8 - ELECTRICAL
INDEX OF DRAWINGS

DRAWING NUMBER	DRAWING TITLE	DRAWING NUMBER	DRAWING TITLE
E-001	SYMBOLS,ABBREVIATIONS,AND GENERAL NOTES		
E-002	ELECTRICAL SITE PLAN		
E-003	LIGHTING AND POWER PLAN		
E-004	SALT SHED DETAILS-1		
E-005	SALT SHED DETAILS-2		
E-006	SALT SHED DETAILS-3		

THE DESIGN APPEARS TO CONFORM TO APPLICABLE CRITERIA. APPROVAL IS NOT TO BE CONSTRUED TO MEAN THAT ALL ASPECTS OF THE DESIGN HAVE BEEN PERSONALLY CHECKED BY THE UNDERSIGNED.

Theodore H. Nezames
2012.09.11 16:18:20 -04'00'

TRANSPORTATION PRINCIPAL ENGINEER

REV.	DATE	REVISION DESCRIPTION	SHEET NO.
-	-	-	-
-	-	-	-
-	-	-	-
-	-	-	-
-	-	-	-
-	-	-	-

THE INFORMATION, INCLUDING ESTIMATED QUANTITIES OF WORK, SHOWN ON THESE SHEETS IS BASED ON LIMITED INVESTIGATIONS BY THE STATE AND IS IN NO WAY WARRANTED TO INDICATE THE CONDITIONS OF ACTUAL QUANTITIES OF WORK WHICH WILL BE REQUIRED.

Plotted Date: 8/15/2012

DESIGNER/DRAFTER: MPW
CHECKED BY: JMK

STATE OF CONNECTICUT
DEPARTMENT OF TRANSPORTATION

Filename: ...\FD_MSH_ELE_092_0549_E000.dgn

SIGNATURE/BLOCK:
OFFICE OF ENGINEERING
APPROVED BY:

PROJECT TITLE: SEA STREET SALT SHED

TOWN: NEW HAVEN

DRAWING TITLE: ELECTRICAL LIST OF DRAWINGS

PROJECT NO. 92-549
DRAWING NO. E-000
SHEET NO. 08.01

SYMBOLS

POWER SYMBOLS

100 AF / 100 AT	MOLDED CASE CIRCUIT BREAKER 100A FRAME RATING 100A TRIP RATING
	GROUND CONNECTION
PPX	120/240V POWER/LIGHTING PANEL (X DENOTES PANEL NO.)
PSS	120/240V SALT SHED PANEL (NEMA 4X ENCLOSURE)
	DUAL GROUND ROD W/CONNECTING GROUND WIRE & CONNECTORS
	DUPLEX RECEPTACLE, 20A, 125V, 24" AFF UNLESS OTHERWISE INDICATED
GFI	GROUND FAULT INTERRUPTER, DUPLEX RECEPTACLE,
	CALCIUM CHLORIDE SYSTEM RECEPTACLE
J	JUNCTION BOX
PB	PULL BOX
	UNDERGROUND GENERAL BRANCH CIRCUIT CONDUIT
	UNDERGROUND COMMUNICATION SERVICE CONDUIT
	UNDERGROUND ELECTRICAL SERVICE CONDUIT
PP1-3	HOMERUN, PP1-3 DENOTES POWER PANEL NO. 1, CIRCUIT #3
	EXISTING UTILITY POLE
	PROPOSED UTILITY POLE
M	METER
	PUSHBUTTON STATION
	DISCONNECT SWITCH, AMPERE RATING AS INDICATED
M 2	MOTOR (NUMBER DENOTES HORSEPOWER) DISCONNECT SWITCH, AMPERE RATING AS INDICATED

LIGHTING SYMBOLS

PC	PHOTOCELL
A PP1-17,19	METAL HALIDE HAZARDOUS LOCATION LIGHT FIXTURE (FIXTURE TYPE, PP1-17,19 DENOTES POWER PANEL NO. 1 CIRCUIT NOS. 17 & 19)
B PP1-2,4	WALL MOUNTED FULL CUT-OFF HIGH PRESSURE SODIUM LIGHT FIXTURE (FIXTURE TYPE, PP1-2,4 DENOTES POWER PANEL NO. 1 CIRCUIT NOS. 2 & 4)
S	SWITCH, SINGLE POLE
S_2	SWITCH, DOUBLE POLE
S_{3a}	SWITCH, 3 WAY, "a" INDICATES SWITCHING CIRCUIT
S_2S_2	2 GANG SWITCH BOX WITH 2 SINGLE POLE SWITCHES
LO LO PP1-9, 11	20' ALUMINUM POLE W/ 2 TENON BRACKETS AND LUMINAIRES. "LO" INDICATES FIXTURE TYPE. "PP1-9,11" INDICATES POWER PANEL NO.1 - CIRCUIT NOS. 9&11.

ABBREVIATIONS

3P	THREE POLE
3PH	THREE PHASE
A	AMPERE
AFF	ABOVE FINISHED FLOOR
AFG	ABOVE FINISHED GRADE
AUTO	AUTOMATIC
AIC	AMPS INTERRUPTING CAPACITY
AWG	AMERICAN WIRING GAUGE
BLDG	BUILDING
BRK	BREAKER
C	CONDUIT
CKT	CIRCUIT
COL	COLUMN
CT	CURRENT TRANSFORMER
CU	COPPER
DISC.	DISCONNECT
DWG	DRAWING
ELEC	ELECTRICAL
FL	FLOOR
GC	GENERAL CONTRACTOR
GFCI	GROUND FAULT CIRCUIT INTERRUPTER
G, GND, GRND	GROUND
HID	HIGH INTENSITY DISCHARGE
HPS	HIGH PRESSURE SODIUM
HT	HEIGHT
HTR	HEATER
HZ	HERTZ
IN	INCH
JB	JUNCTION BOX
kVA	KILOVOLT AMPERE
kW	KILOWATTS
LP	LIGHTING PANEL
MDP	MAIN DISTRIBUTION POWER PANEL
MECH	MECHANICAL
MH	METAL HALIDE
MTG	MOUNTING
NEC	NATIONAL ELECTRICAL CODE
NC	NORMALLY CLOSED
NO	NORMALLY OPEN
PP	POWER PANEL
RGSC	RIGID GALVANIZED STEEL CONDUIT
RM	ROOM
SW	SWITCH
TYP	TYPICAL
UH	ELECTRIC UNIT HEATER
UON	UNLESS OTHERWISE NOTED
V	VOLT
W	WATT OR WIRE
WP	WEATHERPROOF
XFMR	TRANSFORMER

GENERAL NOTES:

1. ALL WORK SHALL BE PERFORMED AS REQUIRED BY APPLICABLE SECTIONS OF NATIONAL ELECTRICAL CODE, LATEST ADOPTED EDITION, AND ALL GOVERNING LOCAL CODES, LAWS AND/OR REGULATIONS.
2. MINIMUM POWER AND LIGHTING CIRCUIT WIRING SIZE SHALL BE #12 AWG COPPER UNLESS OTHERWISE NOTED. CONDUCTOR SIZES SHALL BE ADJUSTED AS NECESSARY TO REFLECT AMPACITY DERATING DUE TO NUMBER OF LOADED CONDUCTORS SHARING A PARTICULAR RACEWAY. MINIMUM CONDUIT SIZE SHALL BE $^3/_4$" AS OUTLINED IN SPECIFICATION SECTION 260533.
3. INTERRUPTING CAPACITY OF ELECTRICAL EQUIPMENT SHALL BE EQUAL TO OR GREATER THAN THE AVAILABLE SHORT-CIRCUIT CURRENT AT ITS SUPPLY TERMINAL.
4. INSTALLER SHALL, IN A WORKMANLIKE MANNER, PROVIDE A COMPLETE OPERABLE SYSTEM.
5. INSTALLER SHALL COORDINATE ALL WORK WITH OTHER DIVISION TRADES, LOCATE FIXTURES, DEVICES, ETC. IN ORDER TO AVOID INTERFERENCE.
6. ALL FEEDER AND BRANCH CIRCUITS SHALL HAVE AN EQUIPMENT GROUND CONDUCTOR INCLUDED WITH PHASE WIRING.
7. EACH BRANCH CIRCUIT SHALL BE EQUIPPED WITH ITS OWN NEUTRAL CONDUCTOR.
8. ALL CONDUIT INSTALLED UNDER PAVED AREAS SHALL BE RIGID GALVANIZED STEEL CONDUIT.
9. ALL CONDUIT INSTALLED IN GRASS AREAS SHALL BE SCHEDULE 40 POLYVINYL CHLORIDE.
10. ALL CONDUITS, RACEWAYS AND BOXES INSTALLED WITHIN THE SALT SHED SHALL BE OF CORROSION RESISTANT TYPE MATERIALS INCLUDING; PVC AND PVC COATED RIGID METAL. CONDUIT ABOVE 10' ELEVATION SHALL BE PVC CONDUIT AND BELOW 10' ELEVATION SHALL BE PVC COATED. ALL MOUNTING HARDWARE IN THE SALT SHED INCLUDING C-CHANNELS SHALL BE STAINLESS STEEL.

REV.	DATE	REVISION DESCRIPTION	SHEET NO.
-	-	-	-
-	-	-	-
-	-	-	-
-	-	-	-
-	-	-	-
-	-	-	-

THE INFORMATION, INCLUDING ESTIMATED QUANTITIES OF WORK, SHOWN ON THESE SHEETS IS BASED ON LIMITED INVESTIGATIONS BY THE STATE AND IS IN NO WAY WARRANTED TO INDICATE THE CONDITIONS OF ACTUAL QUANTITIES OF WORK WHICH WILL BE REQUIRED.

Plotted Date: 8/15/2012

DESIGNER/DRAFTER: SKW
CHECKED BY: JMK
SCALE AS NOTED

STATE OF CONNECTICUT
DEPARTMENT OF TRANSPORTATION

Filename: ...\FD_MSH_ELE_092_0549_E001.dgn

SIGNATURE/BLOCK: OFFICE OF ENGINEERING
APPROVED BY: DATE:

PROJECT TITLE: SEA STREET SALT STORAGE FACILITY

TOWN: NEW HAVEN

DRAWING TITLE: SYMBOLS, ABBREVIATIONS, AND GENERAL NOTES

PROJECT NO. 92-549
DRAWING NO. E-001
SHEET NO. 08.02

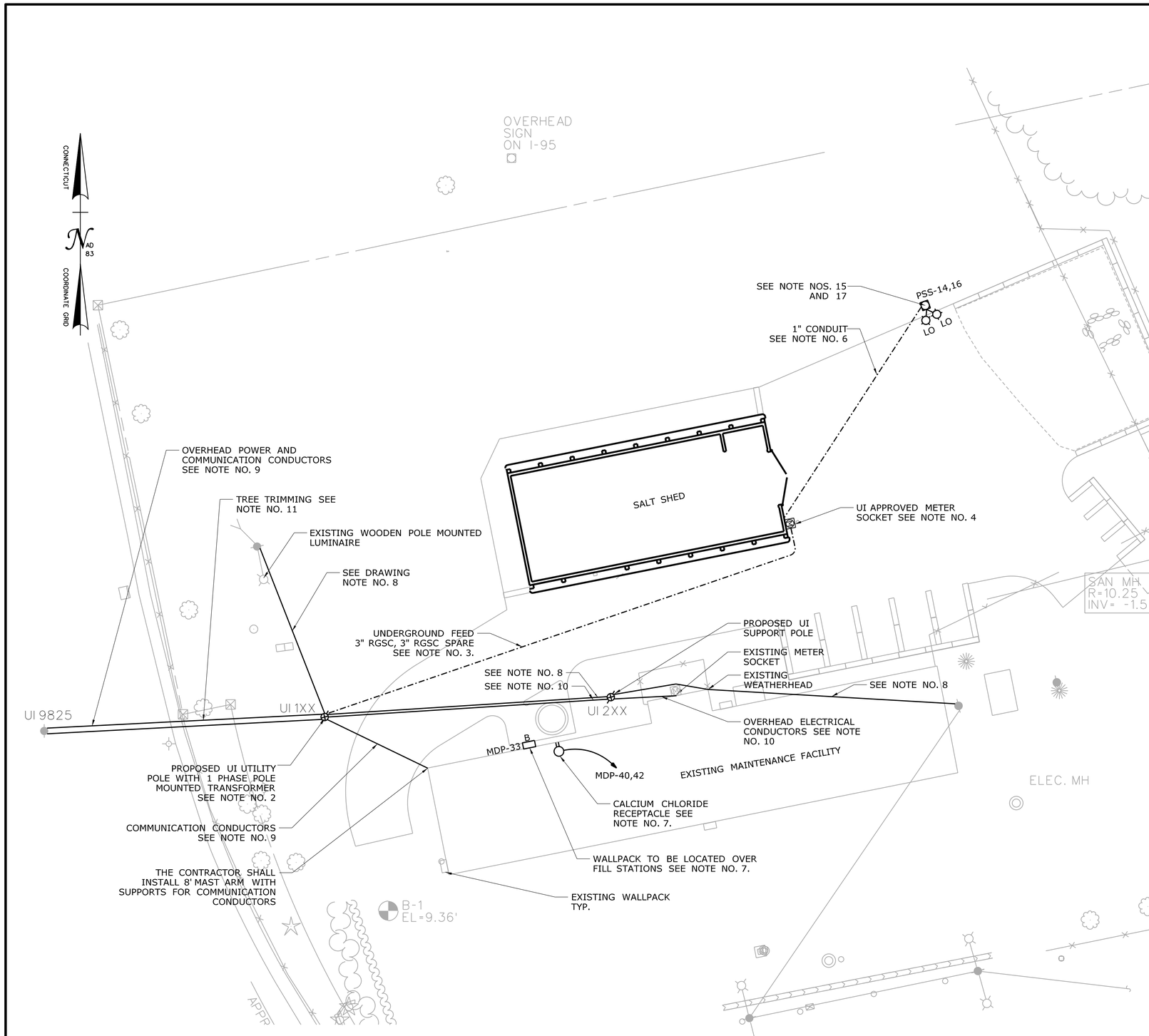

DRAWING NOTES:

1. THE CONTRACTOR SHALL CONTACT UI REPRESENTATIVE TO COORDINATE THE POWER UTILITY'S PORTION OF PROJECT WORK. (CONTACT TO BE GIVEN AT THE PRECONSTRUCTION MEETING). THE CONTRACTOR SHALL GIVE UI A MINIMUM NOTICE OF FOUR WEEKS PRIOR TO REQUIRING THE INITIATION OF ANY WORK TO BE COMPLETED BY THE UTILITY'S FORCES.

2. UI SHALL FURNISH AND INSTALL A NEW POLE WITH TRANSFORMERS RATED TO PROVIDE 200 AMPS 120/240 VOLTS, SINGLE PHASE FOR THE EXISTING MAINTENANCE FACILITY, AND 100 AMPS 120/240 VOLTS, SINGLE PHASE FOR THE SALT SHED POWER. THE CONTRACTOR SHALL FURNISH AND INSTALL ALL UNDERGROUND CONDUITS, PULL WIRE, 90 DEGREES RGSC SWEEPS, THE FIRST 10 FEET LENGTH OF CONDUIT RISER AT THE PROPOSED UI POLE, AND STAND-OFF BRACKETS. THE CONTRACTOR SHALL FURNISH TO UI THE REMAINING RGSC CONDUIT, STAND-OFF BRACKETS, WEATHERHEAD, AND ALL REQUIRED GROUNDING EQUIPMENT. SPARE CONDUIT SHALL BE CAPPED AND SHALL TERMINATE 18 IN. ABOVE GROUND AT PROPOSED UI POLE.

3. THE CONTRACTOR SHALL FURNISH AND INSTALL RGS CONDUIT AND SECONDARY CONDUCTORS FROM THE TRANSFORMER TO THE SALT SHED. THE CONTRACTOR SHALL INSTALL 3" RGS CONDUIT IN TRENCH WITH (3) #1/0 AWG. AND (1) #3 AWG. GROUND AND ONE 3" RGSC SPARE CONDUIT.

4. THE CONTRACTOR SHALL FURNISH AND INSTALL A UI APPROVED METER SOCKET WITH MANUAL DISCONNECT. THE METER SOCKET SHALL BE 100 AMP RATED AND SHALL BE INSTALLED AT 5 FT. AFG. MEASURED TO THE CENTER OF THE METER SOCKET. THE CONTRACTOR SHALL FURNISH AND INSTALL A CONDUIT EXPANSION SLIP -FITTER COUPLING PRIOR TO CONNECTING CONDUIT TO METER SOCKET.

5. THE CONTRACTOR SHALL COORDINATE THE POLE INSTALLATION WITH UI AND AT&T. THE CONTRACTOR SHALL CONTACT AT&T TWO (2) WEEKS PRIOR TO THE INITIATION OF ANY WORK TO BE COMPLETED BY THE UTILITY'S FORCES. THE CONTRACTOR SHALL COORDINATE ANY POWER AND COMMUNICATION SERVICE OUTAGES WITH THE ENGINEER. THE CONTRACTOR SHALL NOT PROCEED WITH INTERRUPTION WITHOUT WRITTEN PERMISSION.

6. THE CONTRACTOR SHALL FURNISH AND INSTALL 1" CONDUIT IN TRENCH WITH (2) #10 AWG. AND (1) #10 AWG. GROUND TO FEED THE SAND PILE LIGHTING.

7. THE CONTRACTOR SHALL FURNISH AND INSTALL WALLPACK FOR THE CALCIUM CHLORIDE SYSTEM. WALLPACK SHALL BE MOUNTED 12.5' AFG. FEED WALLPACK FROM EXISTING WALLPACK CIRCUIT. THE CONTRACTOR SHALL MOUNT THE CALCIUM CHLORIDE PUMP RECEPTACLE 42" AFF. PROVIDE $^{3}/_{4}$"C FOR THE SERVICE. SEE CALCIUM CHLORIDE DISPENSING SYSTEM DETAIL ON DRAWING NO. C-005.

8. THE CONTRACTOR SHALL FURNISH AND INSTALL OVERHEAD CONDUCTORS 2-#10,#10 GND WITH MESSENGER FOR AERIAL FEED FROM EXISTING POLE MOUNTED LIGHT FIXTURE TO PROPOSED UI POLE. THE CONTRACTOR SHALL FURNISH AND INSTALL OVERHEAD CONDUCTORS 2-#10,#10 GND WITH MESSENGER FOR AERIAL FEED FROM PROPOSED UI POLE TO EXISTING WEATHERHEAD MOUNTED ON THE EXISTING BUILDING. THE CONTRACTOR SHALL MAINTAIN A 18' AFG CLEARANCE FOR THE OVERHEAD CONDUCTORS.

9. UI IS RESPONSIBLE FOR THE INSTALLATION OF PRIMARY CONDUCTORS. AT&T IS RESPONSIBLE FOR THE INSTALLATION OF COMMUNICATION ENTRANCE CONDUCTORS. COORDINATE THE INSTALLATION WITH THE UTILITIES.

10. UI IS RESPONSIBLE FOR FURNISHING AND INSTALLING OVERHEAD SERVICE CONDUCTORS FROM THE PROPOSED UTILITY POLE TO THE EXISTING METER SOCKET.

11. THE CONTRACTOR SHALL BE RESPONSIBLE FOR THE REMOVAL OF BRANCHES THAT ARE IN THE RIGHT OF WAY OF THE ELECTRICAL CONDUCTORS. THE CONTRACTOR SHALL COORDINATE TREE TRIMMING WITH UI AND THE ENGINEER.

12. ALL CONDUIT PENETRATION THROUGH SALT SHED WALLS SHALL BE IN ACCORDANCE WITH DETAIL NO. 4 PROVIDED ON DRAWING NO. E-004.

13. THE CONTRACTOR SHALL FURNISH AND INSTALL CONDUITS, CONDUCTORS, PULL WIRES, WARNING TAPE AND ALL TRENCHING AND BACKFILLING ASSOCIATED WITH THE INSTALLATION OF ALL UNDERGROUND CONDUITS AS CALLED FOR ON THE PLANS AND IN ACCORDANCE WITH THE CONDUIT INSTALLATION DETAIL NO. 2 PROVIDED ON DRAWING NO. E-004. THE CONTRACTOR SHALL PROVIDE CONTINUOUS NYLON PULL ROPE IN ALL SPARE UNDERGROUND CONDUITS WITH NO KNOTS OR SPLICES.

14. EXCAVATION OF ANY TYPE SHALL BE ACCOMPLISHED SO THAT THE EXISTING UNDERGROUND UTILITIES OR STRUCTURES ARE NOT DAMAGED. IT SHALL BE THE CONTRACTOR'S RESPONSIBILITY FOR ANY DAMAGE COSTS RELATED TO THE REPAIR OF DAMAGED UTILITIES. ANY REPAIRS SHALL BE BORNE BY THE CONTRACTOR AT NO ADDITIONAL COST TO THE STATE. THE CONTRACTOR MUST ANTICIPATE POTENTIAL DELAYS CAUSED BY UTILITY WORK AND SCHEDULE THE CONSTRUCTION ACCORDINGLY. CONTRACTOR SHALL CONTACT "CALL BEFORE YOU DIG" PRIOR TO CONSTRUCTION AND BEFORE ANY EXCAVATION TAKES PLACE.

15. INSTALL CENTER OF LUMINAIRE FOUNDATION THREE FEET FROM BACK EDGE OF CURBING OR EDGE OF PAVEMENT. SET FOUNDATION SO THAT TOP SURFACE OF FOUNDATION REMAINS 1 IN. ABOVE THE SURROUNDING FINISH GRADE.

16. LUMINAIRE POLE SHALL BE BONDED BETWEEN BONDING LUG PROVIDED AT THE BASE OF POLE AND GROUNDING ELECTRODE INSTALLED THROUGH EACH LUMINAIRE FOUNDATION. REFER TO DETAIL NO. 4 ON DRAWING NO. E-005.

17. CONTRACTOR SHALL CONTACT DOT SALT SHED SUPERVISOR TO COORDINATE THE AIMING OF THE LIGHT FIXTURES FOR THE SAND PILE. AIMING SHALL BE PERFORMED IN THE EVENING IN THE DARK. FIXTURES SHALL BE AIMED TO COVER THE INTENDED WORK AREA WHILE MINIMIZING LIGHT TRESPASSING INTO ROADWAYS.

18. INSTALL PHOTOELECTRIC CONTROL FOR SITE LIGHTING. THE CONTRACTOR SHALL INSTALL TWO (2) POSITION CONTROL (AUTO AND MANUAL) IN THE SALT SHED. ATTACH PHOTO EYE WITHOUT PENETRATING THROUGH THE ROOF. REFER TO DETAIL NO. 3 ON DRAWING NO. E-003 FOR FURTHER INSTALLATION INFORMATION.

19. ALL CONDUIT INSTALLED WITHIN THE SALT SHED SHALL BE PVC OR PVC COATED TYPE CONDUIT. CONDUIT ABOVE 10 FEET ELEVATION SHALL BE PVC AND CONDUIT BELOW 10 FEET ELEVATION SHALL BE PVC COATED. ALL HARDWARE AND C- CHANNELS SHALL BE STAINLESS STEEL.

20. ALL SALT SHED RACEWAYS, JUNCTION BOXES, AND ENCLOSURES SHALL BE NEMA RATED FOR CORROSION RESISTANCE.

REV.	DATE	REVISION DESCRIPTION	SHEET NO.
-	-	-	-
-	-	-	-
-	-	-	-
-	-	-	-
-	-	-	-
-	-	-	-

THE INFORMATION, INCLUDING ESTIMATED QUANTITIES OF WORK, SHOWN ON THESE SHEETS IS BASED ON LIMITED INVESTIGATIONS BY THE STATE AND IS IN NO WAY WARRANTED TO INDICATE THE CONDITIONS OF ACTUAL QUANTITIES OF WORK WHICH WILL BE REQUIRED.

Plotted Date: 8/15/2012

DESIGNER/DRAFTER: **SKW**

CHECKED BY: **JMK**

SCALE IN FEET 0 20 40

SCALE 1"=20'

STATE OF CONNECTICUT
DEPARTMENT OF TRANSPORTATION

Filename: ...\FD_MSH_ELE_092_0549_E002.dgn

SIGNATURE/ BLOCK:

OFFICE OF ENGINEERING

APPROVED BY: DATE:

PROJECT TITLE:

SEA STREET
SALT STORAGE FACILITY

TOWN: **NEW HAVEN**

DRAWING TITLE: **ELECTRICAL SITE PLAN**

PROJECT NO. **92-549**

DRAWING NO. **E-002**

SHEET NO. **08.03**

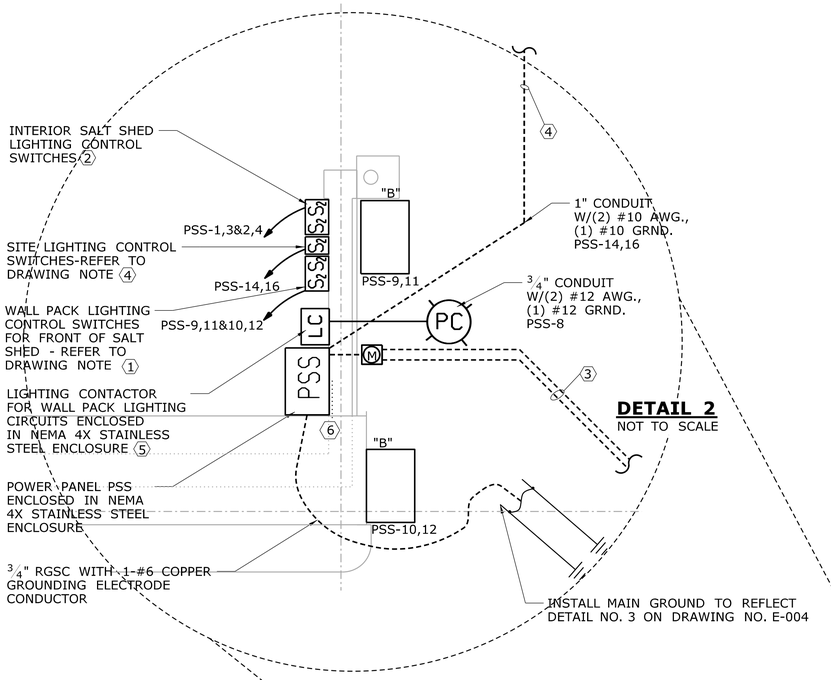

DETAIL 2
NOT TO SCALE

DRAWING NOTES:

1. PROVIDE TWO (2) GANG SWITCHBOX AND TWO (2) POLE SWITCHES TO CONTROL WALLPACK LIGHTING CIRCUITS. FEED AND CONTROL INNER WALLPACKS SEPARATE FROM THE OUTER WALLPACKS. SUBJECT SWITCHES SHALL CONTROL THE WALLPACK FIXTURES WHEN THE LIGHTING CONTACTOR IS IN THE "HAND" POSITION.
2. CONTROL OVERHEAD INDOOR LIGHTING WITH TWO (2) GANG SWITCHBOX WITH TWO (2) POLE SWITCH CONTROL. TWO (2) SEPARATE CIRCUITS SHALL FEED AND CONTROL ALTERNATING SEQUENCE OF FIXTURES.
3. FEED FROM PROPOSED UI POLE TO METER SOCKET AND PANEL PSS: 3" RGSC CONDUIT WITH 3 - #1/0 AWG. CONDUCTORS AND 1 - #3 GROUND. INCLUDE SPARE.
4. SAND PILE LIGHTING FEED 1" RGSC WITH 2 #10 AWG. CONDUCTORS AND 1-#10 GND.
5. INSTALL TWO (2) POSITION LIGHTING CONTACTOR (WITH "HAND" AND "AUTO" POSITIONS) TO CONTROL WALLPACKS.
6. ELECTRICAL PANEL SHALL BE CONNECTED TO GROUNDING ELECTRODE SYSTEM.

GENERAL NOTES:

1. REFER TO DRAWING NO. E-002 FOR THE ELECTRICAL SITE PLAN.
2. ALL EQUIPMENT, CONDUITS AND FITTINGS SHALL BE PROPERLY GROUNDED PER NEC.
3. ALL ENCLOSURES AND BOXES IN SALT SHED SHALL BE NEMA 4X RATED, SUITABLE FOR CORROSIVE CONDITIONS PANEL ENCLOSURE AND LIGHTING CONTACTOR SHALL BE STAINLESS STEEL.
4. PROVIDE APPROPRIATE SLEEVE AND GROUT WHERE CONDUIT PENETRATES A WALL OR FLOOR. SEE "WALL PENETRATION DETAIL NO. 4 ON DRAWING NO. E-004.
5. ALL CONDUCTORS SHALL BE STRANDED COPPER WITH THWN INSULATION SUITABLE FOR USE IN WET LOCATIONS. MINIMUM CONDUCTORS SIZE SHALL BE #12 AWG, UNLESS OTHERWISE NOTED.
6. PVC WEATHERPROOF COVERS SHALL BE PROVIDED FOR ALL SWITCHES IN THE SALT SHED. TWO GANG SWITCHES (CARLON E9G2SSN OR APPROVED EQUAL) AND SINGLE SWITCHES (CARLON E98TSCN-CAR OR APPROVED EQUAL).
7. GFI RECEPTACLE SHALL HAVE PILOT LIGHT (LEVITON #7899I OR APPROVED EQUAL) AND COVER (LEVITON #5977-CL OR APPROVED EQUAL).
8. REFER TO DRAWING NO. E-005 FOR SALT SHED LIGHTING FIXTURE SCHEDULE. REFER TO DRAWING NO. E-006 FOR POWER PANEL SCHEDULE.
9. LABEL ALL LIGHT SWITCHES WITH FIXTURE CONTROL DESIGNATIONS.

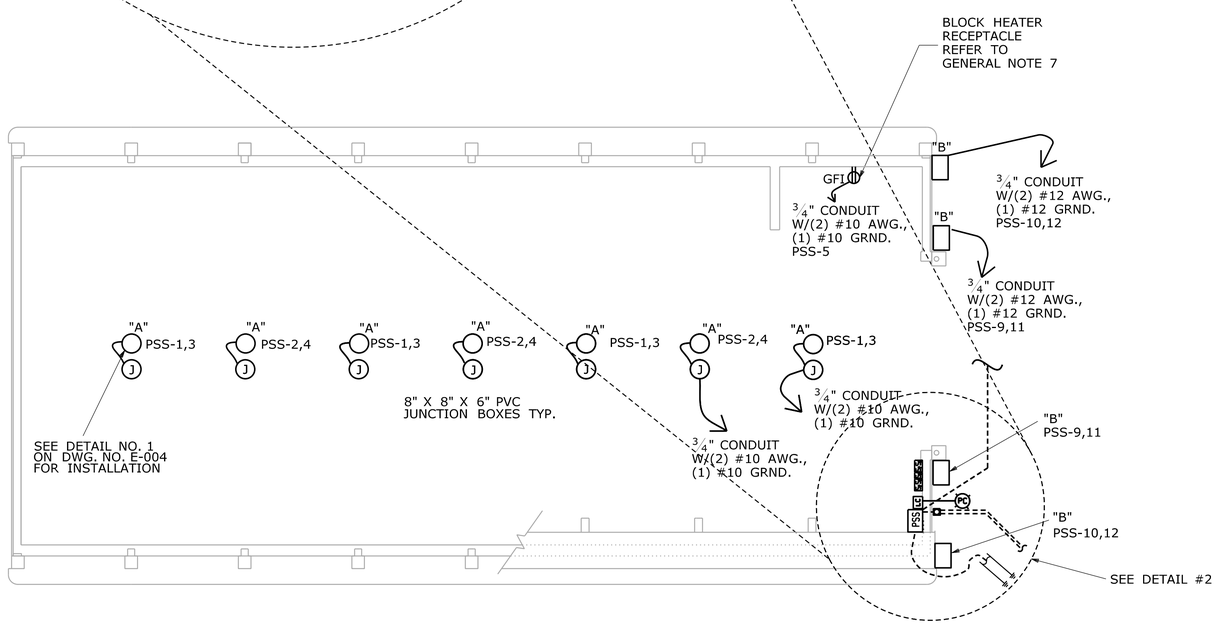

DETAIL 1- SALT SHED ELECTRICAL PLAN

SCALE: 1/8" = 1'-0"

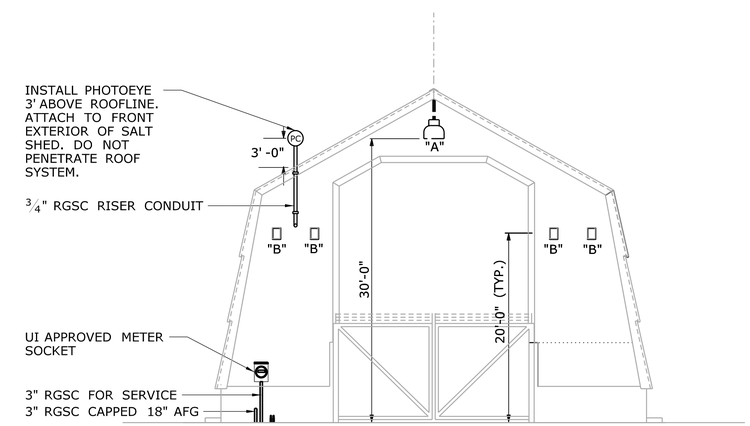

DETAIL 3 - SALT SHED ELECTRICAL ELEV. (FRONT)

SCALE: 1/8" = 1'-0"

REV.	DATE	REVISION DESCRIPTION	SHEET NO.
-	-	-	-
-	-	-	-
-	-	-	-
-	-	-	-
-	-	-	-
-	-	-	-

THE INFORMATION, INCLUDING ESTIMATED QUANTITIES OF WORK, SHOWN ON THESE SHEETS IS BASED ON LIMITED INVESTIGATIONS BY THE STATE AND IS IN NO WAY WARRANTED TO INDICATE THE CONDITIONS OF ACTUAL QUANTITIES OF WORK WHICH WILL BE REQUIRED.

Plotted Date: 8/15/2012

DESIGNER/DRAFTER: SKW
CHECKED BY: JMK
SCALE AS NOTED

STATE OF CONNECTICUT
DEPARTMENT OF TRANSPORTATION

Filename: ...\FD_MSH_ELE_092_0549_E003.dgn

SIGNATURE/BLOCK:
OFFICE OF ENGINEERING
APPROVED BY: DATE:

PROJECT TITLE:
SEA STREET
SALT STORAGE FACILITY

TOWN: NEW HAVEN

DRAWING TITLE:
LIGHTING AND POWER PLAN

PROJECT NO. 92-549
DRAWING NO. E-003
SHEET NO. 08.04

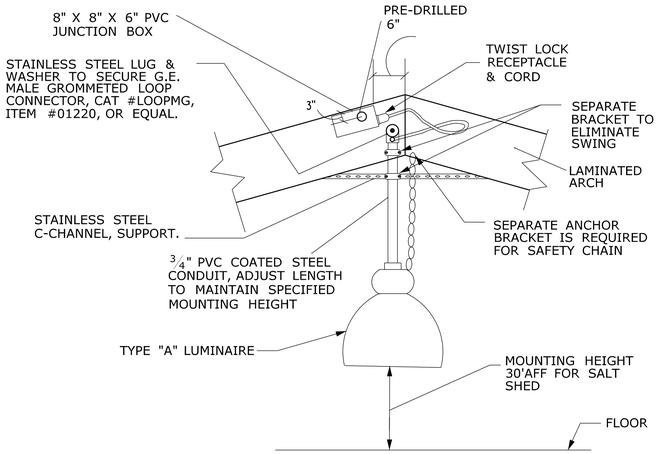

TYPICAL INDOOR HID LIGHTING FIXTURE MOUNTING DETAIL NO. 1

NOT TO SCALE

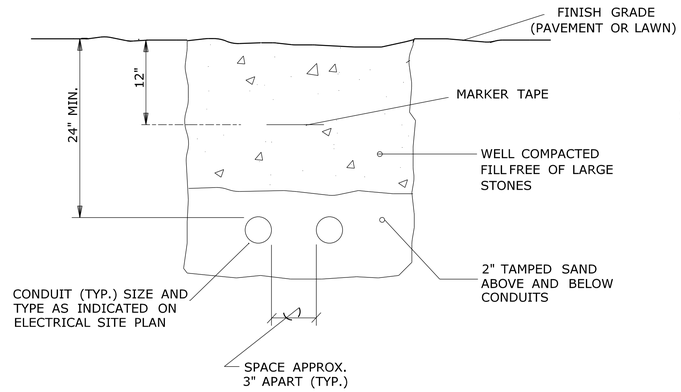

CONDUIT INSTALLATION DETAIL NO. 2

NOT TO SCALE

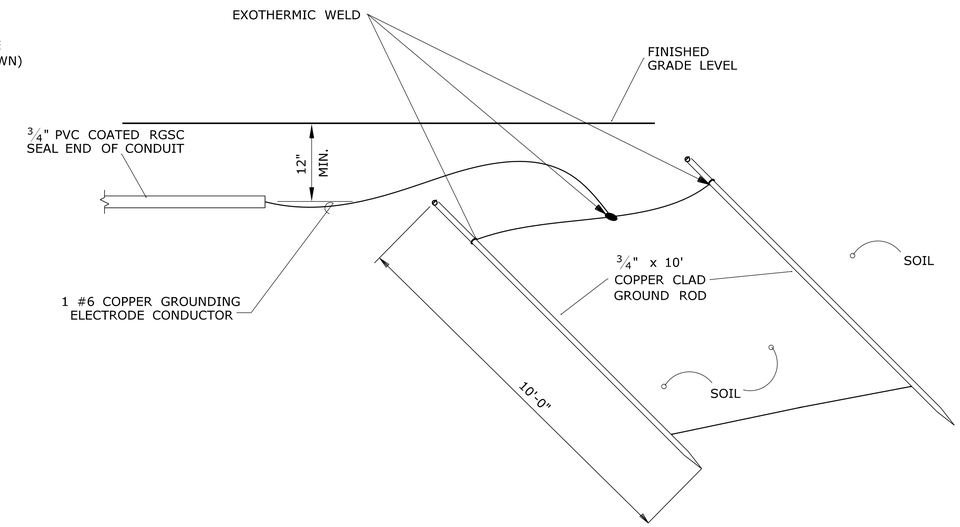

GROUNDING ELECTRODE DETAIL NO. 3

NOT TO SCALE

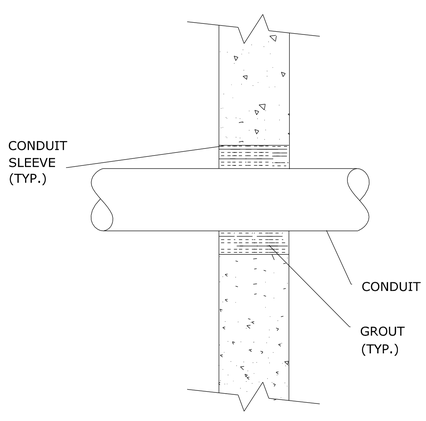

WALL PENETRATION DETAIL NO. 4

NOT TO SCALE

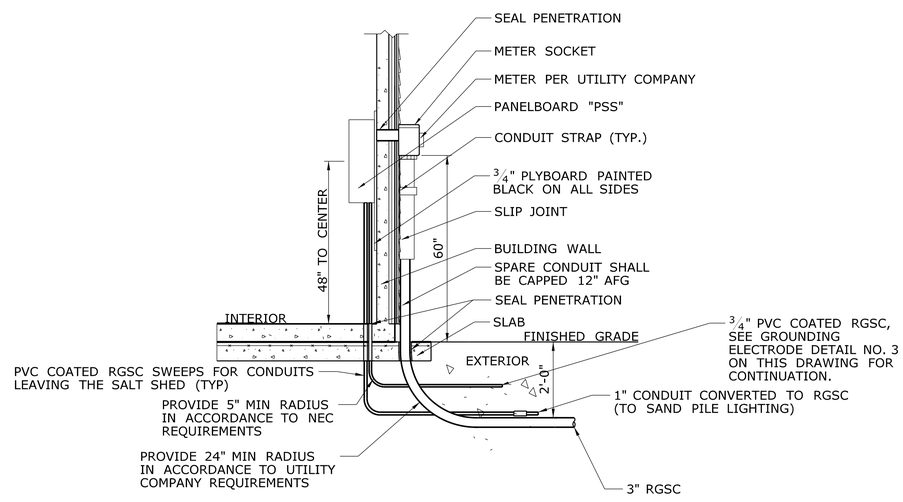

NOTE:
REFER TO STRUCTURAL SLAB PLAN FOR SLAB PENETRATION LOCATIONS.

SERVICE CONDUIT STUB-UP DETAIL NO. 5

NOT TO SCALE

REV.	DATE	REVISION DESCRIPTION	SHEET NO.
-	-	-	-
-	-	-	-
-	-	-	-
-	-	-	-
-	-	-	-
-	-	-	-

THE INFORMATION, INCLUDING ESTIMATED QUANTITIES OF WORK, SHOWN ON THESE SHEETS IS BASED ON LIMITED INVESTIGATIONS BY THE STATE AND IS IN NO WAY WARRANTED TO INDICATE THE CONDITIONS OF ACTUAL QUANTITIES OF WORK WHICH WILL BE REQUIRED.

Plotted Date: 8/15/2012

DESIGNER/DRAFTER: SKW
CHECKED BY: JMK
SCALE AS NOTED

STATE OF CONNECTICUT
DEPARTMENT OF TRANSPORTATION

Filename: ...\FD_MSH_ELE_092_0549_E004.dgn

SIGNATURE/BLOCK:
OFFICE OF ENGINEERING
APPROVED BY: DATE:

PROJECT TITLE:
SEA STREET
SALT STORAGE FACILITY

TOWN: NEW HAVEN

DRAWING TITLE: SALT SHED DETAILS-1

PROJECT NO. 92-549
DRAWING NO. E-004
SHEET NO. 08.05

NAME	DESCRIPTION	VOLTS	LAMP		MOUNTING	BASIS OF DESIGN: MANUFACTURER & CATALOG NUMBER
			No.	TYPE		
A	MARINE OUTSIDE LUMINAIRE, 400W MH, PULSE START, PENDANT MTD.,DOUBLE FUSE, WITH SAFETY CHAIN ASSEMBLY & 3' CORD PRISMATIC CLOSED BOTTOM GLASS CORROSION RESISTANT.	240V	1	MS400/BU/PS	PENDANT	HOLOPHANE #PETL40LPM-24-635-PD PETLF2FUS5D 09189-3
B	150W HPS FULL CUTOFF WALL-PACK LUMINAIRE WITH DIE-CAST ALUMINUM HOUSING PAINTED WITH POLYESTER POWDER COAT FINISH COLOR: BRONZE. THE OPTICAL ASSEMBLY SHALL BE GLASS REFRACTOR.	240V	1	LU150/55	WALL	HUBBELL #LMC-150S-8-1-LP
L0	HEAVY DUTY LUMINAIRE, 250W HIGH PRESSURE SODIUM WET LOCATION, SPOT DISTRIBUTION, ENERGY SAVINGS COLOR: BRONZE, TOP VISOR KNUCKLE FITTING (INSTALL SHIELDS AS REQUIRED)	240V	2	LU250/ECO	POLE	HOLOPHANE PF-25LHP-24-K-S-1-B-C PF2FUS5C S-67578
POLE LO	20' ROUND TAPERED ALUMINUM POLE WITH TRANSFORMER BASE, BRONZE FINISH, TWIN FIXTURE BRACKET	---	---	---	---	HOLOPHANE RTA2060 G PL ND BZ-TB-70510PX-AB-26-4 RFD892926

LIGHT FIXTURE SCHEDULE
DETAIL NO. 1

NOT TO SCALE

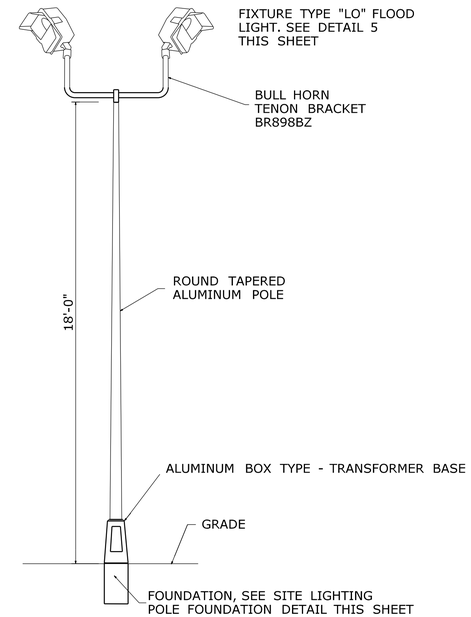

SITE LIGHTING FIXTURE -TYPE "LO" WITH 2 FIXTURE BULL HORN BRACKET
DETAIL NO. 3

NOT TO SCALE

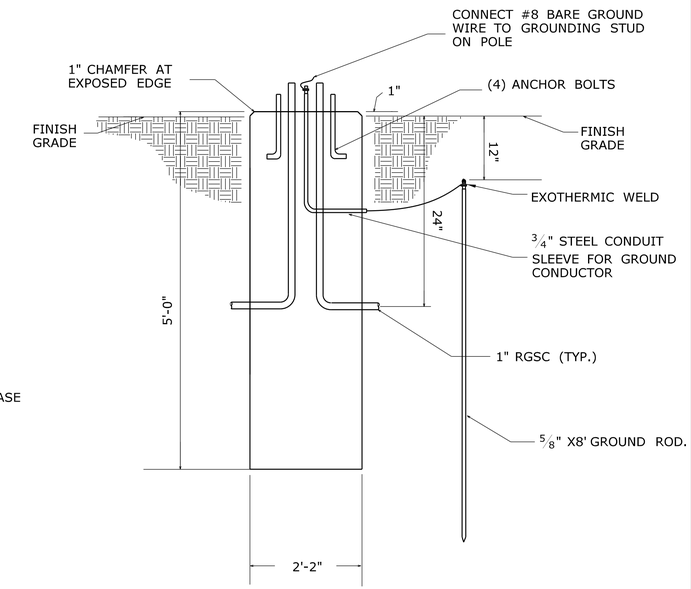

SITE LIGHTING POLE FOUNDATION FRONT VIEW - DETAIL NO. 4

NOT TO SCALE

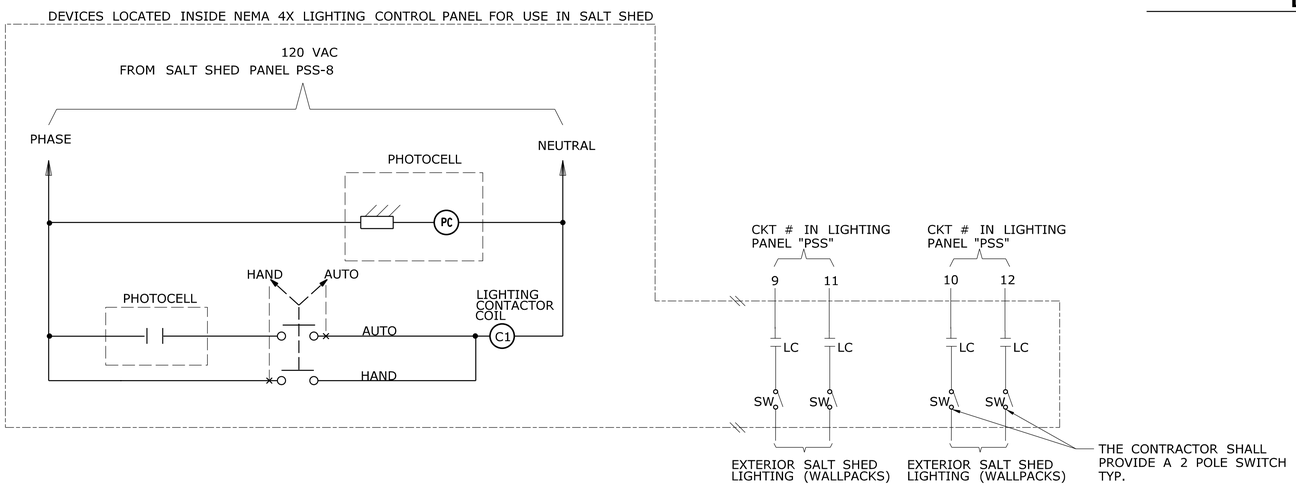

OUTDOOR LIGHTING-CONTROL DIAGRAM SALT SHED
DETAIL NO. 2

NOT TO SCALE

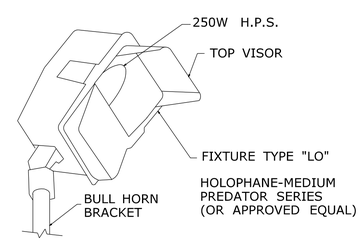

FIXTURE TYPE "LO" FLOOD LIGHT - DETAIL NO. 5

NOT TO SCALE

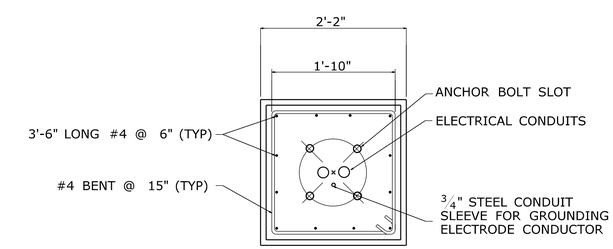

NOTE: FACTORY SUPPLIED TEMPLATES MUST BE USED WHEN SETTING ANCHOR BOLTS, FIELD VERIFY DIMENSIONS BEFORE CONSTRUCTION.

SITE LIGHTING POLE BASE PLATE FOR "LO" LIGHT FIXTURES
DETAIL NO. 6

NOT TO SCALE

REV.	DATE	REVISION DESCRIPTION	SHEET NO.
-	-	-	-
-	-	-	-
-	-	-	-
-	-	-	-
-	-	-	-
-	-	-	-

THE INFORMATION, INCLUDING ESTIMATED QUANTITIES OF WORK, SHOWN ON THESE SHEETS IS BASED ON LIMITED INVESTIGATIONS BY THE STATE AND IS IN NO WAY WARRANTED TO INDICATE THE CONDITIONS OF ACTUAL QUANTITIES OF WORK WHICH WILL BE REQUIRED.

Plotted Date: 8/15/2012

DESIGNER/DRAFTER: SKW
CHECKED BY: JMK
SCALE AS NOTED

STATE OF CONNECTICUT
DEPARTMENT OF TRANSPORTATION

Filename: ...\FD_MSH_ELE_092_0549_E005.dgn

SIGNATURE/BLOCK: OFFICE OF ENGINEERING
APPROVED BY: DATE:

PROJECT TITLE: SEA STREET SALT STORAGE FACILITY

TOWN: NEW HAVEN

DRAWING TITLE: SALT SHED DETAILS-2

PROJECT NO. 92-549
DRAWING NO. E-005
SHEET NO. 08.06

SALT SHED POWER PANEL "PSS"

CKT. NO.	DIRECTORY	LOAD (VA) LA		LB	TRIP (A)	MAIN BREAKER 60 Amps	TRIP (A)	LOAD (VA) LA		LB	DIRECTORY	CKT. NO.
1	SS INTERIOR LIGHTING	890			20		20	668			SS INTERIOR LIGHTING	2
3				890						668		4
5	BLOCK HEATER	1500			20		20				SPARE	6
7	SPARE				20		20			200	CONTACTOR	8
9	EXTERIOR WALL PACKS	188			20		20	188			EXTERIOR WALL PACKS	10
11				188						188		12
13	SPARE				20		20	312			WORK AREA LIGHTING	14
15	SPARE				20					312		16
17	SPARE				20		20				SPARE	18

A		B	
3.75		2.45	KVA
31.2		20.4	AMPS
6.192			TOTAL LOAD IN KVA

SERVICE CHARACTERISTICS

18-CIRCUIT PANEL
120 / 240 V, 1 PH., 3 WIRE, SOLID NEUTRAL
60 CYCLE, WITH GROUND BUS
100 AMP MAIN BUS
60 AMP MAIN
22 KAIC MIN.
SURFACE MOUNTING

ENCLOSURE : NEMA 4X STAINLESS STEEL
LOCATION: SALT SHED INTERIOR
BRANCH CIRCUITS SHALL BE RATED FOR 22 KIC

PANEL SCHEDULE

NOT TO SCALE

NOTE:

1. THE CONTRACTOR SHALL SUPPLY AND INSTALL SINGLE PHASE PANELBOARD GE # INTERIOR AQF1181CT AXB7 BOX- AB254S OR APPROVED EQUAL.
2. BRANCH CIRCUITS SHALL BE RATED FOR 22 KIC.

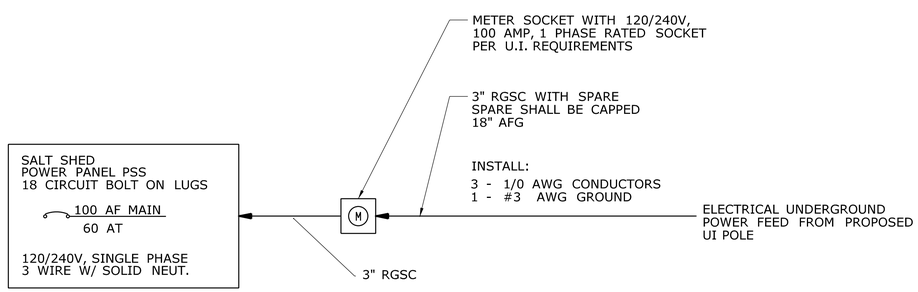

ONE LINE DIAGRAM

NOT TO SCALE

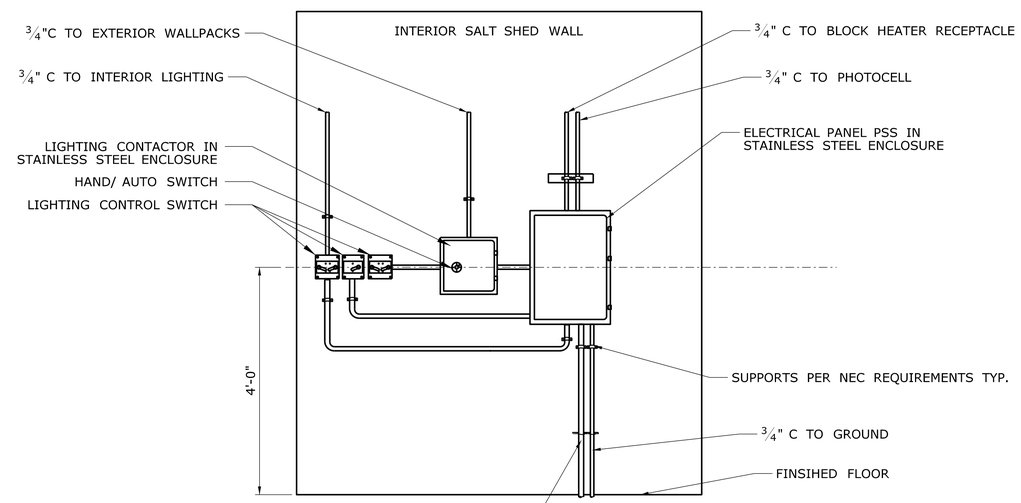

CONDUIT ROUTING IS DIAGRAMMATIC ONLY. CONTRACTOR SHALL ROUTE CONDUIT PER FIELD CONDITIONS.

ELEVATION PLAN

SCALE: 3/4" = 1'-0"

REV.	DATE	REVISION DESCRIPTION	SHEET NO.
-	-	-	-
-	-	-	-
-	-	-	-
-	-	-	-
-	-	-	-
-	-	-	-

THE INFORMATION, INCLUDING ESTIMATED QUANTITIES OF WORK, SHOWN ON THESE SHEETS IS BASED ON LIMITED INVESTIGATIONS BY THE STATE AND IS IN NO WAY WARRANTED TO INDICATE THE CONDITIONS OF ACTUAL QUANTITIES OF WORK WHICH WILL BE REQUIRED.

Plotted Date: 8/15/2012

DESIGNER/DRAFTER: SKW
CHECKED BY: JMK
SCALE AS NOTED

STATE OF CONNECTICUT
DEPARTMENT OF TRANSPORTATION

Filename: ...\FD_MSH_ELE_092_0549_E006.dgn

SIGNATURE/ BLOCK:
OFFICE OF ENGINEERING
APPROVED BY: DATE:

PROJECT TITLE:
SEA STREET
SALT STORAGE FACILITY

TOWN: NEW HAVEN

DRAWING TITLE: SALT SHED DETAILS-3

PROJECT NO. 92-549
DRAWING NO. E-006
SHEET NO. 08.07