07 - SALT SHED
INDEX OF DRAWINGS

DRAWING NUMBER	DRAWING TITLE	DRAWING NUMBER	DRAWING TITLE
SS-001	CIVIL GRADING PLAN & MISC. DETAILS		
SS-002	FLOOR PLANS AND ELEVATIONS		
SS-003	ARCHITECTURAL SECTIONS AND DETAILS		
SS-004	MISCELLANEOUS DETAILS		
SS-005	FOUNDATION PLAN & GENERAL NOTES		
SS-006	STRUCTURAL FOUNDATION DETAILS		
SS-007	STRUCTURAL ROOF FRAMING PLAN		
SS-008	SECTIONS AND DETAILS		

THE DESIGN APPEARS TO CONFORM TO APPLICABLE CRITERIA. APPROVAL IS NOT TO BE CONSTRUED TO MEAN THAT ALL ASPECTS OF THE DESIGN HAVE BEEN PERSONALLY CHECKED BY THE UNDERSIGNED.

Theodore H. Nezames
2012.09.11 16:44:26 -04'00'

TRANSPORTATION PRINCIPAL ENGINEER

REV.	DATE	REVISION DESCRIPTION	SHEET NO.
-	-	-	-
-	-	-	-
-	-	-	-
-	-	-	-
-	-	-	-
-	-	-	-

THE INFORMATION, INCLUDING ESTIMATED QUANTITIES OF WORK, SHOWN ON THESE SHEETS IS BASED ON LIMITED INVESTIGATIONS BY THE STATE AND IS IN NO WAY WARRANTED TO INDICATE THE CONDITIONS OF ACTUAL QUANTITIES OF WORK WHICH WILL BE REQUIRED.

Plotted Date: 8/28/2012

DESIGNER/DRAFTER:

CHECKED BY:

SCALE AS NOTED

STATE OF CONNECTICUT
DEPARTMENT OF TRANSPORTATION

Filename: ...\FD_MSH_SS_092_0549_SS000.dgn

SIGNATURE/ BLOCK:

OFFICE OF ENGINEERING

APPROVED BY:

PROJECT TITLE:

SEA STREET
SALT STORAGE FACILITY

TOWN: NEW HAVEN

DRAWING TITLE: SALT SHED LIST OF DRAWINGS

PROJECT NO. 92-549

DRAWING NO. SS-000

SHEET NO. 07.01

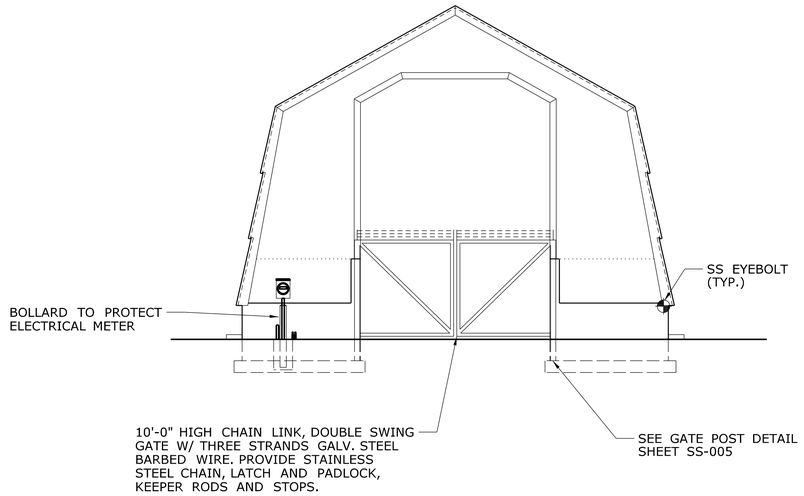

SALT SHED FRONT ELEVATION

SCALE: 1/8" = 1'-0"

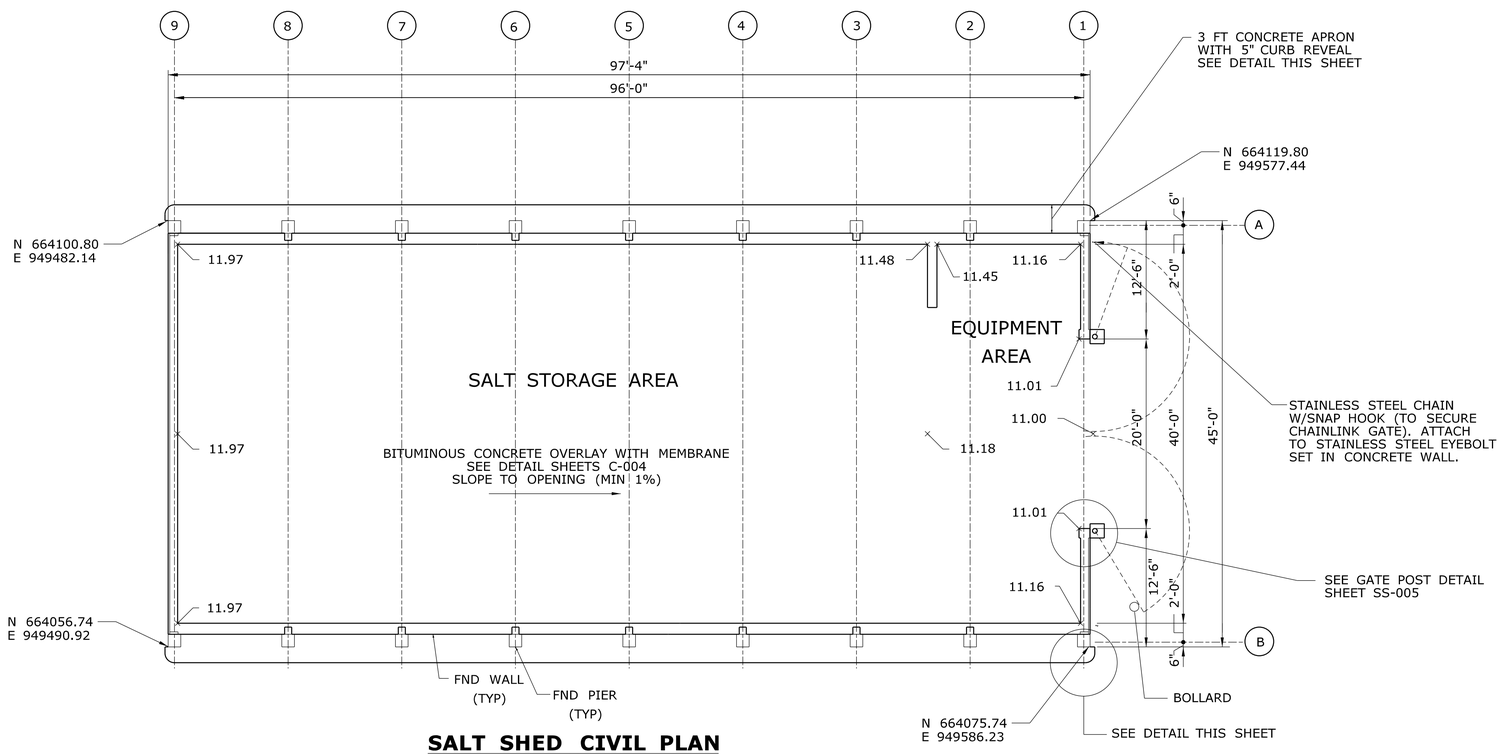

SALT SHED CIVIL PLAN

SCALE: 1/8" = 1'-0"

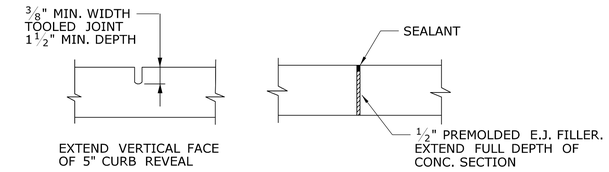

PLACE CONTRACTION JOINTS AT 6' O.C. BEGINNING AT ℄ OF PIER. EXPANSION JOINTS SHALL BE LOCATED 12' (MIN.) FROM CORNER PIERS AND HAVE A MAX. SPACING OF 36' O.C..

CONTRACTION JOINT **EXPANSION JOINT**

CONTROL JOINTS

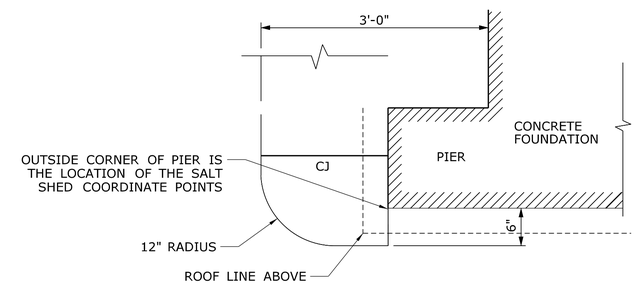

TYPICAL APRON PLAN AT CORNER

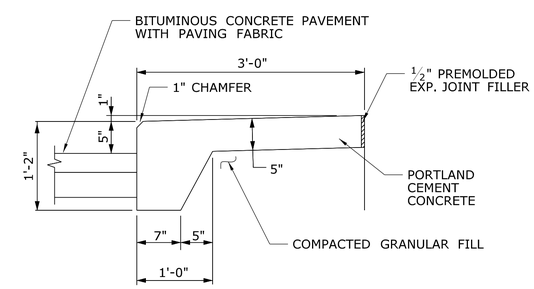

TYPICAL APRON SECTION

CONCRETE APRON DETAILS

NOT TO SCALE

REV.	DATE	REVISION DESCRIPTION	SHEET NO.
-	-	-	-
-	-	-	-
-	-	-	-
-	-	-	-
-	-	-	-
-	-	-	-

THE INFORMATION, INCLUDING ESTIMATED QUANTITIES OF WORK, SHOWN ON THESE SHEETS IS BASED ON LIMITED INVESTIGATIONS BY THE STATE AND IS IN NO WAY WARRANTED TO INDICATE THE CONDITIONS OF ACTUAL QUANTITIES OF WORK WHICH WILL BE REQUIRED.

Plotted Date: 8/24/2012

DESIGNER/DRAFTER: SLM
CHECKED BY: LM
SCALE AS NOTED

STATE OF CONNECTICUT
DEPARTMENT OF TRANSPORTATION

Filename: ...\FD_MSH_SS_0092_549_SS001.dgn

SIGNATURE/BLOCK: OFFICE OF ENGINEERING
APPROVED BY: DATE:

PROJECT TITLE: SEA STREET SALT STORAGE FACILITY

TOWN: NEW HAVEN

DRAWING TITLE: CIVIL GRADING PLAN & MISC. DETAILS

PROJECT NO. 92-549
DRAWING NO. SS-001
SHEET NO. 07.02

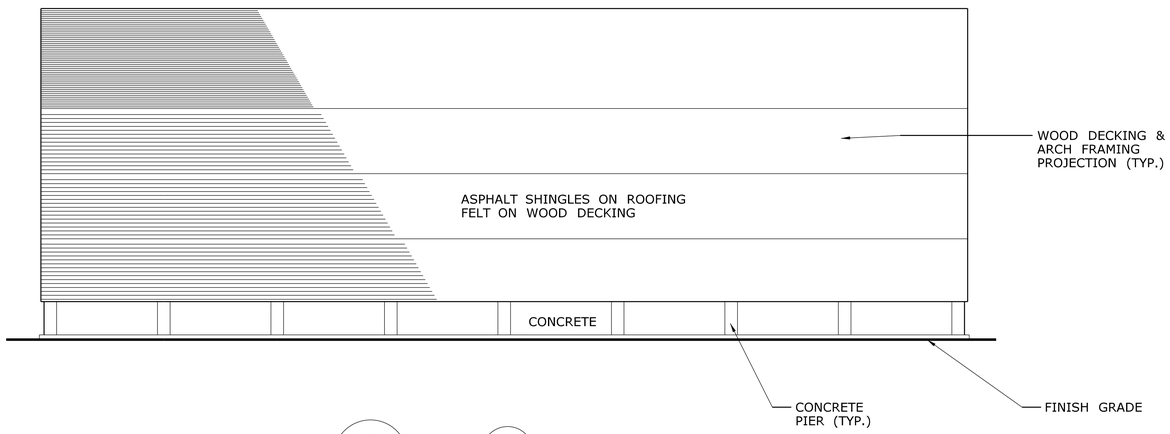

NORTH/SOUTH ELEVATION 3 / SS-002
SCALE: 1/8" = 1'-0"

3 / SS-002 SIM. OPP.

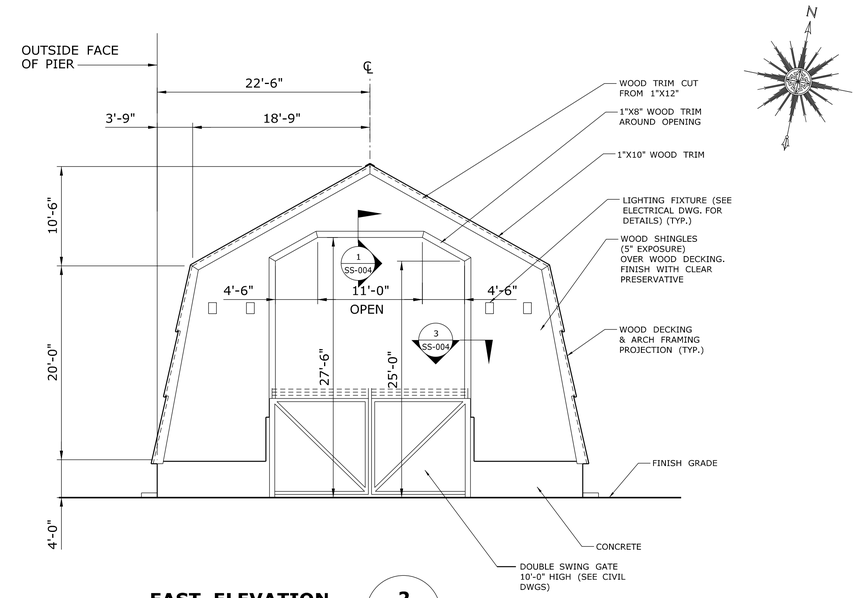

EAST ELEVATION 2 / SS-002
SCALE: 1/8" = 1'-0"

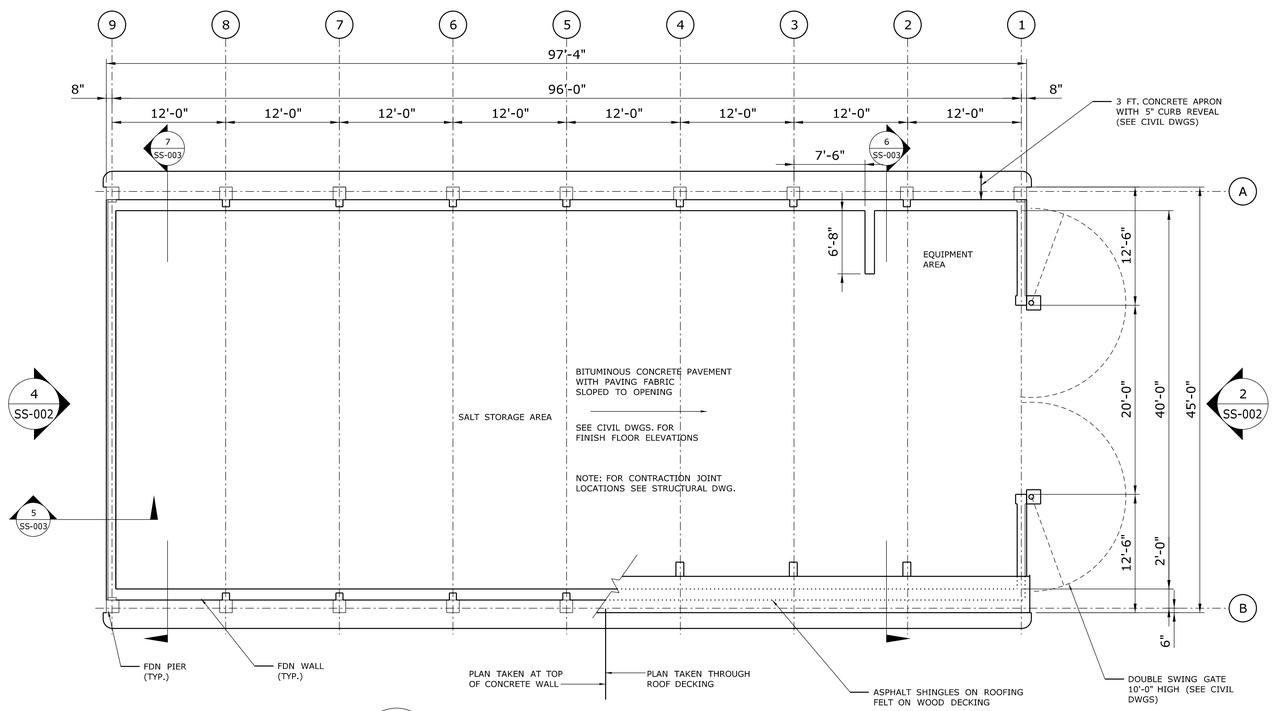

SALT SHED PLAN 1 / SS-002
SCALE: 1/8" = 1'-0"

3 / SS-002

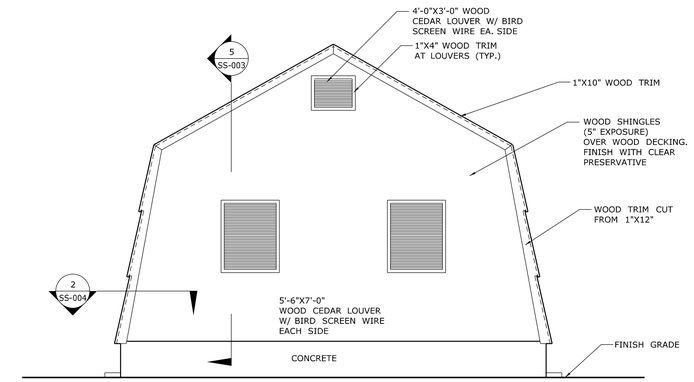

WEST ELEVATION 4 / SS-002
SCALE: 1/8" = 1'-0"

REV.	DATE	REVISION DESCRIPTION	SHEET NO.

THE INFORMATION, INCLUDING ESTIMATED QUANTITIES OF WORK, SHOWN ON THESE SHEETS IS BASED ON LIMITED INVESTIGATIONS BY THE STATE AND IS IN NO WAY WARRANTED TO INDICATE THE CONDITIONS OF ACTUAL QUANTITIES OF WORK WHICH WILL BE REQUIRED.

Plotted Date: 8/14/2012

DESIGNER/DRAFTER: SLM
CHECKED BY: MJS
SCALE AS NOTED

STATE OF CONNECTICUT
DEPARTMENT OF TRANSPORTATION

Filename: ...\FD_MSH_ARC_083_0260_SS002.dgn

SIGNATURE/BLOCK: OFFICE OF ENGINEERING
APPROVED BY:

PROJECT TITLE: SEA STREET SALT STORAGE FACILITY

TOWN: NEW HAVEN

DRAWING TITLE: FLOOR PLAN & ELEVATIONS

PROJECT NO. 92-549
DRAWING NO. SS-002
SHEET NO. 07.03

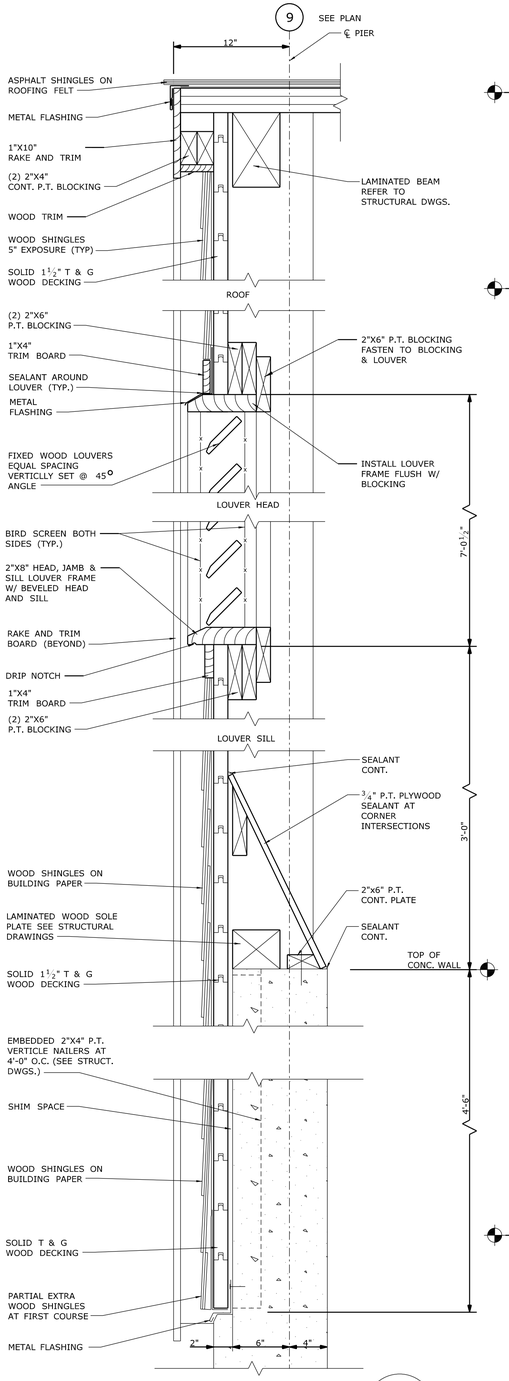

END WALL SECTION 5 / SS-003
SCALE: 1 1/2" = 1'-0"

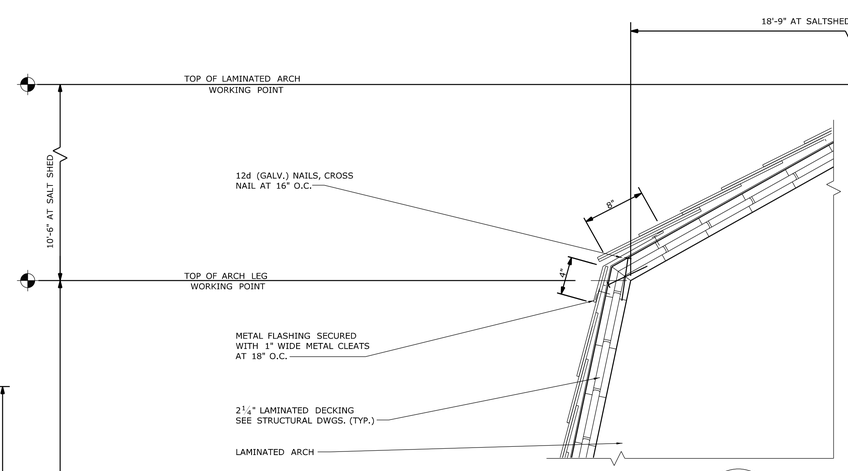

DETAIL 2 / SS-003
SCALE: 1 1/2" = 1'-0"

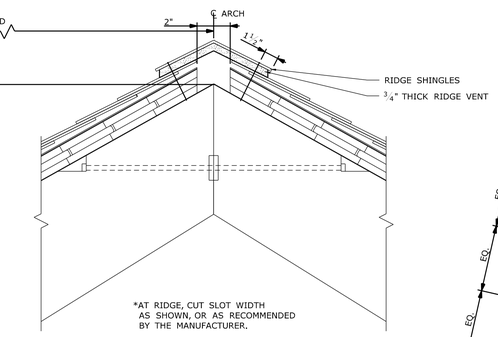

DETAIL @ RIDGE 1 / SS-003
SCALE: 1 1/2" = 1'-0"

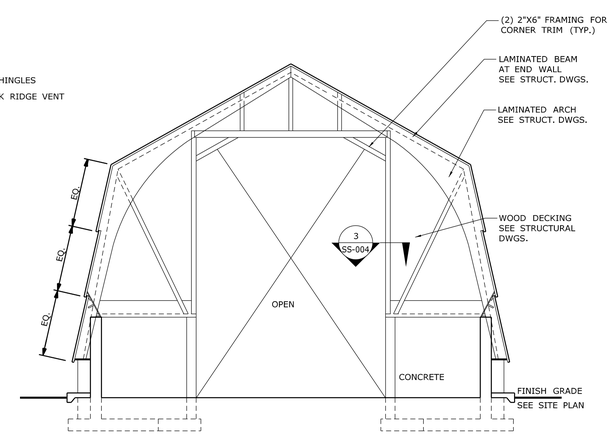

SECTION 6 / SS-003
SCALE: 1/8" = 1'-0"

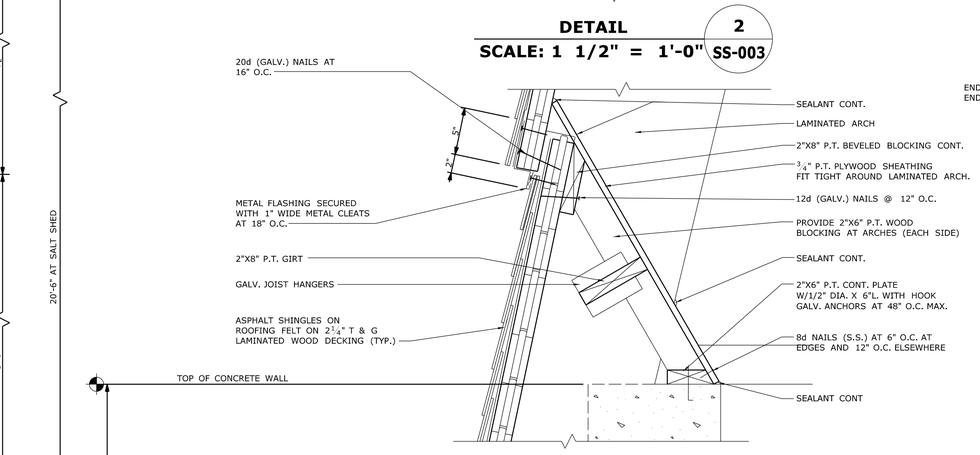

DETAIL @ TOP OF CONC. WALL 3 / SS-003
SCALE: 1 1/2" = 1'-0"

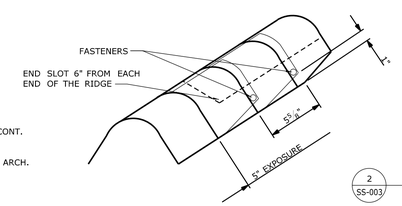

RIDGE SHINGLES
N.T.S.

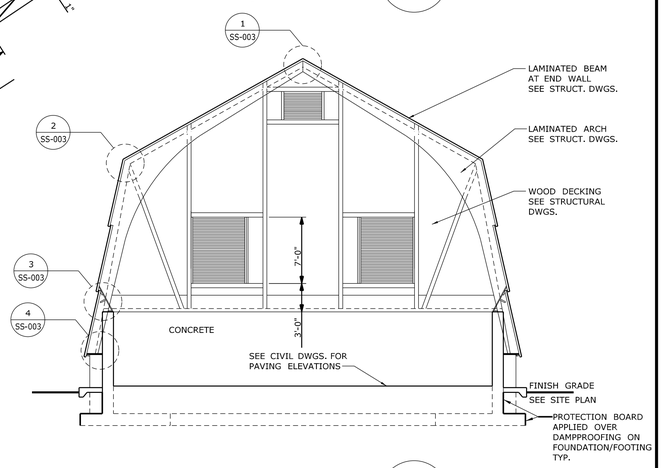

SECTION 7 / SS-003
SCALE: 1/8" = 1'-0"

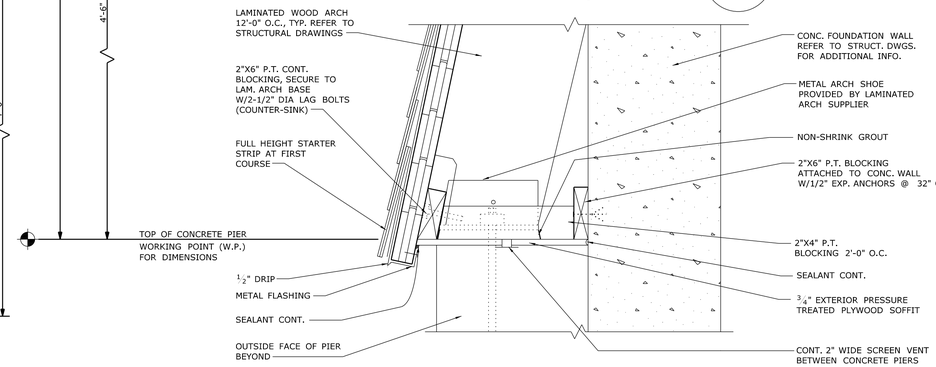

DETAIL @ LAMINATED ARCH BASE 4 / SS-003
SCALE: 1 1/2" = 1'-0"

GENERAL NOTES:

1. ALL BLOCKING AND MISCELLANEOUS TO BE PRESSURE TREATED (P.T.)

2. ALL TRIM BOARDS AND LOUVERS TO BE WESTERN RED CEDAR.

3. CONTRACTORS SHALL BE USING THE SIX NAIL PATTERN WHEN FASTENING THE ASPHALT SHINGLES TO THE SUBSTRUCTURE. SEE DETAIL 7/SS-004.

REV.	DATE	REVISION DESCRIPTION	SHEET NO.

THE INFORMATION, INCLUDING ESTIMATED QUANTITIES OF WORK, SHOWN ON THESE SHEETS IS BASED ON LIMITED INVESTIGATIONS BY THE STATE AND IS IN NO WAY WARRANTED TO INDICATE THE CONDITIONS OF ACTUAL QUANTITIES OF WORK WHICH WILL BE REQUIRED.

Plotted Date: 8/14/2012

DESIGNER/DRAFTER: SLM
CHECKED BY: MJS
SCALE AS NOTED

STATE OF CONNECTICUT
DEPARTMENT OF TRANSPORTATION

Filename: ...\FD_MSH_ARC_083_0260_SS003.dgn

SIGNATURE/BLOCK: OFFICE OF ENGINEERING
APPROVED BY:

PROJECT TITLE: SEA STREET SALT STORAGE FACILITY

TOWN: NEW HAVEN

DRAWING TITLE: ARCHITECTURAL SECTIONS & DETAILS

PROJECT NO. 92-549
DRAWING NO. SS-003
SHEET NO. 07.04

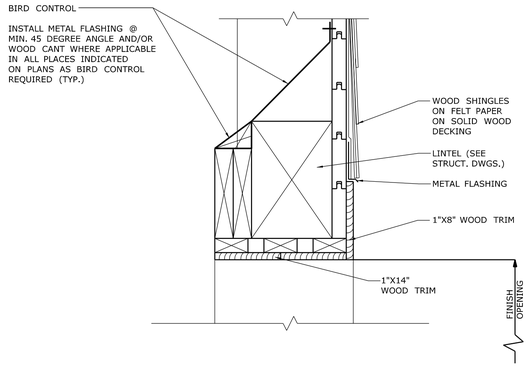

HEAD SECTION (1 / SS-004)
SCALE: 1 1/2" = 1'-0"

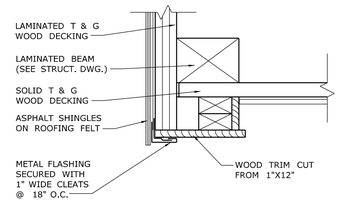

SECTION (2 / SS-004)
SCALE: 1 1/2" = 1'-0"

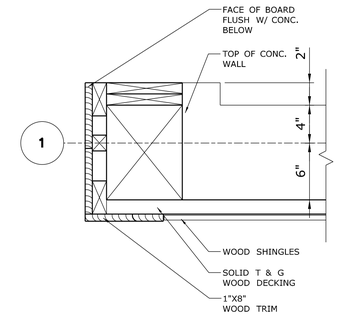

JAMB SECTION (3 / SS-004)
SCALE: 1 1/2" = 1'-0"

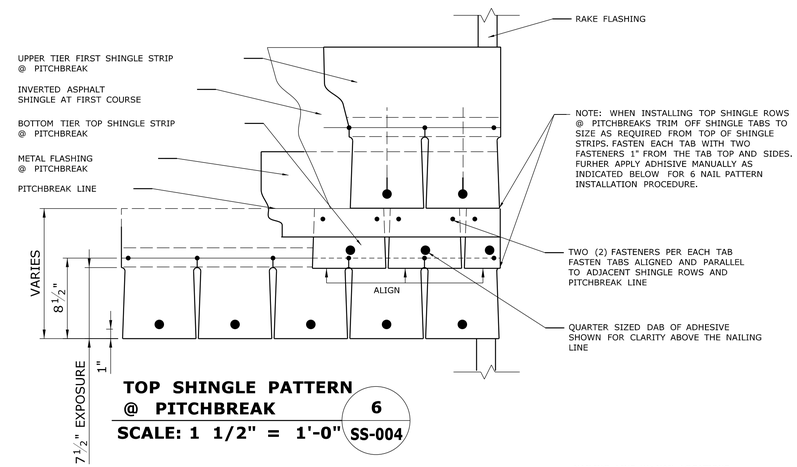

TOP SHINGLE PATTERN @ PITCHBREAK (6 / SS-004)
SCALE: 1 1/2" = 1'-0"

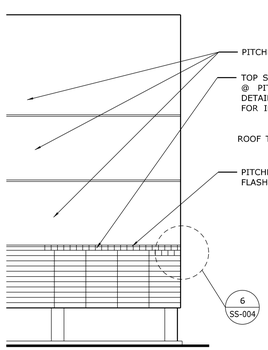

SIDE ELEVATION (4 / SS-004)
SCALE: 1/8" = 1'-0"

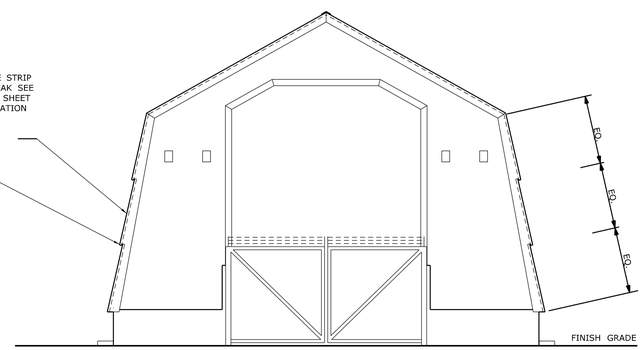

FRONT ELEVATION (5 / SS-004)
SCALE: 1/8" = 1'-0"

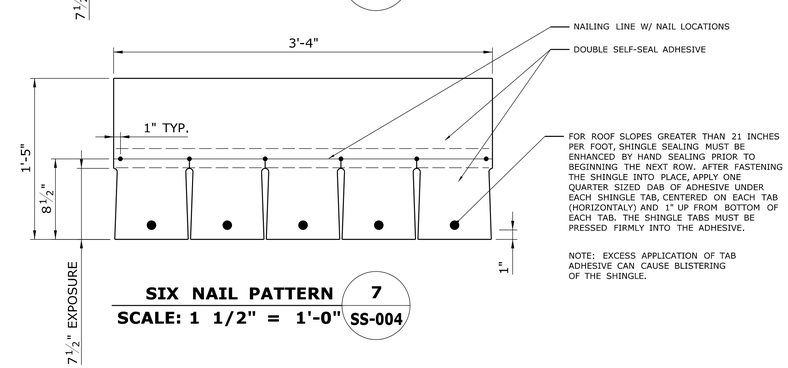

SIX NAIL PATTERN (7 / SS-004)
SCALE: 1 1/2" = 1'-0"

REV.	DATE	REVISION DESCRIPTION	SHEET NO.

THE INFORMATION, INCLUDING ESTIMATED QUANTITIES OF WORK, SHOWN ON THESE SHEETS IS BASED ON LIMITED INVESTIGATIONS BY THE STATE AND IS IN NO WAY WARRANTED TO INDICATE THE CONDITIONS OF ACTUAL QUANTITIES OF WORK WHICH WILL BE REQUIRED.

Plotted Date: 8/14/2012

DESIGNER/DRAFTER: **SLM**
CHECKED BY: **MJS**
SCALE AS NOTED

STATE OF CONNECTICUT
DEPARTMENT OF TRANSPORTATION

Filename: ...\FD_MSH_ARC_083_0260_SS004.dgn

SIGNATURE/ BLOCK: **OFFICE OF ENGINEERING**
APPROVED BY:

PROJECT TITLE: **SEA STREET SALT STORAGE FACILITY**

TOWN: **NEW HAVEN**

DRAWING TITLE: **MISCELLANEOUS DETAILS**

PROJECT NO. **92-549**
DRAWING NO. **SS-004**
SHEET NO. **07.05**

1. GENERAL

1a. ALL WORK SHALL CONFORM TO THE STATE OF CONNECTICUT BUILDING CODE AND THE CONTRACT DOCUMENTS.

1b. THE NOTES ON THIS SHEET APPLY TO DRAWINGS SS-005 THROUGH SS-008.

1c. IF ANY FIELD CONDITIONS PRECLUDE COMPLIANCE WITH THE DRAWINGS AND/OR CONDITIONS SPECIFIED, THE CONTRACTOR SHALL IMMEDIATELY NOTIFY THE ENGINEER AND SHALL NOT PROCEED WITH ANY WORK THAT WOULD BE AFFECTED.

1d. THE CONTRACTOR SHALL VERIFY ALL DIMENSIONS WITH ELECTRICAL DRAWINGS (INCLUDING ALL CONTRACTOR SHOP DRAWINGS). REFER TO ELECTRICAL DRAWINGS FOR THE LOCATIONS OF MASONRY BOXES, CONDUIT PENETRATION AND GROUNDING.

1e. ALL EXPOSED EDGES OF CONCRETE SHALL BE CHAMFERED $\frac{3}{4}$" X $\frac{3}{4}$" UNLESS OTHERWISE INDICATED.

1f. CONSTRUCTION JOINTS OTHER THAN SHOWN ON PLAN WILL NOT BE PERMITTED WITHOUT THE PRIOR APPROVAL OF THE ENGINEER.

1g. PLACE (1) ONE FOOT MINIMUM DEPTH OF GRANULAR FILL UNDER UNDER ALL BUILDING FOOTINGS. EXTEND THE GRANULAR FILL 24 INCHES BEYOND THE LIMITS OF THE FOOTING.

2. DESIGN BASIS

2a. CONNECTICUT STATE BUILDING CODE

3. DESIGN AND CONSTRUCTION PARAMETERS

3a. MAXIMUM SOIL BEARING PRESSURE:
1. THE FACTORED BEARING RESISTANCE AT THE SERVICE LIMIT STATE IS 4,000 PSF
2. THE FACTORED BEARING RESISTANCE AT THE STRENGTH LIMIT STATE IS 4,600 PSF
3. ALL FOOTINGS MINIMUM EMBEDMENT TO BE 3.5 FEET.
4. THE SALT SHED FOUNDATION CAN BE CONSTRUCTED WITH THE USE OF OPEN EXCAVATION. MAINTAIN TEMPORARY EARTH SLOPES AT A MAXIMUM ANGLE OF 1(V) TO 1 1/2(H).
5. IF GROUNDWATER WILL BE ENCOUNTERED SHOULD DEWATERING BE REQUIRED, IT CAN BE ACCOMPLISHED USING APPROPRIATE SIZED PUMPS AND SUMPS WHICH IS INCLUDED IN THE COST OF TRENCH EXCAVATION.
6. PRELOAD THE PORPOSED LOCATION FOR THE SALT SHED FOR A MINIMUM OF 30 DAYS PRIOR TO BEGINNING CONSTRUCTION. THE TOP OF THE PRELOAD SHOULD BE AT ELEVATION 15. INSTALL THE PRELOAD SO THE SURFACE OF THE PRELOAD IS GENERALLY LEVEL WITHIN A TOLERANCE OF APPROXIMATELY +6 INCHES.

3b. MATERIAL STRENGTHS
SPECIFIED MINIMUM YIELD STRENGTH OF DEFORMED BARS :Fy = 60,000 PSI
ALL CAST-IN-PLACE CONCRETE SHALL HAVE A MINIMUM 28-DAY
SPECIFIED COMPRESSIVE STRENGTH OF CONCRETE : F'C = 5000 PSI

SPECIFIED YIELD STRENGTH OF STRUCTURAL STEEL :Fy = 60,000 PSI

3c. ALL REINFORCING BARS SHALL BE EPOXY-COATED

3d. DEVELOPMENT LENGTH
ALL REINFORCING BAR DEVELOPMENT LENGTH SHALL BE ESTABLISHED FROM THE REQUIREMENTS OF ACI 318R-02 - BUILDING CODE REQUIREMENTS FOR REINFORCED CONCRETE, AND STEEL SHALL BE BASED ON F'c = 5,000 PSI AND Fy = 60,000 PSI

3e. LIVE LOADS

GROUND SNOW LOAD (Pg)	30 PSF
SNOW IMPORTANCE FACTOR (Is)	1.0
EXPOSURE FACTOR (Ce)	0.9
FLAT ROOF SNOW LOAD (PF)	30 PSF
SLOPED ROOF SNOW LOAD (Ps) (29.25 DEGREE SLOPE)	30 PSF
(79.63DEGREE SLOPE)	0 PSF
UNBALANCED SNOW LOAD (Ps) (29.25 DEGREE SLOPE)	0 PSF

3f. WIND LOADS

BASIC WIND SPEED	110 MPH
EFFECTIVE VELOCITY PRESSURE (Pe) 0' TO 20'	27 PSF
EFFECTIVE VELOCITY PRESSURE (Pe) 0' TO 20'	27 PSF
(Pe) 20' TO 40'	30 PSF
IMPORTANCE FACTOR (Iw)	1.0

3g. SEISMIC DESIGN PARAMETERS

PEAK ACCELERATION	Aa=0.15
PEAK VELOCITY-RELATED ACCELERATION	Av=0.11
SEISMIC IMPORTANCE FACTOR, Ie	1.0
SEISMIC DESIGN CATEGORY	E
SOIL-PROFILE TYPE	S1

BASIC STRUCTURAL SYSTEM-BUILDING FRAME SYSTEM:
LIGHT FRAMED WALLS WITH SHEAR PANELS

RESPONSE MODIFICATION FACTOR	R=6.5
DEFLECTION AMPLIFICATION FACTOR	Cd=4

ANALYSIS PROCEDURE - EQUIVALENT LATERAL FORCE PROCEDURE

4. WOOD DESIGN

4a. TUDOR ARCHES
SPECIES: SOUTHERN PINE

STRESSES	Fb	2,300 PSI
	Fv	165 PSI
	E	1,800,000 PSI
	Fb	2,400 PSI
	Fv	200 PSI
	Fc	2,200 PSI
	E	1,800,000 PSI

4b. STRAIGHT BEAMS AND COLUMNS
SPECIES: SOUTHERN PINE

STRESSES	Fb	2,400 PSI
	Fv	200 PSI
	Fc	2,200 PSI
	E	1,800,000 PSI

4b. TONGUE AND GROOVE DECKING
SPECIES: SOUTHERN PINE OR DOUGLAS FIR/ LARCH

STRESSES	Fb	2,300 PSI
	Fv	165 PSI
	E	1,800,000 PSI

5. CAST-IN-PLACE CONCRETE

5a. ALL CONCRETE SHALL BE CLASSIFIED AS NORMAL WEIGHT, EXCEPT AS NOTED, WITH A UNIT WEIGHT OF 145 PSI.

CONCRETE SHALL BE CLASS 'F' IN ACCORDANCE WITH FORM 816, SECTION M.03 AND CSI SPECIFICATION, SECTION 033000.

5b. REINFORCED CONCRETE SHALL BE IN ACCORDANCE WITH ACI 318 "BUILDING CODE REQUIREMENTS FOR REINFORCED CONCRETE".

5c. REINFORCING BARS SHALL BE DEFORMED STEEL CONFORMING TO ASTM A615, GRADE 60. USE EPOXY-COATED BARS FOR THE CONSTRUCTION OF PILASTERS AND CONCRETE WALLS.

5d. GROUT UNDER BASE PLATES SHALL BE 6000 PSI, NON-SHRINK CEMENTITIOUS TYPE AND SHALL BE 2 INCHES THICK, (MIN.) U.N.O.

5e. THE CONTRACTOR SHALL COORDINATE THE PLACEMENT OF FOUNDATION EXPANSION AND CONTRACTION JOINTS. CONTRACTION JOINTS IN THE FOUNDATION WALLS SHALL BE PROVIDED AT A MAXIMUM SPACING OF 24-0"

5f. REINFORCEMENT DETAILS SHALL CONFORM TO ACI 318. ALL CONCRETE REINFORCEMENT SPLICES SHALL BE ACI 318 CLASS 'B' SPLICES, UNLESS OTHERWISE NOTED.

5g. ADDITIONAL REINFORCEMENT AT PENETRATIONS THROUGH REINFORCED CONCRETE WALLS AND SLABS SHALL BE PROVIDED AS SHOWN ON THE STRUCTURAL PLANS.

5h. REINFORCING CLEAR COVER, UNLESS OTHERWISE NOTED:

CONCRETE CAST AGAINST EARTH 3"

CONCRETE EXPOSED TO WEATHER OR EARTH:
NO. 6 AND LARGER 2"
NO. 5 AND SMALLER $1\frac{1}{2}$"

CONCRETE NOT EXPOSED TO WEATHER OR NOT IN CONTACT WITH GROUND:
SLABS, WALLS, JOISTS
NO. 14 AND NO. 18 $1\frac{1}{2}$"
NO. 11 AND SMALLER $\frac{3}{4}$"

BEAMS, COLUMNS:
PRIMARY REINFORCEMENT, TIES, STIRRUPS, SPIRALS $1\frac{1}{2}$"

TIES FOR PIERS 2"

5i. WHEN CONCRETE IS PLACED AGAINST PREVIOUSLY HARDENED CONCRETE, THE INTERFACE SHALL BE MADE CLEAN, FREE OF LAITANCE AND ROUGHENED TO AN AMPLITUDE OF ABOUT $\frac{1}{4}$ INCH.

5j. CONCRETE MIX DESIGN WITH ADMIXTURES SHALL BE SUBMITTED TO THE ENGINEER FOR APPROVAL.

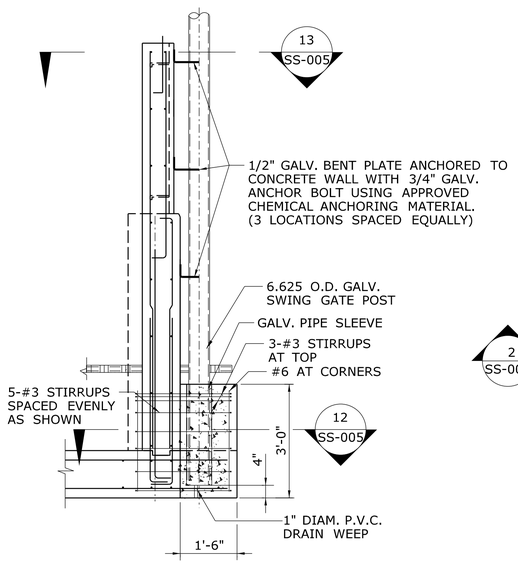

SECTION - LEDGE FOR SWING GATE POST 14 SS-005
SCALE: 1/2" = 1'-0"

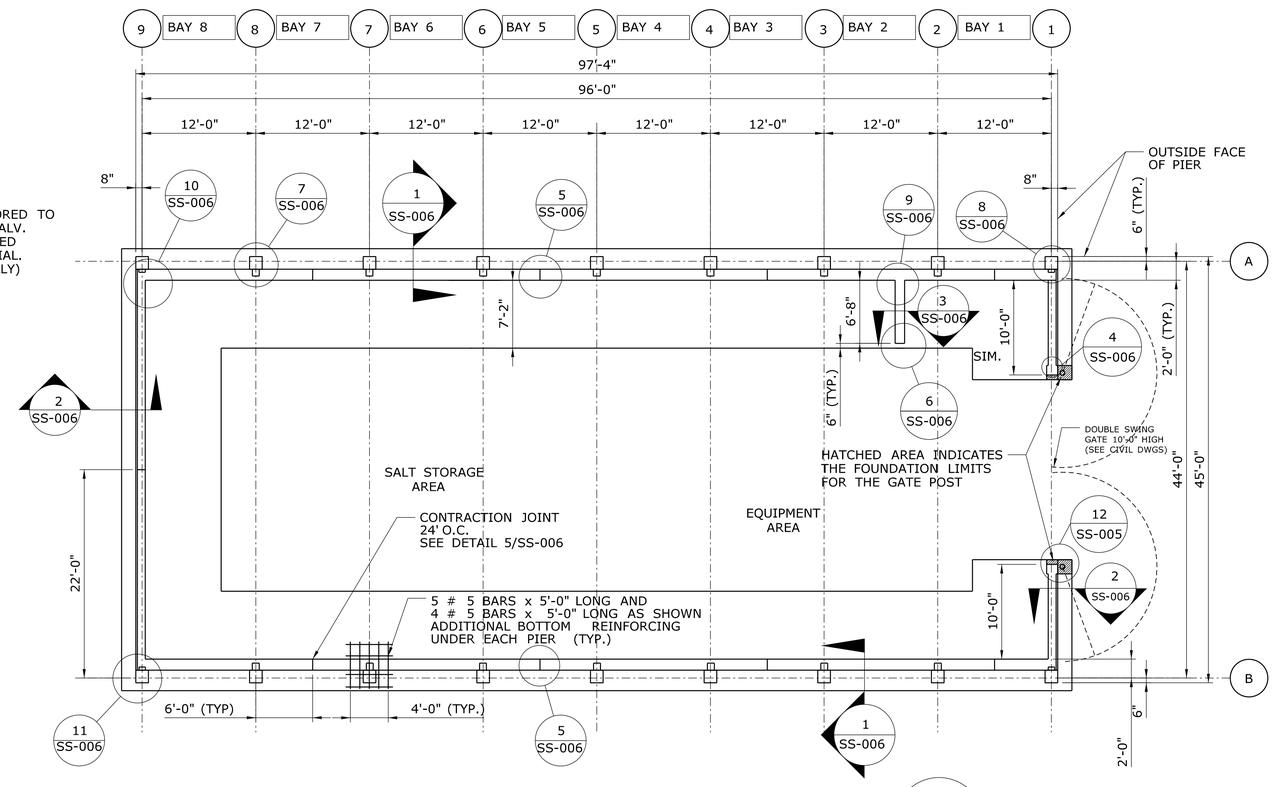

SALT SHED FOUNDATION PLAN 1 SS-005
SCALE $\frac{1}{8}$" = 1'0"

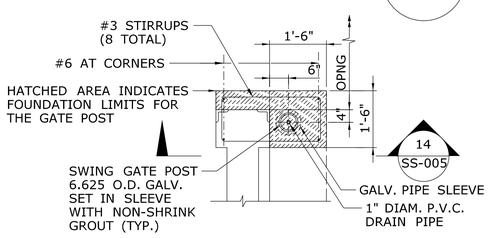

PLAN - LEDGE FOR SWING GATE POST 12 SS-005
SCALE: 3/8" = 1'-0"

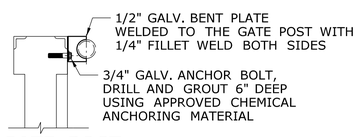

SWING GATE POST ANCHORING DETAIL 13 SS-005
SCALE: 3/8" = 1'-0"

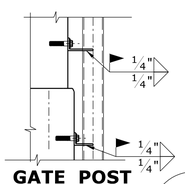

SWING GATE POST WELDING DETAIL 14 SS-005
SCALE: 3/8" = 1'-0"

REV.	DATE	REVISION DESCRIPTION	SHEET NO.

THE INFORMATION, INCLUDING ESTIMATED QUANTITIES OF WORK, SHOWN ON THESE SHEETS IS BASED ON LIMITED INVESTIGATIONS BY THE STATE AND IS IN NO WAY WARRANTED TO INDICATE THE CONDITIONS OF ACTUAL QUANTITIES OF WORK WHICH WILL BE REQUIRED.

Plotted Date: 8/24/2012

DESIGNER/DRAFTER: SAB/RPL
CHECKED BY: RPL
SCALE AS NOTED

STATE OF CONNECTICUT
DEPARTMENT OF TRANSPORTATION

Filename: ...\FD_MST_STR_0092_0549_SS005.dgn

SIGNATURE/ BLOCK: OFFICE OF ENGINEERING
APPROVED BY:

PROJECT TITLE: SEA STREET SALT STORAGE FACILITY

TOWN: NEW HAVEN

DRAWING TITLE: FOUNDATION PLAN & GENERAL NOTES

PROJECT NO. 92-549
DRAWING NO. SS-005
SHEET NO. 07.06

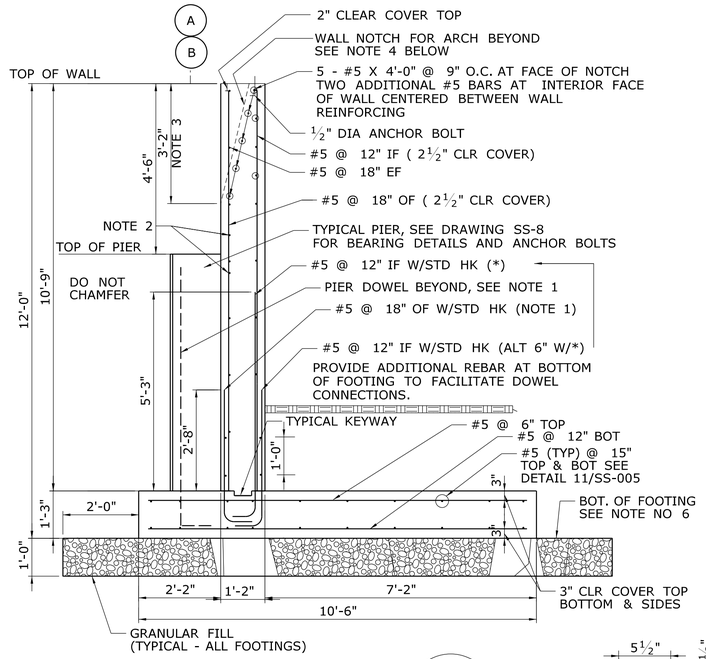

SIDE WALL 1 / SS-005

SCALE 1/2"=1'-0"

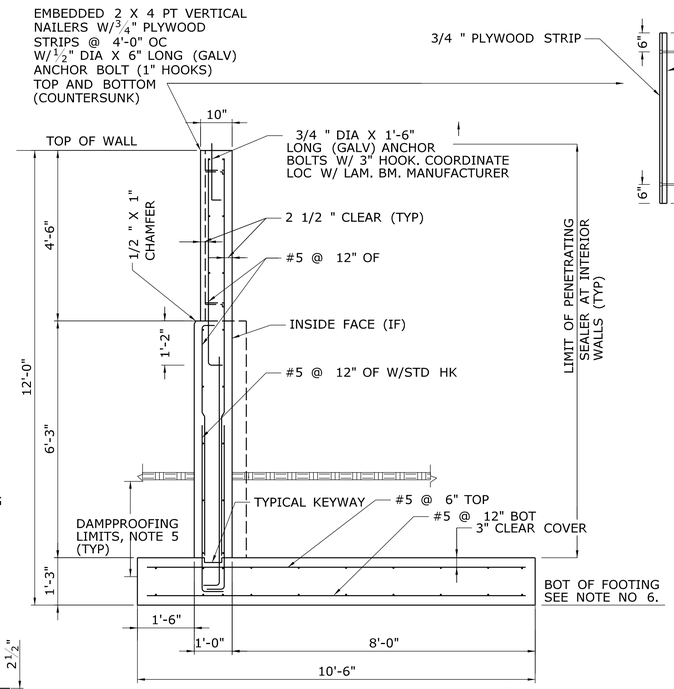

FRONT WALL/BACK WALL 2 / SS-005

SCALE 1/2"=1'-0"

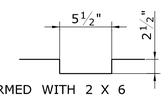

FORMED WITH 2 X 6

TYPICAL KEY WAY DETAIL

SCALE 1 1/2" = 1'-0"

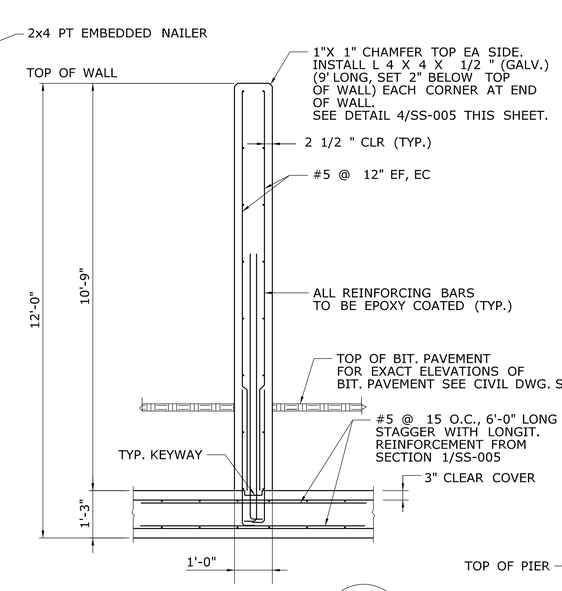

INTERIOR WALL 3 / SS-005

SCALE 1/2"=1'-0"

REINFORCING FOR THIS SECTION AS PER SECTION 1 THIS SHEET UNLESS OTHERWISE INDICATED

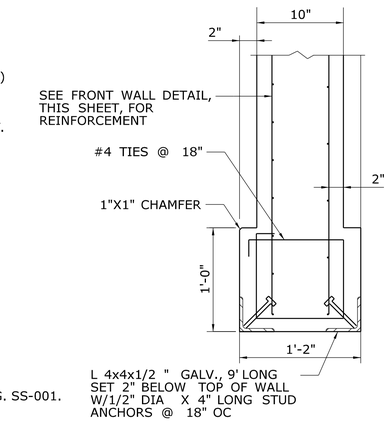

END WALL DETAIL (TYP) 4 / SS-005

NOT TO SCALE

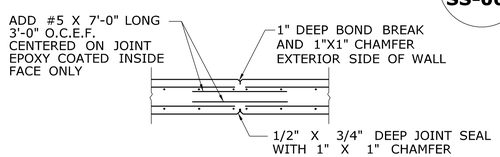

SEE DRAWING SS-005 FOR LOCATIONS
MAXIMUM SPACING ALLOWED IS 24'-0"

CONTRACTION JOINT DETAIL 5 / SS-005

NOT TO SCALE

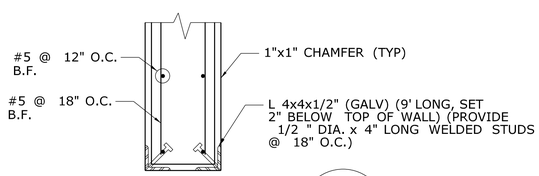

INTERIOR WALL DETAIL 6 / SS-005

SCALE 1" = 1'-0"

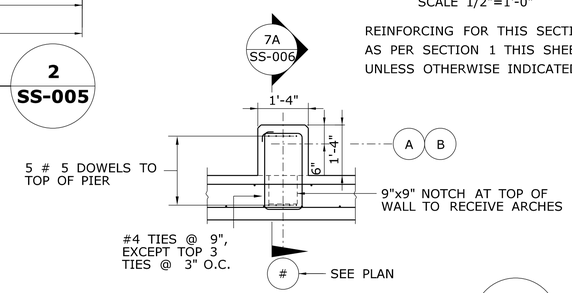

INTERIOR PIER REINFORCING (TYP.) 7 / SS-005

SCALE 1/2" = 1'-0"

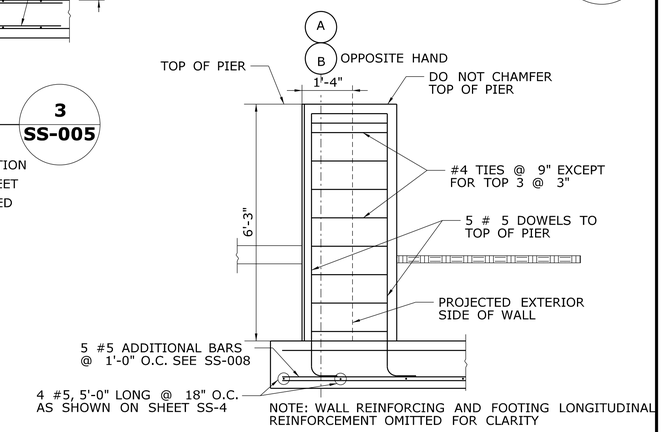

INTERIOR PIER REINFORCING (TYP.) 7A / SS-006

SCALE 1/2" = 1'-0"

NOTES:

1. SEE PIER DETAILS 7a AND 8 FOR DOWELS AT PIERS.
2. 2 #5 BARS ADDITIONAL LOCATED 6" ABOVE AND BELOW TOP OF PIER.
3. THIS DIMENSION IS 1'-4" AT CORNER PIERS.
4. NOTCHES AT TOP OF CONCRETE WALL ARE REQUIRED TO RECEIVE LAMINATED ARCHES. SEE INTERIOR AND CORNER PIER DETAILS THIS SHEET FOR ADDITIONAL DIMENSIONS. THESE DIMENSIONS WERE BASED ON PROVIDING A 2" GAP MEASURED PERPENDICULAR FROM THE WOOD ARCH TO THE CONCRETE ON ALL SIDES. MAINTAIN THIS GAP THROUGH VERIFICATION WITH THE WOOD ARCH MANUFACTURER.
5. DAMPPROOFING SHALL EXTEND OVER TOP OF FOOTING AND 6" (MIN) OVER OUTSIDE FACE OF FOOTING - SEE SPECIFICATIONS SECTION 071113.
6. BOTTOM OF FOOTING ELEVATION=3'-6" MINIMUM BELOW LOWEST ELEVATION OF BITUMINOUS PAVEMENT. COORDINATE WITH CIVIL DWGS.

ABBREVIATIONS

OF - OUTSIDE FACE	OC - ON CENTER
IF - INSIDE FACE	CLR - CLEAR
EF - EACH FACE	STD - STANDARD
HK - HOOK	TYP - TYPICAL
EC - EPOXY COATED	DIA - DIAMETER
PT - PRESSURE TREATED	OH - OPPOSITE HAND
	DWG - DRAWING

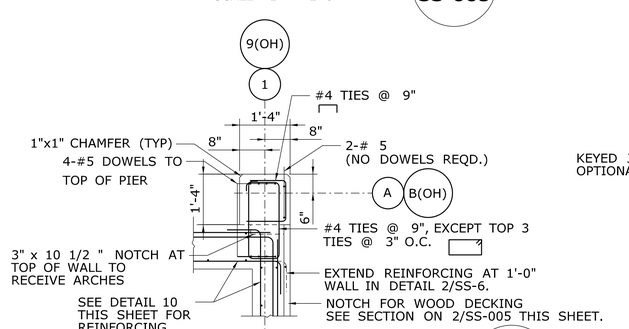

CORNER PIER REINFORCING (TYP.) 8 / SS-005

SCALE 1/2" = 1'-0"

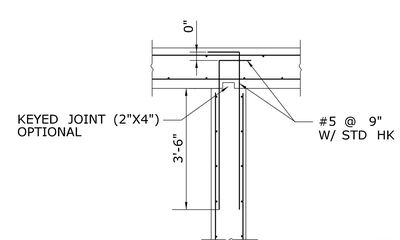

INTERSECTING WALLS 9 / SS-005

NOT TO SCALE

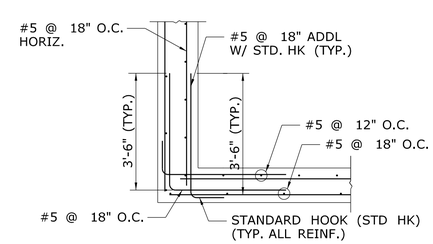

CORNER WALLS (TYP.) 10 / SS-005

NOT TO SCALE

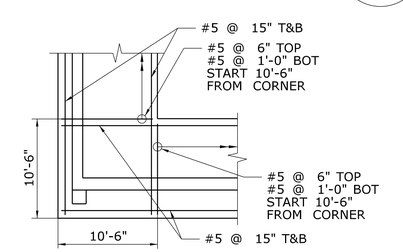

CORNER FOOTING (TYP.) 11 / SS-005

NOT TO SCALE

REV.	DATE	REVISION DESCRIPTION	SHEET NO.
-	-	-	-
-	-	-	-
-	-	-	-
-	-	-	-
-	-	-	-
-	-	-	-

THE INFORMATION, INCLUDING ESTIMATED QUANTITIES OF WORK, SHOWN ON THESE SHEETS IS BASED ON LIMITED INVESTIGATIONS BY THE STATE AND IS IN NO WAY WARRANTED TO INDICATE THE CONDITIONS OF ACTUAL QUANTITIES OF WORK WHICH WILL BE REQUIRED.

Plotted Date: 8/24/2012

DESIGNER/DRAFTER: SAB/RPL
CHECKED BY: RPL
SCALE AS NOTED

STATE OF CONNECTICUT
DEPARTMENT OF TRANSPORTATION

Filename: ...\FD_MST_STR_0092_0549_SS006.dgn

SIGNATURE/BLOCK: OFFICE OF ENGINEERING
APPROVED BY: DATE:

PROJECT TITLE: SEA STREET SALT STORAGE FACILITY

TOWN: NEW HAVEN

DRAWING TITLE: STRUCTURAL FOUNDATION DETAILS

PROJECT NO. 92-549
DRAWING NO. SS-006
SHEET NO. 07.07

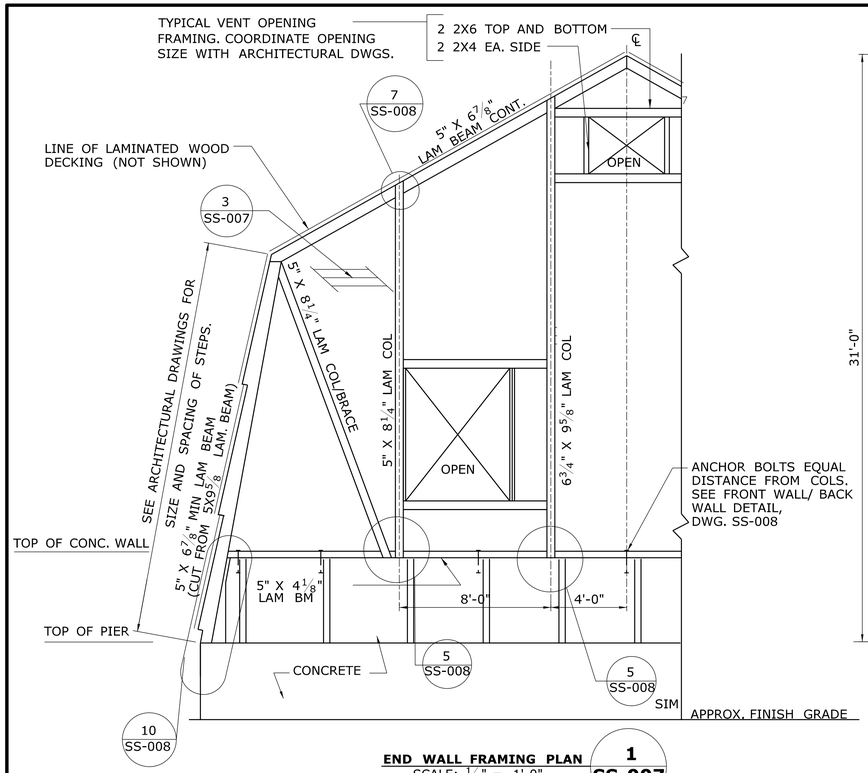

END WALL FRAMING PLAN — 1 / SS-007
SCALE: ¼" = 1'-0"

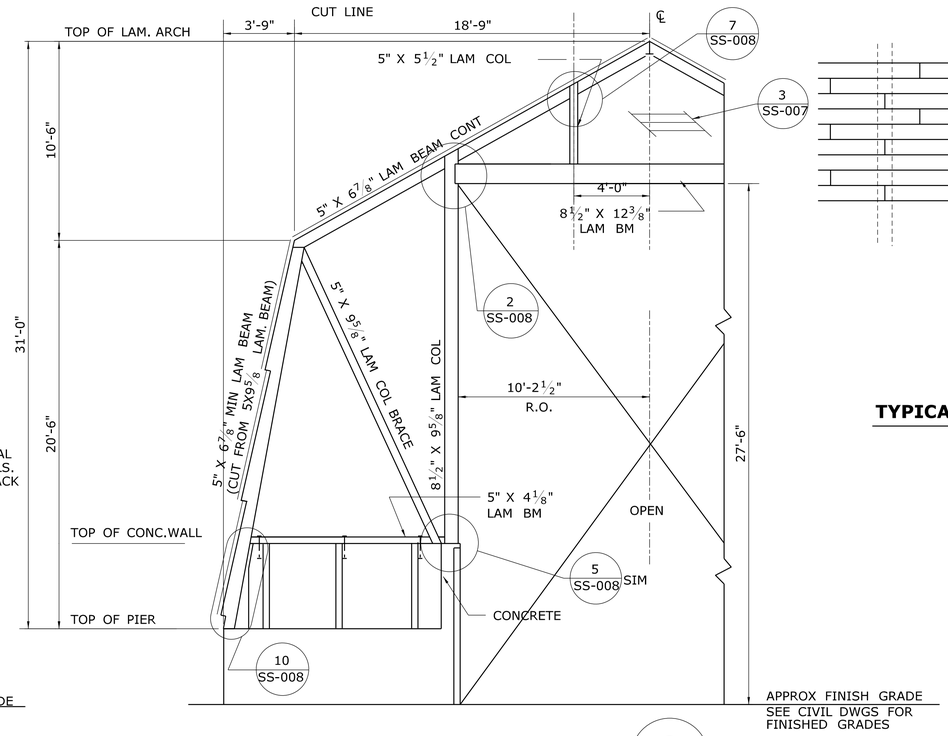

FRONT WALL FRAMING PLAN — 2 / SS-007
SCALE: ¼" = 1'-0"

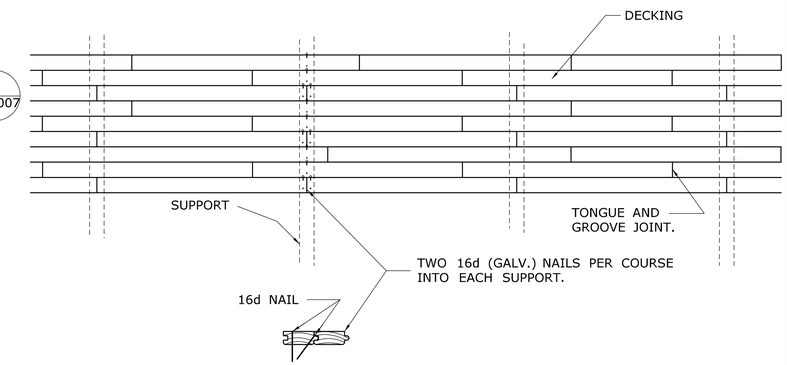

TYPICAL 1 1/2" SOLID DECKING NAILING PATTERN — 3 / SS-007
SCALE: NONE

DECKING LAYUP - CANTILEVERED PIECES, INTERMIXED

1. PIECES IN THE STARTER COURSE AND EVERY THIRD COURSE ARE SIMPLE SPAN.
2. PIECES IN OTHER COURSES ARE CANTILEVERED OVER THE SUPPORTS WITH END JOINTS AT ALTERNATE QUARTER POINTS OR THIRD POINTS OF SPAN AND EACH PIECE RESTS ON AT LEAST ONE SUPPORT.
3. LAY DECKING WITH TONGUES UP.
4. USE TWO-SPANS CONTINUOUS LAYUP FOR TWO SPAN CONDITIONS.
5. ALL SOLID DECKING SHALL BE SEALED WITH A PENETRATING SEAL COAT.

ABBREVIATIONS:

BM	BEAMS
SIM	SIMILAR
FND	FOUNDATION
RO	ROUGH OPENING
COL	COLUMN
LAM	LAMINATED
DO	DITTO (SAME)

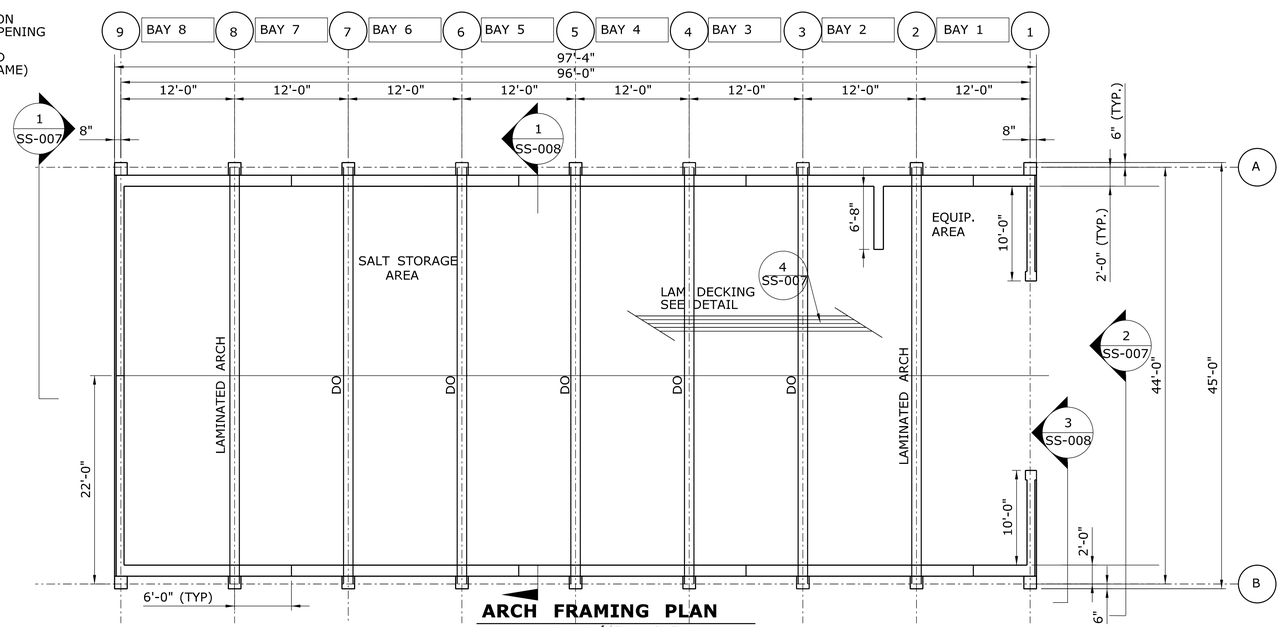

ARCH FRAMING PLAN
SCALE: ⅛" = 1'-0"

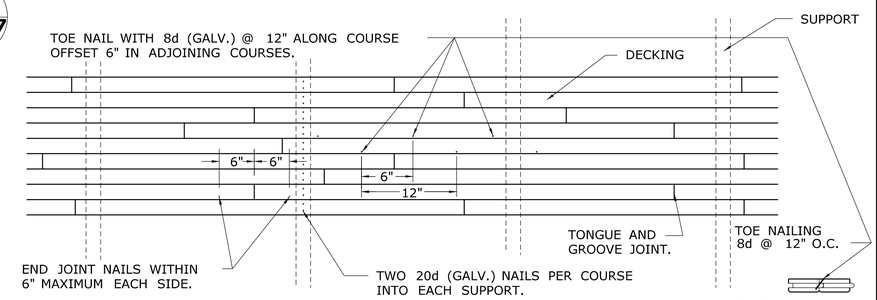

TYPICAL 2 1/4" LAM DECKING NAILING PATTERN — 4 / SS-007
SCALE: NONE

DECKING LAYUP - RANDOM LENGTH CONTINUOUS

1. EACH PIECE OF DECK MUST BE OVER AT LEAST TWO SUPPORTS.
2. DECKING SHALL BE LAID TO DISPERSE END-JOINTS AS RANDOMLY AS POSSIBLE, SO THAT:
   a) THE DISTANCE BETWEEN END-JOINTS IN ADJACENT ROWS OF DECKING IS AT LEAST TWO (2') FEET.
   b) THE DISTANCE BETWEEN END-JOINTS IN ROWS OF DECKING SEPARATED BY ONLY ONE ROW IS AT LEAST ONE (1') FOOT.
3. LAY END SPANS BY ELIMINATING END-JOINT IN ONE-THIRD OF THE COURSES OF DECKING.
4. TOE-NAIL WITHIN 6" OF ALL END-MATCHED ENDS.
5. LAY DECKING WITH TONGUES UP.
6. ALL LAMINATED DECKING SHALL BE SEALED WITH A PENETRATING SEAL COAT.

REV.	DATE	REVISION DESCRIPTION	SHEET NO.

THE INFORMATION, INCLUDING ESTIMATED QUANTITIES OF WORK, SHOWN ON THESE SHEETS IS BASED ON LIMITED INVESTIGATIONS BY THE STATE AND IS IN NO WAY WARRANTED TO INDICATE THE CONDITIONS OF ACTUAL QUANTITIES OF WORK WHICH WILL BE REQUIRED.

Plotted Date: 8/24/2012

DESIGNER/DRAFTER: SAB/RPL
CHECKED BY: RPL
SCALE AS NOTED

STATE OF CONNECTICUT
DEPARTMENT OF TRANSPORTATION

Filename: ...\FD_MST_STR_0092_0549_SS007.dgn

SIGNATURE/ BLOCK: OFFICE OF ENGINEERING
APPROVED BY:

PROJECT TITLE: SEA STREET SALT STORAGE FACILITY

TOWN: NEW HAVEN

DRAWING TITLE: STRUCTURAL ROOF FRAMING PLAN

PROJECT NO. 92-549
DRAWING NO. SS-007
SHEET NO. 07.08

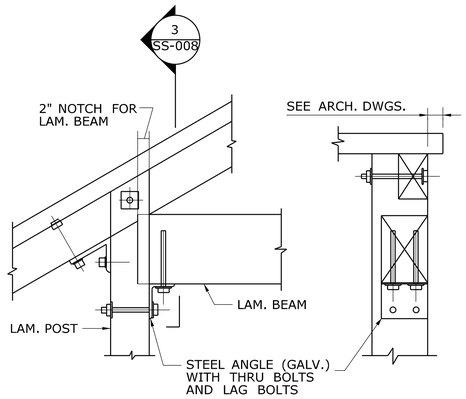

CONNECTION 2 / SS-007
NOT TO SCALE

CONNECTION 3 / SS-008
NOT TO SCALE

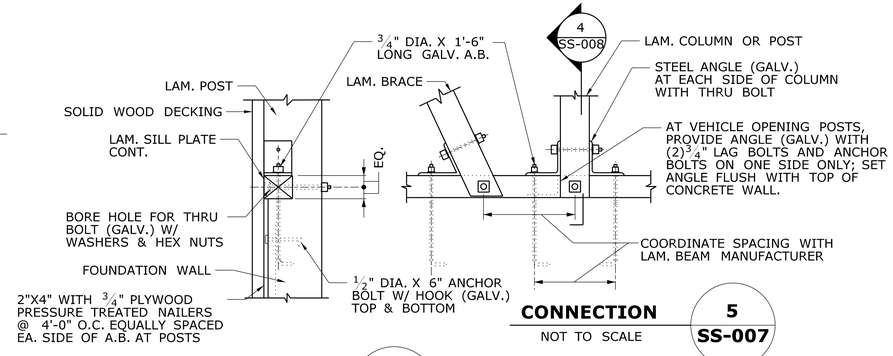

CONNECTION 4 / SS-008
NOT TO SCALE

CONNECTION 5 / SS-007
NOT TO SCALE

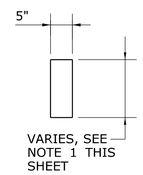

ARCH SECTION 11 / SS-008
SCALE 3/4" = 1'-0"

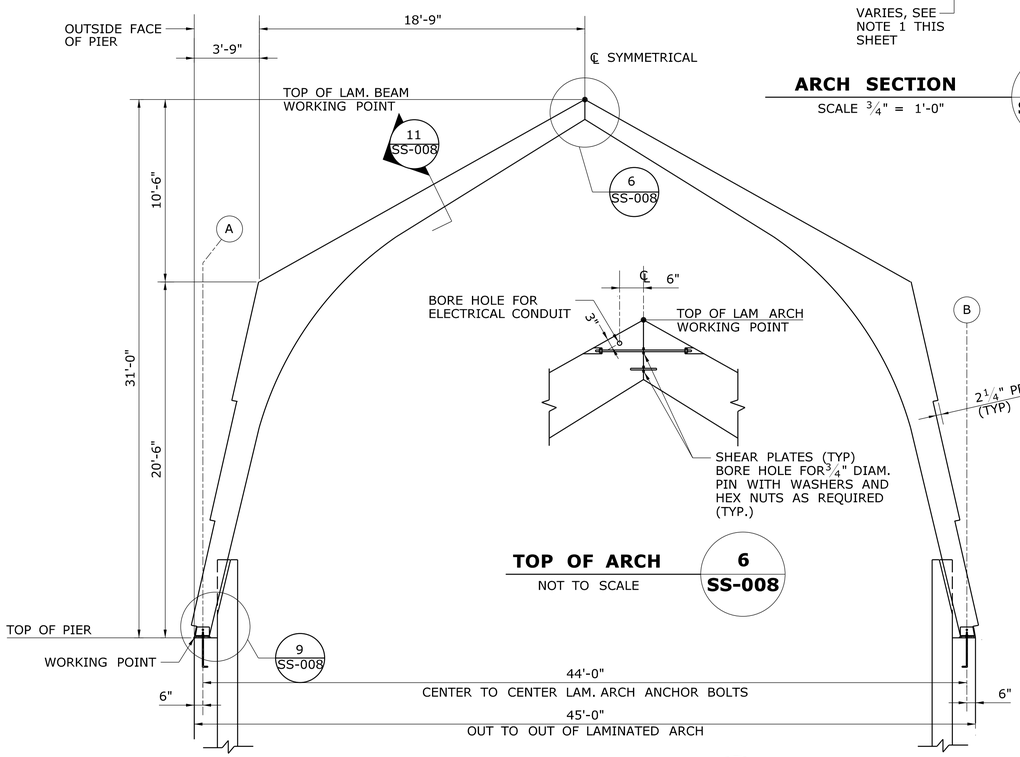

TOP OF ARCH 6 / SS-008
NOT TO SCALE

TYPICAL LAMINATED ARCH 1 / SS-007
NOT TO SCALE

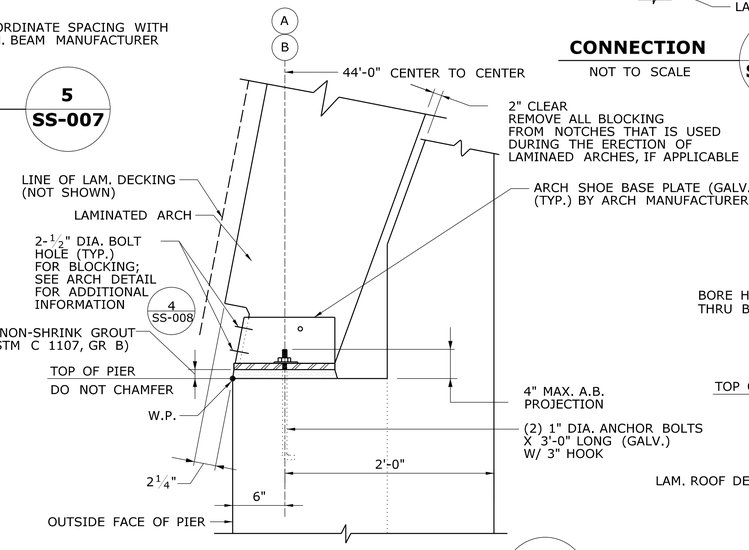

INTERIOR ARCH-PIER INTERFACE 9 / SS-008
NOT TO SCALE

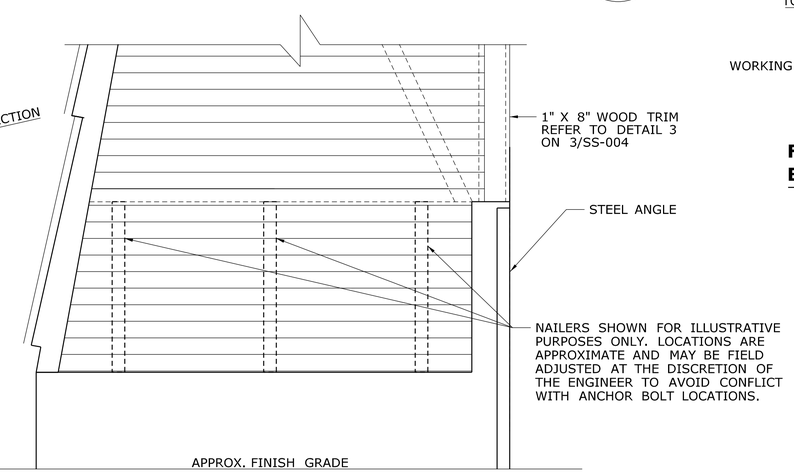

FRONT WALL DECKING ELEVATION 3 / SS-007
SCALE 1/2" = 1'-0"

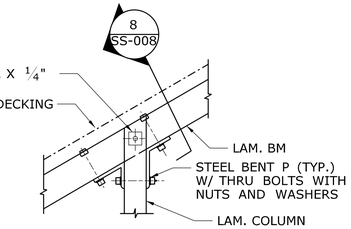

CONNECTION 7 / SS-007
NOT TO SCALE

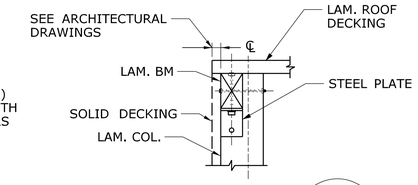

CONNECTION 8 / SS-008
NOT TO SCALE

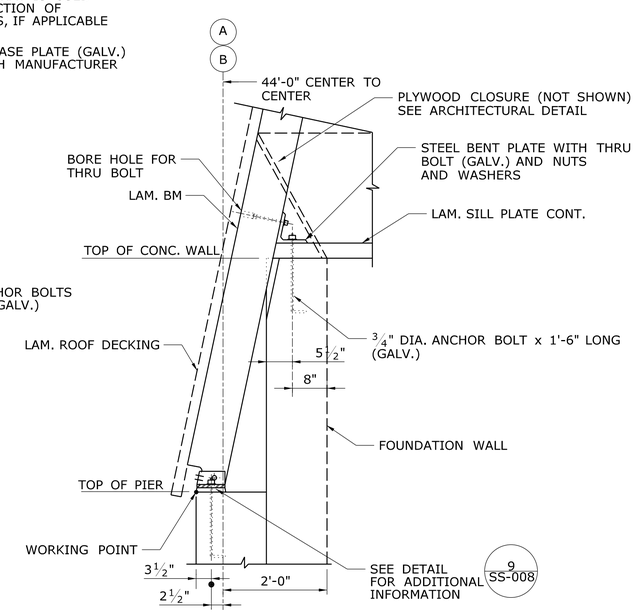

FRONT WALL/BACK WALL BEAM-PIER INTERFACE 10 / SS-007
NOT TO SCALE

NOTES:

1. LAMINATED ARCH IS TO BE DESIGNED BY THE ARCH MANUFACTURER. REFER TO SPECIFICATIONS SECTION 061800.
2. SECTIONS AND DETAILS SHOWN ARE SCHEMATIC. ALL LAMINATED ARCH AND BEAM CONNECTIONS ARE TO BE DESIGNED AND DETAILED BY THE MANUFACTURER.
3. ALL ANCHOR BOLTS EMBEDDED IN CONCRETE SHALL BE PROVIDED BY THE CONTRACTOR.
4. ALL TIMBER CONNECTIONS INCLUDING THRU BOLTS SHALL BE SUPPLIED BY THE TIMBER MANUFACTURER.
5. ALL LAMINATED ARCHES, BEAMS, COLUMNS AND SILLS ETC. SHALL BE PRESSURE PRESERVATIVE TREATED.
6. ALL ANCHOR BOLTS SHALL CONFORM TO ASTM F1554, GR. 36 WITH NUTS AND WASHERS AS SPECIFIED BY SPECIFICATIONS SECTION 055000.

REV.	DATE	REVISION DESCRIPTION	SHEET NO.

THE INFORMATION, INCLUDING ESTIMATED QUANTITIES OF WORK, SHOWN ON THESE SHEETS IS BASED ON LIMITED INVESTIGATIONS BY THE STATE AND IS IN NO WAY WARRANTED TO INDICATE THE CONDITIONS OF ACTUAL QUANTITIES OF WORK WHICH WILL BE REQUIRED.

Plotted Date: 8/24/2012

DESIGNER/DRAFTER: SAB/RPL
CHECKED BY: RPL
SCALE AS NOTED

STATE OF CONNECTICUT
DEPARTMENT OF TRANSPORTATION

Filename: ...\FD_MST_STR_0092_0549_SS008.dgn

SIGNATURE/BLOCK: OFFICE OF ENGINEERING
APPROVED BY:

PROJECT TITLE: SEA STREET SALT STORAGE FACILITY

TOWN: NEW HAVEN
DRAWING TITLE: SECTIONS AND DETAILS

PROJECT NO. 92-549
DRAWING NO. SS-008
SHEET NO. 07.09