05 - CIVIL
INDEX OF DRAWINGS

DRAWING NUMBER	DRAWING TITLE	DRAWING NUMBER	DRAWING TITLE
C-001	SEDIMENTATION AND EROSION CONTROL PLAN		
C-002	SITE PLAN		
C-003	DRAINAGE PLAN		
C-004	GRADING PLAN		
C-005	CALCIUM CHLORIDE DISPENSING SYSTEM		
C-006	CIVIL DETAILS		

THE DESIGN APPEARS TO CONFORM TO APPLICABLE CRITERIA. APPROVAL IS NOT TO BE CONSTRUED TO MEAN THAT ALL ASPECTS OF THE DESIGN HAVE BEEN PERSONALLY CHECKED BY THE UNDERSIGNED.

Theodore H. Nezames
2012.09.11 16:16:08
-04'00'

TRANSPORTATION PRINCIPAL ENGINEER

REV.	DATE	REVISION DESCRIPTION	SHEET NO.
-	-	-	-
-	-	-	-
-	-	-	-
-	-	-	-
-	-	-	-
-	-	-	-

THE INFORMATION, INCLUDING ESTIMATED QUANTITIES OF WORK, SHOWN ON THESE SHEETS IS BASED ON LIMITED INVESTIGATIONS BY THE STATE AND IS IN NO WAY WARRANTED TO INDICATE THE CONDITIONS OF ACTUAL QUANTITIES OF WORK WHICH WILL BE REQUIRED.

Plotted Date: 8/30/2012

DESIGNER/DRAFTER:

CHECKED BY:

SCALE AS NOTED

STATE OF CONNECTICUT
DEPARTMENT OF TRANSPORTATION

Filename: ...\FD_MSH_CIV_092_0549_C000.dgn

SIGNATURE/ BLOCK:

OFFICE OF ENGINEERING

APPROVED BY:

PROJECT TITLE:

SEA STREET
SALT STORAGE FACILITY

TOWN: NEW HAVEN

DRAWING TITLE: CIVIL LIST OF DRAWINGS

PROJECT NO. 92-549

DRAWING NO. C-000

SHEET NO. 05.01

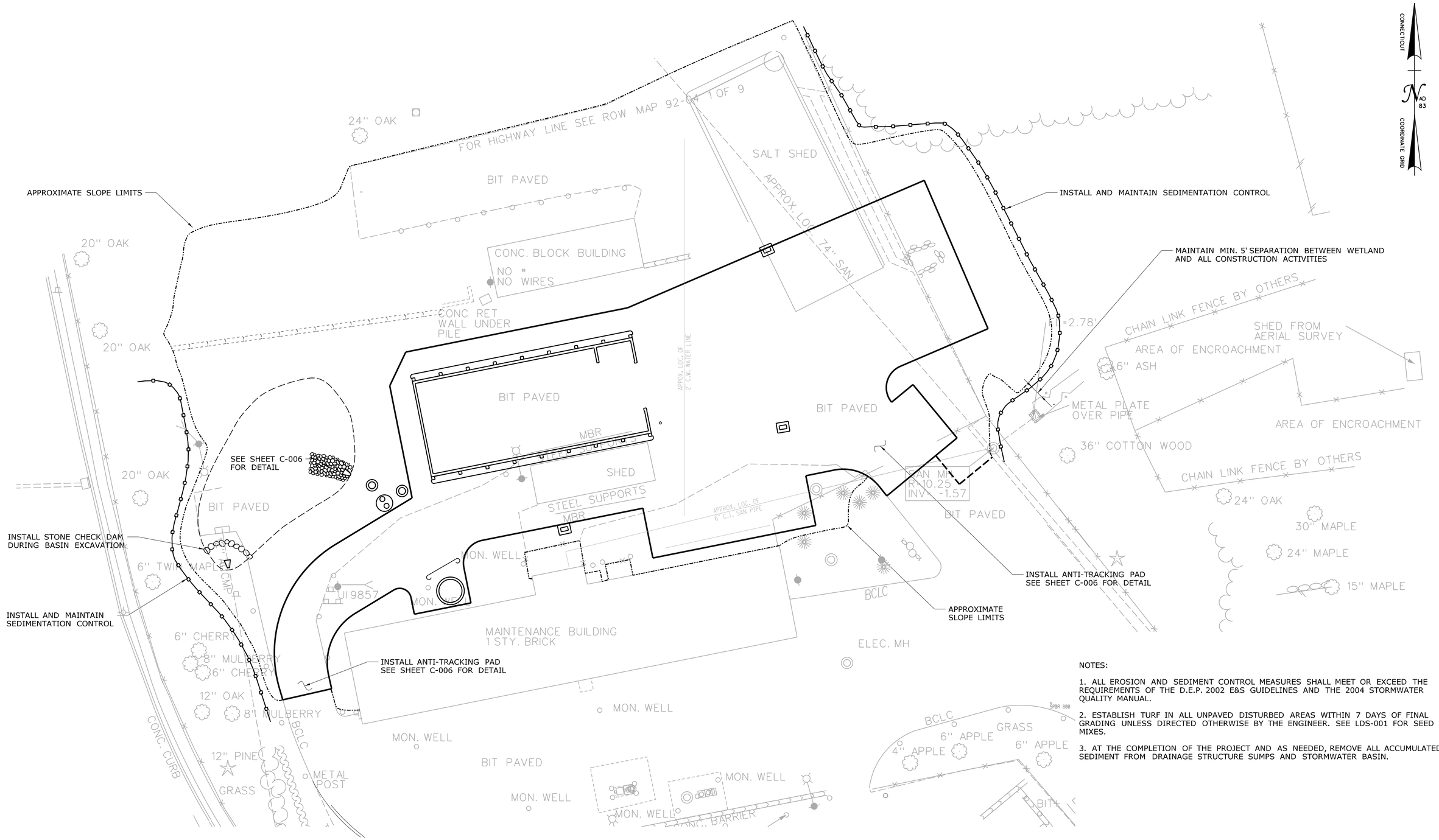

NOTES:

1. ALL EROSION AND SEDIMENT CONTROL MEASURES SHALL MEET OR EXCEED THE REQUIREMENTS OF THE D.E.P. 2002 E&S GUIDELINES AND THE 2004 STORMWATER QUALITY MANUAL.

2. ESTABLISH TURF IN ALL UNPAVED DISTURBED AREAS WITHIN 7 DAYS OF FINAL GRADING UNLESS DIRECTED OTHERWISE BY THE ENGINEER. SEE LDS-001 FOR SEED MIXES.

3. AT THE COMPLETION OF THE PROJECT AND AS NEEDED, REMOVE ALL ACCUMULATED SEDIMENT FROM DRAINAGE STRUCTURE SUMPS AND STORMWATER BASIN.

REV.	DATE	REVISION DESCRIPTION	SHEET NO.
-	-	-	-
-	-	-	-
-	-	-	-
-	-	-	-
-	-	-	-
-	-	-	-

THE INFORMATION, INCLUDING ESTIMATED QUANTITIES OF WORK, SHOWN ON THESE SHEETS IS BASED ON LIMITED INVESTIGATIONS BY THE STATE AND IS IN NO WAY WARRANTED TO INDICATE THE CONDITIONS OF ACTUAL QUANTITIES OF WORK WHICH WILL BE REQUIRED.

Plotted Date: 8/30/2012

DESIGNER/DRAFTER: **SLM**

CHECKED BY: **LM**

SCALE IN FEET 0 20 40

SCALE 1"=20'

STATE OF CONNECTICUT
DEPARTMENT OF TRANSPORTATION

Filename: ...\FD_MSH_SED_0092_0549_C001.dgn

SIGNATURE/BLOCK: **OFFICE OF ENGINEERING**

APPROVED BY: DATE:

PROJECT TITLE: **SEA STREET SALT STORAGE FACILITY**

TOWN: **NEW HAVEN**

DRAWING TITLE: **SEDIMENTATION AND EROSION CONTROL**

PROJECT NO. **92-549**

DRAWING NO. **C-001**

SHEET NO. **05.02**

NOTES:

1. ESTABLISH TURF IN ALL UNPAVED DISTURBED AREAS WITHIN 7 DAYS OF FINAL GRADING UNLESS DIRECTED OTHERWISE BY THE ENGINEER. SEE SHEET LDS-001 FOR SEED MIXES FOR TURF ESTABLISHMENT.

2. SEE SHEET SS-001 FOR SALT SHED CORNER COORDINATES.

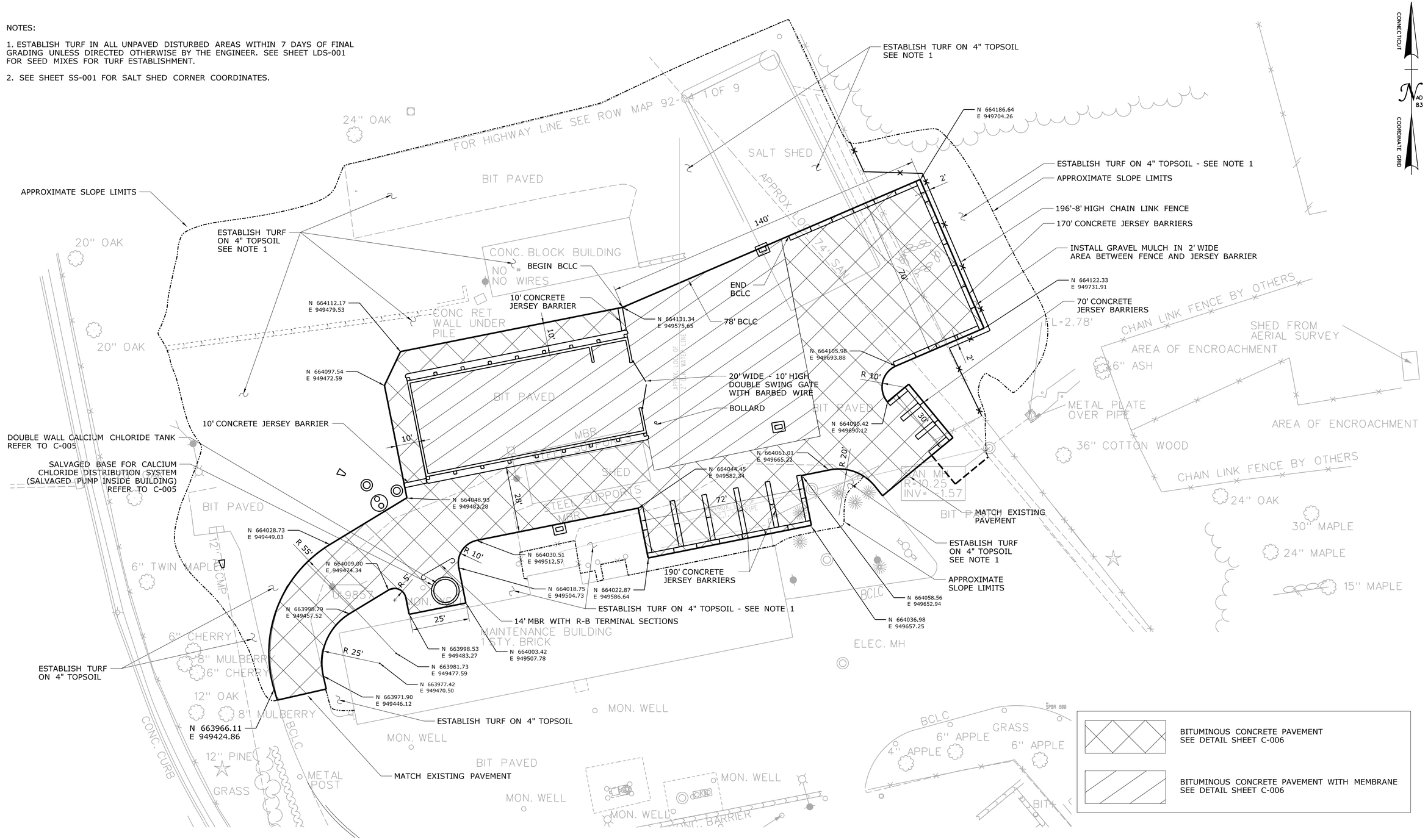

BITUMINOUS CONCRETE PAVEMENT SEE DETAIL SHEET C-006

BITUMINOUS CONCRETE PAVEMENT WITH MEMBRANE SEE DETAIL SHEET C-006

REV.	DATE	REVISION DESCRIPTION	SHEET NO.
-	-	-	-
-	-	-	-
-	-	-	-
-	-	-	-
-	-	-	-
-	-	-	-

THE INFORMATION, INCLUDING ESTIMATED QUANTITIES OF WORK, SHOWN ON THESE SHEETS IS BASED ON LIMITED INVESTIGATIONS BY THE STATE AND IS IN NO WAY WARRANTED TO INDICATE THE CONDITIONS OF ACTUAL QUANTITIES OF WORK WHICH WILL BE REQUIRED.

Plotted Date: 8/30/2012

DESIGNER/DRAFTER: SLM

CHECKED BY: LM

SCALE IN FEET 0 20 40

SCALE 1"=20'

STATE OF CONNECTICUT
DEPARTMENT OF TRANSPORTATION

Filename: ...\FD_MSH_CIV_0092_0549_C002.dgn

SIGNATURE/ BLOCK: OFFICE OF ENGINEERING

APPROVED BY: DATE:

PROJECT TITLE: SEA STREET SALT STORAGE FACILITY

TOWN: NEW HAVEN

DRAWING TITLE: SITE PLAN

PROJECT NO. 92-549

DRAWING NO. C-002

SHEET NO. 05.03

NOTES:

1. AT THE COMPLETION OF THE PROJECT, AND AS NEEDED, REMOVE ALL ACCUMULATED SEDIMENT FROM DRAINAGE STRUCTURE SUMPS AND FROM THE STORMWATER BASIN.

2. PROVIDE 12" NO. 3 STONE, WRAPPED IN GEOTEXTILE UNDER HYDRODYNAMIC SEPARATOR.

3. THE FOLLOWING VALUES SHOULD BE USED FOR THE DESIGN OF THE HYDRODYNAMIC SEPARATOR:
   WATER QUALITY FLOW VOLUME = 0.48 cfs
   SEDIMENT STORAGE CAPACITY = 1.5 cy

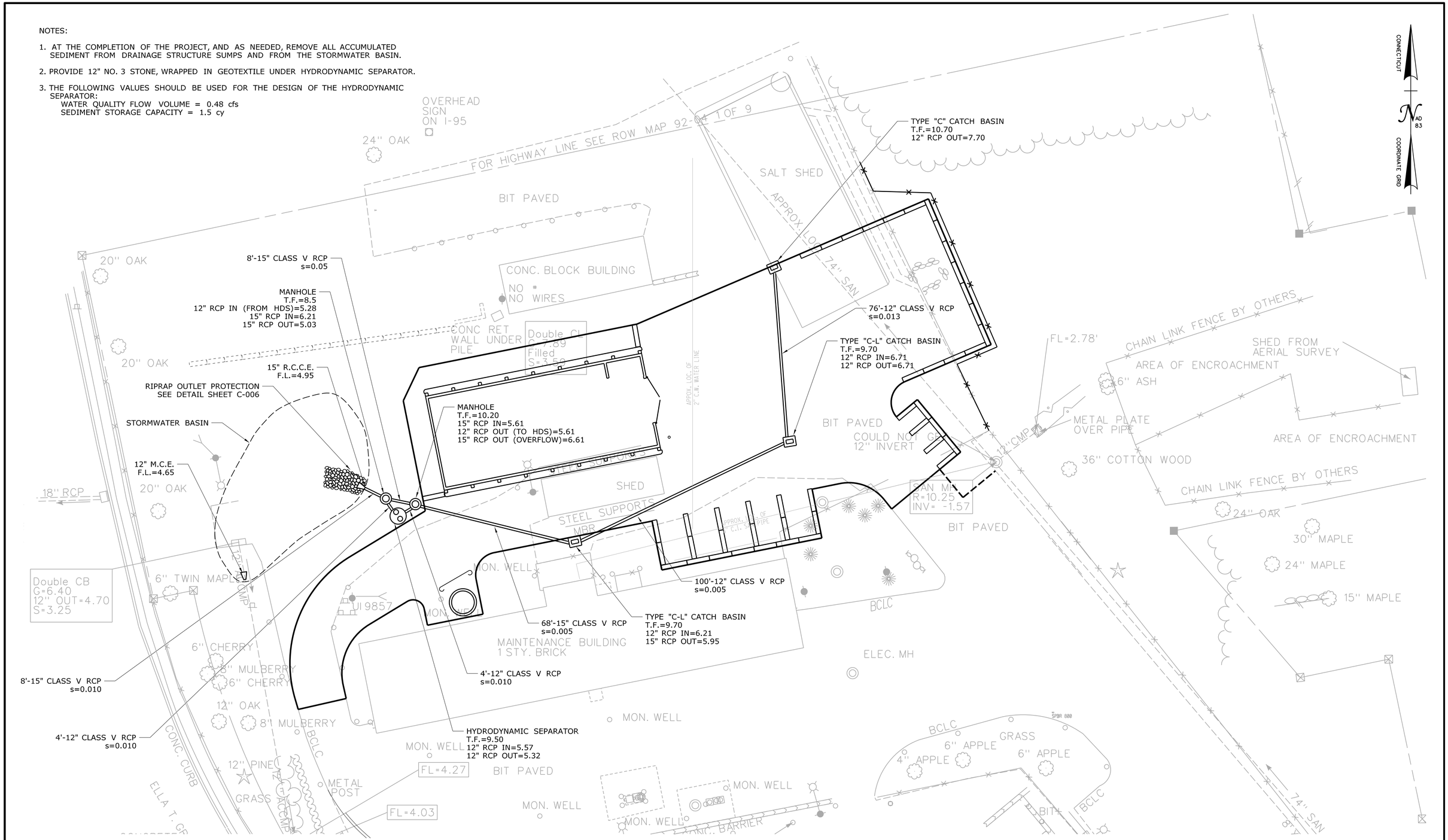

REV.	DATE	REVISION DESCRIPTION	SHEET NO.
-	-	-	-
-	-	-	-
-	-	-	-
-	-	-	-
-	-	-	-
-	-	-	-

THE INFORMATION, INCLUDING ESTIMATED QUANTITIES OF WORK, SHOWN ON THESE SHEETS IS BASED ON LIMITED INVESTIGATIONS BY THE STATE AND IS IN NO WAY WARRANTED TO INDICATE THE CONDITIONS OF ACTUAL QUANTITIES OF WORK WHICH WILL BE REQUIRED.

Plotted Date: 8/30/2012

DESIGNER/DRAFTER: **SLM**

CHECKED BY: **LM**

SCALE IN FEET
0 20 40
SCALE 1"=20'

STATE OF CONNECTICUT
DEPARTMENT OF TRANSPORTATION

Filename: ...\FD_MSH_DRG_0092_0549_C003.dgn

SIGNATURE/BLOCK:
OFFICE OF ENGINEERING
APPROVED BY: DATE:

PROJECT TITLE:
SEA STREET
SALT STORAGE FACILITY

TOWN: **NEW HAVEN**

DRAWING TITLE: **DRAINAGE PLAN**

PROJECT NO. **92-549**
DRAWING NO. **C-003**
SHEET NO. **05.04**

NOTES:

1. ALL EROSION AND SEDIMENTATION CONTROLS SHALL MEET OR EXCEED THE REQUIREMENTS OF THE D.E.P. 2002 EROSION AND SEDIMENTATION CONTROL GUIDELINES AND 2004 STORMWATER QUALITY MANUAL.

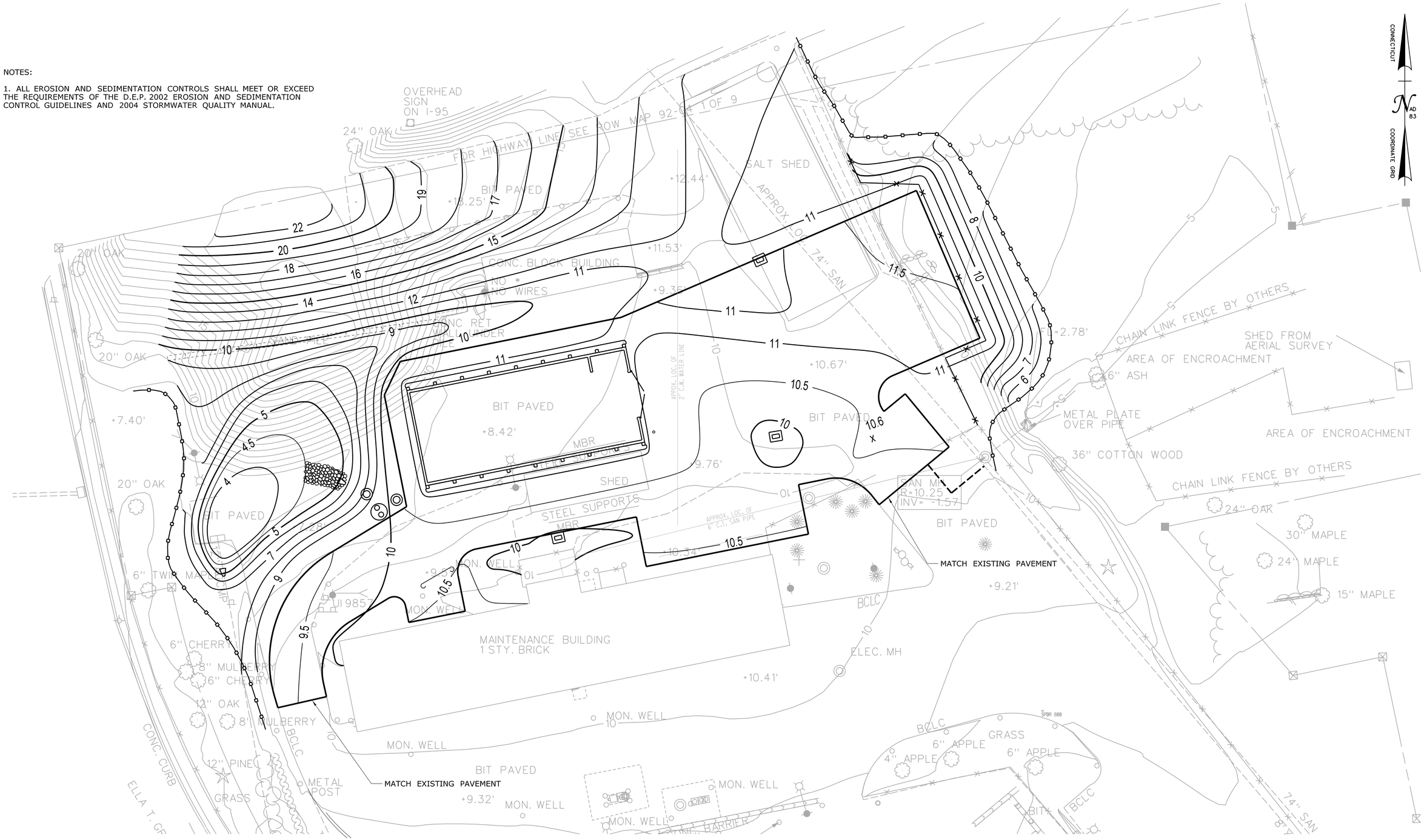

REV.	DATE	REVISION DESCRIPTION	SHEET NO.
-	-	-	-
-	-	-	-
-	-	-	-
-	-	-	-
-	-	-	-
-	-	-	-

THE INFORMATION, INCLUDING ESTIMATED QUANTITIES OF WORK, SHOWN ON THESE SHEETS IS BASED ON LIMITED INVESTIGATIONS BY THE STATE AND IS IN NO WAY WARRANTED TO INDICATE THE CONDITIONS OF ACTUAL QUANTITIES OF WORK WHICH WILL BE REQUIRED.

Plotted Date: 8/30/2012

DESIGNER/DRAFTER: **SLM**

CHECKED BY: **LM**

SCALE IN FEET

0 20 40

SCALE 1"=20'

STATE OF CONNECTICUT
DEPARTMENT OF TRANSPORTATION

Filename: ...\FD_MSH_GRD_0092_0549_C004.dgn

SIGNATURE/BLOCK: **OFFICE OF ENGINEERING**

APPROVED BY: DATE:

PROJECT TITLE: **SEA STREET SALT STORAGE FACILITY**

TOWN: **NEW HAVEN**

DRAWING TITLE: **GRADING PLAN**

PROJECT NO. **92-549**

DRAWING NO. **C-004**

SHEET NO. **05.05**

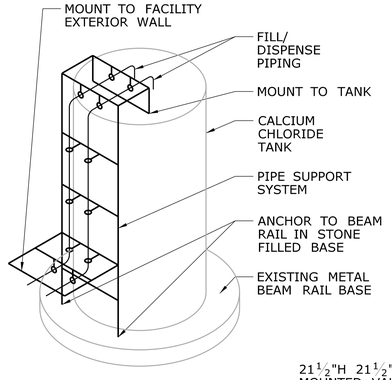

PIPE SUPPORT SYSTEM

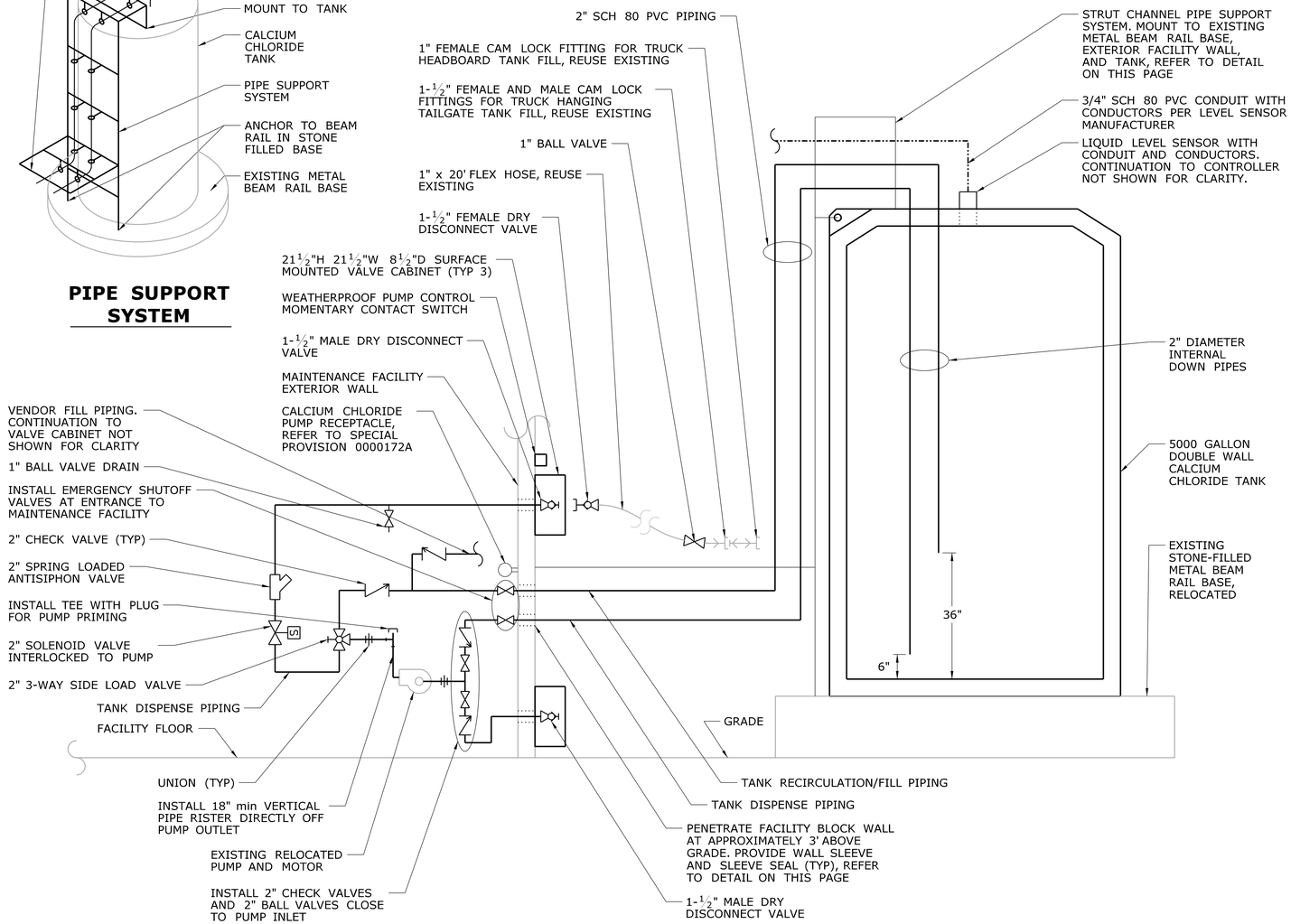

DOUBLE WALL CALCIUM CHLORIDE TANK PIPING DIAGRAM

NOTE: EQUIPMENT LOCATIONS SHOWN FOR CLARITY, SEE C-002 AND DETAIL ON THIS PAGE FOR SYSTEM LAYOUT

ELECTRICAL NOTES:

1. INSTALL CALCIUM CHLORIDE ELECTRICAL SYSTEM ON CIRCUIT MDP-40,42. THE LEVEL SENSOR CONTROLLER SHALL BE INSTALLED AHEAD OF THE CALCIUM CHLORIDE PUMP RECEPTACLE. PROVIDE ALL ASSOCIATED CONNECTIONS, CONDUIT AND FUSING.
2. PROVIDE 3/4" SCH 80 PVC CONDUIT WITH 2-#12 AWG., 1-#12 GROUND TO LEVEL SENSOR CONTROLLER. CONDUIT AND JUNCTION BOX INSIDE EXISTING MAINTENANCE FACILITY SHALL BE PER CONTRACT DOCUMENTS. PROVIDE 3/4" SCH 80 PVC CONDUIT FROM SENSOR TO CONTROLLER. SENSOR CONDUCTORS SHALL BE PER MANUFACTURER'S REQUIREMENTS.
3. PROVIDE SUPPORT FOR CONDUIT PER NEC REQUIREMENTS.
4. INSTALL 6"x6"x4" JUNCTION BOX INSIDE THE MAINTENANCE FACILITY. BOX SHALL BE COMPATIBLE TO ACCEPT RGSC (IF MOUNTED BELOW 10') OR EMT (IF MOUNTED ABOVE 10') AND CONVERT TO SCHEDULE 80 PVC.

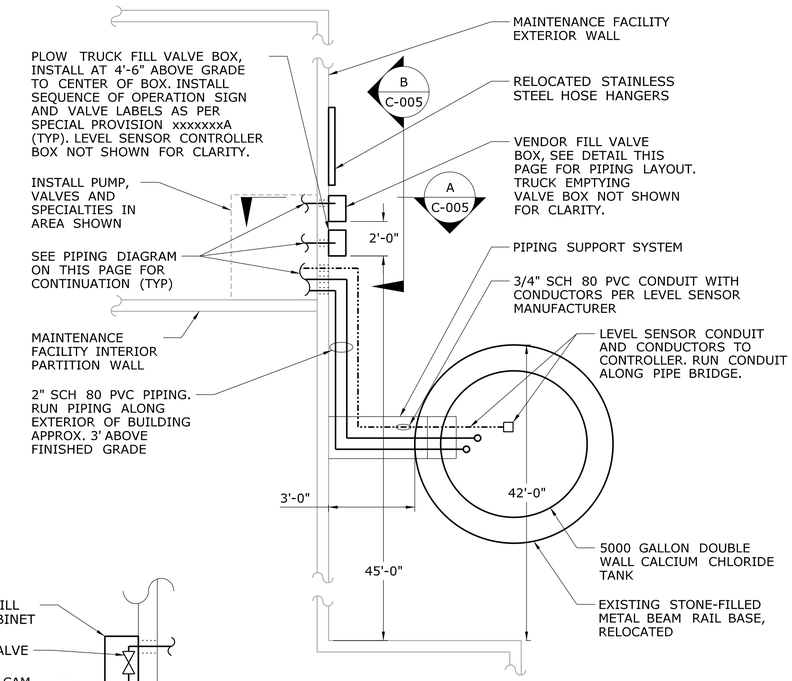

PLAN VIEW

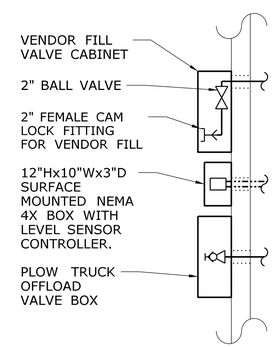

VALVE BOX SECTION VIEW

A C-005

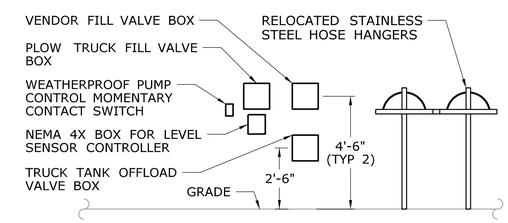

VALVE BOX ELEVATION VIEW

B C-005

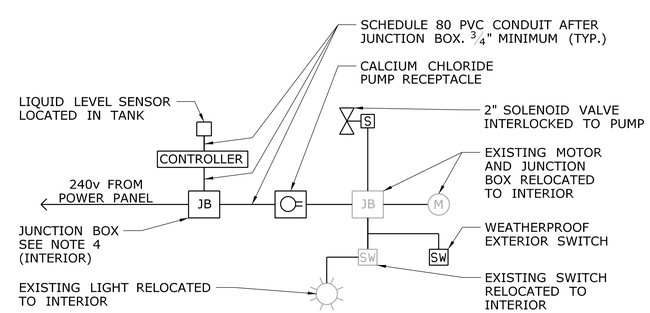

ELECTRICAL ONE LINE DIAGRAM

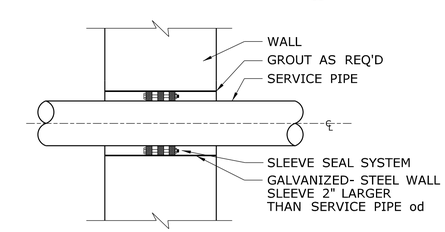

NOTE: SEAL ALL PENETRATIONS AS PER SPECIFICATIONS.

EXTERIOR WALL SLEEVE DETAIL

REV.	DATE	REVISION DESCRIPTION	SHEET NO.
-	-	-	-
-	-	-	-
-	-	-	-
-	-	-	-
-	-	-	-
-	-	-	-

THE INFORMATION, INCLUDING ESTIMATED QUANTITIES OF WORK, SHOWN ON THESE SHEETS IS BASED ON LIMITED INVESTIGATIONS BY THE STATE AND IS IN NO WAY WARRANTED TO INDICATE THE CONDITIONS OF ACTUAL QUANTITIES OF WORK WHICH WILL BE REQUIRED.

Plotted Date: 8/27/2012

DESIGNER/DRAFTER: NAR
CHECKED BY: MJS
SCALE AS NOTED

STATE OF CONNECTICUT
DEPARTMENT OF TRANSPORTATION

Filename: ...\FD_MSH_MEC_0092_0549_C005.dgn

SIGNATURE/ BLOCK: OFFICE OF ENGINEERING
APPROVED BY: DATE:

PROJECT TITLE: SEA STREET SALT STORAGE FACILITY

TOWN: NEW HAVEN

DRAWING TITLE: CALCIUM CHLORIDE DISPENSING SYSTEM

PROJECT NO. 92-549
DRAWING NO. C-005
SHEET NO. 05.06

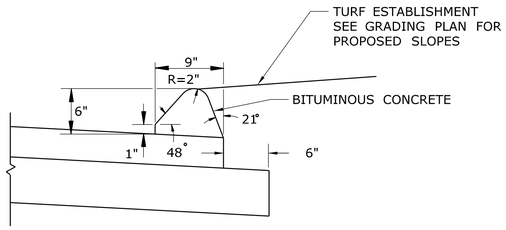

BITUMINOUS CONCRETE CURBING

NOT TO SCALE

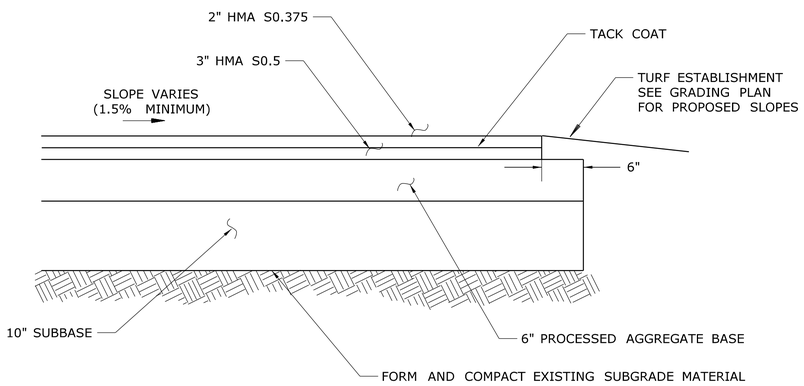

BITUMINOUS CONCRETE PAVEMENT

NOT TO SCALE

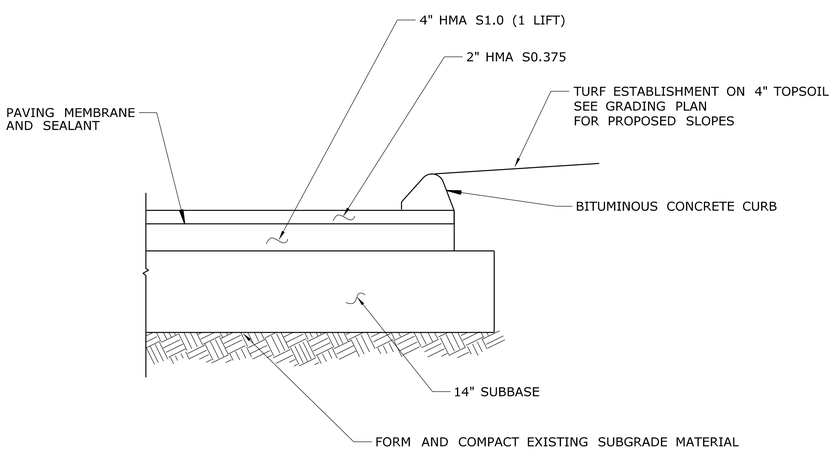

BITUMINOUS CONCRETE PAVING - WITH MEMBRANE

NOT TO SCALE

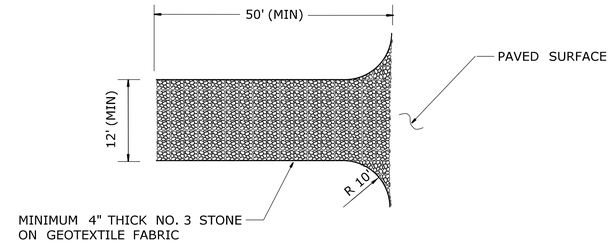

NOTES:

1. STONE SHALL BE REPLACED AS NEEDED TO ENSURE SUFFICIENT CAPTURE OF SEDIMENT.
2. ANY SEDIMENT TRACKED OFF-SITE SHALL BE IMMEDIATELY REMOVED BY THE CONTRACTOR.

ANTI-TRACKING PAD

NOT TO SCALE

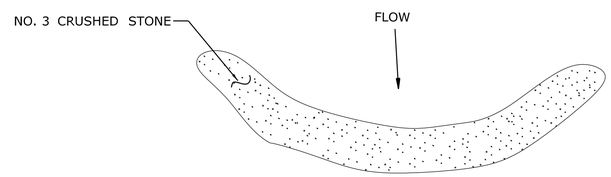

TOP VIEW

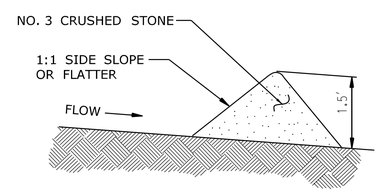

SIDE VIEW

NOTES:

1. STONE CHECK DAM SHALL EXTEND THE FULL WIDTH OF THE BASIN, PLUS 18 INCHES KEYED INTO THE BANKS ON EACH SIDE.
2. THE HEIGHT OF THE CENTER OF THE CHECK DAM SHALL BE 6 INCHES LOWER THAN THE HEIGHT OF THE OUTER EDGES.

STONE CHECK DAM

NOT TO SCALE

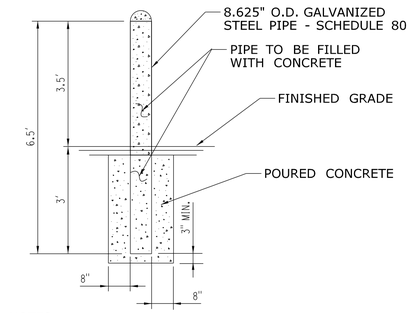

NOTES:

1. BOLLARDS SHALL BE COVERED WITH 1/4" YELLOW POLYETHYLENE COVER.
2. TRIM BOLLARD COVER TO FIT.

BOLLARD

NOT TO SCALE

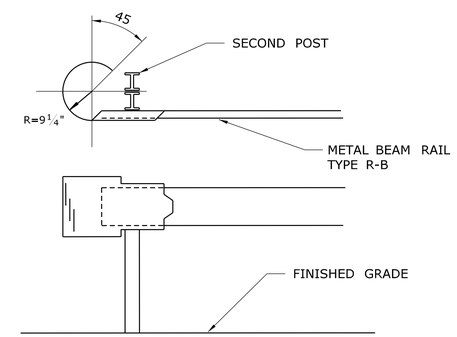

R-B TERMINAL SECTION

NOT TO SCALE

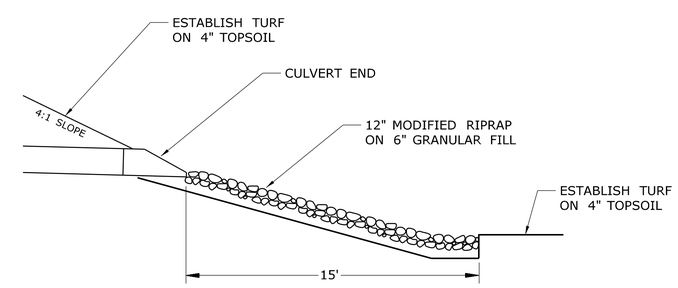

NOTE:

1. AT DISCHARGE POINT, PROVIDE 12" MODIFIED RIPRAP ON 6" GRANULAR FILL. RIPRAP SHALL EXTEND 3' ON EITHER SIDE OF THE CULVERT END AND 15' BEYOND THE CULVERT END.

RIPRAP OUTLET PROTECTION

NOT TO SCALE

REV.	DATE	REVISION DESCRIPTION	SHEET NO.
-	-	-	-
-	-	-	-
-	-	-	-
-	-	-	-
-	-	-	-
-	-	-	-

THE INFORMATION, INCLUDING ESTIMATED QUANTITIES OF WORK, SHOWN ON THESE SHEETS IS BASED ON LIMITED INVESTIGATIONS BY THE STATE AND IS IN NO WAY WARRANTED TO INDICATE THE CONDITIONS OF ACTUAL QUANTITIES OF WORK WHICH WILL BE REQUIRED.

Plotted Date: 8/30/2012

DESIGNER/DRAFTER: SLM
CHECKED BY: LM
SCALE AS NOTED

STATE OF CONNECTICUT
DEPARTMENT OF TRANSPORTATION

Filename: ...\FD_MSH_DET_0092_549_C006.dgn

SIGNATURE/BLOCK: OFFICE OF ENGINEERING
APPROVED BY: DATE:

PROJECT TITLE: SEA STREET SALT STORAGE FACILITY

TOWN: NEW HAVEN

DRAWING TITLE: CIVIL DETAILS

PROJECT NO. 92-549
DRAWING NO. C-006
SHEET NO. 05.07