CONNECTICUT DEPARTMENT OF TRANSPORTATION

Plans For

REPLACEMENT OF OVERHEAD SIGN SUPPORTS ON VARIOUS ROUTES STATEWIDE

Towns/Cities of

BRIDGEPORT, NORTH HAVEN, PLAINVILLE, NEW BRITAIN, HARTFORD, WEST HARTFORD, GLASTONBURY, MANCHESTER, WATERBURY

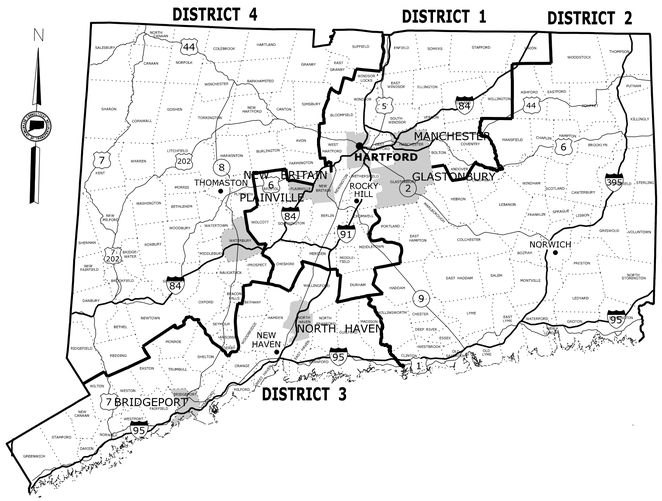

F.A.P. #	MAINTENANCE RESPONSIBILITY	PROJECT #
000R(733)	STATE OF CONNECTICUT	170-3065

GENERAL NOTES:

1. FEDERAL AID PROJECT NO. 000R(733)
2. CONSTRUCTION SPECIFICATIONS:
   Connecticut Department of Transportation, Standard Specifications for Roads, Bridges and Incidental Construction, Form 816, dated 2004; Supplemental Specifications, dated July 2012; and Special Provisions

DISCLAIMER

IT IS THE RESPONSIBILITY OF EACH BIDDER AND ALL OTHER INTERESTED PARTIES TO OBTAIN ALL BIDDING RELATED INFORMATION AND DOCUMENTS FROM OFFICAL SOURCES WITHIN THE DEPARTMENT.

PERSONS AND/OR ENTITIES WHICH REPRODUCE AND/OR MAKE SUCH INFORMATION AVAILABLE BY ANY MEANS ARE NOT AUTHORIZED BY THE DEPARTMENT TO DO SO AND MAY BE LIABLE FOR CLAIMS RESULTING FROM THE DISSEMINATION OF UNOFFICAL, INCOMPLETE AND/OR INACCURATE INFORMATION.

CONSTRUCTION NOTES

1. THE RELATIVE LOCATION OF EACH SIGN ON OVERHEAD STRUCTURE IS SHOWN READING ALPHABETICALLY FROM LEFT TO RIGHT AS VIEWED BY TRAFFIC.
2. ALL SIGN FOUNDATIONS SHALL BE FIELD STAKED AND THE LOCATIONS APPROVED BY AN ENGINEER FROM THE DIVISION OF TRAFFIC ENGINEERING BEFORE CONCRETE IS POURED.
3. THE REMOVAL OF EXISTING SHEET ALUMINUM SIGNS AND POSTS WILL BE PAID FOR UNDER ITEM #1206013 "REMOVAL OF EXISTING SIGNING".
4. THE REMOVAL AND OR RELOCATION/REINSTALLATION OF EXISTING OVERHEAD SIGNS WILL BE PAID FOR UNDER ITEM #1206025A "REMOVAL AND RELOCATION OF EXISTING OVERHEAD SIGNS."
5. THE CONTRACTOR SHALL CLEAR AND TRIM AS DIRECTED BY THE ENGINEER TO PROVIDE ADEQUATE SIGHTLINE TO THE SIGNS. THIS WORK SHALL BE PAID FOR UNDER ITEM #0952001A SELECTIVE CLEARING AND THINNING.
6. WHEN A SIGN IS TO BE REPLACED THE EXISTING SIGN IS NOT TO BE REMOVED UNTIL THE REPLACEMENT SIGN IS INSTALLED.

LIST OF SUBSETS

SUBSET NO.	SUBSET TITLE	*SUBSET SHEET COUNT
01	GENERAL	4
02	REVISIONS	1
03	TRAFFIC	10
04	STRUCTURAL	36
05	HIGHWAYS	4

*THE INITIAL SUBSET SHEET COUNT DOES NOT INCLUDE ADDENDUMS AND CHANGE ORDERS

LIST OF DRAWINGS SUBSET 01 - GENERAL

DRAWING TITLE	DRAWING NO.
TITLE SHEET	G-1
DETAILED ESTIMATE SHEET	EST-1
MISCELLANEOUS DETAILS	MDS-1
MISCELLANEOUS DETAILS	MDS-2

STANDARD CONVENTIONS

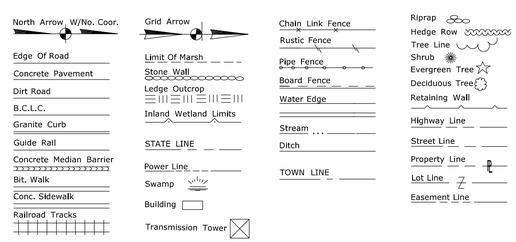

THE DESIGN APPEARS TO CONFORM TO APPLICABLE CRITERIA. APPROVAL IS NOT TO BE CONSTRUED TO MEAN THAT ALL ASPECTS OF THE DESIGN HAVE BEEN PERSONALLY CHECKED BY THE UNDERSIGNED.

Charles S. Harlow
2012.12.18 13:25:36-05'00'

SUBMITTED BY: TRANSPORTATION PRINCIPAL ENGINEER - TRAFFIC

Charles S. Harlow
2012.12.18 13:25:55-05'00'

APPROVAL RECOMMENDED BY: MANAGER OF TRAFFIC

James H. Norman
2013.01.04 07:44:48-05'00'

APPROVED BY: TRANSPORTATION ENGINEERING ADMINISTRATOR - JAMES H. NORMAN P.E.

Plans For

REPLACEMENT OF OVERHEAD SIGN SUPPORTS ON VARIOUS ROUTES STATEWIDE

Towns/Cities of

BRIDGEPORT, NORTH HAVEN, PLAINVILLE, NEW BRITAIN, HARTFORD, WEST HARTFORD, GLASTONBURY, MANCHESTER, WATERBURY

STATE PROJECT NO.

170-3065

DRAWING NO. **G-1**

SHEET NO. **01.01**

GENERAL ITEMS & TRAFFIC ENGINEERING ITEMS

PROJECT NO. 170-3065	0020801A ASBESTOS ABATEMENT L.S.	0020903A LEAD COMPLIANCE FOR EXTERIOR PAINTED SURFACES L.S.	0202317A DISPOSAL OF HAZARDOUS MATERIALS TON	0603802 STRUCTURAL STEEL - SIGN SUPPORTS CWT.	0952001A SELECTIVE CLEARING AND THINNING L.S.	0969060A CONSTRUCTION FIELD OFFICE, SMALL MO.	0971001A MAINTENANCE AND PROTECTION OF TRAFFIC L.S.	0975002 MOBILIZATION L.S.	0976002 BARRICADE WARNING LIGHTS - HIGH INTENSITY DAY	0978002 TRAFFIC DRUM EA.	0980001A CONSTRUCTION STAKING L.S.	0981100 42" TRAFFIC CONE EA.	1130000 HIGH MOUNTED INTERNALLY ILLUMINATED FLASHING ARROW DAY	1131002A REMOTE CONTROL CHANGEABLE MESSAGE SIGN DAY	1203109 SIDE MOUNTED SIGN FOUNDATION EA.	1204211A SIGN PANEL OVERLAY-PLAIN S.F.	1204221A SIGN PANEL OVERLAY-WITH COPY S.F.	1206013 REMOVAL OF EXISTING SIGNING L.S.	1206025A REMOVAL AND RELOCATION OF EXISTING OVERHEAD SIGNS L.S.	1207034A SIGN FACE - EXTRUDED ALUMINUM (TYPE IV RETROREFLECTIVE SHEETING) S.F.	1208928 SIGN FACE - SHEET ALUMINUM (TYPE III REFLECTIVE SHEETING) S.F.	1220013A CONSTRUCTION SIGNS - BRIGHT FLUORESCENT SHEETING S.F.	1806200 FURNISHING AND USE OF PORTABLE IMPACT ATTENUATION SYSTEM 1, TYPE D-1 HR.
P SITE 1																				108			
P SITE 2																				348			
P SITE 3																				770			
P SITE 4				15											2					144			
P SITE 5																				360			
P SITE 6				56											6	10				651			
P SITE 7																				348			
P SITE 8																				278			
P SITE 9				19											4		106			344	25		
SUBTOTAL	L.S.	L.S.	0	90	L.S.	0	L.S.	L.S.	0	0	L.S.	0	0	0	12	10	106	L.S.	L.S.	3351	25	0	0
UNASSIGNED	L.S.	L.S.	1	5	L.S.	19	L.S.	L.S.	300	40	L.S.	40	60	30	0	0	0	L.S.	L.S.	0	0	400	1000
TOTAL	L.S.	L.S.	1	95	L.S.	19	L.S.	L.S.	300	40	L.S.	40	60	30	12	10	106	L.S.	L.S.	3351	25	400	1000

P = FEDERAL AID PARTICIPATING
NP= FEDERAL AID NON PARTICIPATING
=FOR INTERNAL USE ONLY
NOT A LEGAL DEFINITION

A = ** See Special Provisions **

HIGHWAY ITEMS & STRUCTURE ITEMS

PROJECT NO. 170-3065	0205001 PROCESSED AGGREGATE C.Y.	0910188 R-B 350 BRIDGE ATTACHMENT - VERTICAL SHAPED PARAPET 10 GA EA.	0910194 METAL BEAM RAIL (TYPE R-B 350 10GA) L.F.	0910195 METAL BEAM RAIL (TYPE R-B 350 SYSTEM 5 10GA) L.F.	0910196 METAL BEAM RAIL (TYPE R-B 350 SYSTEM 6 10GA) L.F.	0910891 R-B 350 BRIDGE ATTACHMENT - 40 INCH SHAPED PARAPET 10 GA EA.	0911925 R-B END ANCHORAGE (TYPE 1-10GA) EA.	0912532 REMOVE METAL BEAM RAIL (TYPE R-I) L.F.	0918049 CONVERT THREE-CABLE GUIDE RAILING TO THREE-BEAM GUIDE RAILING SYSTEM - 2 (I-BEAM POSTS) L.F.	1201801A MONOTUBE BRIDGE SIGN STRUCTURE EA.	1201802A 4 CHORD TRUSS BRIDGE SIGN STRUCTURE EA.	1201804A 4 CHORD TRUSS CANTILEVER SIGN STRUCTURE EA.	1202239A OVERHEAD TRUSS SIGN SUPPORT FOUNDATION EA.	1202999A DRILLED SHAFT TRAFFIC STRUCTURE FOUNDATION EA.	1203902A STRUCTURE MOUNTED SIGN SUPPORT EA.	1803071A TYPE B IMPACT ATTENUATION SYSTEM (TANGENTIAL) EA.
P SITE 1	60	1	570	13	25		1	610				1		1		
P SITE 2	60		600			1	2			1				2		1
P SITE 3											1		2			
P SITE 4																
P SITE 5															1	
P SITE 6																
P SITE 7										1				2		
P SITE 8									312	1				2		
P SITE 9																
SUBTOTAL	120	1	1170	13	25	1	3	610	312	3	1	1	2	7	1	1
UNASSIGNED	0	0	0	0	0	0	0	0	0	0	0	0	0	0	0	0
TOTAL	120	1	1170	13	25	1	3	610	312	3	1	1	2	7	1	1

REV.	DATE	REVISION DESCRIPTION	SHEET NO.
-	-	-	-
-	-	-	-
-	-	-	-
-	-	-	-
-	-	-	-
-	-	-	-

THE INFORMATION, INCLUDING ESTIMATED QUANTITIES OF WORK, SHOWN ON THESE SHEETS IS BASED ON LIMITED INVESTIGATIONS BY THE STATE AND IS IN NO WAY WARRANTED TO INDICATE THE CONDITIONS OF ACTUAL QUANTITIES OF WORK WHICH WILL BE REQUIRED.

Plotted: 12/18/2012

DESIGNER/DRAFTER: JAM
CHECKED BY: BFS

STATE OF CONNECTICUT
DEPARTMENT OF TRANSPORTATION

Filename: ...\TR_MSH_0170_3065_EST.dgn

SIGNATURE/BLOCK: OFFICE OF ENGINEERING

PROJECT TITLE: REPLACEMENT OF OVERHEAD SIGN SUPPORTS ON VARIOUS ROUTES STATEWIDE

TOWN: VARIOUS

DRAWING TITLE: DETAILED ESTIMATE SHEET

PROJECT NO. 170-3065
DRAWING NO. EST-1
SHEET NO. 01.02

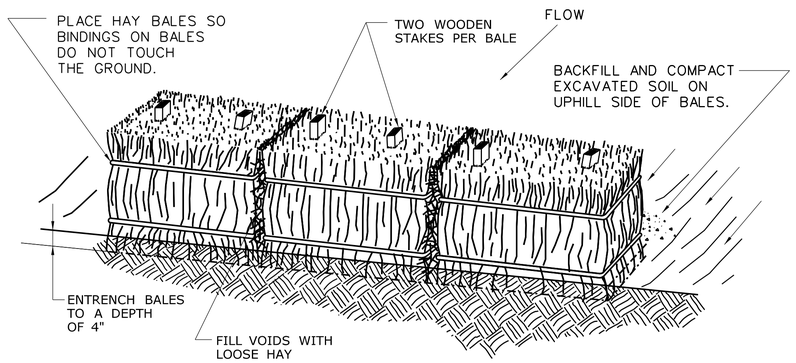

HAY BALE SYSTEM

GENERAL NOTES:

1. HAY BALES SHALL NOT BE USED IN A WATERCOURSE.
2. HAY BALES SHALL BE ENTRENCHED 4" AND TIGHTLY BUTTED TOPGETHER. REMOVE HEAVY BRUSH AND FILL ALL VOIDS WITH LOOSE HAY.
3. WOOD STAKES SHALL HAVE A MINIMUM CROSS-SECTION SIZE OF AT LEAST 1" x 1" AND MINIMUM LENGTH OF 4 FT.
4. CLEAN OUT ACCUMULATED SEDIMENT WHEN ONE-HALF (1/2) OF THE ORIGINAL HEIGHT OF THE HAY BALE FENCE, AS INSTALLED, BECOMES FILLED WITH SEDIMENT OR AS DIRECTED BY THE ENGINEER.
5. NOT TO BE USED IN THE VICINITY OF URBAN AND RESIDENTIAL AREAS.

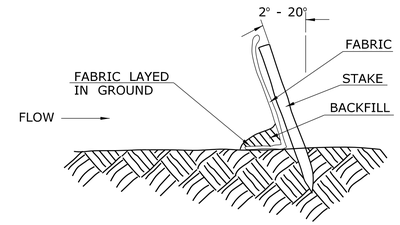

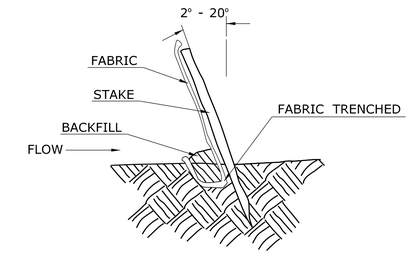

END VIEW

BACKFILLING GEOTEXTILE TOE

TRENCHING GEOTEXTILE TOE

GEOTEXTILE FENCE SYSTEM

GENERAL NOTES:

1. GEOTEXTILE FENCE SHOULD BE PLACED SO THE FENCE LEANS TOWARD THE SOURCE OF SEDIMENT.
2. MAXIMUM SPACING FOR WOODEN STAKES OR STEEL POSTS IS 10.0'.
3. WOOD STAKES SHALL HAVE A MINIMUM CROSS-SECTION SIZE OF 1.5" X 1.5" AND MINIMUM LENGTH OF 4 FT. STEEL POSTS SHALL BE AT LEAST 0.5 LB. PER FOOT WITH A MINIMUM LENGTH OF 4 FT.
4. WOODEN STAKES OR STEEL POSTS SHALL BE DRIVEN TO A MINIMUM OF 1' INTO THE GROUND.
5. 6" OF GEOTEXTILE SHALL BE BURIED BY BACKFILLING OR TRENCHING AND AT LEAST 2.5' IN HEIGHT OF GEOTEXTILE SHALL BE EXPOSED.
6. FABRIC SHALL BE JOINED ONLY AT A SUPPORT POST WITH A MINIMUM OF 6" OVERLAP AND SECURITY SEALED.
7. UPON RE-ESTABLISHMENT OF GROUND COVER IN DISTURBED AREAS AND WHEN DIRECTED BY THE ENGINEER, OR UPON FINAL INSPECTION FENCE AND ANY SEDIMENT SHALL BE REMOVED. AT NO TIME WILL THE FENCE REMAIN IN PLACE AFTER PROJECT COMPLETION.
8. GEOTEXTILE FENCE SHALL NOT BE USED IN A WATER COARSE.
9. ONLY GEOTEXTILE FROM THE DEPARTMENTS APPROVED PRODUCT LIST SHALL BE USED.
10. BACKFILLING OF GEOTEXTILE SHALL ONLY BE USED WHEN GROUND IS FROZEN OR WHERE OTHER OBSTRUCTIONS ARE ENCOUNTERED THAT PROHIBITE TRENCHING, IE, STUMPS OR ROCKS.
11. CLEAN OUT ACCUMULATION SEDIMENT WHEN ONE-HALF (1/2) OF THE ORIGINAL HEIGHT OF THE GEOTEXTILE FENCE, AS INSTALLED , BECOMES FILLED WITH SEDIMENT OR AS DIRECTED BY THE ENGINEER.

NOTE: THIS SHEET INCLUDED AS A GENERAL GUIDE FOR SEDIMENTATION AND EROSION CONTROL MEASURES. THE CONTRACTOR IS TO SUBMIT A PLAN AND FOLLOW THE BEST MANAGEMENT PRACTICES AS SET FORTH IN THE SPECIFICATIONS.

ALL SEDIMENTATION AND EROSION CONTROL AND RESTORATION OF SURROUNDING AREAS INCLUDING SEEDING IS CONSIDERED INCIDENTAL TO THE INSTALLATION OF SIGNS AND RELATED WORK AND IS INCLUDED IN THE GENERAL COST OF THE WORK.

REVISED: 12/10/07

REV.	DATE	REVISION DESCRIPTION	SHEET NO.
-	-	-	-
-	-	-	-
-	-	-	-
-	-	-	-
-	-	-	-
-	-	-	-

THE INFORMATION, INCLUDING ESTIMATED QUANTITIES OF WORK, SHOWN ON THESE SHEETS IS BASED ON LIMITED INVESTIGATIONS BY THE STATE AND IS IN NO WAY WARRANTED TO INDICATE THE CONDITIONS OF ACTUAL QUANTITIES OF WORK WHICH WILL BE REQUIRED.

Plotted Date: 12/18/2012

DESIGNER/DRAFTER: JAM
CHECKED BY: BFS
NTS

STATE OF CONNECTICUT
DEPARTMENT OF TRANSPORTATION

Filename: ...\TR_MSH_0170_3065_MDS-1_Erosion1_2007.dgn

SIGNATURE/BLOCK: OFFICE OF ENGINEERING
APPROVED BY: DATE:

PROJECT TITLE: REPLACEMENT OF OVERHEAD SIGN SUPPORTS ON VARIOUS ROUTES STATEWIDE

TOWN: VARIOUS

DRAWING TITLE: MISCELLANEOUS CONNECTICUT DETAIL SEDIMENTATION CONTROL SYSTEM

PROJECT NO. 170-3065
DRAWING NO. MDS-1
SHEET NO. 01.03

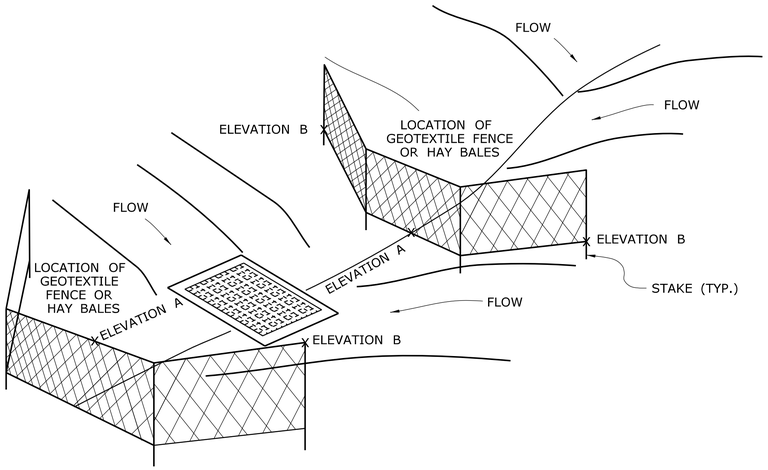

TREATMENT FOR A CATCH BASIN ON A SLOPE

(SEE NOTE 4)

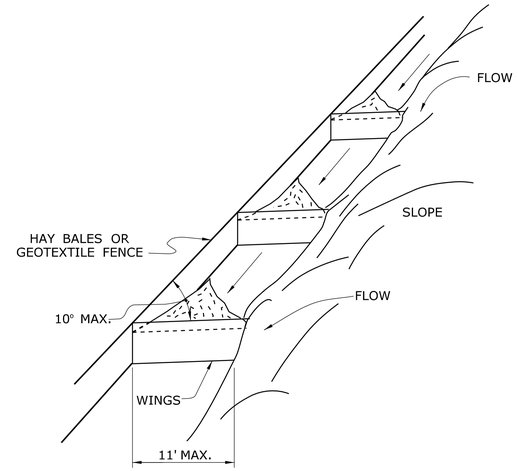

TREATMENT AT TOE OF SLOPE

(SEE NOTE 3)

GENERAL NOTES:

1. THE CONTRACTOR SHALL MAINTAIN THE EARTHEN BERM AS DIRECTED BY THE ENGINEER.
2. WHEN USING A SEDIMENTATION CONTROL SYSTEM ALONG THE TOE OF SLOPE, ADD WINGS TO PREVENT SEDIMENT FROM MOVING ALONG THE FENCE AND OFF THE SITE. MINIMUM SPACING FOR WINGS IS 25'.
3. CATCH BASIN ON SLOPE SHOULD NOT BE RINGED. THE SPACING OF SEDIMENTATION CONTROL SYSTEM SHALL VARY WITH SLOPE.
4. ELEVATION B = A + 12" MIN.

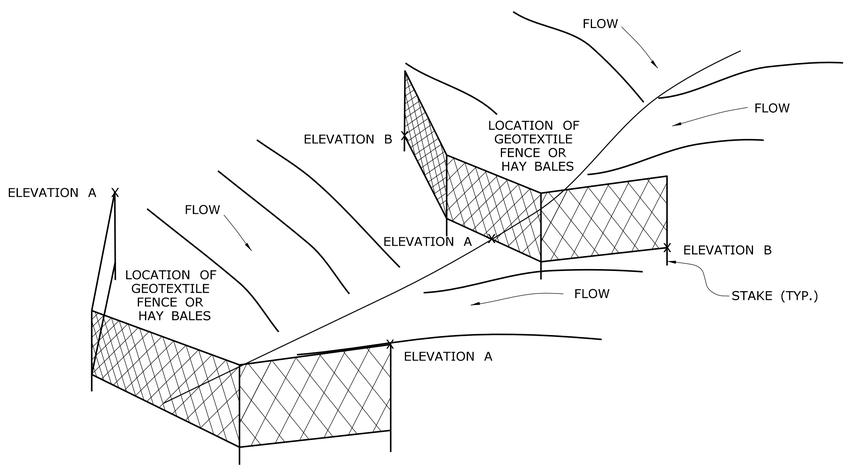

CHECK DAM

(SEE NOTE 4)

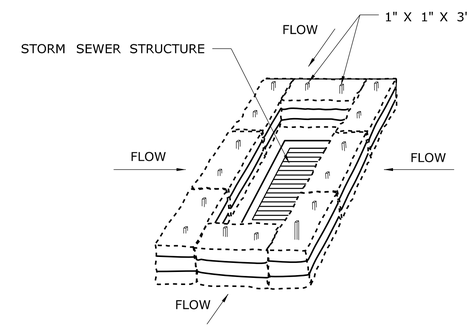

HAY BALE AT CATCH BASIN

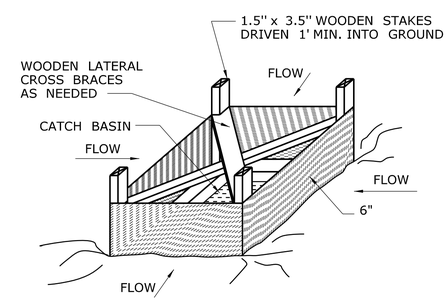

GEOTEXTILE FENCE AT CATCH BASIN

TREATMENT FOR A CATCH BASIN IN A DEPRESSION

NOTE: THIS SHEET INCLUDED AS A GENERAL GUIDE FOR SEDIMENTATION AND EROSION CONTROL MEASURES. THE CONTRACTOR IS TO SUBMIT A PLAN AND FOLLOW THE BEST MANAGEMENT PRACTICES AS SET FORTH IN THE SPECIFICATIONS.

ALL SEDIMENTATION AND EROSION CONTROL AND RESTORATION OF SURROUNDING AREAS INCLUDING SEEDING IS CONSIDERED INCIDENTAL TO THE INSTALLATION OF SIGNS AND RELATED WORK AND IS INCLUDED IN THE GENERAL COST OF THE WORK.

REVISED 12/12/07

REV.	DATE	REVISION DESCRIPTION	SHEET NO.

THE INFORMATION, INCLUDING ESTIMATED QUANTITIES OF WORK, SHOWN ON THESE SHEETS IS BASED ON LIMITED INVESTIGATIONS BY THE STATE AND IS IN NO WAY WARRANTED TO INDICATE THE CONDITIONS OF ACTUAL QUANTITIES OF WORK WHICH WILL BE REQUIRED.

Plotted Date: 12/18/2012

DESIGNER/DRAFTER: JAM
CHECKED BY: BFS
NTS

STATE OF CONNECTICUT
DEPARTMENT OF TRANSPORTATION

Filename: ...\TR_MSH_0170_3065_MDS-2_Erosion2_2007.dgn

SIGNATURE/BLOCK: OFFICE OF ENGINEERING
APPROVED BY: DATE:

PROJECT TITLE: REPLACEMENT OF OVERHEAD SIGN SUPPORTS ON VARIOUS ROUTES STATEWIDE

TOWN: VARIOUS

DRAWING TITLE: MISCELLANEOUS CONNECTICUT DETAIL SEDIMENTATION CONTROL TREATMENTS

PROJECT NO. 170-3065
DRAWING NO. MDS-2
SHEET NO. 01.04