04 - STRUCTURAL SUBSET
INDEX OF DRAWINGS

DRAWING NUMBER	DRAWING TITLE	DRAWING NUMBER	DRAWING TITLE	DRAWING NUMBER	DRAWING TITLE
S-1	SHEET INDEX	S-27	4 CHORD TRUSS BRIDGE DETAILS-1		
S-2	STRUCTURE MOUNTED SIGN SUPPORT - 1	S-28	4 CHORD TRUSS BRIDGE DETAILS-2		
S-3	STRUCTURE MOUNTED SIGN SUPPORT - 2	S-29	4 CHORD TRUSS BRIDGE DETAILS-3		
S-4	STRUCTURE MOUNTED SIGN SUPPORT - 3	S-30	TRUSS BRIDGE STRUCTURE FOUNDATION		
S-5	STRUCTURE MOUNTED SIGN SUPPORT - 4	S-31	BREAKAWAY SIGN SUPPORTS GENERAL NOTES		
S-6	STRUCTURE MOUNTED SIGN SUPPORT - 5	S-32	BREAKAWAY SIGN SUPPORTS POST SELECTION TABLE 1		
S-7	STRUCTURE MOUNTED SIGN SUPPORT - 6	S-33	BREAKAWAY SIGN SUPPORTS POST SELECTION TABLE 2		
S-8	STRUCTURE MOUNTED SIGN SUPPORT - 7	S-34	BREAKAWAY SIGN SUPPORTS FOUNDATION DETAILS		
S-9	STRUCTURE MOUNTED SIGN SUPPORT - 8	S-35	BREAKAWAY SIGN SUPPORTS BRACKET DETAILS		
S-10	STRUCTURE MOUNTED SIGN SUPPORT - 9	S-36	BREAKAWAY SIGN SUPPORTS HINGE DETAILS		
S-11	STRUCTURE MOUNTED SIGN SUPPORT - 10				
S-12	STRUCTURE MOUNTED SIGN SUPPORT - 11				
S-13	STRUCTURE MOUNTED SIGN SUPPORT - 12				
S-14	STRUCTURE MOUNTED SIGN SUPPORT - 13				
S-15	EXTRUDED ALUMINUM SIGN PANEL CONNECTION DETAILS				
S-16	EXTRUDED ALUMINUM SIGN PANEL MANUFACTURING DETAILS				
S-17	4 CHORD TRUSS CANTILEVER GENERAL PLAN				
S-18	4 CHORD TRUSS CANTILEVER DETAILS-1				
S-19	4 CHORD TRUSS CANTILEVER DETAILS-2				
S-20	4 CHORD TRUSS CANTILEVER DETAILS-3				
S-21	MONOTUBE BRIDGE TYPE SIGN STRUCTURE				
S-22	MONOTUBE BRIDGE TYPE DETAILS-1				
S-23	MONOTUBE BRIDGE TYPE DETAILS-2				
S-24	MONOTUBE BRIDGE TYPE DETAILS-3				
S-25	DRILLED SHAFT DETAILS				
S-26	4 CHORD TRUSS BRIDGE GENERAL PLAN				

THE DESIGN APPEARS TO CONFORM TO APPLICABLE CRITERIA. APPROVAL IS NOT TO BE CONSTRUED TO MEAN THAT ALL ASPECTS OF THE DESIGN HAVE BEEN PERSONALLY CHECKED BY THE UNDERSIGNED.

Rabih M. Barakat

Digitally signed by Rabih M. Barakat
DN: CN=Rabih M. Barakat, O=State of Connecticut, E=Rabih.Barakat@ct.gov, OU=Department of Transportation, OU=Division of Bridges and Facilities, OU=Bridge Design, L=Newington, S=Connecticut, C=US
Date: 2012.12.18 15:34:42-05'00'

TRANSPORTATION PRINCIPAL ENGINEER

REV.	DATE	REVISION DESCRIPTION	SHEET NO.

THE INFORMATION, INCLUDING ESTIMATED QUANTITIES OF WORK, SHOWN ON THESE SHEETS IS BASED ON LIMITED INVESTIGATIONS BY THE STATE AND IS IN NO WAY WARRANTED TO INDICATE THE CONDITIONS OF ACTUAL QUANTITIES OF WORK WHICH WILL BE REQUIRED.

Plotted Date: 12/17/2012

DESIGNER/DRAFTER: MDG
CHECKED BY: RDD
SCALE AS NOTED

STATE OF CONNECTICUT
DEPARTMENT OF TRANSPORTATION

Filename: ...\Sheet Index.dgn

SIGNATURE/BLOCK:
OFFICE OF ENGINEERING
APPROVED BY:

PROJECT TITLE:
REPLACEMENT OF OVERHEAD SIGN SUPPORTS ON VARIOUS ROUTES STATEWIDE

TOWN: VARIOUS

DRAWING TITLE: SHEET INDEX

PROJECT NO. 170-3065
DRAWING NO. S-1
SHEET NO. 04.01

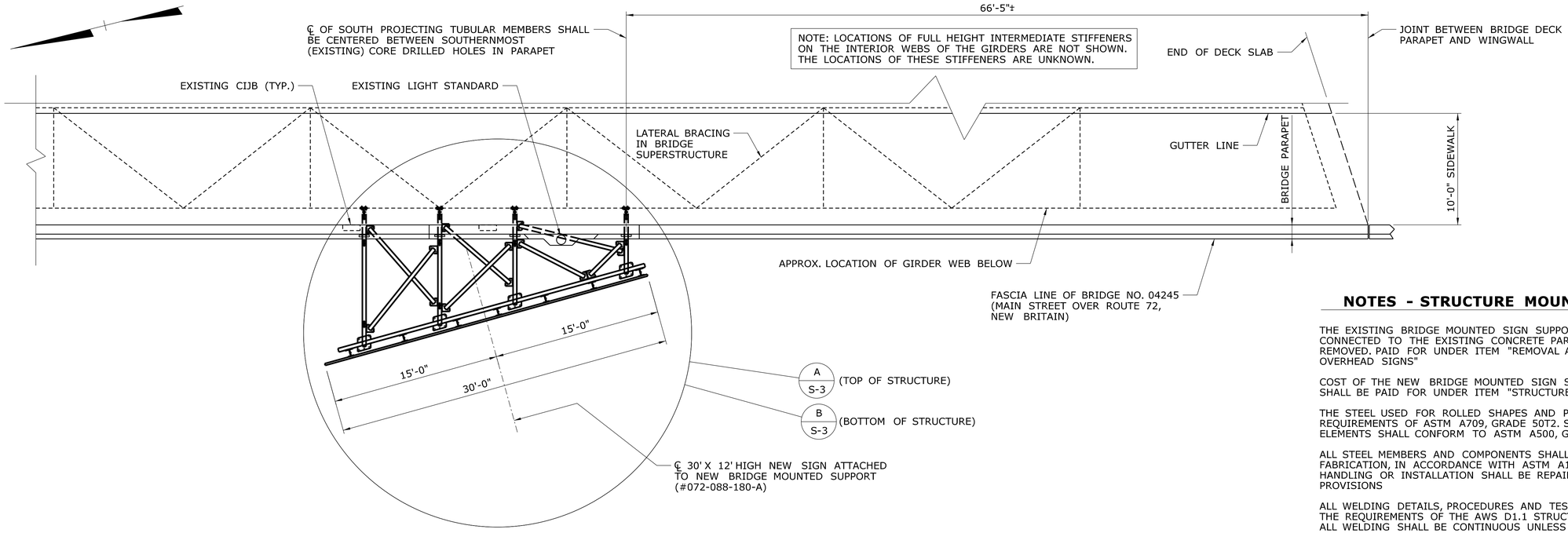

PLAN VIEW - SITE NO. 5

SCALE: $^{3}/_{16}$" = 1'-0"

GENERAL NOTES

SPECIFICATIONS: CONNECTICUT DEPARTMENT OF TRANSPORTATION FORM 816 DATED 2004, SUPPLEMENTAL SPECIFICATIONS DATED JULY 2012 AND SPECIAL PROVISIONS

DESIGN SPECIFICATIONS: AASHTO STANDARD SPECIFICATIONS FOR STRUCTURAL SUPPORTS FOR HIGHWAY SIGNS, LUMINARIES AND TRAFFIC SIGNALS - 2009, WITH THE LAST INTERIM SPECIFICATIONS , AS SUPPLEMENTED BY THE CONNECTICUT DEPARTMENT OF TRANSPORTATION BRIDGE DESIGN MANUAL-2003.

EXISTING DIMENSIONS: ALL DIMENSIONS OF THE EXISTING STRUCTURES SHOWN ON THESE PLANS ARE FOR GENERAL REFERENCE ONLY. THEY HAVE BEEN TAKEN FROM THE ORIGINAL DESIGN DRAWINGS AND ARE NOT GUARANTEED. THE CONTRACTOR SHALL TAKE ALL FIELD MEASUREMENTS NECESSARY TO ASSURE THE PROPER FIT OF THE FINISHED WORK AND SHALL ASSUME FULL RESPONSIBILITY FOR THEIR ACCURACY. WHEN SHOP DRAWINGS BASED ON FIELD MEASUREMENTS ARE SUBMITTED FOR APPROVAL, THE FIELD MEASUREMENTS SHALL ALSO BE SUBMITTED FOR REFERENCE BY THE REVIEWER.

NOTES - STRUCTURE MOUNTED SIGN SUPPORT

THE EXISTING BRIDGE MOUNTED SIGN SUPPORT, CONSISTING OF WELDED ANGLES, AND CONNECTED TO THE EXISTING CONCRETE PARAPET AND THE FASCIA GIRDER, SHALL BE REMOVED. PAID FOR UNDER ITEM "REMOVAL AND RELOCATION OF EXISTING OVERHEAD SIGNS"

COST OF THE NEW BRIDGE MOUNTED SIGN SUPPORT, EXCLUSIVE OF THE SIGN PANELS, SHALL BE PAID FOR UNDER ITEM "STRUCTURE MOUNTED SIGN SUPPORT"

THE STEEL USED FOR ROLLED SHAPES AND PLATES SHALL CONFORM TO THE REQUIREMENTS OF ASTM A709, GRADE 50T2. STEEL FOR THE TUBULAR ELEMENTS SHALL CONFORM TO ASTM A500, GRADE B (MINIMUM Fy = 46,000 PSI)

ALL STEEL MEMBERS AND COMPONENTS SHALL BE HOT-DIP GALVANIZED, AFTER FABRICATION, IN ACCORDANCE WITH ASTM A123. ANY GALVANIZING DAMAGED DURING HANDLING OR INSTALLATION SHALL BE REPAIRED IN ACCORDANCE WITH THE SPECIAL PROVISIONS

ALL WELDING DETAILS, PROCEDURES AND TESTING METHODS SHALL CONFORM TO THE REQUIREMENTS OF THE AWS D1.1 STRUCTURAL WELDING CODE - STEEL. ALL WELDING SHALL BE CONTINUOUS UNLESS NOTED OTHERWISE.

CARRIAGE BOLTS SHALL CONFORM TO ASTM A307 OR STRONGER AND SHALL BE GALVANIZED IN ACCORDANCE WITH ASTM A153.

ALL HIGH STRENGTH BOLTS SHALL CONFORM TO ASTM A325, TYPE 1. NUTS SHALL CONFORM TO ASTM A563, GRADE DH. CIRCULAR, FLAT, HARDENED STEEL WASHERS SHALL CONFORM TO ASTM F436. THE BOLTS, NUTS AND WASHERS SHALL BE GALVANIZED IN ACCORDANCE WITH ASTM A153 OR ASTM B695, GRADE 50.

ALL BOLT HOLES SHALL BE STANDARD HOLES ($^{1}/_{16}$" LARGER THAN THE BOLT DIAMETER), UNLESS OTHERWISE NOTED. HOLES MAY BE FIELD DRILLED, PROVIDED SHOP DRILLED HOLES ARE USED AS TEMPLATES FOR THE FIELD DRILLED HOLES.

ALL HIGH STRENGTH BOLTS SHALL HAVE HARDENED WASHERS PLACED UNDER ALL ELEMENTS (NUT OR BOLT HEAD) TURNED DURING TENSIONING.

CARRIAGE BOLTS SHALL HAVE A SINGLE HARDENED WASHER PLACED BETWEEN THE BEVELED PLATE AND THE TURNED ELEMENT (NUT)

ALL BOLTS SHALL BE LUBRICATED PRIOR TO INSTALLATION TO ENSURE FREE ROTATION OF THE NUT ON THE BOLT THREAD.

THE CONTRACTOR SHALL TAKE THE PROPER PRECAUTIONS TO ENSURE THE STABILITY OF ALL STRUCTURAL ELEMENTS UNTIL THE TOTAL STRUCTURE IS ERECTED.

BOLTING REQUIREMENTS FOR THE STRUCTURE MOUNTED SIGN SUPPORT ARE AS FOLLOWS:

NEW STEEL TO NEW STEEL:

BOTH GALVANIZED FAYING SURFACES SHALL BE LIGHTLY SCORED BY WIRE BRUSHING AFTER GALVANIZING AND PRIOR TO ASSEMBLY. AFTER THE BOLTS HAVE BEEN FULLY TENSIONED, THE FAYING SURFACES SHALL BE IN FIRM CONTACT.

NEW STEEL TO EXISTING PAINTED STEEL:

THE NEW GALVANIZED FAYING SURFACE SHALL BE LIGHTLY SCORED BY WIRE BRUSHING AFTER GALVANIZING AND PRIOR TO ASSEMBLY. ALL PACK OR LAMINAR RUST SHALL BE REMOVED FROM EXISTING FAYING SURFACES THAT ARE TO REMAIN AND WILL BE ATTACHED TO THE NEW STRUCTURAL STEEL. BURRS OR OTHER IRREGULARITIES THAT PREVENT SOLID SEATING OF THE FAYING SURFACES SHALL BE REMOVED. THE FAYING SURFACE OF THE EXISTING STEEL SHALL BE FREE OF DIRT OR OTHER FOREIGN MATERIAL. LOOSE OR NON-ADHERENT PAINT SHALL BE REMOVED, BUT TIGHTLY ADHERENT PAINT NEED NOT BE REMOVED. AFTER THE BOLTS HAVE BEEN FULLY TENSIONED, THE FAYING SURFACES SHALL BE IN FIRM CONTACT.

REV.	DATE	REVISION DESCRIPTION	SHEET NO.

THE INFORMATION, INCLUDING ESTIMATED QUANTITIES OF WORK, SHOWN ON THESE SHEETS IS BASED ON LIMITED INVESTIGATIONS BY THE STATE AND IS IN NO WAY WARRANTED TO INDICATE THE CONDITIONS OF ACTUAL QUANTITIES OF WORK WHICH WILL BE REQUIRED.

Plotted Date: 12/17/2012

DESIGNER/DRAFTER: JK
CHECKED BY: RDD
SCALE AS NOTED

STATE OF CONNECTICUT
DEPARTMENT OF TRANSPORTATION

Filename: ...\01703065_SB_Structure Mounted Support-1.dgn

SIGNATURE/BLOCK:
OFFICE OF ENGINEERING
APPROVED BY:

PROJECT TITLE:
REPLACEMENT OF OVERHEAD SIGN SUPPORTS ON VARIOUS ROUTES STATEWIDE

TOWN: NEW BRITAIN

DRAWING TITLE:
STRUCTURE MOUNTED SIGN SUPPORT - 1

PROJECT NO. 170-3065
DRAWING NO. S-2
SHEET NO. 04.02

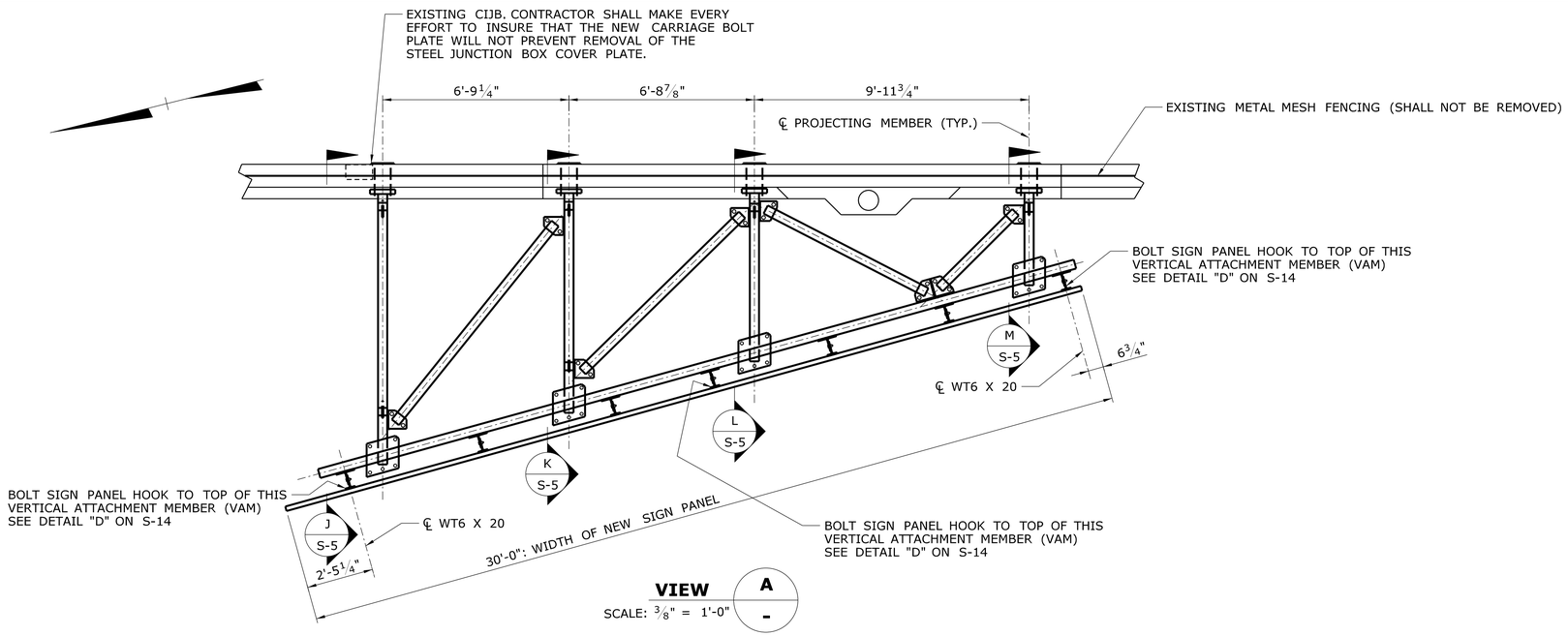

VIEW A
SCALE: 3/8" = 1'-0"

NOTES FOR BOLTING TO GIRDER WEB
DIMENSIONS "X" AND "Y" REPRESENT THE LOCATIONS OF THE EXISTING HOLES IN THE GIRDER WEB. THESE DIMENSIONS, AND THE SIZE OF THE EXISTING HOLES, ARE UNKNOWN. HOLES SHALL BE FIELD DRILLED IN THE WT 6 X 20 AND THE BACKING PLATE USING THE EXISTING HOLES AS TEMPLATES. ALTERNATIVELY, THE HOLES IN THE WT AND THE BACKING PLATE MAY BE SHOP DRILLED PROVIDED THE EXISTING HOLE LOCATIONS ARE ACCURATELY PREMEASURED. SIZE OF THE HIGH STRENGTH BOLTS INSTALLED THRU THE WEB OF THE FASCIA GIRDER SHALL BE DETERMINED IN ACCORDANCE WITH THE FOLLOWING: -MINIMUM SIZE OF THE NEW BOLTS SHALL BE 3/4" -BOLT SIZE SHALL BE 1/16" LESS THAN THE HOLE DIAMETERS. IF THE SIZE OF THE EXISTING HOLES IS SUCH THAT A 3/4" BOLT CANNOT BE INSTALLED THEN THE HOLE(S) SHALL BE ENLARGED TO 13/16" DIAMETER TO ENABLE INSTALLATION OF 3/4" MINIMUM SIZE BOLTS.

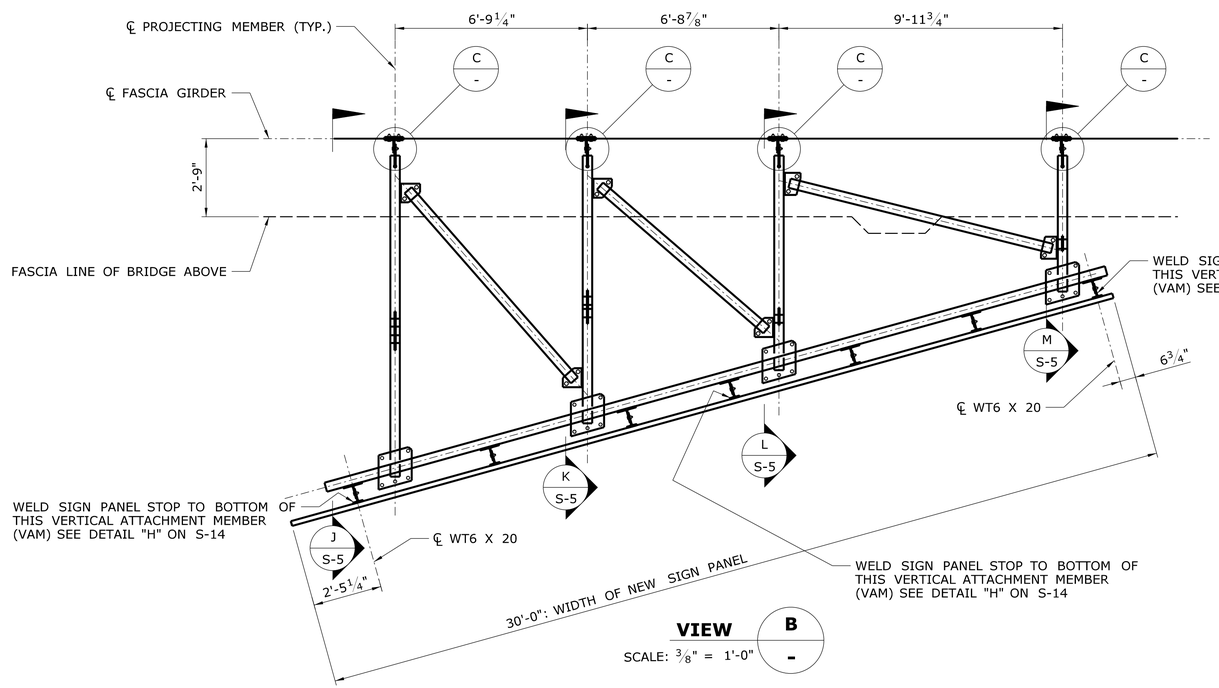

VIEW B
SCALE: 3/8" = 1'-0"

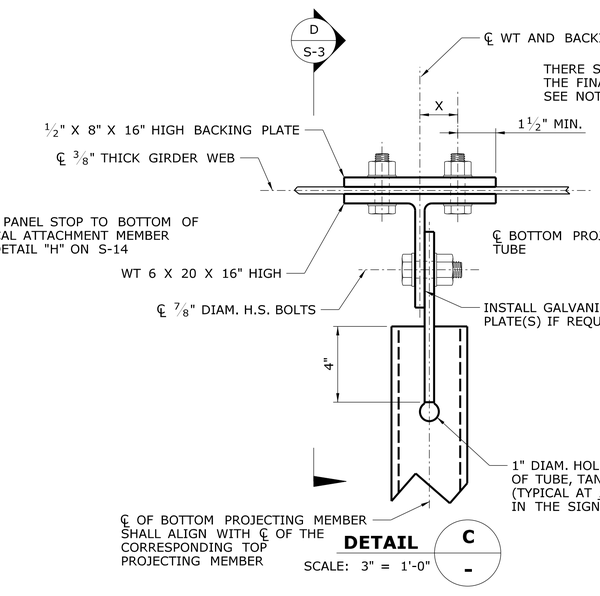

DETAIL C
SCALE: 3" = 1'-0"

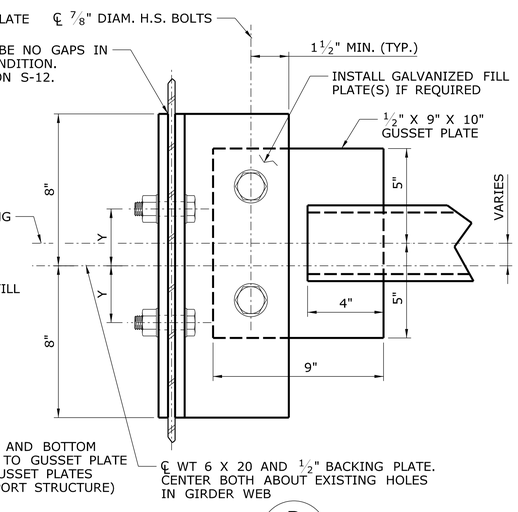

SECTION D
SCALE: 3" = 1'-0"

REV.	DATE	REVISION DESCRIPTION	SHEET NO.

THE INFORMATION, INCLUDING ESTIMATED QUANTITIES OF WORK, SHOWN ON THESE SHEETS IS BASED ON LIMITED INVESTIGATIONS BY THE STATE AND IS IN NO WAY WARRANTED TO INDICATE THE CONDITIONS OF ACTUAL QUANTITIES OF WORK WHICH WILL BE REQUIRED.

Plotted Date: 12/17/2012

DESIGNER/DRAFTER: MDG
CHECKED BY: RDD
SCALE AS NOTED

STATE OF CONNECTICUT
DEPARTMENT OF TRANSPORTATION

Filename: ...\01703065_SB_Structure Mounted Support-2.dgn

SIGNATURE/ BLOCK:
OFFICE OF ENGINEERING
APPROVED BY:

PROJECT TITLE:
REPLACEMENT OF OVERHEAD SIGN SUPPORTS ON VARIOUS ROUTES STATEWIDE

TOWN: NEW BRITAIN

DRAWING TITLE:
STRUCTURE MOUNTED SIGN SUPPORT - 2

PROJECT NO. 170-3065
DRAWING NO. S-3
SHEET NO. 04.03

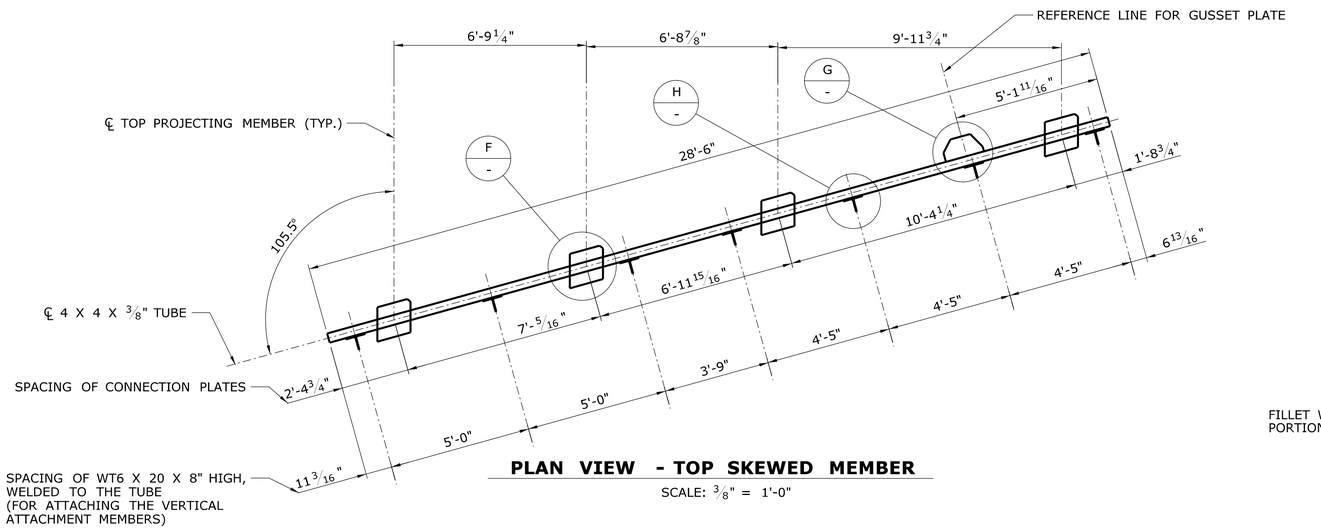

PLAN VIEW - TOP SKEWED MEMBER

SCALE: 3/8" = 1'-0"

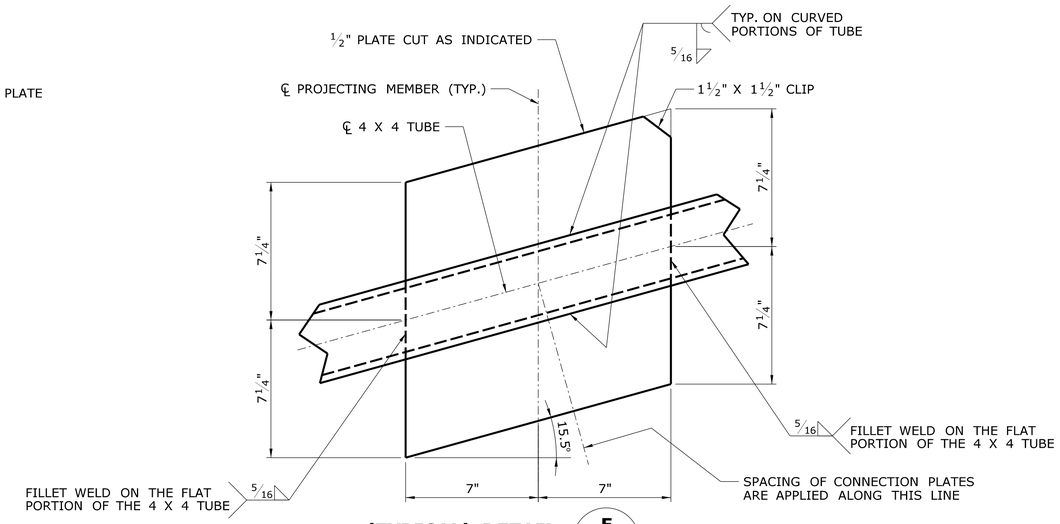

(TYPICAL) DETAIL CONNECTION PLATE F -

SCALE: 3" = 1'-0"

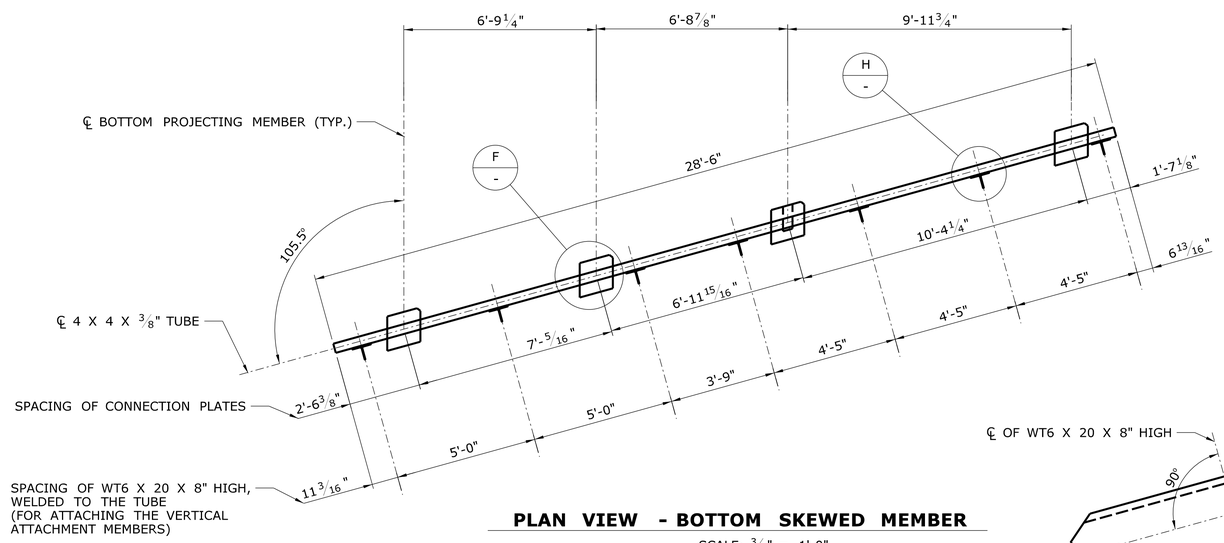

PLAN VIEW - BOTTOM SKEWED MEMBER

SCALE: 3/8" = 1'-0"

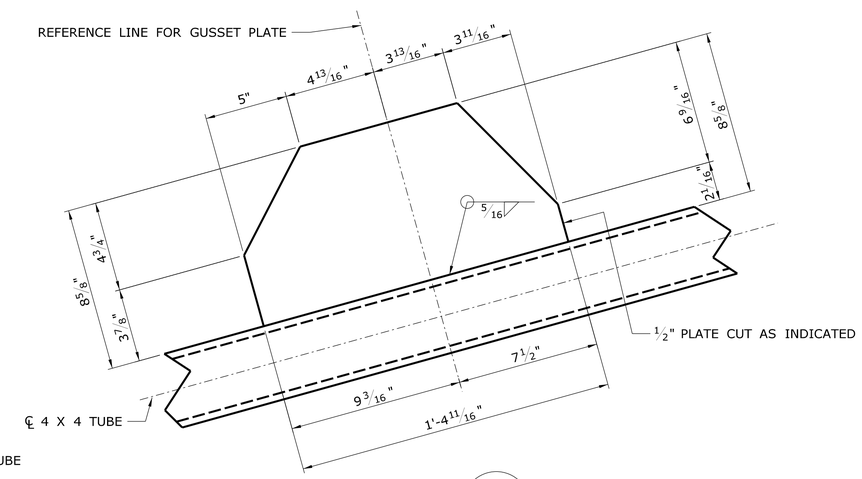

DETAIL G -

SCALE: 3" = 1'-0"

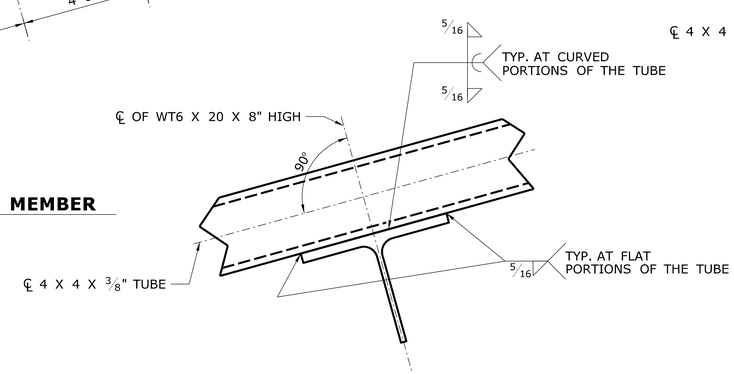

(TYPICAL) DETAIL H -

SCALE: 3" = 1'-0"

REV.	DATE	REVISION DESCRIPTION	SHEET NO.

THE INFORMATION, INCLUDING ESTIMATED QUANTITIES OF WORK, SHOWN ON THESE SHEETS IS BASED ON LIMITED INVESTIGATIONS BY THE STATE AND IS IN NO WAY WARRANTED TO INDICATE THE CONDITIONS OF ACTUAL QUANTITIES OF WORK WHICH WILL BE REQUIRED.

Plotted Date: 12/17/2012

DESIGNER/DRAFTER: JK

CHECKED BY: RDD

SCALE AS NOTED

STATE OF CONNECTICUT
DEPARTMENT OF TRANSPORTATION

Filename: ...\01703065_SB_Structure Mounted Support-3.dgn

SIGNATURE/ BLOCK:

OFFICE OF ENGINEERING

APPROVED BY:

PROJECT TITLE:

REPLACEMENT OF OVERHEAD SIGN SUPPORTS ON VARIOUS ROUTES STATEWIDE

TOWN: **NEW BRITAIN**

DRAWING TITLE: **STRUCTURE MOUNTED SIGN SUPPORT - 3**

PROJECT NO. **170-3065**

DRAWING NO. **S-4**

SHEET NO. **04.04**

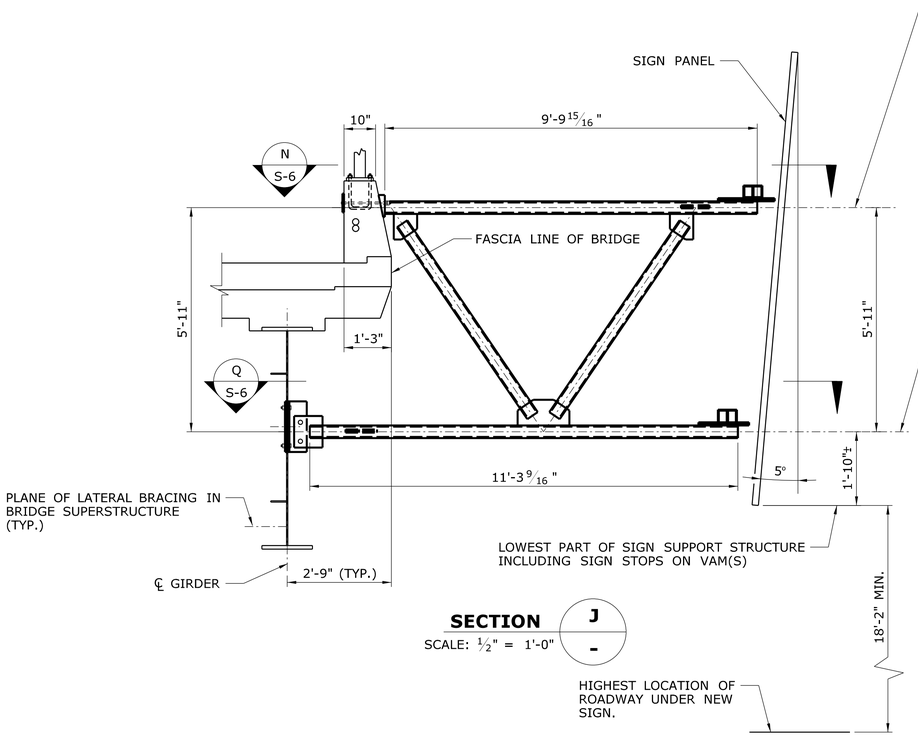

SECTION J / -
SCALE: 1/2" = 1'-0"

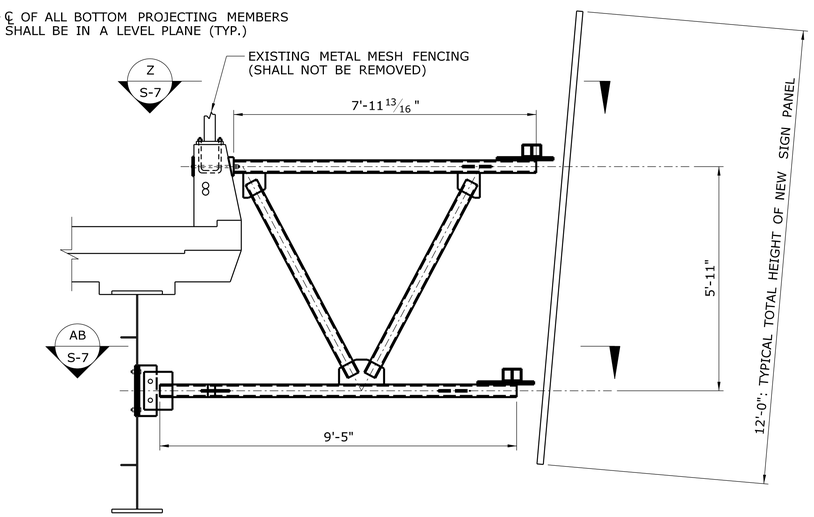

SECTION K / -
SCALE: 1/2" = 1'-0"

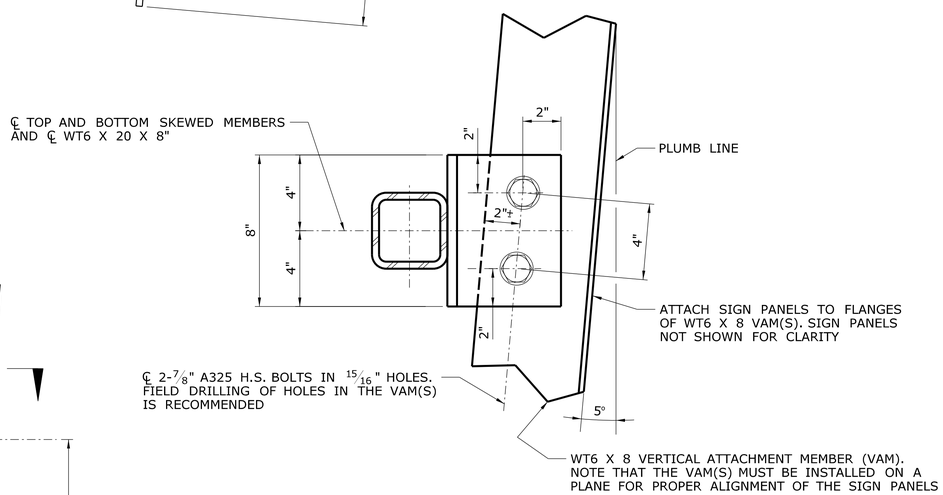

TYPICAL ATTACHMENT OF WT6 X 8 VAM TO WT6 X 20
SCALE: 3" = 1'-0"

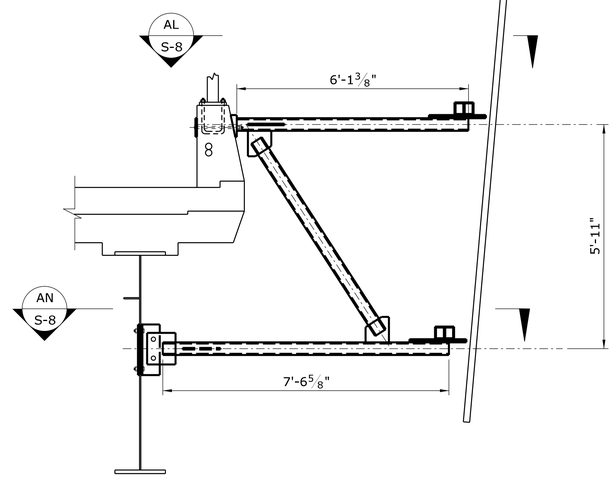

SECTION L / -
SCALE: 1/2" = 1'-0"

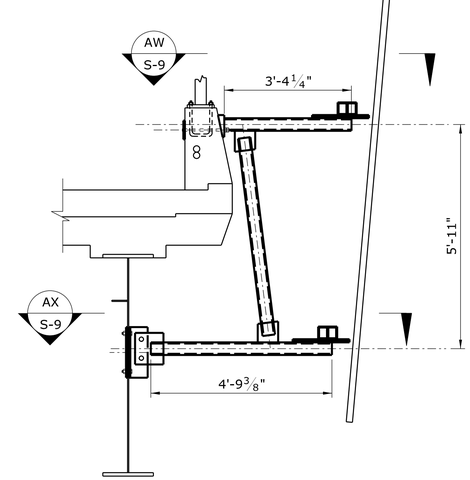

SECTION M / -
SCALE: 1/2" = 1'-0"

REV.	DATE	REVISION DESCRIPTION	SHEET NO.

THE INFORMATION, INCLUDING ESTIMATED QUANTITIES OF WORK, SHOWN ON THESE SHEETS IS BASED ON LIMITED INVESTIGATIONS BY THE STATE AND IS IN NO WAY WARRANTED TO INDICATE THE CONDITIONS OF ACTUAL QUANTITIES OF WORK WHICH WILL BE REQUIRED.

Plotted Date: 12/17/2012

DESIGNER/DRAFTER: JK
CHECKED BY: RDD
SCALE AS NOTED

STATE OF CONNECTICUT
DEPARTMENT OF TRANSPORTATION

Filename: ...\01703065_SB_Structure Mounted Support-4.dgn

SIGNATURE/ BLOCK:
OFFICE OF ENGINEERING
APPROVED BY:

PROJECT TITLE:
REPLACEMENT OF OVERHEAD SIGN SUPPORTS ON VARIOUS ROUTES STATEWIDE

TOWN: **NEW BRITAIN**

DRAWING TITLE:
STRUCTURE MOUNTED SIGN SUPPORT - 4

PROJECT NO. 170-3065
DRAWING NO. S-5
SHEET NO. 04.05

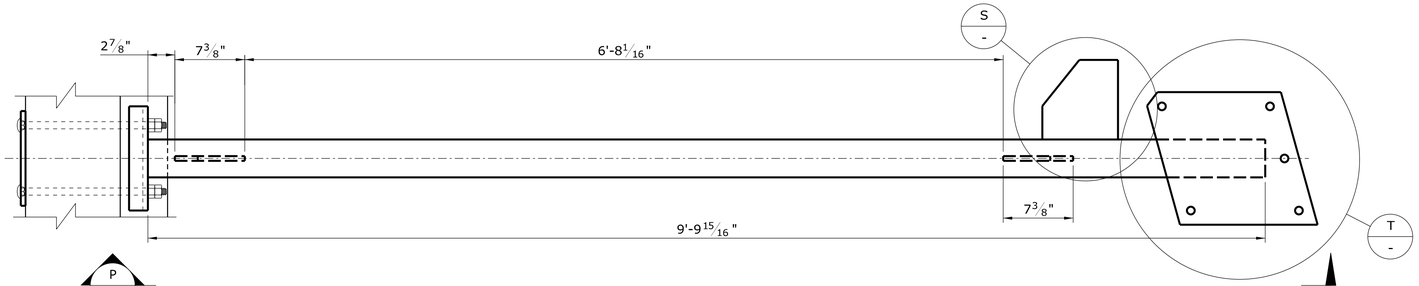

SECTION N
SCALE: 1 1/2" = 1'-0"

NOTE: SHEETS S-6 THRU S-9 SHOW THE PROJECTING MEMBERS PRIOR TO INSTALLATION OF THE TOP AND BOTTOM SKEWED MEMBERS, THE HORIZONTAL BRACING, AND THE VAM'S. THESE INSTALLATIONS SHALL BE MADE WITH HIGH STRENGTH BOLTS (7/8" DIAMETER)

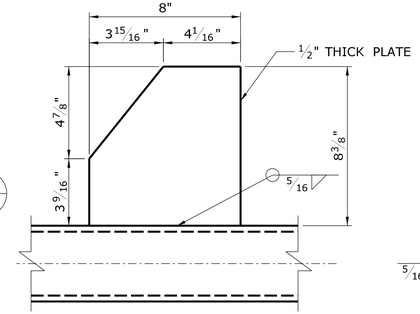

DETAIL S
SCALE: 3" = 1'-0"

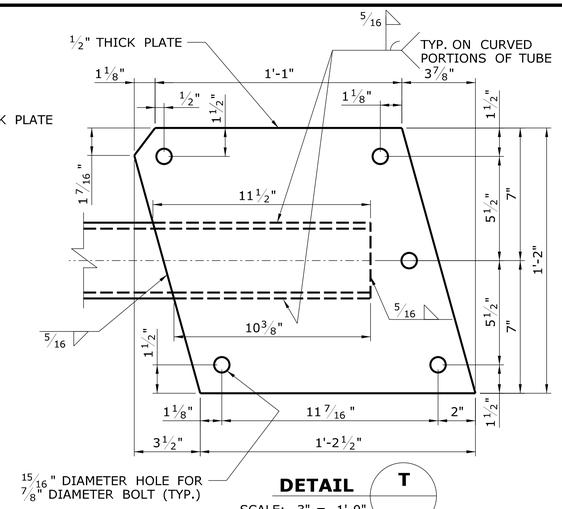

DETAIL T
SCALE: 3" = 1'-0"

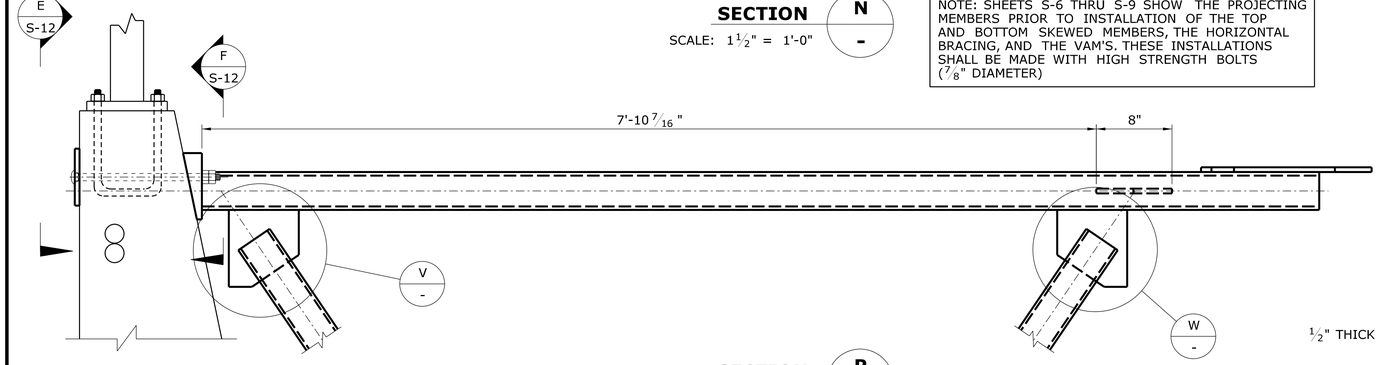

SECTION P
SCALE: 1 1/2" = 1'-0"

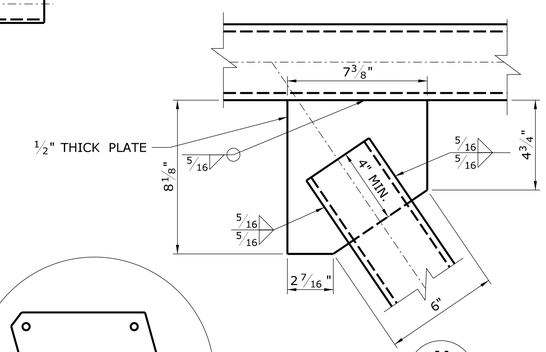

DETAIL V
SCALE: 3" = 1'-0"

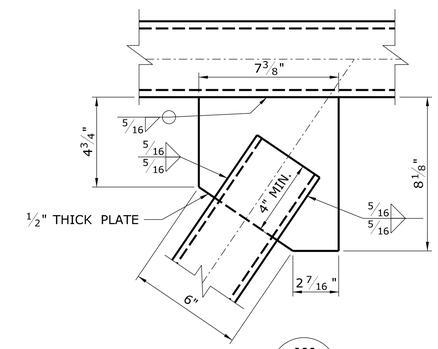

DETAIL W
SCALE: 3" = 1'-0"

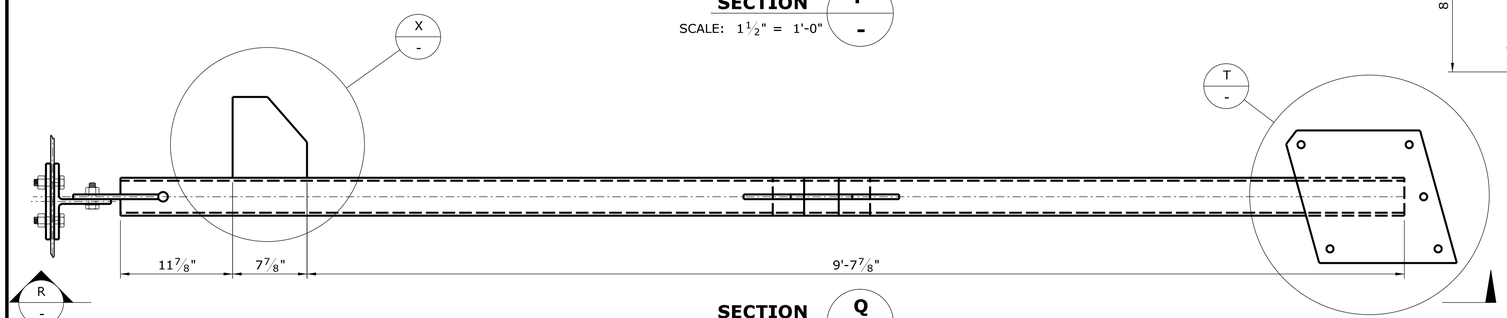

SECTION Q
SCALE: 1 1/2" = 1'-0"

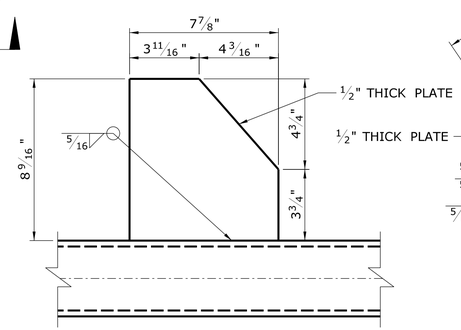

DETAIL X
SCALE: 3" = 1'-0"

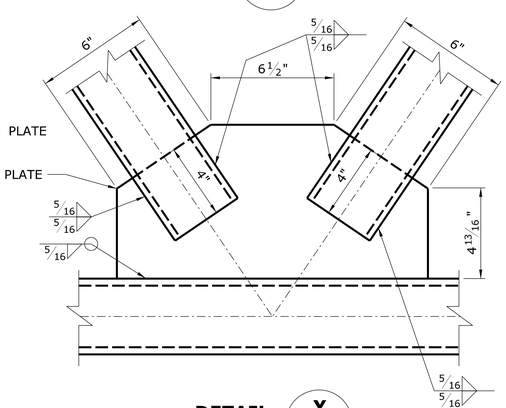

DETAIL Y
SCALE: 3" = 1'-0"

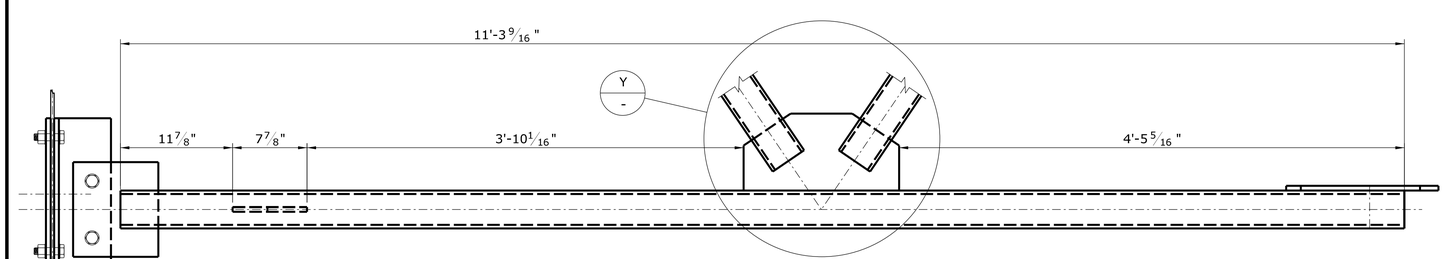

SECTION R
SCALE: 1 1/2" = 1'-0"

REV.	DATE	REVISION DESCRIPTION	SHEET NO.

THE INFORMATION, INCLUDING ESTIMATED QUANTITIES OF WORK, SHOWN ON THESE SHEETS IS BASED ON LIMITED INVESTIGATIONS BY THE STATE AND IS IN NO WAY WARRANTED TO INDICATE THE CONDITIONS OF ACTUAL QUANTITIES OF WORK WHICH WILL BE REQUIRED.

Plotted Date: 12/17/2012

DESIGNER/DRAFTER: JK
CHECKED BY: RDD
SCALE AS NOTED

STATE OF CONNECTICUT
DEPARTMENT OF TRANSPORTATION

Filename: ...\01703065_SB_Structure Mounted Support-5.dgn

SIGNATURE/BLOCK:
OFFICE OF ENGINEERING
APPROVED BY:

PROJECT TITLE:
REPLACEMENT OF OVERHEAD SIGN SUPPORTS ON VARIOUS ROUTES STATEWIDE

TOWN:
NEW BRITAIN

DRAWING TITLE:
STRUCTURE MOUNTED SIGN SUPPORT - 5

PROJECT NO. 170-3065
DRAWING NO. S-6
SHEET NO. 04.06

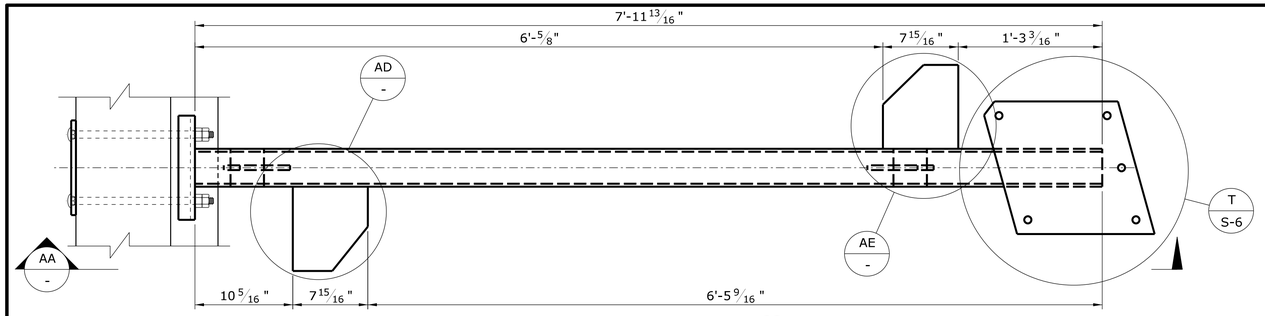

SECTION Z
SCALE: 1½" = 1'-0"

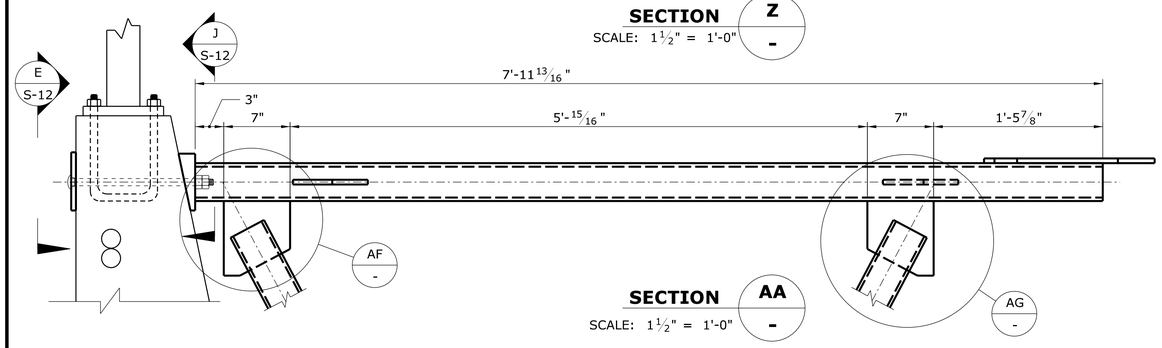

SECTION AA
SCALE: 1½" = 1'-0"

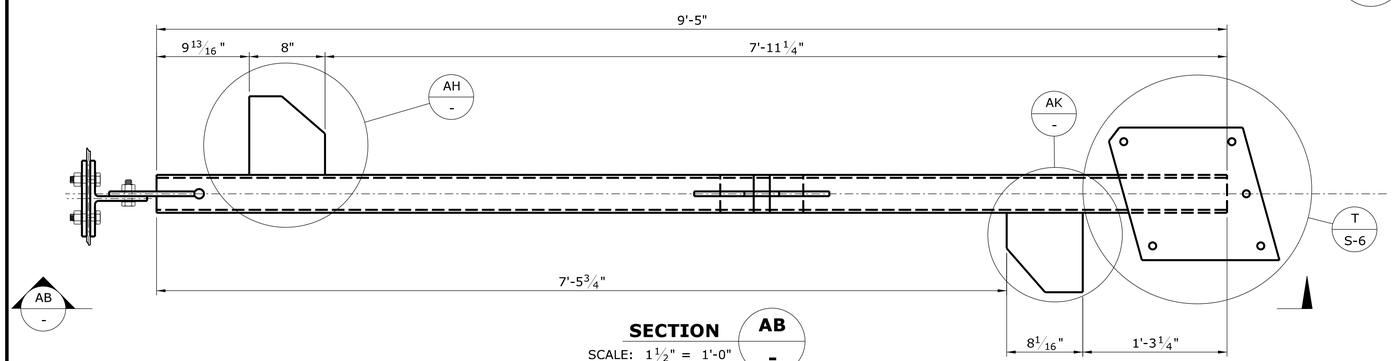

SECTION AB
SCALE: 1½" = 1'-0"

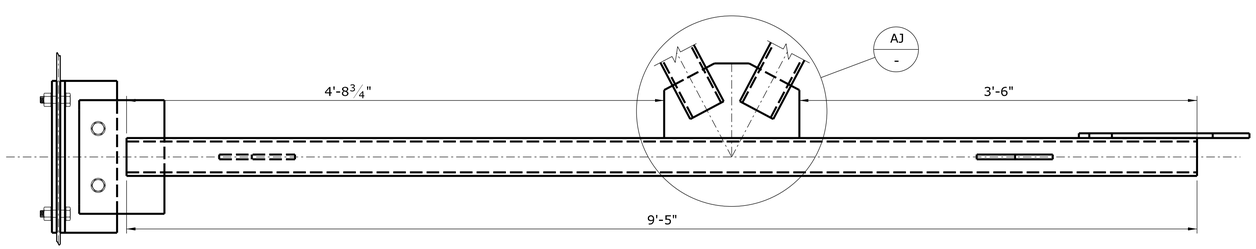

SECTION AC
SCALE: 1½" = 1'-0"

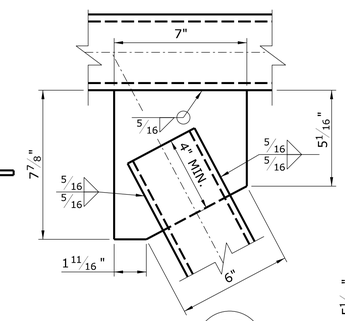

DETAIL AF
SCALE: 3" = 1'-0"

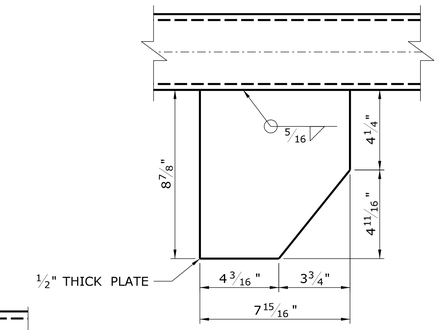

DETAIL AD
SCALE: 3" = 1'-0"

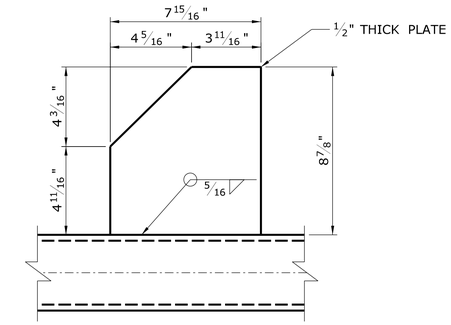

DETAIL AE
SCALE: 3" = 1'-0"

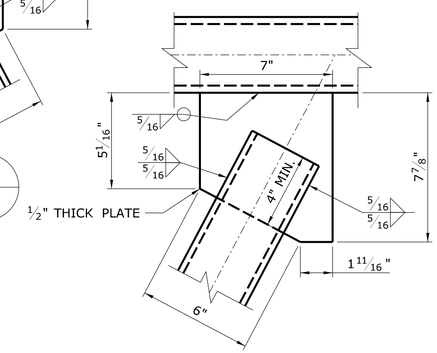

DETAIL AG
SCALE: 3" = 1'-0"

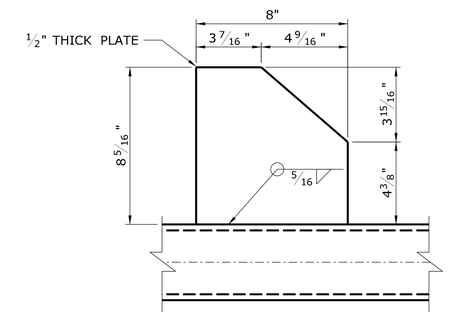

DETAIL AH
SCALE: 3" = 1'-0"

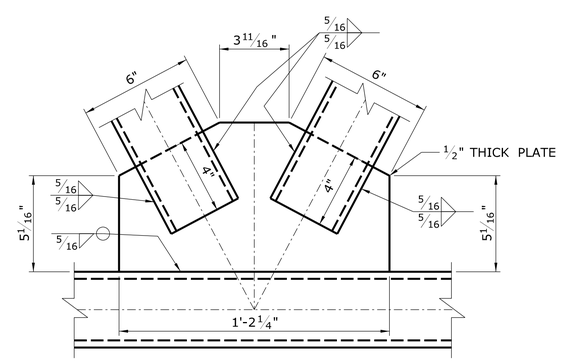

DETAIL AJ
SCALE: 3" = 1'-0"

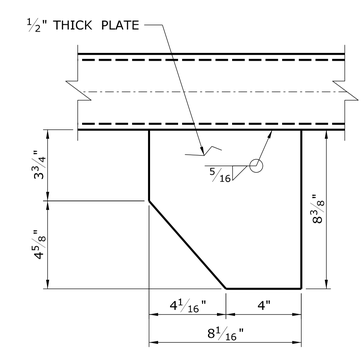

DETAIL AK
SCALE: 3" = 1'-0"

REV.	DATE	REVISION DESCRIPTION	SHEET NO.

THE INFORMATION, INCLUDING ESTIMATED QUANTITIES OF WORK, SHOWN ON THESE SHEETS IS BASED ON LIMITED INVESTIGATIONS BY THE STATE AND IS IN NO WAY WARRANTED TO INDICATE THE CONDITIONS OF ACTUAL QUANTITIES OF WORK WHICH WILL BE REQUIRED.

Plotted Date: 12/17/2012

DESIGNER/DRAFTER: JK
CHECKED BY: RDD
SCALE AS NOTED

STATE OF CONNECTICUT
DEPARTMENT OF TRANSPORTATION

Filename: ...\01703065_SB_Structure Mounted Support-6.dgn

SIGNATURE/BLOCK:
OFFICE OF ENGINEERING
APPROVED BY:

PROJECT TITLE:
REPLACEMENT OF OVERHEAD SIGN SUPPORTS ON VARIOUS ROUTES STATEWIDE

TOWN:
NEW BRITAIN

DRAWING TITLE:
STRUCTURE MOUNTED SIGN SUPPORT - 6

PROJECT NO. 170-3065
DRAWING NO. S-7
SHEET NO. 04.07

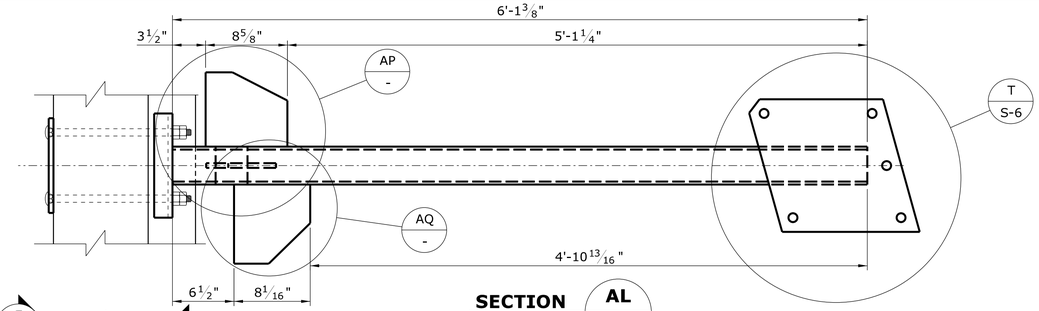

SECTION AL
SCALE: 1 1/2" = 1'-0"

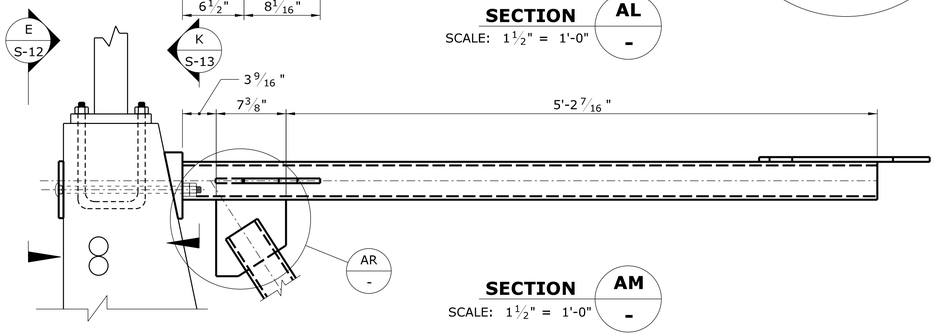

SECTION AM
SCALE: 1 1/2" = 1'-0"

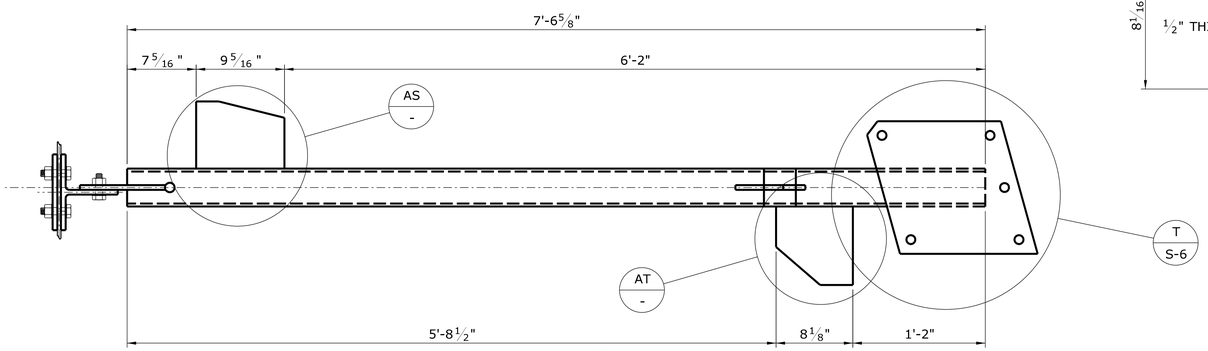

SECTION AN
SCALE: 1 1/2" = 1'-0"

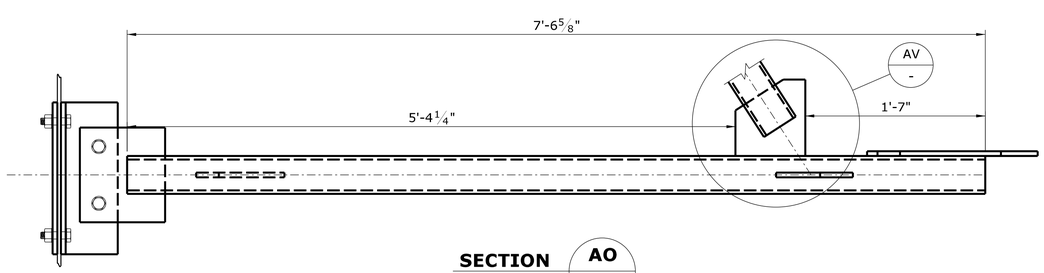

SECTION AO
SCALE: 1 1/2" = 1'-0"

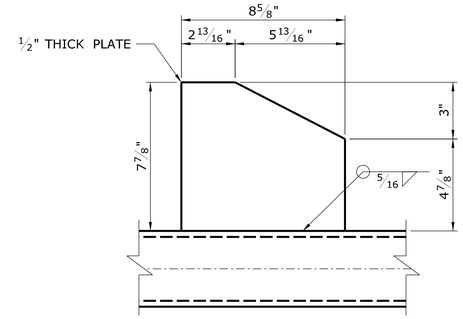

DETAIL AP
SCALE: 3" = 1'-0"

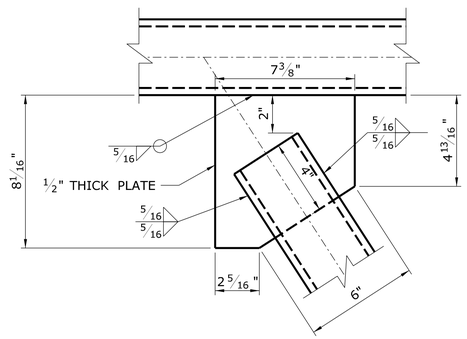

DETAIL AR
SCALE: 3" = 1'-0"

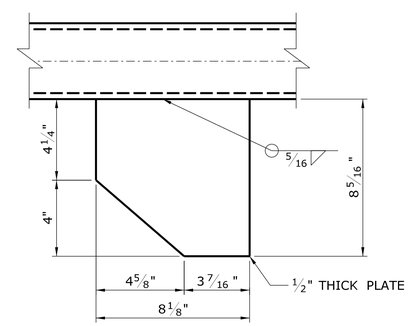

DETAIL AT
SCALE: 3" = 1'-0"

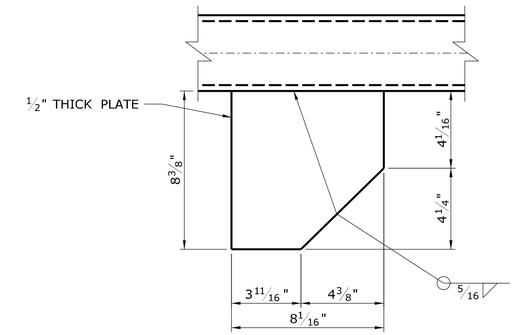

DETAIL AQ
SCALE: 3" = 1'-0"

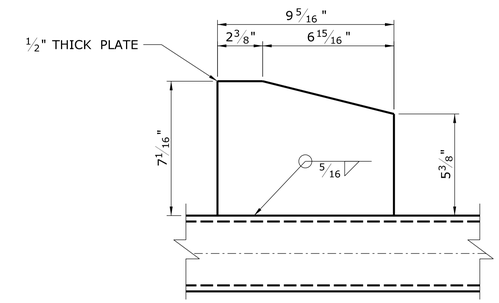

DETAIL AS
SCALE: 3" = 1'-0"

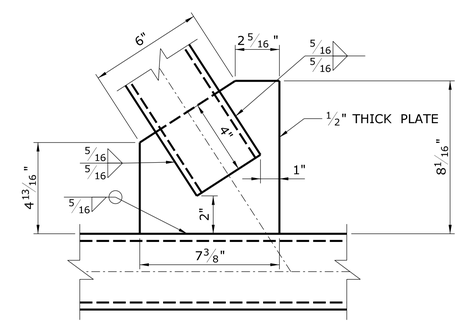

DETAIL AV
SCALE: 3" = 1'-0"

REV.	DATE	REVISION DESCRIPTION	SHEET NO.

THE INFORMATION, INCLUDING ESTIMATED QUANTITIES OF WORK, SHOWN ON THESE SHEETS IS BASED ON LIMITED INVESTIGATIONS BY THE STATE AND IS IN NO WAY WARRANTED TO INDICATE THE CONDITIONS OF ACTUAL QUANTITIES OF WORK WHICH WILL BE REQUIRED.

Plotted Date: 12/17/2012

DESIGNER/DRAFTER: JK
CHECKED BY: RDD
SCALE AS NOTED

STATE OF CONNECTICUT
DEPARTMENT OF TRANSPORTATION

Filename: ...\01703065_SB_Structure Mounted Support-7.dgn

SIGNATURE/BLOCK:
OFFICE OF ENGINEERING
APPROVED BY:

PROJECT TITLE:
REPLACEMENT OF OVERHEAD SIGN SUPPORTS ON VARIOUS ROUTES STATEWIDE

TOWN: NEW BRITAIN

DRAWING TITLE:
STRUCTURE MOUNTED SIGN SUPPORT - 7

PROJECT NO. 170-3065
DRAWING NO. S-8
SHEET NO. 04.08

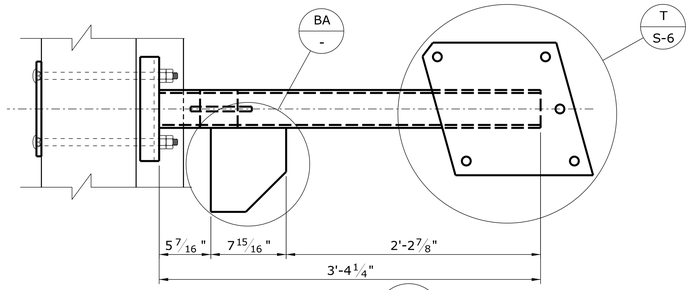

SECTION AW
SCALE: 1 1/2" = 1'-0"

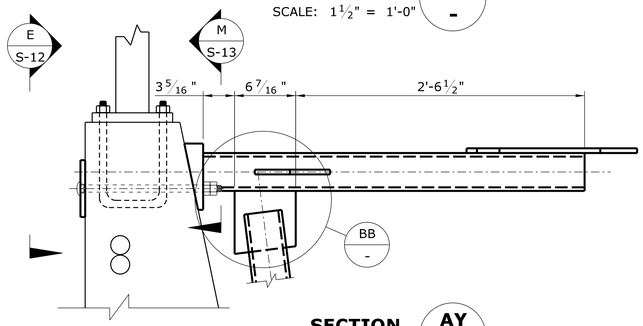

SECTION AY
SCALE: 1 1/2" = 1'-0"

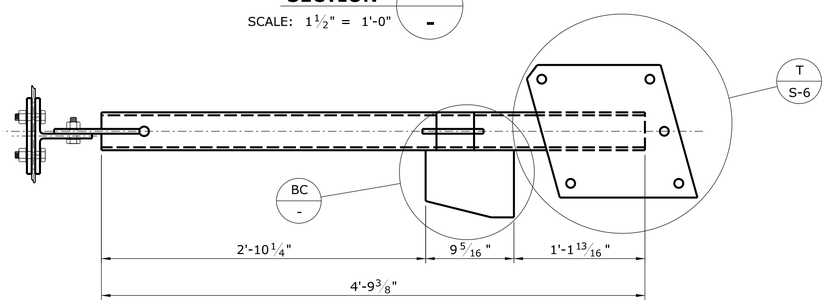

SECTION AX
SCALE: 1 1/2" = 1'-0"

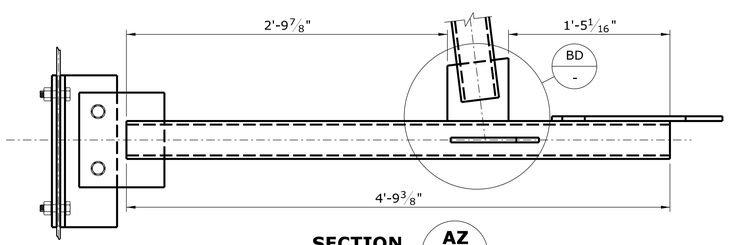

SECTION AZ
SCALE: 1 1/2" = 1'-0"

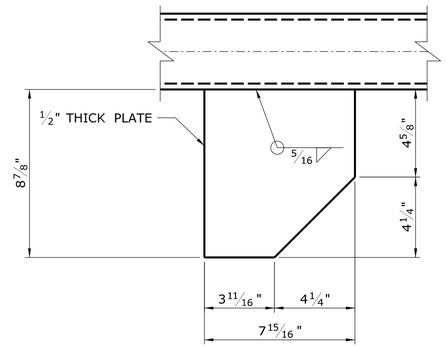

DETAIL BA
SCALE: 3" = 1'-0"

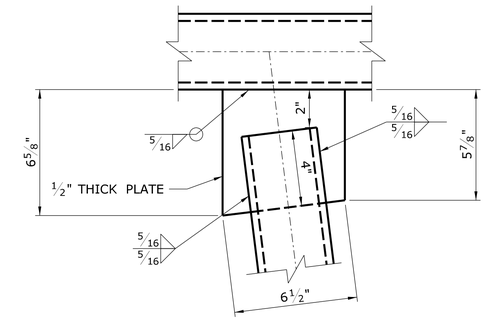

DETAIL BB
SCALE: 3" = 1'-0"

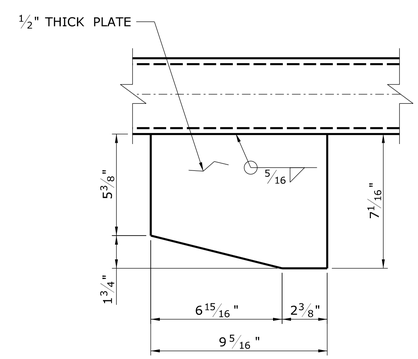

DETAIL BC
SCALE: 3" = 1'-0"

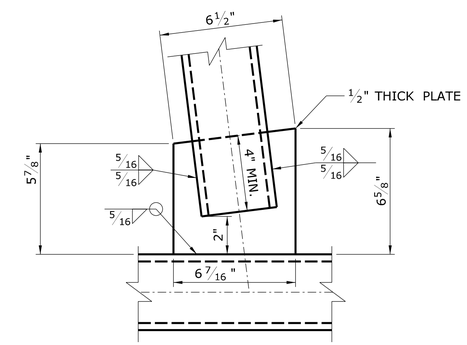

DETAIL BD
SCALE: 3" = 1'-0"

REV.	DATE	REVISION DESCRIPTION	SHEET NO.

THE INFORMATION, INCLUDING ESTIMATED QUANTITIES OF WORK, SHOWN ON THESE SHEETS IS BASED ON LIMITED INVESTIGATIONS BY THE STATE AND IS IN NO WAY WARRANTED TO INDICATE THE CONDITIONS OF ACTUAL QUANTITIES OF WORK WHICH WILL BE REQUIRED.

Plotted Date: 12/17/2012

DESIGNER/DRAFTER: JK
CHECKED BY: RDD
SCALE AS NOTED

STATE OF CONNECTICUT
DEPARTMENT OF TRANSPORTATION

Filename: ...\01703065_SB_Structure Mounted Support-8.dgn

SIGNATURE/BLOCK:
OFFICE OF ENGINEERING
APPROVED BY:

PROJECT TITLE:
REPLACEMENT OF OVERHEAD SIGN SUPPORTS ON VARIOUS ROUTES STATEWIDE

TOWN: **NEW BRITAIN**

DRAWING TITLE: **STRUCTURE MOUNTED SIGN SUPPORT - 8**

PROJECT NO. **170-3065**
DRAWING NO. **S-9**
SHEET NO. **04.09**

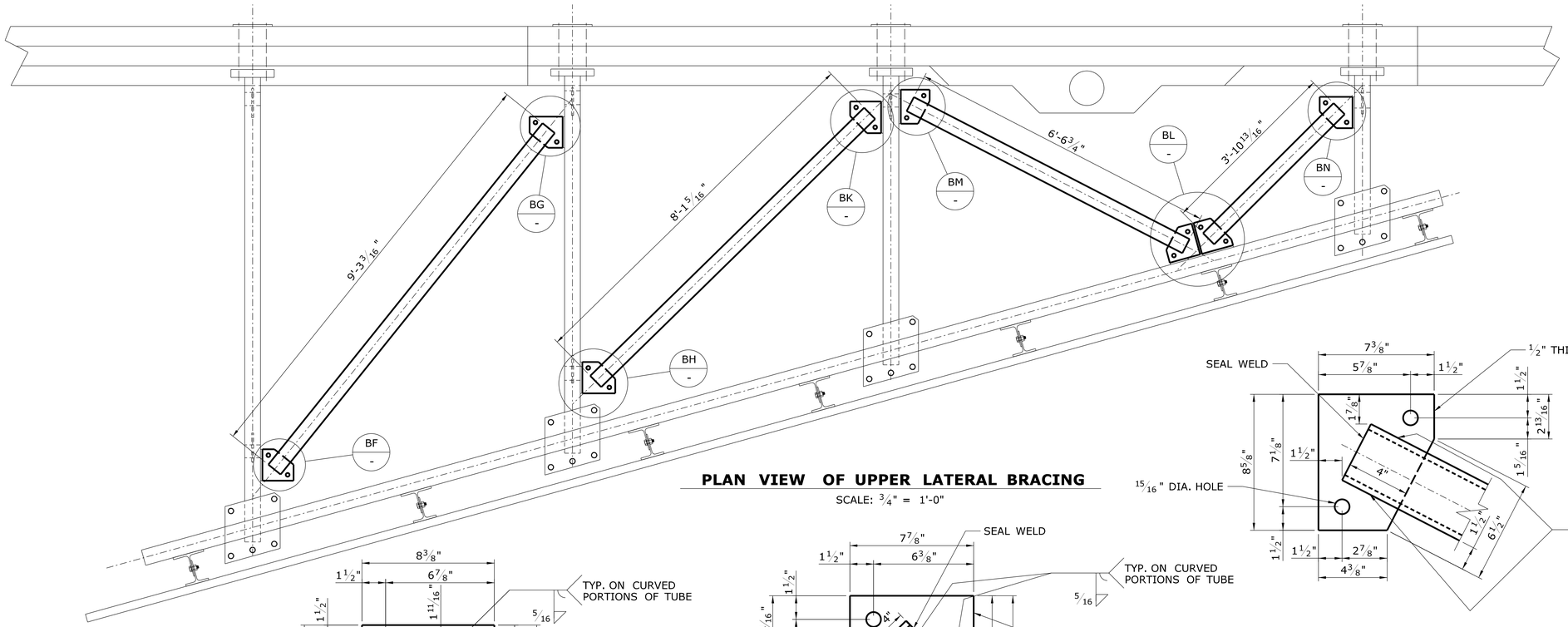

PLAN VIEW OF UPPER LATERAL BRACING

SCALE: 3/4" = 1'-0"

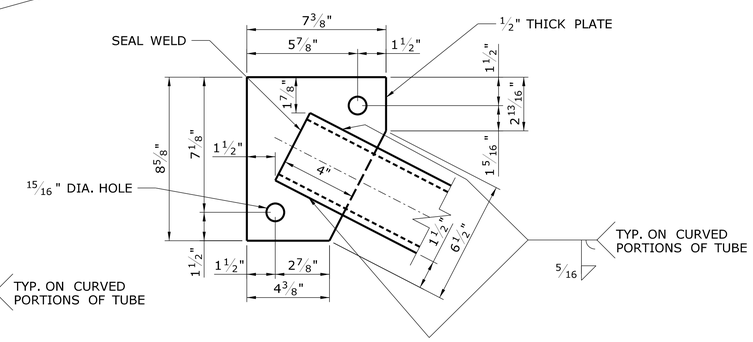

DETAIL BM
SCALE: 3" = 1'-0"

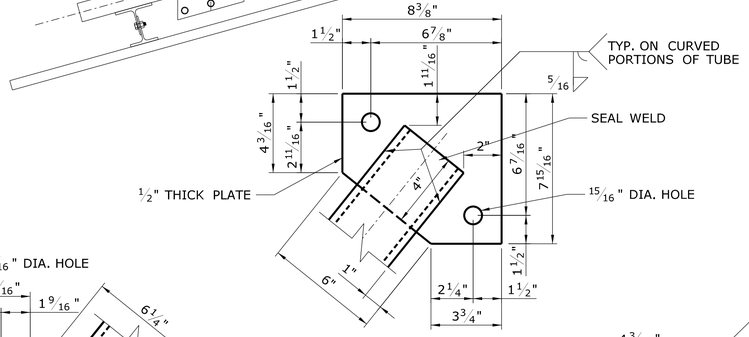

DETAIL BG
SCALE: 3" = 1'-0"

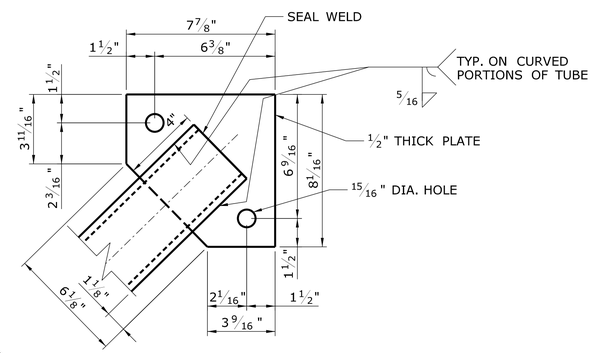

DETAIL BK
SCALE: 3" = 1'-0"

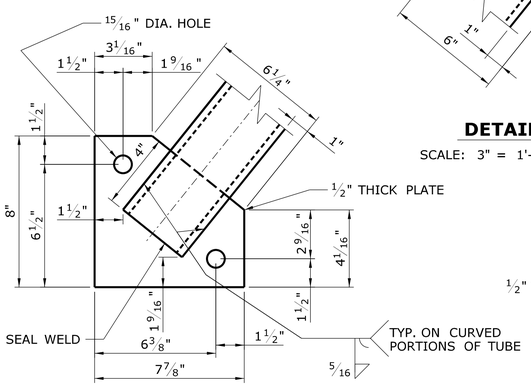

DETAIL BF
SCALE: 3" = 1'-0"

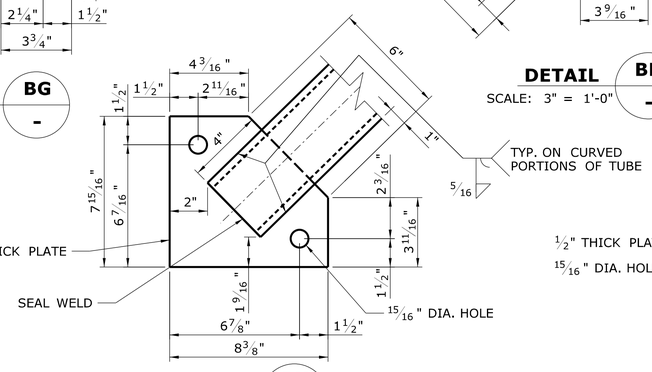

DETAIL BH
SCALE: 3" = 1'-0"

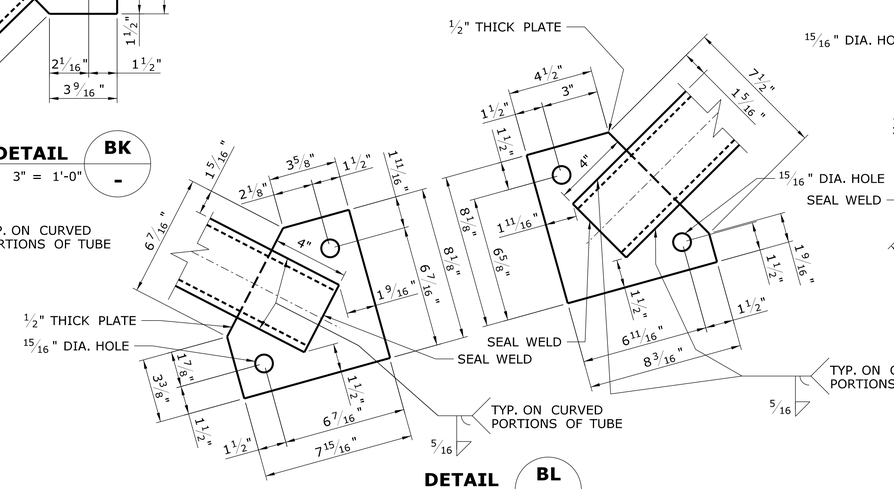

DETAIL BL
SCALE: 3" = 1'-0"

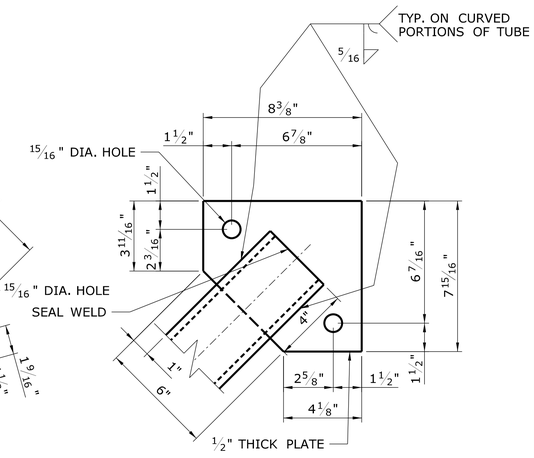

DETAIL BN
SCALE: 3" = 1'-0"

REV.	DATE	REVISION DESCRIPTION	SHEET NO.

THE INFORMATION, INCLUDING ESTIMATED QUANTITIES OF WORK, SHOWN ON THESE SHEETS IS BASED ON LIMITED INVESTIGATIONS BY THE STATE AND IS IN NO WAY WARRANTED TO INDICATE THE CONDITIONS OF ACTUAL QUANTITIES OF WORK WHICH WILL BE REQUIRED.

Plotted Date: 12/17/2012

DESIGNER/DRAFTER: JK
CHECKED BY: RDD
SCALE AS NOTED

STATE OF CONNECTICUT
DEPARTMENT OF TRANSPORTATION

Filename: ...\01703065_SB_Structure Mounted Support-9.dgn

SIGNATURE/BLOCK:
OFFICE OF ENGINEERING
APPROVED BY:

PROJECT TITLE:
REPLACEMENT OF OVERHEAD SIGN SUPPORTS ON VARIOUS ROUTES STATEWIDE

TOWN: NEW BRITAIN

DRAWING TITLE:
STRUCTURE MOUNTED SIGN SUPPORT - 9

PROJECT NO. 170-3065
DRAWING NO. S-10
SHEET NO. 04.10

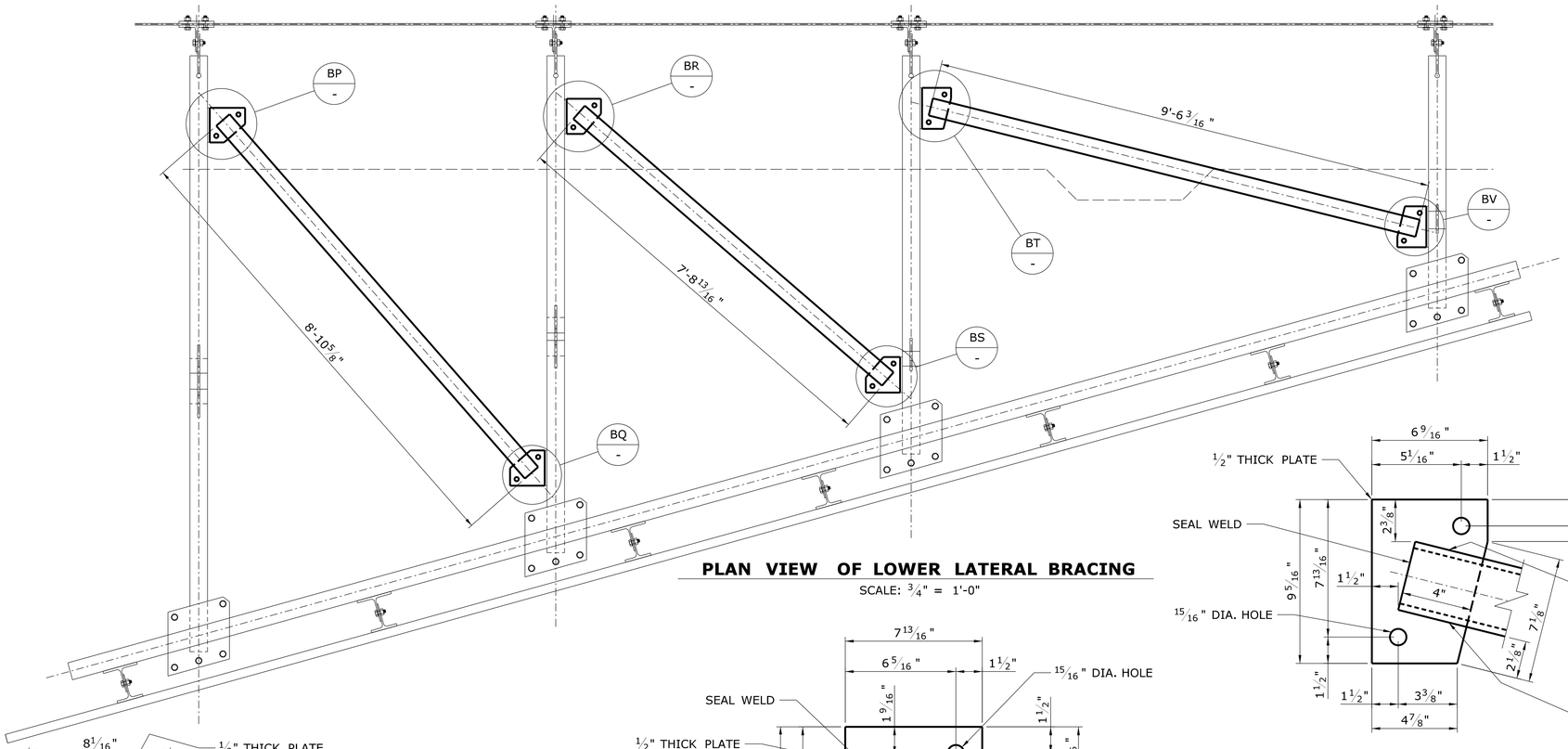

PLAN VIEW OF LOWER LATERAL BRACING

SCALE: 3/4" = 1'-0"

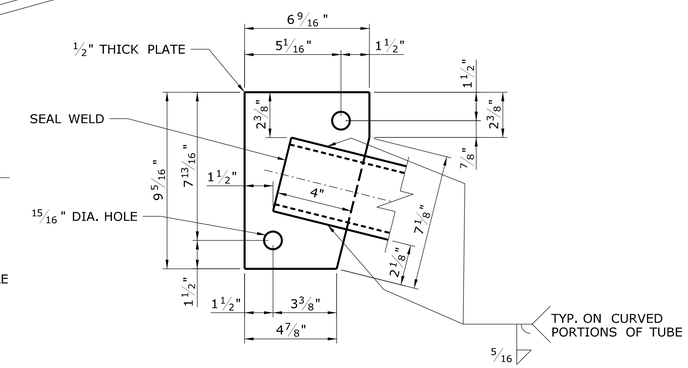

DETAIL BT - SCALE: 3" = 1'-0"

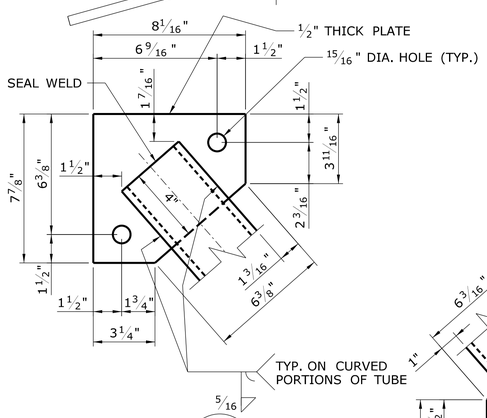

DETAIL BP - SCALE: 3" = 1'-0"

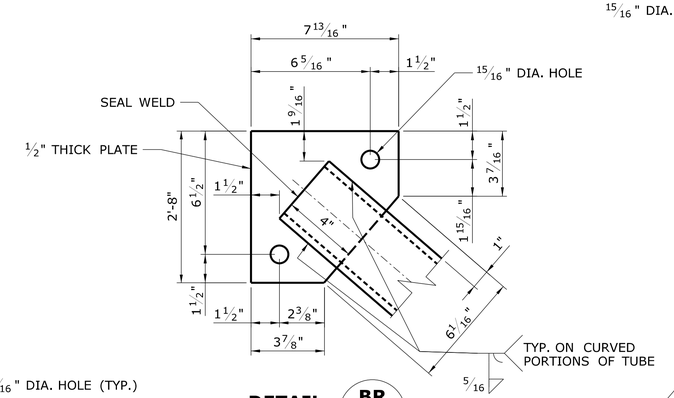

DETAIL BR - SCALE: 3" = 1'-0"

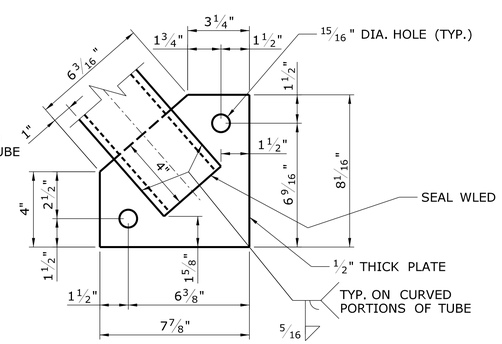

DETAIL BQ - SCALE: 3" = 1'-0"

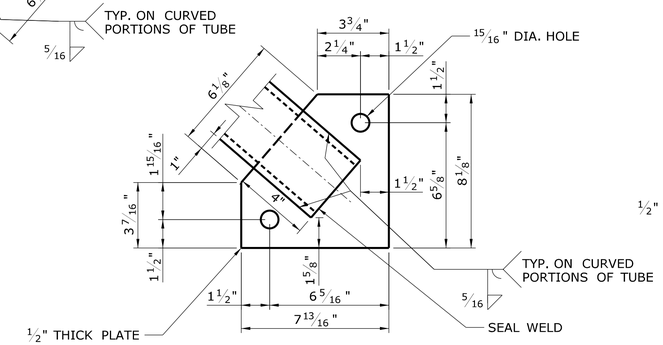

DETAIL BS - SCALE: 3" = 1'-0"

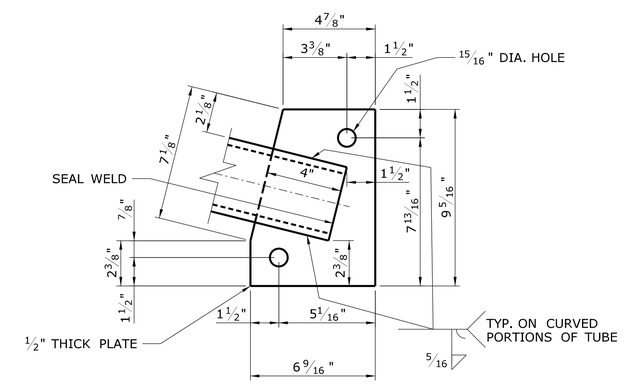

DETAIL BV - SCALE: 3" = 1'-0"

REV.	DATE	REVISION DESCRIPTION	SHEET NO.

THE INFORMATION, INCLUDING ESTIMATED QUANTITIES OF WORK, SHOWN ON THESE SHEETS IS BASED ON LIMITED INVESTIGATIONS BY THE STATE AND IS IN NO WAY WARRANTED TO INDICATE THE CONDITIONS OF ACTUAL QUANTITIES OF WORK WHICH WILL BE REQUIRED.

Plotted Date: 12/17/2012

DESIGNER/DRAFTER: JK

CHECKED BY: RDD

SCALE AS NOTED

STATE OF CONNECTICUT
DEPARTMENT OF TRANSPORTATION

Filename: ...\01703065_SB_Structure Mounted Support-10.dgn

SIGNATURE/BLOCK:
OFFICE OF ENGINEERING

APPROVED BY:

PROJECT TITLE:
REPLACEMENT OF OVERHEAD SIGN SUPPORTS ON VARIOUS ROUTES STATEWIDE

TOWN: NEW BRITAIN

DRAWING TITLE:
STRUCTURE MOUNTED SIGN SUPPORT - 10

PROJECT NO. 170-3065

DRAWING NO. S-11

SHEET NO. 04.11

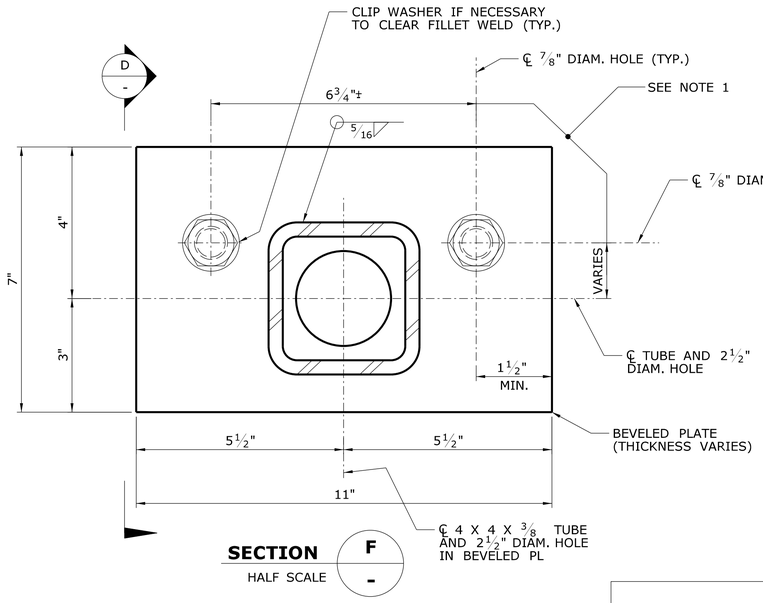

SECTION F / - HALF SCALE

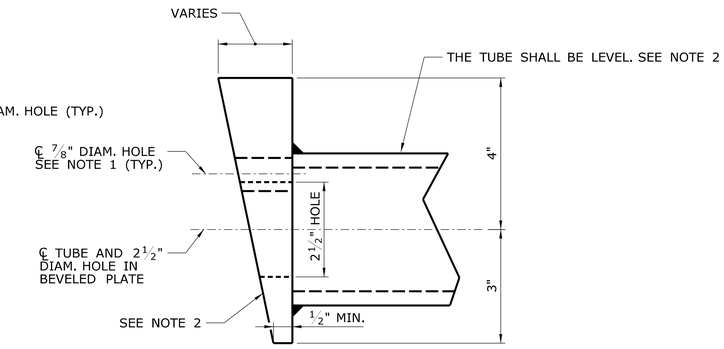

VIEW D / - HALF SCALE

NOTE: CARRIAGE BOLTS, DOUBLE NUTS, AND CONCRETE NOT SHOWN IN SIDE VIEWS FOR CLARITY

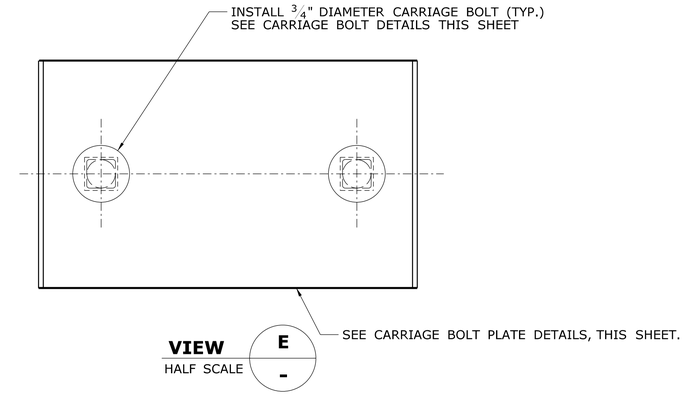

VIEW E / - HALF SCALE

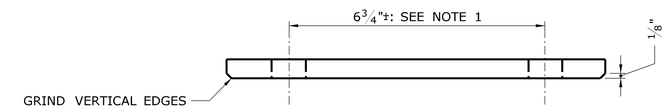

VIEW G / - HALF SCALE

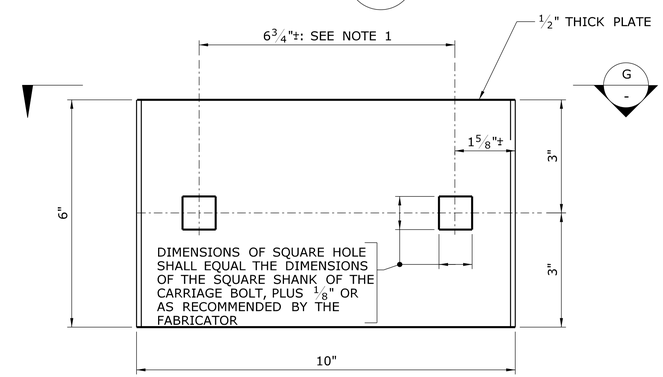

CARRIAGE BOLT PLATE DETAILS

HALF SCALE

NOTES

1. THE HOLES FOR THE CARRIAGE BOLTS, IN THE BEVELED PLATES AND THE CARRIAGE BOLT PLATES, SHALL MATCH UP WITH THE EXISTING HOLES IN THE CONCRETE PARAPET. CONTRACTOR SHALL TAKE FIELD MEASUREMENTS AS REQUIRED. NOTE THAT SOME OF THE EXISTING HOLES DO NOT APPEAR TO BE LEVEL AT ALL LOCATIONS.

2. THE BEVELED PLATE SHALL BE MACHINED IN TWO DIMENSIONS (VERTICAL AND HORIZONTAL) SUCH THAT AFTER INSTALLATION ONTO THE SLANTED PARAPET THE FOLLOWING CONDITIONS SHALL BE ACHIEVED:

   -THERE SHALL BE NO GAPS BETWEEN THE BEVELED PLATE AND THE CONCRETE,
   -THE TUBULAR MEMBERS SHALL BE LEVEL, AND
   -THE HORIZONTAL ANGLE BETWEEN THE PROJECTING TUBULAR MEMBERS AND THE FASCIA LINE OF THE BRIDGE SHALL BE AS CLOSE AS POSSIBLE TO A 90 DEGREE ANGLE TO FACILITATE INSTALLATION OF THE HORIZONTAL BRACING.

THE USE OF SHIMS, WASHERS, ETC. TO ACHIEVE ANY OR ALL OF THE ABOVE CONDITIONS IS NOT ACCEPTABLE AND WILL RESULT IN REJECTION OF THE STRUCTURE MOUNTED SIGN STRUCTURE. REASON FOR UNACCEPTABILITY OF GAPS AT FAYING SURFACES OF PLATES IS THAT GAPS TYPICALLY CAUSE A LOWERED CONDITION RATING FOR THE STRUCTURE BY INSPECTION PERSONNEL.

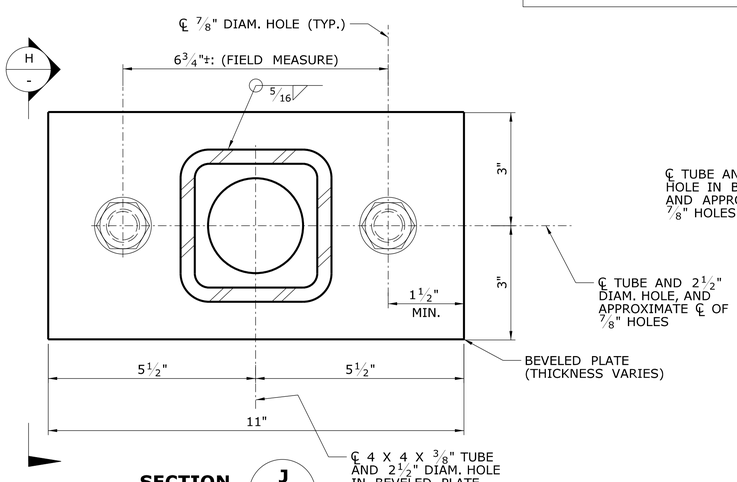

SECTION J / - HALF SCALE

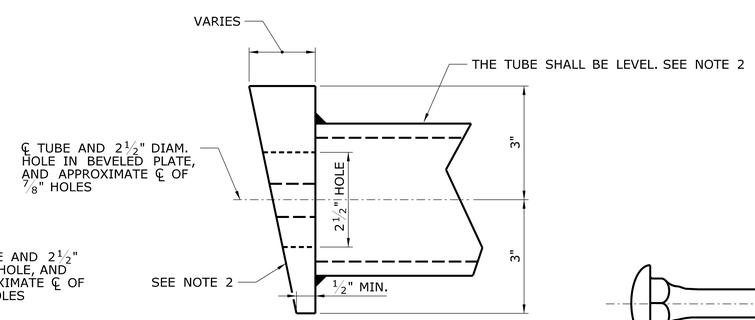

VIEW H / - HALF SCALE

THREADING AS REQUIRED TO ACHIEVE FULL BEARING ON THE BEVELED PLATES AND AS REQUIRED TO INSTALL TWO NUTS

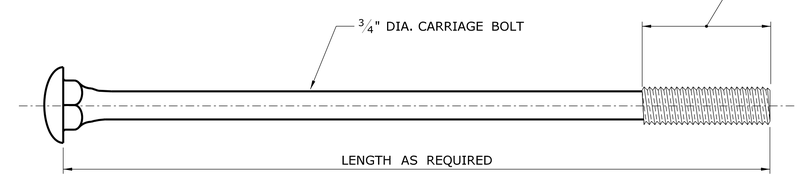

CARRIAGE BOLT DETAILS

NTS

REV.	DATE	REVISION DESCRIPTION	SHEET NO.

THE INFORMATION, INCLUDING ESTIMATED QUANTITIES OF WORK, SHOWN ON THESE SHEETS IS BASED ON LIMITED INVESTIGATIONS BY THE STATE AND IS IN NO WAY WARRANTED TO INDICATE THE CONDITIONS OF ACTUAL QUANTITIES OF WORK WHICH WILL BE REQUIRED.

Plotted Date: 12/17/2012

DESIGNER/DRAFTER: EWP
CHECKED BY: RDD
SCALE AS NOTED

STATE OF CONNECTICUT
DEPARTMENT OF TRANSPORTATION

Filename: ...\01703065_SB_Structure Mounted Support-11.dgn

SIGNATURE/BLOCK: OFFICE OF ENGINEERING
APPROVED BY:

PROJECT TITLE: REPLACEMENT OF OVERHEAD SIGN SUPPORTS ON VARIOUS ROUTES STATEWIDE

TOWN: NEW BRITAIN

DRAWING TITLE: STRUCTURE MOUNTED SIGN SUPPORT - 11

PROJECT NO. 170-3065
DRAWING NO. S-12
SHEET NO. 04.12

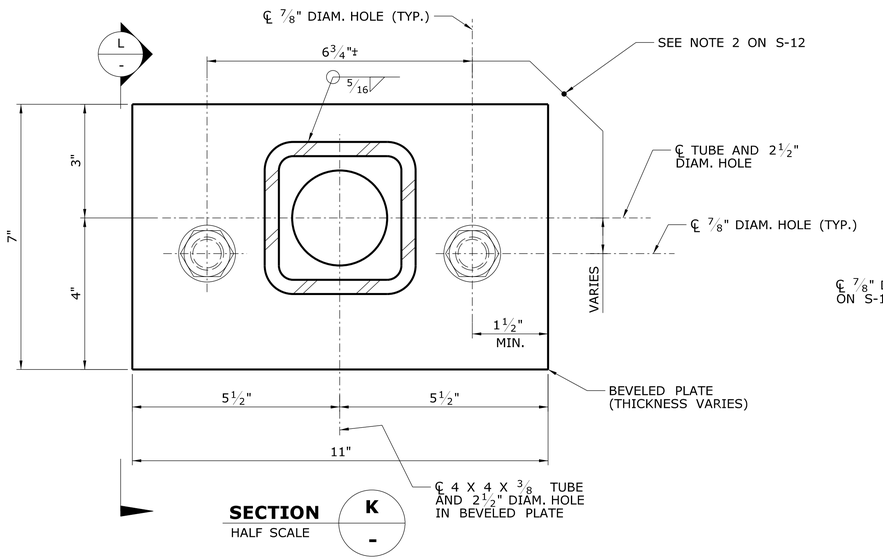

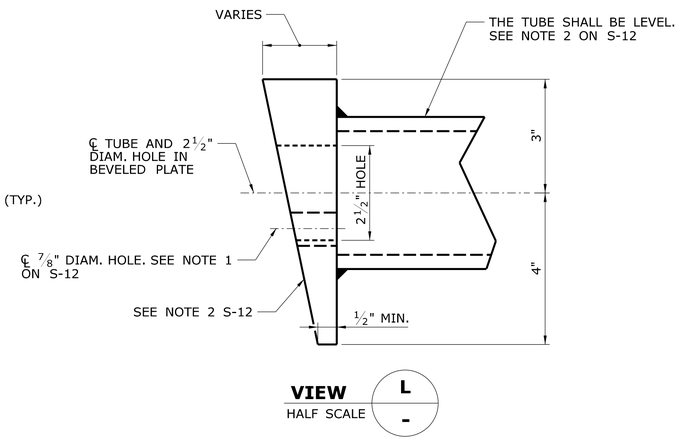

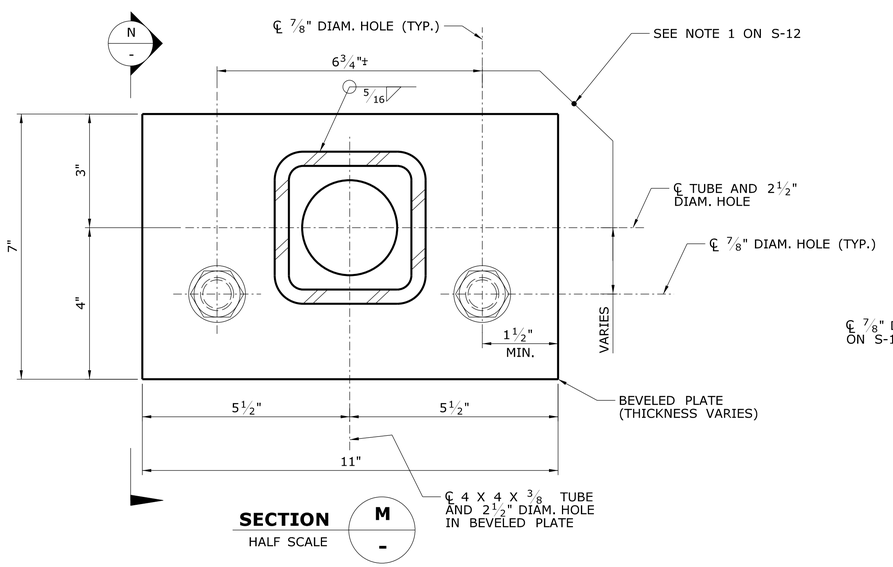

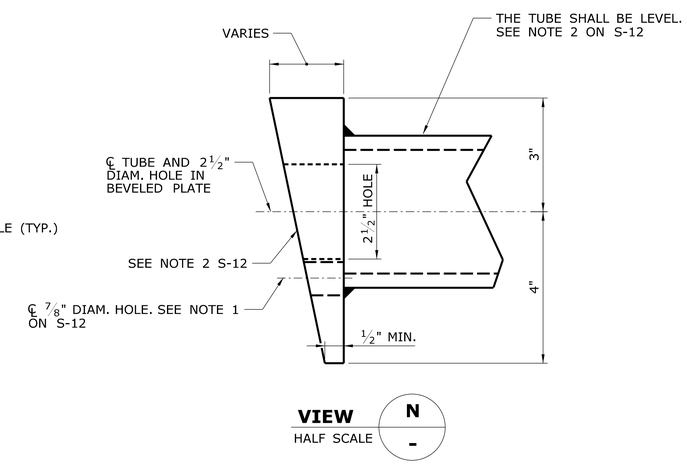

REV.	DATE	REVISION DESCRIPTION	SHEET NO.

THE INFORMATION, INCLUDING ESTIMATED QUANTITIES OF WORK, SHOWN ON THESE SHEETS IS BASED ON LIMITED INVESTIGATIONS BY THE STATE AND IS IN NO WAY WARRANTED TO INDICATE THE CONDITIONS OF ACTUAL QUANTITIES OF WORK WHICH WILL BE REQUIRED.

Plotted Date: 12/17/2012

DESIGNER/DRAFTER: EWP

CHECKED BY: RDD

SCALE AS NOTED

STATE OF CONNECTICUT
DEPARTMENT OF TRANSPORTATION

Filename: ...\01703065_SB_Structure Mounted Support-12.dgn

SIGNATURE/ BLOCK:
OFFICE OF ENGINEERING

APPROVED BY:

PROJECT TITLE:
REPLACEMENT OF OVERHEAD SIGN SUPPORTS ON VARIOUS ROUTES STATEWIDE

TOWN:
NEW BRITAIN

DRAWING TITLE:
STRUCTURE MOUNTED SIGN SUPPORT - 12

PROJECT NO. 170-3065

DRAWING NO. S-13

SHEET NO. 04.13

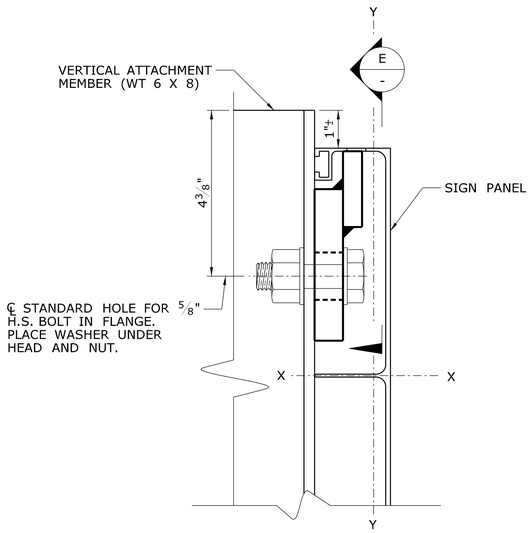

DETAIL D -

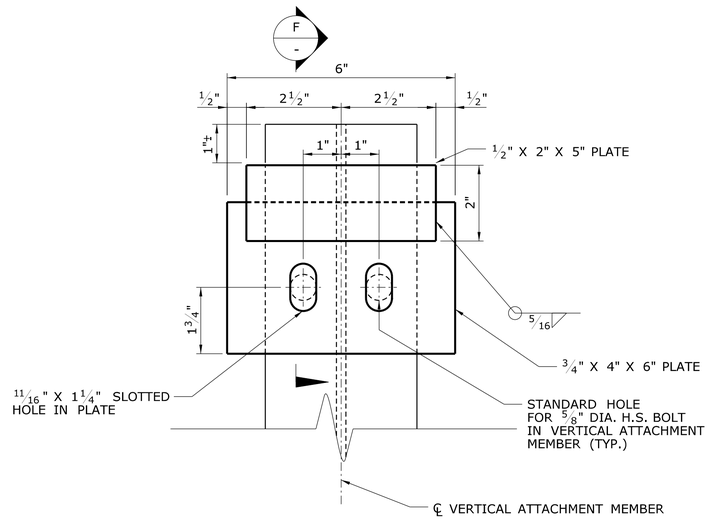

SECTION E -

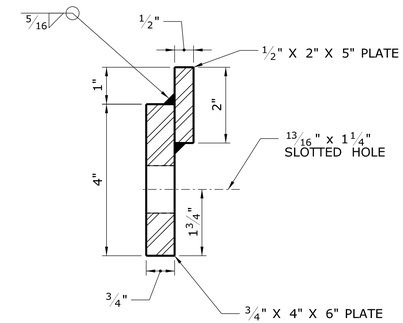

SECTION F -

TYPICAL SIGN PANEL HOOK DETAILS

SCALE: 6" = 1'-0"

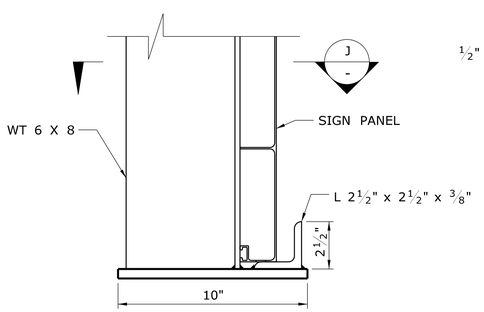

DETAIL H -

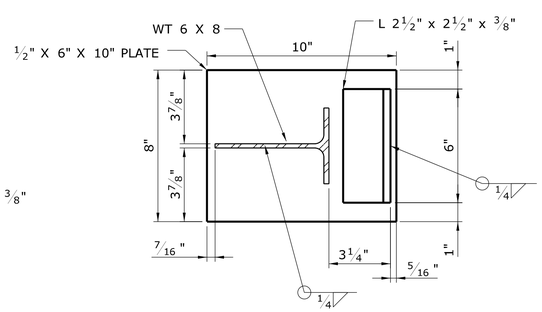

SECTION J -

TYPICAL SIGN STOP DETAILS

SCALE: 3" = 1'-0"

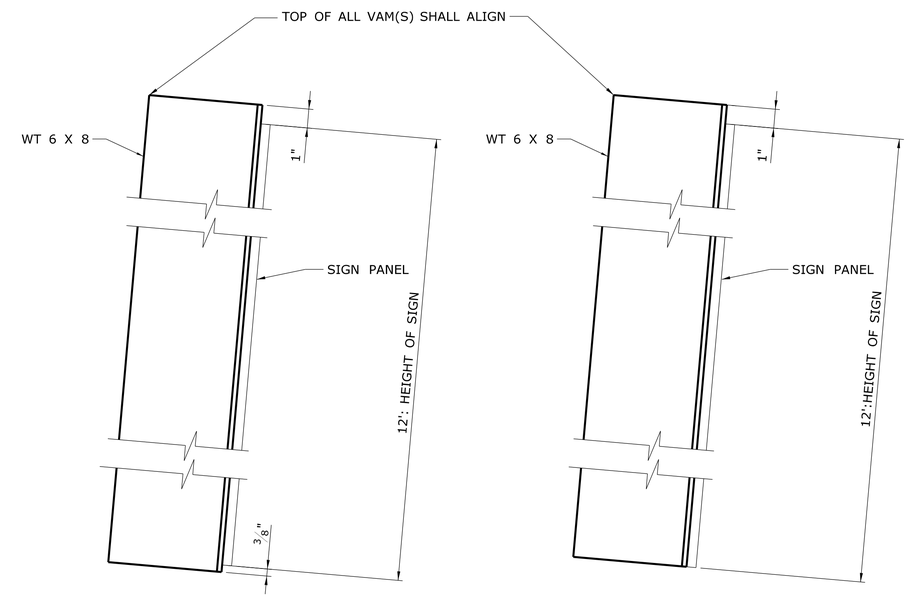

WITH SIGN STOP **NO SIGN STOP**

LENGTH OF VERTICAL ATTACHMENT MEMBERS - VAM(S)

NTS

REV.	DATE	REVISION DESCRIPTION	SHEET NO.
-	-	-	-
-	-	-	-
-	-	-	-
-	-	-	-
-	-	-	-
-	-	-	-

THE INFORMATION, INCLUDING ESTIMATED QUANTITIES OF WORK, SHOWN ON THESE SHEETS IS BASED ON LIMITED INVESTIGATIONS BY THE STATE AND IS IN NO WAY WARRANTED TO INDICATE THE CONDITIONS OF ACTUAL QUANTITIES OF WORK WHICH WILL BE REQUIRED.

Plotted Date: 12/17/2012

DESIGNER/DRAFTER: EWP

CHECKED BY: RDD

SCALE AS NOTED

STATE OF CONNECTICUT
DEPARTMENT OF TRANSPORTATION

Filename: ...\01703065_SB_Structure Mounted Support -13.dgn

SIGNATURE/ BLOCK:

OFFICE OF ENGINEERING

APPROVED BY:

PROJECT TITLE:

REPLACEMENT OF OVERHEAD SIGN SUPPORTS ON VARIOUS ROUTES STATEWIDE

TOWN: NEW BRITAIN

DRAWING TITLE: STRUCTURE MOUNTED SIGN SUPPORT - 13

PROJECT NO. 170-3065

DRAWING NO. S-14

SHEET NO. 04.14

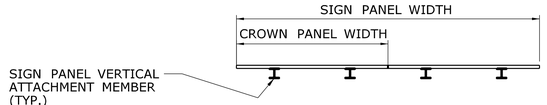

PLAN - OVERHEAD MOUNTED SIGN PANEL

SCALE: 1/4" = 1'- 0"

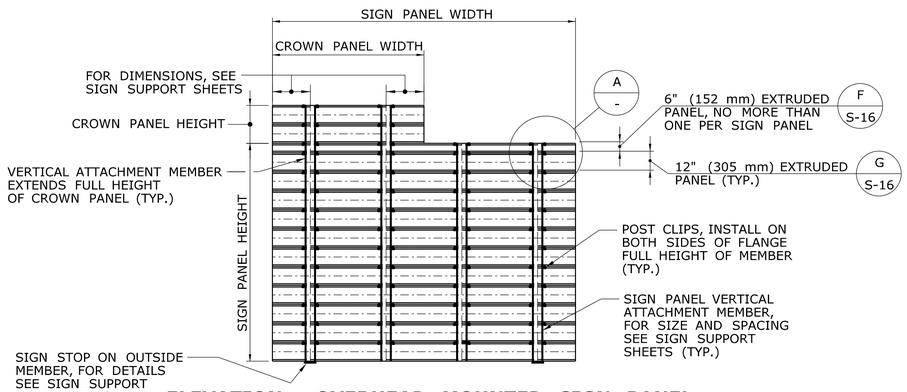

ELEVATION - OVERHEAD MOUNTED SIGN PANEL (REAR FACE)

SCALE: 1/4" = 1'- 0"

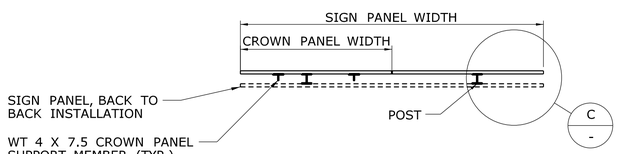

PLAN - SIDE MOUNTED SIGN PANEL

SCALE: 1/4" = 1'- 0"

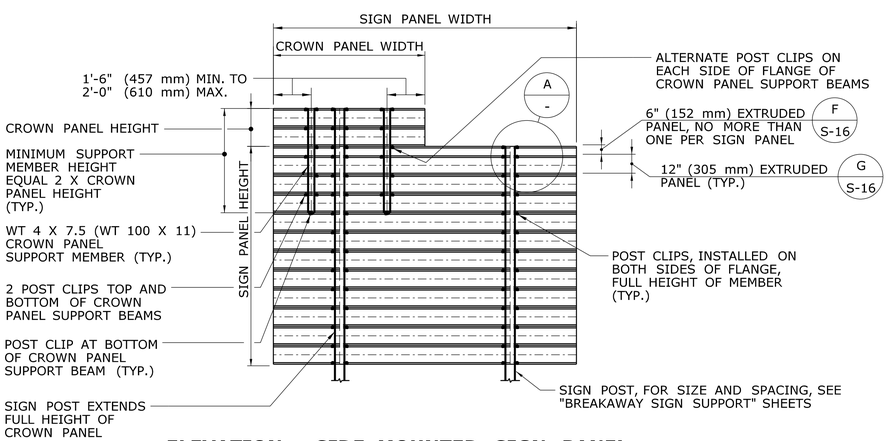

ELEVATION - SIDE MOUNTED SIGN PANEL (REAR FACE)

SCALE: 1/4" = 1'- 0"

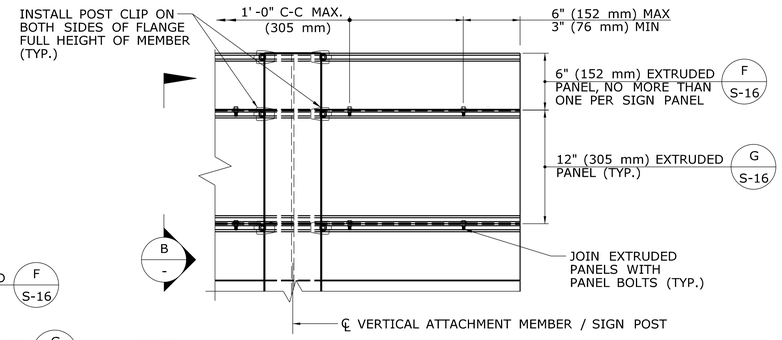

NOTE:

THE EXTRUDED ALUMINUM SIGN PANELS SHALL BE CONNECTED TOGETHER WITH PANELS BOLTS INSTALLED IN ACCORDANCE WITH THE SPACING CRITERIA SHOWN. IF THE PANEL BOLTS CANNOT BE INSTALLED DUE TO MISALIGNED HOLES, A NEW HOLE(S) SHALL BE INSTALLED IN THE FLANGE OF THE EXTRUDED PANEL. THE NEW HOLE(S) SHALL BE A MINIMUM OF 2" (50 mm) FROM ANY EXISTING PANEL BOLT HOLES.

SIGN PANEL CONNECTION DETAILS

A -

SCALE: 1 1/2" = 1'-0"

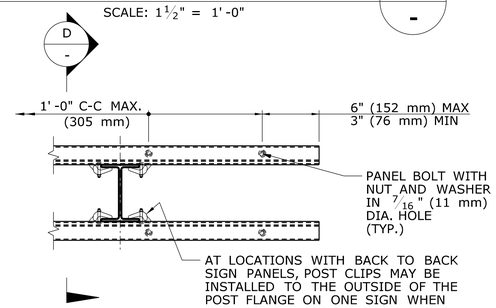

PLAN - PANEL BOLT

C -

SCALE: 1 1/2" = 1'-0"

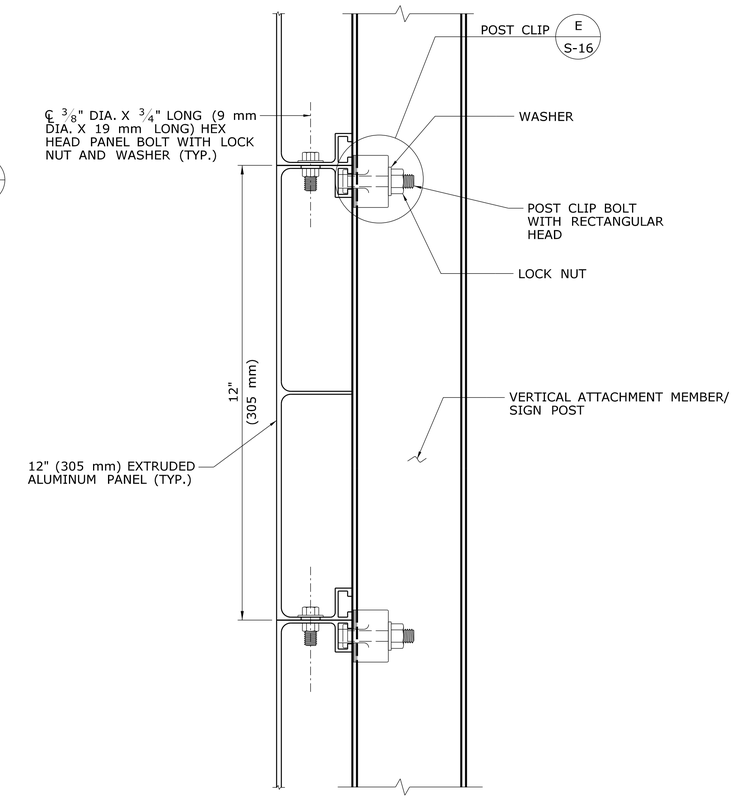

SECTION - SIGN PANEL CONNECTION

B -

SCALE: 6" = 1'-0"

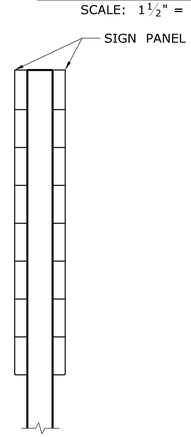

SIDE VIEW

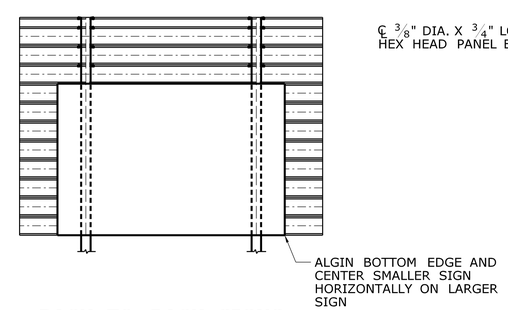

BACK TO BACK SIGNS DIFFERENT SIZES

SCALE: 1/4" = 1'- 0"

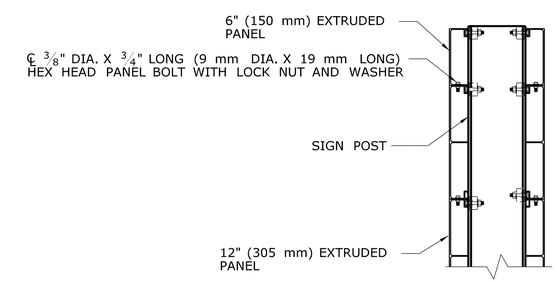

SECTION - DOUBLE PANELS

D -

SCALE: 1 1/2" = 1'-0"

REV.	DATE	REVISION DESCRIPTION	SHEET NO.

THE INFORMATION, INCLUDING ESTIMATED QUANTITIES OF WORK, SHOWN ON THESE SHEETS IS BASED ON LIMITED INVESTIGATIONS BY THE STATE AND IS IN NO WAY WARRANTED TO INDICATE THE CONDITIONS OF ACTUAL QUANTITIES OF WORK WHICH WILL BE REQUIRED.

Plotted Date: 12/17/2012

DESIGNER/DRAFTER: MDG
CHECKED BY: RDD
SCALE AS NOTED

STATE OF CONNECTICUT
DEPARTMENT OF TRANSPORTATION

Filename: ...\01703065_SB_ExtrudedAlSignPanel_ConnectionDetails.dgn

SIGNATURE/ BLOCK: OFFICE OF ENGINEERING
APPROVED BY:

PROJECT TITLE: REPLACEMENT OF OVERHEAD SIGN SUPPORTS ON VARIOUS ROUTES STATEWIDE

TOWN: VARIOUS

DRAWING TITLE: EXTRUDED ALUMINUM SIGN PANEL CONNECTION DETAILS

PROJECT NO. 170-3065
DRAWING NO. S-15
SHEET NO. 04.15

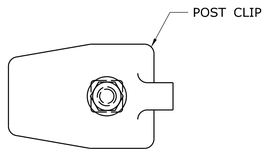

PLAN

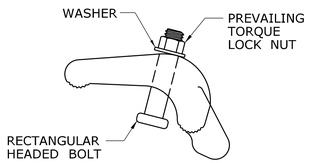

ELEVATION

POST CLIP DETAIL E -
FULL SCALE

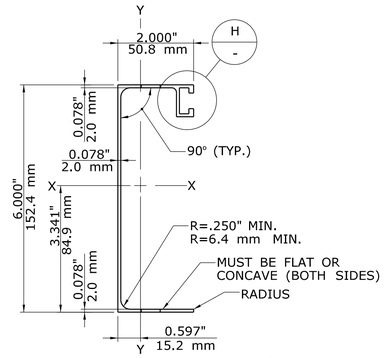

6" (150 mm) EXTRUDED PANEL F -
SCALE: 6" = 1-0'

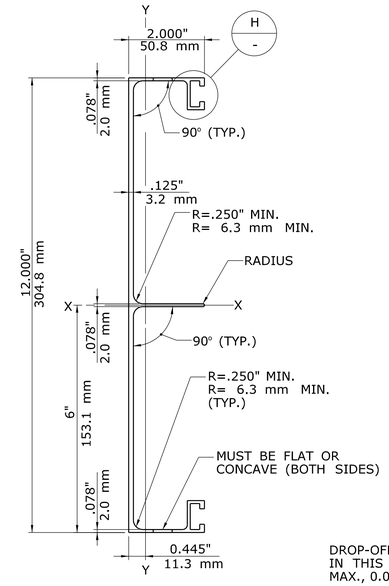

ALTERNATE A

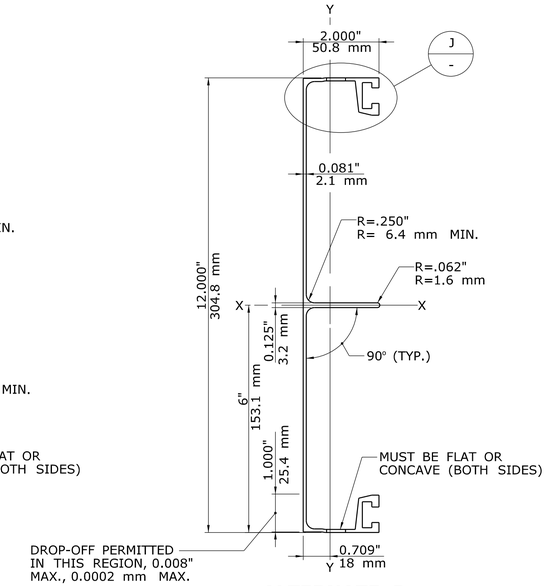

ALTERNATE B

12" (305 mm) EXTRUDED PANEL G -
SCALE: 6" = 1-0'

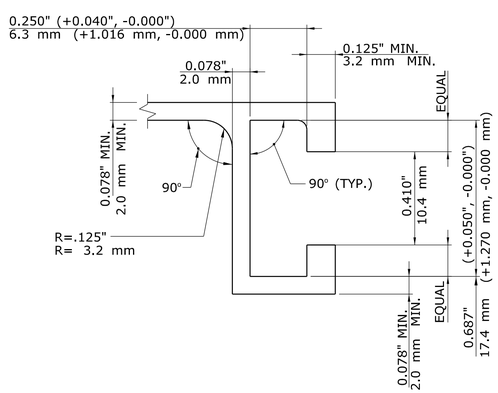

DETAIL H -
SCALE: 3 X FULL SCALE

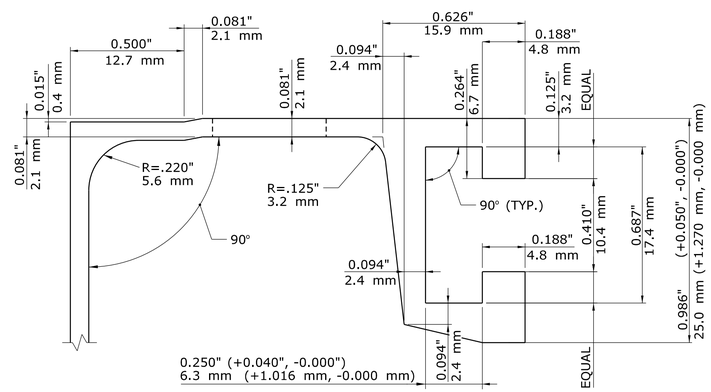

DETAIL J -
SCALE: 3 X FULL SCALE

NOTES:

THE EXTRUDED PANELS SHALL CONFORM TO THE REQUIREMENTS ASTM B221, ALLOY 6063-T6 AND THE FOLLOWING SECTION PROPERTIES:

SECTION	AREA OF SECTION in^2 (mm^2)	WT. / FT. LBS. / FT. (KG / M)	I_{X-X} in^4 (mm^4)	I_{Y-Y} in^4 (mm^4)
6" (150 mm) EXTRUDED PANEL	0.933 (601.93)	1.13 (0.16)	5.023 (2 090 730)	0.473 (196 877)
12" (305 mm) EXTRUDED PANEL ALTERNATE A	2.237 (1443.22)	2.72 (0.38)	36.284 (15 102 541)	0.941 (391 674)
12" (305 mm) EXTRUDED PANEL ALTERNATE B	2.091 (1349.03)	2.54 (0.35)	38.947 (16 210 965)	1.183 (492 402)

THE PANEL BOLTS SHALL CONFORM TO ASTM A193, CLASS 1, GRADE B8 (TYPE 304). THE NUTS SHALL BE A COMPATIBLE HEX, PREVAILING TORQUE (NYLON INSERT) LOCK NUTS CONFORMING TO ASTM A194, CLASS 1, GRADE B8 (TYPE 304). THE WASHERS SHALL BE A COMPATIBLE, FLAT, CIRCULAR WASHERS CONFORMING TO ASTM A276, TYPE 304, ANNEALED.

THE POST CLIP ASSEMBLY SHALL COMPOSED OF A POST CLIP AND A BOLT WITH A NUT AND WASHER. THE POST CLIP SHALL CONFORM TO THE REQUIREMENTS OF ASTM B26, ALLOY 356.0-T6. THE POST BOLT SHALL BE A $^3/_8$" DIA. X $1^3/_4$" LONG (9 mm DIA. X 44 mm LONG) RECTANGULAR HEAD BOLT CONFORMING TO ASTM A193, CLASS 1, GRADE B8 (TYPE 304). THE NUT SHALL BE A COMPATIBLE HEX, PREVAILING TORQUE (NYLON INSERT) LOCK NUT CONFORMING TO ASTM A194, CLASS 1, GRADE B8 (TYPE 304). THE WASHER SHALL BE A COMPATIBLE, FLAT, CIRCULAR WASHER CONFORMING TO ASTM A276, TYPE 304, ANNEALED. THE DIMENSIONS OF THE RECTANGULAR BOLT HEAD SHALL BE SUCH THAT IT WILL FIT INTO THE EXTRUDED PANEL SLOT AND WILL NOT ROTATE WHILE THE NUT IS BEING TURNED.

THE COST OF FURNISHING AND INSTALLING THE EXTRUDED ALUMINUM SIGN AND CROWN PANELS, INCLUDING THE PANELS BOLTS AND POST CLIP ASSEMBLIES, SHALL BE PAID FOR UNDER THE ITEM "SIGN FACE - EXTRUDED ALUMINUM (TYPE IV RETROREFLECTIVE SHEETING)".

REV.	DATE	REVISION DESCRIPTION	SHEET NO.

THE INFORMATION, INCLUDING ESTIMATED QUANTITIES OF WORK, SHOWN ON THESE SHEETS IS BASED ON LIMITED INVESTIGATIONS BY THE STATE AND IS IN NO WAY WARRANTED TO INDICATE THE CONDITIONS OF ACTUAL QUANTITIES OF WORK WHICH WILL BE REQUIRED.

Plotted Date: 12/17/2012

DESIGNER/DRAFTER: MDG
CHECKED BY: RDD
SCALE AS NOTED

STATE OF CONNECTICUT
DEPARTMENT OF TRANSPORTATION

Filename: ...\01703065_SB_ExtrudedAlSignPanel_ManufacturingDetails.dgn

SIGNATURE/ BLOCK: OFFICE OF ENGINEERING
APPROVED BY:

PROJECT TITLE: REPLACEMENT OF OVERHEAD SIGN SUPPORTS ON VARIOUS ROUTES STATEWIDE

TOWN: VARIOUS

DRAWING TITLE: EXTRUDED ALUMINUM SIGN PANEL MANUFACTURING DETAILS

PROJECT NO. 170-3065
DRAWING NO. S-16
SHEET NO. 04.16

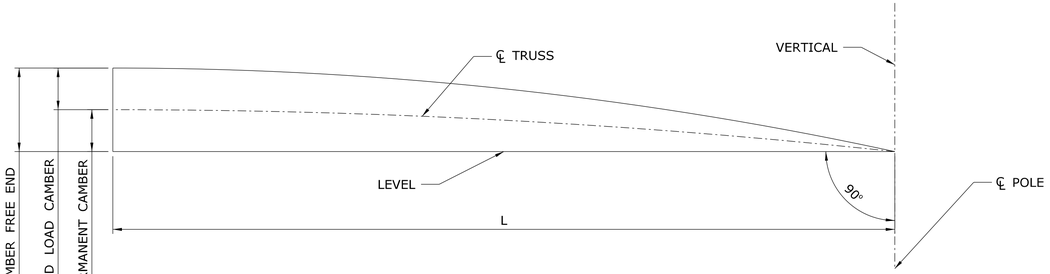

CAMBER DIAGRAM

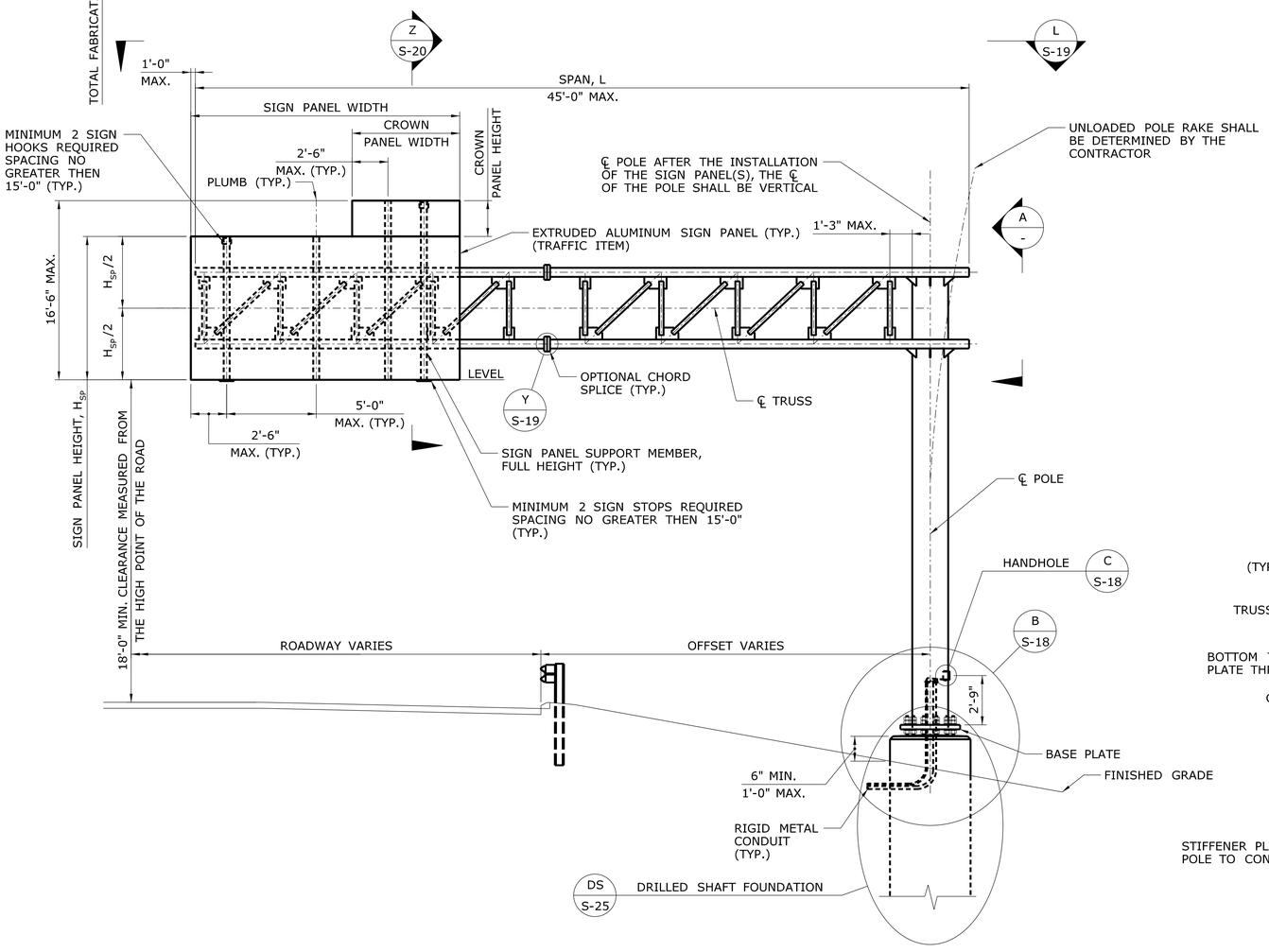

ELEVATION

SCALE: 1/4" = 1'-0"

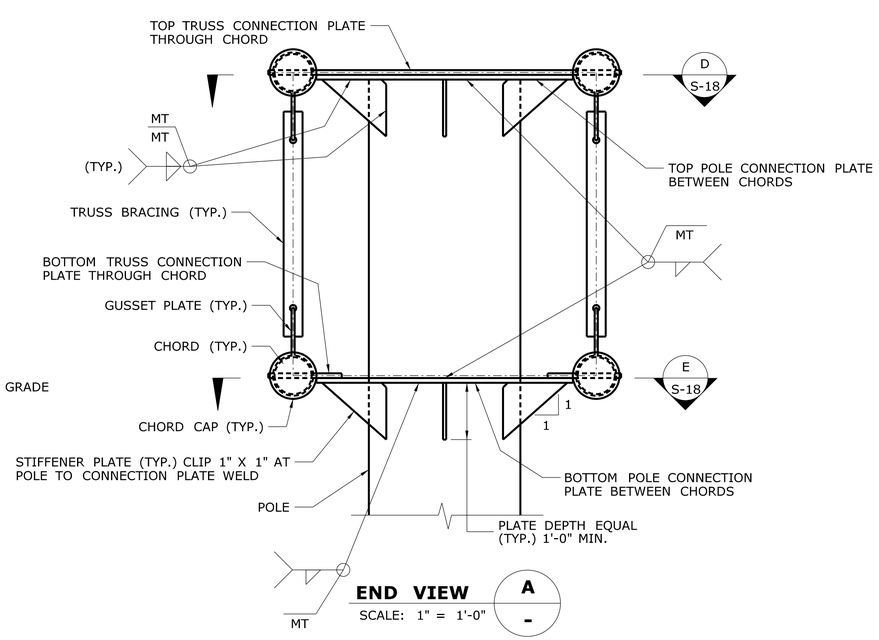

END VIEW

SCALE: 1" = 1'-0"

NOTES

THE 4 CHORD TRUSS CANTILEVER SIGN STRUCTURE, INCLUDING THE ANCHORAGE TO THE FOUNDATION AND THE HARDWARE AND STRUCTURAL MEMBERS REQUIRED TO SUPPORT THE TRAFFIC APPURTENANCES, SHALL BE DESIGNED, FABRICATED, ERECTED, ASSEMBLED AND INSTALLED BY THE CONTRACTOR IN ACCORDANCE WITH THE SPECIAL PROVISION "4 CHORD TRUSS CANTILEVER SIGN STRUCTURE".

THE 4 CHORD TRUSS CANTILEVER SIGN STRUCTURE SHALL BE COMPOSED OF A 4 CHORD TRUSS HORIZONTAL OVERHEAD SPAN MEMBER SUPPORTED ON A SINGLE LINEAR TUBULAR POLE MEMBER.

THE DETAILS PRESENTED AND REFERRED TO ON THIS SHEET REPRESENT CONCEPTUAL DETAILS OF A SIGN SUPPORT CONSISTENT WITH THE REQUIREMENTS IN THE SPECIFICATIONS. THE CONTRACTOR IS RESPONSIBLE FOR DETERMINING ALL DETAILS AND DIMENSIONS.

THE APPROXIMATE DIMENSIONS OF THE HORIZONTAL TRUSS AND THE POLE HEIGHTS ARE SHOWN IN PLAN AND ELEVATION ON THE TRAFFIC SHEETS. THE ACTUAL SIGN SUPPORT DIMENSIONS SHALL BE DETERMINED BY THE CONTRACTOR BASED ON A THE HORIZONTAL AND VERTICAL CLEARANCES SHOWN ON THE TRAFFIC SHEETS, A FIELD SURVEY OF THE FINISHED GRADE AT THE SITE, THE ELEVATION OF THE TOP OF THE FINISHED FOUNDATION, THE LOCATIONS OF OVERHEAD AND SUBSURFACE UTILITIES, THE LOCATION OF THE DRAINAGE FACILITIES AND NOISE BARRIER WALL LOCATIONS.

THE SIGN PANELS, INCLUDING CROWN PANELS AS APPLICABLE, SHALL BE LOCATED ON THE HORIZONTAL TRUSS BASED ON THE DIMENSIONS SHOWN ON THE TRAFFIC SHEETS AND THE ACTUAL SIGN SUPPORT DIMENSIONS. THE SIGN PANELS SHALL BE INSTALLED SYMMETRICALLY ABOUT THE CENTERLINE OF THE TRUSS. THE NUMBER AND SPACING OF PANEL SUPPORT MEMBERS SHALL BE DETERMINED BY THE CONTRACTOR BASED ON THE WIDTH OF THE SIGN AND CROWN PANELS AND THE SUPPORT MEMBER SPACING PARAMETERS. SIGN PANELS SHALL BE SUPPORTED BY NO LESS THAN 3 SUPPORT MEMBERS. CROWN PANELS SHALL BE SUPPORTED BY NO LESS THAN 2 SUPPORT MEMBERS.

THE CONTRACTOR SHALL BE RESPONSIBLE FOR THE PROPER FIT OF THE SIGN SUPPORT STRUCTURES ON THE CONSTRUCTED FOUNDATIONS. PRIOR TO FABRICATION, THE CONTRACTOR SHALL TAKE FIELD MEASUREMENTS TO VERIFY ALL SIGN SUPPORT DIMENSIONS DEPENDANT UPON THE CONSTRUCTED FOUNDATIONS. THE OVERHEAD MEMBER SHALL BE TEMPORARILY SUPPORTED, IN ORDER TO BRING ALL PLATES OF THE CONNECTIONS INTO FIRM CONTACT, WHILE THE HIGH STRENGTH BOLTS ARE INSTALLED AND TENSIONED. THE CONTRACTOR SHALL TAKE THE PROPER PRECAUTIONS TO ENSURE THE STABILITY OF ALL STRUCTURAL ELEMENTS UNTIL THE TOTAL STRUCTURE IS ERECTED.

THE COST OF THE TUBULAR STEEL MEMBERS, STRUCTURAL STEEL ROLLED SHAPES, PLATES AND BARS, HIGH-STRENGTH BOLTS AND ANCHORAGE MATERIALS, INCLUDING THE DESIGN, FABRICATION, COATING AND ERECTION, SHALL BE PAID FOR UNDER THE ITEM "4 CHORD TRUSS CANTILEVER SIGN STRUCTURE". THE COST OF FOUNDATION EXCAVATION, REINFORCEMENT AND CONCRETE, INCLUDING THE DESIGN AND FABRICATION, SHALL BE PAID FOR UNDER THE ITEM "DRILLED SHAFT TRAFFIC STRUCTURE FOUNDATION".

REV.	DATE	REVISION DESCRIPTION	SHEET NO.

THE INFORMATION, INCLUDING ESTIMATED QUANTITIES OF WORK, SHOWN ON THESE SHEETS IS BASED ON LIMITED INVESTIGATIONS BY THE STATE AND IS IN NO WAY WARRANTED TO INDICATE THE CONDITIONS OF ACTUAL QUANTITIES OF WORK WHICH WILL BE REQUIRED.

Plotted Date: 12/17/2012

DESIGNER/DRAFTER: MDG
CHECKED BY: RDD
SCALE AS NOTED

STATE OF CONNECTICUT
DEPARTMENT OF TRANSPORTATION

Filename: ...\SB_QCS-1_Elevation.dgn

SIGNATURE/BLOCK: OFFICE OF ENGINEERING
APPROVED BY:

PROJECT TITLE: REPLACEMENT OF OVERHEAD SIGN SUPPORTS ON VARIOUS ROUTES STATEWIDE

TOWN: VARIOUS

DRAWING TITLE: 4 CHORD TRUSS CANTILEVER GENERAL PLAN

PROJECT NO. 170-3065
DRAWING NO. S-17
SHEET NO. 04.17

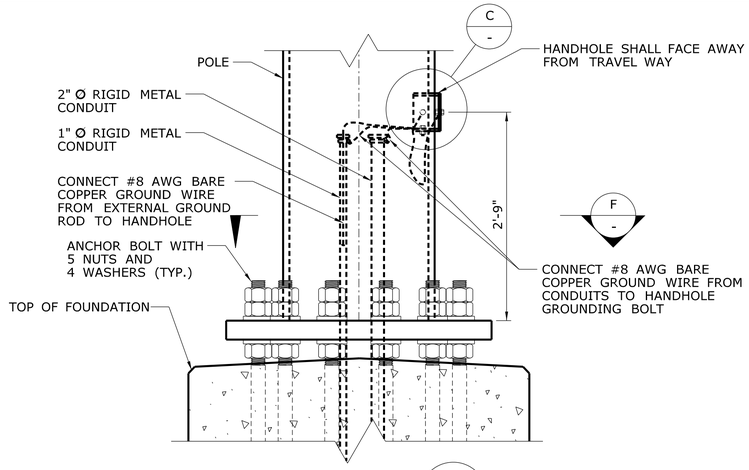

DETAIL B
SCALE: 1" = 1'-0"

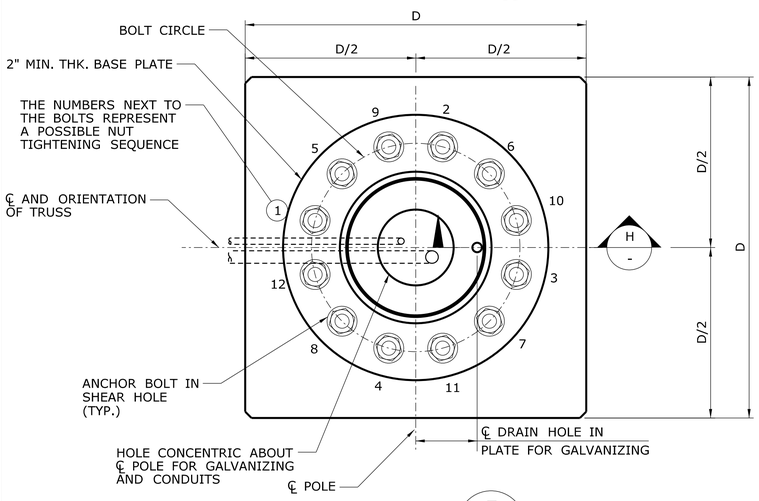

SECTION F
SCALE: 1" = 1'-0"

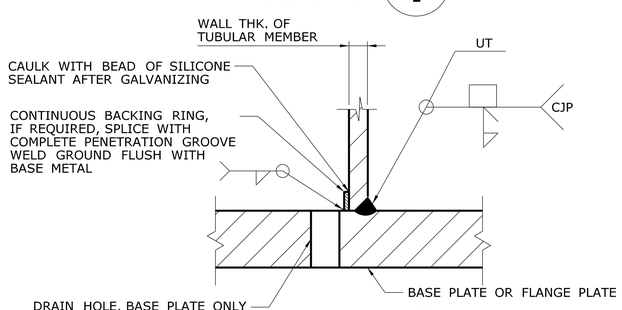

DETAIL H
SCALE: 3" = 1'-0"

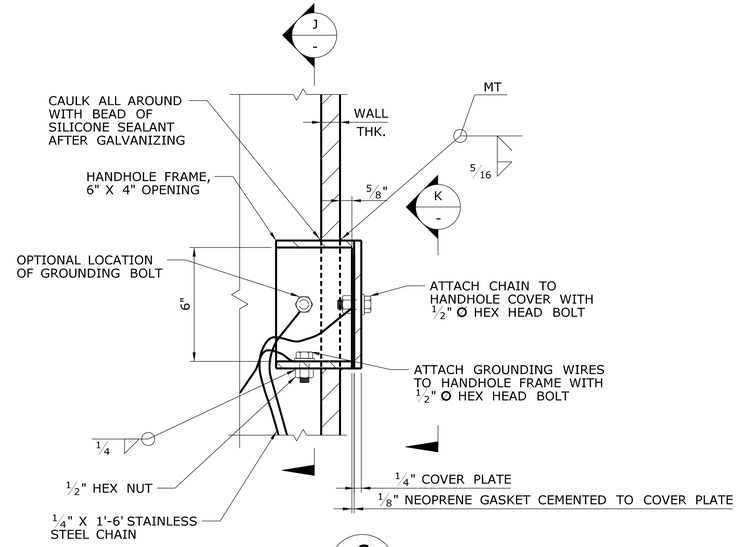

DETAIL C
SCALE: 3" = 1'-0"

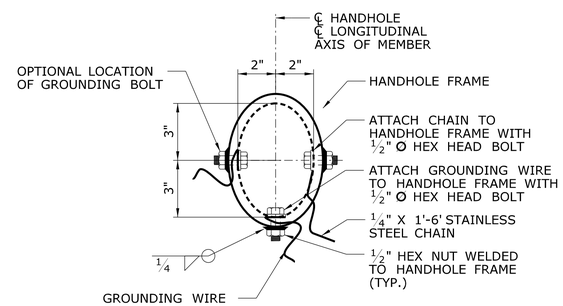

SECTION J
SCALE: 3" = 1'-0"

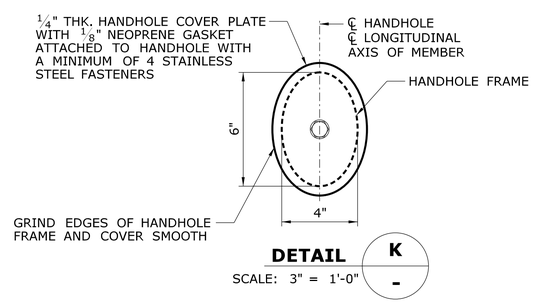

DETAIL K
SCALE: 3" = 1'-0"

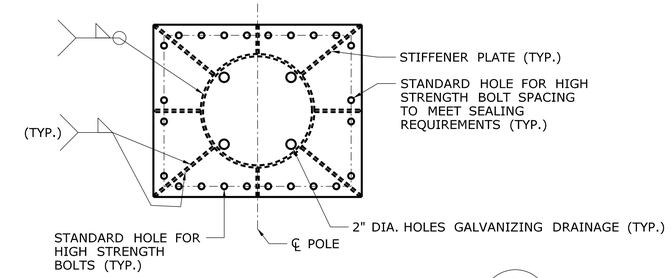

SECTION - TOP CONNECTION PLATE D -
SCALE: 3/4" = 1'-0"

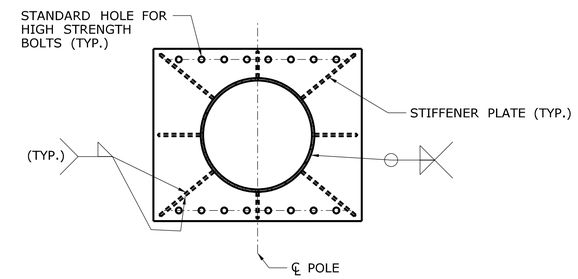

SECTION - BOTTOM CONECTION PLATE E -
SCALE: 3/4" = 1'-0"

REV.	DATE	REVISION DESCRIPTION	SHEET NO.

THE INFORMATION, INCLUDING ESTIMATED QUANTITIES OF WORK, SHOWN ON THESE SHEETS IS BASED ON LIMITED INVESTIGATIONS BY THE STATE AND IS IN NO WAY WARRANTED TO INDICATE THE CONDITIONS OF ACTUAL QUANTITIES OF WORK WHICH WILL BE REQUIRED.

Plotted Date: 12/17/2012

DESIGNER/DRAFTER: MDG
CHECKED BY: RDD
SCALE AS NOTED

STATE OF CONNECTICUT
DEPARTMENT OF TRANSPORTATION

Filename: ...\SB_QCS-2_Details_1.dgn

SIGNATURE/ BLOCK:
OFFICE OF ENGINEERING
APPROVED BY:

PROJECT TITLE:
REPLACEMENT OF OVERHEAD SIGN SUPPORTS ON VARIOUS ROUTES STATEWIDE

TOWN: VARIOUS

DRAWING TITLE:
4 CHORD TRUSS CANTILEVER DETAILS-1

PROJECT NO. 170-3065
DRAWING NO. S-18
SHEET NO. 04.18

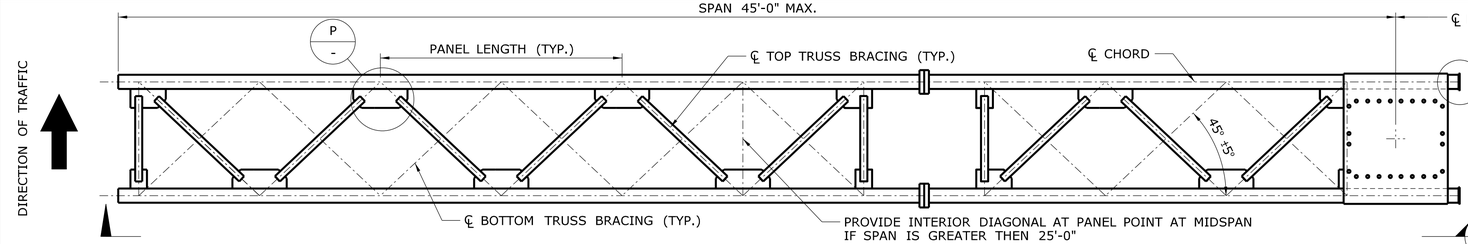

PLAN L
SCALE: 3/8" = 1'-0"

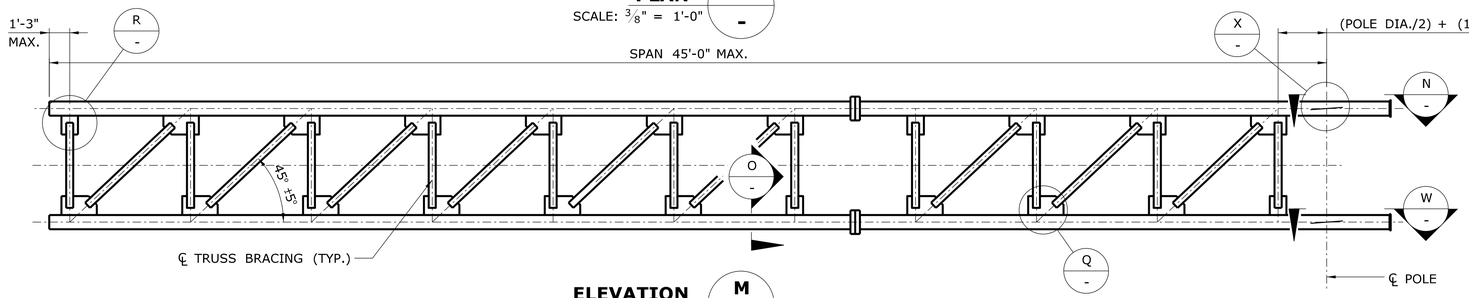

ELEVATION M
SCALE: 3/8" = 1'-0"

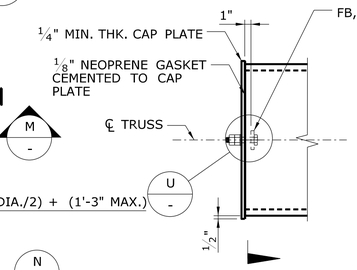

DETAIL S
SCALE: 1" = 1'-0"

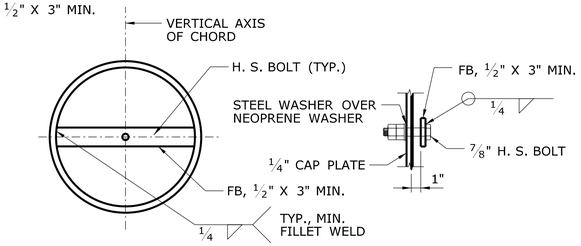

SECTION T
SCALE: 1" = 1'-0"

DETAIL U
SCALE: 1 1/2" = 1'-0"

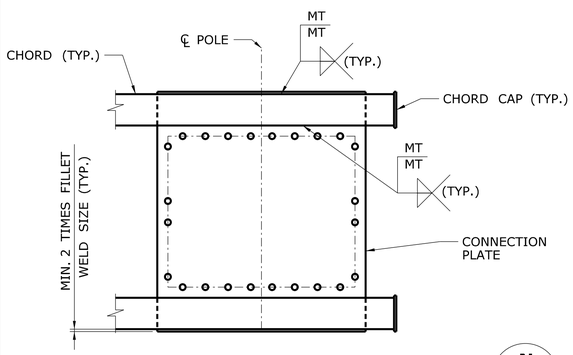

VIEW - TOP TRUSS CONNECTION PLATE N
SCALE: 3/4" = 1'-0"

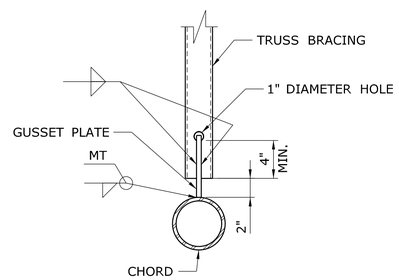

SECTION O
SCALE: 1 1/2" = 1'-0"

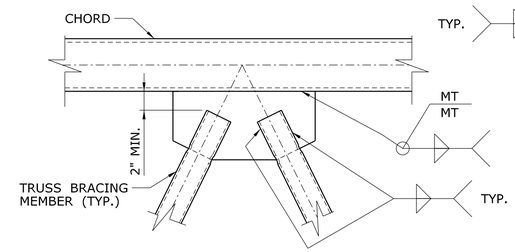

GUSSET PLATE DETAIL P
SCALE: 1 1/2" = 1'-0"

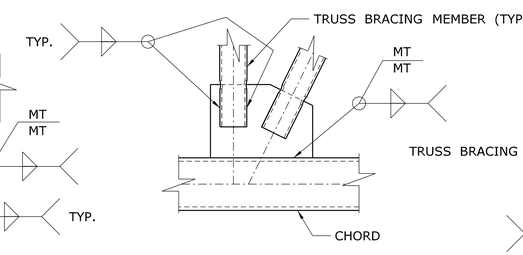

GUSSET PLATE DETAIL Q
SCALE: 1 1/2" = 1'-0"

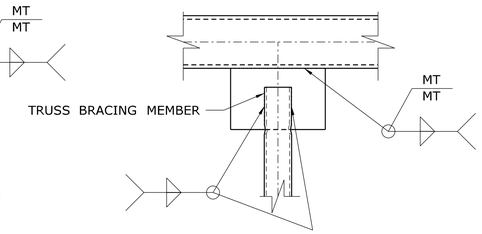

GUSSET PLATE DETAIL R
SCALE: 1 1/2" = 1'-0"

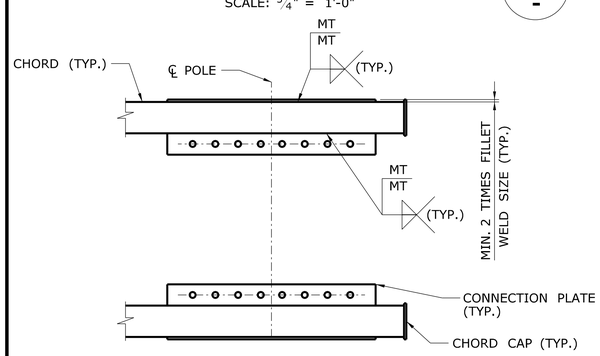

VIEW - BOTTOM TRUSS CONNECTION PLATE W
SCALE: 3/4" = 1'-0"

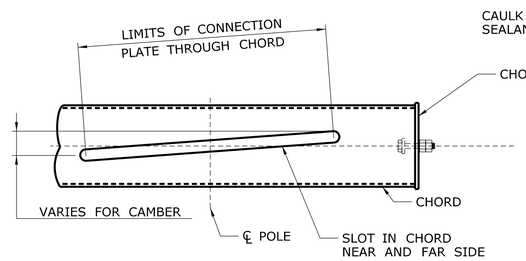

SLOTTED CHORD DETAIL X
SCALE: 1 1/2" = 1'-0"

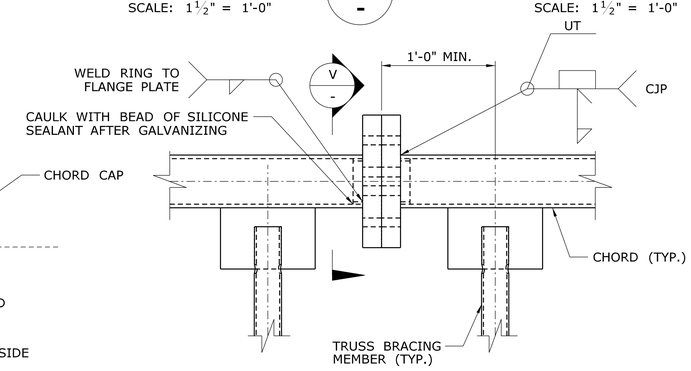

CHORD SPLICE Y
SCALE: 1 1/2" = 1'-0"

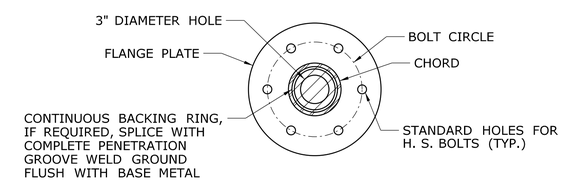

SECTION V
SCALE: 1 1/2" = 1'-0"

REV.	DATE	REVISION DESCRIPTION	SHEET NO.

THE INFORMATION, INCLUDING ESTIMATED QUANTITIES OF WORK, SHOWN ON THESE SHEETS IS BASED ON LIMITED INVESTIGATIONS BY THE STATE AND IS IN NO WAY WARRANTED TO INDICATE THE CONDITIONS OF ACTUAL QUANTITIES OF WORK WHICH WILL BE REQUIRED.

Plotted Date: 12/17/2012

DESIGNER/DRAFTER: MDG
CHECKED BY: RDD
SCALE AS NOTED

STATE OF CONNECTICUT
DEPARTMENT OF TRANSPORTATION

Filename: ...\SB_QCS-3_Details_2.dgn

SIGNATURE/BLOCK: OFFICE OF ENGINEERING
APPROVED BY:

PROJECT TITLE: REPLACEMENT OF OVERHEAD SIGN SUPPORTS ON VARIOUS ROUTES STATEWIDE

TOWN: VARIOUS

DRAWING TITLE: 4 CHORD TRUSS CANTILEVER DETAILS-2

PROJECT NO. 170-3065
DRAWING NO. S-19
SHEET NO. 04.19

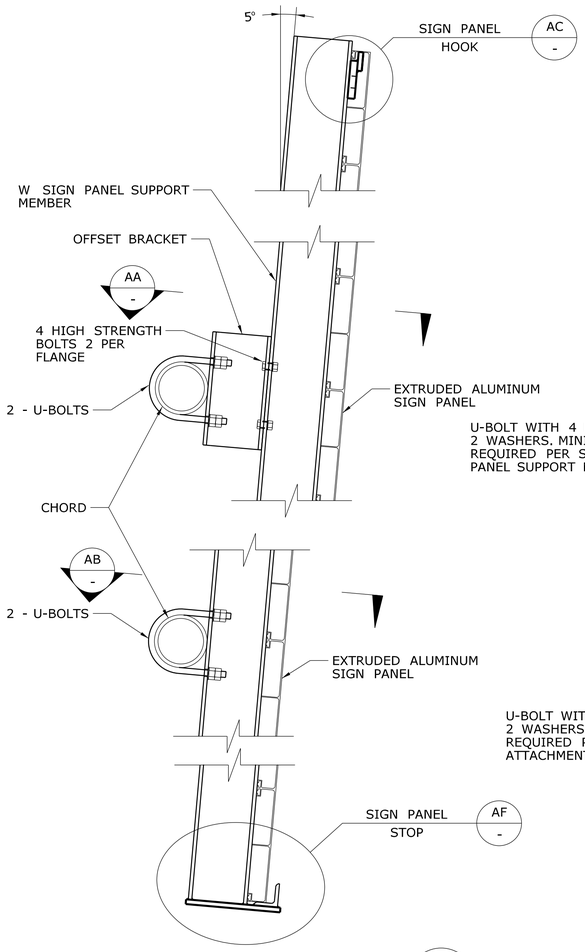

VERTICAL ATTACHMENT DETAIL Z -

SCALE: 1½" = 1'-0"

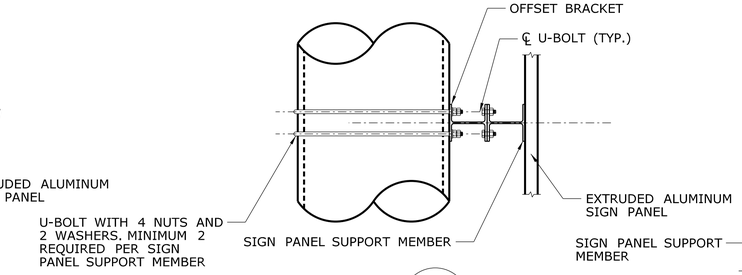

SECTION AA -

SCALE: 1" = 1'-0"

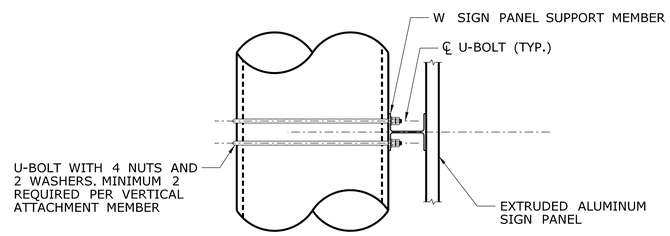

SECTION AB -

SCALE: 1" = 1'-0"

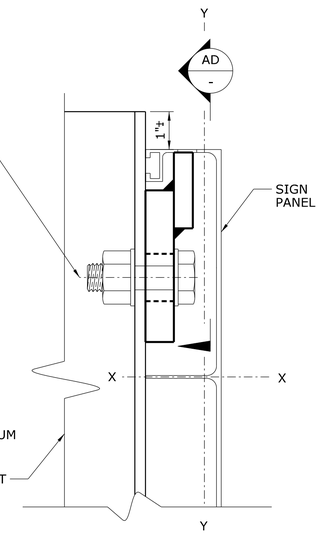

DETAIL AC -

SCALE: 6" = 1'-0"

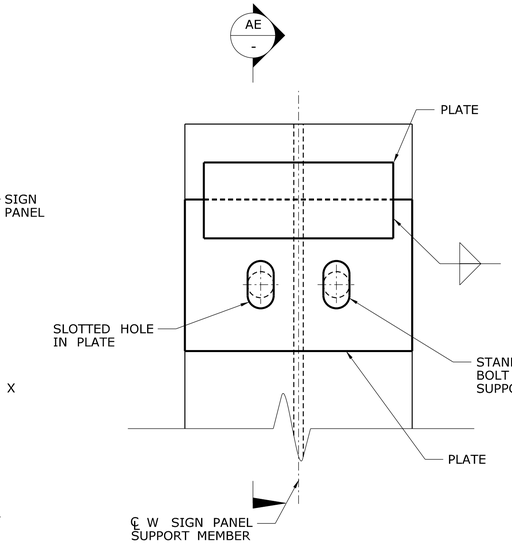

SECTION AD -

SCALE: 6" = 1'-0"

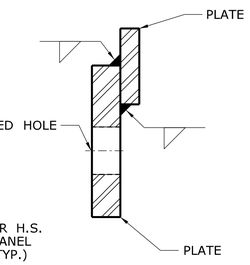

SECTION AE -

SCALE: 6" = 1'-0"

TYPICAL SIGN HOOK DETAILS

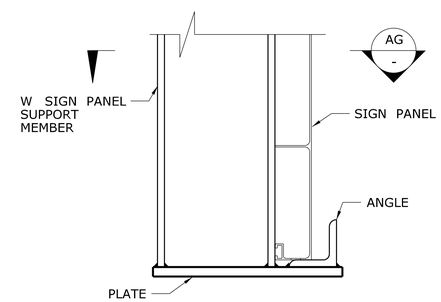

DETAIL AF -

SCALE: 3" = 1'-0"

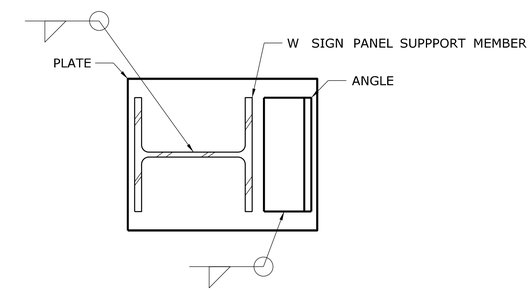

DETAIL AG -

SCALE: 3" = 1'-0"

TYPICAL SIGN STOP DETAILS

REV.	DATE	REVISION DESCRIPTION	SHEET NO.

THE INFORMATION, INCLUDING ESTIMATED QUANTITIES OF WORK, SHOWN ON THESE SHEETS IS BASED ON LIMITED INVESTIGATIONS BY THE STATE AND IS IN NO WAY WARRANTED TO INDICATE THE CONDITIONS OF ACTUAL QUANTITIES OF WORK WHICH WILL BE REQUIRED.

Plotted Date: 12/17/2012

DESIGNER/DRAFTER: MDG

CHECKED BY: RDD

SCALE AS NOTED

STATE OF CONNECTICUT
DEPARTMENT OF TRANSPORTATION

Filename: ...\SB_QCS-4_Details_3.dgn

SIGNATURE/BLOCK: OFFICE OF ENGINEERING

APPROVED BY:

PROJECT TITLE: REPLACEMENT OF OVERHEAD SIGN SUPPORTS ON VARIOUS ROUTES STATEWIDE

TOWN: VARIOUS

DRAWING TITLE: 4 CHORD TRUSS CANTILEVER DETAILS-3

PROJECT NO. 170-3065

DRAWING NO. S-20

SHEET NO. 04.20

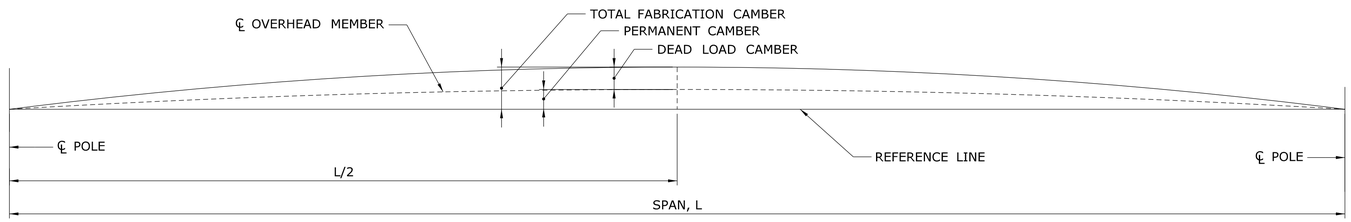

CAMBER DIAGRAM

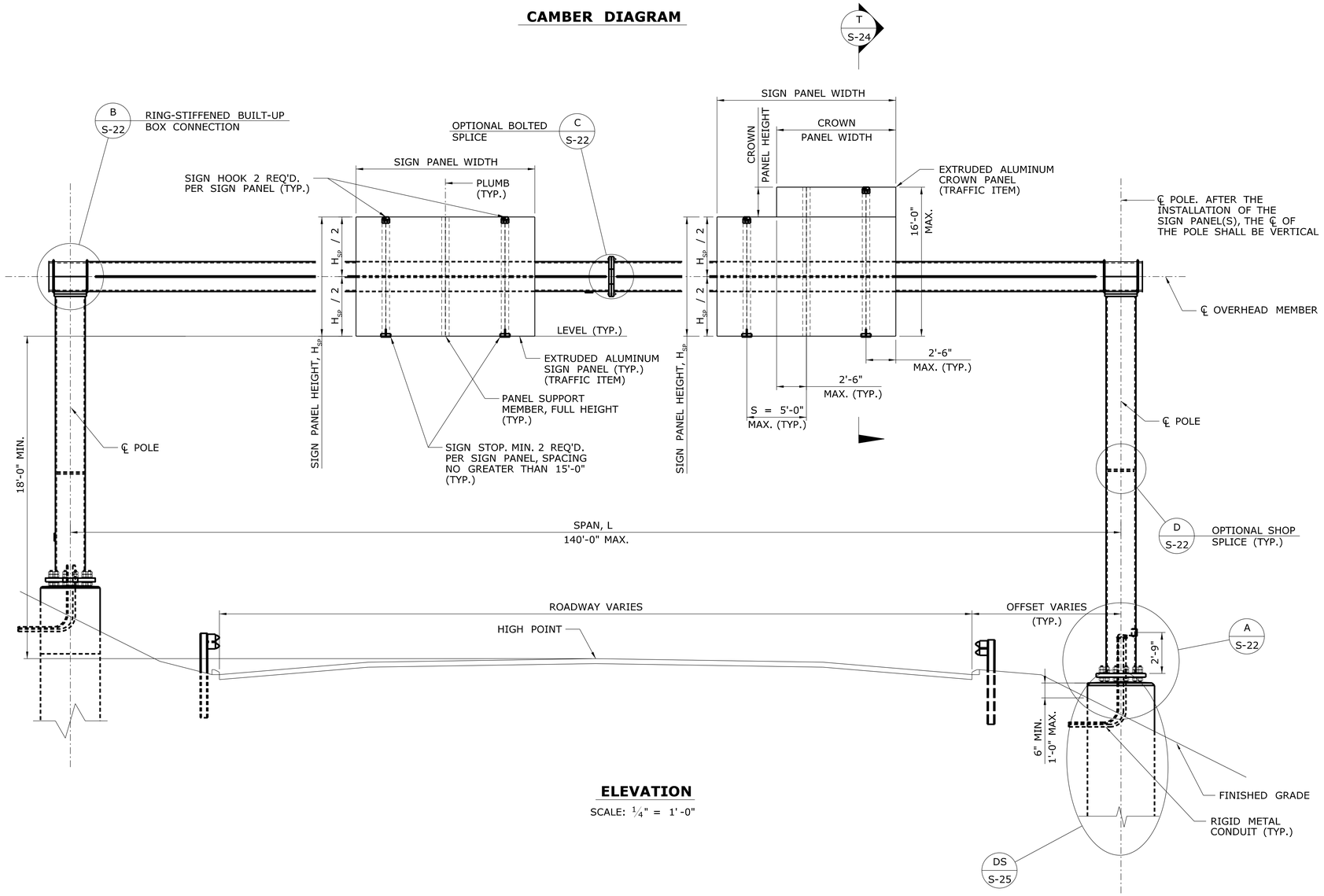

ELEVATION

SCALE: ¼" = 1'-0"

NOTES

THE MONOTUBE BRIDGE SIGN STRUCTURE, INCLUDING THE ANCHORAGE TO THE FOUNDATION AND THE HARDWARE AND STRUCTURAL MEMBERS REQUIRED TO SUPPORT THE TRAFFIC APPURTENENCES, SHALL BE DESIGNED, FABRICATED, ERECTED, ASSEMBLED AND INSTALLED BY THE CONTRACTOR IN ACCORDANCE WITH THE SPECIAL PROVISION "MONOTUBE BRIDGE SIGN STRUCTURE".

THE MONOTUBE BRIDGE SIGN SUPPORT SHALL BE COMPOSED OF A SINGLE LINEAR TUBULAR HORIZONTAL OVERHEAD SPAN MEMBER SUPPORTED ON EACH END BY A SINGLE LINEAR TUBULAR POLE MEMBER.

THE DETAILS PRESENTED AND REFERRED TO ON THIS SHEET REPRESENT CONCEPTUAL DETAILS OF A SIGN SUPPORT CONSISTANT WITH THE REQUIREMENTS IN THE SPECIFICATIONS. THE CONTRACTOR IS RESPONSIBLE FOR DETERMINING ALL DETAILS AND DIMENSIONS.

THE APPROXIMATE DIMENSIONS OF THE HORIZONTAL OVERHEAD SPAN MEMBER AND THE POLE HEIGHTS ARE SHOWN IN PLAN AND ELEVATION ON THE TRAFFIC SHEETS. THE ACTUAL SIGN SUPPORT DIMENSIONS SHALL BE DETERMINED BY THE CONTRACTOR BASED ON A THE HORIZONTAL AND VERTICAL CLEARANCES SHOWN ON THE TRAFFIC SHEETS, A FIELD SURVEY OF THE FINISHED GRADE AT THE SITE, THE ELEVATION OF THE TOP OF THE FINISHED FOUNDATION, THE LOCATIONS OF OVERHEAD AND SUBSURFACE UTILITIES, THE LOCATION OF THE DRAINAGE FACILITIES AND NOISE BARRIER WALL LOCATIONS.

THE SIGN PANELS, INCLUDING CROWN PANELS AS APPLICABLE, SHALL BE LOCATED ON THE HORIZONTAL OVERHEAD SPAN MEMBER BASED ON THE DIMENSIONS SHOWN ON THE TRAFFIC SHEETS AND THE ACTUAL SIGN SUPPORT DIMENSIONS. THE SIGN PANELS SHALL BE INSTALLED SYMMETRICALLY ABOUT THE CENTERLINE OF THE OVERHEAD MEMBER. THE NUMBER AND SPACING OF PANEL SUPPORT MEMBERS SHALL BE DETERMINED BY THE CONTRACTOR BASED ON THE WIDTH OF THE SIGN AND CROWN PANELS AND THE SUPPORT MEMBER SPACING PARAMETERS. SIGN PANELS SHALL BE SUPPORTED BY NO LESS THAN 3 SUPPORT MEMBERS. CROWN PANELS SHALL BE SUPPORTED BY NO LESS THAN 2 SUPPORT MEMBERS.

THE CONTRACTOR SHALL BE RESPONSIBLE FOR THE PROPER FIT OF THE SIGN SUPPORT STRUCTURES ON THE CONSTRUCTED FOUNDATIONS. PRIOR TO FABRICATION, THE CONTRACTOR SHALL TAKE FIELD MEASUREMENTS TO VERIFY ALL SIGN SUPPORT DIMENSIONS DEPENDANT UPON THE CONSTRUCTED FOUNDATIONS. THE OVERHEAD MEMBER SHALL BE TEMPORARILY SUPPORTED, IN ORDER TO BRING ALL PLATES OF THE CONNECTIONS INTO FIRM CONTACT, WHILE THE HIGH STRENGTH BOLTS ARE INSTALLED AND TENSIONED. THE CONTRACTOR SHALL TAKE THE PROPER PRECAUTIONS TO ENSURE THE STABILITY OF ALL STRUCTURAL ELEMENTS UNTIL THE TOTAL STRUCTURE IS ERECTED.

THE COST OF THE TUBULAR STEEL MEMBERS, STRUCTURAL STEEL ROLLED SHAPES, PLATES AND BARS, HIGH-STRENGTH BOLTS AND ANCHORAGE MATERIALS, INCLUDING THE DESIGN, FABRICATION, COATING AND ERECTION, SHALL BE PAID FOR UNDER THE ITEM "MONOTUBE BRIDGE SIGN STRUCTURE". THE COST OF FOUNDATION EXCAVATION, REINFORCEMENT AND CONCRETE, INCLUDING THE DESIGN AND FABRICATION, SHALL BE PAID FOR UNDER THE ITEM "DRILLED SHAFT TRAFFIC STRUCTURE FOUNDATION".

REV.	DATE	REVISION DESCRIPTION	SHEET NO.

THE INFORMATION, INCLUDING ESTIMATED QUANTITIES OF WORK, SHOWN ON THESE SHEETS IS BASED ON LIMITED INVESTIGATIONS BY THE STATE AND IS IN NO WAY WARRANTED TO INDICATE THE CONDITIONS OF ACTUAL QUANTITIES OF WORK WHICH WILL BE REQUIRED.

Plotted Date: 12/17/2012

DESIGNER/DRAFTER: MDG
CHECKED BY: RDD
SCALE AS NOTED

STATE OF CONNECTICUT
DEPARTMENT OF TRANSPORTATION

Filename: ...\SB_MBS-1_Elevation.dgn

SIGNATURE/BLOCK: OFFICE OF ENGINEERING
APPROVED BY:

PROJECT TITLE: REPLACEMENT OF OVERHEAD SIGN SUPPORTS ON VARIOUS ROUTES STATEWIDE

TOWN: VARIOUS

DRAWING TITLE: MONOTUBE BRIDGE TYPE SIGN STRUCTURE

PROJECT NO. 170-3065
DRAWING NO. S-21
SHEET NO. 04.21

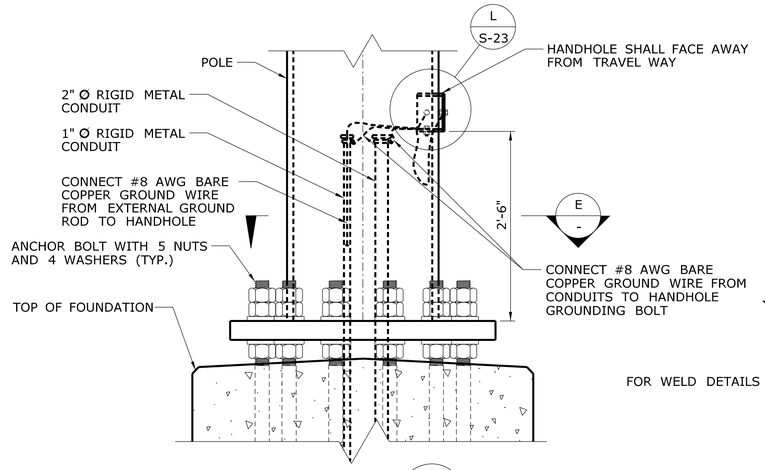

DETAIL A
SCALE: 1" = 1'-0"

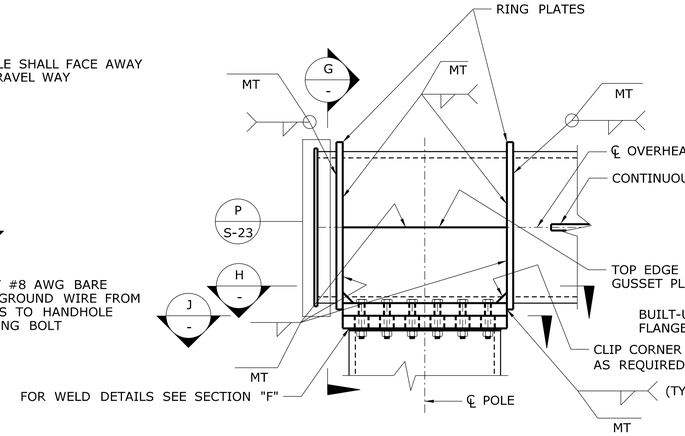

NOTE: TO ASSEMBLE BOX CONNECTION, FIRST FIT-UP & WELD FLANGE PLATE, GUSSET PLATES AND RING PLATES; THEN WELD BOX CONNECTION TO OVERHEAD MEMBER

DETAIL B
SCALE: 1" = 1'-0"

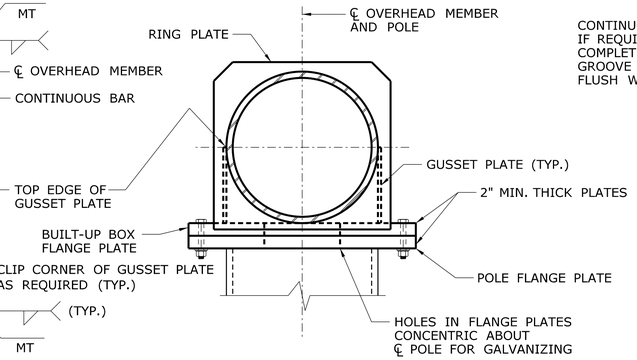

SECTION G
SCALE: 1" = 1'-0"

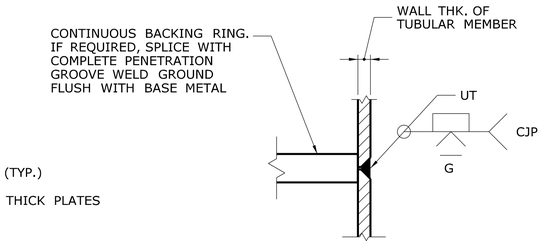

DETAIL D
SCALE: 3" = 1'-0"

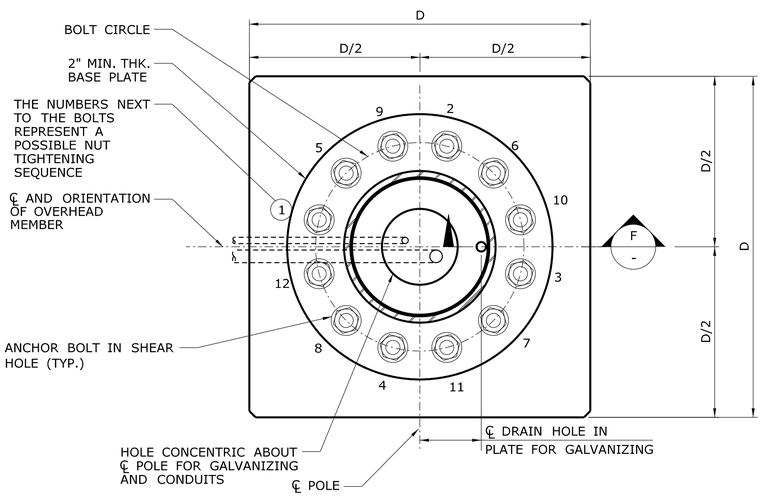

SECTION E
SCALE: 1" = 1'-0"

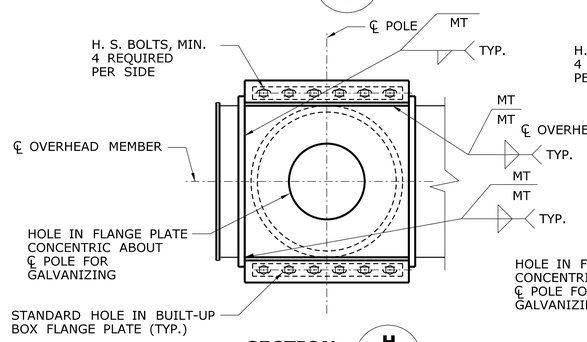

SECTION H
SCALE: 1" = 1'-0"

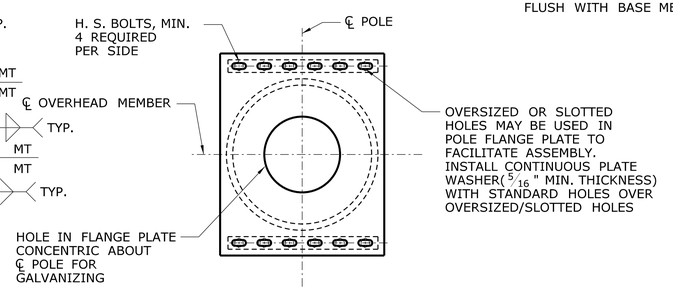

SECTION J
SCALE: 1" = 1'-0"

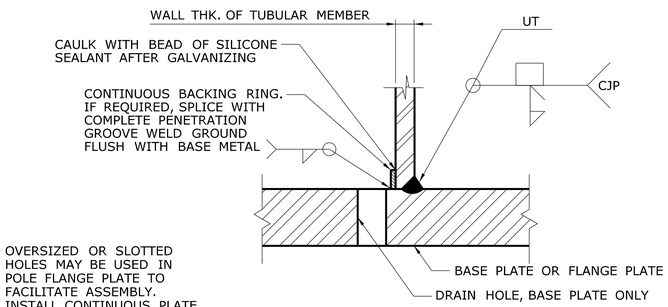

SECTION F
SCALE: 3" = 1'-0"

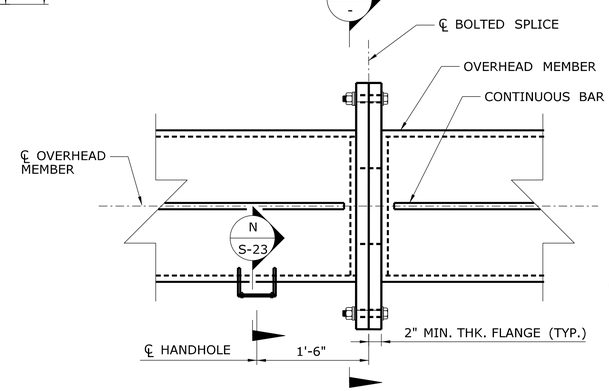

DETAIL C
SCALE: 1" = 1'-0"

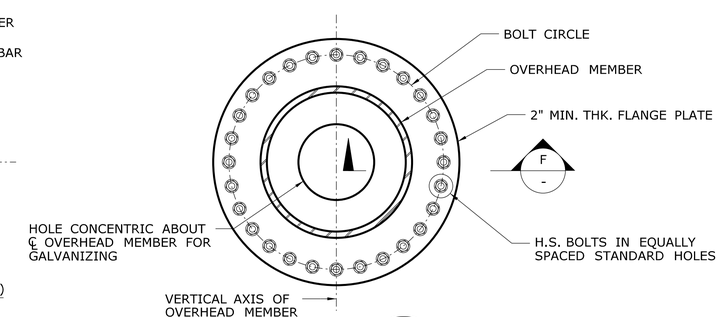

SECTION K
SCALE: 1" = 1'-0"

REV.	DATE	REVISION DESCRIPTION	SHEET NO.

THE INFORMATION, INCLUDING ESTIMATED QUANTITIES OF WORK, SHOWN ON THESE SHEETS IS BASED ON LIMITED INVESTIGATIONS BY THE STATE AND IS IN NO WAY WARRANTED TO INDICATE THE CONDITIONS OF ACTUAL QUANTITIES OF WORK WHICH WILL BE REQUIRED.

Plotted Date: 12/17/2012

DESIGNER/DRAFTER: MDG
CHECKED BY: RDD
SCALE AS NOTED

STATE OF CONNECTICUT
DEPARTMENT OF TRANSPORTATION

Filename: ...\SB_MBS-2_Details_1.dgn

SIGNATURE/BLOCK: OFFICE OF ENGINEERING
APPROVED BY:

PROJECT TITLE: REPLACEMENT OF OVERHEAD SIGN SUPPORTS ON VARIOUS ROUTES STATEWIDE

TOWN: VARIOUS

DRAWING TITLE: MONOTUBE BRIDGE TYPE DETAILS-1

PROJECT NO. 170-3065
DRAWING NO. S-22
SHEET NO. 04.22

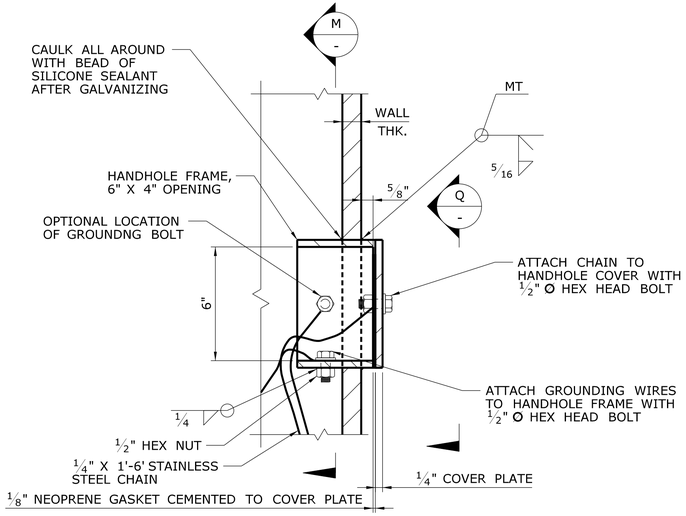

DETAIL L / -
SCALE: 3" = 1'-0"

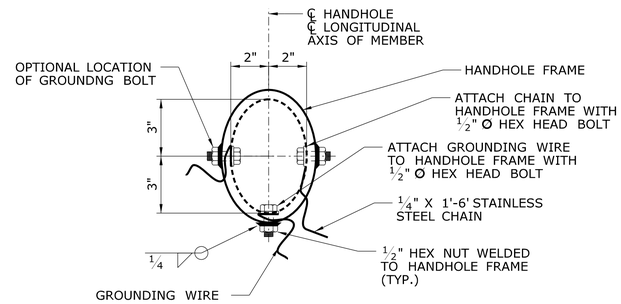

SECTION M / -
SCALE: 3" = 1'-0"

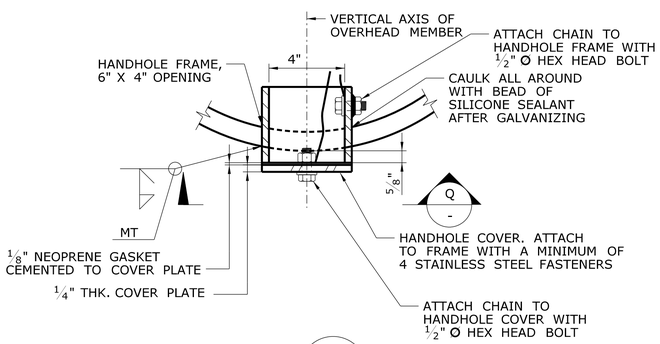

SECTION N / -
SCALE: 3" = 1'-0"

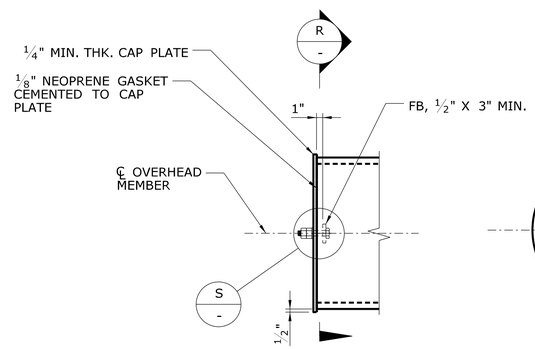

DETAIL P / -
SCALE: 1" = 1'-0"

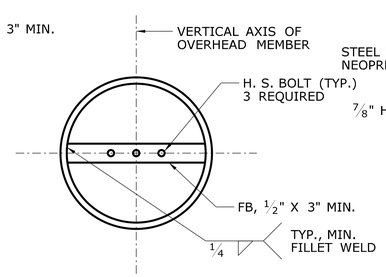

DETAIL R / -
SCALE: 1" = 1'-0"

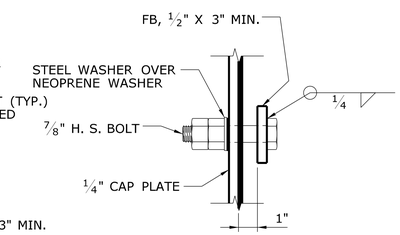

DETAIL S / -
SCALE: 3" = 1'-0"

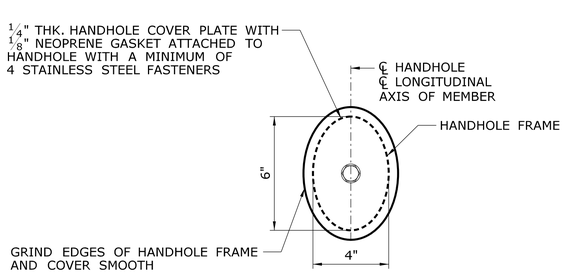

VIEW Q / -
SCALE: 3" = 1'-0"

REV.	DATE	REVISION DESCRIPTION	SHEET NO.

THE INFORMATION, INCLUDING ESTIMATED QUANTITIES OF WORK, SHOWN ON THESE SHEETS IS BASED ON LIMITED INVESTIGATIONS BY THE STATE AND IS IN NO WAY WARRANTED TO INDICATE THE CONDITIONS OF ACTUAL QUANTITIES OF WORK WHICH WILL BE REQUIRED.

Plotted Date: 12/17/2012

DESIGNER/DRAFTER: MDG
CHECKED BY: RDD
SCALE AS NOTED

STATE OF CONNECTICUT
DEPARTMENT OF TRANSPORTATION

Filename: ...\SB_MBS-3_Details_2.dgn

SIGNATURE/ BLOCK:
OFFICE OF ENGINEERING
APPROVED BY:

PROJECT TITLE:
REPLACEMENT OF OVERHEAD SIGN SUPPORTS ON VARIOUS ROUTES STATEWIDE

TOWN: VARIOUS

DRAWING TITLE:
MONOTUBE BRIDGE TYPE DETAILS-2

PROJECT NO. 170-3065
DRAWING NO. S-23
SHEET NO. 04.23

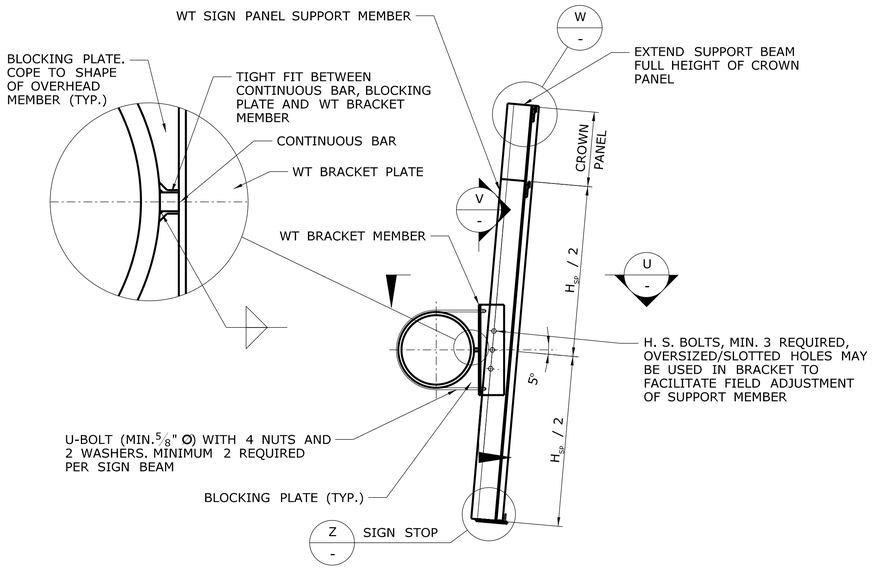

SECTION T
SCALE: 1/2" = 1'-0"

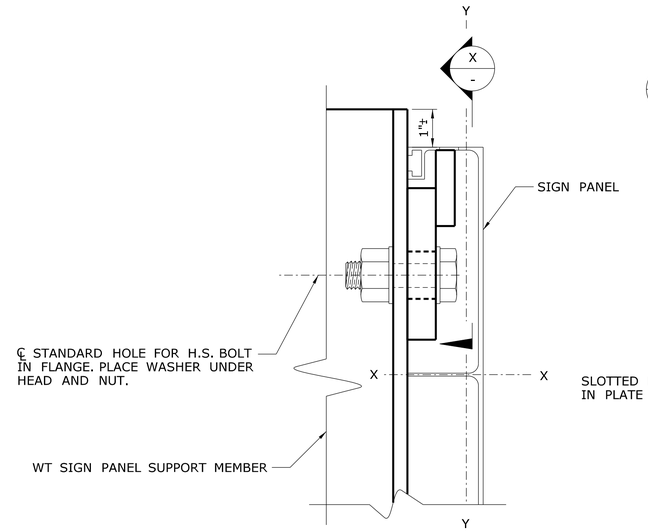

SECTION W
SCALE 6" = 1'-0"

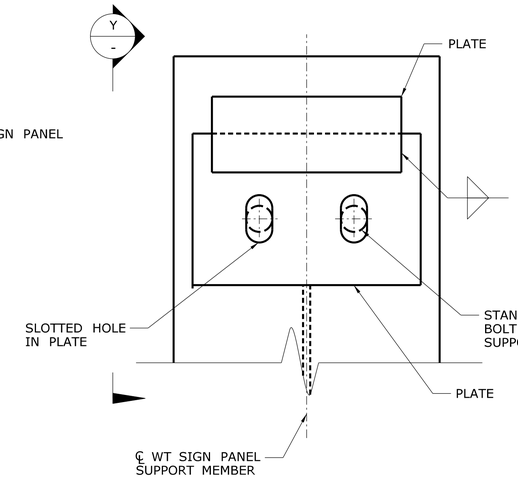

SECTION X
SCALE: 6" = 1'-0"

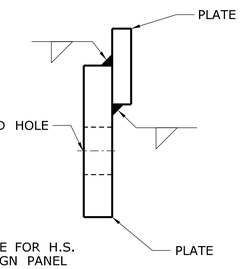

SECTION Y
SCALE: 6" = 1'-0"

TYPICAL SIGN HOOK DETAILS

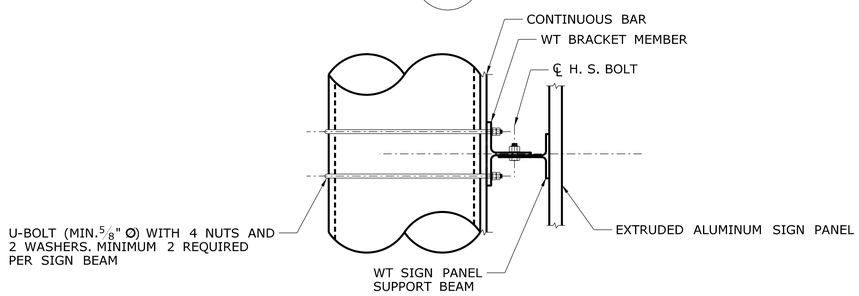

SECTION U
SCALE: 1" = 1'-0"

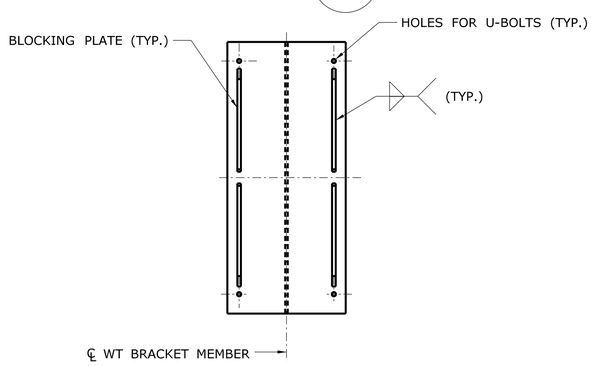

SECTION V
SCALE: 1 1/2" = 1'-0"

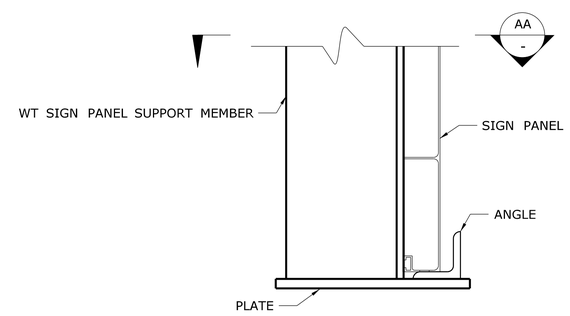

SECTION Z
SCALE: 3" = 1'-0"

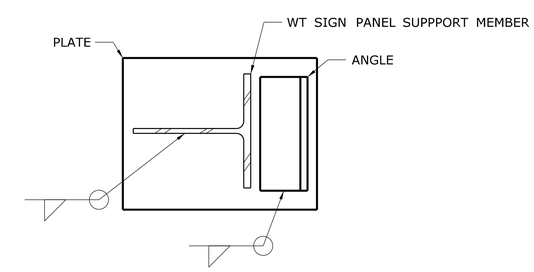

SECTION AA
SCALE: 3" = 1'-0"

TYPICAL SIGN STOP DETAILS

REV.	DATE	REVISION DESCRIPTION	SHEET NO.

THE INFORMATION, INCLUDING ESTIMATED QUANTITIES OF WORK, SHOWN ON THESE SHEETS IS BASED ON LIMITED INVESTIGATIONS BY THE STATE AND IS IN NO WAY WARRANTED TO INDICATE THE CONDITIONS OF ACTUAL QUANTITIES OF WORK WHICH WILL BE REQUIRED.

Plotted Date: 12/17/2012

DESIGNER/DRAFTER: MDG
CHECKED BY: RDD
SCALE AS NOTED

STATE OF CONNECTICUT
DEPARTMENT OF TRANSPORTATION

Filename: ...\SB_MBS-4_Details_3.dgn

SIGNATURE/BLOCK:
OFFICE OF ENGINEERING
APPROVED BY:

PROJECT TITLE:
REPLACEMENT OF OVERHEAD SIGN SUPPORTS ON VARIOUS ROUTES STATEWIDE

TOWN: VARIOUS

DRAWING TITLE: MONOTUBE BRIDGE TYPE DETAILS-3

PROJECT NO. 170-3065
DRAWING NO. S-24
SHEET NO. 04.24

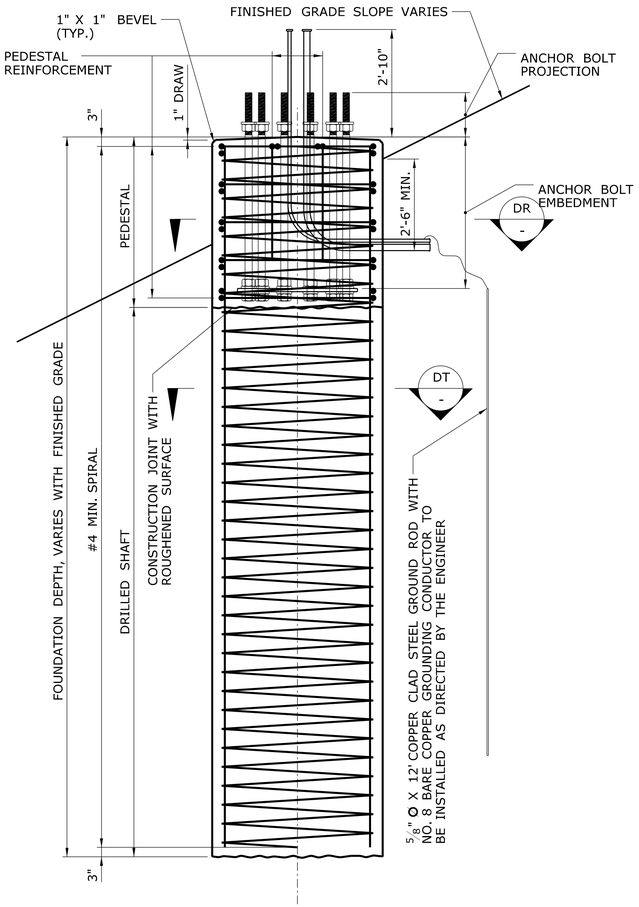

ELEVATION VIEW DS

SCALE: 1/2" = 1'-0"

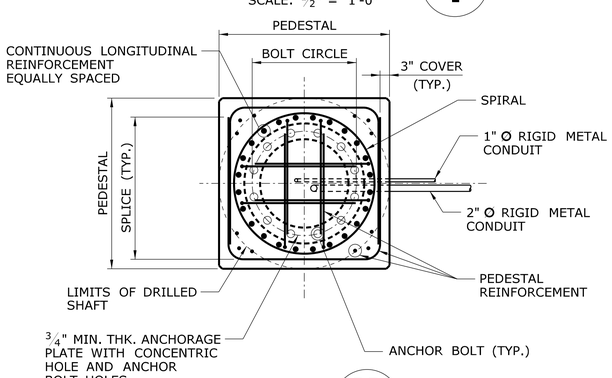

SECTION DR

SCALE: 1/2" = 1'-0"

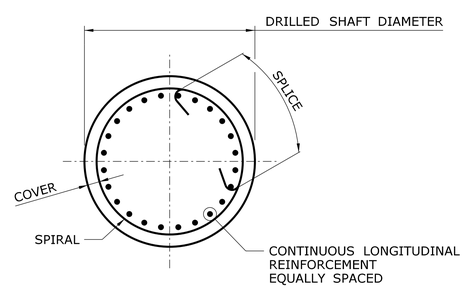

SECTION DT

SCALE: 1/2" = 1'-0"

FOUNDATION NOTES

THE DRILLED SHAFT FOUNDATION SHALL BE DESIGNED, FABRICATED, AND CONSTRUCTED BY THE CONTRACTOR IN ACCORDANCE WITH THE SPECIAL PROVISION "DRILLED SHAFT TRAFFIC STRUCTURE FOUNDATION".

FOR THE DESIGN OF THE DRILLED SHAFT FOUNDATION, THE CONTRACTOR IS RESPONSIBLE TO DETERMINE THE SUBSURFACE CONDITIONS (CHARACTER OF THE SOIL AND ROCK, PRESENCE OF GROUND WATER, ETC.) IN THE LOCATION OF, ADJACENT TO AND BELOW THE SHAFT EXCAVATION. SOIL BORINGS, IF AVAILABLE, ARE INCLUDED WITH THE CONTRACT DOCUMENTS. THE CONTRACTOR MAY OBTAIN SUBSURFACE INFORMATION AT HIS OWN EXPENSE.

THE DESIGN OF THE FOUNDATION SHALL BE COORDINATED WITH THE SIGN SUPPORT AND THE SUPPORT ANCHORAGE TO ENSURE THAT THE FOUNDATION IS ADEQUATE FOR THE SUPPORT REACTIONS AND TO AVOID CONFLICTS BETWEEN THE EMBEDDED SUPPORT ANCHORAGE AND THE FOUNDATION REINFORCEMENT.

THE SIGN SUPPORT SHALL NOT BE INSTALLED UNTIL BOTH THE PEDESTAL CONCRETE AND SHAFT CONCRETE HAVE REACHED THE DESIGN COMPRESSIVE STRENGTH, f'_c, OF 4,000 PSI AT 28 DAYS.

ADDITIONAL RIGID METAL CONDUITS SHALL BE PROVIDED AS DIRECTED BY THE ENGINEER.

ALL EMPTY RIGID METAL CONDUITS SHALL BE CAPPED.

THE RIGID METAL CONDUIT SWEEPS SHALL EXTEND A MINIMUM 2'-0" FROM THE SIDE OF THE FOUNDATION.

THE NO. 8 AWG BARE COPPER CONDUCTOR SHALL BE CONNECTED TO THE EXTERNAL GROUND ROD USING A GROUNDING CLAMP APPROVED FOR DIRECT BURIAL.

THE COST OF FOUNDATION EXCAVATION, REINFORCEMENT AND CONCRETE, INCLUDING THE DESIGN AND FABRICATION, SHALL BE PAID FOR UNDER THE ITEM "DRILLED SHAFT TRAFFIC STRUCTURE FOUNDATION".

REV.	DATE	REVISION DESCRIPTION	SHEET NO.

THE INFORMATION, INCLUDING ESTIMATED QUANTITIES OF WORK, SHOWN ON THESE SHEETS IS BASED ON LIMITED INVESTIGATIONS BY THE STATE AND IS IN NO WAY WARRANTED TO INDICATE THE CONDITIONS OF ACTUAL QUANTITIES OF WORK WHICH WILL BE REQUIRED.

Plotted Date: 12/17/2012

DESIGNER/DRAFTER: MDG

CHECKED BY: RDD

SCALE AS NOTED

STATE OF CONNECTICUT
DEPARTMENT OF TRANSPORTATION

Filename: ...\SB_DSF-1_Fnd.dgn

SIGNATURE/BLOCK: OFFICE OF ENGINEERING

APPROVED BY:

PROJECT TITLE: REPLACEMENT OF OVERHEAD SIGN SUPPORTS ON VARIOUS ROUTES STATEWIDE

TOWN: VARIOUS

DRAWING TITLE: DRILLED SHAFT DETAILS

PROJECT NO. 170-3065

DRAWING NO. S-25

SHEET NO. 04.25

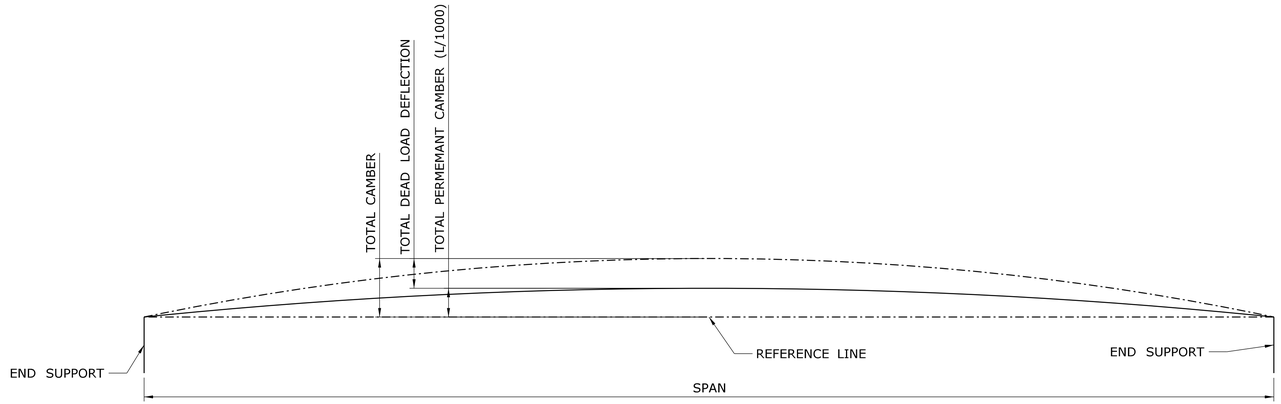

CAMBER DIAGRAM

SCALE: NTS

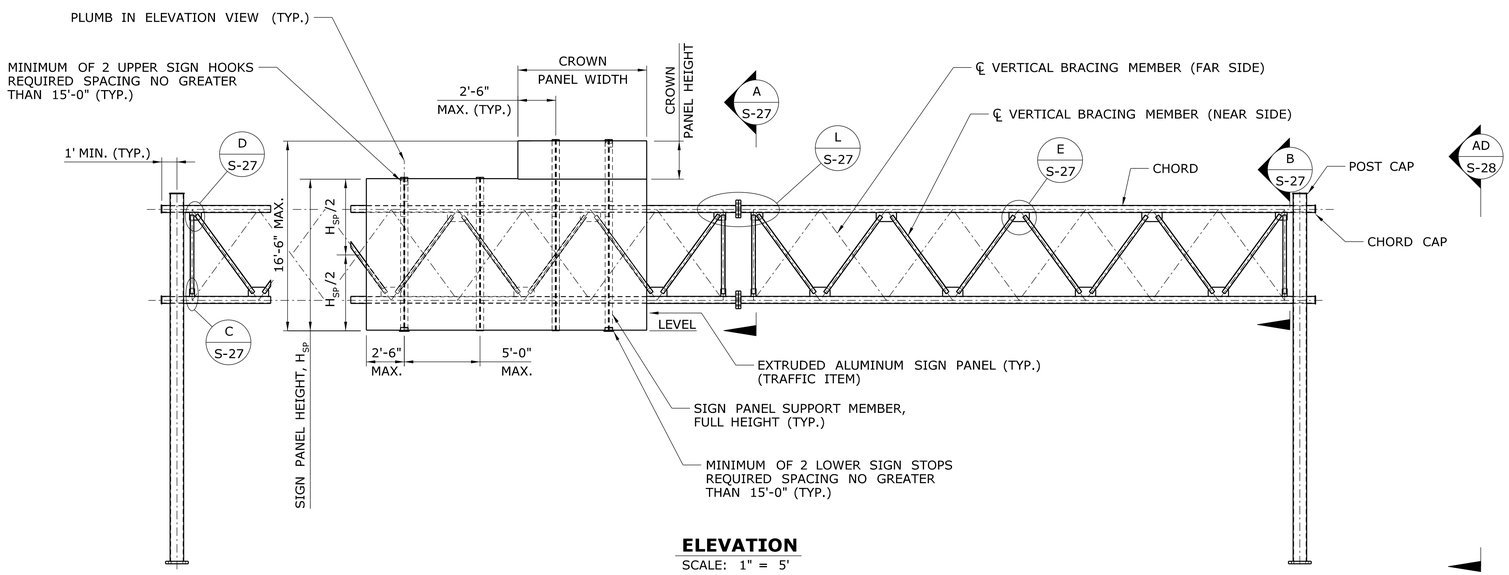

ELEVATION

SCALE: 1" = 5'

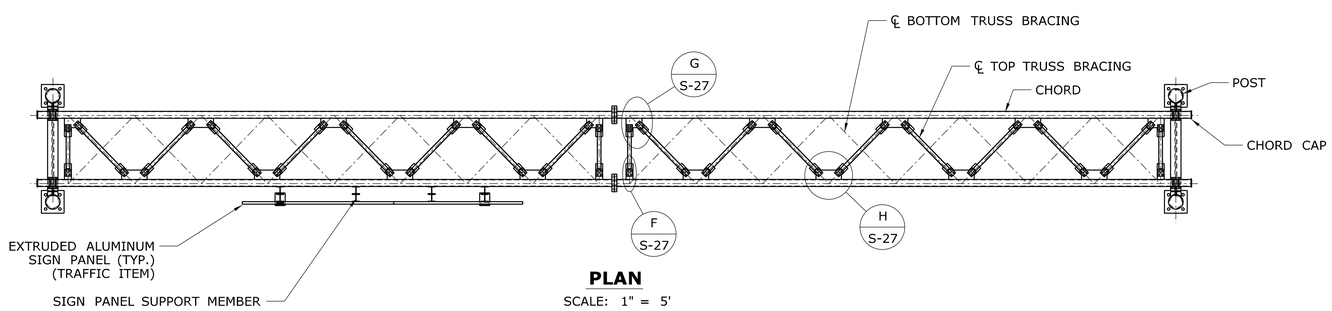

PLAN

SCALE: 1" = 5'

NOTES

THE 4 CHORD TRUSS BRIDGE SIGN STRUCTURE, INCLUDING THE ANCHORAGE TO THE FOUNDATIONS AND THE HARDWARE AND STRUCTURAL MEMBERS REQUIRED TO SUPPORT THE TRAFFIC APPURTENANCES, SHALL BE DESIGNED, FABRICATED, ERECTED, ASSEMBLED AND INSTALLED BY THE CONTRACTOR IN ACCORDANCE WITH THE SPECIAL PROVISION "4 CHORD TRUSS BRIDGE SIGN STRUCTURE".

THE 4 CHORD TRUSS BRIDGE SIGN STRUCTURE SHALL BE COMPOSED OF A 4 CHORD TRUSS HORIZONTAL OVERHEAD SPAN MEMBER SUPPORTED ON A TOWER ASSEMBLY MADE UP OF 2 POSTS WITH BRACING MEMBERS.

THE DETAILS PRESENTED AND REFERRED TO ON THIS SHEET REPRESENT CONCEPTUAL DETAILS OF A SIGN SUPPORT CONSISTENT WITH THE REQUIREMENTS IN THE SPECIFICATIONS. THE CONTRACTOR IS RESPONSIBLE FOR DETERMINING ALL DETAILS AND DIMENSIONS.

THE APPROXIMATE DIMENSIONS OF THE HORIZONTAL TRUSS AND THE TOWER HEIGHTS ARE SHOWN IN PLAN AND ELEVATION ON THE TRAFFIC SHEETS. THE ACTUAL SIGN SUPPORT DIMENSIONS SHALL BE DETERMINED BY THE CONTRACTOR BASED ON A THE HORIZONTAL AND VERTICAL CLEARANCES SHOWN ON THE TRAFFIC SHEETS, A FIELD SURVEY OF THE FINISHED GRADE AT THE SITE, THE ELEVATION OF THE TOP OF THE FINISHED FOUNDATION, THE LOCATIONS OF OVERHEAD AND SUBSURFACE UTILITIES, THE LOCATION OF THE DRAINAGE FACILITIES AND NOISE BARRIER WALL LOCATIONS.

THE SIGN PANELS, INCLUDING CROWN PANELS AS APPLICABLE, SHALL BE LOCATED ON THE HORIZONTAL TRUSS BASED ON THE DIMENSIONS SHOWN ON THE TRAFFIC SHEETS AND THE ACTUAL SIGN SUPPORT DIMENSIONS. THE SIGN PANELS SHALL BE INSTALLED SYMMETRICALLY ABOUT THE CENTERLINE OF THE TRUSS. THE NUMBER AND SPACING OF PANEL SUPPORT MEMBERS SHALL BE DETERMINED BY THE CONTRACTOR BASED ON THE WIDTH OF THE SIGN AND CROWN PANELS AND THE SUPPORT MEMBER SPACING PARAMETERS. SIGN PANELS SHALL BE SUPPORTED BY NO LESS THAN 3 SUPPORT MEMBERS. CROWN PANELS SHALL BE SUPPORTED BY NO LESS THAN 2 SUPPORT MEMBERS.

THE CONTRACTOR SHALL BE RESPONSIBLE FOR THE PROPER FIT OF THE SIGN SUPPORT STRUCTURES ON THE CONSTRUCTED FOUNDATIONS. PRIOR TO FABRICATION, THE CONTRACTOR SHALL TAKE FIELD MEASUREMENTS TO VERIFY ALL SIGN SUPPORT DIMENSIONS DEPENDANT UPON THE CONSTRUCTED FOUNDATIONS. THE OVERHEAD MEMBER SHALL BE TEMPORARILY SUPPORTED, IN ORDER TO BRING ALL PLATES OF THE CONNECTIONS INTO FIRM CONTACT, WHILE THE HIGH STRENGTH BOLTS ARE INSTALLED AND TENSIONED. THE CONTRACTOR SHALL TAKE THE PROPER PRECAUTIONS TO ENSURE THE STABILITY OF ALL STRUCTURAL ELEMENTS UNTIL THE TOTAL STRUCTURE IS ERECTED.

THE COST OF THE TUBULAR STEEL MEMBERS, STRUCTURAL STEEL ROLLED SHAPES, PLATES AND BARS, HIGH-STRENGTH BOLTS AND ANCHORAGE MATERIALS, INCLUDING THE DESIGN, FABRICATION, COATING AND ERECTION, SHALL BE PAID FOR UNDER THE ITEM "4 CHORD TRUSS BRIDGE SIGN STRUCTURE". THE COST OF FOUNDATION EXCAVATION, REINFORCEMENT AND CONCRETE, INCLUDING THE DESIGN AND FABRICATION, SHALL BE PAID FOR UNDER THE ITEM "OVERHEAD TRUSS SIGN SUPPORT FOUNDATION".

REV.	DATE	REVISION DESCRIPTION	SHEET NO.

THE INFORMATION, INCLUDING ESTIMATED QUANTITIES OF WORK, SHOWN ON THESE SHEETS IS BASED ON LIMITED INVESTIGATIONS BY THE STATE AND IS IN NO WAY WARRANTED TO INDICATE THE CONDITIONS OF ACTUAL QUANTITIES OF WORK WHICH WILL BE REQUIRED.

Plotted Date: 12/17/2012

DESIGNER/DRAFTER: MDG
CHECKED BY: RDD
SCALE AS NOTED

STATE OF CONNECTICUT
DEPARTMENT OF TRANSPORTATION

Filename: ...\SB_QCT-General_Plan.dgn

SIGNATURE/BLOCK: OFFICE OF ENGINEERING
APPROVED BY:

PROJECT TITLE: REPLACEMENT OF OVERHEAD SIGN SUPPORTS ON VARIOUS ROUTES STATEWIDE

TOWN: VARIOUS

DRAWING TITLE: 4 CHORD TRUSS BRIDGE GENERAL PLAN

PROJECT NO. 170-3065
DRAWING NO. S-26
SHEET NO. 04.26

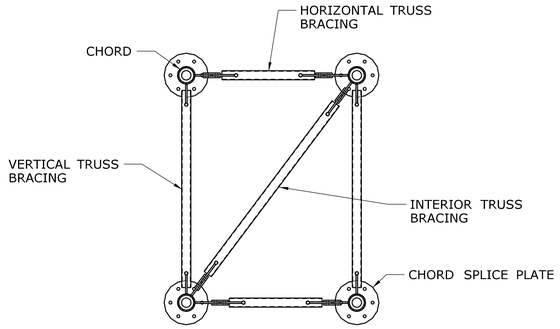

SECTION - TRUSS BOX CONNECTION (A / -)

SCALE: 1½" = 1'-0"

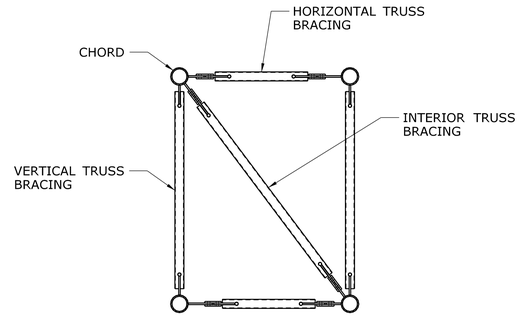

VIEW END BOX TRUSS (B / -)

SCALE: 1½" = 1'-0"

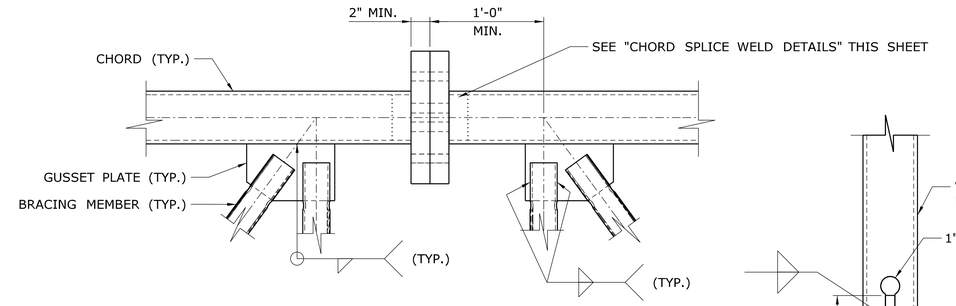

DETAIL (L / -)

SCALE: 1½" = 1'-0"

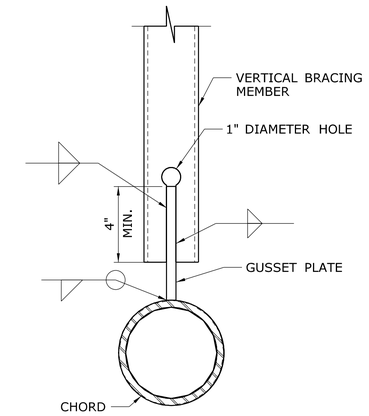

SECTION (J / -)

SCALE: 1½" = 1'-0"

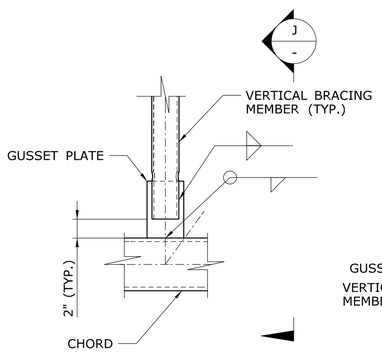

DETAIL (C / -)

SCALE: 1½" = 1'-0"

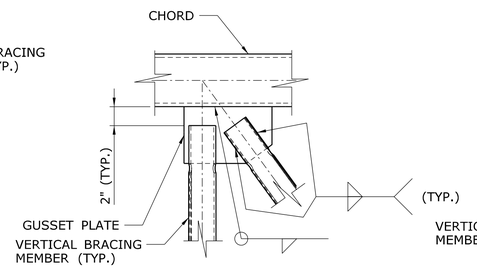

DETAIL (D / -)

SCALE: 1½" = 1'-0"

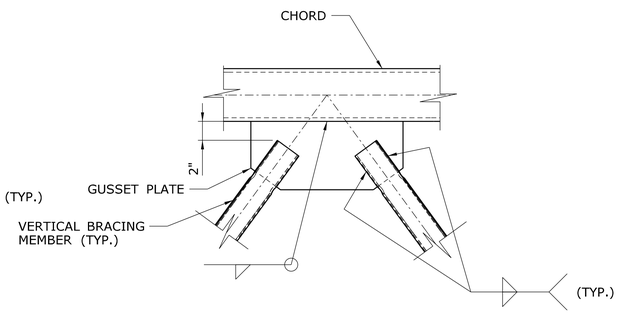

DETAIL (E / -)

SCALE: 1½" = 1'-0"

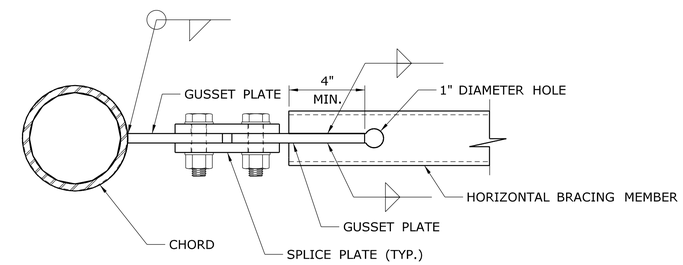

SECTION (K / -)

SCALE: 1½" = 1'-0"

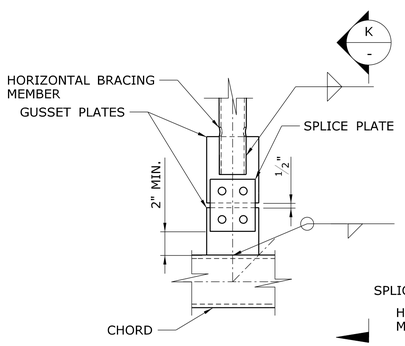

DETAIL (F / -)

SCALE: 1½" = 1'-0"

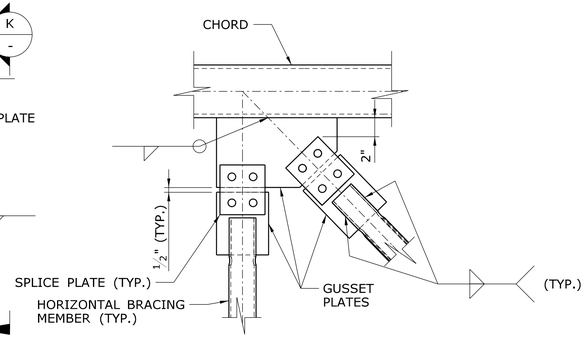

DETAIL (G / -)

SCALE: 1½" = 1'-0"

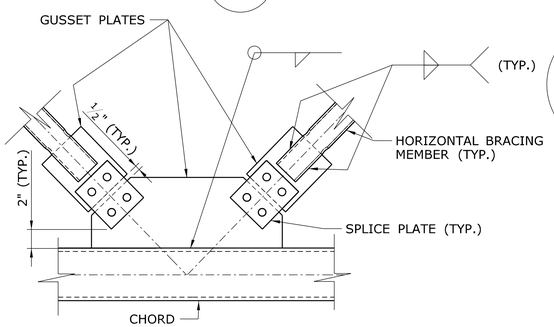

DETAIL (H / -)

SCALE: 1½" = 1'-0"

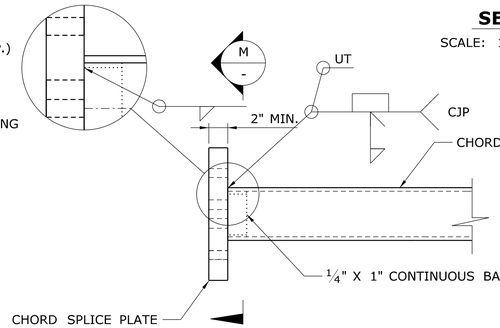

CHORD SPLICE WELD DETAILS

SCALE: 1½" = 1'-0"

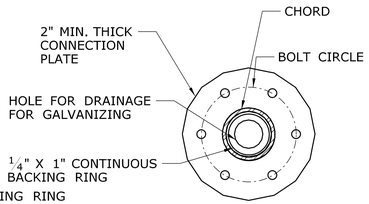

SECTION (M / -)

SCALE: 1½" = 1'-0"

REV.	DATE	REVISION DESCRIPTION	SHEET NO.

THE INFORMATION, INCLUDING ESTIMATED QUANTITIES OF WORK, SHOWN ON THESE SHEETS IS BASED ON LIMITED INVESTIGATIONS BY THE STATE AND IS IN NO WAY WARRANTED TO INDICATE THE CONDITIONS OF ACTUAL QUANTITIES OF WORK WHICH WILL BE REQUIRED.

Plotted Date: 12/17/2012

DESIGNER/DRAFTER: MDG

CHECKED BY: RDD

SCALE AS NOTED

STATE OF CONNECTICUT
DEPARTMENT OF TRANSPORTATION

Filename: ...\SB_QCT-Details_1.dgn

SIGNATURE/BLOCK: OFFICE OF ENGINEERING

APPROVED BY:

PROJECT TITLE: REPLACEMENT OF OVERHEAD SIGN SUPPORTS ON VARIOUS ROUTES STATEWIDE

TOWN: VARIOUS

DRAWING TITLE: 4 CHORD TRUSS BRIDGE DETAILS-1

PROJECT NO. 170-3065

DRAWING NO. S-27

SHEET NO. 04.27

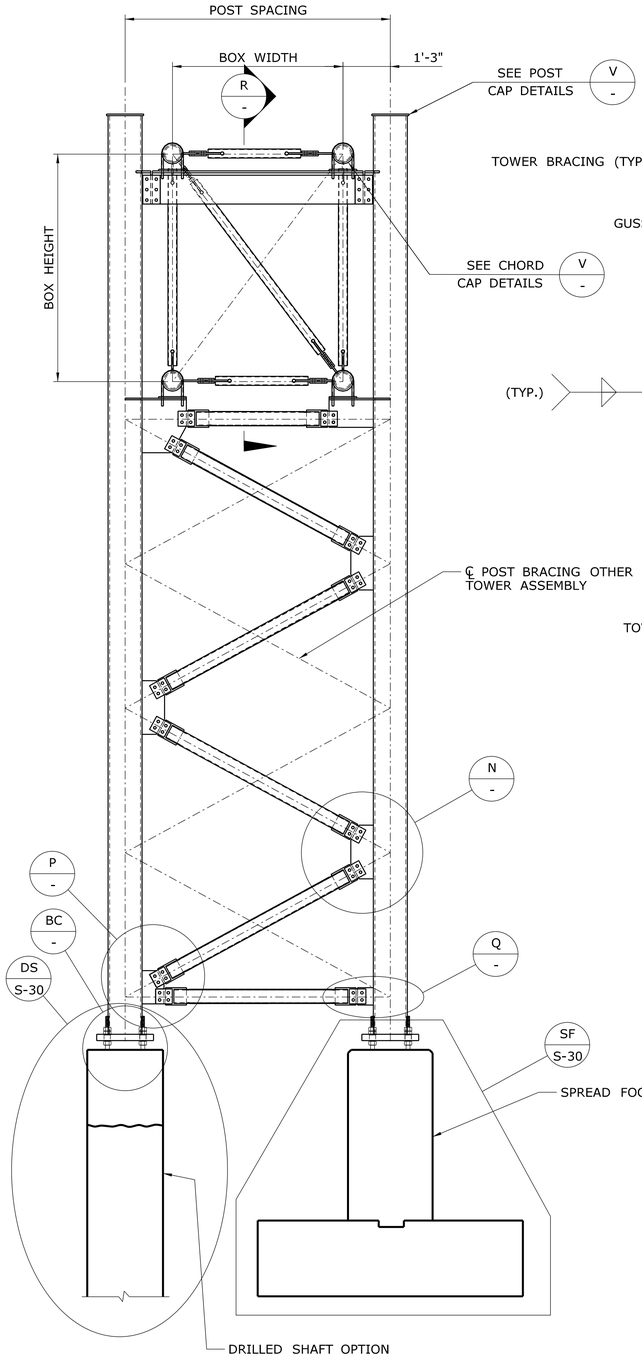

VIEW - TOWER ASSEMBLY AD -

SCALE: ½" = 1'-0"

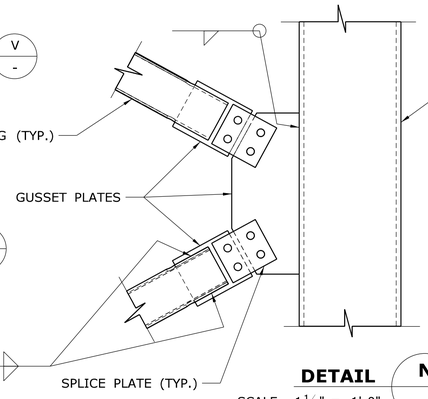

DETAIL N -

SCALE: 1½" = 1'-0"

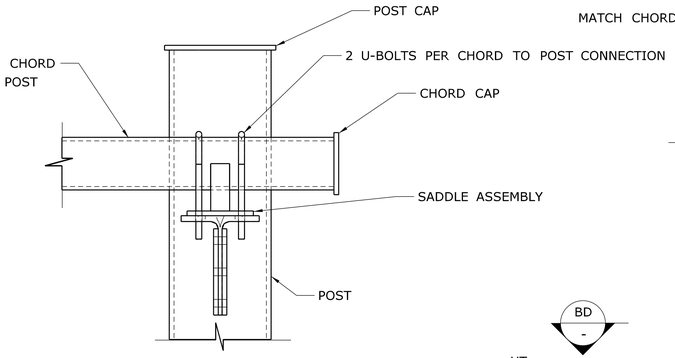

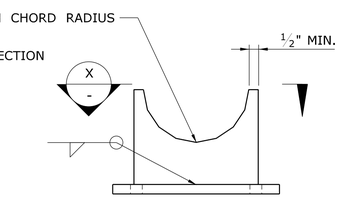

SADDLE ASSEMBLY

SCALE: 3" = 1'-0"

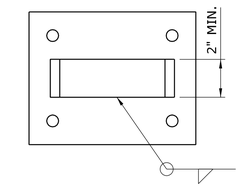

VIEW X -

SCALE: 3" = 1'-0"

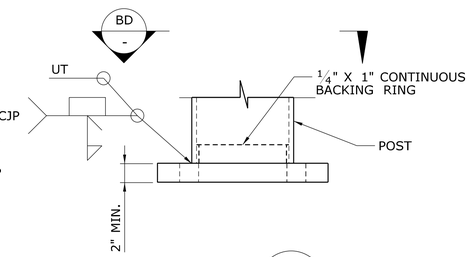

DETAIL BC -

SCALE: 1½" = 1'-0"

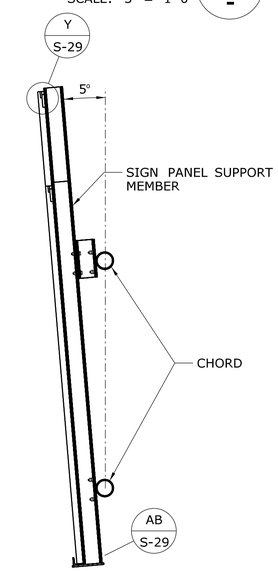

SIGN PANEL SUPPORT MEMBER

SCALE: ½" = 1'-0"

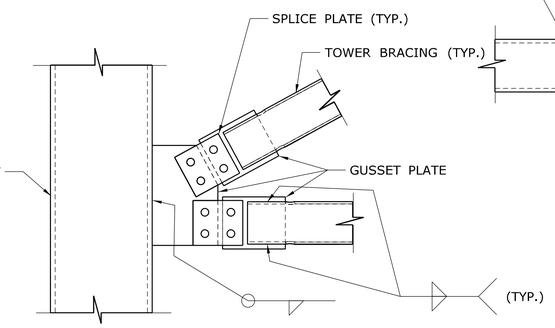

DETAIL P -

SCALE: 1½" = 1'-0"

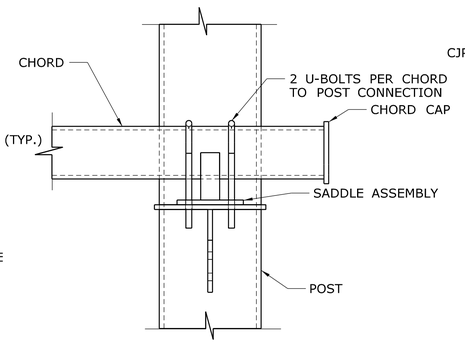

DETAIL R -

SCALE: 1½" = 1'-0"

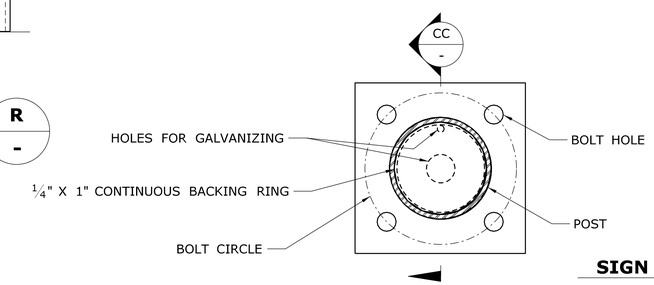

SECTION BD -

SCALE: 1½" = 1'-0"

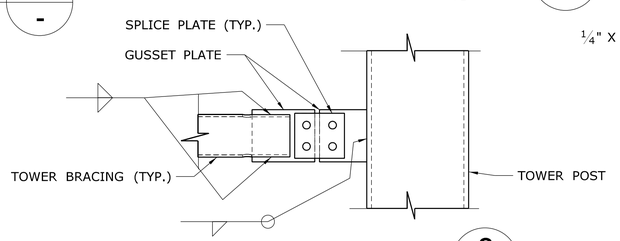

DETAIL Q -

SCALE: 1½" = 1'-0"

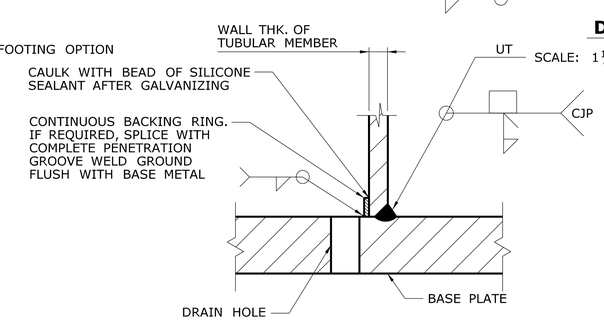

SECTION CC -

SCALE: NTS

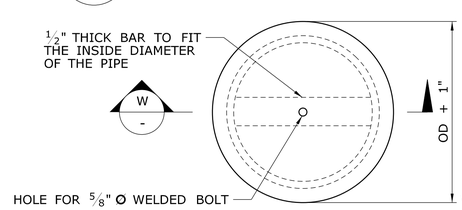

CHORD AND POST CAP DETAILS V -

SCALE: NTS

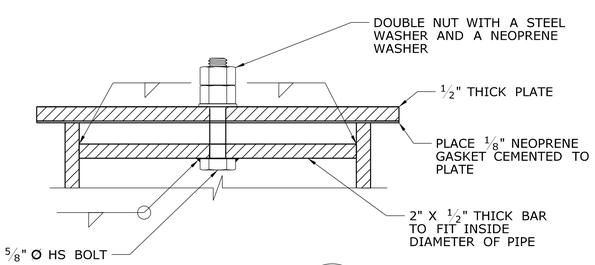

CAP SECTION W -

SCALE: NTS

REV.	DATE	REVISION DESCRIPTION	SHEET NO.

THE INFORMATION, INCLUDING ESTIMATED QUANTITIES OF WORK, SHOWN ON THESE SHEETS IS BASED ON LIMITED INVESTIGATIONS BY THE STATE AND IS IN NO WAY WARRANTED TO INDICATE THE CONDITIONS OF ACTUAL QUANTITIES OF WORK WHICH WILL BE REQUIRED.

Plotted Date: 12/17/2012

DESIGNER/DRAFTER: MDG

CHECKED BY: RDD

SCALE AS NOTED

STATE OF CONNECTICUT
DEPARTMENT OF TRANSPORTATION

Filename: ...\SB_QCT-Details_2.dgn

SIGNATURE/BLOCK: OFFICE OF ENGINEERING

APPROVED BY:

PROJECT TITLE: REPLACEMENT OF OVERHEAD SIGN SUPPORTS ON VARIOUS ROUTES STATEWIDE

TOWN: VARIOUS

DRAWING TITLE: 4 CHORD TRUSS BRIDGE DETAILS-2

PROJECT NO. 170-3065

DRAWING NO. S-28

SHEET NO. 04.28

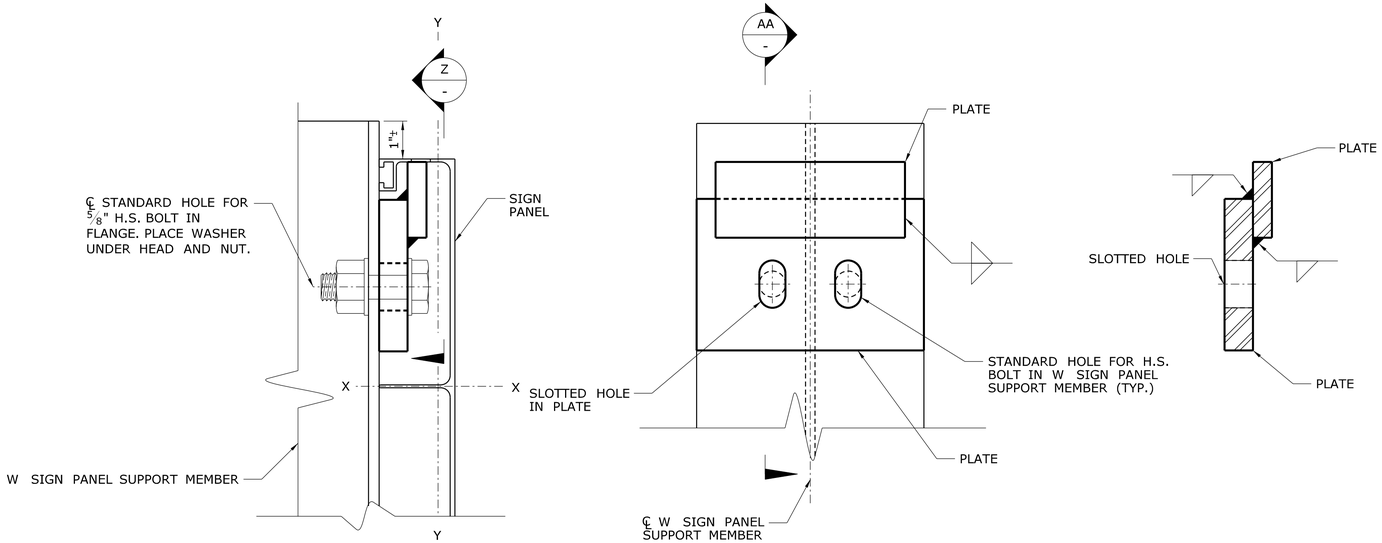

SIGN PANEL HOOK (Y / -)
SCALE: 6" = 1'-0"

SECTION (Z / -)
SCALE: 6" = 1'-0"

SECTION (AA / -)
SCALE: 6" = 1'-0"

TYPICAL SIGN HOOK DETAILS

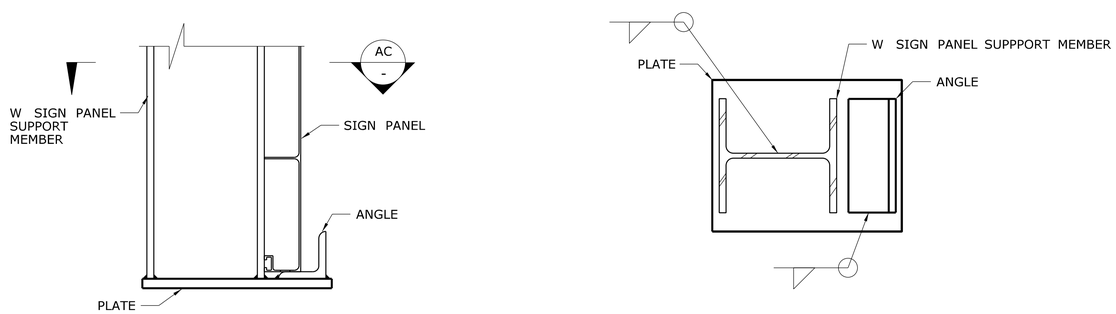

DETAIL (AB / -)
SCALE: 3" = 1'-0"

SECTION (AC / -)
SCALE: 3" = 1'-0"

TYPICAL SIGN STOP DETAILS

REV.	DATE	REVISION DESCRIPTION	SHEET NO.

THE INFORMATION, INCLUDING ESTIMATED QUANTITIES OF WORK, SHOWN ON THESE SHEETS IS BASED ON LIMITED INVESTIGATIONS BY THE STATE AND IS IN NO WAY WARRANTED TO INDICATE THE CONDITIONS OF ACTUAL QUANTITIES OF WORK WHICH WILL BE REQUIRED.

Plotted Date: 12/17/2012

DESIGNER/DRAFTER: MDG
CHECKED BY: RDD
SCALE AS NOTED

STATE OF CONNECTICUT
DEPARTMENT OF TRANSPORTATION

Filename: ...\SB_QCT-Details_3.dgn

SIGNATURE/BLOCK:
OFFICE OF ENGINEERING
APPROVED BY:

PROJECT TITLE:
REPLACEMENT OF OVERHEAD SIGN SUPPORTS ON VARIOUS ROUTES STATEWIDE

TOWN: VARIOUS

DRAWING TITLE: 4 CHORD TRUSS BRIDGE DETAILS-3

PROJECT NO. 170-3065
DRAWING NO. S-29
SHEET NO. 04.29

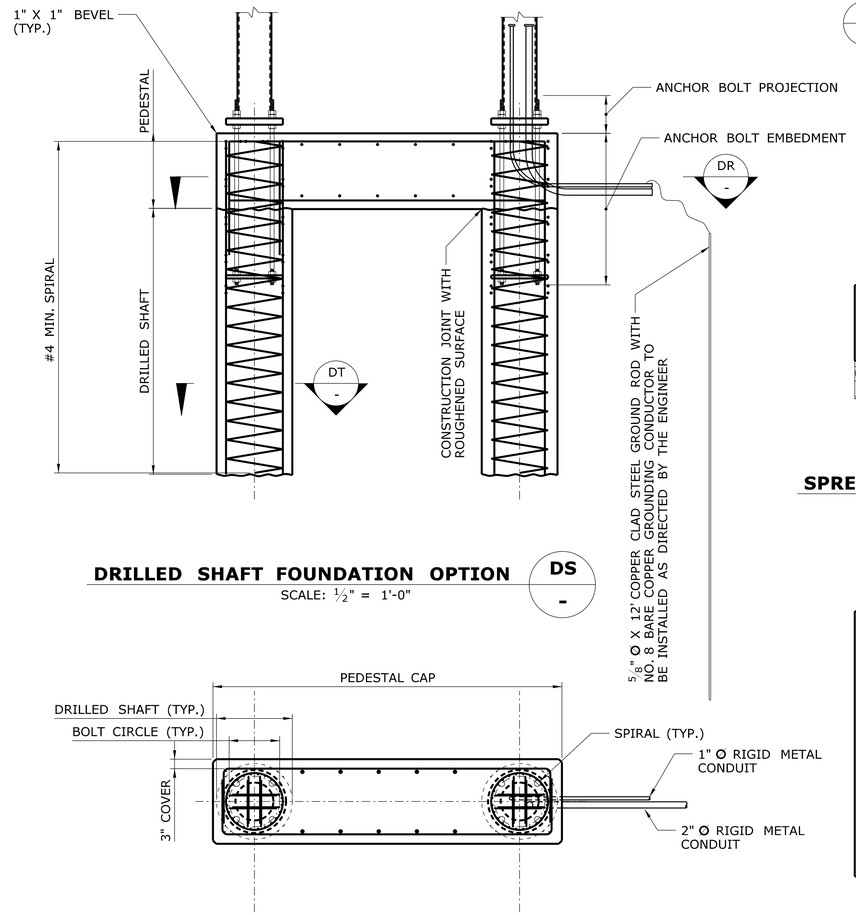

DRILLED SHAFT FOUNDATION OPTION DS -

SCALE: ½" = 1'-0"

SECTION DR -

SCALE: ½" = 1'-0"

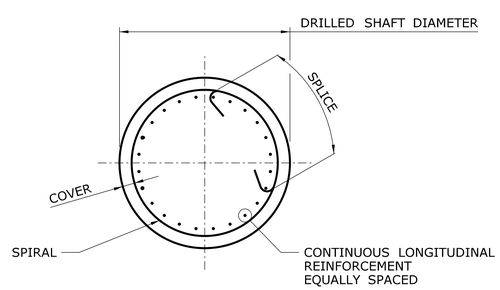

SECTION DT -

SCALE: ½" = 1'-0"

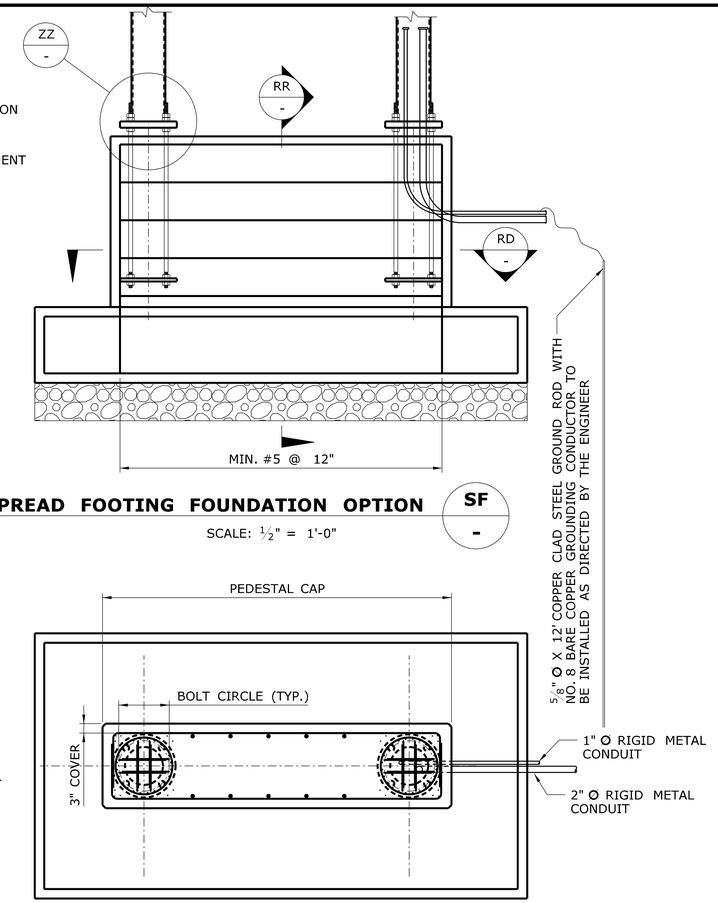

SPREAD FOOTING FOUNDATION OPTION SF -

SCALE: ½" = 1'-0"

SECTION RD -

SCALE: ½" = 1'-0"

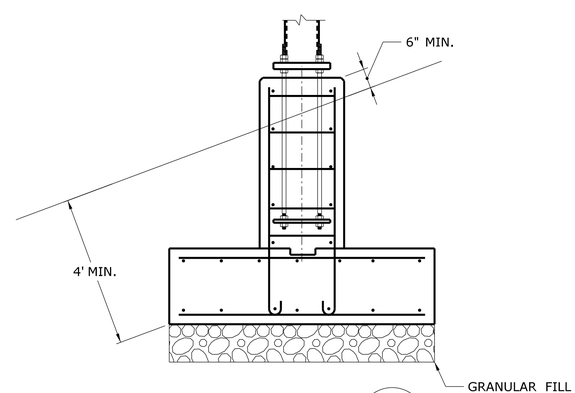

SECTION RR -

SCALE: ½" = 1'-0"

FOUNDATION NOTES

THE FOUNDATION FOR THE OVERHEAD TRUSS SIGN SUPPORT SHALL BE DESIGNED, FABRICATED, AND CONSTRUCTED BY THE CONTRACTOR IN ACCORDANCE WITH THE SPECIAL PROVISION "OVERHEAD TRUSS SIGN SUPPORT FOUNDATION". UNDER THIS ITEM THE CONTRACTOR HAS THE OPTION OF CONSTRUCTING A SPREAD FOOTING OR A DRILLED SHAFT AS THE FOUNDATION UNIT.

FOR THE DESIGN OF THE SPREAD FOOTING OR DRILLED SHAFT FOUNDATIONS, THE CONTRACTOR IS RESPONSIBLE FOR DETERMINING THE SUBSURFACE CONDITIONS (CHARACTER OF THE SOIL AND ROCK, PRESENCE OF GROUND WATER, ETC.) IN THE LOCATION OF, ADJACENT TO AND BELOW THE FOUNDATIONS. SOIL BORINGS, IF AVAILABLE, ARE INCLUDED WITH THE CONTRACT DOCUMENTS. THE CONTRACTOR MAY OBTAIN SUBSURFACE INFORMATION AT HIS OWN EXPENSE.

THE DESIGN OF THE FOUNDATION SHALL BE COORDINATED WITH THE SIGN SUPPORT AND THE SUPPORT ANCHORAGE TO ENSURE THAT THE FOUNDATION IS ADEQUATE FOR THE SUPPORT REACTIONS AND TO AVOID CONFLICTS BETWEEN THE EMBEDDED SUPPORT ANCHORAGE AND THE FOUNDATION REINFORCEMENT.

THE SIGN SUPPORT SHALL NOT BE INSTALLED UNTIL ALL CONCRETE HAS REACHED THE DESIGN COMPRESSIVE STRENGTH, f'_c, OF 4,000 PSI AT 28 DAYS.

ADDITIONAL RIGID METAL CONDUITS SHALL BE PROVIDED AS DIRECTED BY THE ENGINEER.

ALL EMPTY RIGID METAL CONDUITS SHALL BE CAPPED.

THE RIGID METAL CONDUIT SWEEPS SHALL EXTEND A MINIMUM 2'-0" FROM THE SIDE OF THE FOUNDATION.

THE NO. 8 AWG BARE COPPER CONDUCTOR SHALL BE CONNECTED TO THE EXTERNAL GROUND ROD USING A GROUNDING CLAMP APPROVED FOR DIRECT BURIAL.

THE COST OF FOUNDATION EXCAVATION, REINFORCEMENT AND CONCRETE, INCLUDING THE DESIGN AND FABRICATION, AND INCIDENTAL CONSTRUCTION SHALL BE PAID FOR UNDER THE ITEM "OVERHEAD TRUSS SIGN SUPPORT FOUNDATION".

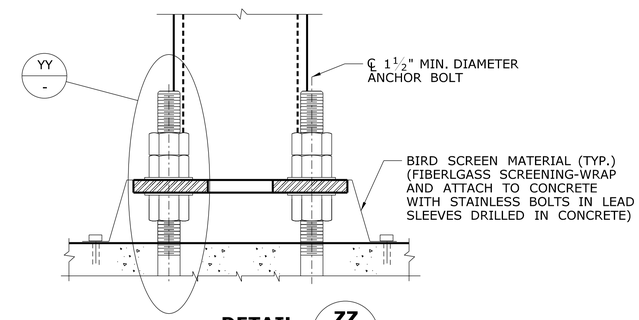

DETAIL ZZ -

SCALE: NTS

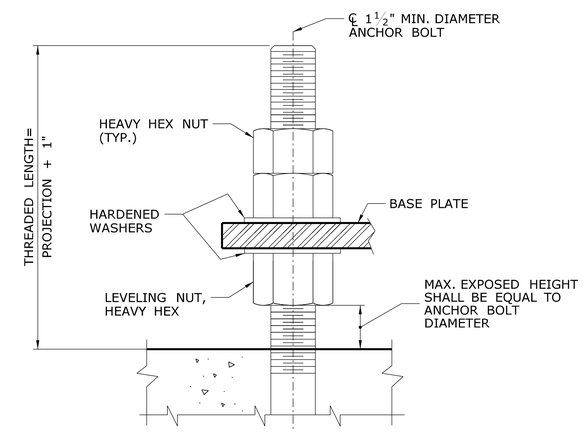

DETAIL YY -

SCALE: NTS

REV.	DATE	REVISION DESCRIPTION	SHEET NO.

THE INFORMATION, INCLUDING ESTIMATED QUANTITIES OF WORK, SHOWN ON THESE SHEETS IS BASED ON LIMITED INVESTIGATIONS BY THE STATE AND IS IN NO WAY WARRANTED TO INDICATE THE CONDITIONS OF ACTUAL QUANTITIES OF WORK WHICH WILL BE REQUIRED.

Plotted Date: 12/17/2012

DESIGNER/DRAFTER: MDG

CHECKED BY: RDD

SCALE AS NOTED

STATE OF CONNECTICUT
DEPARTMENT OF TRANSPORTATION

Filename: ...\SB_QCT_Foundation.dgn

SIGNATURE/ BLOCK:

OFFICE OF ENGINEERING

APPROVED BY:

PROJECT TITLE:

REPLACEMENT OF OVERHEAD SIGN SUPPORTS ON VARIOUS ROUTES STATEWIDE

TOWN: **VARIOUS**

DRAWING TITLE: **TRUSS BRIDGE STRUCTURE FOUNDATION**

PROJECT NO. 170-3065

DRAWING NO. S-30

SHEET NO. 04.30

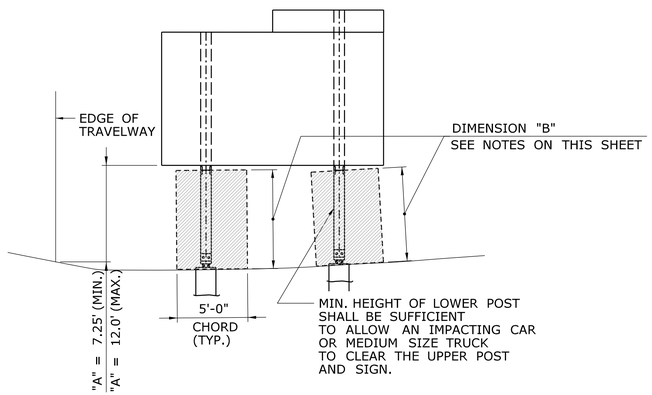

LEVEL TO SHALLOW SLOPES

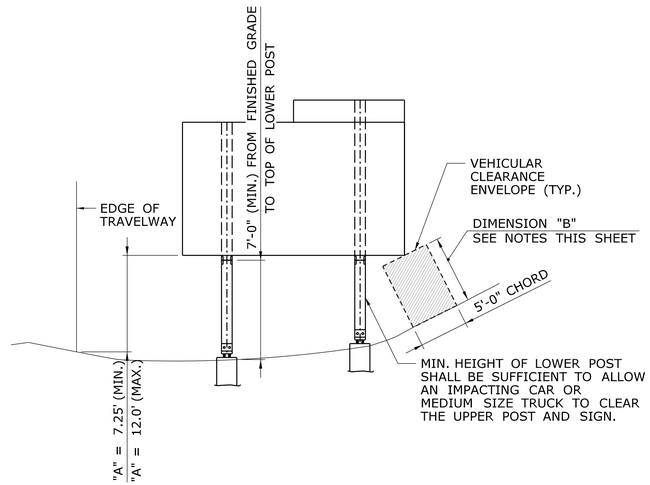

STEEPER SLOPES

SIGN LOCATION - CUT

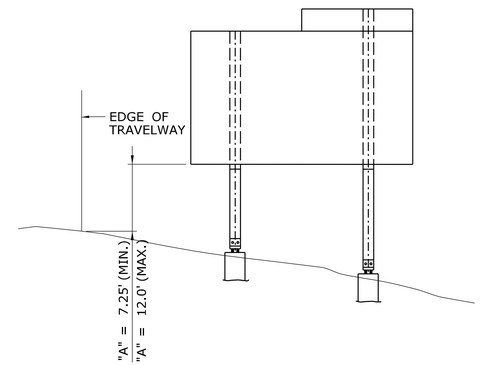

SIGN LOCATION - FILL

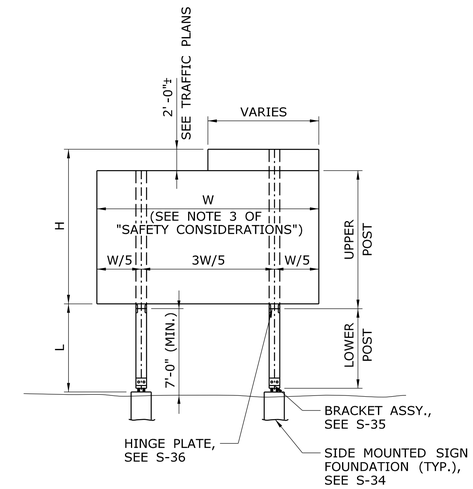

TYPICAL POST MOUNTED SIGN

NOTES FOR DETERMINING DIMENSION "B"

1. DIMENSION "B" IS THE SMALLER OF:
   A. THE CLEAR DISTANCE BETWEEN THE BOTTOM OF SIGN AND THE FINISHED GRADE.
   B. THE CLEAR DISTANCE BETWEEN THE BOTTOM OF UPPER POST AND THE FINISHED GRADE.
2. DIMENSION "B" SHALL TYPICALLY BE A MINIMUM OF 7'-0" TO CLEAR AN IMPACTING CAR OR MEDIUM SIZE TRUCK.
3. WHEN DIMENSION "A" WOULD EXCEED 12'-0", CONSIDERATION MAY BE GIVEN TO REDUCING DIMENSION "B" IN ACCORDANCE WITH PROVISIONS OF NOTE 3.
4. DIMENSION "B" MAY BE LESS THAN 7'-0":
   A. IF THE POST IS OUT OF THE CLEAR ZONE.
   B. IF THE POST IS WITHIN THE CLEAR ZONE BUT SHIELDED BY AN APPROPRIATE BARRIER SYSTEM.
   C. IN NO CASE SHALL DIMENSION "B" BE LESS THAN 2'-6".
5. IF FIELD CONDITIONS EXCEED THESE REQUIREMENTS, CONTACT THE ENGINEER FOR DIRECTION.

NOTES ON TOTAL HEIGHT OF SIGN POSTS

1. UPPER SIGN POSTS SHALL EXTEND TO THE TOP OF FULL WIDTH SIGN PANEL OR THE TOP OF CROWN, WHICHEVER IS HIGHER.
2. FOR SIGN OR CROWN PANEL RETROFIT, THE EXISTING SIGN POSTS SHALL BE REPLACED WITH NEW POSTS OR EXTENDED WITH ADDITIONAL SECTIONS USING HINGE ASSEMBLIES. REFER TO TRAFFIC TYPICAL SHEETS "EXTRUDED SIGN PANEL - RETROFIT DETAIL".

SAFETY CONSIDERATIONS

1. THE HINGE BETWEEN THE UPPER AND LOWER POSTS SHALL BE AT LEAST 7 FT. ABOVE THE GROUND.
2. NO SUPPLEMENTARY SIGNS SHALL BE ATTACHED BELOW THE HINGES.
3. THE POST SPACING SHALL BE 3/5 W EXCEPT AS NOTED BELOW:

UNIT WEIGHT OF POST	POST SPACING REQUIREMENTS
LESS THAN 17 PLF	NO RESTRICTIONS ON POST SPACING **
FROM 17 PLF TO 44 PLF	PROVIDE AT LEAST 7 FT. CLEAR DISTANCE BETWEEN POSTS ***
EXCEEDS 44 PLF	RELOCATE SIGN OUTSIDE OF CLEAR ZONE OR SHIELD SIGN FROM VEHICULAR IMPACT AS DIRECTED BY THE ENGINEER

**IF THE TOTAL COMBINED WEIGHT OF ONE LOWER POST AND TWO BRACKETS EXCEEDS 600 LBS OR THE COMBINED WEIGHT OF TWO POSTS AND FOUR BRACKETS LOCATED WITHIN A CLEAR DISTANCE OF 7 FT OF EACH OTHER EXCEEDS 600 LBS, THE SIGN SHALL BE RELOCATED OUTSIDE OF THE CLEAR ZONE OR SHALL BE PROPERLY SHIELDED FROM VEHICULAR IMPACT AS DIRECTED BY THE ENGINEER. SEE "TABLE 1 - BRACKET DATA" ON S-35 FOR BRACKET WEIGHT.

*** IF THE REQUIRED CLEAR DISTANCE CANNOT BE ATTAINED, THE ENGINEER MAY DIRECT THAT THE SIGN BE RELOCATED OUTSIDE THE CLEAR ZONE OR THAT IT BE PROPERLY SHIELDED FROM VEHICULAR IMPACT.

BREAKAWAY SIGN SUPPORT TYPICAL SHEETS ARE IN US CUSTOMARY UNITS

FOR METRIC PROJECTS:
1. DETERMINE US CUSTOMARY POST SIZE FROM THE POST SELECTION TABLE.
2. CALCULATE THE WEIGHT OF POSTS IN US CUSTOMARY UNITS (CWT) THEN USE THE FOLLOWING CONVERSION FACTOR TO CONVERT CWT TO KILOGRAMS.

1 CWT = 45.36 KG

EXAMPLE: 120 CWT x 45.36 KG/CWT = 5443 KG

SELECTION A POST SIZE, BRACKET NUMBER, AND HINGE TYPE

1. DETERMINE THE REQUIRED SIGN DIMENSIONS AND POST HEIGHTS (SEE "TYPICAL POST MOUNTED SIGN" DETAIL, THIS SHEET).

   W = SIGN WIDTH (HORIZONTAL DIMENSION)
   H = SIGN HEIGHT (VERTICAL DIMENSION) (ADD CROWN HEIGHT WHEN APPLICABLE)
   L = POST HEIGHT (THE DISTANCE BETWEEN THE TOP OF THE FOUNDATION AND THE BOTTOM OF THE SIGN MEASURED AT THE TALLER POST)

2. ENTER "POST SELECTION TABLE 1 AND 2" ON S-32 AND S-33 WITH THE DESIRED VALUES OF W, H, AND L. ROUND UP TO THE NEAREST VALUES IN THE TABLE. READ THE CORRESPONDING POST SIZE AND BRACKET NUMBER. REFER TO S-35 FOR BRACKET TYPE AND S-36 TYPICAL HINGE REQUIREMENTS.

   EXAMPLE: W = 8', L = 10', H = 14'

   ENTER "POST SELECTION TABLE 1" ON S-32 SINCE TABLE 1 IS APPLICABLE FOR SIGN WIDTH ≤ 15'. LOCATE THE FOLLOWING CELL:

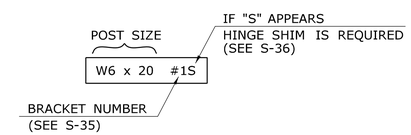

3. IF NO POST SIZE IS SHOWN FOR THE COMBINATION OF DIMENSIONS W, L, AND H, THE ENGINEER WILL EITHER PROVIDE A DESIGN FOR THE POST AND FOUNDATION OR RELOCATE THE SIGN.

REV.	DATE	REVISION DESCRIPTION	SHEET NO.

THE INFORMATION, INCLUDING ESTIMATED QUANTITIES OF WORK, SHOWN ON THESE SHEETS IS BASED ON LIMITED INVESTIGATIONS BY THE STATE AND IS IN NO WAY WARRANTED TO INDICATE THE CONDITIONS OF ACTUAL QUANTITIES OF WORK WHICH WILL BE REQUIRED.

Plotted Date: 12/17/2012

DESIGNER/DRAFTER: BKC
CHECKED BY: JRH
SCALE AS NOTED

STATE OF CONNECTICUT
DEPARTMENT OF TRANSPORTATION

Filename: ...\SB_Breakaway_Signpost_BSM1_General Note.dgn

SIGNATURE/BLOCK: OFFICE OF ENGINEERING
APPROVED BY:

PROJECT TITLE: REPLACEMENT OF OVERHEAD SIGN SUPPORTS ON VARIOUS ROUTES STATEWIDE

TOWN: VARIOUS

DRAWING TITLE: BREAKAWAY SIGN SUPPORTS GENERAL NOTES

PROJECT NO. 170-3065
DRAWING NO. S-1
SHEET NO. 04.31

POST SELECTION TABLE 1

W	L	H (Sign Height + Crown Height)																		
		4 ft	5 ft	6 ft	7 ft	8 ft	9 ft	10 ft	11 ft	12 ft	13 ft	14 ft	15 ft	16 ft	17 ft	18 ft	19 ft	20 ft	21 ft	22 ft
8 ft	7 ft	W6 x 9 #3	W6 x 9 #3	W6 x 9 #2	W6 x 9 #2	W6 x 9 #2	W6 x 12 #2	W6 x 12 #2	W6 x 12 #2	W6 x 15 #2	W6 x 15 #1	W6 x 15 #1S	W6 x 16 #1S	W8 x 18 #2S	W8 x 21 #1S	W10 x 22 #2	W10 x 22 #2	W10 x 26 #2	W10 x 26 #1S	W10 x 26 #1S
	8 ft	W6 x 9 #2	W6 x 9 #2	W6 x 9 #2	W6 x 9 #2	W6 x 12 #2	W6 x 12 #2	W6 x 12 #2	W6 x 15 #2	W6 x 15 #1	W6 x 15 #1	W6 x 16 #1S	W8 x 18 #1	W8 x 21 #1S	W8 x 21 #1S	W10 x 22 #2	W10 x 26 #1	W10 x 26 #1	W10 x 26 #1S	W10 x 30 #1S
	9 ft	W6 x 9 #2	W6 x 9 #2	W6 x 9 #2	W6 x 12 #2	W6 x 12 #2	W6 x 12 #2	W6 x 15 #1	W6 x 15 #1	W6 x 15 #1	W6 x 16 #1	W8 x 18 #1	W6 x 20 #1S	W8 x 21 #1S	W8 x 21 #1S	W10 x 26 #1	W10 x 26 #1	W10 x 26 #1	W10 x 30 #1S	W12 x 30 #1
	10 ft	W6 x 9 #2	W6 x 9 #2	W6 x 12 #2	W6 x 12 #2	W6 x 12 #1	W6 x 15 #1	W6 x 15 #1	W6 x 15 #1	W6 x 15 #1	W8 x 18 #1	W6 x 20 #1S	W6 x 20 #1S	W8 x 21 #1S	W10 x 26 #1	W10 x 26 #1	W10 x 26 #1	-	-	-
	11 ft	W6 x 9 #2	W6 x 9 #2	W6 x 12 #1	W6 x 12 #1	W6 x 15 #1	W6 x 15 #1	W6 x 15 #1	W6 x 15 #1	W8 x 18 #1	W6 x 20 #1	W6 x 20 #1S	W8 x 21 #1	-	-	-	-	-	-	-
	12 ft	W6 x 9 #2	W6 x 12 #1	W6 x 12 #1	W6 x 15 #1	W6 x 15 #1	W6 x 15 #1	W6 x 15 #1	W8 x 18 #1	W6 x 20 #1	W6 x 20 #1	W6 x 20 #1S	-	-	-	-	-	-	-	-
	13 ft	W6 x 12 #1	W6 x 12 #1	W6 x 12 #1	W6 x 15 #1	W6 x 15 #1	W6 x 15 #1	W8 x 18 #1	W8 x 18 #1	W6 x 20 #1	W6 x 20 #1	-	-	-	-	-	-	-	-	-
	14 ft	W6 x 12 #1	W6 x 12 #1	W6 x 15 #1	W6 x 15 #1	W6 x 15 #1	W6 x 16 #1	W8 x 18 #1	W6 x 20 #1	W6 x 20 #1	-	-	-	-	-	-	-	-	-	-
	15 ft	W6 x 12 #1	W6 x 15 #1	W6 x 15 #1	W6 x 15 #1	W6 x 15 #1	W8 x 18 #1	-	-	-	-	-	-	-	-	-	-	-	-	-
	16 ft	W6 x 12 #1	W6 x 15 #1	W6 x 15 #1	W6 x 15 #1	-	-	-	-	-	-	-	-	-	-	-	-	-	-	-
9 ft	7 ft	W6 x 9 #3	W6 x 9 #3	W6 x 9 #2	W6 x 9 #2	W8 x 10 #2	W6 x 12 #2	W6 x 12 #2	W6 x 15 #2	W6 x 15 #2	W6 x 15 #1S	W6 x 15 #1S	W8 x 18 #2S	W8 x 21 #2S	W10 x 22 #2	W10 x 22 #2	W10 x 26 #2	W10 x 26 #2S	W10 x 26 #1S	W12 x 30 #2S
	8 ft	W6 x 9 #2	W6 x 9 #2	W6 x 9 #2	W8 x 10 #2	W6 x 12 #2	W6 x 12 #2	W6 x 15 #2	W6 x 15 #2	W6 x 15 #1	W6 x 15 #1S	W8 x 18 #2	W8 x 21 #2S	W8 x 21 #1S	W10 x 22 #2	W10 x 26 #2	W10 x 26 #1	W10 x 26 #1S	W12 x 30 #2	W12 x 30 #2S
	9 ft	W6 x 9 #2	W6 x 9 #2	W6 x 9 #2	W6 x 12 #2	W6 x 12 #2	W6 x 15 #2	W6 x 15 #1	W6 x 15 #1	W6 x 15 #1	W8 x 18 #2	W6 x 20 #1S	W8 x 21 #1S	W8 x 21 #1S	W10 x 26 #2	W10 x 26 #2	W10 x 26 #1	W10 x 30 #1S	W12 x 30 #1	-
	10 ft	W6 x 9 #2	W6 x 9 #2	W6 x 12 #2	W6 x 12 #2	W6 x 15 #1	W6 x 15 #1	W6 x 15 #1	W6 x 15 #1	W8 x 18 #1	W6 x 20 #1S	W6 x 20 #1S	W8 x 21 #1S	W10 x 26 #1	W10 x 26 #1	W10 x 26 #1	-	-	-	-
	11 ft	W6 x 9 #2	W6 x 12 #2	W6 x 12 #1	W6 x 12 #1	W6 x 15 #1	W6 x 15 #1	W6 x 15 #1	W8 x 18 #1	W8 x 18 #1	W6 x 20 #1S	W8 x 21 #1	-	-	-	-	-	-	-	-
	12 ft	W6 x 9 #2	W6 x 12 #1	W6 x 12 #1	W6 x 15 #1	W6 x 15 #1	W6 x 15 #1	W8 x 18 #1	W8 x 18 #1	W6 x 20 #1	W6 x 20 #1S	-	-	-	-	-	-	-	-	-
	13 ft	W6 x 12 #1	W6 x 12 #1	W6 x 15 #1	W6 x 15 #1	W6 x 15 #1	W6 x 16 #1	W8 x 18 #1	W6 x 20 #1	W6 x 20 #1	-	-	-	-	-	-	-	-	-	-
	14 ft	W6 x 12 #1	W6 x 12 #1	W6 x 15 #1	W6 x 15 #1	W6 x 15 #1	W8 x 18 #1	W6 x 20 #1	W6 x 20 #1	W6 x 20 #1	-	-	-	-	-	-	-	-	-	-
	15 ft	W6 x 12 #1	W6 x 15 #1	W6 x 15 #1	W6 x 15 #1	W8 x 18 #1	-	-	-	-	-	-	-	-	-	-	-	-	-	-
	16 ft	W6 x 15 #1	W6 x 15 #1	W6 x 15 #1	-	-	-	-	-	-	-	-	-	-	-	-	-	-	-	-
10 ft	7 ft	W6 x 9 #3	W6 x 9 #3	W6 x 9 #2	W6 x 9 #2	W6 x 12 #2	W6 x 12 #2	W6 x 12 #2	W6 x 15 #2	W6 x 15 #2	W6 x 15 #1S	W8 x 18 #2	W8 x 18 #2S	W10 x 22 #2	W10 x 22 #2	W10 x 26 #2	W10 x 26 #2S	W10 x 26 #2S	W12 x 30 #2S	W14 x 30 #2S
	8 ft	W6 x 9 #2	W6 x 9 #2	W6 x 9 #2	W6 x 12 #2	W6 x 12 #2	W6 x 12 #2	W6 x 15 #2	W6 x 15 #1	W6 x 15 #1	W8 x 18 #2	W8 x 18 #2S	W8 x 21 #1S	W10 x 22 #2	W10 x 26 #2	W10 x 26 #2	W10 x 26 #1S	W12 x 30 #2	W14 x 30 #2	-
	9 ft	W6 x 9 #2	W6 x 9 #2	W6 x 12 #2	W6 x 12 #2	W6 x 12 #2	W6 x 15 #2	W6 x 15 #1	W6 x 15 #1	W8 x 18 #2	W8 x 18 #1	W6 x 20 #1S	W8 x 21 #1S	W10 x 26 #2	W10 x 26 #1	W10 x 26 #1	W10 x 30 #1S	W12 x 30 #2	-	-
	10 ft	W6 x 9 #2	W6 x 12 #2	W6 x 12 #2	W6 x 12 #2	W6 x 15 #1	W6 x 15 #1	W6 x 15 #1	W6 x 16 #1	W8 x 18 #1	W6 x 20 #1S	W8 x 21 #1S	W10 x 26 #2	W10 x 26 #1	W10 x 26 #1	-	-	-	-	-
	11 ft	W6 x 9 #2	W6 x 12 #2	W6 x 12 #1	W6 x 15 #1	W6 x 15 #1	W6 x 15 #1	W6 x 16 #1	W8 x 18 #1	W6 x 20 #1	W6 x 20 #1S	W8 x 24 #1S	-	-	-	-	-	-	-	-
	12 ft	W6 x 12 #2	W6 x 12 #1	W6 x 15 #1	W6 x 15 #1	W6 x 15 #1	W6 x 15 #1	W8 x 18 #1	W6 x 20 #1	W6 x 20 #1	W10 x 22 #1	-	-	-	-	-	-	-	-	-
	13 ft	W6 x 12 #1	W6 x 12 #1	W6 x 15 #1	W6 x 15 #1	W6 x 15 #1	W8 x 18 #1	W6 x 20 #1	W6 x 20 #1	W8 x 21 #1	-	-	-	-	-	-	-	-	-	-
	14 ft	W6 x 12 #1	W6 x 12 #1	W6 x 15 #1	W6 x 15 #1	W8 x 18 #1	W6 x 20 #1	W6 x 20 #1	W6 x 20 #1	-	-	-	-	-	-	-	-	-	-	-
	15 ft	W6 x 12 #1	W6 x 15 #1	W6 x 15 #1	W6 x 16 #1	W8 x 18 #1	-	-	-	-	-	-	-	-	-	-	-	-	-	-
	16 ft	W6 x 15 #1	W6 x 15 #1	W6 x 15 #1	-	-	-	-	-	-	-	-	-	-	-	-	-	-	-	-
11 ft	7 ft	W6 x 9 #3	W6 x 9 #3	W6 x 9 #2	W8 x 10 #3	W6 x 12 #2	W6 x 12 #2	W6 x 15 #2	W6 x 15 #2	W6 x 15 #2S	W6 x 15 #1S	W8 x 18 #2S	W8 x 21 #2S	W10 x 22 #2	W10 x 22 #2	W10 x 26 #2	W10 x 26 #2S	W12 x 26 #2S	W14 x 30 #2S	W16 x 36 #2S
	8 ft	W6 x 9 #2	W6 x 9 #2	W6 x 9 #2	W6 x 12 #2	W6 x 12 #2	W6 x 15 #2	W6 x 15 #2	W6 x 15 #1	W6 x 15 #1S	W8 x 18 #2	W8 x 21 #2S	W8 x 21 #1S	W10 x 22 #2	W10 x 26 #2	W10 x 26 #2S	W12 x 30 #2	W14 x 30 #2	-	-
	9 ft	W6 x 9 #2	W6 x 9 #2	W6 x 12 #2	W6 x 12 #2	W6 x 12 #2	W6 x 15 #2	W6 x 15 #2	W6 x 15 #1	W8 x 18 #2	W6 x 20 #1S	W8 x 21 #1S	W10 x 22 #2	W10 x 26 #2	W10 x 26 #2	W10 x 26 #1S	W12 x 30 #2	-	-	-
	10 ft	W6 x 9 #2	W6 x 12 #2	W6 x 12 #2	W6 x 12 #2	W6 x 15 #2	W6 x 15 #1	W6 x 15 #1	W6 x 15 #1	W8 x 18 #2	W6 x 20 #1S	W8 x 21 #1S	W10 x 26 #2	W10 x 26 #1	W10 x 26 #1	-	-	-	-	-
	11 ft	W6 x 9 #2	W6 x 12 #2	W6 x 12 #1	W6 x 15 #1	W6 x 15 #1	W6 x 15 #1	W8 x 18 #1	W6 x 20 #1	W6 x 20 #1S	W8 x 21 #1	-	-	-	-	-	-	-	-	-
	12 ft	W6 x 12 #2	W6 x 12 #1	W6 x 15 #1	W6 x 15 #1	W6 x 15 #1	W8 x 18 #1	W6 x 20 #1	W6 x 20 #1	W8 x 21 #1	-	-	-	-	-	-	-	-	-	-
	13 ft	W6 x 12 #1	W6 x 15 #1	W6 x 15 #1	W6 x 15 #1	W8 x 18 #1	W8 x 18 #1	W6 x 20 #1	W6 x 20 #1	-	-	-	-	-	-	-	-	-	-	-
	14 ft	W6 x 12 #1	W6 x 15 #1	W6 x 15 #1	W6 x 15 #1	W8 x 18 #1	W6 x 20 #1	W6 x 20 #1	-	-	-	-	-	-	-	-	-	-	-	-
	15 ft	W6 x 15 #1	W6 x 15 #1	W6 x 15 #1	W8 x 18 #1	-	-	-	-	-	-	-	-	-	-	-	-	-	-	-
	16 ft	W6 x 15 #1	W6 x 15 #1	-	-	-	-	-	-	-	-	-	-	-	-	-	-	-	-	-
12 ft	7 ft	W6 x 9 #3	W6 x 9 #3	W6 x 9 #2	W6 x 12 #2	W6 x 12 #2	W6 x 12 #2	W6 x 15 #2	W6 x 15 #2	W6 x 15 #2S	W8 x 18 #2S	W8 x 18 #2S	W10 x 22 #2	W10 x 22 #2	W10 x 26 #2	W10 x 26 #2S	W12 x 26 #2S	W14 x 30 #2S	W18 x 35 #2	W18 x 40 #2
	8 ft	W6 x 9 #2	W6 x 9 #2	W6 x 12 #2	W6 x 12 #2	W6 x 12 #2	W6 x 15 #2	W6 x 15 #2	W6 x 15 #1	W8 x 18 #2	W8 x 18 #2S	W8 x 21 #2S	W10 x 22 #2	W10 x 26 #2	W10 x 26 #2	W12 x 26 #2	W14 x 30 #2	W18 x 35 #2	-	-
	9 ft	W6 x 9 #2	W8 x 10 #2	W6 x 12 #2	W6 x 12 #2	W6 x 15 #2	W6 x 15 #2	W6 x 15 #1	W8 x 18 #2	W8 x 18 #2	W8 x 21 #1S	W8 x 21 #1S	W10 x 26 #2	W10 x 26 #2	W10 x 26 #1	W12 x 30 #2	-	-	-	-
	10 ft	W6 x 9 #2	W6 x 12 #2	W6 x 12 #2	W6 x 12 #2	W6 x 15 #2	W6 x 15 #1	W6 x 15 #1	W8 x 18 #2	W8 x 18 #1	W6 x 20 #1S	W8 x 21 #1S	W10 x 26 #2	W10 x 26 #1	W10 x 26 #1	-	-	-	-	-
	11 ft	W6 x 12 #2	W6 x 12 #2	W6 x 15 #1	W6 x 15 #1	W6 x 16 #1	W6 x 16 #1	W8 x 18 #1	W6 x 20 #1	W8 x 21 #1	-	-	-	-	-	-	-	-	-	-
	12 ft	W6 x 12 #2	W6 x 12 #1	W6 x 15 #1	W6 x 15 #1	W6 x 15 #1	W8 x 18 #1	W6 x 20 #1	W6 x 20 #1	-	-	-	-	-	-	-	-	-	-	-
	13 ft	W6 x 12 #1	W6 x 15 #1	W6 x 15 #1	W6 x 15 #1	W8 x 18 #1	W6 x 20 #1	W6 x 20 #1	-	-	-	-	-	-	-	-	-	-	-	-
	14 ft	W6 x 12 #1	W6 x 15 #1	W6 x 15 #1	W8 x 18 #1	W6 x 20 #1	W6 x 20 #1	W6 x 20 #1	-	-	-	-	-	-	-	-	-	-	-	-
	15 ft	W6 x 15 #1	W6 x 15 #1	W6 x 16 #1	W8 x 18 #1	-	-	-	-	-	-	-	-	-	-	-	-	-	-	-
	16 ft	W6 x 15 #1	W6 x 15 #1	-	-	-	-	-	-	-	-	-	-	-	-	-	-	-	-	-
13 ft	7 ft	W6 x 9 #3	W6 x 9 #2	W6 x 9 #2	W6 x 12 #2	W6 x 12 #2	W6 x 15 #2	W6 x 15 #2	W6 x 15 #2S	W6 x 15 #2S	W8 x 18 #2S	W8 x 21 #2S	W10 x 22 #2	W10 x 22 #2	W10 x 26 #2S	W12 x 26 #2	W14 x 30 #2	W18 x 35 #3	W18 x 40 #2	W21 x 44 #3
	8 ft	W6 x 9 #2	W6 x 9 #2	W6 x 12 #2	W6 x 12 #2	W6 x 15 #2	W6 x 15 #2	W6 x 15 #2	W6 x 15 #1S	W8 x 18 #2	W8 x 21 #2S	W8 x 21 #2S	W10 x 22 #2	W10 x 26 #2	W10 x 26 #2S	W12 x 30 #2	W14 x 34 #2	W18 x 40 #2	W21 x 44 #3	W21 x 44 #3
	9 ft	W6 x 9 #2	W6 x 12 #2	W6 x 12 #2	W6 x 15 #2	W6 x 15 #2	W6 x 15 #1	W6 x 15 #1	W8 x 18 #2	W6 x 20 #1S	W8 x 21 #1S	W10 x 22 #2	W10 x 26 #2	W10 x 26 #2	W12 x 30 #2	W14 x 30 #2	W16 x 36 #2	W18 x 40 #2	W21 x 44 #2	-
	10 ft	W6 x 9 #2	W6 x 12 #2	W6 x 12 #2	W6 x 15 #2	W6 x 15 #1	W6 x 15 #1	W8 x 18 #2	W6 x 20 #1S	W8 x 21 #1	W10 x 22 #2	W10 x 26 #2	W10 x 26 #1	W12 x 30 #2	W14 x 30 #2	W16 x 36 #2	W18 x 40 #2	W21 x 44 #2	-	-
	11 ft	W6 x 12 #2	W6 x 12 #2	W6 x 15 #1	W6 x 15 #1	W6 x 15 #1	W6 x 15 #1	W8 x 18 #2	W6 x 20 #1	W6 x 20 #1S	W8 x 21 #1	W10 x 26 #2	W10 x 26 #1	W10 x 30 #1	W12 x 30 #2	W14 x 34 #2	W18 x 40 #2	W21 x 44 #2	-	-
	12 ft	W6 x 15 #1	W6 x 15 #1	W6 x 15 #1	W8 x 18 #1	W6 x 20 #1	W6 x 20 #1	W8 x 18 #1	W8 x 21 #1	W10 x 26 #1	W10 x 26 #1	W10 x 26 #1	W10 x 26 #1	W12 x 30 #1	W14 x 34 #2	W16 x 36 #2	W18 x 40 #2	-	-	-
	13 ft	W6 x 12 #1	W6 x 15 #1	W6 x 15 #1	W6 x 16 #1	W8 x 18 #1	W6 x 20 #1	W8 x 21 #1	W10 x 26 #1	W10 x 26 #1	W10 x 26 #1	W10 x 30 #1	W12 x 30 #1	W16 x 36 #2	W18 x 40 #2	-	-	-	-	-
	14 ft	W6 x 15 #1	W6 x 15 #1	W6 x 15 #1	W8 x 18 #1	W6 x 20 #1	W6 x 20 #1	W8 x 24 #1	W10 x 26 #1	W10 x 26 #1	W10 x 30 #1	W12 x 30 #1	W14 x 34 #1	W16 x 40 #2	-	-	-	-	-	-
	15 ft	W6 x 15 #1	W6 x 15 #1	W6 x 18 #1	W6 x 20 #1	W6 x 20 #1	W8 x 24 #1	W10 x 26 #1	W10 x 26 #1	W10 x 30 #1	W10 x 30 #1	W14 x 34 #1	-	-	-	-	-	-	-	-
	16 ft	W6 x 15 #1	W6 x 16 #1	W8 x 18 #1	W6 x 20 #1	W6 x 20 #1	W8 x 24 #1	W10 x 26 #1	W10 x 30 #1	W10 x 30 #1	W14 x 34 #1	W14 x 34 #1	-	-	-	-	-	-	-	-
14 ft	7 ft	W6 x 9 #3	W6 x 9 #2	W8 x 10 #3	W6 x 12 #2	W6 x 12 #2	W6 x 15 #2	W6 x 15 #2	W6 x 15 #2S	W8 x 18 #2	W8 x 18 #2S	W10 x 22 #2	W10 x 22 #2	W10 x 26 #2	W10 x 26 #2S	W12 x 26 #2S	W14 x 30 #2S	W18 x 35 #3	W21 x 44 #3	-
	8 ft	W6 x 9 #2	W6 x 9 #2	W6 x 12 #2	W6 x 12 #2	W6 x 15 #2	W6 x 15 #2	W6 x 15 #2	W8 x 18 #2	W8 x 18 #2S	W8 x 21 #2S	W10 x 22 #2	W10 x 26 #2	W10 x 26 #2	W12 x 26 #2	W14 x 30 #2	W18 x 35 #2	W18 x 40 #2	W21 x 44 #3	-
	9 ft	W6 x 9 #2	W6 x 12 #2	W6 x 12 #2	W6 x 15 #2	W6 x 15 #2	W6 x 15 #1	W8 x 18 #2	W8 x 18 #2	W8 x 21 #2S	W10 x 22 #2	W10 x 26 #2	W10 x 26 #2	W12 x 26 #2	W14 x 30 #2	W16 x 36 #2	W18 x 40 #2	W21 x 44 #3	-	-
	10 ft	W6 x 12 #2	W6 x 12 #2	W6 x 15 #2	W6 x 15 #2	W6 x 15 #1	W8 x 18 #2	W8 x 18 #2	W6 x 20 #1S	W8 x 21 #1S	W10 x 26 #2	W10 x 26 #2	W10 x 26 #1	W12 x 30 #2	W16 x 36 #2	W18 x 40 #2	W21 x 44 #3	-	-	-
	11 ft	W6 x 12 #2	W6 x 12 #2	W6 x 15 #1	W6 x 15 #1	W6 x 16 #1	W8 x 18 #2	W6 x 20 #1	W8 x 21 #1	W10 x 26 #2	W10 x 26 #2	W10 x 26 #1	W12 x 30 #2	W14 x 34 #2	W16 x 36 #2	W18 x 40 #2	-	-	-	-
	12 ft	W6 x 12 #1	W6 x 15 #1	W6 x 15 #1	W6 x 15 #1	W8 x 18 #1	W6 x 20 #1	W8 x 21 #1	W10 x 26 #2	W10 x 26 #1	W10 x 26 #1	W10 x 30 #1	W14 x 34 #2	W16 x 36 #2	W18 x 40 #2	-	-	-	-	-
	13 ft	W6 x 12 #1	W6 x 15 #1	W6 x 15 #1	W8 x 18 #1	W6 x 20 #1	W6 x 20 #1	W8 x 24 #1	W10 x 26 #1	W10 x 26 #1	W10 x 30 #1	W12 x 30 #1	W14 x 34 #2	W18 x 40 #2	-	-	-	-	-	-
	14 ft	W6 x 15 #1	W6 x 15 #1	W6 x 16 #1	W6 x 20 #1	W6 x 20 #1	W8 x 21 #1	W10 x 26 #1	W10 x 26 #1	W10 x 30 #1	W12 x 30 #1	W14 x 34 #2	W16 x 36 #2	W18 x 40 #2	-	-	-	-	-	-
	15 ft	W6 x 15 #1	W6 x 15 #1	W8 x 18 #1	W6 x 20 #1	W6 x 20 #1	W8 x 24 #1	W10 x 26 #1	W10 x 30 #1	W12 x 30 #1	W14 x 34 #1	-	-	-	-	-	-	-	-	-
	16 ft	W6 x 15 #1	W8 x 18 #1	W6 x 20 #1	W6 x 20 #1	W8 x 24 #1	W10 x 26 #1	W10 x 26 #1	W10 x 30 #1	W12 x 30 #1	W14 x 34 #1	-	-	-	-	-	-	-	-	-
15 ft	7 ft	-	W6 x 9 #2	W8 x 10 #3	W6 x 12 #2	W12 x 14 #3	W6 x 15 #2	W6 x 15 #2S	W6 x 15 #2S	W8 x 18 #2S	W8 x 21 #2S	W10 x 22 #2	W10 x 22 #2	W10 x 26 #2S	W12 x 26 #2	W14 x 30 #2	W18 x 35 #3	W18 x 40 #3	W21 x 44 #3	-
	8 ft	-	W8 x 10 #3	W6 x 12 #2	W12 x 14 #3	W6 x 15 #2	W6 x 15 #2	W6 x 15 #2S	W8 x 18 #2	W8 x 21 #2S	W10 x 22 #2	W10 x 22 #2	W10 x 26 #2	W12 x 26 #2	W14 x 30 #2	W18 x 35 #3	W18 x 40 #2	W21 x 44 #3	-	-
	9 ft	-	W6 x 12 #2	W6 x 12 #2	W6 x 15 #2	W6 x 15 #2	W6 x 15 #1	W8 x 18 #2	W6 x 20 #1S	W8 x 21 #2S	W10 x 22 #2	W10 x 26 #2	W10 x 26 #2	W12 x 30 #2	W14 x 34 #2	W18 x 40 #2	W21 x 44 #3	-	-	-
	10 ft	-	W6 x 12 #2	W6 x 15 #2	W6 x 15 #2	W6 x 15 #1	W8 x 18 #2	W6 x 20 #1S	W8 x 21 #1	W10 x 22 #2	W10 x 26 #2	W10 x 26 #2	W12 x 30 #2	W14 x 30 #2	W16 x 36 #2	W18 x 40 #2	W21 x 44 #2	-	-	-
	11 ft	-	W6 x 15 #2	W6 x 15 #1	W6 x 15 #1	W8 x 18 #2	W6 x 20 #1	W8 x 21 #1	W10 x 22 #2	W10 x 26 #2	W10 x 26 #1	W10 x 30 #1	W14 x 30 #2	W16 x 36 #2	W18 x 40 #2	W21 x 44 #2	-	-	-	-
	12 ft	-	W6 x 15 #1	W6 x 15 #1	W6 x 16 #1	W8 x 18 #1	W6 x 20 #1	W8 x 21 #1	W10 x 26 #2	W10 x 26 #1	W10 x 30 #1	W12 x 30 #2	W14 x 34 #2	W18 x 40 #2	W21 x 44 #2	-	-	-	-	-
	13 ft	-	W6 x 15 #1	W6 x 15 #1	W8 x 18 #1	W6 x 20 #1	W8 x 21 #1	W10 x 26 #1	W10 x 26 #1	W10 x 26 #1	W12 x 30 #2	W14 x 34 #2	W16 x 36 #2	W18 x 40 #2	-	-	-	-	-	-
	14 ft	-	W6 x 15 #1	W8 x 18 #1	W6 x 20 #1	W6 x 20 #1	W8 x 24 #1	W10 x 26 #1	W10 x 26 #1	W10 x 30 #1	W12 x 30 #1	W16 x 36 #2	W18 x 40 #2	-	-	-	-	-	-	-
	15 ft	-	W6 x 16 #1	W8 x 18 #1	W6 x 20 #1	W8 x 24 #1	W10 x 26 #1	W10 x 26 #1	W10 x 30 #1	W12 x 30 #1	W14 x 34 #1	-	-	-	-	-	-	-	-	-
	16 ft	-	W8 x 18 #1	W6 x 20 #1	W6 x 20 #1	W8 x 24 #1	W10 x 26 #1	W10 x 30 #1	W10 x 30 #1	W14 x 34 #1	-	-	-	-	-	-	-	-	-	-

REV.	DATE	REVISION DESCRIPTION	SHEET NO.

THE INFORMATION, INCLUDING ESTIMATED QUANTITIES OF WORK, SHOWN ON THESE SHEETS IS BASED ON LIMITED INVESTIGATIONS BY THE STATE AND IS IN NO WAY WARRANTED TO INDICATE THE CONDITIONS OF ACTUAL QUANTITIES OF WORK WHICH WILL BE REQUIRED.

Plotted Date: 12/17/2012

DESIGNER/DRAFTER: BKC
CHECKED BY: JRH
SCALE AS NOTED

STATE OF CONNECTICUT
DEPARTMENT OF TRANSPORTATION

Filename: ...\SB_Breakaway_Signpost_BSM2_PostSelectionTable_1.dgn

SIGNATURE/BLOCK: OFFICE OF ENGINEERING
APPROVED BY:

PROJECT TITLE: REPLACEMENT OF OVERHEAD SIGN SUPPORTS ON VARIOUS ROUTES STATEWIDE

TOWN: VARIOUS

DRAWING TITLE: BREAKAWAY SIGN SUPPORTS POST SELECTION TABLE 1

PROJECT NO. 170-3065
DRAWING NO. S-32
SHEET NO. 04.32

POST SELECTION TABLE 2

W	L	H (Sign Height + Crown Height)																		
		4 ft	5 ft	6 ft	7 ft	8 ft	9 ft	10 ft	11 ft	12 ft	13 ft	14 ft	15 ft	16 ft	17 ft	18 ft	19 ft	20 ft	21 ft	22 ft
16 ft	7 ft	-	W6 x 9 #2	W6 x 12 #2	W6 x 12 #2	W6 x 15 #2	W6 x 15 #2	W6 x 15 #2S	W8 x 18 #2	W8 x 18 #2S	W10 x 22 #2	W10 x 22 #2	W10 x 26 #2	W10 x 26 #2S	W12 x 26 #2S	W18 x 35 #3	W18 x 35 #3	W21 x 44 #3	-	-
	8 ft	-	W8 x 10 #3	W6 x 12 #2	W6 x 15 #2	W6 x 15 #2	W6 x 15 #2	W6 x 16 #2S	W8 x 18 #2	W8 x 21 #2S	W10 x 22 #2	W10 x 26 #2	W10 x 26 #2	W12 x 26 #2	W14 x 30 #2	W18 x 35 #3	W21 x 44 #3	-	-	-
	9 ft	-	W6 x 12 #2	W6 x 15 #2	W6 x 15 #2	W6 x 15 #2	W6 x 16 #1	W8 x 18 #2	W8 x 21 #2	W10 x 22 #2	W10 x 26 #2	W10 x 26 #2	W12 x 26 #2	W14 x 30 #2	W18 x 35 #2	W18 x 40 #2	W21 x 44 #3	-	-	-
	10 ft	-	W6 x 12 #2	W6 x 15 #2	W6 x 15 #2	W6 x 16 #1	W8 x 18 #2	W8 x 21 #2	W8 x 21 #1	W10 x 26 #2	W10 x 26 #2	W12 x 26 #2	W14 x 30 #2	W16 x 36 #2	W18 x 40 #2	W21 x 44 #3	-	-	-	-
	11 ft	-	W6 x 15 #2	W6 x 15 #1	W6 x 15 #1	W8 x 18 #2	W6 x 20 #1	W8 x 21 #1	W10 x 26 #2	W10 x 26 #2	W10 x 26 #1	W12 x 30 #2	W14 x 34 #2	W18 x 40 #2	W21 x 44 #3	-	-	-	-	-
	12 ft	-	W6 x 15 #1	W6 x 15 #1	W8 x 18 #2	W6 x 20 #1	W8 x 21 #1	W10 x 26 #2	W10 x 26 #2	W10 x 26 #1	W12 x 30 #2	W14 x 34 #2	W16 x 36 #2	W18 x 40 #2	-	-	-	-	-	-
	13 ft	-	W6 x 15 #1	W6 x 16 #1	W6 x 20 #1	W6 x 20 #1	W10 x 22 #2	W10 x 26 #1	W10 x 26 #1	W10 x 30 #1	W14 x 34 #2	W16 x 36 #2	W18 x 40 #2	-	-	-	-	-	-	-
	14 ft	-	W6 x 15 #1	W8 x 18 #1	W6 x 20 #1	W8 x 21 #1	W10 x 26 #1	W10 x 26 #1	W10 x 30 #1	W12 x 30 #1	W14 x 34 #2	W18 x 40 #2	-	-	-	-	-	-	-	-
	15 ft	-	W8 x 18 #1	W6 x 20 #1	W6 x 20 #1	W8 x 24 #1	W10 x 26 #1	W10 x 30 #1	W10 x 30 #1	W14 x 34 #2	W16 x 36 #2	-	-	-	-	-	-	-	-	-
	16 ft	-	W8 x 18 #1	W6 x 20 #1	W8 x 24 #1	W10 x 26 #1	W10 x 26 #1	W10 x 30 #1	W12 x 30 #1	W14 x 34 #1	-	-	-	-	-	-	-	-	-	-
17 ft	7 ft	-	W6 x 9 #2	W6 x 12 #2	W6 x 12 #2	W6 x 15 #2	W6 x 15 #2	W6 x 15 #2S	W8 x 18 #2S	W8 x 21 #2S	W10 x 22 #2	W10 x 22 #2	W10 x 26 #2S	W12 x 26 #2	W14 x 30 #2	W18 x 35 #3	W21 x 44 #3	-	-	-
	8 ft	-	W6 x 12 #2	W6 x 12 #2	W6 x 15 #2	W6 x 15 #2	W6 x 15 #2	W8 x 18 #2	W8 x 21 #2S	W10 x 22 #2	W10 x 22 #2	W10 x 26 #2	W12 x 26 #2	W14 x 30 #2	W18 x 35 #3	W18 x 40 #3	W21 x 44 #3	-	-	-
	9 ft	-	W6 x 12 #2	W6 x 15 #2	W6 x 15 #2	W6 x 15 #2	W8 x 18 #2	W6 x 20 #1S	W8 x 21 #2S	W10 x 22 #2	W10 x 26 #2	W10 x 26 #2	W14 x 30 #2	W18 x 35 #3	W18 x 40 #2	W21 x 44 #3	-	-	-	-
	10 ft	-	W6 x 12 #2	W6 x 15 #2	W6 x 15 #1	W8 x 18 #2	W6 x 20 #1	W8 x 21 #2	W10 x 22 #2	W10 x 26 #2	W10 x 26 #2	W12 x 30 #2	W14 x 34 #2	W18 x 40 #2	W21 x 44 #3	-	-	-	-	-
	11 ft	-	W6 x 15 #2	W6 x 15 #1	W6 x 16 #1	W8 x 18 #2	W8 x 21 #2	W10 x 22 #2	W10 x 26 #2	W10 x 26 #2	W12 x 30 #2	W14 x 30 #2	W16 x 36 #2	W18 x 40 #2	W21 x 44 #3	-	-	-	-	-
	12 ft	-	W6 x 15 #1	W6 x 15 #1	W8 x 18 #2	W6 x 20 #1	W8 x 21 #1	W10 x 26 #2	W10 x 26 #2	W10 x 30 #1	W14 x 30 #2	W16 x 36 #2	W18 x 40 #2	W21 x 44 #2	-	-	-	-	-	-
	13 ft	-	W6 x 15 #1	W8 x 18 #1	W6 x 20 #1	W8 x 21 #1	W10 x 26 #2	W10 x 26 #1	W10 x 26 #1	W12 x 30 #2	W14 x 34 #2	W18 x 40 #2	W21 x 44 #2	-	-	-	-	-	-	-
	14 ft	-	W6 x 15 #1	W8 x 18 #1	W6 x 20 #1	W8 x 24 #1	W10 x 26 #1	W10 x 26 #1	W12 x 30 #2	W14 x 34 #2	W16 x 36 #2	W18 x 40 #2	-	-	-	-	-	-	-	-
	15 ft	-	W8 x 18 #1	W6 x 20 #1	W8 x 21 #1	W10 x 26 #1	W10 x 26 #1	W10 x 30 #1	W12 x 30 #1	W16 x 36 #2	-	-	-	-	-	-	-	-	-	-
	16 ft	-	W6 x 20 #1	W6 x 20 #1	W8 x 24 #1	W10 x 26 #1	W10 x 30 #1	W12 x 30 #1	W14 x 34 #1	-	-	-	-	-	-	-	-	-	-	-
18 ft	7 ft	-	W8 x 10 #3	W6 x 12 #2	W12 x 14 #3	W6 x 15 #2	W6 x 15 #2S	W6 x 15 #2S	W8 x 18 #2S	W8 x 21 #2S	W10 x 22 #2	W10 x 26 #2	W12 x 26 #2	W14 x 30 #2	W18 x 35 #3	W18 x 35 #3	W21 x 44 #3	-	-	-
	8 ft	-	W6 x 12 #2	W6 x 12 #2	W6 x 15 #2	W6 x 15 #2	W6 x 15 #2S	W8 x 18 #2	W8 x 21 #2S	W10 x 22 #2	W10 x 26 #2	W10 x 26 #2	W12 x 26 #2	W18 x 35 #3	W18 x 35 #3	W21 x 44 #3	-	-	-	-
	9 ft	-	W6 x 12 #2	W6 x 15 #2	W6 x 15 #2	W6 x 15 #2	W8 x 18 #2	W8 x 21 #2	W10 x 22 #2	W10 x 26 #2	W10 x 26 #2	W12 x 26 #2	W14 x 30 #2	W18 x 35 #3	W21 x 44 #3	-	-	-	-	-
	10 ft	-	W6 x 15 #2	W6 x 15 #2	W6 x 15 #1	W8 x 18 #2	W8 x 21 #2	W8 x 21 #2	W10 x 26 #2	W10 x 26 #2	W12 x 26 #2	W14 x 30 #2	W18 x 35 #2	W18 x 40 #2	W21 x 44 #3	-	-	-	-	-
	11 ft	-	W6 x 15 #2	W6 x 15 #1	W8 x 18 #2	W6 x 20 #1	W8 x 21 #2	W10 x 22 #2	W10 x 26 #2	W10 x 26 #2	W12 x 30 #2	W16 x 36 #2	W18 x 40 #2	W21 x 44 #3	-	-	-	-	-	-
	12 ft	-	W6 x 15 #1	W6 x 15 #1	W8 x 18 #2	W8 x 21 #1	W10 x 22 #2	W10 x 26 #2	W10 x 26 #2	W10 x 30 #1	W14 x 30 #2	W16 x 36 #2	W18 x 40 #2	W21 x 44 #3	-	-	-	-	-	-
	13 ft	-	W6 x 15 #1	W8 x 18 #1	W6 x 20 #1	W8 x 21 #1	W10 x 26 #2	W10 x 26 #1	W10 x 30 #1	W14 x 34 #2	W16 x 36 #2	W18 x 40 #2	-	-	-	-	-	-	-	-
	14 ft	-	W6 x 16 #1	W6 x 20 #1	W6 x 20 #1	W10 x 26 #1	W10 x 26 #1	W10 x 30 #1	W12 x 30 #2	W16 x 36 #2	W18 x 40 #2	-	-	-	-	-	-	-	-	-
	15 ft	-	W8 x 18 #1	W6 x 20 #1	W8 x 24 #1	W10 x 26 #1	W10 x 26 #1	W12 x 30 #1	W14 x 34 #2	W16 x 36 #2	-	-	-	-	-	-	-	-	-	-
	16 ft	-	W6 x 20 #1	W6 x 20 #1	W10 x 26 #1	W10 x 26 #1	W10 x 30 #1	W12 x 30 #1	W16 x 36 #2	-	-	-	-	-	-	-	-	-	-	-
19 ft	7 ft	-	-	W6 x 12 #2	W12 x 14 #3	W6 x 15 #2	W6 x 15 #2S	W8 x 18 #2	W8 x 18 #2S	W10 x 22 #2	W10 x 22 #2	W10 x 26 #2	W12 x 26 #2	W14 x 30 #2	W18 x 35 #3	W21 x 44 #3	-	-	-	-
	8 ft	-	-	W12 x 14 #3	W6 x 15 #2	W6 x 15 #2	W6 x 16 #2S	W8 x 18 #2	W10 x 22 #2	W10 x 22 #2	W10 x 26 #2	W12 x 26 #2	W14 x 30 #2	W18 x 35 #3	W21 x 44 #3	W21 x 44 #3	-	-	-	-
	9 ft	-	-	W6 x 15 #2	W6 x 15 #2	W6 x 16 #2	W8 x 18 #2	W8 x 21 #2	W10 x 22 #2	W10 x 26 #2	W12 x 26 #2	W14 x 30 #2	W18 x 35 #3	W18 x 35 #3	W21 x 44 #3	-	-	-	-	-
	10 ft	-	-	W6 x 15 #2	W6 x 15 #1	W8 x 18 #2	W8 x 21 #2	W10 x 22 #2	W10 x 26 #2	W10 x 26 #2	W12 x 26 #2	W18 x 35 #3	W18 x 40 #3	W21 x 44 #3	-	-	-	-	-	-
	11 ft	-	-	W6 x 15 #1	W8 x 18 #2	W6 x 20 #1	W8 x 21 #1	W10 x 26 #2	W10 x 26 #2	W12 x 26 #2	W14 x 30 #2	W16 x 36 #2	W21 x 44 #3	-	-	-	-	-	-	-
	12 ft	-	-	W8 x 18 #2	W6 x 20 #1	W8 x 21 #1	W10 x 26 #2	W10 x 26 #2	W10 x 26 #1	W14 x 30 #2	W16 x 36 #2	W18 x 40 #2	W21 x 44 #3	-	-	-	-	-	-	-
	13 ft	-	-	W8 x 18 #1	W6 x 20 #1	W10 x 22 #2	W10 x 26 #2	W10 x 26 #1	W12 x 30 #2	W16 x 36 #2	W18 x 40 #2	W21 x 44 #2	-	-	-	-	-	-	-	-
	14 ft	-	-	W6 x 20 #1	W8 x 21 #1	W10 x 26 #1	W10 x 26 #1	W12 x 30 #2	W14 x 34 #2	W16 x 36 #2	-	-	-	-	-	-	-	-	-	-
	15 ft	-	-	W6 x 20 #1	W8 x 24 #1	W10 x 26 #1	W10 x 30 #1	W12 x 30 #1	W16 x 36 #2	-	-	-	-	-	-	-	-	-	-	-
	16 ft	-	-	W6 x 20 #1	W10 x 26 #1	W10 x 26 #1	W10 x 30 #1	W14 x 34 #2	-	-	-	-	-	-	-	-	-	-	-	-
20 ft	7 ft	-	-	W6 x 12 #2	W6 x 15 #2	W6 x 15 #2	W6 x 15 #2S	W8 x 18 #2S	W8 x 21 #2S	W10 x 22 #2	W10 x 22 #2	W12 x 26 #2	W14 x 30 #3	W16 x 31 #3	W18 x 35 #3	W21 x 44 #3	-	-	-	-
	8 ft	-	-	W6 x 15 #2	W6 x 15 #2	W6 x 15 #2	W8 x 18 #2	W8 x 21 #2S	W10 x 22 #2	W10 x 22 #2	W10 x 26 #2	W12 x 26 #2	W18 x 35 #3	W18 x 35 #3	W21 x 44 #3	-	-	-	-	-
	9 ft	-	-	W6 x 15 #2	W6 x 15 #2	W8 x 18 #2	W8 x 21 #2	W10 x 22 #2	W10 x 22 #2	W10 x 26 #2	W12 x 26 #2	W14 x 34 #2	W18 x 35 #3	W21 x 44 #3	-	-	-	-	-	-
	10 ft	-	-	W6 x 15 #2	W6 x 16 #1	W8 x 18 #2	W8 x 21 #2	W10 x 22 #2	W10 x 26 #2	W12 x 26 #2	W14 x 30 #2	W18 x 35 #3	W21 x 44 #3	W21 x 44 #3	-	-	-	-	-	-
	11 ft	-	-	W6 x 15 #1	W8 x 18 #2	W8 x 21 #2	W10 x 22 #2	W10 x 26 #2	W10 x 26 #2	W12 x 30 #2	W18 x 35 #2	W18 x 40 #2	W21 x 44 #3	-	-	-	-	-	-	-
	12 ft	-	-	W8 x 18 #2	W6 x 20 #1	W8 x 21 #1	W10 x 26 #2	W10 x 26 #2	W12 x 30 #2	W14 x 30 #2	W18 x 40 #2	W21 x 44 #3	-	-	-	-	-	-	-	-
	13 ft	-	-	W6 x 20 #1	W8 x 21 #1	W10 x 26 #2	W10 x 26 #2	W10 x 30 #1	W14 x 30 #2	W16 x 36 #2	W18 x 40 #2	W21 x 44 #2	-	-	-	-	-	-	-	-
	14 ft	-	-	W6 x 20 #1	W8 x 21 #1	W10 x 26 #1	W10 x 26 #1	W12 x 30 #2	W16 x 36 #2	W18 x 40 #2	-	-	-	-	-	-	-	-	-	-
	15 ft	-	-	W6 x 20 #1	W10 x 26 #1	W10 x 26 #1	W10 x 30 #1	W14 x 34 #2	W16 x 36 #2	-	-	-	-	-	-	-	-	-	-	-
	16 ft	-	-	W8 x 24 #1	W10 x 26 #1	W10 x 30 #1	W12 x 30 #1	W16 x 36 #2	-	-	-	-	-	-	-	-	-	-	-	-
21 ft	7 ft	-	-	W6 x 12 #2	W6 x 15 #2	W6 x 15 #2	W6 x 16 #2S	W8 x 18 #2S	W10 x 22 #2	W10 x 22 #2	W10 x 26 #2	W12 x 26 #2	W16 x 31 #3	W18 x 35 #3	W21 x 44 #3	-	-	-	-	-
	8 ft	-	-	W6 x 15 #2	W6 x 15 #2	W6 x 15 #2	W8 x 18 #2	W8 x 21 #2S	W10 x 22 #2	W10 x 26 #2	W12 x 26 #2	W14 x 30 #2	W18 x 35 #3	W21 x 44 #3	-	-	-	-	-	-
	9 ft	-	-	W6 x 15 #2	W6 x 15 #2	W8 x 18 #2	W8 x 21 #2	W10 x 22 #2	W10 x 26 #2	W12 x 26 #2	W14 x 30 #2	W18 x 35 #3	W18 x 35 #3	W21 x 44 #3	-	-	-	-	-	-
	10 ft	-	-	W6 x 15 #2	W8 x 18 #2	W6 x 20 #1	W10 x 22 #2	W10 x 26 #2	W10 x 26 #2	W12 x 26 #2	W18 x 35 #3	W18 x 35 #3	W21 x 44 #3	-	-	-	-	-	-	-
	11 ft	-	-	W6 x 15 #1	W8 x 18 #2	W8 x 21 #2	W10 x 22 #2	W10 x 26 #2	W12 x 26 #2	W14 x 30 #2	W16 x 40 #2	W21 x 44 #3	-	-	-	-	-	-	-	-
	12 ft	-	-	W8 x 18 #2	W6 x 20 #1	W8 x 22 #2	W10 x 26 #2	W10 x 26 #2	W14 x 30 #2	W16 x 36 #2	W18 x 40 #2	W21 x 44 #3	-	-	-	-	-	-	-	-
	13 ft	-	-	W6 x 20 #1	W8 x 21 #1	W10 x 26 #2	W10 x 26 #2	W12 x 30 #2	W14 x 34 #2	W18 x 40 #2	W21 x 44 #3	-	-	-	-	-	-	-	-	-
	14 ft	-	-	W6 x 20 #1	W10 x 26 #2	W10 x 26 #1	W10 x 30 #1	W14 x 34 #2	W16 x 36 #2	-	-	-	-	-	-	-	-	-	-	-
	15 ft	-	-	W8 x 21 #1	W10 x 26 #1	W10 x 26 #1	W12 x 30 #2	W16 x 36 #2	-	-	-	-	-	-	-	-	-	-	-	-
	16 ft	-	-	W8 x 24 #1	W10 x 26 #1	W10 x 30 #1	W14 x 34 #2	W16 x 36 #2	-	-	-	-	-	-	-	-	-	-	-	-
22 ft	7 ft	-	-	W6 x 12 #2	W6 x 15 #2	W6 x 15 #2	W8 x 18 #2	W8 x 18 #2S	W10 x 22 #2	W10 x 22 #2	W12 x 26 #3	W16 x 26 #3	W16 x 31 #3	W18 x 35 #3	W21 x 44 #3	-	-	-	-	-
	8 ft	-	-	W6 x 15 #2	W6 x 15 #2	W6 x 15 #2	W8 x 18 #2	W10 x 22 #2	W10 x 22 #2	W10 x 26 #2	W12 x 26 #2	W16 x 31 #3	W18 x 35 #3	W21 x 44 #3	-	-	-	-	-	-
	9 ft	-	-	W6 x 15 #2	W6 x 15 #2	W8 x 18 #2	W8 x 21 #2	W10 x 22 #2	W10 x 26 #2	W12 x 26 #2	W14 x 30 #2	W18 x 35 #3	W21 x 44 #3	-	-	-	-	-	-	-
	10 ft	-	-	W6 x 15 #2	W8 x 18 #2	W8 x 21 #2	W10 x 22 #2	W10 x 26 #2	W12 x 26 #2	W14 x 30 #2	W18 x 35 #3	W21 x 44 #3	-	-	-	-	-	-	-	-
	11 ft	-	-	W6 x 16 #1	W6 x 20 #1	W8 x 21 #2	W10 x 26 #2	W10 x 26 #2	W12 x 26 #2	W18 x 35 #3	W18 x 40 #3	W21 x 44 #3	-	-	-	-	-	-	-	-
	12 ft	-	-	W8 x 18 #2	W8 x 21 #2	W10 x 22 #2	W10 x 26 #2	W12 x 26 #2	W14 x 30 #2	W18 x 40 #2	W21 x 44 #3	-	-	-	-	-	-	-	-	-
	13 ft	-	-	W6 x 20 #1	W8 x 21 #1	W10 x 26 #2	W10 x 26 #1	W12 x 30 #2	W16 x 36 #2	W18 x 40 #2	-	-	-	-	-	-	-	-	-	-
	14 ft	-	-	W6 x 20 #1	W10 x 26 #2	W10 x 26 #1	W12 x 30 #2	W14 x 34 #2	W18 x 40 #2	-	-	-	-	-	-	-	-	-	-	-
	15 ft	-	-	W10 x 22 #1	W10 x 26 #1	W10 x 30 #1	W12 x 30 #2	W16 x 36 #2	-	-	-	-	-	-	-	-	-	-	-	-
	16 ft	-	-	W10 x 26 #1	W10 x 26 #1	W10 x 30 #1	W14 x 34 #2	-	-	-	-	-	-	-	-	-	-	-	-	-

REV.	DATE	REVISION DESCRIPTION	SHEET NO.

THE INFORMATION, INCLUDING ESTIMATED QUANTITIES OF WORK, SHOWN ON THESE SHEETS IS BASED ON LIMITED INVESTIGATIONS BY THE STATE AND IS IN NO WAY WARRANTED TO INDICATE THE CONDITIONS OF ACTUAL QUANTITIES OF WORK WHICH WILL BE REQUIRED.

Plotted Date: 12/17/2012

DESIGNER/DRAFTER: BKC

CHECKED BY: JRH

SCALE AS NOTED

STATE OF CONNECTICUT
DEPARTMENT OF TRANSPORTATION

Filename: ...\SB_Breakaway_Signpost_BSM3_PostSelectionTable_2.dgn

SIGNATURE/ BLOCK:

OFFICE OF ENGINEERING

APPROVED BY:

PROJECT TITLE:

REPLACEMENT OF OVERHEAD SIGN SUPPORTS ON VARIOUS ROUTES STATEWIDE

TOWN: VARIOUS

DRAWING TITLE: BREAKAWAY SIGN SUPPORTS POST SELECTION TABLE 2

PROJECT NO. 170-3065

DRAWING NO. S-33

SHEET NO. 04.33

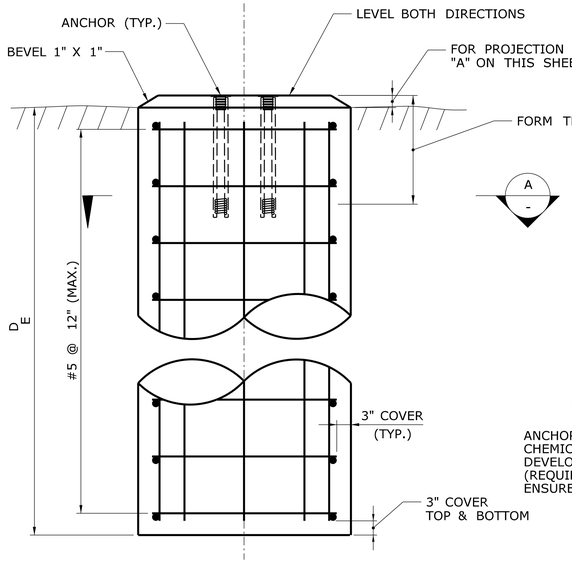

TYPICAL SECTION
SIGN SUPPORT FOUNDATION IN EARTH

SCALE: $\frac{3}{4}$" = 1'-0"

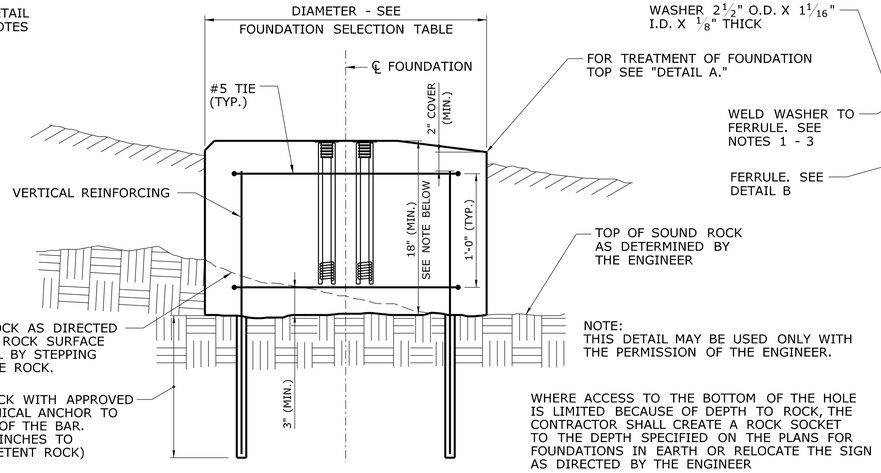

NOTE:
THIS DETAIL MAY BE USED ONLY WITH THE PERMISSION OF THE ENGINEER.

WHERE ACCESS TO THE BOTTOM OF THE HOLE IS LIMITED BECAUSE OF DEPTH TO ROCK, THE CONTRACTOR SHALL CREATE A ROCK SOCKET TO THE DEPTH SPECIFIED ON THE PLANS FOR FOUNDATIONS IN EARTH OR RELOCATE THE SIGN AS DIRECTED BY THE ENGINEER

TYPICAL SECTION SIGN
SUPPORT FOUNDATION IN ROCK

SCALE: $1\frac{1}{2}$" = 1'-0"

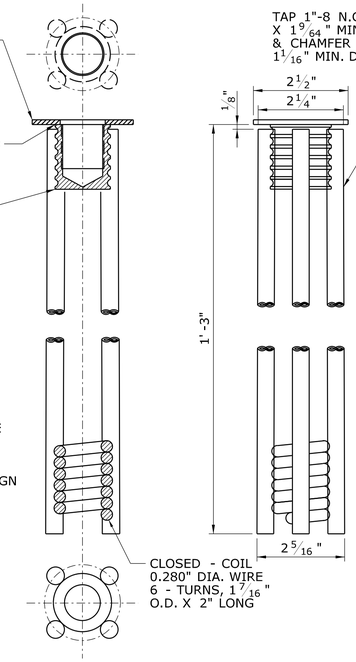

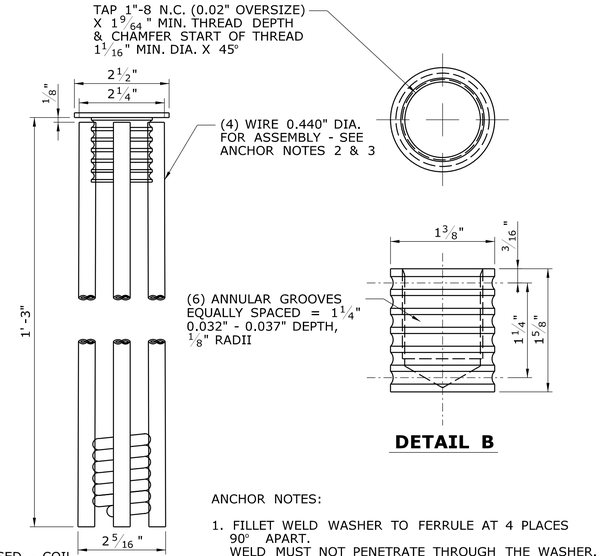

DETAIL B

ANCHOR NOTES:

1. FILLET WELD WASHER TO FERRULE AT 4 PLACES 90° APART. WELD MUST NOT PENETRATE THROUGH THE WASHER. WASHER MUST BE PERPENDICULAR TO THE FERRULE CENTER LINE.
2. WIRES (4) TO BE PERCUSSION WELDED TO FERRULE AND TO THE CLOSED COIL.
3. WELD MUST NOT PENETRATE TO FERRULE INTERIOR THREADS.
4. WIRE TO BE DRAWN PER ASTM A510.
5. CHEMICAL & PHYSICAL CERTIFICATION SHOULD ACCOMPANY THE MATERIAL.
6. CERTIFICATION SHOULD EXPLICITLY INDICATE THE MATERIAL TO BE DOMESTIC.
7. TOLERANCES ON DECIMAL DIMENSIONS SHALL BE ± 0.004". ALL OTHER TOLERANCES SHALL BE ± 0.04", EXCEPT AS NOTED.

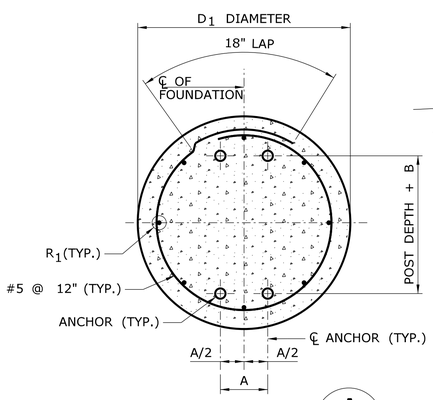

SECTION A - A
DRILLED FOUNDATION

SCALE: $\frac{3}{4}$" = 1'-0"

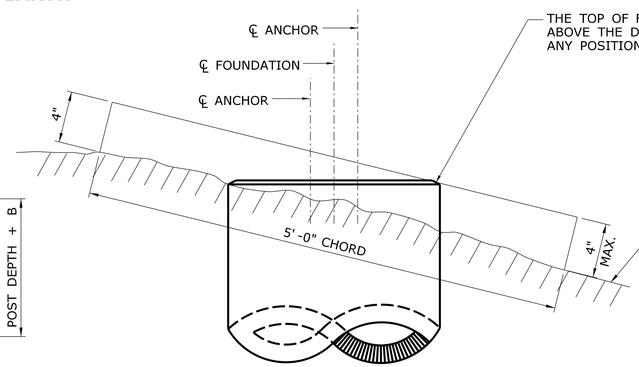

STANDARD FOUNDATION TOP

THE TOP OF FOUNDATION SHALL NOT PROJECT ABOVE THE DASHED LINE WHEN THE LINE IS IN ANY POSITION STRADDLING THE FOUNDATION

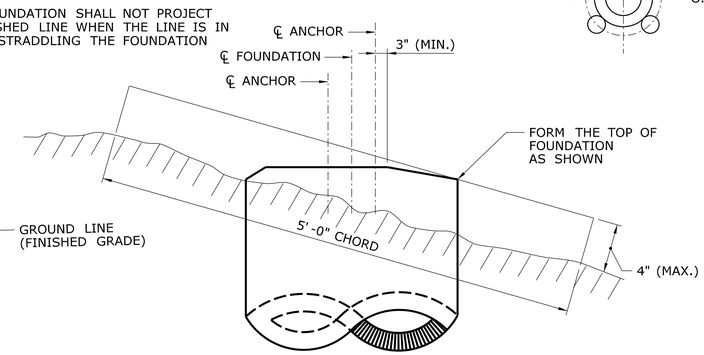

MODIFIED FOUNDATION TOP
(SEE FOUNDATION NOTE 3)

DETAIL A - PROJECTION OF FOUNDATION ABOVE GROUND

ERECTION NOTE:

FOR MAXIMUM EFFECTIVENESS AND TO ELIMINATE OR MINIMIZE SPECULAR GLARE, POSITION SIDE MOUNTED SIGNS AS FOLLOWS:

A. ON TANGENT SECTION, POSITION THE SIGN SUCH THAT THE VERTICAL AXIS IS PLUMB AND THE HORIZONTAL AXIS IS AT AN ANGLE OF 93° WITH THE TRAFFIC LANE WHICH THE SIGN SERVES (SEE DIAGRAM).

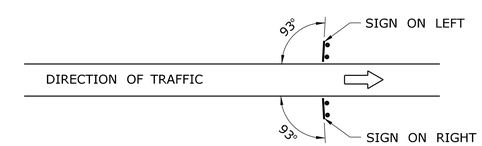

B. WHERE THE SIGN IS POSITIONED ON THE OUTSIDE OR INSIDE OF THE HORIZONTAL CURVE, THE SIGN FACE SHOULD BE ORIENTED 90° TO THE STRAIGHT LINE BETWEEN THE SIGN AND THE POINT FROM WHICH THE SIGN IS TO BE READ AT THE DISTANCE SHOWN.

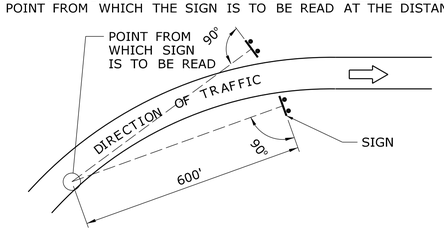

SIGN SUPPORT PLACEMENT DETAILS

SELECTING A FOUNDATION:

ENTER THE "FOUNDATION SELECTION TABLE" WITH THE POST SIZE AND BRACKET NO. SELECTED FROM THE "POST SELECTION TABLE 1 OR 2" ON S-32 OR S-33 READ HORIZONTALLY ACROSS THE TABLE THE CORRESPONDING VALUES OF FOUNDATION DIAMETER, EMBEDMENT DEPTH, REINFORCING BAR SIZE, ANCHOR SPACING AND DIMENSION "B".

FOUNDATION SELECTION TABLE FOR BREAKAWAY SIGNS

POST SIZE	DIAMETER D_I (FT.)	DEPTH D_E (FT.)	REINF. STEEL R_I	ANCHOR SPACING A (IN.)	B (IN.) BRACKET NO. 1	2	3
W6 W8	2.5	8	8 - #5	3	$7\frac{15}{16}$	$8\frac{1}{16}$	$8\frac{1}{8}$
W10 W12	2.5	8	8 - #5	4	$7\frac{15}{16}$	$8\frac{1}{16}$	$8\frac{1}{8}$
W14 W16 W18 W21	3.25	8	8 - #6	4	$7\frac{15}{16}$	$8\frac{1}{16}$	$8\frac{1}{8}$

FOUNDATION NOTES

1. DETAIL A ILLUSTRATES THE METHOD USED TO MEASURE THE PROJECTION OF THE FOUNDATION ABOVE FINISHED GRADE. IT IS IMPORTANT THAT THE TOP OF THE FOUNDATION BE PLACED IN ACCORDANCE WITH THIS DETAIL.
2. THE TOP OF FOUNDATION SHALL BE CONSTRUCTED AS CLOSE TO THE FINISHED GRADE AS POSSIBLE, BUT SHOULD NOT BE COVERED BY SOIL.
3. USE A MODIFIED TOP WHERE PROJECTION LIMITS CANNOT BE MET WITH THE STANDARD TOP.
4. FOUNDATIONS SHALL BE PLACED AGAINST UNDISTURBED SOIL. WHERE ROCK IS ENCOUNTERED, THE CONTRACTOR MAY USE THE "SIGN SUPPORT FOUNDATION IN ROCK" DETAIL SHOWN ON THIS SHEET WITH THE PERMISSION OF THE ENGINEER.
5. IF UNSUITABLE SOIL IS ENCOUNTERED DURING EXCAVATION, THE ENGINEER SHALL BE NOTIFIED. AN ALTERNATE FOUNDATION DESIGN MAY BE SUPPLIED BY THE ENGINEER, OR THE SIGN MAY BE RELOCATED.
6. PLACEMENT OF FOUNDATIONS SHALL BE IN ACCORDANCE WITH "SIGN SUPPORT PLACEMENT DETAILS" ON THIS SHEET.
7. WHERE FOUNDATIONS ARE PLACED ON SLOPES STEEPER THAN 1V : 6H, GRADE AROUND THE FOUNDATIONS IN CONFORMANCE WITH DETAIL A.

REV.	DATE	REVISION DESCRIPTION	SHEET NO.

THE INFORMATION, INCLUDING ESTIMATED QUANTITIES OF WORK, SHOWN ON THESE SHEETS IS BASED ON LIMITED INVESTIGATIONS BY THE STATE AND IS IN NO WAY WARRANTED TO INDICATE THE CONDITIONS OF ACTUAL QUANTITIES OF WORK WHICH WILL BE REQUIRED.

Plotted Date: 12/17/2012

DESIGNER/DRAFTER: BKC
CHECKED BY: JRH
SCALE AS NOTED

STATE OF CONNECTICUT
DEPARTMENT OF TRANSPORTATION

Filename: ...\SB_Breakaway_Signpost_BSM4_FoundationDet.dgn

SIGNATURE/BLOCK: OFFICE OF ENGINEERING
APPROVED BY:

PROJECT TITLE: REPLACEMENT OF OVERHEAD SIGN SUPPORTS ON VARIOUS ROUTES STATEWIDE

TOWN: VARIOUS

DRAWING TITLE: BREAKAWAY SIGN SUPPORTS FOUNDATION DETAILS

PROJECT NO. 170-3065
DRAWING NO. S-34
SHEET NO. 04.34

TABLE 1 - BRACKET DATA													
POST SIZE	BRACKET TYPE	BRACKET WEIGHT (LBS)	DIMENSIONS (IN.)			HOLE DIAMETERS (IN.)			DIMENSIONS (IN.)				
									E BRACKET NO.			F	G
			A	B	C	D1	D2	D3	1	2	3		
W6, W8	B525	$7\frac{5}{8}$	$5\frac{1}{4}$	$1\frac{1}{8}$	$1\frac{1}{2}$	$\frac{17}{32}$	$\frac{7}{16}$	$\frac{1}{2}$" -13 UNC 1A	0.100	0.150	0.200	$1\frac{7}{8}$	$\frac{1}{2}$
ALL OTHERS	B650	$9\frac{1}{2}$	$6\frac{1}{2}$	$1\frac{1}{8}$	2	$\frac{21}{32}$	$\frac{17}{32}$	$\frac{5}{8}$"-11 UNC 1A	0.100	0.150	0.200	$2\frac{7}{8}$	$\frac{1}{2}$

TABLE 2 - BRACKET BOLTS								
POST SIZE	BRACKET TYPE	BOLT AND CAP SCREW DIAMETER	BOLT LENTGH			CAP SCREW LENGTH	THREAD DESIGNATION (U.S. CUSTOMARY UNITS)	
			TOP	MIDDLE	BOTTOM		BOLT	CAP SCREW
W6, W8	B525	$\frac{1}{2}$	$2\frac{1}{2}$	$2\frac{3}{4}$	3	$1\frac{1}{4}$	13 UNC	13 UNC
ALL OTHERS	B650	$\frac{5}{8}$	$2\frac{3}{4}$	3	$3\frac{1}{4}$	$1\frac{1}{4}$	11 UNC	11 UNC

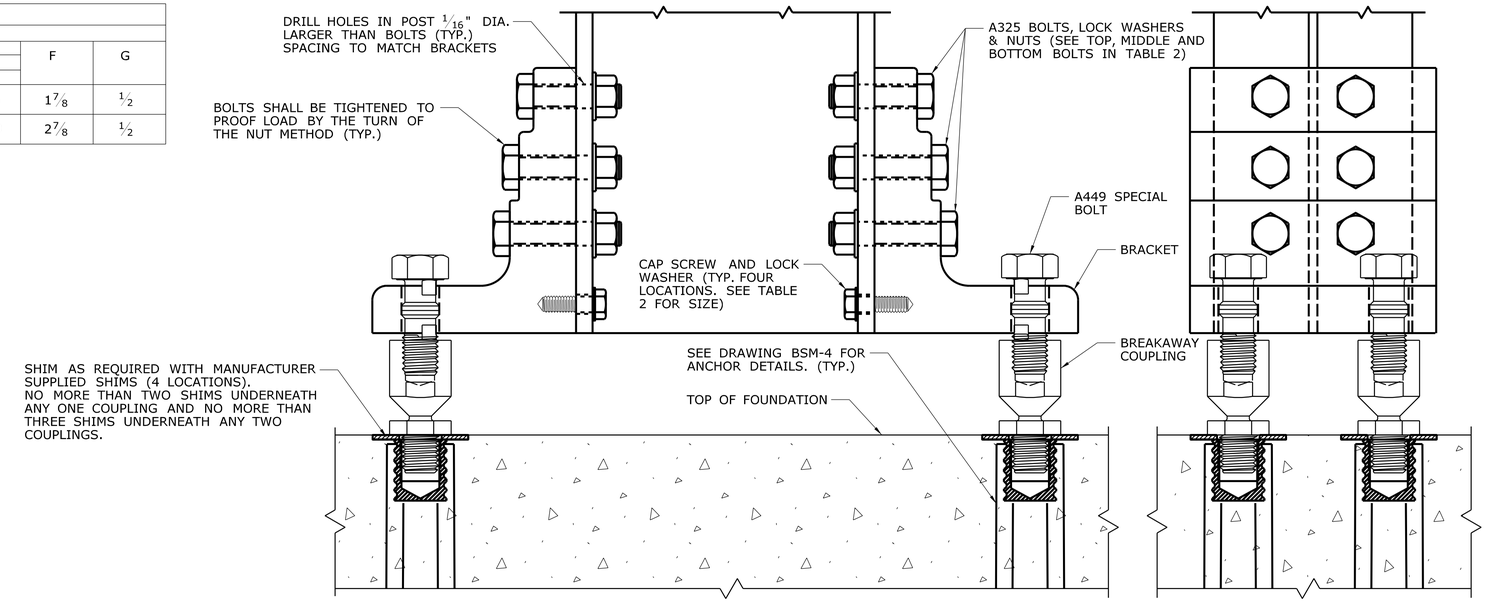

SIDE ELEVATION

FRONT ELEVATION

BRACKET ASSEMBLY DETAILS

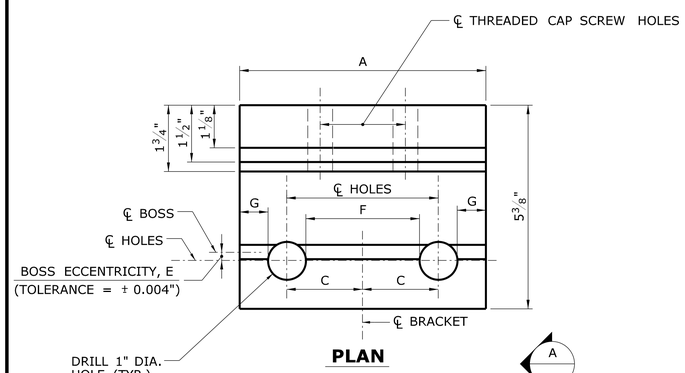

PLAN

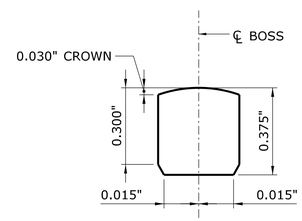

BOSS DETAIL

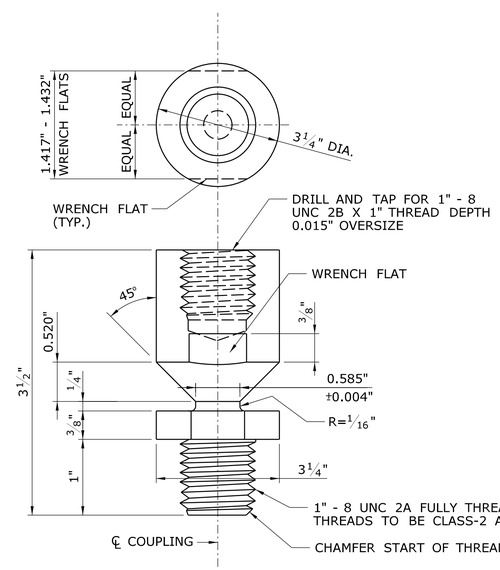

NOTE:
TOLERANCES TO $\frac{1}{32}$" EXCEPT AS NOTED

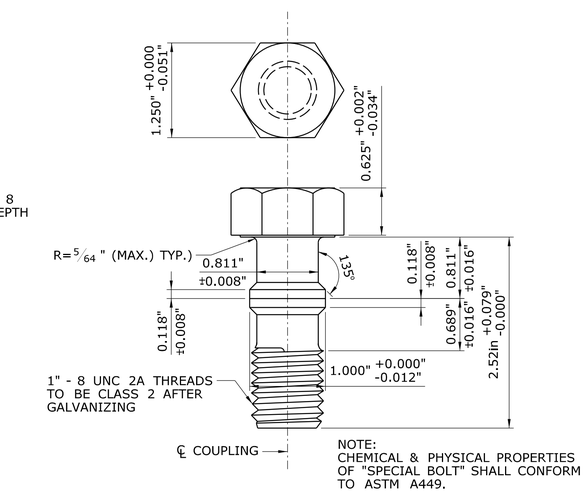

NOTE:
CHEMICAL & PHYSICAL PROPERTIES OF "SPECIAL BOLT" SHALL CONFORM TO ASTM A449.

SPECIAL BOLT

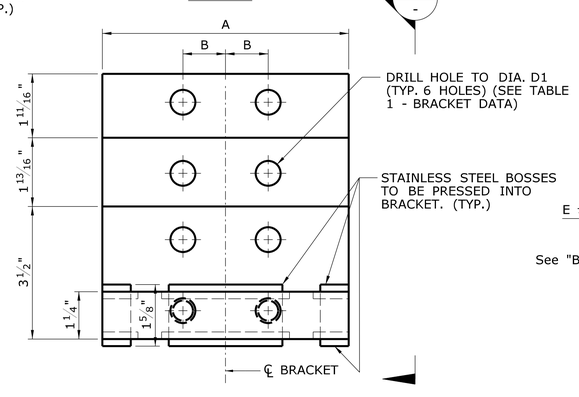

ELEVATION

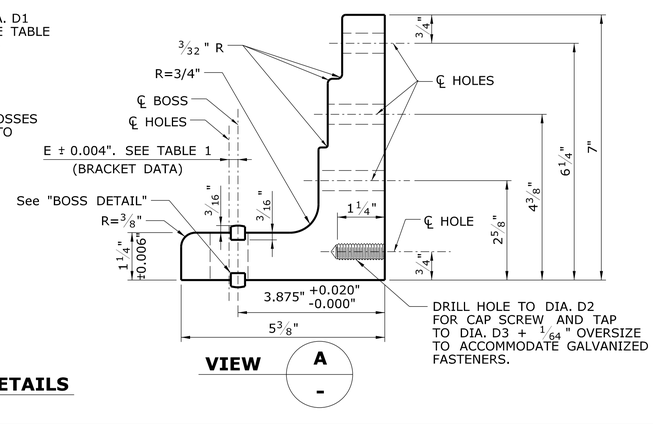

VIEW A

BRACKET DETAILS

HALF SCALE

REV.	DATE	REVISION DESCRIPTION	SHEET NO.

THE INFORMATION, INCLUDING ESTIMATED QUANTITIES OF WORK, SHOWN ON THESE SHEETS IS BASED ON LIMITED INVESTIGATIONS BY THE STATE AND IS IN NO WAY WARRANTED TO INDICATE THE CONDITIONS OF ACTUAL QUANTITIES OF WORK WHICH WILL BE REQUIRED.

Plotted Date: 12/17/2012

DESIGNER/DRAFTER: **BKC**

CHECKED BY: **JRH**

SCALE AS NOTED

STATE OF CONNECTICUT
DEPARTMENT OF TRANSPORTATION

Filename: ...\SB_Breakaway_Signpost_BSM5_BracketDet.dgn

SIGNATURE/ BLOCK: **OFFICE OF ENGINEERING**

APPROVED BY:

PROJECT TITLE: **REPLACEMENT OF OVERHEAD SIGN SUPPORTS ON VARIOUS ROUTES STATEWIDE**

TOWN: **VARIOUS**

DRAWING TITLE: **BREAKAWAY SIGN SUPPORTS BRACKET DETAILS**

PROJECT NO. **170-3065**

DRAWING NO. **S-35**

SHEET NO. **04.35**

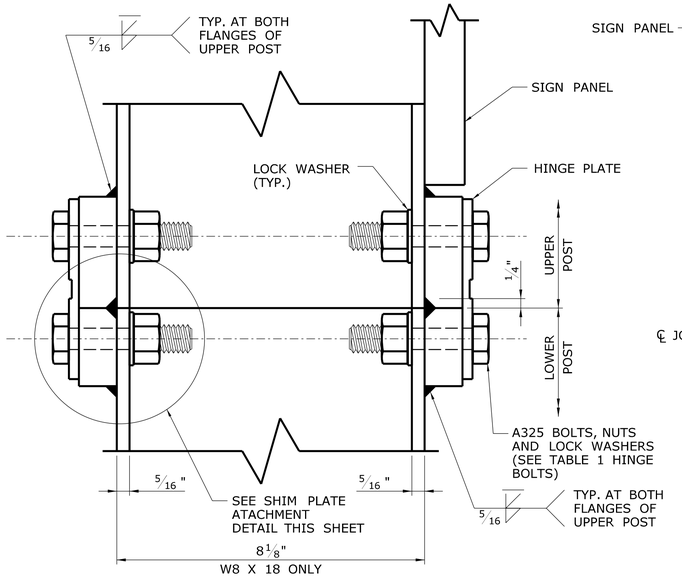

SIDE ELEVATION

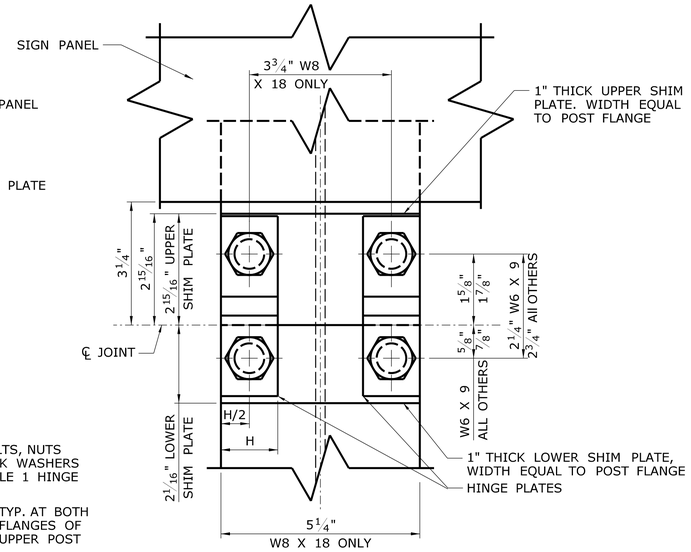

FRONT ELEVATION

WITH SHIM PLATE

SCALE: 1/2 (W8 X 18)

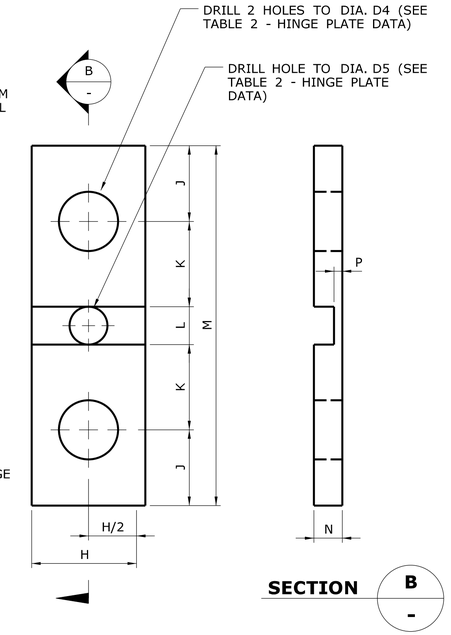

SECTION B - B

HINGE PLATE DETAILS

SCALE: FULL

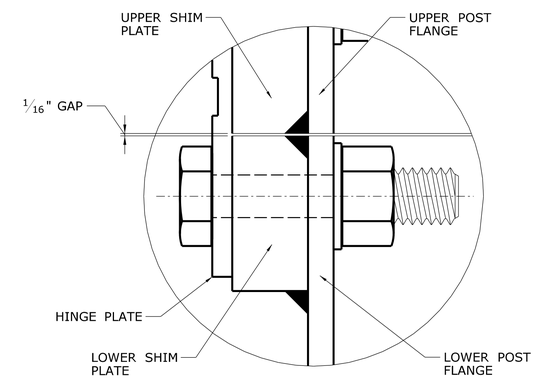

SHIM PLATE ATTACHMENT DETAILS

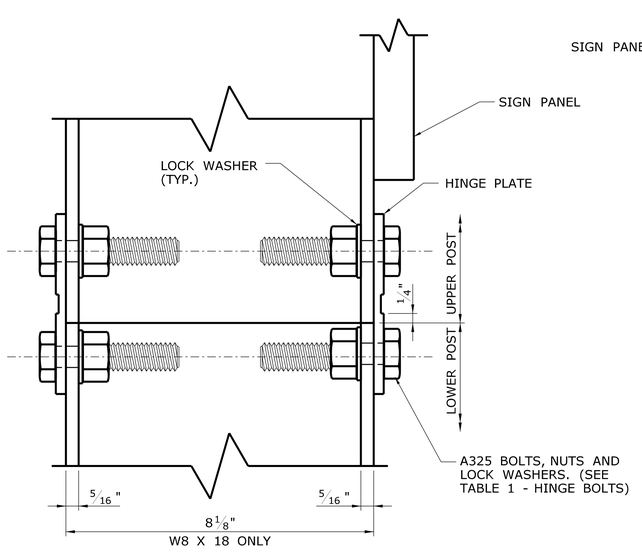

SIDE ELEVATION

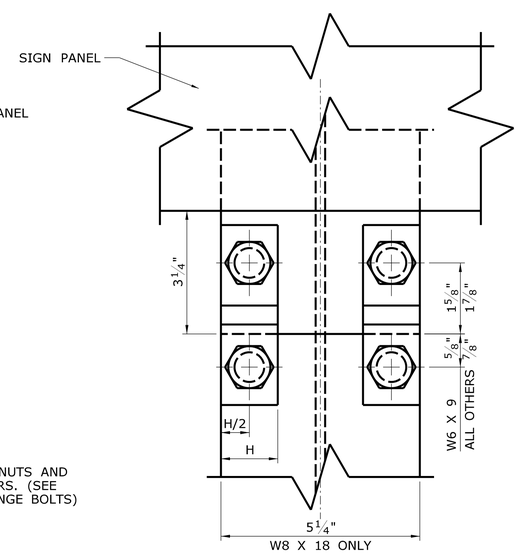

FRONT ELEVATION

WITHOUT SHIM PLATE

SCALE: 1/2 (W8 X 18)

TABLE 2 - HINGE PLATE DATA

POST SIZE	PLATE NO.	DIMENSIONS (IN.)							HOLE DIA. (IN.)	
		H	J	K	L	M	N	P	D4	D5
W6 X 9	1	1	3/4	7/8	1/2	3 3/4	15/64	0.071 ± 0.004	17/32	NONE
W6* AND W8	2	1 1/2	1	1 1/8	1/2	4 3/4	3/8	0.113 ± 0.004	25/32	1/2
ALL OTHERS	3	1 1/2	1	1 1/8	1/2	4 3/4	3/8	0.113 ± 0.004	25/32	NONE

* EXCLUDING W6 X 9

GENERAL NOTES

SPECIFICATIONS: CONNECTICUT DEPARTMENT OF TRANSPORTATION FORM 816 (2004), SUPPLEMENTAL SPECIFICATION DATED JULY 2012, AND SPECIAL PROVISIONS.
DESIGN SPECIFICATIONS: AASHTO STANDARD SPECIFICATIONS FOR HIGHWAY BRIDGES 17TH EDITION DATED 2002, AND AASHTO STANDARD SPECIFICATIONS FOR STRUCTURAL SUPPORTS FOR HIGHWAY SIGNS, LUMINAIRES AND TRAFFIC SIGNALS (2009) WITH THE LATEST INTERIM SPECIFICATIONS.
DESIGN LOADS: THE DESIGN WIND SPEED IS 100 MPH, BASED ON A 10-YEAR MEAN RECURRENCE INTERVAL.
MATERIALS:

FOUNDATIONS: CONCRETE FOR FOUNDATIONS SHALL BE CLASS "A" CONCRETE.

REINFORCEMENT: REINFORCING STEEL SHALL CONFORM TO THE REQUIREMENTS OF ASTM A615, GRADE 60.
SIGN POSTS: STEEL FOR SIGN POSTS SHALL CONFORM TO THE REQUIREMENTS OF ASTM A709, GRADE 36, AND SHALL BE HOT DIP GALVANIZED AFTER FABRICATION IN ACCORDANCE WITH ASTM A123. THE POST SHALL BE PERMANENTLY LABELED WITH THE POST SIZE ON THE WEB AT THE BOTTOM OF THE LOWER POST.
ANCHORS: THREADED FERRULES SHALL BE FABRICATED FROM TYPE 304 STAINLESS STEEL. RODS SHALL BE FABRICATED FROM STEEL CONFORMING TO AISI 1038. STEEL COILS SHALL CONFORM TO THE REQUIREMENTS OF AISI 1008. MINIMUM TENSILE STRENGTH OF 60,000 LBS.
SHIMS: 1" HORSESHOE SHIMS SHALL BE FABRICATED FROM 14 OR 18 GAUGE SHEET STEEL.

BREAKAWAY COUPLINGS: BREAKAWAY COUPLINGS SHALL BE MADE FROM ALLOY STEEL CONFORMING TO AMS 6378D WITH EXCEPTIONS TO DECARBURIZATION AND MACROSTRUCTURE CLAUSES OR AN EQUIVALENT MATERIAL, AND SHALL HAVE A MINIMUM TENSILE YIELD STRENGTH OF 130,000 PSI. THE COUPLING SHALL HAVE A MINIMUM TENSILE ULTIMATE STRENGTH OF 40,400 LBS. THE ROCKWELL HARDNESS SHALL BE C32 MINIMUM. COUPLINGS SHALL BE HOT DIP GALVANIZED IN ACCORDANCE WITH ASTM A153, CLEANED AND PHOSPHATED PER FEDERAL SPECIFICATION TT-C-490C, COATED, 0.002" - 0.004" THICK, USING MORTON POWDER COATINGS' 20-7037 BLACK POLYESTER POWDER OR EQUIVALENT.
CHIPPED AREAS OF THE COATED SURFACE SHALL BE REPAIRED. ALL THREADED SURFACES, AFTER COATING, SHALL BE CLEANED TO ALLOW THEM TO FUNCTION PROPERLY.

BRACKETS: BRACKETS SHALL BE MADE FROM ALUMINUM ALLOY 6061-T6 OR AN EQUIVALENT MATERIAL. THE LOAD CONCENTRATING MEMBER (BOSS) SHALL BE MADE FROM STAINLESS STEEL CONFORMING TO ASTM A582, TYPE 416 WITH ROCKWELL HARDNESS OF C33 - C45. LOCATION HOLES FOR THE BREAKAWAY COUPLING SHALL BE ACCURATELY POSITIONED RELATIVE TO THE LOAD CONCENTRATING MEMBER AND BRACKETS SHALL BE PERMANENTLY LABELED WITH THE BRACKET NUMBER TO REFLECT THE HOLE POSITIONING. SEE DWG. NO. S-35 FOR IDENTIFICATION OF BRACKETS BY NUMBER.

HINGE PLATES: HINGE PLATES SHALL BE MADE FROM ALLOY STEEL CONFORMING TO AISI 4130 OR AN EQUIVALENT MATERIAL AND SHALL BE GALVANIZED AFTER FABRICATION IN ACCORDANCE WITH ASTM A123. THE HINGE PLATE SHALL HAVE A MINIMUM TENSILE YIELD STRENGTH OF 90,000 PSI AND MINIMUM TENSILE ULTIMATE

STRENGTH AS FOLLOWS:
HI-1 7,100 LBS
HI-2 11,300 LBS
HI-3 17,000 LBS

BOLTS, NUTS AND WASHERS: UNLESS NOTED OTHERWISE, ALL BOLTS SHALL CONFORM TO THE REQUIREMENTS OF ASTM A325. SPECIAL BOLTS SHALL CONFORM TO ASTM A449. NUTS SHALL CONFORM TO THE REQUIREMENTS OF ASTM A563, GRADE DH. LOCKWASHERS SHALL CONFORM TO THE REQUIREMENTS OF ANSI B18-21-1. BOLTS, NUTS AND WASHERS SHALL BE GALVANIZED IN ACCORDANCE WITH THE REQUIREMENTS OF ASTM A153. SPECIAL BOLTS MAY BE MECHANICALLY GALVANIZED IN ACCORDANCE WITH THE REQUIREMENTS OF ASTM B695, CLASS 50.

CAP SCREWS: CAP SCREWS ATTACHING BRACKETS TO POSTS SHALL CONFORM TO THE REQUIREMENTS OF ASTM A307 AND SHALL BE HOT DIP GALVANIZED IN ACCORDANCE WITH ASTM A153.

BREAKAWAY HARDWARE: BREAKAWAY HARDWARE SHALL BE SUPPLIED AS COMPONENTS OF A CRASH-TESTED SYSTEM COMPLYING WITH THE GUIDELINES OF NCHRP REPORT 350 (RECOMMENDED PROCEDURES FOR THE SAFETY PERFORMANCE EVALUATION OF HIGHWAY FEATURES). THE MANUFACTURER SHALL SUBMIT TEST REPORTS TO FHWA FOR APPROVAL.

CERTIFICATION: THE CONTRACTOR SHALL PROVIDE A MATERIALS CERTIFICATE TO CERTIFY THAT THE MATERIAL AND COMPONENTS CONFORM TO THOSE SHOWN ON THE PLANS AND SPECIFICATIONS.

CHANGES: NO CHANGE IN DESIGN MATERIALS OR DETAIL ALTERATIONS WILL BE PERMITTED WITHOUT PRIOR APPROVAL BY THE ENGINEER.

INSTALLATION: INSTALLATION OF THE BREAKAWAY ASSEMBLY SHALL BE IN ACCORDANCE WITH THE RECOMMENDED PRACTICES OF THE SUPPLIER.

BASIS OF PAYMENT: THE COST OF FURNISHING AND INSTALLING THE BREAKAWAY HINGE PLATE ASSEMBLY WILL BE INCLUDED IN THE PAY ITEM "STRUCTURAL STEEL SIGN SUPPORTS." THE COST OF FURNISHING AND INSTALLING THE BREAKAWAY COUPLING SYSTEM, CONSISTING OF BRACKET, BREAKAWAY COUPLINGS, SPECIAL BOLTS, AND SHIMS WILL BE INCLUDED IN THE PAY ITEM "SIDE MOUNTED SIGN FOUNDATION." THE COST OF FURNISHING AND INSTALLING FOUNDATIONS, INCLUDING EXCAVATING, CLASS "A" CONCRETE, REINFORCING STEEL AND ANCHOR FERRULES, WILL BE INCLUDED IN THE PAY ITEM "SIDE MOUNTED SIGN FOUNDATION."

TABLE 1 - HINGE BOLTS

POST SIZE	HINGE ASSEMBLY		THREAD DESIGNATION (U.S. CUSTOMARY UNITS)
	BOLT DIAMETER	BOLT LENGTH	
W6 x 9	1/2	1 1/2	13 UNC
ALL OTHERS	3/4	2 1/4	10 UNC

REV.	DATE	REVISION DESCRIPTION	SHEET NO.

THE INFORMATION, INCLUDING ESTIMATED QUANTITIES OF WORK, SHOWN ON THESE SHEETS IS BASED ON LIMITED INVESTIGATIONS BY THE STATE AND IS IN NO WAY WARRANTED TO INDICATE THE CONDITIONS OF ACTUAL QUANTITIES OF WORK WHICH WILL BE REQUIRED.

Plotted Date: 12/17/2012

DESIGNER/DRAFTER: BKC
CHECKED BY: JRH
SCALE AS NOTED

STATE OF CONNECTICUT
DEPARTMENT OF TRANSPORTATION

Filename: ...\SB_Breakaway_Signpost_BSM6_HingeDet.dgn

SIGNATURE/BLOCK:
OFFICE OF ENGINEERING
APPROVED BY:

PROJECT TITLE:
REPLACEMENT OF OVERHEAD SIGN SUPPORTS ON VARIOUS ROUTES STATEWIDE

TOWN: VARIOUS

DRAWING TITLE:
BREAKAWAY SIGN SUPPORTS HINGE DETAILS

PROJECT NO. 170-3065
DRAWING NO. S-36
SHEET NO. 04.36