F.H.W.A. REGION NO.	STATE	TOWN	FED. AID PROJ. NO.	PROJ. NO.	YEAR	ROUTE NO.	SHEET NO.	TOTAL SHEETS
1	CONN.	GREENWICH	N/A	9056-0055	2013	T.R.	1	29

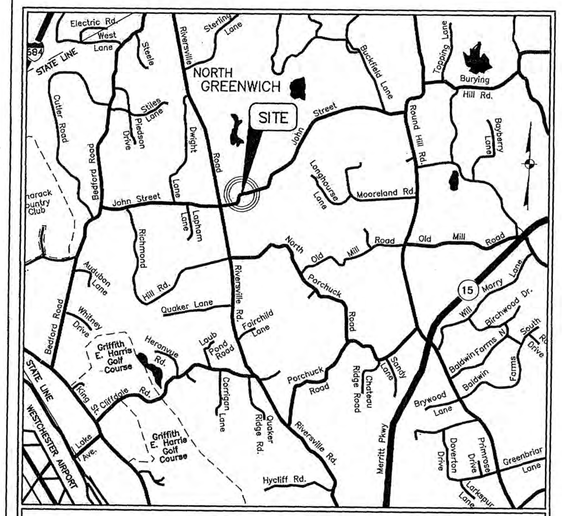

LOCATION PLAN

1000 0 1000 2000 3000

SCALE: 1" = 1000'

TOWN OF GREENWICH PLAN

FOR

REPLACEMENT OF BRIDGE NO. 056055 JOHN STREET OVER EAST BRANCH BYRAM RIVER

IN THE TOWN OF

GREENWICH

FROM STA. 14+50.00 TO STA. 20+00.00

LENGTH= 550.00 FT

DESIGN SCALES
- PLAN 1 IN.= 20 FT.
- PROFILE HOR. 1 IN.= 40 FT. VERT.1 IN .= 4 FT.
- CROSS SECTIONS 1 IN. = 4 FT.

OTHER SCALES AS NOTED

TO BE MAINTAINED BY TOWN OF GREENWICH

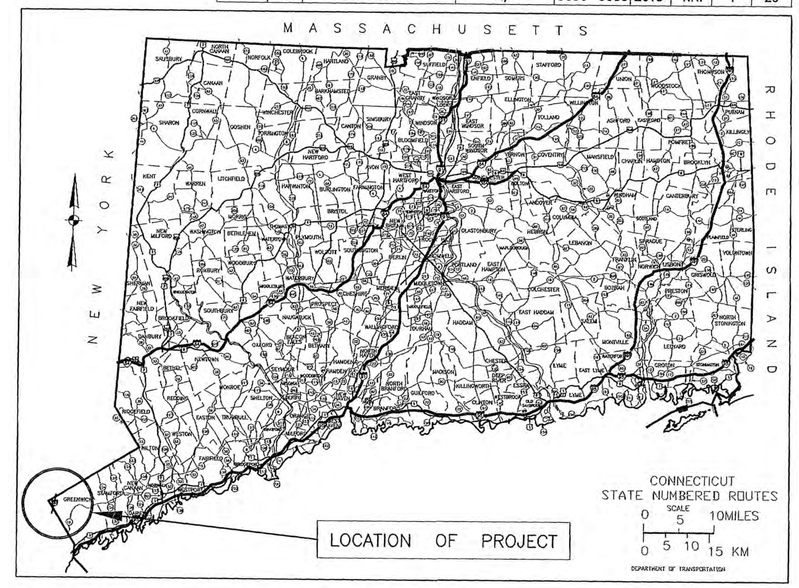

2004 SPECIFICATIONS FORM 816 GOVERN, INCLUDING SUPPLEMENT THERE TO DATED JANUARY 2009.

ALL ELEVATIONS ON THIS PROJECT BASED ON N.G.V.D. 1929

HORIZONTAL CONTROL BASED ON ASSUMED COORDINATE GRID N.A.D. 1927

TOWN NO. 56

PROJECT NO.

CONNECTICUT DEPARTMENT OF TRANSPORTATION BIDDING AND OTHER INFORMATION AND DOCUMENTS WHICH ARE OBTAINED THROUGH THE INTERNET, WORLD WIDE WEB SITES OR OTHER SOURCES ARE NOT TO BE CONSTRUED TO BE OFFICIAL INFORMATION FOR THE PURPOSES OF BIDDING OR CONDUCTING OTHER BUSINESS WITH THE DEPARTMENT.

IT IS THE RESPONSIBILITY OF EACH BIDDER AND ALL OTHER INTERESTED PARTIES TO OBTAIN ALL BIDDING RELATED INFORMATION AND DOCUMENTS FROM OFFICIAL SOURCES WITHIN THE DEPARTMENT.

PERSONS AND/OR ENTITIES WHICH REPRODUCE AND/OR MAKE SUCH INFORMATION AVAILABLE BY ANY MEANS ARE NOT AUTHORIZED BY THE DEPARTMENT TO DO SO AND MAY BE LIABLE FOR CLAIMS RESULTING FROM THE DISSEMINATION OF UNOFFICIAL, INCOMPLETE AND/OR INACCURATE INFORMATION.

LIST OF DRAWING REVISIONS

SHEET NO.	DESCRIPTION	DATE	BY

STANDARD CONVENTIONS

North Arrow W/No. Coor. — Grid Arrow

Edge Of Road
Concrete Pavement
Dirt Road
B.C.I.C.
Granite Curb
Guide Rail
Concrete Median Barrier
Bit. Walk
Conc. Sidewalk
Railroad Tracks
Chain Link Fence
Rustic Fence
Pipe Fence
Board Fence
Water Edge
Stream
Ditch
TOWN LINE
Limit Of Marsh
Stone Wall
Ledge Outcrop
Inland Wetland Limits
STATE LINE
Power Line
Swamp
Building
Transmission Tower
Riprap
Hedge Row
Tree Line
Shrub
Evergreen Tree
Deciduous Tree
Retaining Wall
Highway Line
Street Line
Property Line
Lot Line
Easement Line

LIST OF DRAWINGS

SHEET NO.	TITLE	SHEET NO.	STANDARD DRAWINGS	F.HW.A. APPRO. DATE
1	TITLE SHEET			
2	TYPICAL SECTIONS			
3–8	MISCELLANEOUS DETAILS			
9	SEDIMENTATION AND EROSION CONTROL PLAN			
10	ROADWAY PLAN			
11	ROADWAY PROFILE			
12	GRADING PLAN			
13	MAINTENANCE AND PROTECTION OF TRAFFIC			
14–19	ROADWAY CROSS SECTIONS			
	STRUCTURE SHEETS 20–29 (BRIDGE #056055)			
20	GENERAL PLAN 1			
21	GENERAL PLAN 2			
22	BORING LOGS			
23	FOOTING PLAN			
24	WINGWALL DETAILS			
25	FRAMING PLAN & DETAILS			
26	PRECAST CONCRETE FRAMES			
27	BRIDGE DETAILS			
28	GUIDERAIL ATTACHMENT			
29	PAYMENT LIMITS			

DESIGN SPEED: 35 mph
ROADWAY CLASSIFICATION: COLLECTOR
ADT: 2000 (YEAR 2020)

SHEETS DESIGNED BY:
FUSS & O'NEILL INC.
DATE 1-30-2013

CT P.E. LICENSE No. 14313

STATE OF CONNECTICUT — STUART H. HARNEY — No. 14313 — LICENSED PROFESSIONAL ENGINEER

REVIEWED BY THE TOWN OF GREENWICH

NAME

CHIEF ENGINEER DATE 1-31-13
TITLE

F.H.W.A. REGION NO.	STATE	TOWN	FED. AID PROJ. NO.	PROJ. NO.	YEAR	ROUTE NO.	SHEET NO.	TOTAL SHEETS
1	CONN.	GREENWICH	N/A	9056-0055	2013	T.R.	2	29

REPLACEMENT OF JOHN STREET BRIDGE OVER EAST BRANCH BYRAM RIVER

TYPICAL SECTIONS

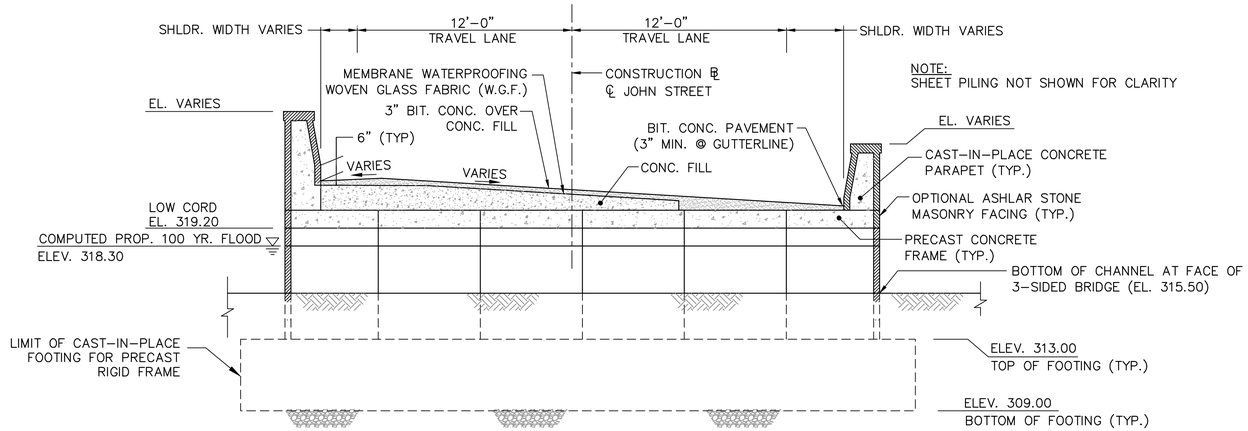

TYPICAL SECTION FROM STA. 17+27± TO STA. 17+56±

N.T.S.

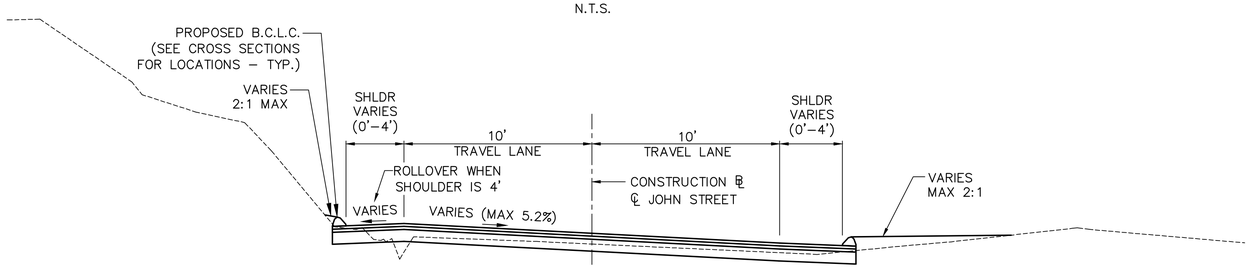

TYPICAL SECTION FROM STA. 14+51.3 TO STA. 17+27± AND FROM STA. 17+56± TO STA. 18+77.4

N.T.S.

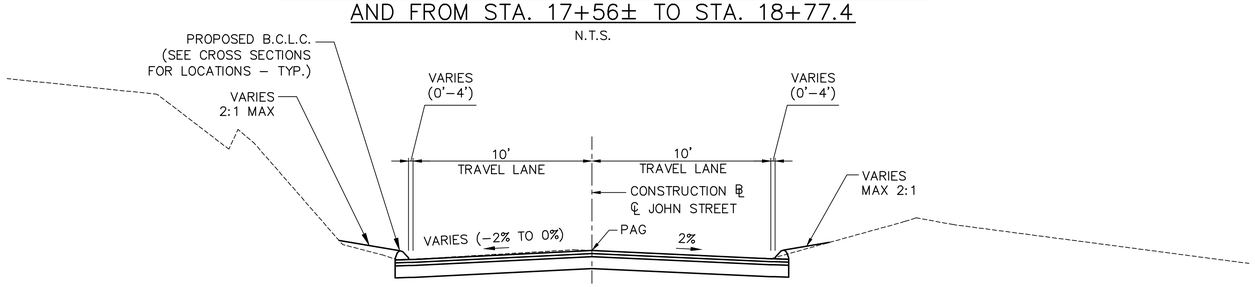

TYPICAL SECTION FROM STA. 14+50 TO STA. 14+51.3 AND FROM 18+77.4 TO 20+00

N.T.S.

ROADWAY PAVEMENT NOTES:

PAVEMENT STRUCTURE:	2"	BITUMINOUS CONCRETE (HMA S0.5) WEARING COURSE
	2"	BITUMINOUS CONCRETE (HMA S.375) BASE COURSE
	8"	PROCESSED AGGREGATE BASE

BRIDGE PAVEMENT NOTES:

PAVEMENT STRUCTURE:	2"	BITUMINOUS CONCRETE (HMA S0.5) WEARING COURSE
	VARIES (1" MIN.)	BITUMINOUS CONCRETE (HMA S.375) BASE COURSE

CURBING NOTES:

6" BITUMINOUS CONCRETE LIP CURBING (B.C.L.C.) WEST OF BRIDGE TO MATCH EXISTING.

SLOPE TREATMENT:

PROPOSED GRADING: 2V:1H SLOPES TO MATCH INTO EXISTING. (LOAM AND SEED TO LIMITS OF DISTURBANCE.)

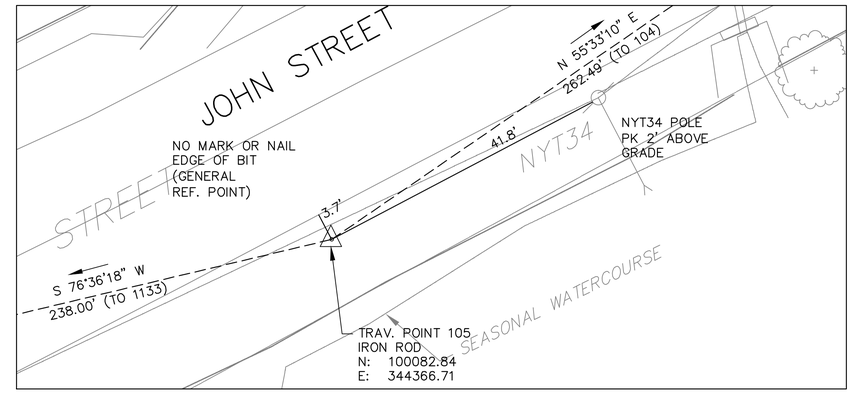

TRAVERSE TIE 105

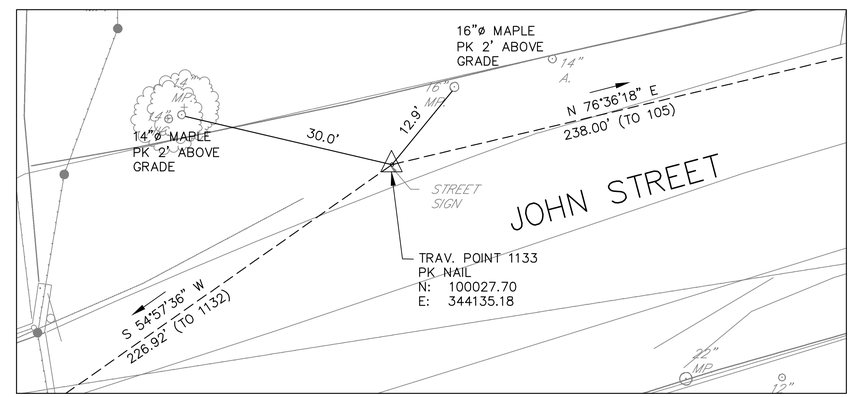

TRAVERSE TIE 1133

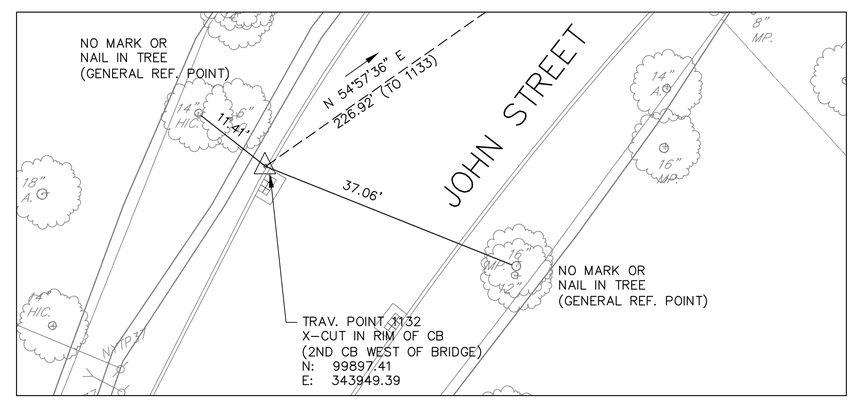

TRAVERSE TIE 1132

TRAVERSE TIES

REVISIONS			
NO.	DATE	DESCRIPTION	REV. SHEET NO.

PLAN	BY	DATE	CHECKED BY	DATE
Surveyed				
Plotted				
Traced				
Designed				
New Const. Noted				
Top Field Chk. Noted				
NOTEBOOK NO.				

F.H.W.A. REGION NO.	STATE	TOWN	FED. AID PROJ. NO.	PROJ. NO.	YEAR	ROUTE NO.	SHEET NO.	TOTAL SHEETS
1	CONN.	GREENWICH	N/A	9056–0055	2013	T.R.	3	29

REPLACEMENT OF JOHN STREET BRIDGE OVER EAST BRANCH BYRAM RIVER
MISCELLANEOUS DETAILS

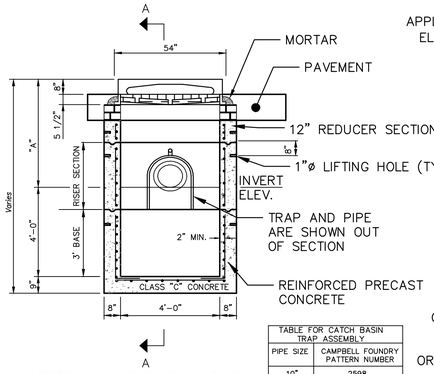

SECTIONAL ELEVATION B–B

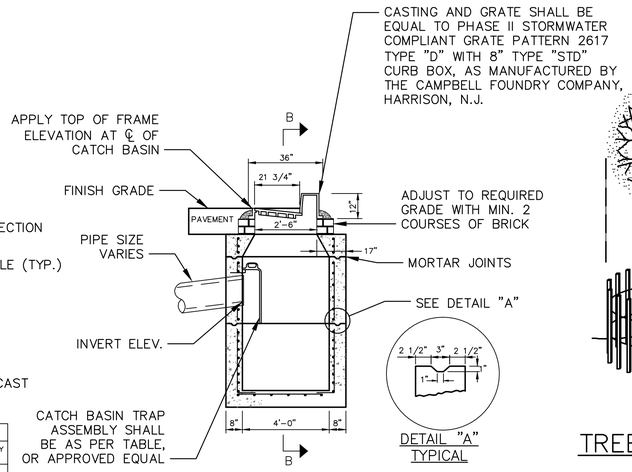

SECTIONAL ELEVATION A–A

TABLE FOR CATCH BASIN TRAP ASSEMBLY	
PIPE SIZE	CAMPBELL FOUNDRY PATTERN NUMBER
10"	2598
12"	2573
15"	2574
18"	2565
21"	2566

NOTES:
1. DIMENSION "A" SHALL BE CONSISTENT WITH INVERT ELEVATION SHOWN ON DRAWING. WHEN NO INVERT ELEVATION IS SPECIFIED DIMENSION "A" SHALL BE SUCH AS TO PROVIDE MINIMUM 2'–6" COVER OVER PIPE.
2. INCREASE WALL THICKNESS TO 12" FOR THOSE PORTIONS OF WALL AT DEPTH GREATER THAN 8 FEET. INSIDE DIMENSIONS TO REMAIN THE SAME, FOOTING SIZE TO BE INCREASED 8"

CATCH BASIN – TYPE C–1
(TOWN STANDARD DETAIL)
N.T.S.

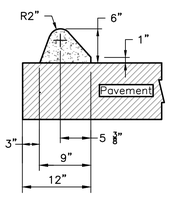

BITUMINOUS CONCRETE BERM
(TOWN STANDARD DETAIL)
N.T.S.

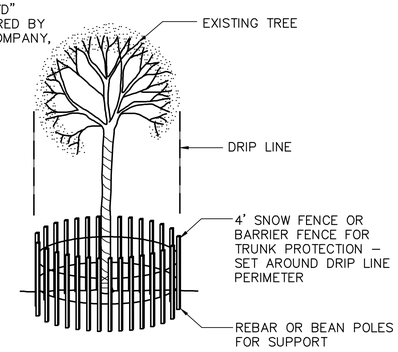

TREE PROTECTION DETAIL
SCALE: N.T.S.

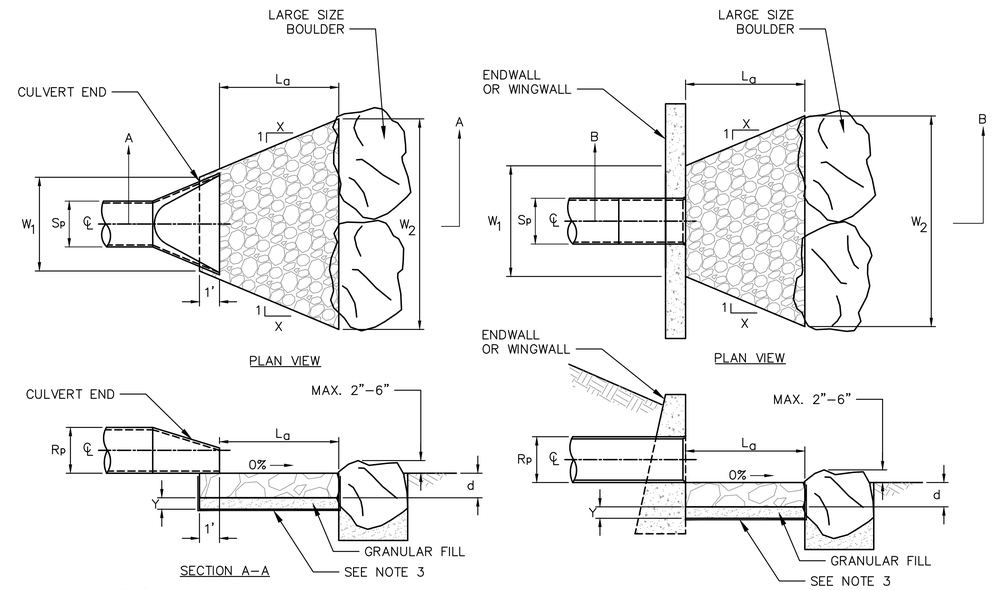

LEGEND

Sp = { MAX. INSIDE PIPE SPAN (NON–CIRCULAR SECTIONS) / INSIDE PIPE DIAMETER (CIRCULAR SECTIONS)

Rp = { MAX. INSIDE PIPE RISE (NON–CIRCULAR SECTIONS) / INSIDE PIPE DIAMETER (CIRCULAR SECTIONS)

La = { LENGTH OF RIPRAP MEASURED FROM THE END OF THE CULVERT END SECTION.

d = { 12" – MODIFIED RIPRAP / 18" – INTERMEDIATE RIPRAP / 36" – STANDARD RIPRAP / 42" – HEAVY RIPRAP

OUTLET ID	APRON TYPE	X	W_1	W_2	L_a	Y	RIPRAP TYPE
JOHN ST – 17+22R	B	0	9.0'	9.0'	7'±	6"	HEAVY
JOHN ST – 17+53R	B	0	7.5'	7.5'±	10'±	6"	HEAVY

NOTES:
1. DIMENSIONS OF THE RIPRAP APRONS DO NOT FOLLOW APRON DIMENSION DICTATED BY DRAINAGE MANUAL, RATHER THEY ARE DICTATED BY SITE CONDITIONS OF THE RIVER BANK AND THE BRIDGE.
2. LARGE SIZED BOULDERS SHALL BE PLACED ALONG EXISTING EDGE OF RIVER BANK AND W_2. THE SIZE OF THE BOULDER SHALL BE APPROXIMATELY 2'X3' AND 2' HIGH. THE BOULDER SHALL BE IMBEDDED, AND PLACED ON 12" OF GRANULAR FILL. BOULDER INSTALLATION SHALL BE COORDINATED WITH DEEP FISHERIES.
3. FOR HEAVY RIPRAP, GEOTEXTILE EROSION CONTROL CLASS A SHALL BE PLACED UNDER THE GRANULAR FILL.

RIPRAP APRON – TYPE A & B
N.T.S.

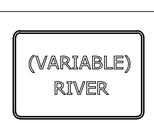

VARIABLE: RIVER, BROOK, CREEK

W1-8 (LEFT OR RIGHT)

W1-5

AREA (SQ. FT)	SIZE (INCHES)	CONN. D.O.T. #	POSTS	ALUM. THK.	AREA (SQ. FT)	SIZE (INCHES)	CONN. D.O.T. #	POSTS	ALUM. THK.	AREA (SQ. FT)	SIZE (INCHES)	CONN. D.O.T. #	POSTS	ALUM. THK.
					1.50	12X18	41-4202	1	.080	6.25	30	41-4114	1	.080
1.50	18X12	51-2009	1	.080	5.00	24X30	41-4203	1	.080	9.00	36	41-4124	1	.080
12.00	48X36	51-2051	2	.100	7.50	30X36	41-4204	1	.080	16.00	48	41-4174	2	.100

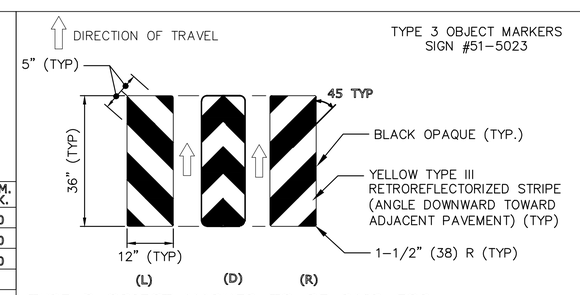

TYPE 3 OBJECT MARKER TO BE PAID FOR UNDER SECTION 12.08 SIGN FACE SHEET ALUMINUM

NOTES:
1. SIGN #51–5023 MARKER MOUNTED ON 3 LB. (4.5 KG/M) METAL SIGN POST
2. BOTTOM OF SIGN #51–5023 TO BE 4'–0" (1.2 M) ABOVE ADJACENT EDGE OF PAVEMENT
3. FINAL LOCATIONS OF SIGN #51–5023 MARKERS WILL BE AS SHOWN ON THE PLAN OR AS DIRECTED BY THE ENGINEER

HIGHWAY SIGNING
N.T.S.

REVISIONS			
NO.	DATE	DESCRIPTION	REV. SHEET NO.

PLAN	DATE	BY	DATE	CHECKED BY	DATE
Surveyed					
Platted					
Traced					
Designed					
New Const. Noted					
Top Field Chk. Noted					
NOTEBOOK NO.					

F.H.W.A. REGION NO.	STATE	TOWN	FED. AID PROJ. NO.	PROJ. NO.	YEAR	ROUTE NO.	SHEET NO.	TOTAL SHEETS
1	CONN.	GREENWICH	N/A	9056-0055	2013	T.R.	4	29

REPLACEMENT OF JOHN STREET BRIDGE OVER EAST BRANCH BYRAM RIVER

MISCELLANEOUS DETAILS

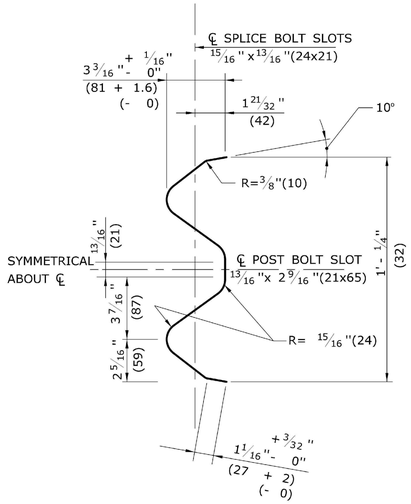

SELECTION THRU RAIL ELEMENT END VIEW

NOTE: ALL DIMENSIONS SUBJECT TO MANUFACTURING TOLERANCES

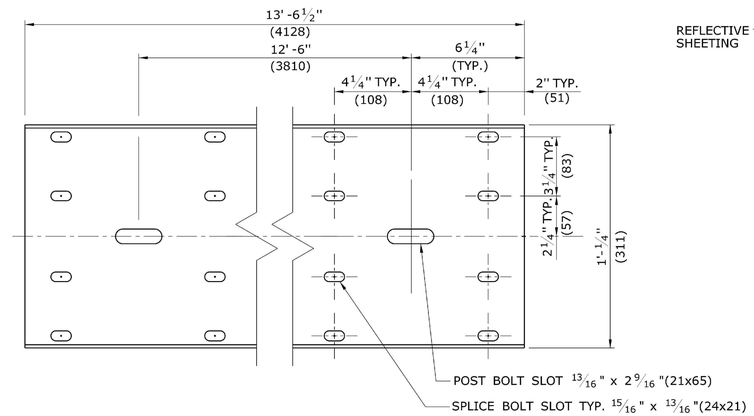

TYPICAL W-BEAM RAIL ELEMENT CLASS A, TYPE II

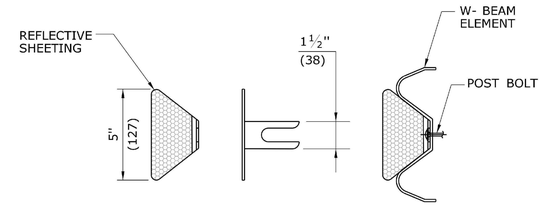

DELINEATOR DETAIL

GENERAL NOTES:

1. NEW R-B 350 GUIDERAIL INCLUDING SYSTEMS, ANCHORS AND TRANSITIONS INSTALLED ON EXPRESSWAYS AND RAMPS SHALL USE CLASS B TYPE II (10 GAUGE) W-BEAM RAIL ELEMENTS.
2. W6x9 (W150x14) POSTS MAY BE USED IN PLACE OF W6 x 8.5(W150x13) POSTS.
3. W8x13 (W200x19) POSTS, 7'-6"(2286) LONG, ARE USED WITH TRANSITIONS TO VERTICAL OR SAFETY SHAPE PARAPETS (POSTS 1 AND 2) AND SYSTEM 6.
4. W6x8.5 (W150x13) POSTS, 6'-0"(1829) LONG, ARE USED WITH TRANSITIONS TO VERTICAL OR SAFETY SHAPE PARAPETS (POSTS 3 THOUGH 6), MD-B 350, SYSTEM 5 & 5A, AND STANDARD R-B 350 GUIDERAIL.

DELINEATOR NOTES:

1. DELINEATORS SHALL BE FORMED OF .080 POLY-CARBONATE OR .080 SHEET ALUMINUM IN ACCORDANCE WITH M.18.13.
2. REFLECTIVE SHEETING SHALL CONFORM TO M.18.09.2.
3. DELINEATORS SHALL BE INSTALLED ON THE POST CLOSEST TO THE DESIGNATED SPACING.
4. REFLECTIVE SHEETING SHALL BE WHITE EXCEPT ON THE LEFT SIDE OF DIVIDED STREETS, HIGHWAYS, RAMPS, AND ONE WAY ROADS IN THE DIRECTION OF TRAVEL WHERE IT SHALL BE YELLOW.
5. INSTALL DELINEATORS ON RAIL THAT IS PARALLEL TO AND NOT GREATER THAN 6'(1829) FROM THE EDGE OF THE ROADWAY. A MINIMUM OF THREE DELINEATORS MUST BE INSTALLED ON ANY RUN OF RAIL.

DELINEATOR SPACING:
RADIUS ≥ 300'(91440) - SPACE EVERY 50'(15.24m)
RADIUS < 300'(91440) - SPACE EVERY 25'(7.62m)

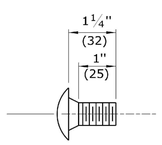

W-BEAM SPLICE BOLT DETAIL

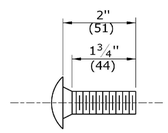

POST BOLT DETAIL FOR R-B 350 SYSTEM 6 RUBRAIL

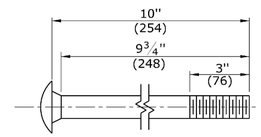

POST BOLT DETAIL FOR R-B 350 AND MD-B 350 GUIDERAIL

(UNTHREADED PORTION NOT TO EXCEED 6 3/4"(171))

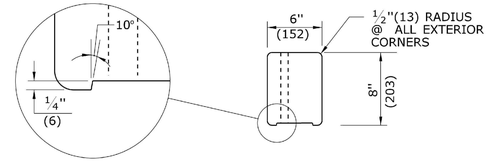

PLAN

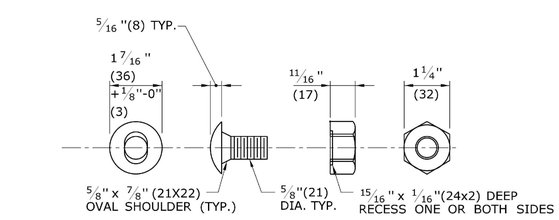

BUTTONHEAD BOLT **HEX NUT**

NOTE: AFTER GALVANIZING, THE NUT SHALL BE FREE RUNNING ON THE BOLT. DIAMETER SHOWN IS TYPICAL FOR ALL GUIDERAIL BOLTS. SEE DETAILS ABOVE FOR SPECIFIC LENGTHS.

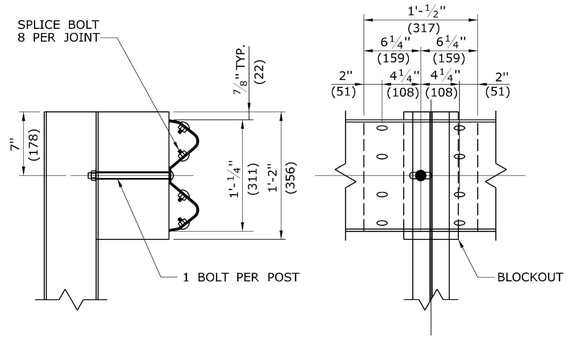

SECTION **ELEVATION**

LAP DETAIL

NOTE:
LAP RAIL SECTION IN DIRECTION OF TRAFFIC

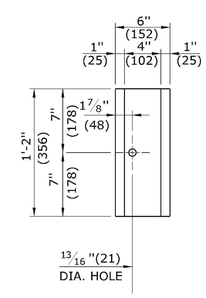

ELEVATION

R-B 350 PLASTIC BLOCKOUT DETAIL

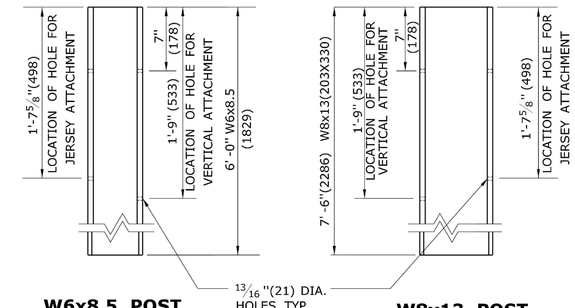

W6x8.5 POST (W150x13) 6'-0"(1829) LONG

W8x13 POST (W200x19) 7'-6"(2286) LONG

BOLT HOLE LAYOUT FOR W8x13(W200x19) AND W6x8.5 (W150x13)UNIFORM POST

(REFER TO GENERAL NOTES)

ALL METRIC DIMENSIONS ARE IN MILLIMETERS (mm) UNLESS OTHERWISE NOTED.

NO.	DATE	DESCRIPTION	REV. SHEET NO.

PLAN	BY	DATE
Surveyed		
Plotted		
Traced		
Designed		
New Const. Noted	CHECKED BY	
Opt. Field Chk. Noted		
NOTEBOOK NO.		

W-BEAM METAL BEAM RAIL HARDWARE

N.T.S.

F.H.W.A. REGION NO.	STATE	TOWN	FED. AID PROJ. NO.	PROJ. NO.	YEAR	ROUTE NO.	SHEET NO.	TOTAL SHEETS
1	CONN.	GREENWICH	N/A	9056-0055	2013	T.R.	5	29

REPLACEMENT OF JOHN STREET BRIDGE OVER EAST BRANCH BYRAM RIVER
MISCELLANEOUS DETAILS

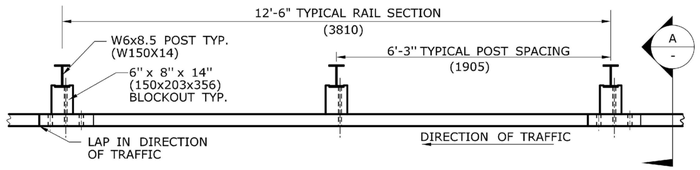

PLAN

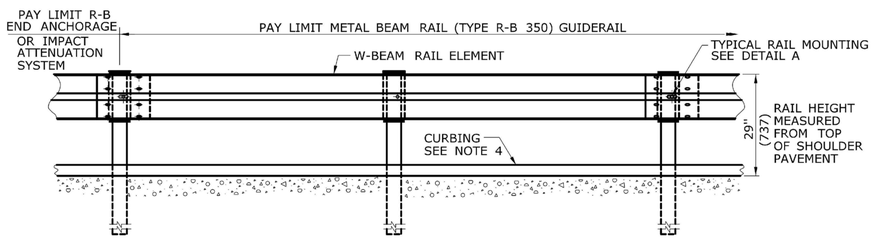

ELEVATION

METAL BEAM RAIL (TYPE R-B 350)

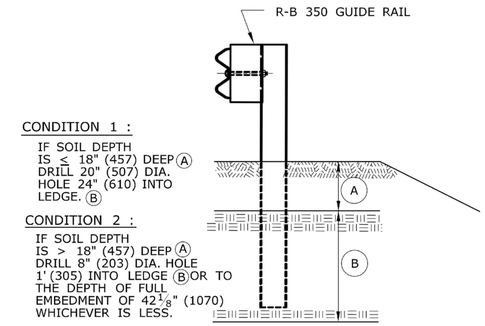

ELEVATION
(SEE NOTE 8)

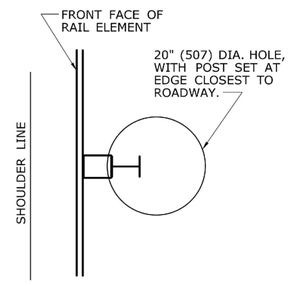

PLAN
CONDITION 1
(SEE NOTE 8)

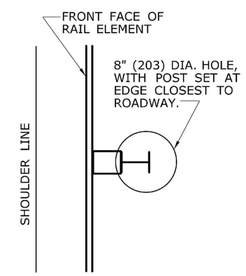

PLAN
CONDITION 2
(SEE NOTE 8)

DRILLING IN ROCK FOR GUIDERAIL POSTS

GENERAL NOTES:

1. SEE SHEET HW-910_01 FOR HARDWARE AND DELINEATOR DETAILS.
2. MAXIMUM DESIGN DEFLECTION FOR R-B 350 GUIDERAIL AT THE STANDARD POST SPACING OF 6'-3"(1905) IS 4'-3"(1295). DEFLECTION REQUIREMENT IS MEASURED FROM THE BACK OF POST TO THE FACE OF OBJECT.
3. FOR CURVES WITH RADII OF 150'(45.7m) OR LESS, ALL RAIL ELEMENTS SHALL BE SHOP FABRICATED TO THE PROPER RADIUS AND GALVANIZED AFTER FABRICATION. RADIUS RAIL WHEN REQUIRED AND NOTED ON THE PLANS, IS INCLUDED IN THE PAY ITEM FOR GUIDERAIL.
4. RAIL HEIGHT WITH CURBING SHALL BE MEASURED FROM THE TOP OF PAVEMENT. ON HIGH SPEED ROADWAYS (≥45mph 72.4kph), 4"(102) CURBING MAY BE USED IN CONJUNCTION WITH GUIDERAIL AND THE RAIL ELEMENT SHALL BE PLACED FLUSH WITH THE FACE OF CURB. ON LOW SPEED ROADWAYS (<45mph 72.4kph), 6"(152) CURBING MAY BE USED IN CONJUNCTION WITH GUIDERAIL AND THE RAIL ELEMENT SHALL BE PLACED A MAXIMUM OF 9"(229) BEHIND THE FACE OF CURB.
5. THREE BLOCKOUTS MAY BE USED FOR ONE POST ONLY. TWO BLOCKOUTS MAY BE USED FOR A SERIES OF POSTS. THE COST OF ADDITIONAL BLOCKOUTS AND LONGER BOLTS SHALL BE INCLUDED IN THE BID PRICE PER FOOT OF GUIDERAIL. EXTRA BLOCKOUTS AT TRANSITION TO BRIDGE PARAPETS SHOULD BE AVOIDED.
6. W-BEAM GUIDERAIL MAY BE PLACED 1' (305) OR MORE FROM THE EDGE OF PAVEMENT ONLY ON SLOPES 10:1 OR FLATTER AND WITHOUT CURBING. IF THE RAIL IS INSTALLED WITHIN 2'(610) OF THE EDGE OF PAVEMENT, THE RAIL HEIGHT IS MEASURED FROM THE SHOULDER SLOPE EXTENDED TO THE RAIL. IF THE RAIL IS INSTALLED BEYOND 2'(610) FROM THE EDGE OF PAVEMENT, THE RAIL HEIGHT IS MEASURED FROM THE GROUND DIRECTLY BELOW THE RAIL.
7. ALL R-B 350 GUIDERAIL TYPES INSTALLED ON EXPRESSWAYS AND RAMPS SHALL USE CLASS B, TYPE-II (10 GAUGE) W-BEAM RAIL ELEMENTS.
8. 20" (507) DIA. EXCAVATED HOLE SHALL BE BACKFILLED WITH SUITABLE MATERIAL, OR GRANULAR FILL COMPACTED IN 6" (150) LIFTS BEFORE DRIVING POST OR POSTS MAY BE SET IN EXCAVATED HOLE AND BACKFILLED WITH CONTROLLED LOW STRENGTH MATERIAL (CLSM). 8" (203) DIA. HOLE SHALL BE BACKFILLED WITH SUITABLE MATERIAL.
9. AS DIRECTED BY THE ENGINEER AND WHERE PAVEMENT FOR RAILING IS NOT BEING INSTALLED, A MIN. 6" DEPTH OF PROCESSED AGGREGATE SHALL BE INSTALLED FROM THE PAVEMENT EDGE OR BACK OF CURB TO A MINIMUM OF 2' (610) BEHIND THE GUIDERAIL POST AND COMPACTED IN 6" (150) LIFTS.
10. MINIMUM RAIL HEIGHT FOR NEW CONSTRUCTION SHALL BE 29" (737) ± 1" (25).

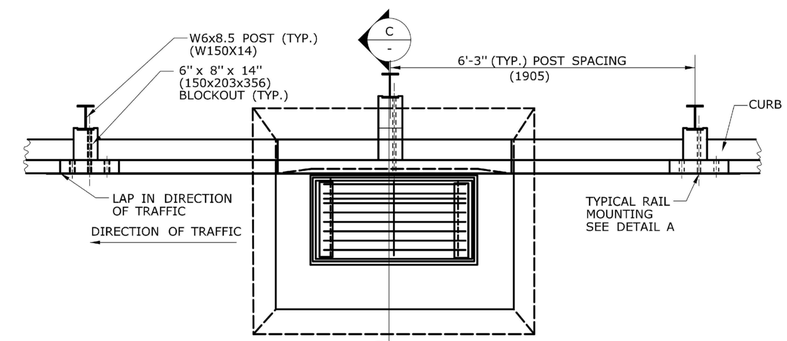

PLAN

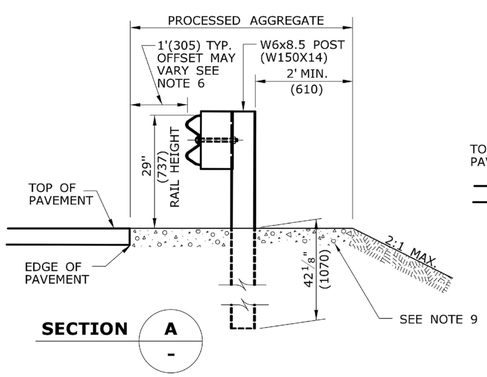

SECTION A -

NO CURB APPLICATION

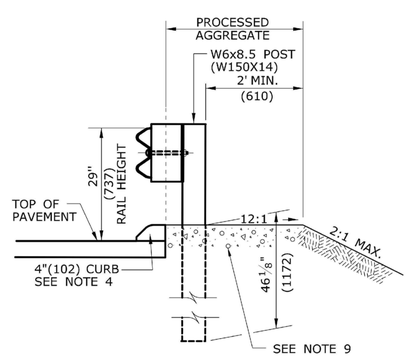

SECTION A -

CURB APPLICATION

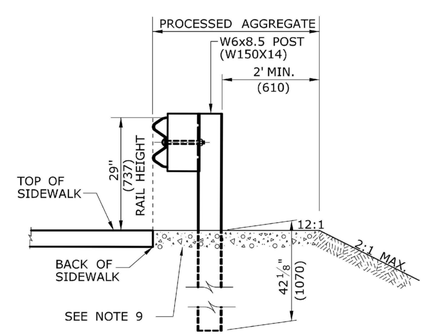

SECTION A -

SIDEWALK APPLICATION

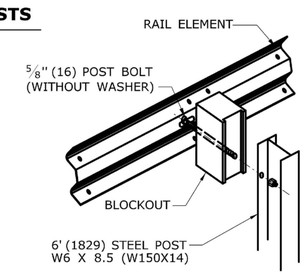

DETAIL A
RAIL MOUNTING

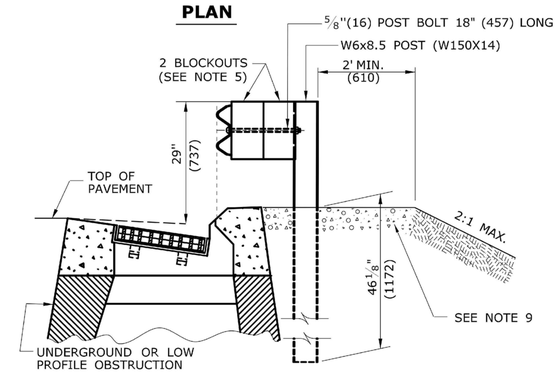

SECTION C -

MULTIPLE BLOCKOUT APPLICATION (MAY BE USED TO AVOID UNDERGROUND OR LOW PROFILE OBSTRUCTION)

ALL METRIC DIMENSIONS ARE IN MILLIMETERS (mm) UNLESS OTHERWISE NOTED.

METAL BEAM RAIL (TYPE R-B 350) GUIDERAIL

N.T.S.

NO.	DATE	DESCRIPTION	REV. SHEET NO.

PLAN	BY	DATE	CHECKED BY	DATE
NOTEBOOK NO.	Surveyed Plotted Traced Designed New Const. Noted Top. Field Chk. Noted			

CADD:061048A10-004-DET001.dwg PLOTTED DATE: Jan 30, 2013

F.H.W.A. REGION NO.	STATE	TOWN	FED. AID PROJ. NO.	PROJ. NO.	YEAR	ROUTE NO.	SHEET NO.	TOTAL SHEETS
1	CONN.	GREENWICH	N/A	9056-0055	2013	T.R.	6	29

REPLACEMENT OF JOHN STREET BRIDGE OVER EAST BRANCH BYRAM RIVER

MISCELLANEOUS DETAILS

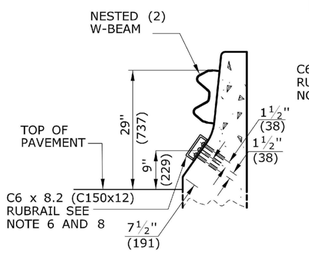

SECTION A - JERSEY SHAPE

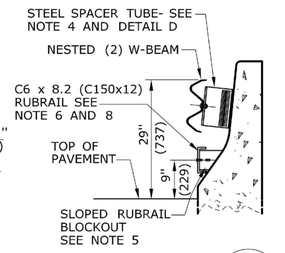

SECTION B - JERSEY SHAPE

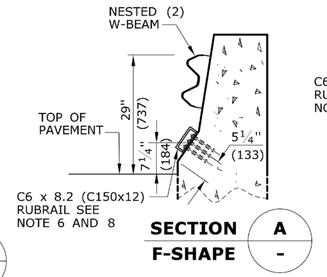

SECTION A - F-SHAPE

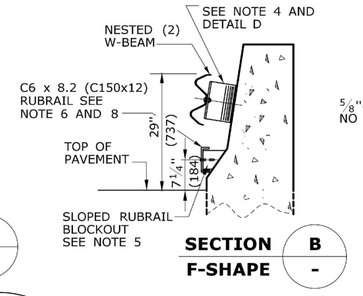

SECTION B - F-SHAPE

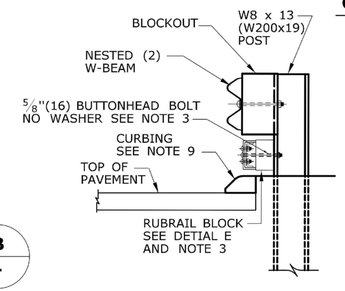

SECTION C

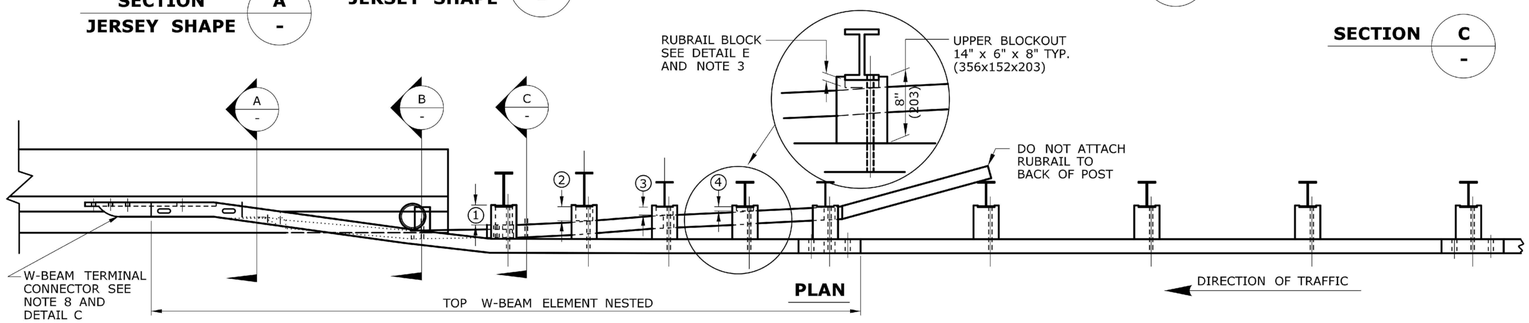

PLAN

GENERAL NOTES:

1. THIS R-B 350 GUIDERAIL TRANSITION IS APPROPRIATE FOR CONNECTION AT THE FOLLOWING LOCATIONS:
   (A) JERSEY SHAPE OR F-SHAPE PARAPET OR BARRIER WITH NO ELECTRICAL JUNCTION BOX WITHIN THE LIMITS OF THE ATTACHMENT (APPROXIMATELY 8'(2.44m)).
   (B) BRIDGE PARAPETS RETROFITTED FROM SAFETY WALK TO MODIFIED SAFETY SHAPE WITH NO ELECTRICAL JUNCTION BOX WITHIN THE LIMITS OF THE ATTACHMENT (APPROXIMATELY 8'(2.44m)).
   (C) LEADING AND TRAILING ENDS ON DUAL DIRECTION ROADWAYS.
2. POSTS 1 THROUGH 5 REQUIRE AN ADDITIONAL HOLE TO ATTACH LOWER BLOCKOUTS AND/OR RUBRAIL.
3. RUBRAIL BLOCKOUTS LOCATED ON POSTS 1 THROUGH 4 ARE OFFSET DRILLED AND SECURED WITH ⅝"(16) BUTTONHEAD BOLTS (SEE CHART FOR BOLT LENGTHS). SECURE BLOCKS TO POSTS 2 AND 4. SECURE RUBRAIL AND BLOCKOUTS TO POSTS 1 AND 3. RUBRAIL IS SECURED TO POST 5 WITH A ⅝" x 4½" (16x114) BUTTONHEAD BOLT. RUBRAIL IS FLARED TO BACK OF POST 6 AND NOT SECURED.
4. STEEL SPACER TUBE IS A SCHEDULE 40 GALVANIZED PIPE 6"(152) INSIDE DIAMETER x 9"(229) LONG. ATTACH TUBE TO RAIL ONLY WITH ⅝" x 1¼"(16x32) LONG BUTTONHEAD BOLT AND RECTANGULAR PLATE WASHER. TUBE IS NOT ATTACHED TO PARAPET.
5. SEE DETAIL F FOR SLOPED RUBRAIL BLOCKOUT. BLOCKOUT IS ATTACHED TO RAIL ELEMENT ONLY. USE ⅜" x 3"(10x76) LAG BOLT WITH FLAT WASHER.
6. SHOP FABRICATE THE C6 x 8.2 (C150x12) RUBRAIL END TO BE CONSISTENT WITH THE SLOPE OF THE JERSEY SHAPE OR F-SHAPE AND ATTACH FLUSH WITH THE SLOPED TOE OF THE PARAPET OR BARRIER.
7. USE CLASS B TYPE II W-BEAM RAIL ELEMENTS (10 GAUGE) FOR INSTALLATIONS ON EXPRESSWAYS AND RAMPS.
8. ANCHORAGE:
   (A) AT EXISTING PARAPETS OR BARRIERS, RUBRAIL SHALL BE ANCHORED USING THREE ⅝" x 6"(16x152) CHEMICALLY ANCHORED BOLTS WITH WASHERS OR AS DETAILED ON STRUCTURE SHEETS. MAXIMUM BOLT PROJECTION BEYOND THE NUT SHALL BE ½"(13).
   (B) AT EXISTING PARAPETS OR BARRIERS, THE W-BEAM TERMINAL CONNECTOR SHALL BE ANCHORED USING FIVE ⅞" x 12"(22x305) CHEMICALLY ANCHORED BOLTS WITH WASHERS, OR AS DETAILED ON THE STRUCTURE SHEETS. MAXIMUM BOLT PROJECTION BEYOND THE NUT SHALL BE ½"(13). THE 12"(305) MINIMUM LENGTH OF CHEMICALLY ANCHORED BOLTS SHALL INCLUDE A MINIMUM EMBEDMENT DEPTH OF 10"(254) INTO SUITABLY REINFORCED CONCRETE, OR AS RECOMMENDED BY MANUFACTURER OF BONDING MATERIAL.
   (C) NEW PARAPETS OR BARRIERS, THE W-BEAM TERMINAL CONNECTOR AND RUBRAIL SHALL BE ANCHORED AS DETAILED ON THE STRUCTURE PLANS.
9. FOR NEW CONSTRUCTION WHERE CURBING IS NEEDED, USE EITHER 4"(102) BITUMINOUS CONCRETE PARK CURBING OR PRECAST CONCRETE TRANSITION CURBING SET WITH A 4"(102) REVEAL. IF EXISTING CURBING IS GRANITE STONE TRANSITION CURBING, RESET CURB TO A 4"(102) REVEAL OR REMOVE IT AND REPLACE IT WITH 4"(102) CURBING.
10. POSTS 1 AND 2 ARE W8 x 13 (W200x19), 7'-6"(2286) LONG. ALL OTHER POSTS IN TRANSITION ARE W6 x 8.5 (W150x14), 6'(1829) LONG.
11. ADDITIONAL BLOCKOUTS WITH POSTS 1 THROUGH 6 SHOULD BE AVOIDED.
12. FOR SINGLE DIRECTION ROADWAY:
    INSTALL W-BEAM TERMINAL CONNECTOR BETWEEN NESTED GUIDERAIL ELEMENTS.
    FOR DUAL DIRECTION ROADWAY FOR APPROACHING TRAFFIC:
    INSTALL W-BEAM TERMINAL CONNECTOR BETWEEN NESTED GUIDERAIL ELEMENTS.
    FOR TRAILING END:
    INSTALL W-BEAM TERMINAL CONNECTOR OUTSIDE OF THE NESTED GUIDERAIL ELEMENTS.
13. MINIMUM RAIL HEIGHT FOR NEW CONSTRUCTION SHALL BE 29" (737) + 1" (25).

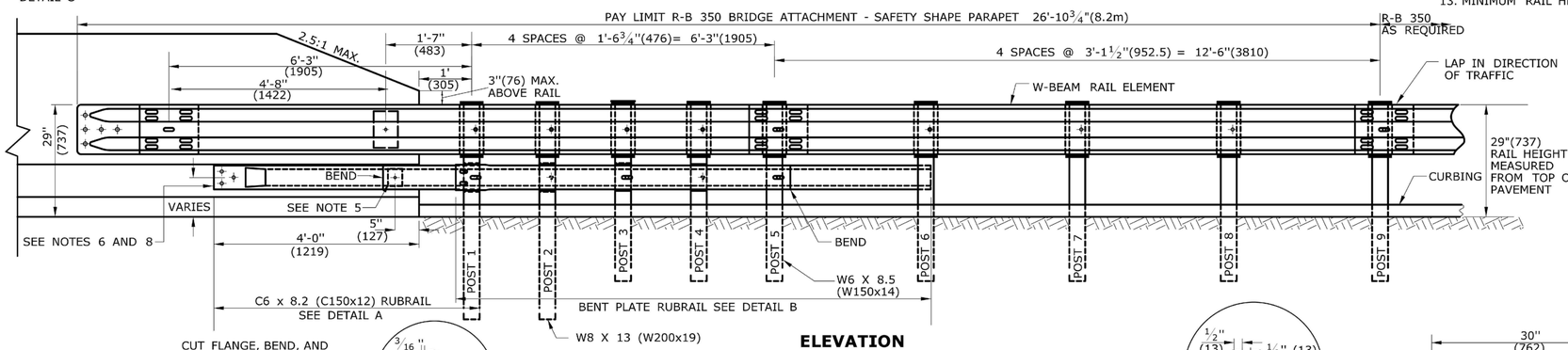

ELEVATION

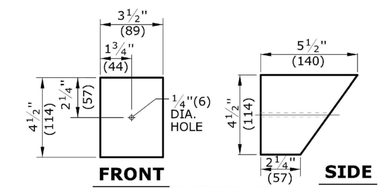

FRONT — SIDE

DETAIL F
SLOPED RUBRAIL BLOCKOUT

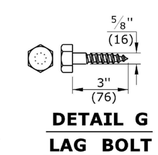

DETAIL G
LAG BOLT

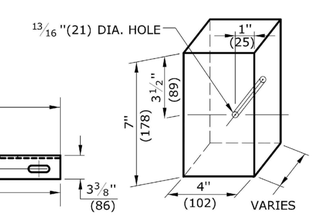

DETAIL E
RUBRAIL BLOCKOUT

RUBRAIL BLOCKS 7"(178) HIGH x 4"(102) WIDE		
POST	THICKNESS	BOLT LENGTH
1	4¼"(108)	9"(229)
2	3¼"(83)	5"(127)*
3	2"(51)	6"(152)
4	1"(25)	3"(76)*

* BOLTS FOR POSTS 2 AND 4 ARE USED TO ATTACH BLOCK TO POST. RUBRAIL NOT ATTACHED TO BLOCK.

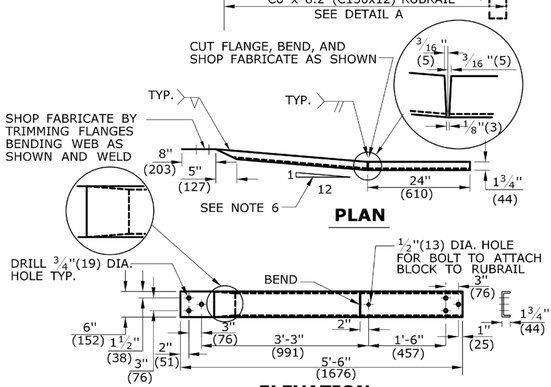

PLAN

ELEVATION

DETAIL A - C6 x 8.2 (C150x12) RUBRAIL

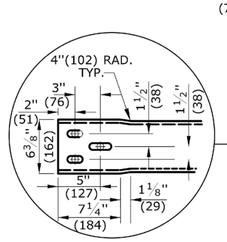

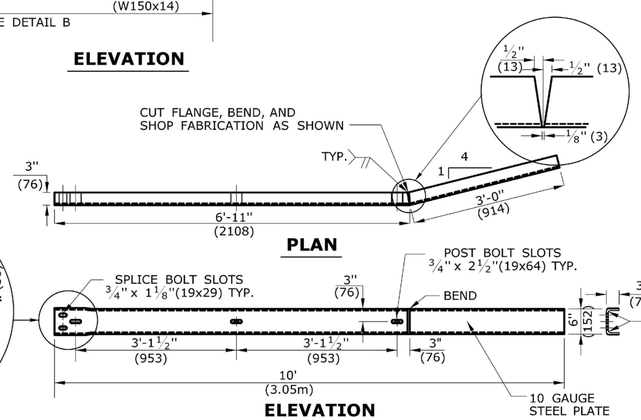

PLAN

ELEVATION

DETAIL B BENT PLATE RUBRAIL

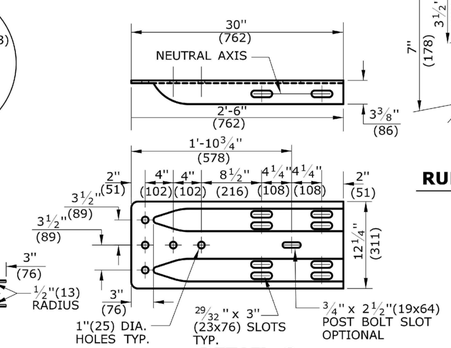

DETAIL C
W-BEAM TERMINAL CONNECTOR
CLASS B TYPE II
SEE NOTE 12

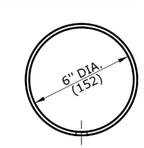

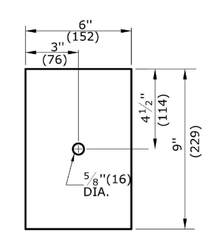

DETAIL D
STEEL SPACER TUBE
SEE NOTE 4

ALL METRIC DIMENSIONS ARE IN MILLIMETERS (mm) UNLESS OTHERWISE NOTED.

NO.	DATE	DESCRIPTION	REV. SHEET NO.

PLAN		
Surveyed		DATE
Plotted		
Traced		BY
Designed		
New Const. Noted		
Opr. Field Chk. Noted		DATE
NOTEBOOK		CHECKED BY
NO.		

R-B 350 BRIDGE ATTACHMENT TO SAFETY SHAPE PARAPET

N.T.S.

F.H.W.A. REGION NO.	STATE	TOWN	FED. AID PROJ. NO.	PROJ. NO.	YEAR	ROUTE NO.	SHEET NO.	TOTAL SHEETS
1	CONN.	GREENWICH	N/A	9056-0055	2013	T.R.	7	29

REPLACEMENT OF JOHN STREET BRIDGE OVER EAST BRANCH BYRAM RIVER

MISCELLANEOUS DETAILS

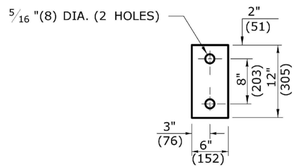

DETAIL A

TYPE 2 OBJECT MARKER

SIGN # 51-5030

OBJECT MARKER FACE SHALL BE YELLOW TYPE III RETROREFLECTORIZED. THE BOTTOM OF TYPE 2 OBJECT MARKER SHALL BE 4'(1219) ABOVE GROUND LEVEL MOUNTED ON METAL DELINEATOR POST. IT SHALL BE USED TO IDENTIFY CULVERT ENDS AND TYPE II END ANCHORS, OR AS DIRECTED BY THE ENGINEER.

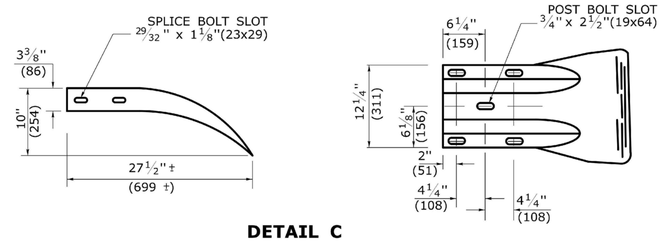

DETAIL C

W-BEAM TERMINAL ELEMENT

GENERAL NOTES:

1. R-B END ANCHORAGE TYPE I INSTALLED ON FREEWAYS AND RAMPS SHALL USE CLASS B (10 GAUGE) TERMINAL AND W-BEAM RAIL ELEMENTS. ALL OTHER R-B END ANCHORAGE TYPE I SHALL USE CLASS A (12 GAUGE) TERMINAL AND W-BEAM RAIL ELEMENTS.
2. R-B END ANGHORAGE TYPE II SHALL USE CLASS A (12 GAUGE) TERMINAL AND W-BEAM RAIL ELEMENTS.
3. OTHER RADII WHICH CAN BE DEMONSTRATED TO PROVIDE THE INSTALLATIONS SHOWN FOR END ANCHORAGE TYPE II MAY BE APPROVED.
4. J-HOOK BOLTS MAY BE SUBSTITUTED FOR BOTTOM PLATE ANCHORAGE IN CONCRETE END ANCHORS USING THE SAME SIZE, STRENGTH, AND LENGTH AS NOTED ON THE PLANS.
5. MINIMUM RAIL HEIGHT FOR NEW CONSTRUCTION SHALL BE 29" (737) + 1' (25).
6. R-B TYPE I END ANCHOR: INSTALL LEADING END USING DESIGN CLEAR ZONE DISTANCE MEASURED FROM TRAVEL WAY LINE TO END POST AS SHOWN ON PLANS, THEN PLACE CONCRETE ANCHOR 4'-6"(1372) FROM THE LINE OF GUIDERAIL EXTENSION. INSTALL TRAILING END ON DUAL DIRECTION ROADWAYS IN THE SAME MANNER EXCEPT MEASURE CLEAR ZONE FROM THE DOUBLE YELLOW LINE. INSTALL TRAILING END ON SINGLE DIRECTION ROADWAYS MEASURED FROM THE GUIDERAIL LINE EXTENDED AND OFFFSET 4'-6" (1372).

   R-B TYPE II END ANCHOR: INSTALL ONLY ON ROADWAYS WITH DESIGN SPEEDS < 45mph (72kph). FOR DUAL DIRECTION ROADWAYS INSTALL IN THE SAME MANNER AS TYPE I END ANCHOR FOR BOTH LEADING AND TRAILING END USING DESIGN CLEAR ZONE DISTANCE EXCEPT PLACE CONCRETE ANCHOR 2'-4" (711) MEASURED FROM THE LINE OF GUIDERAIL EXTENDED INSTALL TRAILING END ON SINGLE DIRECTION ROADWAYS MEASURED FROM THE GUIDERAIL LINE EXTENDED AND OFFSET 2'-4" (711).
7. SEE HW-911_04 FOR TYPICAL END ANCHOR GRADING PLAN.

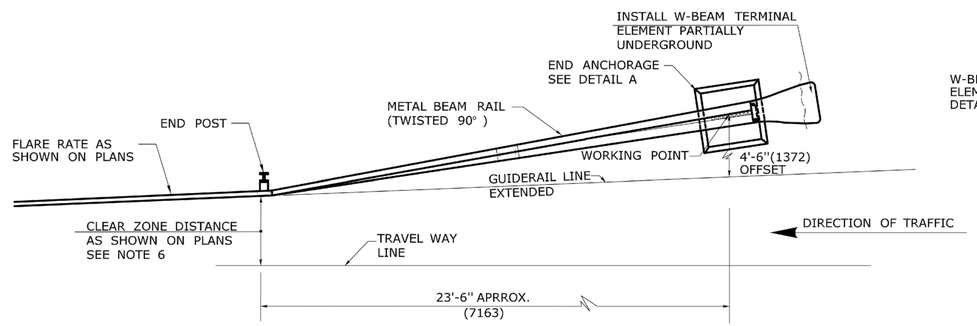

PLAN

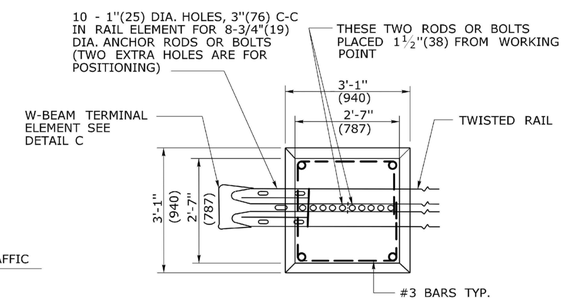

PLAN

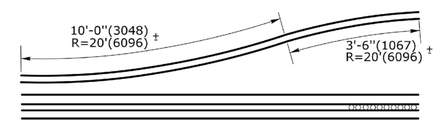

DETAIL D

SHOP CURVED RAIL

SEE NOTE 3

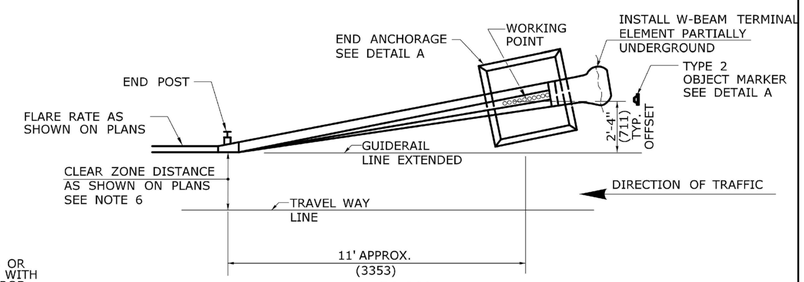

PLAN

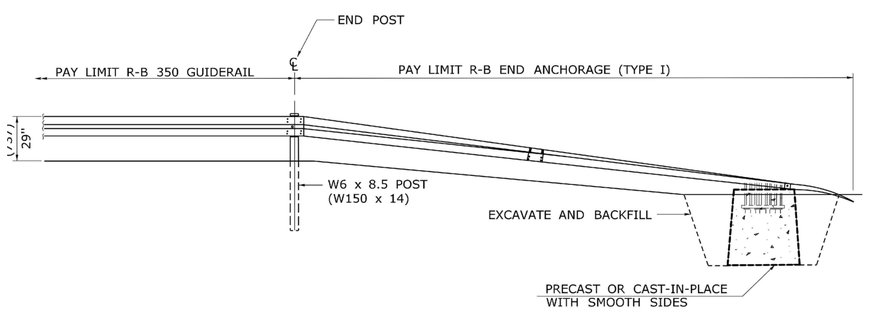

ELEVATION

R-B END ANCHORAGE TYPE I (ROADSIDE APPLICATION)

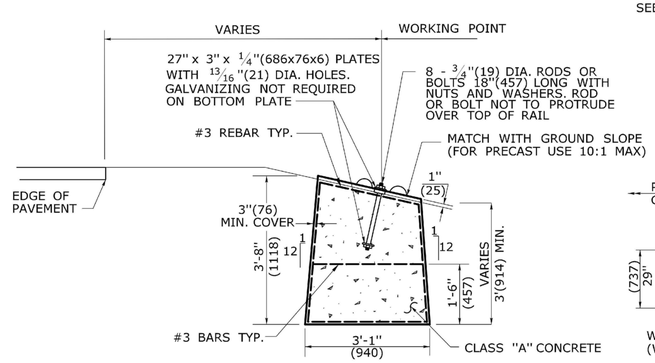

ELEVATION
DETAIL A

ROADSIDE CONCRETE END ANCHOR

SEE NOTE 4

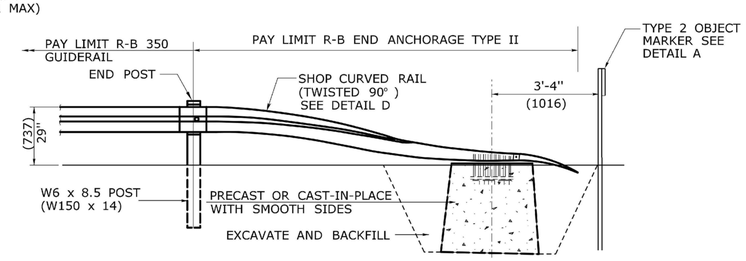

ELEVATION

R-B END ANCHORAGE TYPE II

SEE NOTE 2

ALL METRIC DIMENSIONS ARE IN MILLIMETERS (mm) UNLESS OTHERWISE NOTED.

NO.	DATE	DESCRIPTION	REV. SHEET NO.

R-B 350 ANCHORAGE TYPE I AND II

PLAN			
NOTEBOOK NO.			
Surveyed			
Plotted			
Traced			
Designed			
New Const. Noted			
Top Field Chk. Noted			
BY	DATE	CHECKED BY	DATE

F.H.W.A. REGION NO.	STATE	TOWN	FED. AID PROJ. NO.	PROJ. NO.	YEAR	ROUTE NO.	SHEET NO.	TOTAL SHEETS
1	CONN.	GREENWICH	N/A	9056-0055	2013	T.R.	8	29

REPLACEMENT OF JOHN STREET BRIDGE OVER EAST BRANCH BYRAM RIVER
MISCELLANEOUS DETAILS

GENERAL NOTES:

1. THIS GRADING PLAN APPLIES TO THE LATEST VERSION OF DEPARTMENT APPROVED PROPRIETARY IMPACT ATTENUATION SYSTEM TANGENTIAL TYPES CHOSEN FROM THE DEPARTMENT'S QUALIFIED PRODUCTS LIST.
2. A MINIMUM AREA OF 75'(22.86m) LONG BY THE DESIGNATED CLEAR ZONE WIDTH IMMEDIATELY BEHIND AND BEYOND THE TERMINAL SHOULD BE FREE OF FIXED OBJECTS.
3. THE TERMINAL NOSE SHALL BE OFFSET FROM THE EDGE OF ROADWAY 1'(305) USING A 50:1 TAPER STARTING AT POST 9. REFER TO MANUFACTURER'S DETAILS FOR PROPER CONSTRUCTION OF SYSTEM.
4. WHEN A DRIVEWAY OR INTERSECTING ROAD IS WITHIN 5' OF THE SYSTEM, AND CURB EXISTS REMOVE CURBING UPTO POST 3. REDIRECTION BEGINS AT POST 3.
5. IF A UTILITY POLE OR FIXED OBJECT EXISTS NEAR END OF SYSTEM, THE SYSTEM SHALL BE INSTALLED SUCH THAT THE POINT OF REDIRECTION OCCURS PRIOR TO THE UTILITY POLE OR OBJECT. IN ADDITION, THE DEFLECTION DISTANCE NOTED IS 4'-3" FOR STANDARD W-BEAM STRONG POST GUIDERAIL INSTALLED @ A 6'-3" POST SPACING AND SHALL BE MAINTAINED. A CLEAR RUN-OUT LENGTH BEHIND THE SYSTEM FREE OF FIXED OBJECTS IS ESSENTIAL TO PROPER FUNCTIONING OF A PROPRIETARY GATING IMPACT ATTENUATION SYSTEM AND SHOULD BE STRIVED FOR.

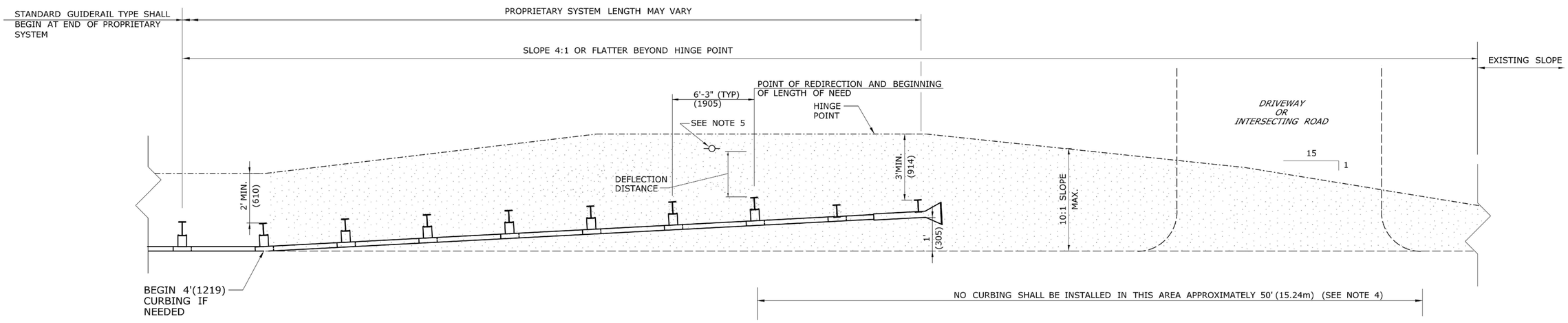

PLAN

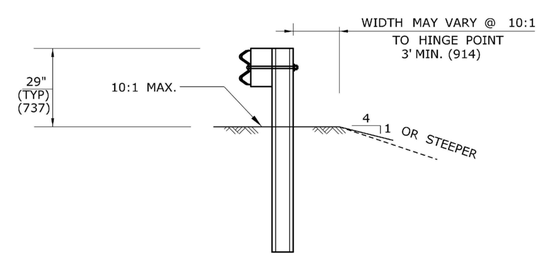

TYPICAL SECTION

ALL METRIC DIMENSIONS ARE IN MILLIMETERS (mm) UNLESS OTHERWISE NOTED.

NO.	DATE	DESCRIPTION	REV. SHEET NO.

GRADING PLAN FOR TYPE B IMPACT ATTENUATION SYSTEM (TANGENTIAL)

N.T.S.

PLAN	BY	DATE	CHECKED BY	DATE
Surveyed				
Plotted				
Traced				
Designed				
New Const. Noted				
Typ Field Chk. Noted				
NOTEBOOK NO.				

F.H.W.A. REGION NO.	STATE	TOWN	FED. AID PROJ. NO.	PROJ. NO.	YEAR	ROUTE NO.	SHEET NO.	TOTAL SHEETS
1	CONN.	GREENWICH	N/A	9056-0055	2013	T.R.	9	29

REPLACEMENT OF JOHN STREET BRIDGE NO. 056055 OVER EAST BRANCH BYRAM RIVER

SEDIMENTATION & EROSION CONTROL PLAN

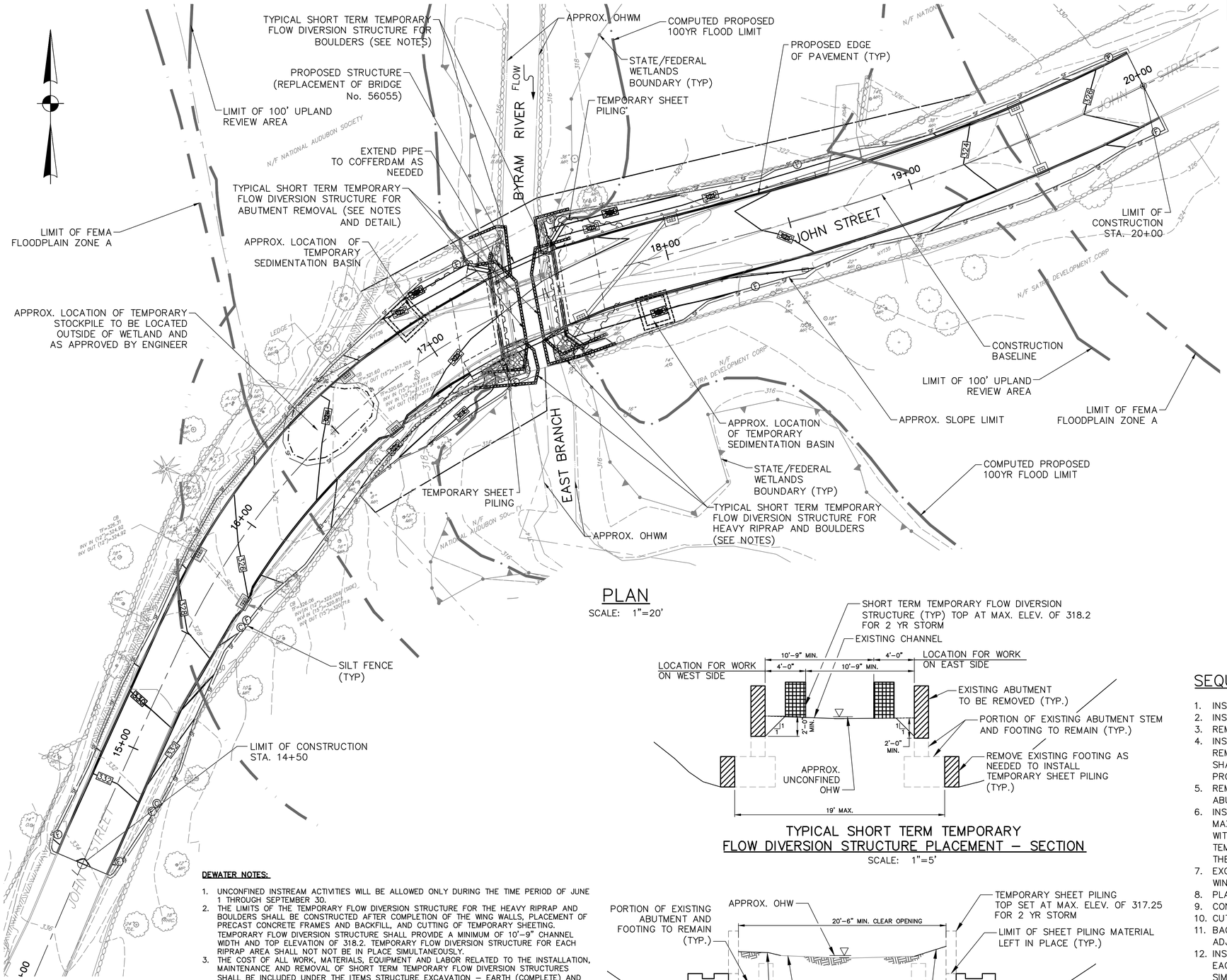

PLAN

SCALE: 1"=20'

TYPICAL SHORT TERM TEMPORARY FLOW DIVERSION STRUCTURE PLACEMENT – SECTION

SCALE: 1"=5'

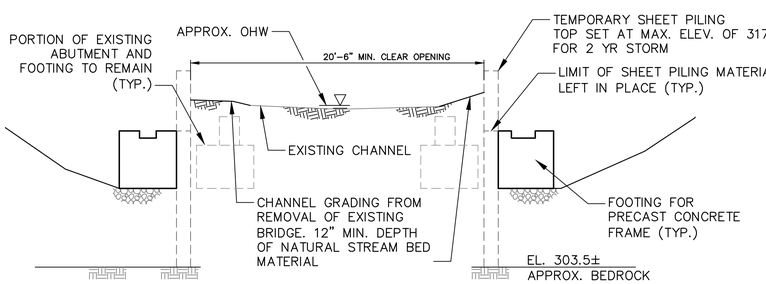

FOOTING EXCAVATION – SECTION

SCALE: 1"=5'

SEDIMENTATION & EROSION CONTROL NOTES:

1. EROSION AND SEDIMENT CONTROL MEASURES SHALL BE INSTALLED PRIOR TO CONSTRUCTION. STABILIZATION OF ALL REGRADED AND STOCKPILE AREAS SHALL BE INITIATED AS SOON AS PRACTICAL AND MAINTAINED THROUGHOUT CONSTRUCTION.
2. ALL EROSION AND SEDIMENT CONTROL MEASURES SHALL BE CONSTRUCTED IN ACCORDANCE WITH STANDARDS AND SPECIFICATIONS OF THE "GUIDELINES FOR SOIL EROSION AND SEDIMENT CONTROL CONTROL" AND FORM 816.
3. ADDITIONAL EROSION CONTROL MEASURES SHALL BE INSTALLED DURING THE CONSTRUCTION PERIOD IF DEEMED NECESSARY BY THE ENGINEER.
4. CATCH BASINS WILL BE PROTECTED WITH HAYBALE FILTERS THROUGHOUT THE CONSTRUCTION PERIOD UNTIL ALL DISTURBED AREAS ARE THOROUGHLY STABILIZED. FILTER FABRIC SHALL BE INSTALLED UNDER GRATE OPENING UNTIL PAVEMENT IS IN PLACE AND GRASS AREAS STABILIZE.
5. STABILIZATION OF SLOPES IN CUT AREAS (USING MULCH OR TURF ESTABLISHMENT LAWN) AND THE INSTALLATION OF CONTROL LINE (HAYBALE CHECK OR FILTER FABRIC) AT THE TOE OF SLOPE SHALL BE INITIATED WITHIN THE FIRST (30) DAYS OF COMMENCEMENT OF CUT.
6. SEEDING SHALL COMPLY TO FORM 816 AND TURF ESTABLISHMENT LAWN SPECIAL PROVISION
7. IF PERMANENT STABILIZATION OF SLOPES AND TURF ESTABLISHMENT LAWN AREAS CANNOT BE REALIZED BY SEPTEMBER 15TH, THEN TEMPORARY SEEDING SHALL BE APPLIED TO BARE AREAS, AS SPECIFIED IN THE SPECIAL PROVISIONS.
8. THE CONTRACTOR SHALL ESTABLISH AN EROSION CONTROL LINE (HAYBALE CHECK OR FILTER FABRIC) APPROXIMATELY TEN (10') FEET FROM TOE OF SLOPE OF EMBANKMENTS PRIOR TO CONSTRUCTION. STABILIZATION OF SLOPES (WITH MULCH OR TURF ESTABLISHMENT LAWN) SHALL BE INITIATED AS SOON AS POSSIBLE.
9. SEDIMENT REMOVED FROM CONTROL STRUCTURES WILL BE DISPOSED OF IN A MANNER THAT IS CONSISTENT WITH THE INTENT OF "BEST MANAGEMENT PRACTICES". ALL HAYBALES OR SILT FENCE RETAINING SEDIMENT OVER 1/2 THEIR HEIGHT SHALL HAVE THE SEDIMENT REMOVED AND ALL DAMAGED EROSION CONTROLS REMOVED AND REPLACED
10. CONTRACTOR SHALL ASSUME THE RESPONSIBILITY FOR IMPLEMENTING THIS EROSION AND SEDIMENT CONTROL PLAN. THIS RESPONSIBILITY INCLUDES THE INSTALLATION AND MAINTENANCE OF CONTROL MEASURES, INFORMING ALL PARTIES ENGAGED ON THE CONSTRUCTION SITE OF THE REQUIREMENTS AND OBJECTIVES OF THE PLAN.
11. THE CONTRACTOR SHALL BE RESPONSIBLE TO CONTROL DUST AND WIND EROSION THROUGHOUT THE CONSTRUCTION PERIOD. DUST CONTROL SHALL INCLUDE, BUT IS NOT LIMITED TO, SPRINKLING OF WATER ON EXPOSED SOILS AND SUBGRADE. CONTRACTOR SHALL CONTROL DUST TO PREVENT A HAZARD TO TRAFFIC ON ADJACENT ROADWAYS.
12. WHERE DEWATERING IS NECESSARY, THERE SHALL NOT BE A DISCHARGE DIRECTLY INTO WETLANDS OR WATERCOURSES. PROPER METHODS AND DEVICES SHALL BE UTILIZED, SUCH AS PUMPING WATER INTO A TEMPORARY SEDIMENTATION BASIN. TEMPORARY SEDIMENTATION BASIN SHALL MEET REQUIREMENTS 2002 CONNECTICUT GUIDELINES FOR SOIL EROSION AND SEDIMENT CONTROL, CHAPTER 5, SECTION 13-7 PUMPING SETTLING BASIN.

SEQUENCE OF CONSTRUCTION

1. INSTALL SEDIMENTATION CONTROL DEVICES
2. INSTALL DETOUR AND CLOSE ROADWAY PER MAINTENANCE & PROTECTION OF TRAFFIC PLAN
3. REMOVE EXISTING BRIDGE SUPERSTRUCTURE.
4. INSTALL SHORT TERM TEMPORARY FLOW DIVERSION STRUCTURE FOR EXISTING ABUTMENT REMOVAL (3 DAYS MAX. EACH SIDE), SHORT TERM TEMPORARY FLOW DIVERSION STRUCTURE SHALL NOT BE IN PLACE SIMULTANEOUSLY. THE MAXIMUM TOP ELEVATION SHALL PROVIDE PROTECTION FOR THE COMPUTED 2-YEAR FLOOD WITH 1 FOOT OF FREEBOARD.
5. REMOVE EXISTING ABUTMENTS, RESTORE RIVERBED AND GRADE AREA BEHIND EXISTING ABUTMENTS
6. INSTALL TEMPORARY SHEET PILING TO BE LEFT IN PLACE FOR LONG TERM COFFERDAM. THE MAXIMUM TOP ELEVATION SHALL PROVIDE PROTECTION FOR THE COMPUTED 2-YEAR FLOOD WITH 1 FOOT OF FREEBOARD. AS NEEDED AND AS DIRECTED BY THE ENGINEER, INSTALL TEMPORARY DRAINAGE OUTLETS FOR THE EXISTING/PROPOSED SYSTEMS PRIOR TO CUTTING THE PERMANENT SHEET PILING.
7. EXCAVATE, DEWATER, AND CONSTRUCT FOOTINGS FOR PRECAST CONCRETE FRAME AND WINGWALLS
8. PLACE PRECAST CONCRETE FRAME SECTIONS, SHIM AND GROUT.
9. CONSTRUCT WINGWALLS.
10. CUT PERMANENT STEEL SHEET PILES TO TOP OF FOOTINGS
11. BACKFILL AREAS BETWEEN CUT PILES AND PRECAST CONCRETE FRAME, AND GRADE AREAS ADJACENT TO WINGWALLS.
12. INSTALL SHORT TERM TEMPORARY FLOW DIVERSION STRUCTURE FOR RIPRAP (3 DAYS MAX. EACH SIDE), SHORT TERM TEMPORARY FLOW DIVERSION STRUCTURE SHALL NOT BE IN PLACE SIMULTANEOUSLY.
13. INSTALL HEAVY RIPRAP AND PLACE BOULDERS
14. CONSTRUCT PARAPETS ON PRECAST CONCRETE FRAMES.
15. PLACE CONCRETE FILL ON PRECAST CONCRETE FRAMES.
16. CONSTRUCT ROADWAY, APPROACH SLAB SEATS, APPROACH SLABS AND BRIDGE APPROACHES.
17. REMOVE DETOUR AND OPEN ROAD
18. REMOVE SEDIMENTATION CONTROL DEVICES

DEWATER NOTES:

1. UNCONFINED INSTREAM ACTIVITIES WILL BE ALLOWED ONLY DURING THE TIME PERIOD OF JUNE 1 THROUGH SEPTEMBER 30.
2. THE LIMITS OF THE TEMPORARY FLOW DIVERSION STRUCTURE FOR THE HEAVY RIPRAP AND BOULDERS SHALL BE CONSTRUCTED AFTER COMPLETION OF THE WING WALLS, PLACEMENT OF PRECAST CONCRETE FRAMES AND BACKFILL, AND CUTTING OF TEMPORARY SHEETING. TEMPORARY FLOW DIVERSION STRUCTURE SHALL PROVIDE A MINIMUM OF 10'-9" CHANNEL WIDTH AND TOP ELEVATION OF 318.2. TEMPORARY FLOW DIVERSION STRUCTURE FOR EACH RIPRAP AREA SHALL NOT NOT BE IN PLACE SIMULTANEOUSLY.
3. THE COST OF ALL WORK, MATERIALS, EQUIPMENT AND LABOR RELATED TO THE INSTALLATION, MAINTENANCE AND REMOVAL OF SHORT TERM TEMPORARY FLOW DIVERSION STRUCTURES SHALL BE INCLUDED UNDER THE ITEMS STRUCTURE EXCAVATION – EARTH (COMPLETE) AND STRUCTURE EXCAVATION – ROCK (COMPLETE)

TEMPORARY HYDRAULIC DATA	
AVERAGE DAILY FLOW	3.1 cfs
AVERAGE SPRING FLOW	6.1 cfs
TEMPORARY DESIGN DISCHARGE	100 cfs
TEMPORARY DESIGN FREQUENCY	2 Year
TEMP. WATER SURFACE ELEV. UPSTREAM	317.2 ft (WORST CASE*)
TEMP. WATER SURFACE ELEV. DOWNSTREAM	316.2 ft (WORST CASE*)

* WORST CASE IS WHEN THE WATERCOURSE IS RESTRICTED TO 10'-9" CHANNEL WIDTH DURING THE PARTIAL REMOVAL OF THE EXISTING FOOTING (SHORT TERM TEMPORARY FLOW DIVERSION STRUCTURE)

PLAN			
Surveyed		BY	DATE
Plotted			
Traced			
Designed			
New Const. Noted			
Top Field Chk. Noted			
NOTEBOOK NO.		CHECKED BY	DATE

REVISIONS			
NO.	DATE	DESCRIPTION	REV. SHEET NO.

F.H.W.A. REGION NO.	STATE	TOWN	FED. AID PROJ. NO.	PROJ. NO.	YEAR	ROUTE NO.	SHEET NO.	TOTAL SHEETS
1	CONN.	GREENWICH	N/A	9056-0055	2013	T.R.	10	29

REPLACEMENT OF JOHN STREET BRIDGE NO. 056055 OVER EAST BRANCH BYRAM RIVER

ROADWAY PLAN

NOTES:

1. THE CONTRACTOR IS RESPONSIBLE FOR OBTAINING ALL NECESSARY LOCAL AND STATE APPROVALS AND PERMITS PRIOR TO THE START OF CONSTRUCTION.
2. THE CONTRACTOR SHALL CONFORM TO ALL REQUIREMENTS OF THE LOCAL AND STATE AGENCIES.
3. THE LOCATION OF ALL UTILITIES SHOWN HEREON IS BASED ON THE BEST AVAILABLE DATA. THE LOCATIONS ARE APPROXIMATE AND ALL UTILITIES MAY NOT BE SHOWN. PRIOR TO BEGINNING ANY CONSTRUCTION, THE CONTRACTOR WILL BE RESPONSIBLE TO NOTIFY "CALL BEFORE YOU DIG" AT 1-800-922-4455 AND HAVE ALL UTILITIES MARKED ON THE GROUND.
4. SITE TO BE GRADED SMOOTHLY AND EVENLY IN ACCORDANCE WITH THE PROPOSED CROSS SECTIONS AND GRADING PLAN. THE CONTRACTOR IS RESPONSIBLE FOR INSURING A POSITIVE DRAINAGE FLOW TO ALL CATCH BASINS WITHOUT CREATING ANY FLAT SPOTS THAT WILL RESULT IN STANDING WATER.
5. INSTALL SEDIMENTATION AND EROSION CONTROL MEASURES PRIOR TO START OF CONSTRUCTION.
6. ALL WORK IN TOWN AND STATE ROADWAYS SHALL COMPLY WITH STANDARDS AND REGULATIONS OF THE RESPECTIVE AUTHORITY. ALL TRAFFIC CONTROL MEASURES SHALL COMPLY WITH THE REQUIREMENTS OF THE SPECIFICATIONS FOR TRAFFIC CONTROL.
7. THE CONTRACTOR SHALL COORDINATE THE LIMIT OF THE EXISTING 12" CCP AT WING WALL 1A. IF THE PIPE IS DETERMINED TO BE NOT IN USE THE LAST 15 FEET OF PIPE SHALL BE REMOVED AND REMAINDER OF THE PIPE ABANDONED. IF THE PIPE IS DETERMINED TO BE IN USE THE LAST 20 FEET OF PIPE SHALL BE REPLACED AND REDIRECTED TO OUTLET THROUGH WING WALL 1A. OUTLET PROTECTION SHALL BE PLACED AT THE WING WALL IF THE OUTLET IS TO BE MAINTAINED.

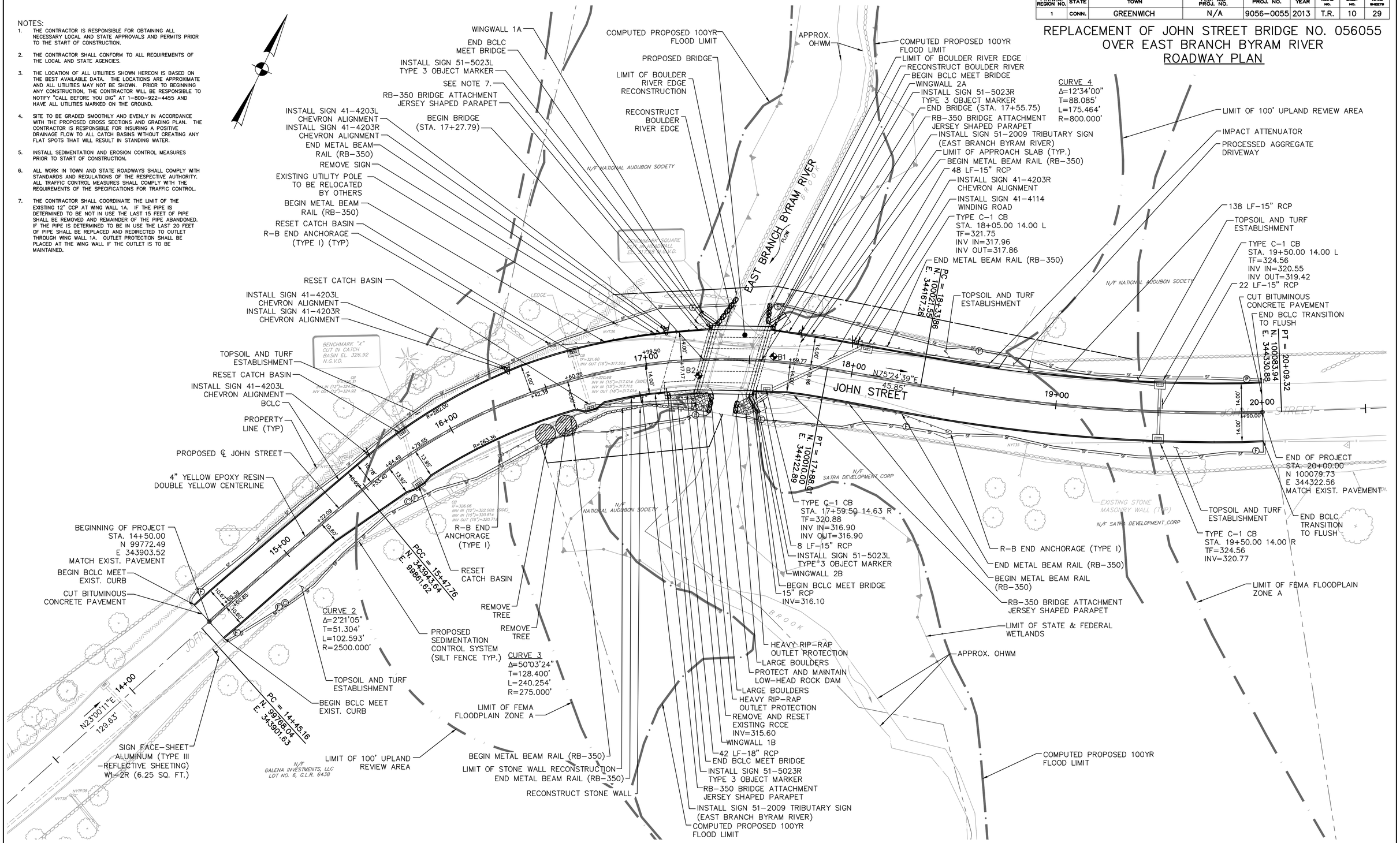

ROADWAY PLAN

SCALE: 1"=20'

REVISIONS			
NO.	DATE	DESCRIPTION	REV. SHEET NO.

PLAN			
Surveyed		BY	DATE
Processed			
Plotted			
Designed		CHECKED BY	DATE
NOTEBOOK	New Const. Noted		
NO.	Top Field Chk. Noted		

CADD:061048A10-006-PLN001.dwg PLOTTED DATE: Jan 30, 2013

F.H.W.A. REGION NO.	STATE	TOWN	FED. AID PROJ. NO.	PROJ. NO.	YEAR	ROUTE NO.	SHEET NO.	TOTAL SHEETS
1	CONN.	GREENWICH	N/A	9056-0055	2013	T.R.	11	29

REPLACEMENT OF JOHN STREET BRIDGE OVER EAST BRANCH BYRAM RIVER

ROADWAY PROFILE

SCALE: 1"V=4'
SCALE: 1"H=40'

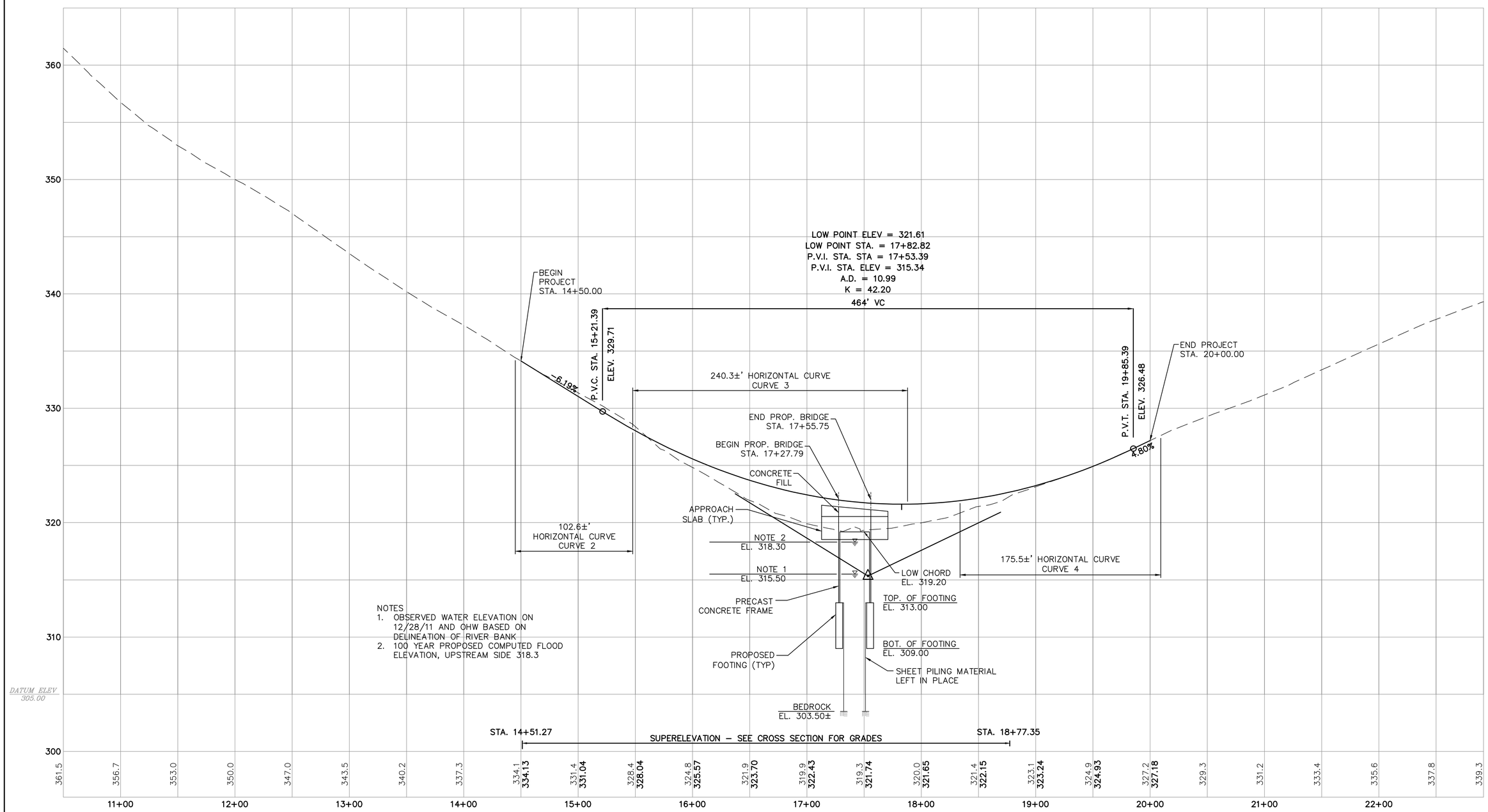

NOTES
1. OBSERVED WATER ELEVATION ON 12/28/11 AND OHW BASED ON DELINEATION OF RIVER BANK
2. 100 YEAR PROPOSED COMPUTED FLOOD ELEVATION, UPSTREAM SIDE 318.3

PLAN	BY	DATE	CHECKED BY	DATE
NOTEBOOK NO. ____	Surveyed ____ Plotted ____ Traced ____ Designed ____ New Const. Noted ____ Top. Field Chk. Noted ____			

REVISIONS			
NO.	DATE	DESCRIPTION	REV. SHEET NO.

F.H.W.A. REGION NO.	STATE	TOWN	FED. AID PROJ. NO.	PROJ. NO.	YEAR	ROUTE NO.	SHEET NO.	TOTAL SHEETS
1	CONN.	GREENWICH	N/A	9056-0055	2013	T.R.	12	29

REPLACEMENT OF JOHN STREET BRIDGE NO. 056055 OVER EAST BRANCH BYRAM RIVER

GRADING PLAN

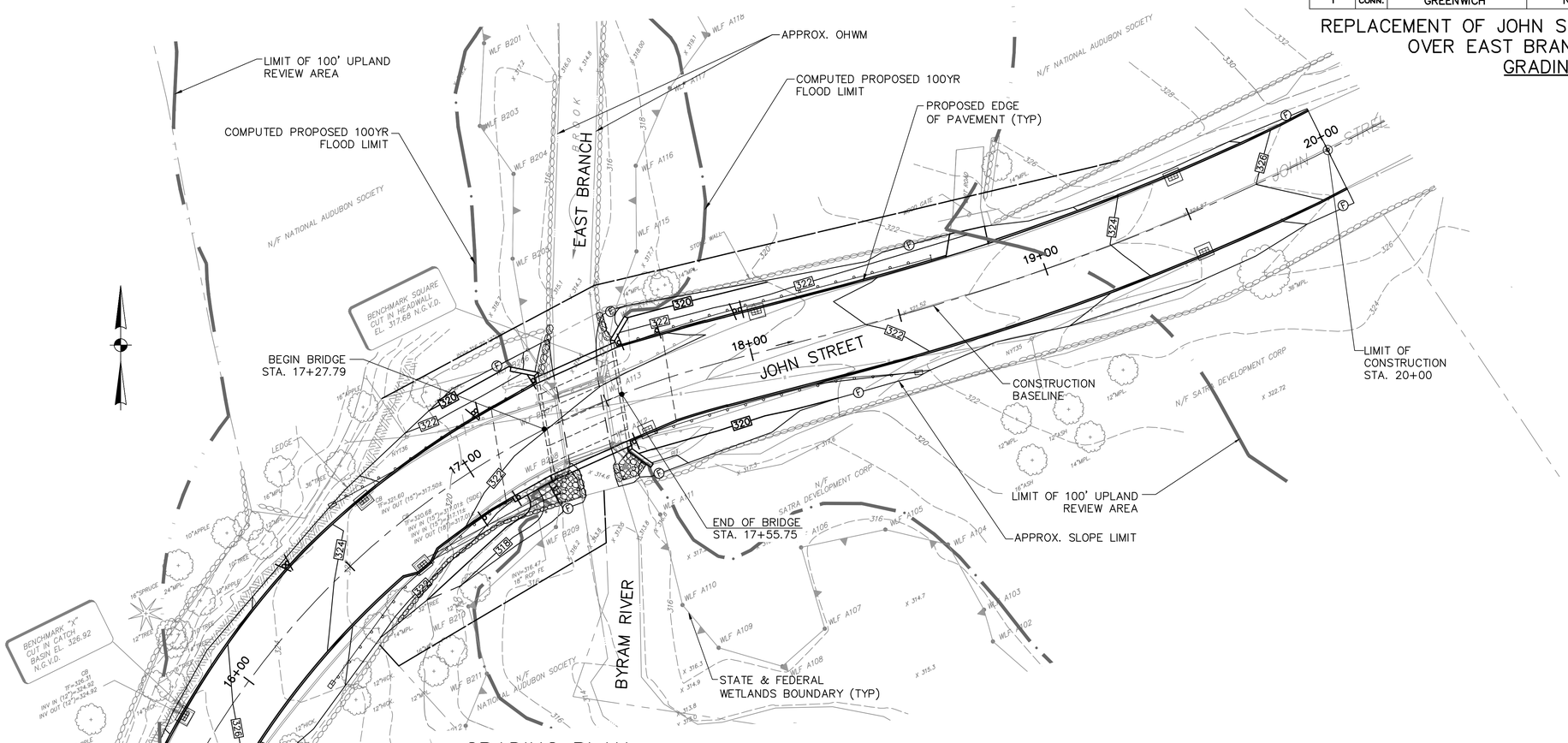

GRADING PLAN

SCALE: 1"=20'

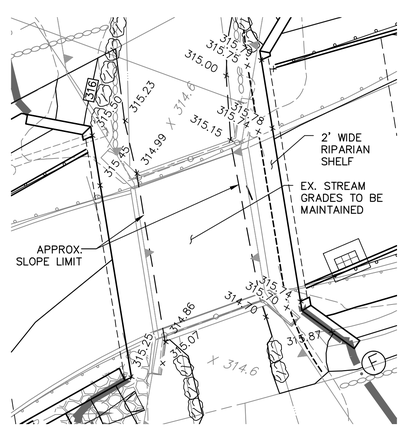

CHANNEL GRADING PLAN

SCALE: 1"=10'

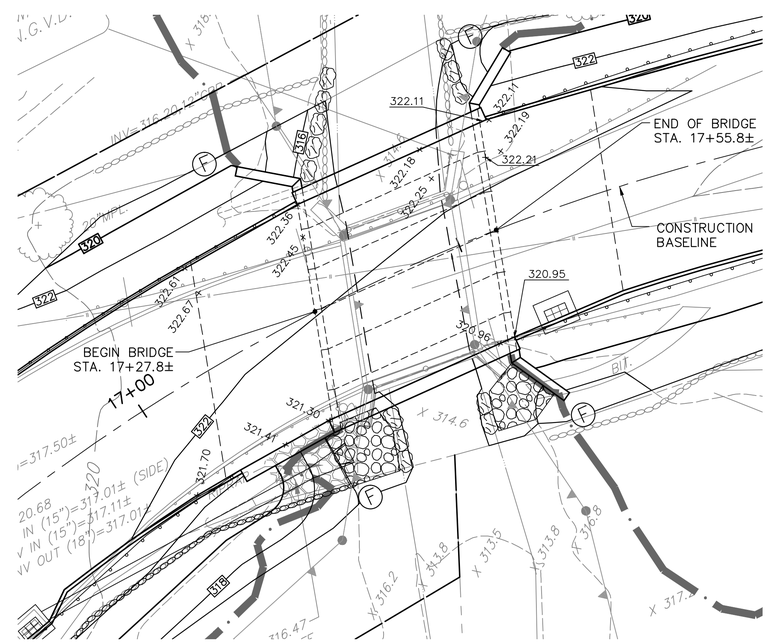

BRIDGE GRADING PLAN

SCALE: 1"=10'

REVISIONS			
NO.	DATE	DESCRIPTION	REV. SHEET NO.

PLAN	BY	DATE	CHECKED BY	DATE
NOTEBOOK NO. ____	Surveyed			
	Platted			
	Traced			
	Designed			
	New Const. Noted			
	Const. Noted			
	Field Chk. Noted			

CADD:061048A10-008-GRD001.dwg PLOTTED DATE: Jan 30, 2013

F.H.W.A. REGION NO.	STATE	TOWN	FED. AID PROJ. NO.	PROJ. NO.	YEAR	ROUTE NO.	SHEET NO.	TOTAL SHEETS
1	CONN.	GREENWICH	N/A	9056-055	2013	T.R.	13	29

REPLACEMENT OF JOHN STREET BRIDGE OVER EAST BRANCH BYRAM RIVER

MAINTENANCE & PROTECTION OF TRAFFIC

CONSTRUCTION SIGN SUMMARY

DETOUR SIGN LETTER	CONNDOT IDENTIF-ICATION NUMBER	SIZE OF SIGN		TEXT	NUMBER OF SIGNS REQUIRED	AREA IN SQUARE FEET
		WIDTH	HEIGHT			
A	80-9078	60	30	BRIDGE CLOSED XX MILES AHEAD LOCAL TRAFFIC ONLY **	2	25.00
B	51-2625	21	15	↑ *	3	6.56
C		30	18	JOHN STREET	10	37.50
D	80-9082	48	30	BRIDGE OUT	8	80.00

* BLACK ON ORANGE BACKGROUND

** SEE DETOUR PLAN FOR SIGN LOCATIONS

*** TO BE MOUNTED WITH HIGH INTENSITY BARRICADE WARNING LIGHTS

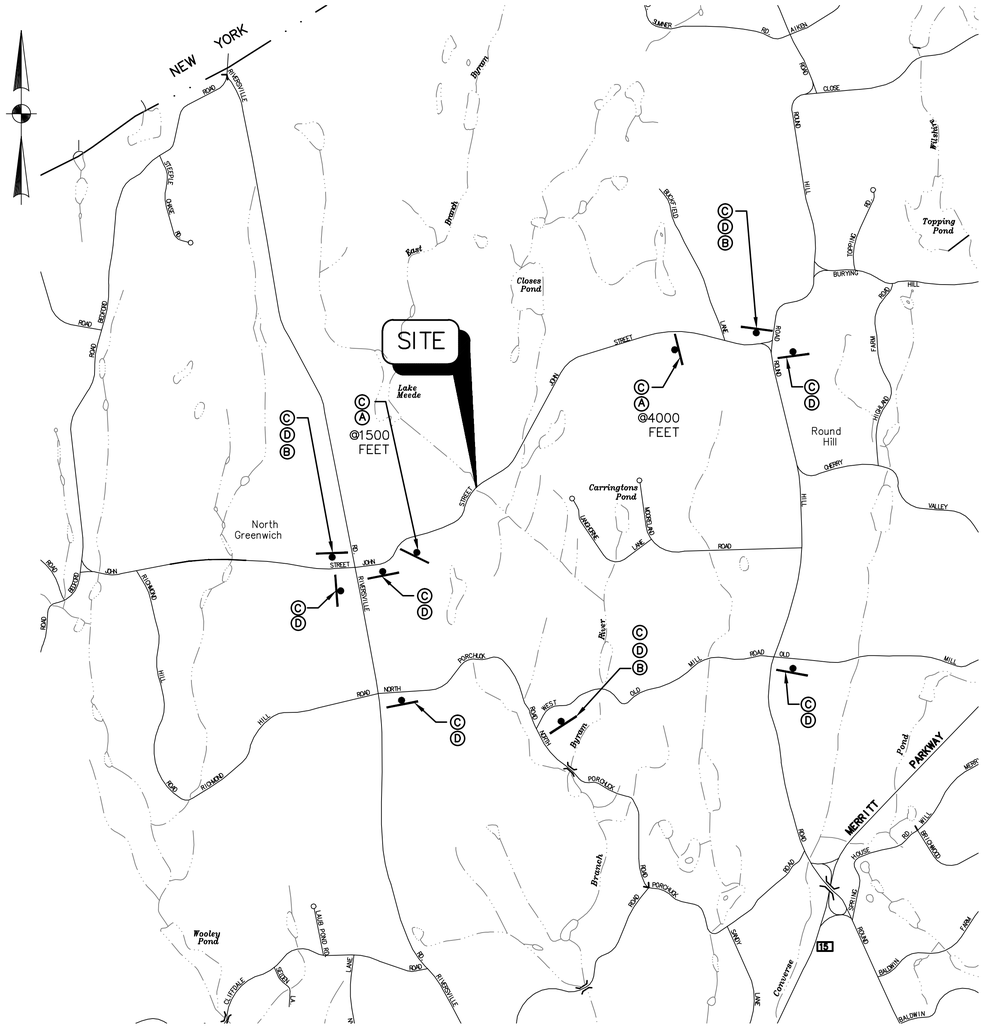

DETOUR PLAN

SCALE: 1"=1000'

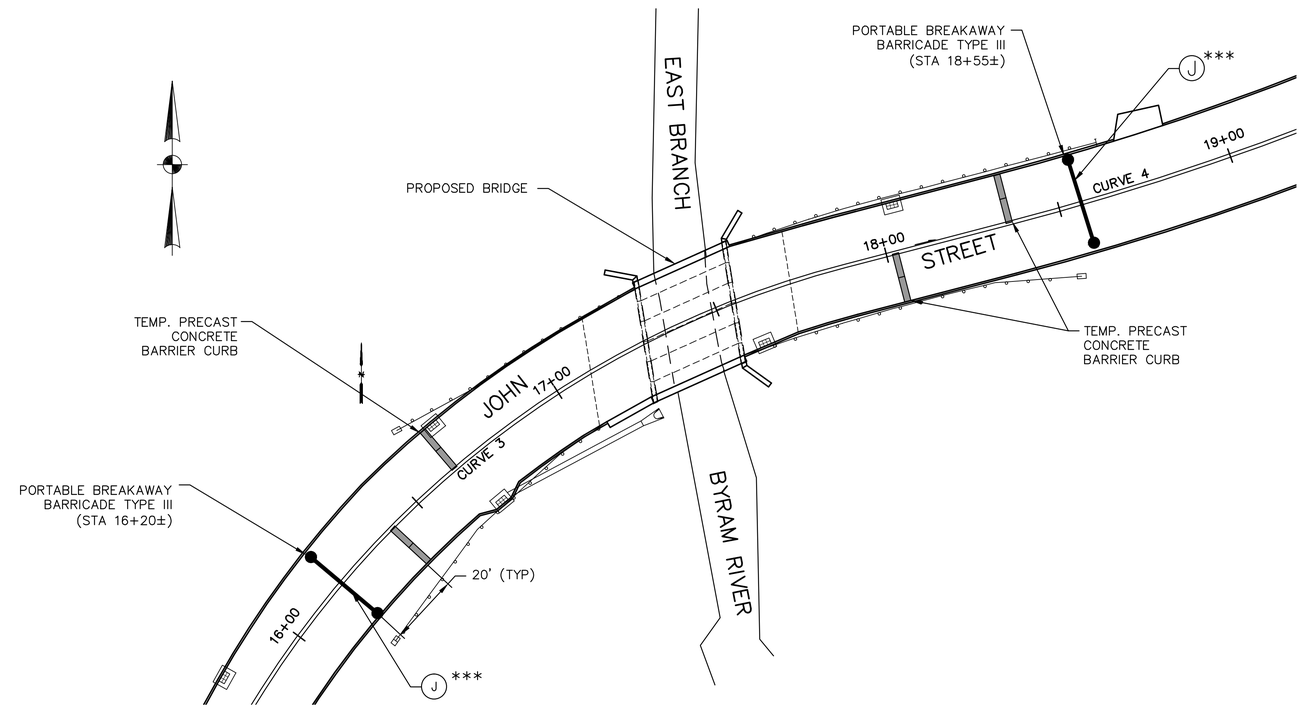

BARRIER PLAN

SCALE: 1"=20'

PLAN			
NOTEBOOK NO.	Surveyed	Plotted	Traced
	Designed	New Const. Noted	Top Field Chk. Noted

BY	DATE	CHECKED BY	DATE

REVISIONS

NO.	DATE	DESCRIPTION	REV. SHEET NO.

CADD:061048A10-009-MPT001-REV.dwg REVISED DATE: Jan 30, 2013

F.H.W.A. REGION NO.	STATE	TOWN	FED. AID PROJ. NO.	PROJ. NO.	YEAR	ROUTE NO.	SHEET NO.	TOTAL SHEETS
1	CONN.	GREENWICH	N/A	9056-0055	2013	T.R.	14	29

REPLACEMENT OF JOHN STREET BRIDGE NO. 056055
OVER EAST BRANCH BYRAM RIVER
CROSS SECTIONS STA. 14+50 – 15+00

15+00

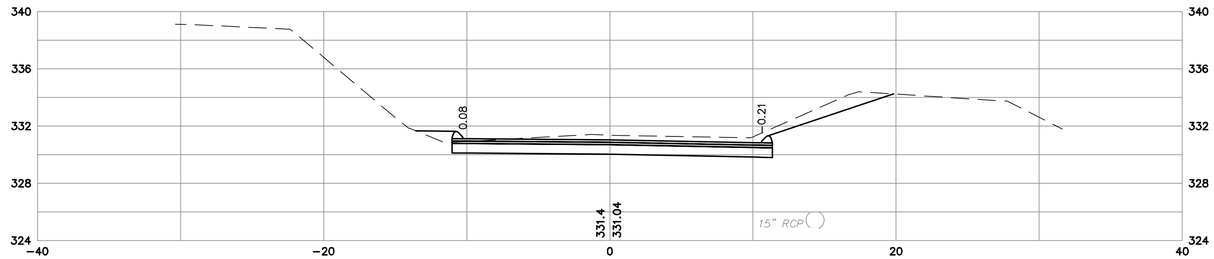

14+86.36

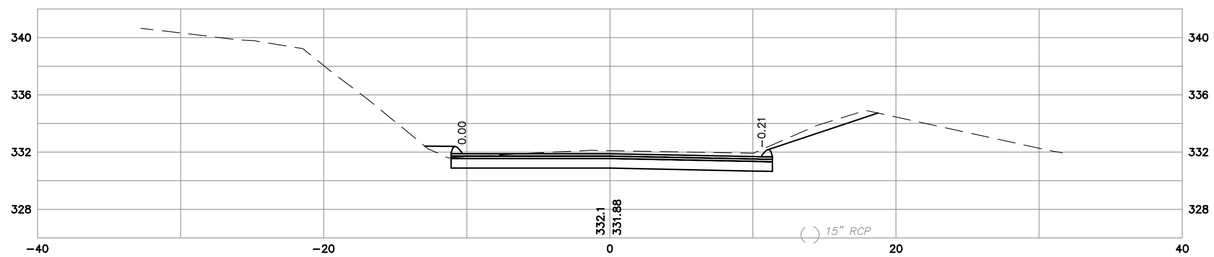

14+51.27

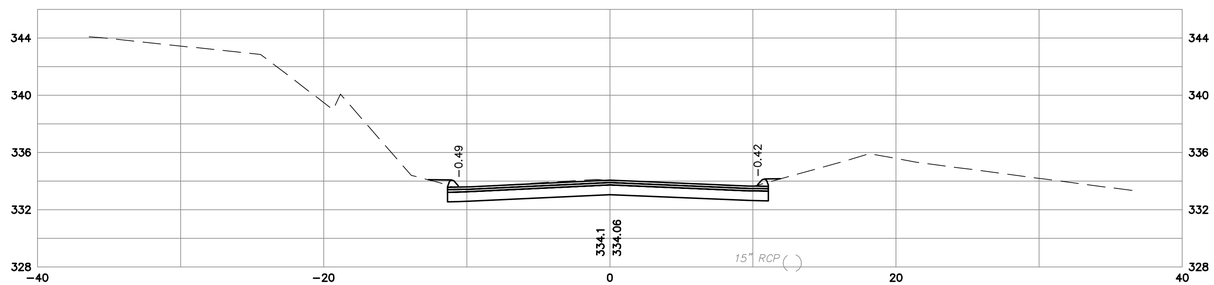

14+50

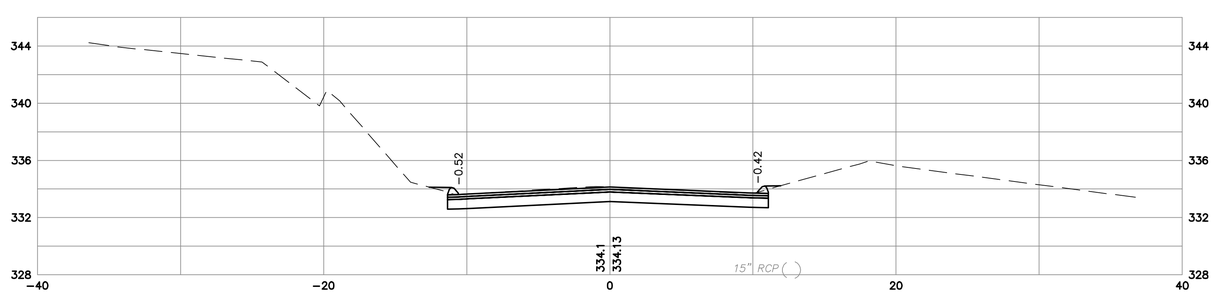

PLAN		BY	DATE	BY	DATE	CHECKED BY	DATE
NOTEBOOK NO. ____	Surveyed ____						
	Plotted ____						
	Traced ____						
	Designed ____						
	New Const. Noted ____						
	Tsp. Field Chk. Noted ____						

REVISIONS			
NO.	DATE	DESCRIPTION	REV. SHEET NO.

F.H.W.A. REGION NO.	STATE	TOWN	FED. AID PROJ. NO.	PROJ. NO.	YEAR	ROUTE NO.	SHEET NO.	TOTAL SHEETS
1	CONN.	GREENWICH	N/A	9056-0055	2013	T.R.	15	29

REPLACEMENT OF JOHN STREET BRIDGE NO. 056055
OVER EAST BRANCH BYRAM RIVER
CROSS SECTIONS STA. 15+21.45 – 15+78

15+78

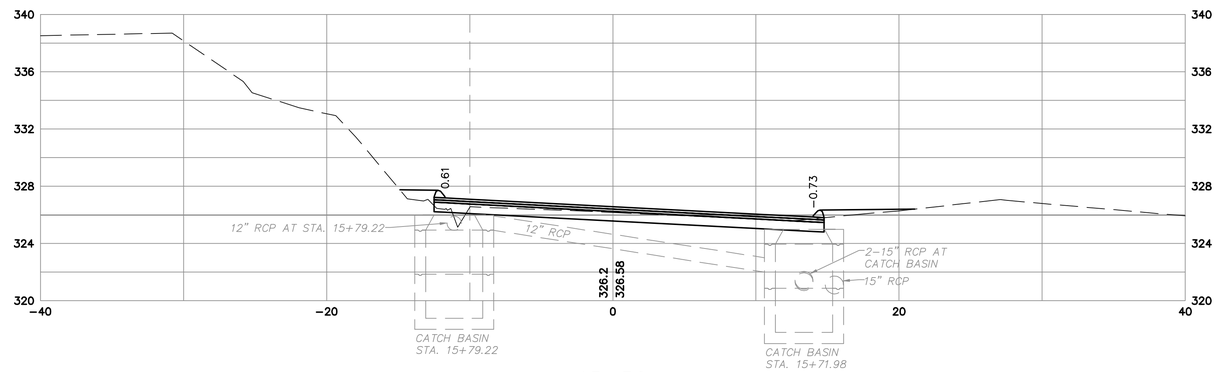

15+50

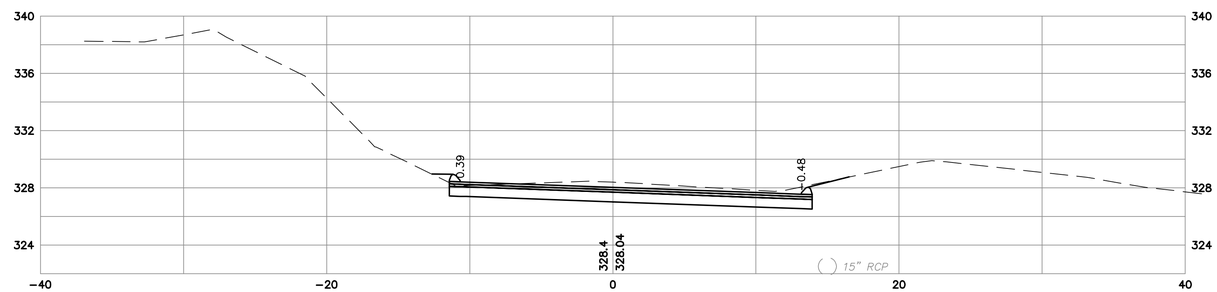

15+21.45

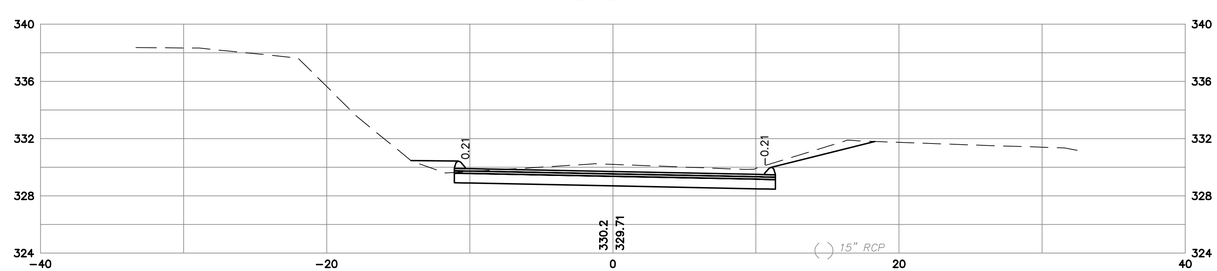

PLAN	BY	DATE	CHECKED BY	DATE
NOTEBOOK NO. ____	Surveyed ____ Plotted ____ Traced ____ Designed ____ New Const. Noted ____ Top Field Chk. Noted ____			

REVISIONS			
NO.	DATE	DESCRIPTION	REV. SHEET NO.

F.H.W.A. REGION NO.	STATE	TOWN	FED. AID PROJ. NO.	PROJ. NO.	YEAR	ROUTE NO.	SHEET NO.	TOTAL SHEETS
1	CONN.	GREENWICH	N/A	9056-0055	2013	T.R.	16	29

REPLACEMENT OF JOHN STREET BRIDGE NO. 056055 OVER EAST BRANCH BYRAM RIVER

CROSS SECTIONS STA. 16+00 – 16+65

16+65

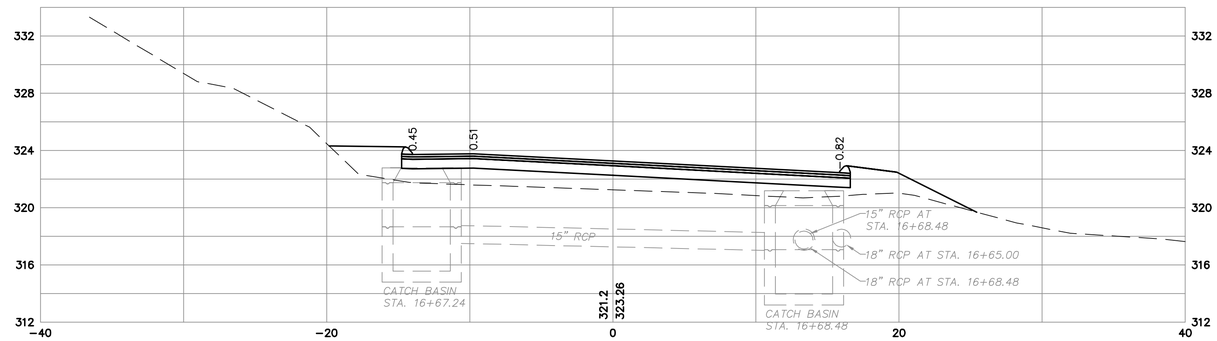

16+50

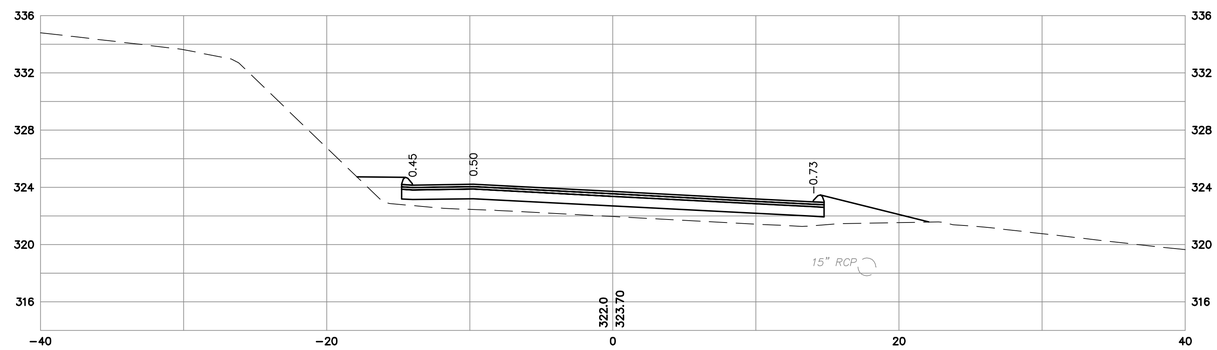

16+00

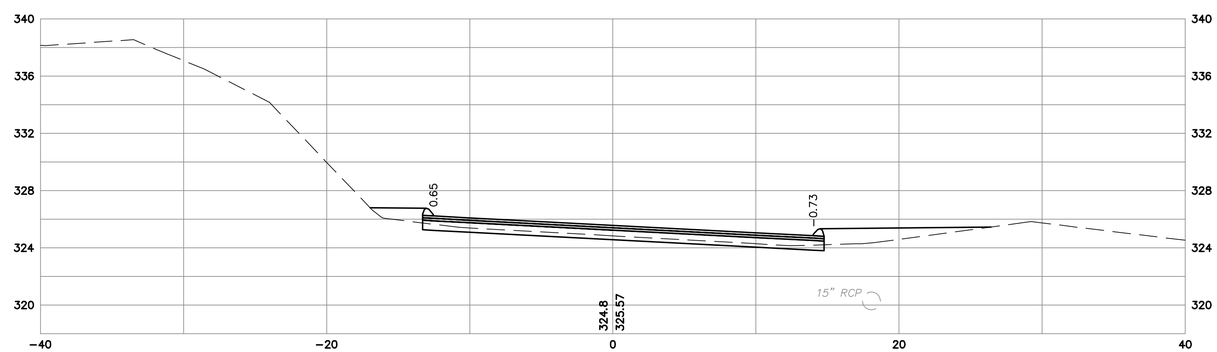

PLAN					
NOTEBOOK NO. ____	Surveyed ____	Plotted ____	Traced ____	Designed ____	New Const. Noted ____
	Top Field Chk. Noted ____				

BY	DATE	BY	DATE	CHECKED BY	DATE

REVISIONS

NO.	DATE	DESCRIPTION	REV. SHEET NO.

F.H.W.A. REGION NO.	STATE	TOWN	FED. AID PROJ. NO.	PROJ. NO.	YEAR	ROUTE NO.	SHEET NO.	TOTAL SHEETS
1	CONN.	GREENWICH	N/A	9056-0055	2013	T.R.	17	29

REPLACEMENT OF JOHN STREET BRIDGE NO. 056055 OVER EAST BRANCH BYRAM RIVER

CROSS SECTIONS STA. 17+00 – 17+60

17+60

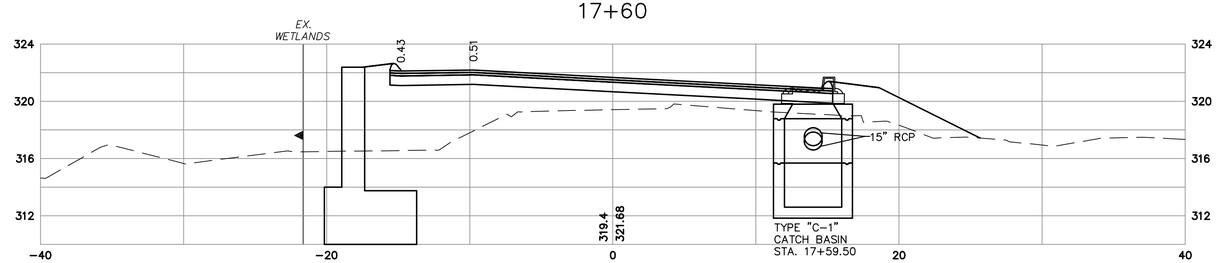

17+50

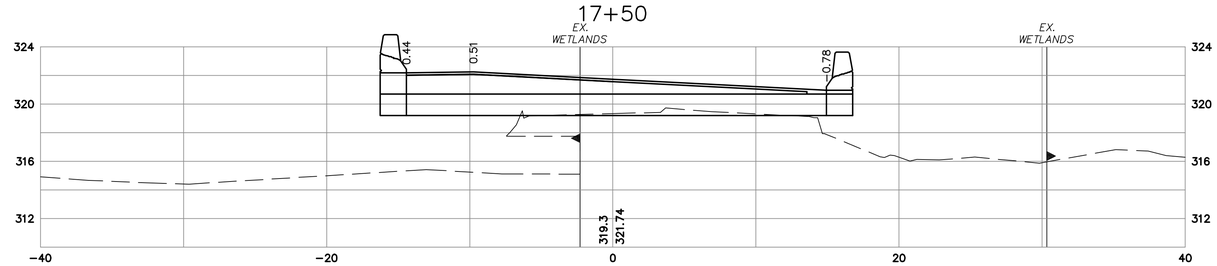

17+15

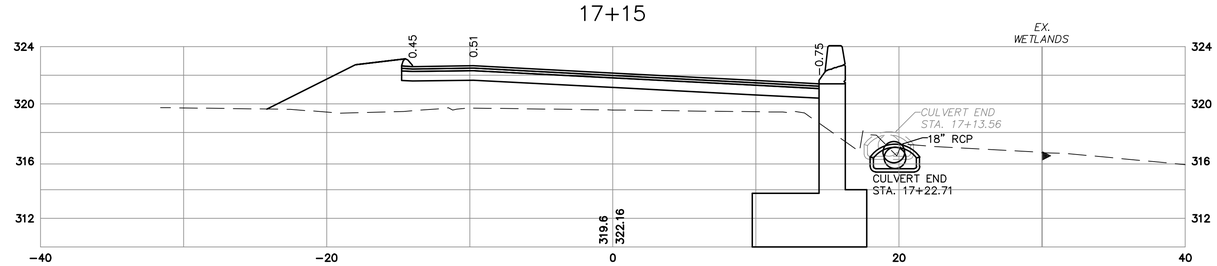

17+00

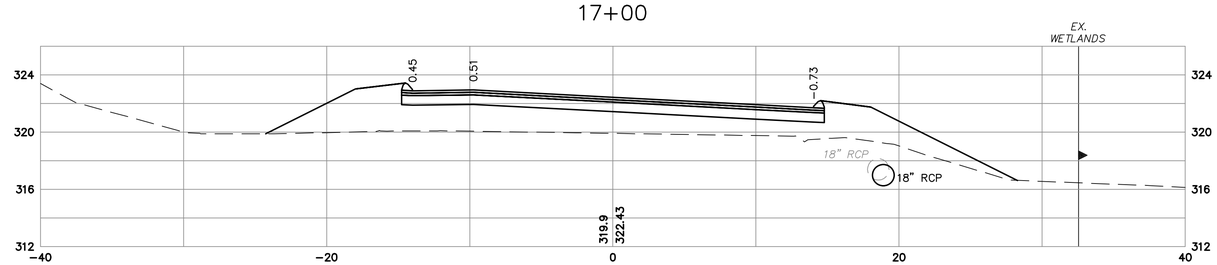

PLAN					
NOTEBOOK NO. ____	Surveyed ____				
	Plotted ____				
	Traced ____				
	Designed ____				
	New Const. Noted ____				
	Top Field Chk. Noted ____				

REVISIONS			
NO.	DATE	DESCRIPTION	REV. SHEET NO.

F.H.W.A. REGION NO.	STATE	TOWN	FED. AID PROJ. NO.	PROJ. NO.	YEAR	ROUTE NO.	SHEET NO.	TOTAL SHEETS
1	CONN.	GREENWICH	N/A	9056-0055	2013	T.R.	18	29

REPLACEMENT OF JOHN STREET BRIDGE NO. 056055
OVER EAST BRANCH BYRAM RIVER
CROSS SECTIONS STA. 18+00 – 18+50

18+50

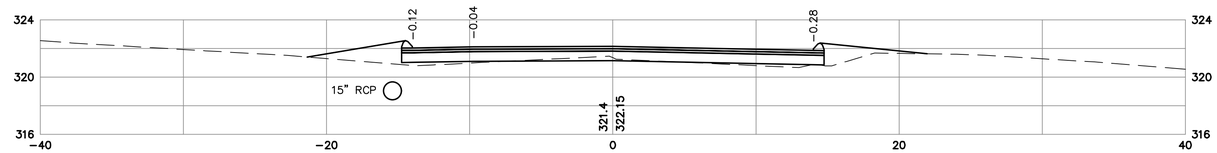

18+44.03

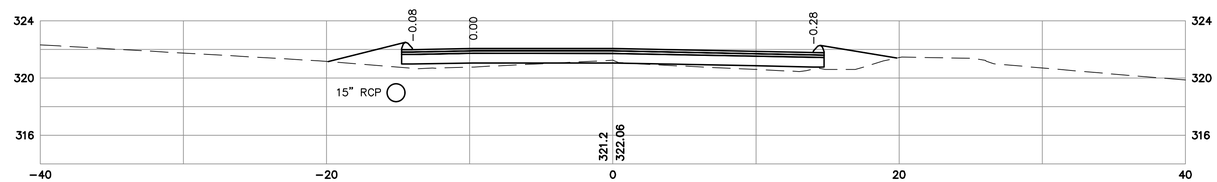

18+10.71

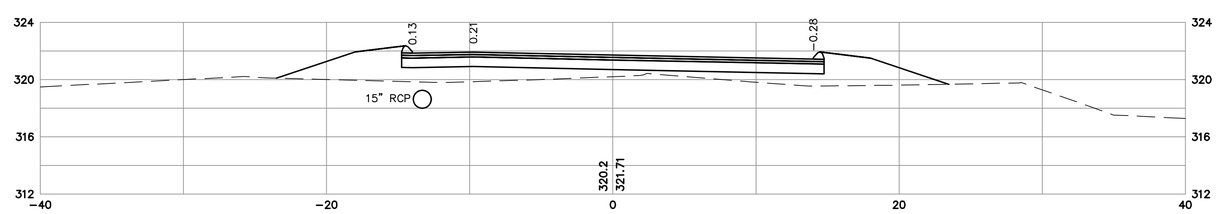

18+00

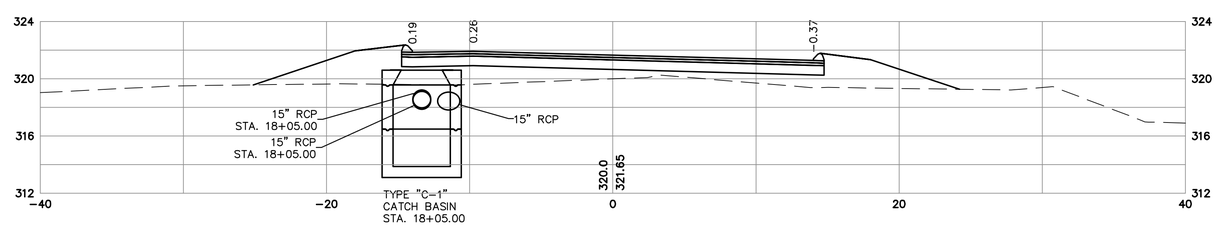

PLAN			
NOTEBOOK NO. ____	Surveyed ____		
	Plotted ____		
	Traced ____		
	Designed ____	BY	DATE
	New Const. Noted ____		
	Top Field Chk. Noted ____	CHECKED BY	DATE

REVISIONS			
NO.	DATE	DESCRIPTION	REV. SHEET NO.

F.H.W.A. REGION NO.	STATE	TOWN	FED. AID PROJ. NO.	PROJ. NO.	YEAR	ROUTE NO.	SHEET NO.	TOTAL SHEETS
1	CONN.	GREENWICH	N/A	9056-0055	2013	T.R.	19	29

REPLACEMENT OF JOHN STREET BRIDGE NO. 056055 OVER EAST BRANCH BYRAM RIVER

CROSS SECTIONS STA. 18+77.35 – 20+00

20+00

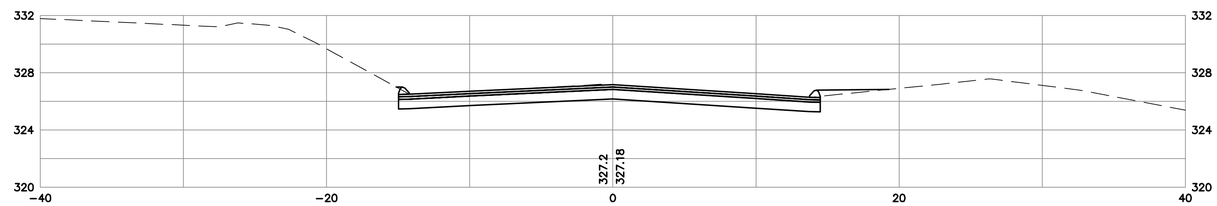

19+50

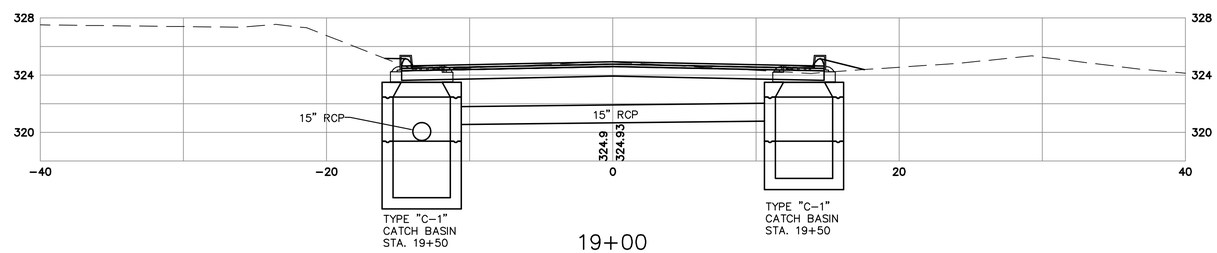

19+00

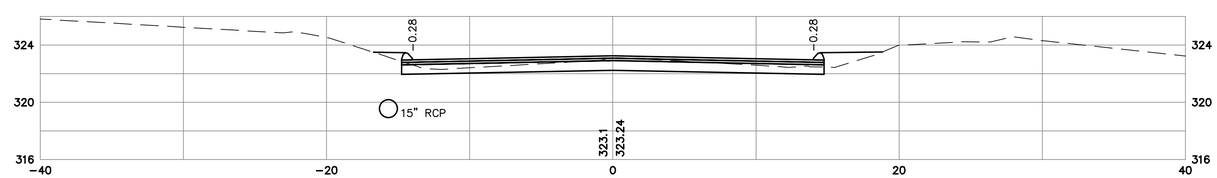

18+77.35

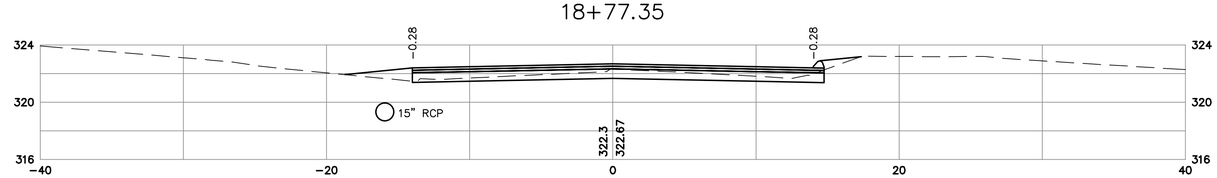

PLAN	BY	DATE	CHECKED BY	DATE
NOTEBOOK NO. ____	Surveyed ____			
	Plotted ____			
	Traced ____			
	Designed ____			
	New Const. Noted ____			
	Top Field Chk. Noted ____			

REVISIONS			
NO.	DATE	DESCRIPTION	REV. SHEET NO.

F.H.W.A. REGION	STATE	TOWN	FED. AID PROJ. NO.	PROJ. NO.	YEAR	ROUTE NO.	SHEET NO.	TOTAL SHEETS
1	CONN	GREENWICH	N/A	9056-0055	2013	TR	20	29

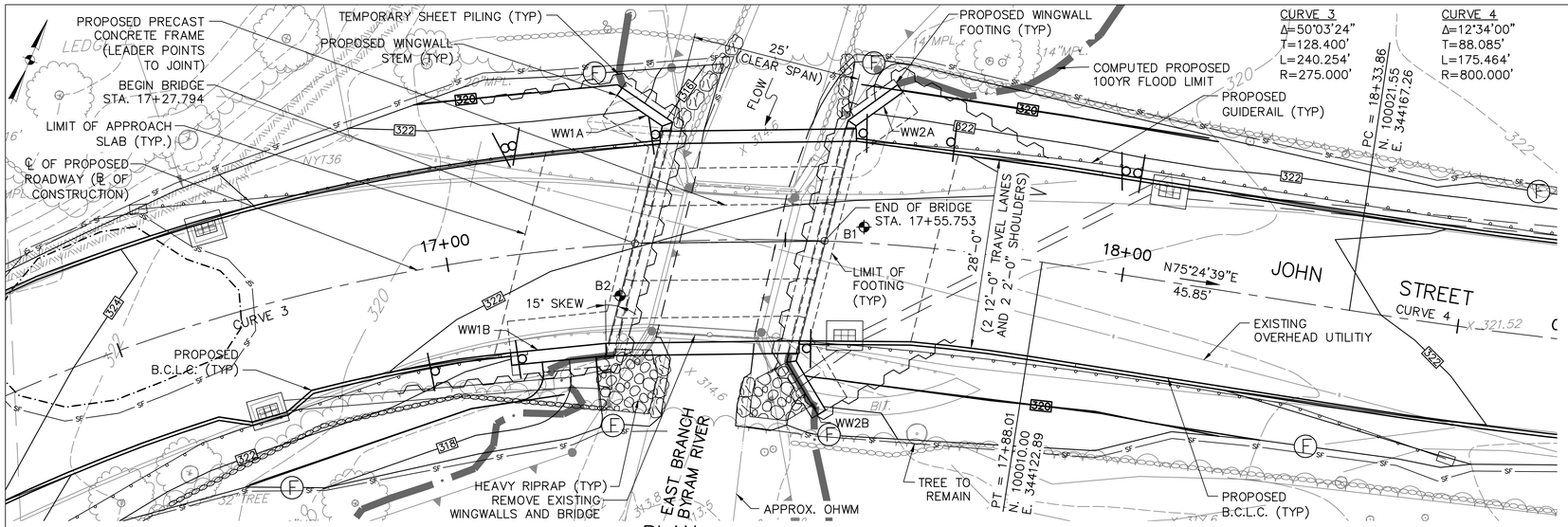

PLAN

SCALE: 1" = 10'-0"

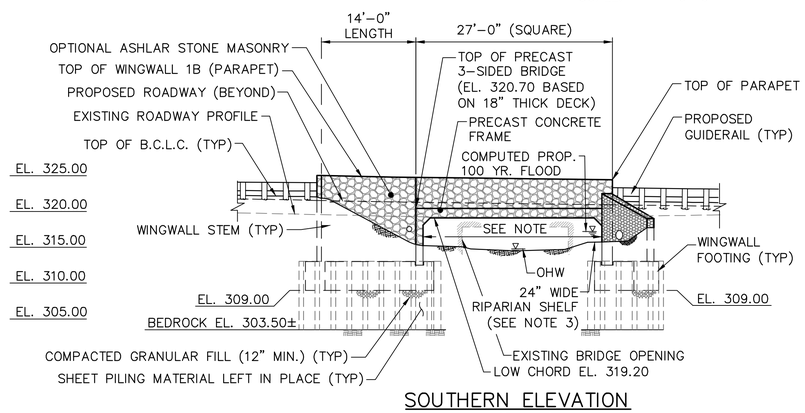

SOUTHERN ELEVATION

SCALE: 1" = 10'

NOTES:

1. LOW POINT OF ROADWAY SURFACE ON BRIDGE IS LOCATED AT SOUTHEAST CORNER OF BRIDGE, EL. 320.95.

2. PARAPET CONFIGURATION SHOWN IS FOR PARAPET WITH OPTIONAL STONE FORM LINER FACING (42" PARAPET).

3. 24" WIDE RIPARIAN SHELF SHALL BE PROVIDED ALONG THE EAST LEG OF THE PRECAST CONCRETE FRAME. 12" MINIMUM DEPTH OF NATURAL STREAM BED MATERIAL.

4. COMPUTED PROPOSED 100 YEAR FLOOD EL. 318.3.

HYDRAULIC DATA

DRAINAGE AREA	1.69 sq.mi.
DESIGN FREQUENCY	100 year
DESIGN DISCHARGE	430 cfs
AVERAGE DAILY FLOW ELEVATION	315.5 ft (OBSV. 12/28/11)
UPSTREAM DESIGN WATER SURFACE ELEV.	318.3 ft
DOWNSTREAM DESIGN WATER SURFACE ELEV.	317.2 ft
MAXIMUM SCOUR ELEVATION FREQUENCY DISCHARGE	309.3 ft 500 year 620 cfs
WORST CASE SCOUR SUB-STRUCTURE UNIT	WITHIN THE LIMITS OF FOOTINGS, BOTH ABUTMENTS

INSPECTION OF FIELD WELDS

METHODS	UNIT	QUANTITY
ULTRASONIC	INCH	0
MAGNETIC PARTICLE	FEET	0

CONCRETE DISTRIBUTION

SUPERSTRUCTURE	35	C.Y.*
SUBSTRUCTURE	73	C.Y.**
FOOTINGS	90	C.Y.
TOTAL	198	C.Y.

*CONCRETE FOR PARAPETS AND CONCRETE FILL ONLY. FRAMES ARE PRECAST CONCRETE.

**INCLUDES APPROACH SLAB AND APPROACH SLAB SEATS

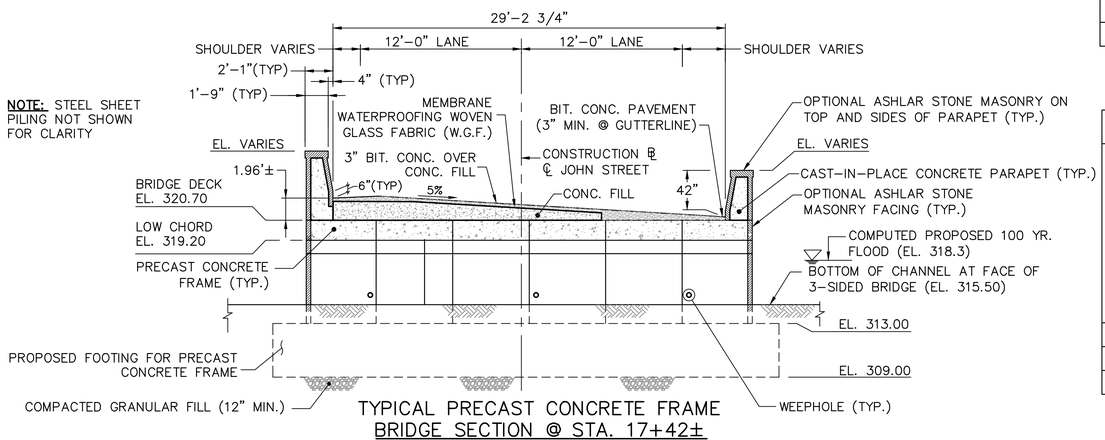

TYPICAL PRECAST CONCRETE FRAME BRIDGE SECTION @ STA. 17+42±

SCALE: 3/16"=1'-0"

NOTICE TO BRIDGE INSPECTORS

THE DEPARTMENTS BRIDGE SAFETY PROCEDURES REQUIRE THIS BRIDGE TO BE INSPECTED FOR, BUT NOT LIMITED TO, ALL APPROPRIATE COMPONENTS INDICATED IN THE GOVERNING MANUALS FOR BRIDGE INSPECTION. ATTENTION MUST BE GIVEN TO INSPECTING THE FOLLOWING SPECIAL COMPONENTS AND DETAILS. (THE LISTING FOR COMPONENTS FOR SPECIFIC ATTENTION SHALL NOT BE CONSTRUED TO REDUCE THE IMPORTANCE OF INSPECTION OF ANY OTHER COMPONENT OF THIS STRUCTURE.) THE FREQUENCY OF INSPECTION OF THIS STRUCTURE SHALL BE IN ACCORDANCE WITH THE GOVERNING MANUALS FOR BRIDGE INSPECTION, UNLESS OTHERWISE DIRECTED BY THE MANAGER OF BRIDGE SAFETY AND EVALUATION.

COMPONENT OR DETAIL	BRIDGE SHEET REFERENCE
PRECAST CONCRETE FRAMES	6

THE INFORMATION, INCLUDING ESTIMATED QUANTITIES OF WORK SHOWN ON THESE SHEETS IS BASED ON LIMITED INVESTIGATIONS AND IS IN NO WAY WARRANTED TO INDICATE THE TRUE CONDITIONS OR THE ACTUAL QUANTITIES OR DISTRIBUTION OF QUANTITIES OF WORK WHICH WILL BE REQUIRED.

GENERAL NOTES

SPECIFICATIONS: CONNECTICUT DEPARTMENT OF TRANSPORTATION FORM 816 (2004), SUPPLEMENTAL SPECIFICATIONS DATED (07/09) AND SPECIAL PROVISIONS.

DESIGN SPECIFICATIONS: STANDARD SPECIFICATIONS FOR HIGHWAY BRIDGES 17TH EDITION, (AASHTO-2002), AS SUPPLEMENTED BY THE CONNECTICUT DEPARTMENT OF TRANSPORTATION BRIDGE DESIGN MANUAL (2003).

ALLOWABLE DESIGN STRESSES:
CLASS "A" CONCRETE.....BASED ON f'c = 3000 PSI CLASS
CLASS "F" CONCRETE.....BASED ON f'c = 4000 PSI CLASS

REINFORCEMENT
(ASTM A615 GRADE 60) fy = 60,000 PSI

LIVE LOAD: HS-20

FUTURE PAVEMENT ALLOWANCE: NONE

BITUMINOUS CONCRETE OVERLAY THIS SHALL CONSIST OF TWO LIFTS. THE FIRST SHALL BE BITUMINOUS CONCRETE – HMA S0.375 (THICKNESS VARIES – 1" MINIMUM) AND THE SECOND SHALL BE BITUMINOUS CONCRETE – HMA S0.5 (2" THICK).

FOUNDATION PRESSURES: THE VARIOUS GROUP LOADINGS NOTED ON THE SUBSTRUCTURE PLAN SHEETS REFER TO THE GROUP LOADS AS GIVEN IN THE AASHTO STANDARD SPECIFICATIONS FOR HIGHWAY BRIDGES.

DIMENSIONS: WHEN DECIMAL DIMENSIONS ARE GIVEN TO LESS THAN THREE DECIMAL PLACES, THE OMITTED DIGITS SHALL BE ASSUMED TO BE ZEROS.

REMAIN-IN-PLACE FORMS: THE USE OF REMAIN-IN-PLACE FORMS ON THIS STRUCTURE IS NOT ALLOWED.

CLASS "A" CONCRETE:
CLASS "A" CONCRETE SHALL BE USED FOR THE WINGWALLS AND FOOTINGS FOR THE PRECAST CONCRETE FRAMES.

CLASS "F" CONCRETE: SHALL BE USED FOR THE PARAPETS, APPROACH SLABS, APPROACH SLAB SEATS, AND CONCRETE FILL.

JOINT SEAL:
SEE SPECIAL PROVISIONS.

EXPOSED EDGES: EXPOSED EDGES OF CONCRETE SHALL BE BEVELED 1" X 1" UNLESS DIMENSIONED OTHERWISE.

CONCRETE COVER: ALL REINFORCEMENT SHALL HAVE TWO INCHES OF COVER UNLESS DIMENSIONED OTHERWISE.

REINFORCEMENT: ALL REINFORCEMENT SHALL BE ASTM A615 GRADE 60.

EPOXY COATED REINFORCING BARS: ALL REINFORCEMENT IN THE PRECAST CONCRETE FRAMES SHALL BE EPOXY COATED UNLESS OTHERWISE NOTED. THESE BARS SHALL BE INCLUDED IN THE PAY ITEM FOR "PRECAST CONCRETE FRAMES". ALL REINFORCEMENT IN THE CAST-IN-PLACE PARAPETS, APPROACH SLABS, APPROACH SLAB SEATS, AND CONCRETE FILL SHALL BE EPOXY COATED AND SHALL BE INCLUDED IN THE PAY ITEM FOR "DEFORMED STEEL BARS (EPOXY COATED)."

PREFORMED EXPANSION JOINT FILLER: THE COST OF FURNISHING AND INSTALLING PREFORMED EXPANSION JOINT FILLER SHALL BE INCLUDED IN THE COST OF THE ITEM "CLASS 'A' CONCRETE".

CONSTRUCTION JOINTS: CONSTRUCTION JOINTS, OTHER THAN THOSE SHOWN ON THE PLANS, WILL NOT BE PERMITTED WITHOUT THE PRIOR APPROVAL OF THE ENGINEER.

PRECAST CONCRETE FRAMES: SEE SPECIAL PROVISIONS

TEMPORARY SHEET PILING: TEMPORARY SHEET PILING SHALL BE PAID FOR UNDER STRUCTURE EXCAVATION-EARTH (COMPLETE) AND STRUCTURE EXCAVATION-ROCK (COMPLETE)

SHEET PILING MATERIAL LEFT IN PLACE: SHEET PILING MATERIAL LEFT IN PLACE SHALL BE PAID FOR UNDER STRUCTURE EXCAVATION-EARTH (COMPLETE) AND STRUCTURE EXCAVATION-ROCK (COMPLETE)

NO.	DATE	DESCRIPTION

REVISIONS

TOWN OF GREENWICH

REPLACEMENT OF BRIDGE NO. 056055

JOHN STREET
OVER
EAST BRANCH BYRAM RIVER

BRIDGE GENERAL PLAN 1

ENGINEER FUSS & O'NEILL INC. CONSULTING ENGINEERS
DESIGNER P.D.B. DRAFTER R.F.R. CHECKER P.D.B.
APPROVED DATE
STRUCTURE NO. 56-055
BRIDGE LOG NO. 056055
STRUCTURE SHEET NO. 1 OF 10

CADD:20061048A10STR001-GP1.dwg PLOTTED DATE: Jan 30, 2013

F.H.W.A. REGION	STATE	TOWN	FED. AID PROJ. NO.	PROJ. NO.	YEAR	ROUTE NO.	SHEET NO.	TOTAL SHEETS
1	CONN	GREENWICH	N/A	9056-0055	2013	TR	21	29

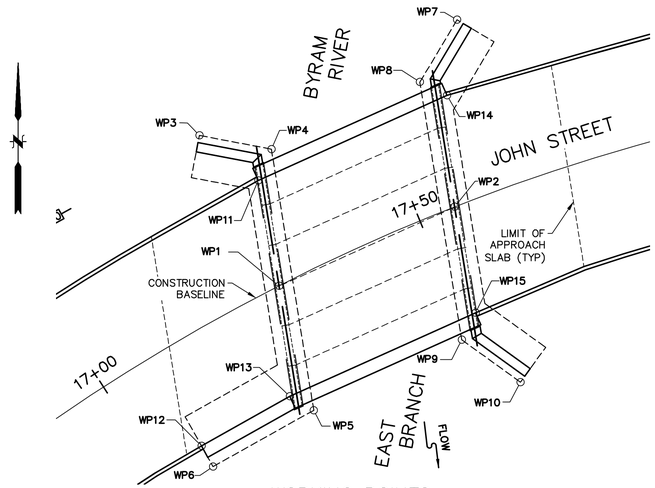

WORKING POINTS
N.T.S

WORKING POINTS

WP	STATION	OFFSET	NORTHING	EASTING
WP1	17+28.32	ON ℄	99988.836	344067.198
WP2	17+55.24	ON ℄	99999.876	344091.741
WP3	17+32.65	23.77 LT.	100009.845	344056.069
WP4	17+35.59	17+59 LT.	100007.931	344066.130
WP5	17+24.51	17.68 RT.	99971.447	344072.065
WP6	17+07.27	17.57 RT.	99963.571	344057.990
WP7	17+64.29	24.36 LT.	100025.995	344092.075
WP8	17+56.96	17.98 LT.	100017.279	344086.886
WP9	17+48.98	17.60 RT.	99981.289	344092.736
WP10	17+54.82	26.17 RT.	99975.373	344100.947
WP11	17+32.22	14.47 LT.	100003.564	344064.298
WP12	17+07.40	14.24 RT.	99966.473	344056.365
WP13	17+22.34	14.39 RT.	99973.388	344068.722
WP14	17+52.39	14.84 RT.	100015.435	344090.675
WP15	17+59.23	14.88 LT.	99985.059	344094.655

TABLE OF QUANTITIES

PAY ITEM	UNIT	QTY.
STRUCTURE EXCAVATION–EARTH (COMPLETE)	C.Y.	275
STRUCTURE EXCAVATION–ROCK (COMPLETE)	C.Y.	33
TURBIDITY CONTROL CURTAINS	L.F.	35
COMPACTED GRANULAR FILL	C.Y.	32
CONTROLLED LOW STRENGTH MATERIAL	C.Y.	1
PERVIOUS STRUCTURE BACKFILL	C.Y.	135
HMA S0.5	TON	25
HMA S0.375	TON	28
REMOVAL OF SUPERSTRUCTURE	L.S.	1
4" POLYVINYL CHLORIDE PLASTIC PIPE	L.F.	8
PRECAST CONCRETE FRAME	L.S.	1
CLASS "A" CONCRETE	C.Y.	108
CLASS "F" CONCRETE	C.Y.	90
1/2" PREFORMED EXPANSION JT. FILLER FOR BRIDGES	S.F.	68
1" PREFORMED EXPANSION JT. FILLER FOR BRIDGES	S.F.	180
ASPHALTIC PLUG EXPANSION JOINT SYSTEM	L.F.	62
DEFORMED STEEL BARS	LB	9750
DEFORMED STEEL BARS – EPOXY COATED	LB	13150
DISPOSAL OF LEAD DEBRIS	BBL	1
LEAD HEALTH PROTECTION PROGRAM (LHPP)	L.S.	1
ASHLAR STONE MASONRY	S.F.	1300
CONCRETE CYLINDER CURING BOX	EA.	1
MEMBRANE WATERPROOFING (WOVEN GLASS FABRIC)	S.Y.	218
DAMPPROOFING	S.Y.	87
BAGGED STONE	BAG	40
REMOVAL OF EXISTING MASONRY	C.Y.	29

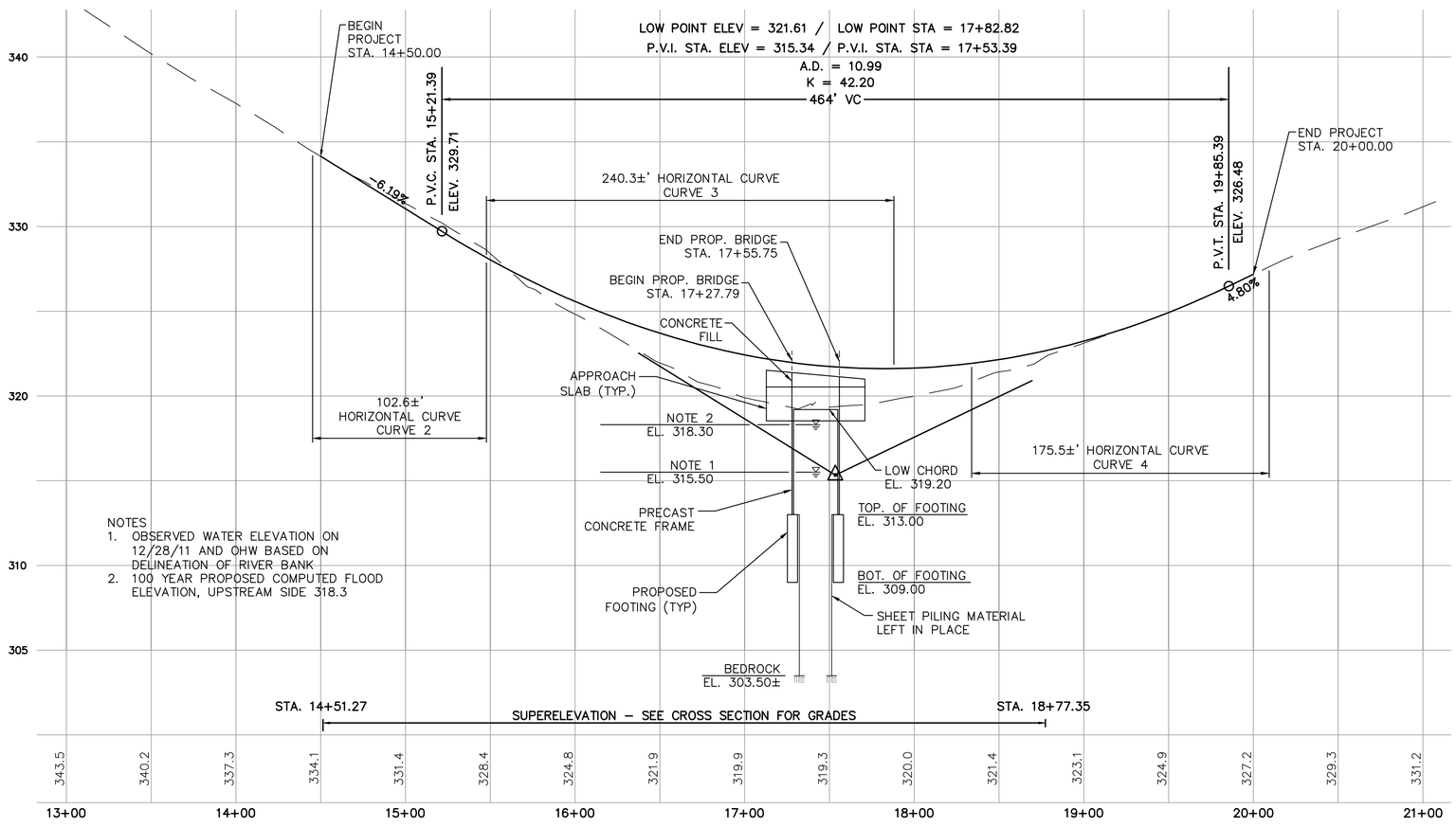

NOTES
1. OBSERVED WATER ELEVATION ON 12/28/11 AND OHW BASED ON DELINEATION OF RIVER BANK
2. 100 YEAR PROPOSED COMPUTED FLOOD ELEVATION, UPSTREAM SIDE 318.3

PROFILE
HORIZ: SCALE: 1" = 40'-0"
VERT: SCALE: 1" = 4'-0"

THE INFORMATION, INCLUDING ESTIMATED QUANTITIES OF WORK SHOWN ON THESE SHEETS IS BASED ON LIMITED INVESTIGATIONS AND IS IN NO WAY WARRANTED TO INDICATE THE TRUE CONDITIONS OR THE ACTUAL QUANTITIES OR DISTRIBUTION OF QUANTITIES OF WORK WHICH WILL BE REQUIRED.

NO.	DATE	DESCRIPTION

REVISIONS

TOWN OF GREENWICH

REPLACEMENT OF BRIDGE NO. 056055

JOHN STREET
OVER
EAST BRANCH BYRAM RIVER

BRIDGE GENERAL PLAN 2

ENGINEER FUSS & O'NEILL INC. CONSULTING ENGINEERS
DESIGNER P.D.B. DRAFTER R.F.R. CHECKER P.D.B.
APPROVED DATE
STRUCTURE NO. 56-055
BRIDGE LOG NO. 056055
STRUCTURE SHEET NO. 2 OF 10

CADD:20061048A10STR002-GP2.dwg PLOTTED DATE: Jan 30, 2013

F.H.W.A. REGION	STATE	TOWN	FED. AID PROJ. NO.	PROJ. NO.	YEAR	ROUTE NO.	SHEET NO.	TOTAL SHEETS
1	CONN	GREENWICH	N/A	9056-0055	2013	TR	22	29

CLARENCE WELTI ASSOC., INC.
P.O. BOX 397
GLASTONBURY, CONN 06033

CLIENT: FUSS & O'NEILL ENGINEERS

PROJECT NAME: JOHN STREET BRIDGE OVER BYRAM BROOK
LOCATION: GREENWICH, CT.

	AUGER	CASING	SAMPLER	CORE BAR	OFFSET
TYPE	HSA		SS	NQ	LINE & STA.
SIZE I.D.	3.75"		1.375"	2.0"	N. COORDINATE
HAMMER WT.			140 lbs		E. COORDINATE
HAMMER FALL			30"		

SURFACE ELEV.: HOLE NO. B-1
GROUND WATER OBSERVATIONS: AT 4.5 FT. AFTER 0 HOURS
AT FT. AFTER HOURS
START DATE 8/20/07
FINISH DATE 8/20/07

DEPTH	SAMPLE NO.	BLOWS/6"	DEPTH	A	STRATUM DESCRIPTION + REMARKS	ELEV.
0	1	5-3-3-4	0.50'-2.50'		ASPHALT	0.5
					BLACK OILY FINE-MED.SAND, LITTLE ASPHALT, TRACE SILT - FILL	
	2	8-13-60	2.50'-4.00'		DARK BR. FINE-MED. SAND, LITTLE SILT - FILL	2.0
					BOULDER	4.0
5					GREY/BR.FINE-MED. SAND, LITTLE SILT & GRAVEL	5.0
10	3	6-60	10.00'-11.00'			
					BOULDER	11.0
					GREY/BR. FINE-MED. SAND, LITTLE SILT, GRAVEL & DECOMPOSED ROCK FRAGMENTS	13.0
15						
	C1		18.50'-23.50'		CORED BEDROCK - SCHIST, GNIESS & QUARTZITE	18.5
20					RUN #1 18.5' - 23.5' RECOVERED 60" RQD=58%	
					BOTTOM OF BORING @ 23.5'	23.5
25						
30						
35						

LEGEND: COL. A:CORING TIME - MINUTES/FOOT
SAMPLE TYPE: D=DRY A=AUGER C=CORE U=UNDISTURBED PISTON S=SPLIT SPOON
PROPORTIONS USED: TRACE=0-10% LITTLE=10-20% SOME=20-35% AND=35-50%

DRILLER: D. BROMLEY
INSPECTOR:
SHEET 1 OF 1 HOLE NO. B-1

CLARENCE WELTI ASSOC., INC.
P.O. BOX 397
GLASTONBURY, CONN 06033

CLIENT: FUSS & O'NEILL ENGINEERS

PROJECT NAME: JOHN STREET BRIDGE OVER BYRAM BROOK
LOCATION: GREENWICH, CT.

	AUGER	CASING	SAMPLER	CORE BAR.	OFFSET
TYPE	HSA		SS	NQ	LINE & STA.
SIZE I.D.	3.75"		1.375"	2.0"	N. COORDINATE
HAMMER WT.			140 lbs		E. COORDINATE
HAMMER FALL			30"		

SURFACE ELEV.: HOLE NO. B-2
GROUND WATER OBSERVATIONS: AT 5.0 FT. AFTER 0 HOURS
AT FT. AFTER HOURS
START DATE 8/20/07
FINISH DATE 8/20/07

DEPTH	SAMPLE NO.	BLOWS/6"	DEPTH	A	STRATUM DESCRIPTION + REMARKS	ELEV.
0	1	3-4-3-4	0.00'-2.00'		ASPHALT	0.4
					BLACK OILY FINE-MED.SAND, LITTLE ASPHALT, TRACE SILT - FILL	
	2	5-6-5-2	2.00'-4.00'		BR. FINE-MED. SAND, SOME SILT, LITTLE GRAVEL - FILL	2.0
	3	3-3-8-10	4.00'-6.00'		BR.FINE-MED.SAND, LITTLE SILT & GRAVEL	4.0
5						
10	4	60	10.00'-10.25'		BR.FINE-MED.SAND, SOME SILT, LITTLE GRAVEL	10.0
					BOULDER	10.3
					GREY/BR.FINE-MED. SAND, SOME SILT, LITTLE GRAVEL & DECOMPOSED ROCK FRAGMENTS	13.0
15	5	60	15.00'-15.08'			
					GREY WEATHERED ROCK	16.0
	C1		18.00'-23.00'		CORED BEDROCK - SCHIST AND GNEISS	18.0
20					RUN #1 18.0' - 23.0' RECOVERED 60" RQD=93%	
					BOTTOM OF BORING @ 23.0'	23.0
25						
30						
35						

LEGEND: COL. A:CORING TIME - MINUTES/FOOT
SAMPLE TYPE: D=DRY A=AUGER C=CORE U=UNDISTURBED PISTON S=SPLIT SPOON
PROPORTIONS USED: TRACE=0-10% LITTLE=10-20% SOME=20-35% AND=35-50%

DRILLER: D. BROMLEY
INSPECTOR:
SHEET 1 OF 1 HOLE NO. B-2

THE INFORMATION, INCLUDING ESTIMATED QUANTITIES OF WORK SHOWN ON THESE SHEETS IS BASED ON LIMITED INVESTIGATIONS AND IS IN NO WAY WARRANTED TO INDICATE THE TRUE CONDITIONS OR THE ACTUAL QUANTITIES OR DISTRIBUTION OF QUANTITIES OF WORK WHICH WILL BE REQUIRED.

NO.	DATE	DESCRIPTION

REVISIONS

TOWN OF GREENWICH

REPLACEMENT OF BRIDGE NO. 056055
JOHN STREET
OVER
EAST BRANCH BYRAM RIVER

BORING LOGS

ENGINEER FUSS & O'NEILL INC. CONSULTING ENGINEERS
DESIGNER P.D.B. DRAFTER R.F.R. CHECKER P.D.B.
APPROVED DATE
STRUCTURE NO. 56-055
BRIDGE LOG NO. 056055
STRUCTURE SHEET NO. 3 OF 10

F.H.W.A. REGION	STATE	TOWN	FED. AID PROJ. NO.	PROJ. NO.	YEAR	ROUTE NO.	SHEET NO.	TOTAL SHEETS
1	CONN	GREENWICH	N/A	9056-0055	2013	TR	23	29

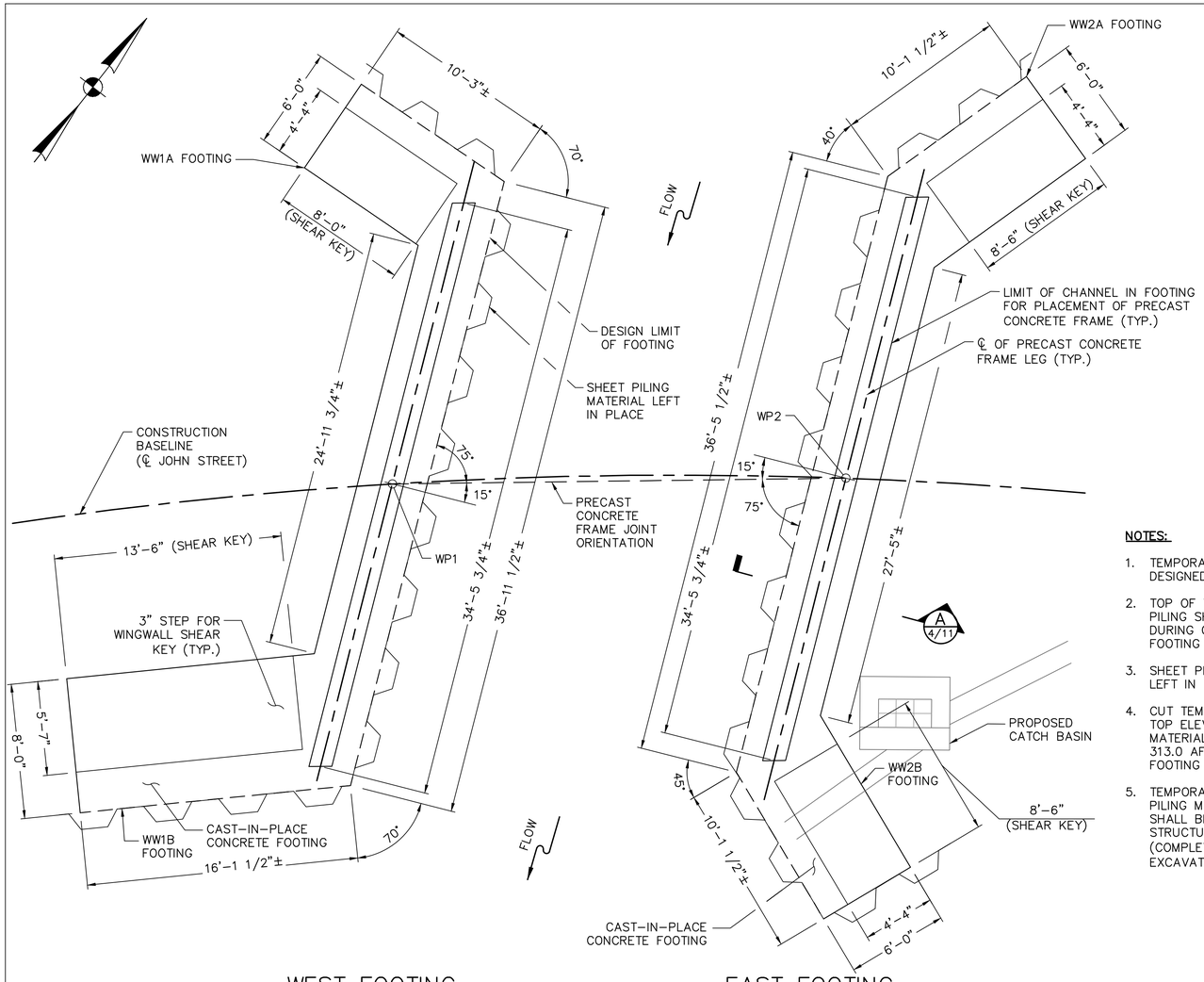

WEST FOOTING

EAST FOOTING

FOOTING PLAN

SCALE: 1/4"=1'-0"

NOTES:

THE CONTRACTOR SHALL COORDINATE THE HEIGHT OF THE PRECAST CONCRETE FRAME LEGS WITH THE PRECAST MANUFACTURER BASED ON THE MANUFACTURERS RECOMMENDED SHIM THICKNESS AND GROUT DETAILS IN ORDER TO MAINTAIN THE MINIMUM LOW CHORD ELEV. 319.2

* INDICATES ITEMS TO BE PAID FOR UNDER ITEM PRECAST CONCRETE FRAME

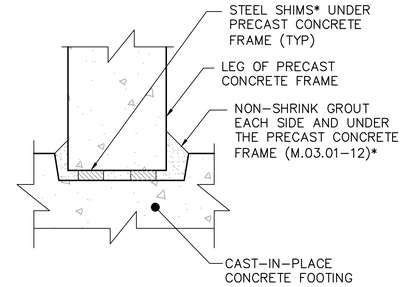

SHIM DETAIL

SCALE: 3/4"=1'-0"

NOTES:

1. TEMPORARY SHEET PILING SHALL BE DESIGNED BY THE CONTRACTOR.
2. TOP OF TEMPORARY STEEL SHEET PILING SHALL BE SET AT EL. 317.25 DURING CONSTRUCTION OF THE FOOTING AND SETTING FRAMES.
3. SHEET PILING MATERIAL SHALL BE LEFT IN PLACE AS INDICATED.
4. CUT TEMPORARY SHEET PILING SO TOP ELEVATION OF SHEET PILING MATERIAL LEFT IN PLACE IS AT EL. 313.0 AFTER CONSTRUCTION OF FOOTING AND FRAMES ARE SET.
5. TEMPORARY SHEET PILING AND SHEET PILING MATERIAL LEFT IN PLACE SHALL BE PAID FOR UNDER STRUCTURE EXCAVATION-EARTH (COMPLETE) AND STRUCTURE EXCAVATION-ROCK (COMPLETE).

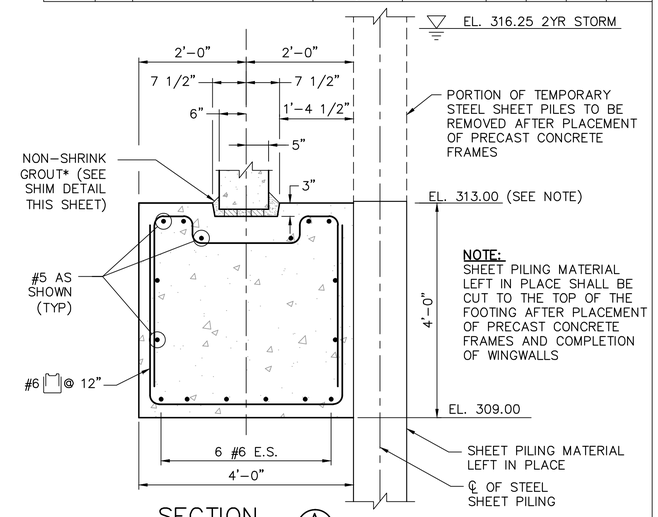

NOTE:
SHEET PILING MATERIAL LEFT IN PLACE SHALL BE CUT TO THE TOP OF THE FOOTING AFTER PLACEMENT OF PRECAST CONCRETE FRAMES AND COMPLETION OF WINGWALLS

SECTION A 4/11

SCALE: 3/4"=1'-0"

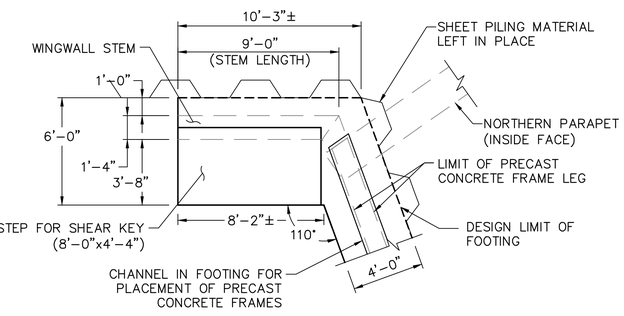

WW 1A

SCALE: 1/4"=1'-0"

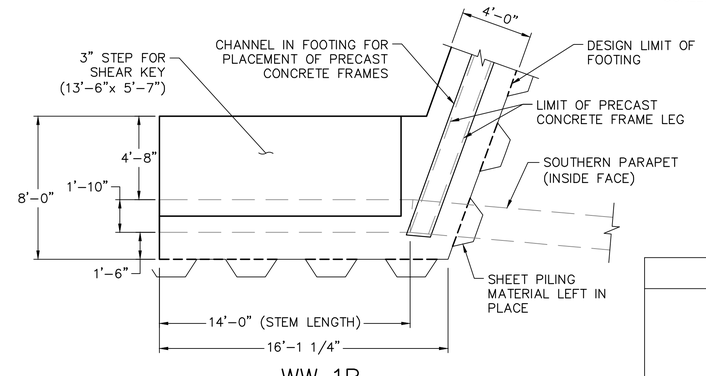

WW 1B

SCALE: 1/4"=1'-0"

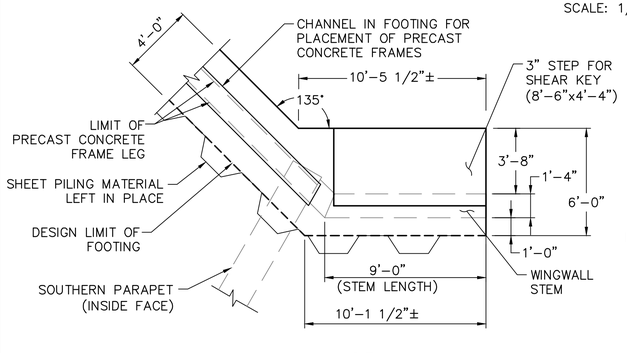

WW 2B

SCALE: 1/4"=1'-0"

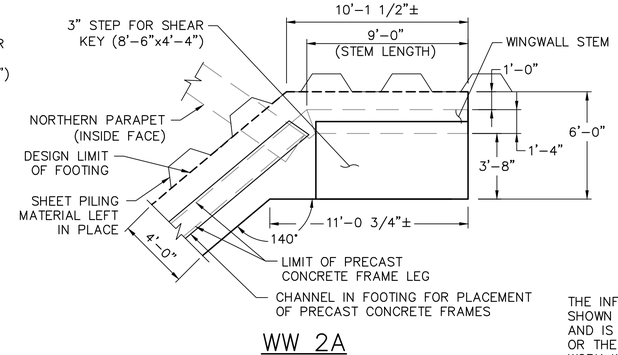

WW 2A

SCALE: 1/4"=1'-0"

THE INFORMATION, INCLUDING ESTIMATED QUANTITIES OF WORK SHOWN ON THESE SHEETS IS BASED ON LIMITED INVESTIGATIONS AND IS IN NO WAY WARRANTED TO INDICATE THE TRUE CONDITIONS OR THE ACTUAL QUANTITIES OR DISTRIBUTION OF QUANTITIES OF WORK WHICH WILL BE REQUIRED.

NO.	DATE	DESCRIPTION

F.H.W.A. REGION	STATE	TOWN	FED. AID PROJ. NO.	PROJ. NO.	YEAR	ROUTE NO.	SHEET NO.	TOTAL SHEETS
1	CONN	GREENWICH	N/A	9056-0055	2013	TR	24	29

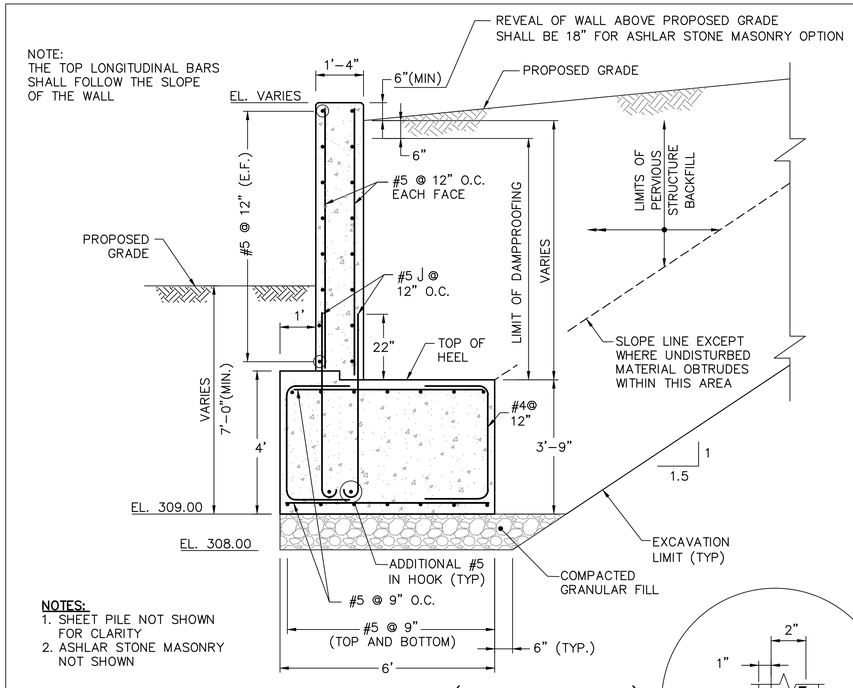

NOTES:
1. SHEET PILE NOT SHOWN FOR CLARITY
2. ASHLAR STONE MASONRY NOT SHOWN

TYPICAL WALL SECTION (WW 1A, 2A, 2B)

SCALE: 1/2"=1'

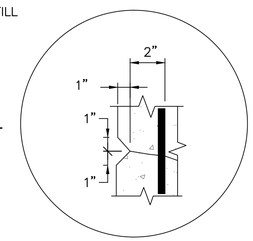

RUSTICATION DETAIL

N.T.S

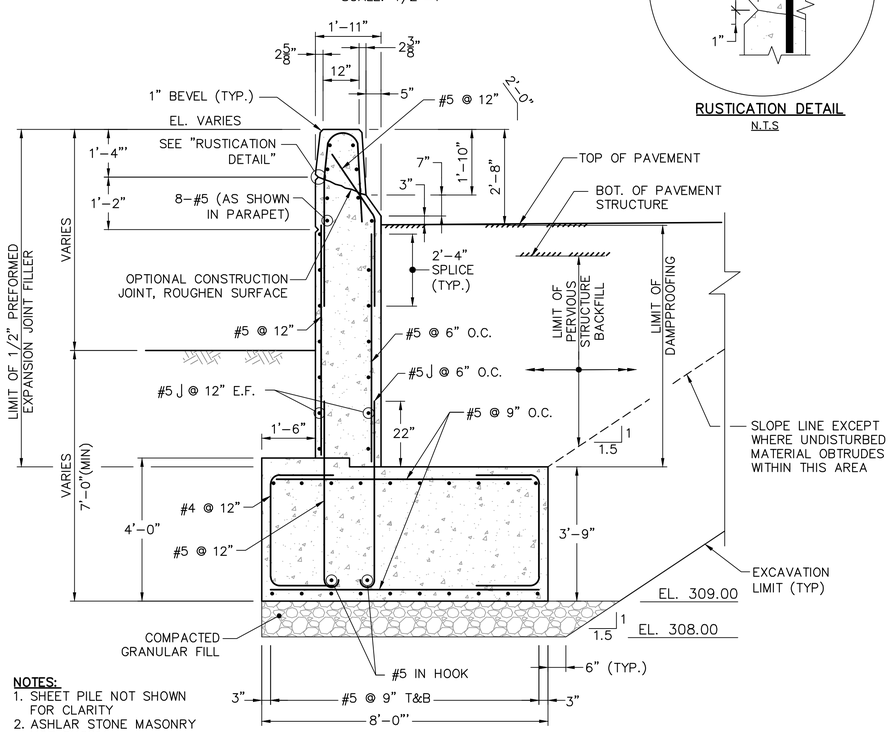

NOTES:
1. SHEET PILE NOT SHOWN FOR CLARITY
2. ASHLAR STONE MASONRY NOT SHOWN

WINGWALL 1B SECTION

SCALE: 1/2"=1'

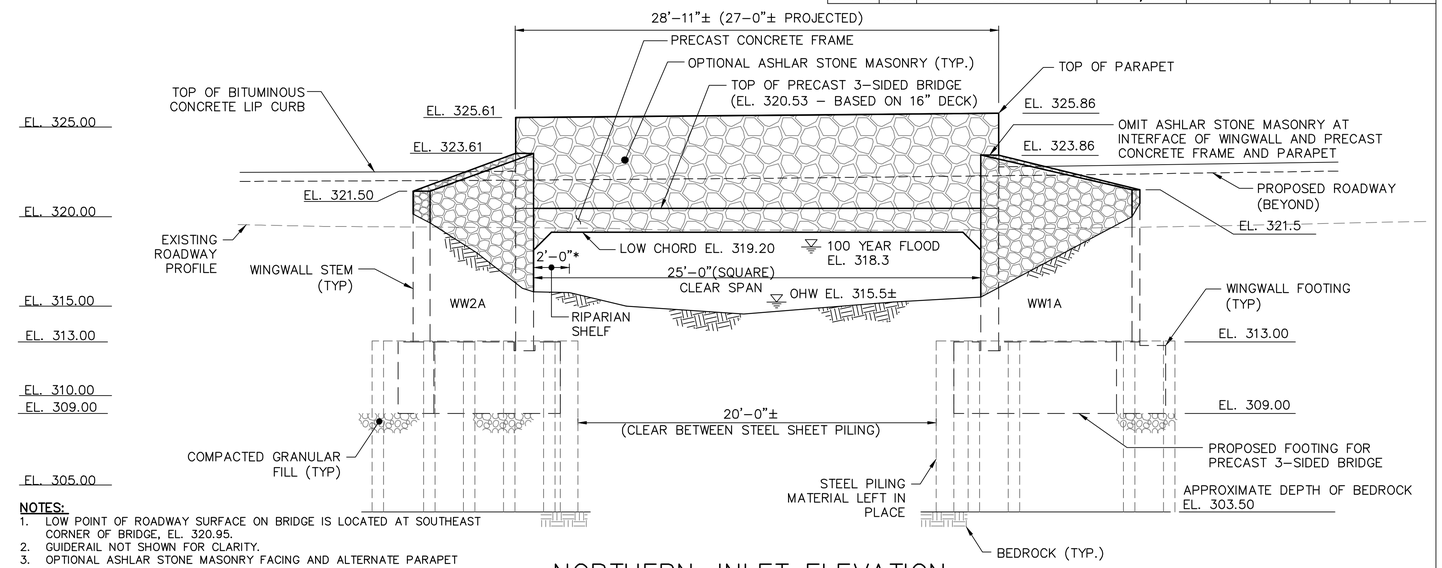

NOTES:
1. LOW POINT OF ROADWAY SURFACE ON BRIDGE IS LOCATED AT SOUTHEAST CORNER OF BRIDGE, EL. 320.95.
2. GUIDERAIL NOT SHOWN FOR CLARITY.
3. OPTIONAL ASHLAR STONE MASONRY FACING AND ALTERNATE PARAPET CONFIGURATION SHOWN.
4. ASHLAR STONE MASONRY FACING SHALL EXTEND TO A POINT 9" BELOW PROPOSED GRADE OR TO THE BOTTOM OF PROPOSED PAVEMENT
5. * 2'-0" WIDE RIPARIAN SHELF, 12" MINIMUM DEPTH OF NATURAL STREAM BED MATERIAL

NORTHERN-INLET ELEVATION

SCALE: 1/4" = 1'-0"

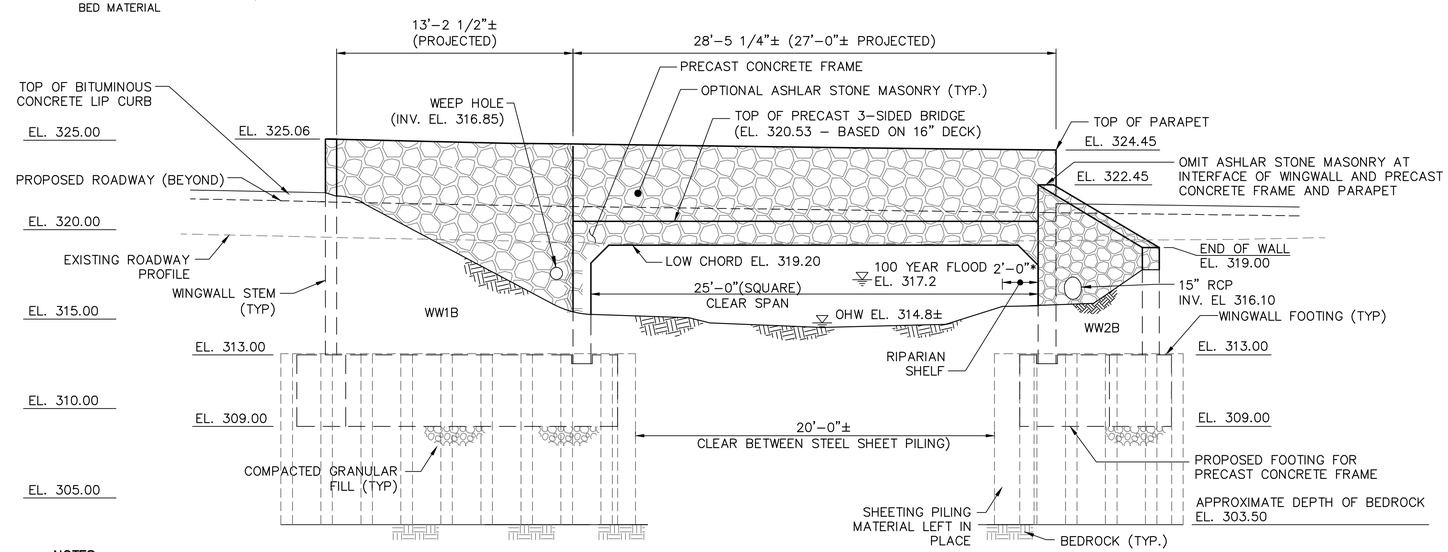

NOTES:
1. LOW POINT OF ROADWAY SURFACE ON BRIDGE IS LOCATED AT SOUTHEAST CORNER OF BRIDGE, EL. 320.95.
2. GUIDERAIL NOT SHOWN FOR CLARITY.
3. OPTIONAL ASHLAR STONE MASONRY FACING AND ALTERNATE PARAPET CONFIGURATION SHOWN.
4. ASHLAR STONE MASONRY FACING SHALL EXTEND TO A POINT 9" BELOW PROPOSED GRADE OR TO THE BOTTOM OF PROPOSED PAVEMENT
5. * 2'-0" WIDE RIPARIAN SHELF, 12" MINIMUM DEPTH OF NATURAL STREAM BED MATERIAL

SOUTHERN-OUTLET ELEVATION

SCALE: 1/4" = 1'-0"

THE INFORMATION, INCLUDING ESTIMATED QUANTITIES OF WORK SHOWN ON THESE SHEETS IS BASED ON LIMITED INVESTIGATIONS AND IS IN NO WAY WARRANTED TO INDICATE THE TRUE CONDITIONS OR THE ACTUAL QUANTITIES OR DISTRIBUTION OF QUANTITIES OF WORK WHICH WILL BE REQUIRED.

NO.	DATE	DESCRIPTION

REVISIONS

TOWN OF GREENWICH

REPLACEMENT OF BRIDGE NO. 056055

JOHN STREET OVER EAST BRANCH BYRAM RIVER

WINGWALL DETAILS

ENGINEER FUSS & O'NEILL INC. CONSULTING ENGINEERS

DESIGNER P.D.B. | DRAFTER R.F.R. | CHECKER P.D.B.

APPROVED | DATE

STRUCTURE NO. 56-055 | BRIDGE LOG NO. 056055 | STRUCTURE SHEET NO. 5 OF 10

CADD:20061048A10STR005-WWD.dwg PLOTTED DATE: Jan 30, 2013

F.H.W.A. REGION	STATE	TOWN	FED. AID PROJ. NO.	PROJ. NO.	YEAR	ROUTE NO.	SHEET NO.	TOTAL SHEETS
1	CONN	GREENWICH	N/A	9056-0055	2013	TR	25	29

NOTE:
STATIONING PROVIDED ALONG THE GUTTER LINE IS MEASURED AT A POINT LOCATED ALONG THE BACK FACE OF THE PRECAST CONCRETE FRAME AT ALL LOCATIONS.

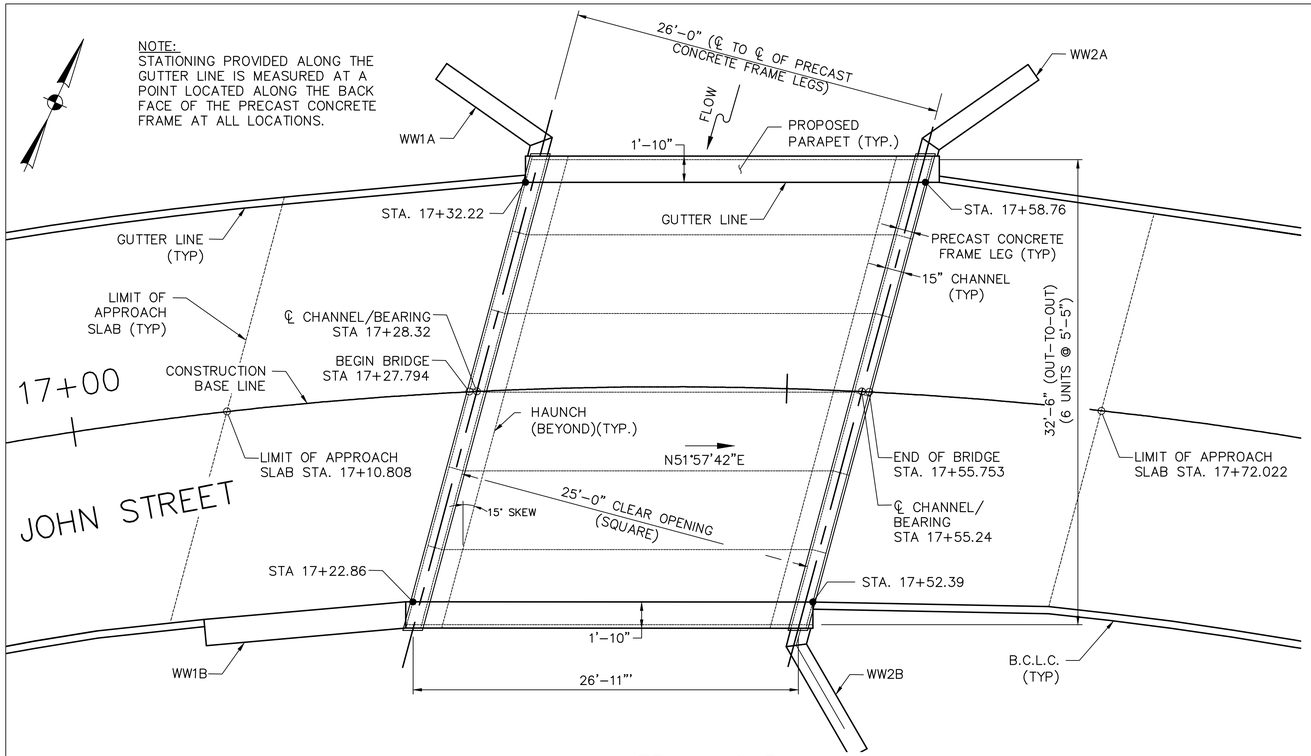

FRAMING PLAN
SCALE: 1" = 5'-0"

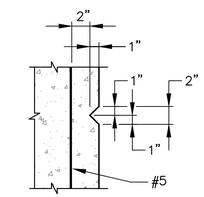

RUSTICATION DETAIL
SCALE: N.T.S.

NOTES:
1. PARAPET SHALL BE CONTINUOUS WITHOUT JOINTS
2. RAILING NOT SHOWN FOR CLARITY

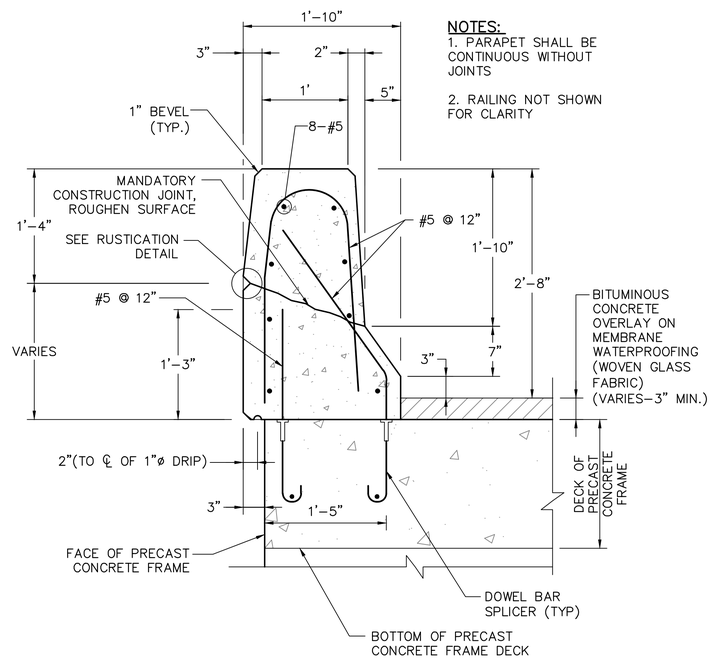

STANDARD PARAPET – (32" HIGH)
SCALE: 1" = 1'-0"

NOTES:
1. ALL BARS IN THE PARAPETS SHALL HAVE 2" CONCRETE COVER EXCEPT WHERE NOTED OTHERWISE.
2. THE PARAPET SHALL BE CAST CONTINUOUS WITHOUT JOINTS. LONGITUDINAL REINFORCEMENT SHALL BE CONTINUOUS.
3. ALL REINFORCEMENT WITHIN THE PRECAST CONCRETE FRAMES AND CAST-IN-PLACE PARAPET SHALL BE EPOXY COATED BARS.
4. ALL REINFORCEMENT WITHIN THE PRECAST CONCRETE FRAME SHALL BE DESIGNED BY THE PRECAST MANUFACTURER.
5. THE DOWEL BAR SPLICERS AND ALL REINFORCEMENT WITHIN THE PRECAST CONCRETE FRAMES SHALL BE PAID FOR UNDER ITEM "PRECAST CONCRETE FRAMES".

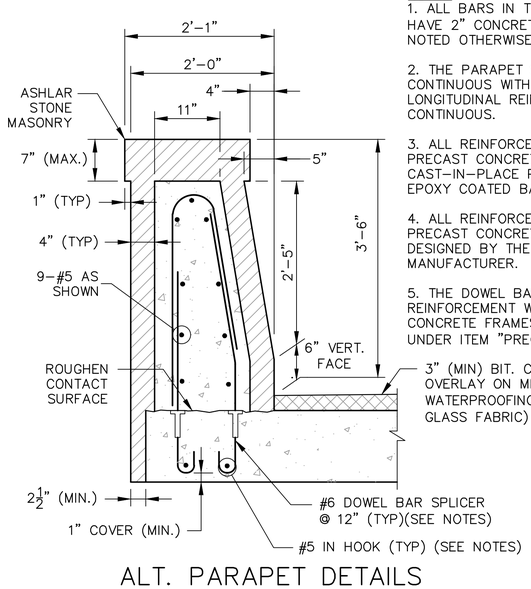

ALT. PARAPET DETAILS (ASHLAR STONE MASONRY FACING)
SCALE: 1" = 1'-0"

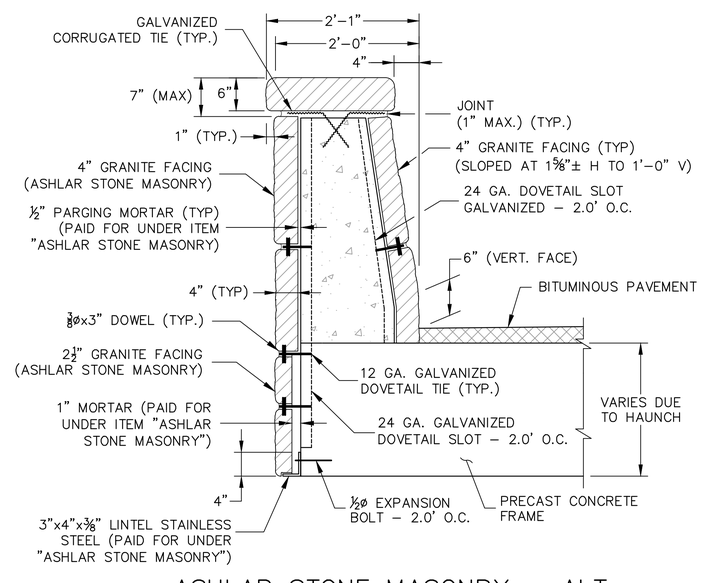

ASHLAR STONE MASONRY – ALT.
SCALE: 1" = 1'-0"

THE INFORMATION, INCLUDING ESTIMATED QUANTITIES OF WORK SHOWN ON THESE SHEETS IS BASED ON LIMITED INVESTIGATIONS AND IS IN NO WAY WARRANTED TO INDICATE THE TRUE CONDITIONS OR THE ACTUAL QUANTITIES OR DISTRIBUTION OF QUANTITIES OF WORK WHICH WILL BE REQUIRED.

NOTES:

24 GA. DOVETAIL SLOT – GALVANIZED, TO BE PAID FOR UNDER THE ITEMS "PRECAST CONCRETE FRAME", "CLASS A CONCRETE" OR "CLASS F CONCRETE" BASED ON LOCATION.

12 GA. DOVETAIL TIE – GALVANIZED, ⅜"ø x 3" DOWEL, AND ALL ASSOCIATED HARDWARE AND APPURTENANCES REQUIRED TO SECURE THE GRANITE STONE FACING NOT EMBEDDED INTO THE PRECAST CONCRETE FRAMES, WINGWALLS, AND PARAPETS SHALL BE PAID FOR UNDER "ASHLAR STONE MASONRY".

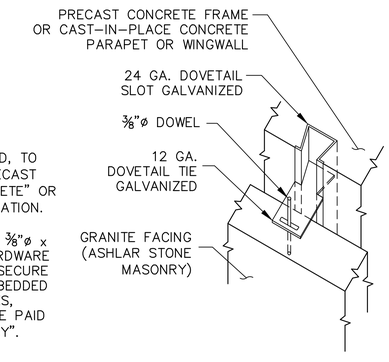

DOVETAIL ANCHORAGE DETAIL
N.T.S.

NO.	DATE	DESCRIPTION

REVISIONS

TOWN OF GREENWICH

REPLACEMENT OF BRIDGE NO. 056055

JOHN STREET OVER EAST BRANCH BYRAM RIVER

FRAMING PLAN & DETAILS

ENGINEER

DESIGNER P.D.B. | DRAFTER R.F.R. | CHECKER P.D.B.

APPROVED | DATE

STRUCTURE NO. 56-055 | BRIDGE LOG NO. 056055 | STRUCTURE SHEET NO. 6 OF 10

CADD:20061048A10STR006-FRM.dwg PLOTTED DATE: Jan 30, 2013

F.H.W.A. REGION	STATE	TOWN	FED. AID PROJ. NO.	PROJ. NO.	YEAR	ROUTE NO.	SHEET NO.	TOTAL SHEETS
1	CONN	GREENWICH	N/A	9056-0055	2013	TR	26	29

PRECAST CONCRETE FRAME NOTES:

1. THE CONTRACTOR SHALL SUBMIT DESIGN CALCULATIONS PREPARED IN ACCORDANCE WITH THE LATEST AASHTO STANDARD SPECIFICATIONS FOR HIGHWAY BRIDGES AS SUPPLEMENTED BY THE CONNECTICUT DEPARTMENT OF TRANSPORTATION BRIDGE MANUAL FOR HS 20-44 LOADING FOR APPROVAL BY THE ENGINEER. THE DESIGN COMPUTATIONS SHALL CONSIDER ALL LOADINGS AS ARE APPROPRIATE DURING FABRICATION, SHIPMENT, ERECTION, CONSTRUCTION, AND UPON COMPLETION OF CONSTRUCTION, BASED UPON THESE CONSTRUCTION DRAWINGS.
2. THE FRAME DIMENSIONS PROVIDED ARE SHOWN TO ESTABLISH THE SIZE OF PROPOSED OPENING. THE WIDTH AND THICKNESS OF EACH FRAME UNIT MAY VARY DEPENDING UPON THE MANUFACTURER'S SPECIFICATIONS PROVIDED THAT THE OPENING SIZE IS MAINTAINED.
3. THE CONFIGURATION OF THE PRECAST CONCRETE FRAME JOINTS PROVIDED HEREIN ARE FOR REFERENCE ONLY. THE PRECAST CONCRETE FRAME MANUFACTURER SHALL DETAIL THE JOINTS AND CONNECTIONS BETWEEN ADJACENT PRECAST CONCRETE FRAME UNITS AND SHALL BE RESPONSIBLE OF THE DESIGN OF ALL APPURTENANCES SUCH AS WELDED CONNECTIONS, TRANSVERSE TIES, TIE POCKETS, ETC., REQUIRED TO INSTALL AND CONNECT ADJACENT UNITS.
4. THE DESIGN OF THE FOOTING DETAILED HEREIN IS BASED UPON THE ASSUMED GEOMETRY OF THE PRECAST CONCRETE FRAME SHOWN. THE CONTRACTOR SHALL PREPARE AND SUBMIT FOR APPROVAL A COMPLETE REDESIGN OF THE FOOTING SHOULD THE GEOMETRY OF THE FRAME UNITS VARY FROM THAT SPECIFIED ON THE PLANS.
5. PRECAST CONCRETE FRAME UNITS SHALL CONFORM TO THE APPLICABLE PARTS OF THE CONN. D.O.T. FORM 816, AS WELL AS SPECIAL PROVISIONS. ALL FOOTINGS, WINGWALLS, AND BRIDGE PARAPETS SHALL BE CAST IN PLACE AS SHOWN ON THE PLANS.
6. THE MINIMUM 28 DAY CONCRETE COMPRESSIVE STRENGTH FOR PRECAST CONCRETE FRAME UNITS SHALL BE 5000 PSI.
7. ALL REINFORCING IN THE PRECAST CONCRETE FRAME UNITS SHALL BE EPOXY-COATED.
8. THE CONTRACTOR SHALL COORDINATE WITH THE PRECAST CONCRETE FRAME MANUFACTURER THE INSTALLATION OF ALL ITEMS REQUIRED TO BE CAST-IN-PLACE AT THE TIME OF MANUFACTURE.
9. A LOW CHORD ELEVATION OF 319.2 MUST BE MAINTAINED. THE CONTRACTOR SHALL COORDINATE THE THICKNESS OF THE PRECAST CONCRETE FRAME DECK AND THE HEIGHT OF THE LEGS IN WITH THE PRECAST MANUFACTURER IN ORDER TO MAINTAIN A MINIMUM LOW CHORD ELEVATION OF 319.2 AND THE PROPOSED ROADWAYS SURFACE ELEVATIONS.

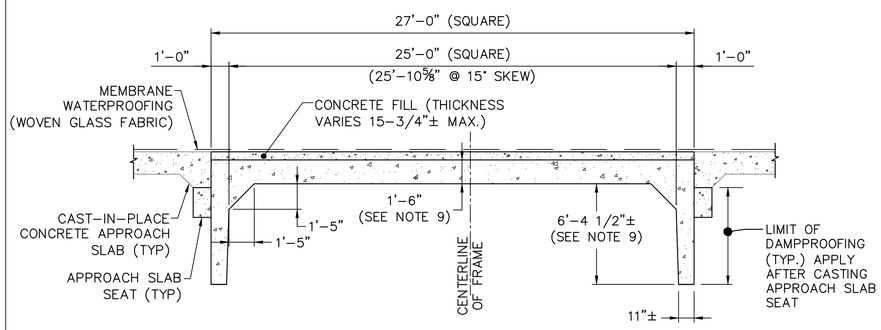

FRAME TYPICAL SECTION

SCALE: 1/4"=1'-0"

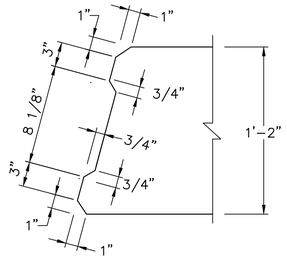

TYPICAL LEG JOINT CONFIGURATION

N.T.S.

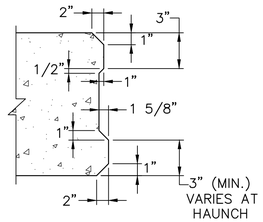

TYPICAL ROOF JOINT CONFIGURATION

N.T.S.

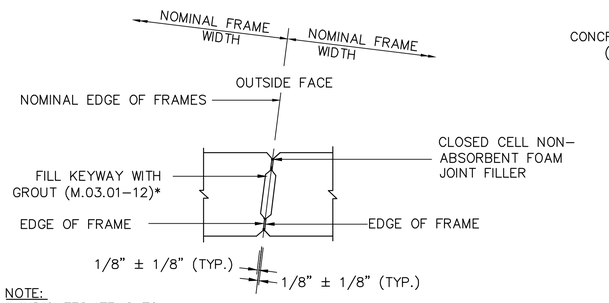

NOTE:
* INDICATES ITEMS TO BE PAID FOR UNDER ITEM PRECAST CONCRETE FRAME

NOTE:
THE VERTICAL SHEAR KEYS SHALL BE FILLED PRIOR TO FILLING THE HORIZONTAL SHEAR KEYS.

TYPICAL LEG JOINT DETAIL

N.T.S.

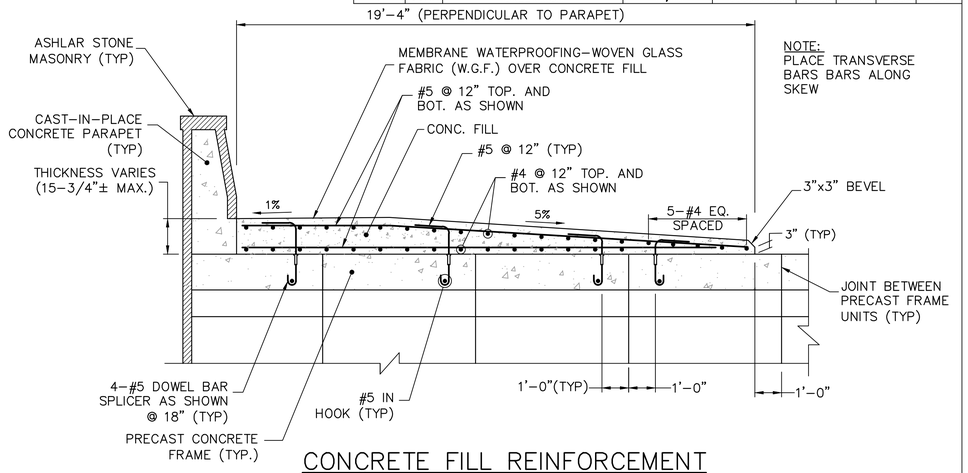

NOTE:
PLACE TRANSVERSE BARS BARS ALONG SKEW

CONCRETE FILL REINFORCEMENT

SCALE: 3/8"=1'-0"

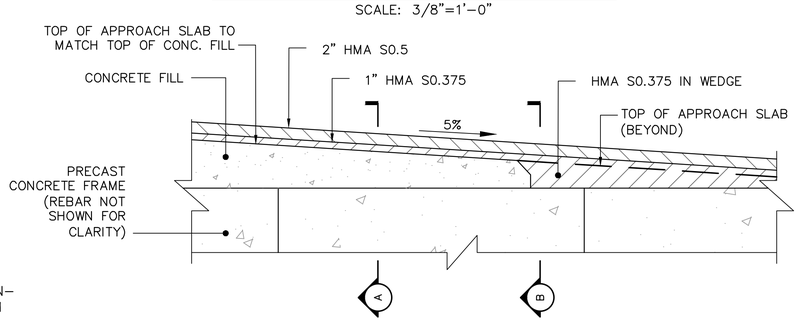

HOT MIX ASPHALT AT END OF CONCRETE FILL

SCALE: N.T.S.

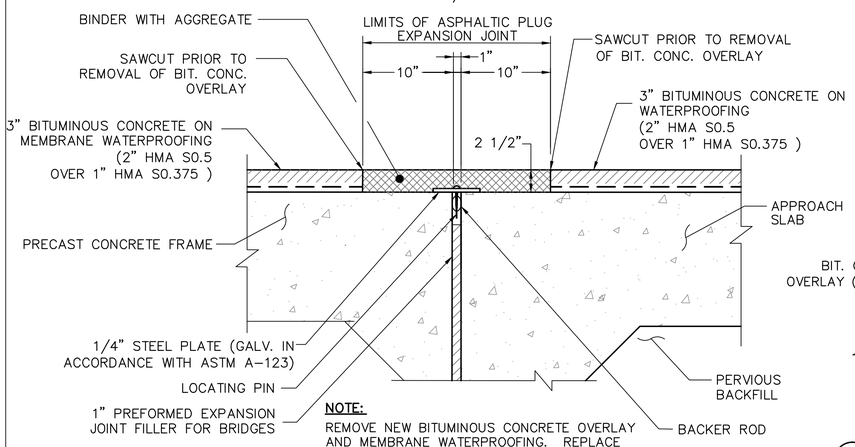

NOTE:
REMOVE NEW BITUMINOUS CONCRETE OVERLAY AND MEMBRANE WATERPROOFING. REPLACE WITH ASPHALTIC PLUG EXPANSION JOINT SYSTEM, TO BE PAID FOR UNDER THE ITEM "ASPHALTIC PLUG EXPANSION JOINT SYSTEM."

ASPHALTIC PLUG EXPANSION JOINT

SCALE: 1½" = 1'-0"

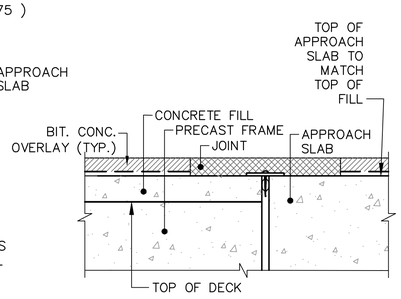

A SECTION AT CONCRETE FILL

SCALE: 1" = 10'-0"

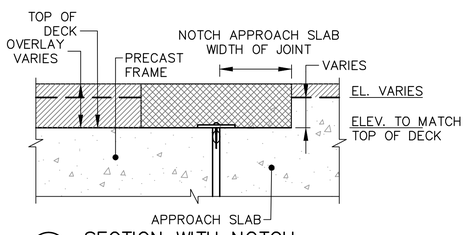

B SECTION WITH NOTCH

SCALE: 1" = 10'-0"

THE INFORMATION, INCLUDING ESTIMATED QUANTITIES OF WORK SHOWN ON THESE SHEETS IS BASED ON LIMITED INVESTIGATIONS AND IS IN NO WAY WARRANTED TO INDICATE THE TRUE CONDITIONS OR THE ACTUAL QUANTITIES OR DISTRIBUTION OF QUANTITIES OF WORK WHICH WILL BE REQUIRED.

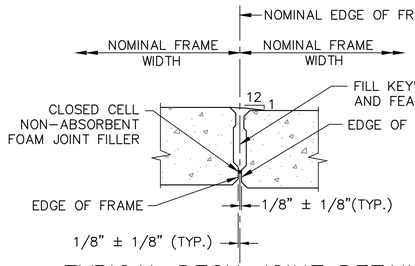

NOTE:
* INDICATES ITEMS TO BE PAID FOR UNDER ITEM PRECAST CONCRETE FRAME

TYPICAL DECK JOINT DETAIL

N.T.S.

TOWN OF GREENWICH

REPLACEMENT OF BRIDGE NO. 056055

JOHN STREET
OVER
EAST BRANCH BYRAM RIVER

PRECAST CONCRETE FRAME

NO.	DATE	DESCRIPTION

REVISIONS

ENGINEER			
DESIGNER P.D.B.	DRAFTER R.F.R.	CHECKER P.D.B.	
APPROVED		DATE	
STRUCTURE NO. 56-055		BRIDGE LOC NO. 056055	STRUCTURE SHEET NO. 7 OF 10

F.H.W.A. REGION	STATE	TOWN	FED. AID PROJ. NO.	PROJ. NO.	YEAR	ROUTE NO.	SHEET NO.	TOTAL SHEETS
1	CONN	GREENWICH	N/A	9056-0055	2013	TR	27	29

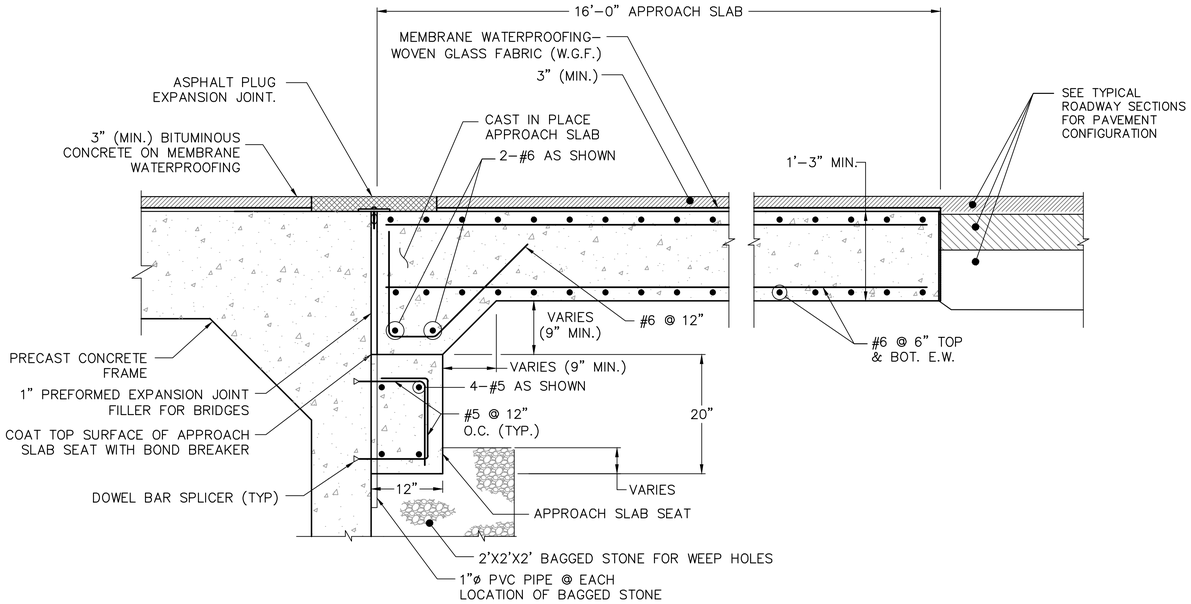

APPROACH SLAB & SEAT

SCALE: 1" = 1'-0"

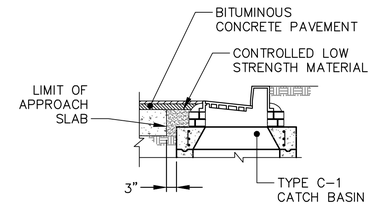

(A) SECTION AT APPROACH SLAB AND CATCH BASIN

SCALE: N.T.S.

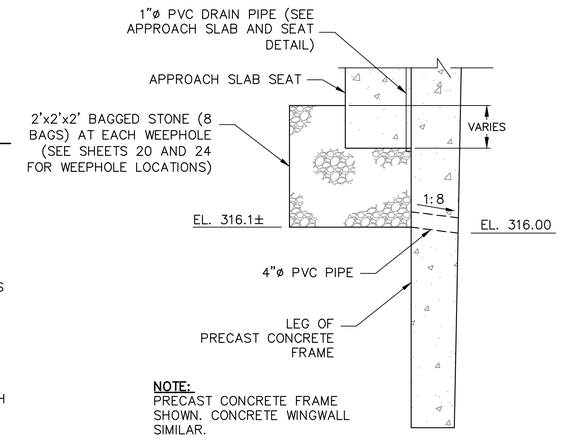

NOTE:
PRECAST CONCRETE FRAME SHOWN. CONCRETE WINGWALL SIMILAR.

WEEPHOLE DETAIL

SCALE: N.T.S.

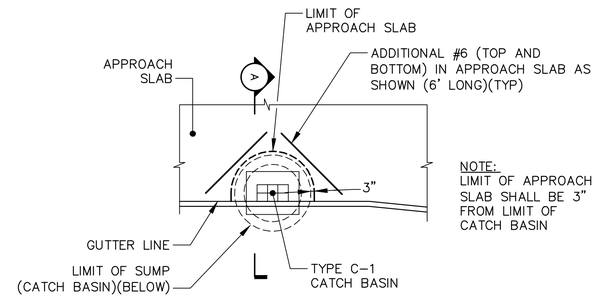

NOTE:
LIMIT OF APPROACH SLAB SHALL BE 3" FROM LIMIT OF CATCH BASIN

APPROACH SLAB AT CATCH BASIN

SCALE: N.T.S.

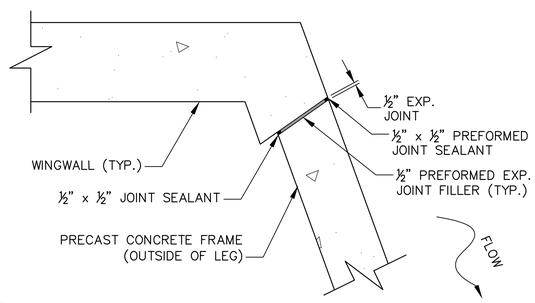

NOTES:

1. JOINT SEAL TO EXTEND FROM TOP OF FOOTING TO TOP OF PARAPET OR WALL AND HORIZONTALLY ALONG THIS JOINT TO OUTSIDE FACE OF PARAPET OR WALL AND DOWN TO TOP OF FOOTING.

2. NO REINFORCEMENT SHALL PASS THROUGH EXPANSION OR CONTRACTION JOINTS.

EXPANSION JOINT DETAIL

SCALE: N.T.S.

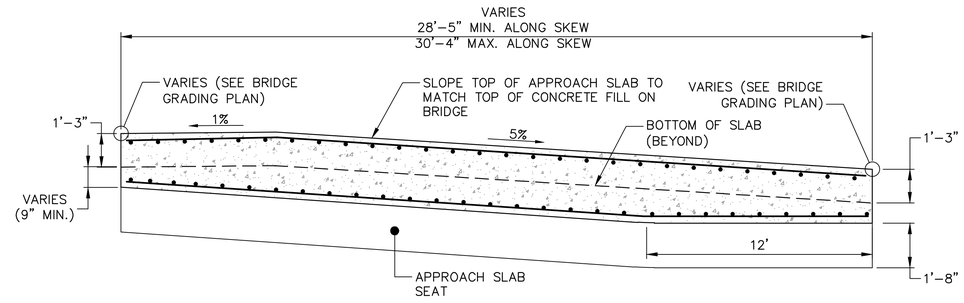

TYPICAL APPROACH SLAB SECTION AT SEAT

SCALE: 3/8" = 1'-0"

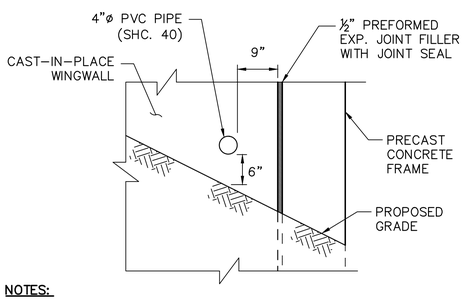

NOTES:

ASHLAR STONE MASONRY NOT SHOWN.

THE DISTANCE FROM THE PVC WEEP DRAIN TO THE EDGE OF THE WALL STEM SHALL BE 9".

SHC. 40 PVC PIPE FOR WEEP HOLE OUTLET THROUGH THE WINGWALL SHALL BE PAID FOR UNDER ITEM "CLASS A CONCRETE".

WEEP HOLE DRAIN INVERTS SHALL BE EL. 316.00.

WINGWALL WEEPHOLE OUTLET

SCALE: 3/4"=1'-0"

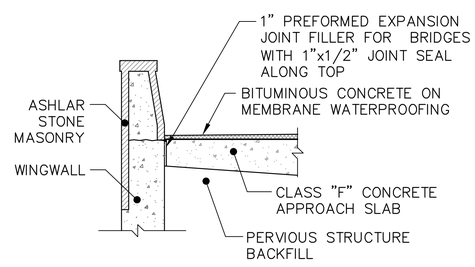

TYPICAL APPROACH SLAB SECTION AT WINGWALLS

N.T.S.

THE INFORMATION, INCLUDING ESTIMATED QUANTITIES OF WORK SHOWN ON THESE SHEETS IS BASED ON LIMITED INVESTIGATIONS AND IS IN NO WAY WARRANTED TO INDICATE THE TRUE CONDITIONS OR THE ACTUAL QUANTITIES OR DISTRIBUTION OF QUANTITIES OF WORK WHICH WILL BE REQUIRED.

NO.	DATE	DESCRIPTION

REVISIONS

TOWN OF GREENWICH

REPLACEMENT OF BRIDGE NO. 056055

JOHN STREET
OVER
EAST BRANCH BYRAM RIVER

BRIDGE DETAILS

ENGINEER FUSS & O'NEILL INC. CONSULTING ENGINEERS			
DESIGNER P.D.B.	DRAFTER R.F.R.	CHECKER P.D.B.	
APPROVED		DATE	
STRUCTURE NO. 56-055		BRIDGE LOG NO. 056055	STRUCTURE SHEET NO. 8 OF 10

F.H.W.A. REGION	STATE	TOWN	FED. AID PROJ. NO.	PROJ. NO.	YEAR	ROUTE NO.	SHEET NO.	TOTAL SHEETS
1	CONN	GREENWICH	N/A	9056-0055	2013	TR	28	29

CONNECTICUT BRIDGE DESIGN MANUAL

SAFETY SHAPE TRANSITION FOR BEAM RAIL ATTACHMENT STANDARD PARAPET 32" HIGH LEADING END

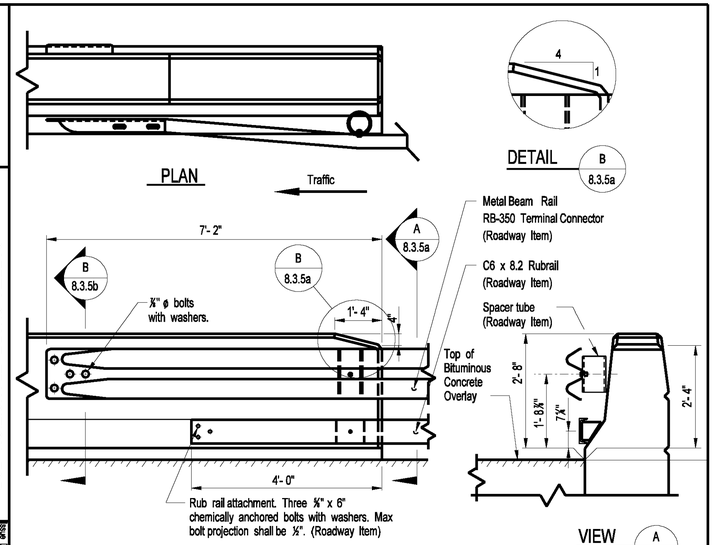

DESIGN INFORMATION: ***For parapet reinforcement within these limits, see plate 8.3.5c***
This detail to be used at both ends on bi-directional roadways.

LEADING END R-B 350 RAIL ATTACHMENT

Issue Date: 10/03
Revision Date:
Plate Number: 8.3.5a

CONNECTICUT BRIDGE DESIGN MANUAL

SAFETY SHAPE TRANSITION FOR BEAM RAIL ATTACHMENT STANDARD PARAPET 32" HIGH LEADING END

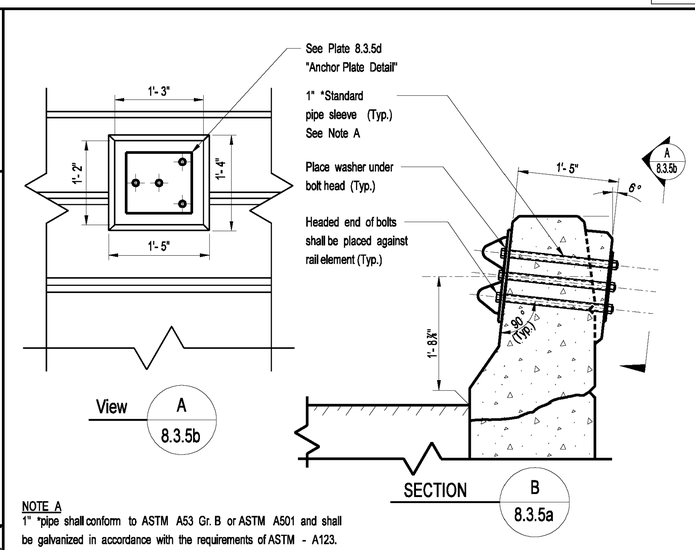

NOTE A
1" *pipe shall conform to ASTM A53 Gr. B or ASTM A501 and shall be galvanized in accordance with the requirements of ASTM - A123.

DESIGN INFORMATION: ***For reinforcement not shown, see plate 8.3.5d***
For parapet dimensions not shown, see plate 3.4.3

*Dimension taken from top of parapet to intersection of anchor bolt ℄ and face of buildout.

LEADING END R-B 350 RAIL ATTACHMENT

Issue Date: 10/03
Revision Date:
Plate Number: 8.3.5b

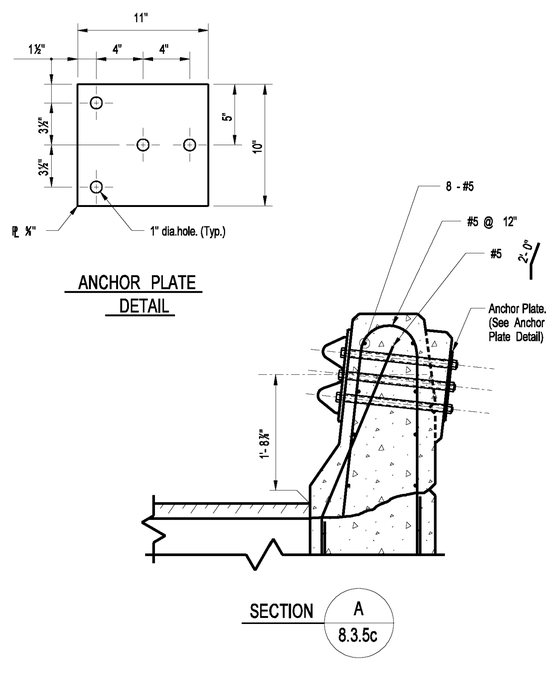

CONNECTICUT BRIDGE DESIGN MANUAL

SAFETY SHAPE TRANSITION FOR BEAM RAIL ATTACHMENT STANDARD PARAPET 32" HIGH LEADING END

Issue Date: 10/03
Revision Date:
Plate Number: 8.3.5d

CONNECTICUT BRIDGE DESIGN MANUAL

SAFETY SHAPE TRANSITION FOR BEAM RAIL ATTACHMENT STANDARD PARAPET 32" HIGH LEADING END

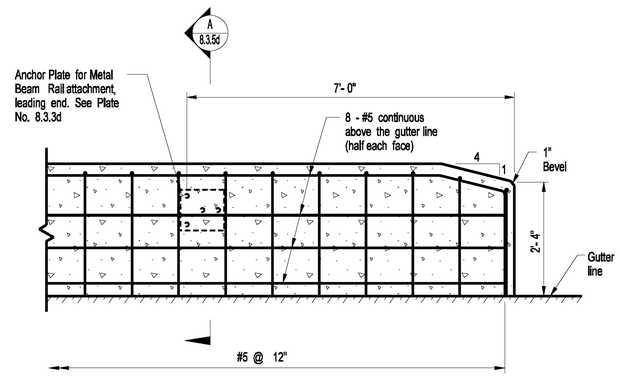

Note: See Plate 3.4.3 for typical parapet reinforcing

ELEVATION
PARAPET REINFORCEMENT AT LEADING END

Issue Date: 10/03
Revision Date:
Plate Number: 8.3.5c

THE INFORMATION, INCLUDING ESTIMATED QUANTITIES OF WORK SHOWN ON THESE SHEETS IS BASED ON LIMITED INVESTIGATIONS AND IS IN NO WAY WARRANTED TO INDICATE THE TRUE CONDITIONS OR THE ACTUAL QUANTITIES OR DISTRIBUTION OF QUANTITIES OF WORK WHICH WILL BE REQUIRED.

NO.	DATE	DESCRIPTION

REVISIONS

TOWN OF GREENWICH

REPLACEMENT OF BRIDGE NO. 056055
JOHN STREET
OVER
EAST BRANCH BYRAM RIVER

GUIDERAIL ATTACHMENT

ENGINEER FUSS & O'NEILL INC. CONSULTING ENGINEERS
DESIGNER P.D.B. DRAFTER R.F.R. CHECKER P.D.B.
APPROVED DATE
STRUCTURE NO. 56-055
BRIDGE LOC NO. 056055
STRUCTURE SHEET NO. 9 of 10

CADD:20061048A10STR009-GRA.dwg PLOTTED DATE: Jan 30, 2013

F.H.W.A. REGION	STATE	TOWN	FED. AID PROJ. NO.	PROJ. NO.	YEAR	ROUTE NO.	SHEET NO.	TOTAL SHEETS
1	CONN	GREENWICH	N/A	9056-0055	2013	TR	29	29

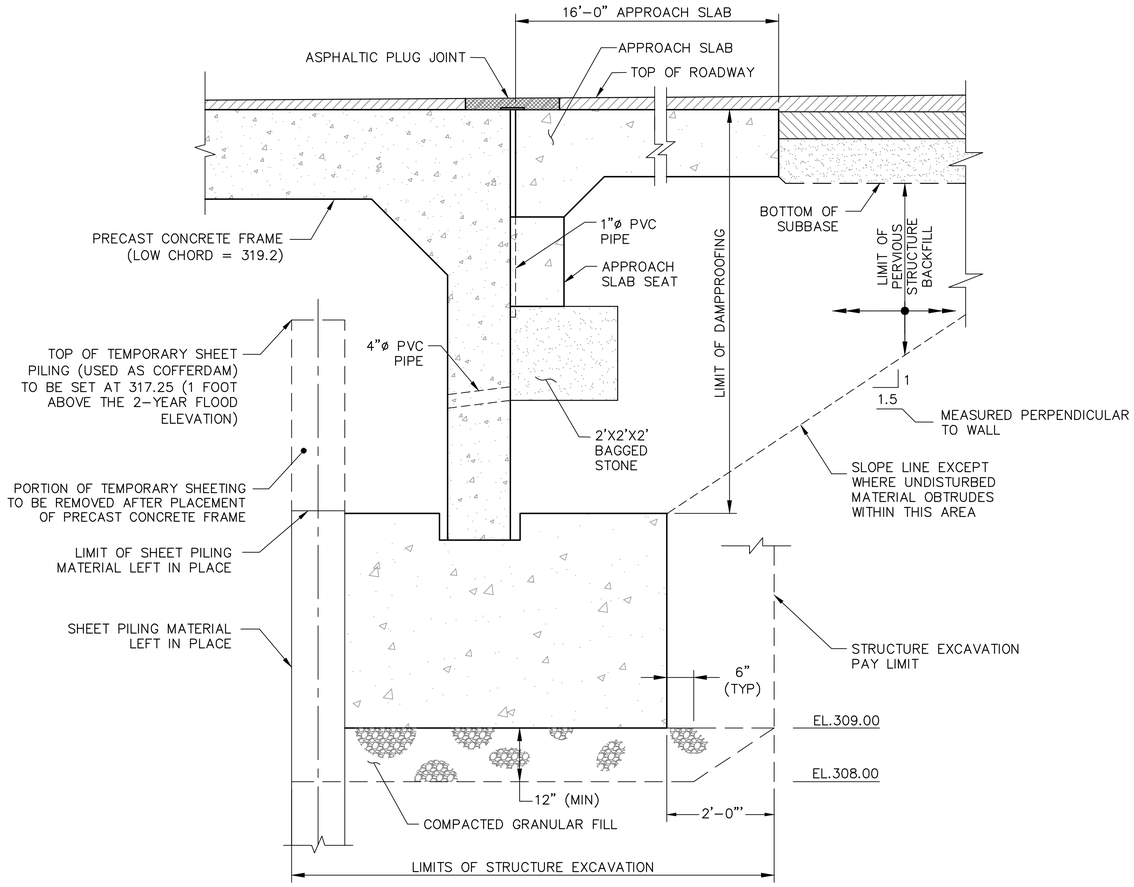

PRECAST CONCRETE FRAME PAYMENT LIMITS

SCALE: NOT TO SCALE

NOTES:

STONE FACING NOT SHOWN

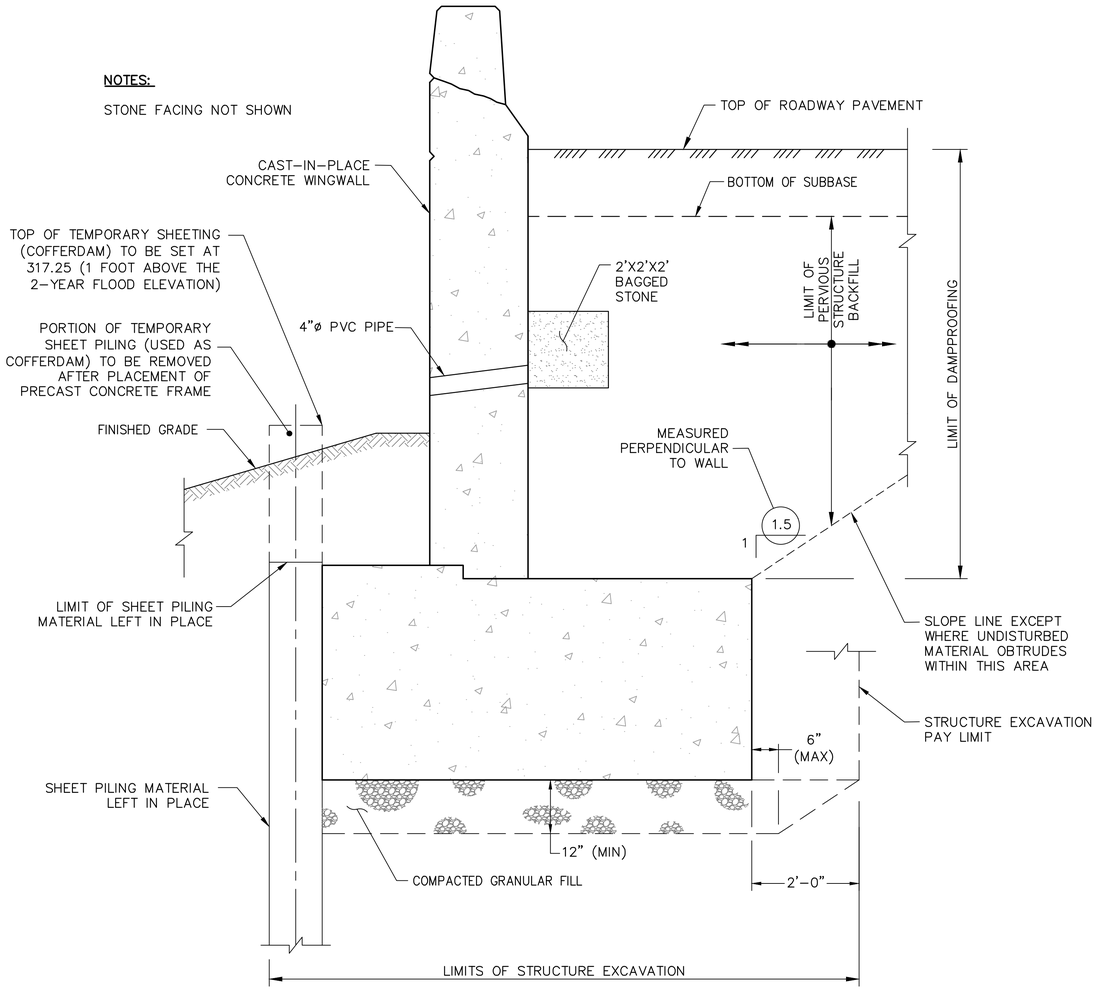

WINGWALL PAYMENT LIMITS

SCALE: NOT TO SCALE

NOTES:

1. 4"ø PVC PIPE FOR WEEPHOLES, DAMPPROOFING, AND ALL OTHER APPURTENANCES FOR THE PRECAST CONCRETE FRAME UNITS SHALL BE PAID FOR UNDER ITEM "PRECAST CONCRETE FRAME"
2. TEMPORARY SHEET PILING AND SHEET PILING MATERIAL LEFT IN PLACE SHALL BE PAID FOR UNDER STRUCTURE EXCAVATION-EARTH (COMPLETE) AND STRUCTURE EXCAVATION-ROCK (COMPLETE)

THE INFORMATION, INCLUDING ESTIMATED QUANTITIES OF WORK SHOWN ON THESE SHEETS IS BASED ON LIMITED INVESTIGATIONS AND IS IN NO WAY WARRANTED TO INDICATE THE TRUE CONDITIONS OR THE ACTUAL QUANTITIES OR DISTRIBUTION OF QUANTITIES OF WORK WHICH WILL BE REQUIRED.

NO.	DATE	DESCRIPTION

REVISIONS

TOWN OF GREENWICH

REPLACEMENT OF BRIDGE NO. 056055

JOHN STREET
OVER
EAST BRANCH BYRAM RIVER

PAYMENT LIMITS

ENGINEER

DESIGNER P.D.B. | DRAFTER R.F.R. | CHECKER P.D.B.

APPROVED | DATE

STRUCTURE NO. 56-055

BRIDGE LOG NO. 056055

STRUCTURE SHEET NO. 10 OF 10