03 - STRUCTURAL SUBSET
INDEX OF DRAWINGS

DRAWING NUMBER	DRAWING TITLE	DRAWING NUMBER	DRAWING TITLE	DRAWING NUMBER	DRAWING TITLE
S-1	INDEX OF DRAWINGS	S-26	BRIDGE NO. 01702 GENERAL PLAN	S-51	BRIDGE NO. 04283 FRAMING PLAN AND CLEAN AND PAINT DETAILS
S-2	GENERAL NOTES	S-27	BRIDGE NO. 01702 FRAMING PLAN AND PROPOSED BEARING DETAILS	S-52	BRIDGE NO. 04283 WEEP PIPE DETAILS
S-3	STEEL REPAIR STANDARD DETAILS 1	S-28	BRIDGE NO. 01702 CLEAN AND PAINT DETAILS	S-53	BRIDGE NO. 03519 GENERAL PLAN
S-4	STEEL REPAIR STANDARD DETAILS 2	S-29	BRIDGE NO. 01703 GENERAL PLAN	S-54	BRIDGE NO. 03519 FRAMING PLAN
S-5	STEEL REPAIR STANDARD DETAILS 3	S-30	BRIDGE NO. 01703 FRAMING PLAN AND BEARING DETAILS	S-55	BRIDGE NO. 03520 GENERAL PLAN
S-6	MISCELLANEOUS REPAIR DETAILS	S-31	BRIDGE NO. 01703 PROPOSED BEARING DETAILS	S-56	BRIDGE NO. 03520 FRAMING PLAN AND CLEAN AND PAINT DETAILS
S-7	DETERIORATED RIVOT REPLACEMENT NOTES AND DETAILS	S-32	BRIDGE NO. 01703 CLEAN AND PAINT DETAILS	S-57	BRIDGE NO. 03520 MISCELLANEOUS REPAIR DETAILS
S-8	BRIDGE NO. 03148 GENERAL PLAN	S-33	BRIDGE NO. 01704B GENERAL PLAN	S-58	BRIDGE NO. 00638 GENERAL PLAN
S-9	BRIDGE NO. 03148 CLEAN AND PAINT BEARING DETAILS	S-34	BRIDGE NO. 01704B FRAMING PLAN AND BEARING DETAILS	S-59	BRIDGE NO. 00638 FRAMING PLAN AND MISCELLANEOUS REPAIR DETAILS
S-10	BRIDGE NO. 03148 CAP GIRDER REPAIR DETAILS	S-35	BRIDGE NO. 03400A GENERAL PLAN	S-60	BRIDGE NO. 00638 BIRD CONTROL SYSTEM DETAILS
S-11	BRIDGE NO. 03148 WEEP PIPE DETAILS	S-36	BRIDGE NO. 03400A FRAMING PLAN AND PROPOSED BEARING DETAILS	S-61	BRIDGE NO. 01469D GENERAL PLAN
S-12	BRIDGE NO. 02366 GENERAL PLAN	S-37	BRIDGE NO. 03400A PROPOSED BEARING DETAILS 1	S-62	BRIDGE NO. 01469D FRAMING PLAN
S-13	BRIDGE NO. 02366 FRAMING PLAN	S-38	BRIDGE NO. 03400A PROPOSED BEARING DETAILS 2	S-63	BRIDGE NO. 01469D BEARING DETAILS
S-14	BRIDGE NO. 02366 PROPOSED BEARING DETAILS	S-39	BRIDGE NO. 03400A MISCELLANEOUS REPAIR DETAILS		
S-15	BRIDGE NO. 02366 CLEAN AND PAINT BEAM END DETAILS	S-40	BRIDGE NO. 01831 GENERAL PLAN		
S-16	BRIDGE NO. 02369 GENERAL PLAN	S-41	BRIDGE NO. 01831 FRAMING PLAN AND CLEAN AND PAINT DETAILS		
S-17	BRIDGE NO. 02369 FRAMING PLAN	S-42	BRIDGE NO. 01837 GENERAL PLAN		
S-18	BRIDGE NO. 02369 PROPOSED BEARING DETAILS 1	S-43	BRIDGE NO. 01837 FRAMING PLAN AND CLEAN AND PAINT DETAILS		
S-19	BRIDGE NO. 02369 PROPOSED BEARING DETAILS 2	S-44	BRIDGE NO. 00629 GENERAL PLAN		
S-20	BRIDGE NO. 02369 CLEAN AND PAINT DETAILS	S-45	BRIDGE NO. 00629 FRAMING PLAN AND BEARING DETAILS		
S-21	BRIDGE NO. 02378 GENERAL PLAN	S-46	BRIDGE NO. 00629 CLEAN AND PAINT DETAILS		
S-22	BRIDGE NO. 02378 PROPOSED BEARING DETAILS	S-47	BRIDGE NO. 00630 GENERAL PLAN		
S-23	BRIDGE NO. 01275 GENERAL PLAN	S-48	BRIDGE NO. 00630 FRAMING PLAN		
S-24	BRIDGE NO. 01275 FRAMING PLAN	S-49	BRIDGE NO. 00638 CLEAN AND PAINT DETAILS		
S-25	BRIDGE NO. 01275 PROPOSED BEARING DETAILS	S-50	BRIDGE NO. 04283 GENERAL PLAN		

THE DESIGN APPEARS TO CONFORM TO APPLICABLE CRITERIA. APPROVAL IS NOT TO BE CONSTRUED TO MEAN THAT ALL ASPECTS OF THE DESIGN HAVE BEEN PERSONALLY CHECKED BY THE UNDERSIGNED.

Rabih M. Barakat

Digitally signed by Rabih M. Barakat
DN: CN=Rabih M. Barakat, O=State of Connecticut, E=Rabih.Barakat@ct.gov, OU=Department of Transportation, OU=Division of Bridges and Facilities, OU=Bridge Design, L=Newington, S=Connecticut, C=US
Date: 2013.01.04 14:32:54-05'00'

TRANSPORTATION PRINCIPAL ENGINEER

REV.	DATE	REVISION DESCRIPTION	SHEET NO.
-	-	-	-
-	-	-	-
-	-	-	-
-	-	-	-
-	-	-	-
-	-	-	-

THE INFORMATION, INCLUDING ESTIMATED QUANTITIES OF WORK, SHOWN ON THESE SHEETS IS BASED ON LIMITED INVESTIGATIONS BY THE STATE AND IS IN NO WAY WARRANTED TO INDICATE THE CONDITIONS OF ACTUAL QUANTITIES OF WORK WHICH WILL BE REQUIRED.

Plotted Date: 1/2/2013

DESIGNER/DRAFTER:

CHECKED BY:

STATE OF CONNECTICUT
DEPARTMENT OF TRANSPORTATION

Filename: ...\SB_MSH_171_359_INDEX_SHEET.dgn

SIGNATURE/ BLOCK:
OFFICE OF ENGINEERING

APPROVED BY:

PROJECT TITLE:
BEAM END AND BEARING REPAIRS IN DISTRICT 1

TOWN: DISTRICT 1

DRAWING TITLE: INDEX OF DRAWINGS

PROJECT NO. 171-359

DRAWING NO. S-1

SHEET NO. 03.01

GENERAL NOTES

1. SPECIFICATIONS: CONNECTICUT DEPARTMENT OF TRANSPORTATION FORM 816 (2004), SUPPLEMENTAL SPECIFICATIONS DATED JULY 2012 AND SPECIAL PROVISIONS.

2. DESIGN SPECIFICATIONS: AASHTO LRFD BRIDGE DESIGN SPECIFICATIONS CUSTOMARY U.S. UNITS 4TH EDITION 2007, WITH THE INTERIM SPECIFICATIONS UP TO AND INCLUDING (2009) AS SUPPLEMENTED BY THE CONNECTICUT DEPARTMENT OF TRANSPORTATION BRIDGE DESIGN MANUAL (2003).

3. ALLOWABLE DESIGN STRESSES:

   STRUCTURAL STEEL: AASHTO M270 GRADE 36T2..... Fy = 36 KSI

4. LIVE LOAD: HL 93

5. PAINT: PAINT SHALL CONFORM TO THE SPECIAL PROVISION, "LOCALIZED PAINT REMOVAL AND FIELD PAINTING OF EXISTING STEEL (SITE NO.)." THE NEW PAINT COLOR OF THE TOP COAT SHALL CONFORM TO FEDERAL STANDARD COLOR NUMBER 36463 (GRAY).

6. DIMENSIONS: WHEN DECIMAL DIMENSIONS ARE GIVEN TO LESS THAN THREE DECIMAL PLACES, THE OMITTED DIGITS SHALL BE ASSUMED TO BE ZEROS.

7. EXISTING DIMENSIONS: DIMENSION OF THE EXISTING STRUCTURES SHOWN ON THESE PLANS ARE FOR GENERAL REFERENCE ONLY. THEY HAVE BEEN TAKEN FROM THE PROJECT NUMBERS GIVEN IN "TABLE OF ORIGINAL PROJECT INFORMATION" ON THIS SHEET AND ARE NOT GUARANTEED. THE CONTRACTOR SHALL TAKE ALL FIELD MEASUREMENTS NECESSARY TO ASSURE PROPER FIT OF THE FINISHED WORK AND SHALL ASSUME FULL RESPONSIBILITY FOR THEIR ACCURACY.

8. TRAFFIC: ALL WORK SHALL BE DONE IN ACCORDANCE WITH THE SPECIAL PROVISIONS "MAINTENANCE AND PROTECTION OF TRAFFIC" AND "PROSECUTION AND PROGRESS."

9. UTILITIES: THE CONTRACTOR SHALL TAKE THE PROPER PRECAUTIONS TO ENSURE THERE WILL BE NO DISRUPTION OF EXISTING UTILITIES WHILE COMPLETING REQUIRED WORK. 2 WEEKS PRIOR TO THE START OF WORK ON BRIDGE NO. 01275 CONTACT THE FOLLOWING UTILITIES:
   CONNECTICUT WATER COMPANY: E. JOHN KING (860)664-6066, jking@ctwater.com
   YANKEE GAS: KENNETH ZEMBRZUSKI (860)665-5270, kenneth.zembrzuski@nu.com

10. RAILROAD: SEE APPLICABLE NOTICE TO CONTRACTOR.

REHABILITATION OF EXISTING STRUCTURAL STEEL NOTES

1. REMOVAL OF DETERIORATED PORTIONS OF EXISTING STRUCTURAL STEEL SHALL BE INCLUDED FOR PAYMENT UNDER THE ITEM "REMOVAL OF EXISTING STRUCTURAL STEEL".

2. ALL STRUCTURAL STEEL PLATES SHALL CONFORM AASHTO M270 GRADE 36T2.

3. ALL STRUCTURAL STEEL PLATES SHALL BE SMOOTH, FREE OF BURRS, NICKS, GOUGES, OIL, OR OTHER COATINGS.

4. WELDING DETAILS, PROCEDURES AND TESTING METHODS SHALL CONFORM TO THE ANSI/AASHTO/AWS D1.5:2008 - BRIDGE WELDING CODE, UNLESS OTHERWISE NOTED ON THE PLAN.

5. ALL REPAIR PLATE TO FLANGE, WEB AND OR CONNECTION/STIFFENER PLATE FILLET WELDS SHALL BE INSPECTED BY THE MAGNETIC PARTICLE METHOD. ALL COMPLETE JOINT PENETRATION GROOVE WELDS SHALL BE INSPECTED BY ULTRASONIC TESTING.

6. MULTIPLE PASS WELDS, INSPECTED BY THE MAGNETIC PARTICLE METHOD SHALL HAVE EACH PASS OR LAYER INSPECTED AND ACCEPTED BEFORE PROCEEDING TO THE NEXT PASS OR LAYER, AS DETERMINED BY THE ENGINEER.

7. DIMENSIONS OF AREAS FOR STEEL REPAIRS ARE TAKEN FROM MOST RECENT INSPECTION REPORTS. THE CONTRACTOR SHALL PROVIDE THE ENGINEER ACCESS TO THE LOCATIONS FOR FURTHER INSPECTION AND DETERMINATION OF THE REPAIR AREA.

8. NEW REPAIR PLATE TO EXTEND A MINIMUM OF 3" PAST DETERIORATED AREA OR AS DIRECTED BY THE ENGINEER.

9. FURNISHING AND INSTALLING NEW STEEL REPAIR PLATES INCLUDING ARC GOUGING, FLAME CUTTING AND WELDING SHALL BE PAID FOR UNDER THE ITEM "STRUCTURAL STEEL".

10. SURFACE PREPARATION AND PAINTING OF REHABILITATED AREAS SHALL BE PAID FOR UNDER THE ITEM "LOCALIZED PAINT REMOVAL AND FIELD PAINTING OF EXISTING STEEL (SITE NO.)."

PAINTING NOTES

1. ALL STEEL ELEMENTS WITHIN THE PAINTING LIMITS OF BEAM ENDS SHALL INCLUDING THE BEAM, NEW STEEL, BEARING STIFFENERS, CONNECTION PLATES, END DIAPHRAGMS, ALL ELEMENTS OF BEARINGS EXCLUDING BRONZE AND ELASTOMERIC SURFACES SHALL BE PAINTED.

2. INTERMEDIATE DIAPHRAGMS SHALL NOT BE PAINTED UNLESS DIRECTED BY THE ENGINEER.

3. FOR PAINTING LOCATIONS AND LIMITS SEE INDIVIDUAL BRIDGE PLANS.

4. PAINT REMOVAL AND PAINTING LIMITS OF BEAM ENDS SHALL BE INCLUDED FOR PAYMENT UNDER THE ITEM "LOCALIZED PAINT REMOVAL AND FIELD PAINTING OF EXISTING STEEL (SITE _NO.-)". PAINT REMOVAL AND PAINTING OF AREAS OTHER THAN AREAS AT BEAM ENDS SHALL BE INCLUDED FOR PAYMENT UNDER THE ITEM "LOCALIZED PAINT REMOVAL AND FIELD PAINTING OF EXISTING STEEL."

5. THE COLOR OF THE TOP COAT ON THE STRUCTURAL STEEL SHALL CONFORM TO FEDERAL STANDARD COLOR NUMBER 36463 (GRAY).

6. PRIOR TO POWER TOOL CLEANING, ALL CORNERS AND EDGES SHALL BE ROUNDED TO $^1/_{16}$" RADIUS OR CHAMFERED TO $^1/_{16}$" CHAMFER. ALL FINS SLIVERS AND TEARS SHALL BE REMOVED AND GROUND SMOOTH. ALL ROUGH SURFACES SHALL BE GROUND SMOOTH. FLAME CUT EDGES SHALL BE GROUND OVER THEIR ENTIRE SURFACE SUCH THAT ANY HARDENED SURFACE LAYER IS REMOVED, AND SUBSEQUENT POWER TOOL CLEANING PRODUCES THE SPECIFIED SURFACE PROFILE DEPTH.

7. PRIOR TO APPLYING THE HEAT OF WELDING/CUTTING EQUIPMENT TO LOCALIZED AREAS OF EXISTING STEEL, THE EXISTING PAINT SHALL BE REMOVED ON EACH FACE OF THE STEEL TO A WIDTH OF 6 INCHES FROM WHEREVER THE HEAT WILL BE APPLIED, OR AS DIRECTED BY THE ENGINEER.

ELASTOMERIC BEARING NOTES

1. THE ELASTOMERIC BEARINGS ARE DESIGNED USING METHOD B OF THE AASHTO LRFD BRIDGE DESIGN SPECIFICATIONS.

2. THE CONTRACTOR SHALL RECORD THE GRADE OF THE EXISTING BEAMS OR SOLE PLATES TO ACCURATELY PRODUCE NEW BEVELED SOLE PLATES. THE BOTTOM SURFACE OF THE NEW SOLE PLATE SHALL BE LEVEL AFTER INSTALLATION.

3. THE ELASTOMER SHALL CONTAIN ONLY VIRGIN POLYCHLOROPRENE (NEOPRENE) AS THE RAW POLYMER AND HAVE A SPECIFIED SHEAR MODULUS OF 0.095 KSI.

4. THE INTERNAL STEEL LAMINAE SHALL CONFORM TO ASTM A 1011, GRADE 36.

5. THE STEEL FOR THE BEVELED SOLE PLATES SHALL CONFORM TO THE REQUIREMENTS OF AASHTO M270, GRADE 36T2.

6. THE BEVELED SOLE PLATE SHALL BE HOT BONDED TO THE ELASTOMERIC BEARING DURING VULCANIZATION AS SHOWN ON THE PLANS.

7. WELDING DETAILS, PROCEDURES AND TESTING METHODS SHALL CONFORM TO THE ANSI/AASHTO/AWS D1.5:2008 - BRIDGE WELDING CODE, UNLESS OTHERWISE NOTED ON THE PLANS.

8. THE EXPOSED SURFACES OF THE ELASTOMER SHALL NOT BE PAINTED.

9. THE ELASTOMERIC BEARING SHALL BE INSTALLED WHEN THE AMBIENT AIR TEMPERATURE IS BETWEEN 40° F AND 80° F AND HAS BEEN WITHIN THIS RANGE FOR AT LEAST TWO HOURS.

10. THE COST OF REMOVING THE EXISTING BEARINGS, FURNISHING, AND INSTALLING THE ELASTOMERIC BEARINGS, INCLUDING THE BEVELED SOLE PLATES, SHALL BE PAID FOR UNDER THE ITEM, "BEARING REPLACEMENT WITH ELASTOMERIC BEARING PADS."

11. JACKING OF BEAMS FOR REPLACING BEARINGS SHALL BE PAID FOR UNDER THE ITEM, "JACKING EXISTING SUPERSTRUCTURE (SITE NO.)."

12. REMOVAL OF PAINT, SURFACE PREPARARTION AND PAINTING OF THE BEVELED SOLE PLATES SHALL BE PAID FOR UNDER THE ITEM "LOCALIZED PAINT REMOVAL AND FIELD PAINTING OF EXISTING STEEL (SITE NO.)."

13. THE FURNISHING AND WELDING OF STEEL PLATES OVER SLOTTED HOLES IN BOTTOM FLANGES OF BEAMS WHERE ANCHOR BOLTS HAVE BEEN REMOVED FOR BEARING REPLACEMENT SHALL BE PAID FOR UNDER THE ITEM, "BEARING REPLACEMENT WITH ELASTOMERIC BEARING PADS."

FIXED BEARING NOTES

1. PRIOR TO JACKING THE BEAM END FOR BEARING REPLACEMENT THE PAINT SHALL BE REMOVED FROM THE EXISTING BEAM END AND FIXED BEARING. THIS WORK TO BE INCLUDED FOR PAYMENT UNDER THE ITEM "LOCALIZED PAINT REMOVAL AND FIELD PAINTING OF EXISTING STEEL (SITE NO. 3)".

2. THE JACKING OF BEAMS REQUIRED FOR THE REPLACEMENT OF FIXED BEARINGS TO BE INCLUDED FOR PAYMENT UNDER THE ITEM "JACKING EXISTING SUPERSTRUCTURE (SITE NO. 3)."

3. REMOVAL AND DISPOSAL OF THE EXISTING SOLE PLATE, MASONRY PLATE AND ANCHOR BOLTS TO BE INCLUDED FOR PAYMENT UNDER THE ITEM "REMOVAL OF EXISTING STEEL."

4. ALL STEEL PLATES FOR THE FIXED BEARINGS SHALL CONFORM TO THE REQUIREMENTS OF AASHTO M270 GRADE 36T2.

5. ALL NEW STEEL PLATES FOR THE FIXED BEARINGS TO BE INCLUDED FOR PAYMENT UNDER THE ITEM "STRUCTURAL STEEL".

6. THE $^1/_8$" PREFABRICATED PAD SHALL BE A 90 DUROMETER ELASTOMERIC PAD AND BE INCLUDED FOR PAYMENT UNDER THE ITEM "STRUCTURAL STEEL".

7. ANCHOR BOLTS SHALL CONFORM TO ASTM F 1554, GRADE 55 AND BE GALVANIZED IN ACCORDANCE WITH ASTM A 153, CLASS C.

8. EXISTING ANCHOR NUTS ARE NOT TO BE REUSED. NUTS SHALL BE PREVAILING-TORQUE LOCK NUTS AND CONFORM TO ASTM A 563, GRADE DH. EXISTING WASHERS ARE NOT TO BE REUSED. WASHERS SHALL CONFORM TO ASTM F 436, TYPE 1 AND SHALL BE QUENCHED AND TEMPERED. NUTS AND WASHERS SHALL BE GALVANIZED IN ACCORDANCE WITH ASTM A 153, CLASS C.

9. NUTS SHALL BE DRAWN UP FINGER TIGHT THEN BACKED OFF $^1/_8$" OF A TURN, THREADS SHALL BE BURRED TO PREVENT THE NUT FROM BACKING OFF.

10. FURNISHING AND INSTALLING OF THE ANCHOR BOLTS, NUTS AND WASHERS SHALL BE INCLUDED FOR PAYMENT UNDER THE ITEM "DRILLING HOLES AND GROUTING ANCHOR BOLTS."

11. ALL STEEL WITHIN THE PAINTING LIMITS, INCLUDING THE NEW PLATES SHALL BE PAINTED. PAINTING SHALL BE INCLUDED FOR PAYMENT UNDER THE ITEM "LOCALIZED PAINT REMOVAL AND FIELD PAINTING OF EXISTING STEEL (SITE NO. 3)."

12. GREASE USED FOR THE MATING SURFACE OF THE SOLE PLATE AND THE PIN PLATE SHALL BE LITHIUM COMPLEX GREASE WITH 3% MOLYBDENUM DISULFIDE AND SHALL HAVE EXTREME PRESSURE AND ANTI-CORROSION ADDITIVES MEETING THE REQUIREMENTS OF ASTM D 1743. AND SHALL BE INCLUDED FOR PAYMENT UNDER THE ITEM "STRUCTURAL STEEL."

13. WELDING DETAILS, PROCEDURES AND TESTING METHODS SHALL CONFORM TO THE ANSI/AASHTO/AWS D1.5:2008 - BRIDGE WELDING CODE.

NOTICE TO BRIDGE INSPECTORS

THE DEPARTMENT'S BRIDGE SAFETY PROCEDURES REQUIRE THIS BRIDGE TO BE INSPECTED FOR, BUT NOT LIMITED TO, ALL APPROPRIATE COMPONENTS INDICATED IN THE GOVERNING MANUALS FOR BRIDGE INSPECTION. ATTENTION MUST BE GIVEN TO INSPECTING THE FOLLOWING SPECIAL COMPONENTS AND DETAILS. (THE LISTING OF COMPONENTS FOR SPECIFIC ATTENTION SHALL NOT BE CONSTRUED TO REDUCE THE IMPORTANCE OF INSPECTION OF ANY OTHER COMPONENT OF THE STRUCTURE). THE FREQUENCY OF INSPECTION OF THIS STRUCTURE SHALL BE IN ACCORDANCE WITH THE GOVERNING MANUALS FOR BRIDGE INSPECTION, UNLESS OTHERWISE DIRECTED BY THE MANAGER OF BRIDGE SAFETY AND EVALUATION.

COMPONENT OR DETAIL	BRIDGE SHEET REFERENCE
FOLLOW NORMAL INSPECTION PROCEDURES.	_____

RIVET REPLACEMENT NOTES

1. BEFORE REMOVING RIVETS AT BRIDGES WITH LEAD-BASED PAINT REMOVE PAINT AROUND EACH RIVET TO BE REPLACED A MINIMUM OF 6 INCHES AROUND THE RIVET. AT BRIDGES WITHOUT LEAD-BASED PAINT RIVETS MAY BE REMOVED WITHOUT FIRST REMOVING PAINT.

2. ALL LEAD PAINT AND DEBRIS BEING REMOVED SHALL BE PROPERLY CONTAINED AND DISPOSED OF IN ACCORDANCE WITH THE SPECIAL PROVISIONS "BOLT AND RIVET REPLACEMENT" AND "DISPOSAL OF LEAD DEBRIS".

3. REPLACEMENT OF RIVET SHALL BE DETERMINED BY ENGINEER. ACCESS FOR THE ENGINEER TO DETERMINE RIVET REPLACEMENT LOCATIONS SHALL BE PROVIDED BY THE CONTRACTOR.

4. REMOVE A 7/8" DIA. RIVET AND REPLACE WITH A 7/8" HIGH STRENGTH BOLT BEFORE REMOVING ANOTHER RIVET. DIAMETER OF THE RESULTANT HOLE MUST NOT BE MORE THAN 1/16" LARGER THAN THE MATING BOLT. IF THIS CONDITION IS NOT MET, PROVIDE A HIGH STRENGTH BOLT IN A LARGER DIAMETER AS DIRECTED BY THE ENGINEER.

5. HIGH STRENGTH (H.S.) BOLTS SHALL CONFORM TO ASTM A325 TYPE 1. HEX NUTS SHALL CONFORM TO ASTM A563, GRADE DH OR DH3, OR ASTM A194, GRADE 2H. HARDENED STEEL WASHER SHALL CONFORM TO ASTM F436.

6. ALL BOLTS, NUTS AND HARDENED WASHERS SHALL BE HOT DIP GALVANIZED IN ACCORDANCE WITH ASTM A153. HARDENED WASHERS SHALL BE PLACED UNDER THE TURNED ELEMENT.

7. ALL BOLTS SHALL BE LUBRICATED PRIOR TO INSTALLATION TO ENSURE FREE ROTATION OF THE NUT ON THE BOLT THREADS.

8. AFTER HIGH STRENGTH BOLTS HAVE BEEN INSTALLED, ALL AREAS OF PAINT REMOVAL SHALL BE TOUCHED UP WITH PAINT IN ACCORDANCE WITH THE SPECIAL PROVISION "BOLT AND RIVET REPLACEMENT".

9. ACCESS, LOCALIZED PAINT REMOVAL, RIVET REMOVAL, HIGH STRENGTH BOLT INSTALLATION AND FIELD TOUCH UP PAINTING SHALL BE INCLUDED FOR PAYMENT UNDER THE ITEM "BOLT AND RIVET REPLACEMENT".

WEEP PIPE NOTES

1. FOR LOCATIONS OF WEEP PIPE REPAIRS SEE APPLICABLE FRAMING PLANS.

2. THE COLOR OF THE POLYVINYL CHLORIDE PLASTIC PIPE SHALL BE WHITE.

3. ALL POLYVINYL CHLORIDE PLASTIC PIPE SHALL BE JOINED USING AN APPROVED SOLVENT CEMENT.

4. U-BOLTS AND ALL OTHER BOLTS SHALL CONFORM TO ASTM A 307 GRADE A. ALL NUTS SHALL CONFORM TO THE REQUIREMENTS OF ASTM A 563, GRADE DH OR DH3. ALL WASHERS SHALL BE STANDARD SIZE CONFORMING TO ASTM F 844.

5. ALL BOLTS, U-BOLTS, NUTS, LOCK NUTS, AND WASHERS SHALL BE GALVANIZED IN CONFORMANCE WITH ASTM A 153.

6. U-BOLTS SHALL BE INSTALLED WITH WASHERS AND DOUBLE NUTS TO PREVENT LOOSENING OF THE NUTS, LOCK NUTS ARE NOT ALLOWED. THE LENGTH OF THE U-BOLT THREADS SHALL BE SUFFICIENT TO FULLY ENGAGE THE DOUBLE NUTS.

7. THE COST OF FURNISHING AND INSTALLING THE WEEP PIPES, INCLUDING, BUT NOT LIMITED TO, THE PIPE, ELBOWS, COUPLINGS, U-BOLTS, ACCESS TO THE EXISTING WEEP PIPE, AND ALL HARDWARE SHALL BE INCLUDED FOR PAYMENT UNDER THE ITEM "EXTEND EXISTING WEEPHOLES".

8. THE COST OF FURNISHING AND INSTALLING STEEL PLATES FOR THE SUPPORT OF WEEP PIPES SHALL BE INCLUDED FOR PAYMENT UNDER THE ITEM "STRUCTURAL STEEL - MISCELLANEOUS".

9. PAINT REMOVAL AND PAINTING WHERE REQUIRED FOR INSTALLING STEEL PLATES SHALL BE INCLUDED FOR PAYMENT UNDER THE ITEM "LOCALIZED PAINT REMOVAL AND FIELD PAINTING OF EXISTING STEEL".

10. ALL BOLT HOLES SHALL BE STANDARD HOLES, ($^1/_{16}$" LARGER THAN THE BOLT DIAMETER) UNLESS OTHERWISE NOTED.

11. THE COUPLERS SHALL CONFORM TO THE REQUIREMENTS OF ASTM D 2466 OR ASTM D 2467.

12. THE OFFSET PIPE CLAMPS SHALL BE GALVANIZED IN CONFORMANCE WITH ASTM A 123 AND HARDWARE SHALL BE GALVANIZED IN CONFORMANCE WITH ASTM A 153.

TABLE OF ORIGINAL PROJECT INFORMATION

SITE NO.	BRIDGE NO.	PROJECT NO.	DATE
1	03148	33-66	1962
2	02366	42-134	1962
3	02369	42-134	1962
4	02378	42-134	1962
5	01275	48-153	1989
6	01702	53-100	1962
7	01703	53-100	1962
8	01704B	53-100	1962
9	03400A	63-141	1964
10	01831	79-83	1962
11	01837	79-83	1962
12	00629	82-266	2000
13	00630	82-266	2000
15	04283	142-110	1976
17	03519	33-68	1965
18	03520	33-68	1965
19	00638	82-212	1985
20	01469D	63-161	1962

INSPECTION OF FIELD WELDS

METHOD	UNIT	AMOUNT
ULTRASONIC	IN.	0
MAGNETIC PARTICLE	L.F.	0

REV.	DATE	REVISION DESCRIPTION	SHEET NO.
-	-	-	-
-	-	-	-
-	-	-	-
-	-	-	-
-	-	-	-
-	-	-	-

THE INFORMATION, INCLUDING ESTIMATED QUANTITIES OF WORK, SHOWN ON THESE SHEETS IS BASED ON LIMITED INVESTIGATIONS BY THE STATE AND IS IN NO WAY WARRANTED TO INDICATE THE CONDITIONS OF ACTUAL QUANTITIES OF WORK WHICH WILL BE REQUIRED.

Plotted Date: 1/3/2013

DESIGNER/DRAFTER: JCM
CHECKED BY: JCM

STATE OF CONNECTICUT
DEPARTMENT OF TRANSPORTATION

Filename: ...\SB_MSH_01710359_GENERAL_NOTES.dgn

SIGNATURE/BLOCK:
OFFICE OF ENGINEERING
APPROVED BY:

PROJECT TITLE:
BEAM END AND BEARING REPAIRS IN DISTRICT 1

TOWN: VARIOUS

DRAWING TITLE:
GENERAL NOTES

PROJECT NO. 171-359
DRAWING NO. S-2
SHEET NO. 03.02

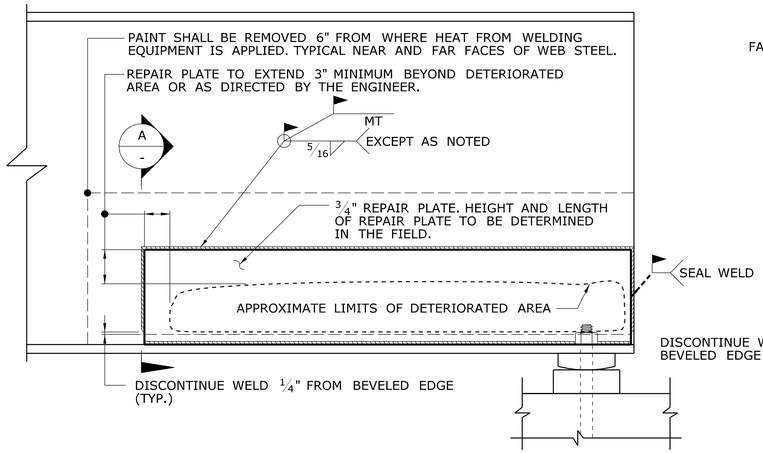

BEAM END ELEVATION

SCALE: 1 1/2" = 1'-0"

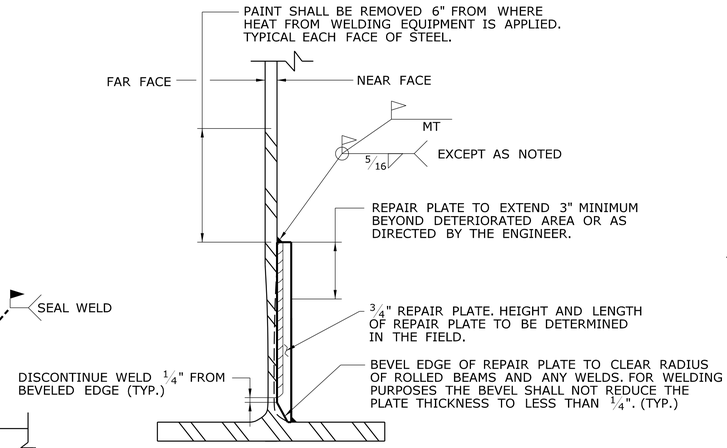

SECTION A / -

SCALE: 3" = 1'-0"

DETAIL A

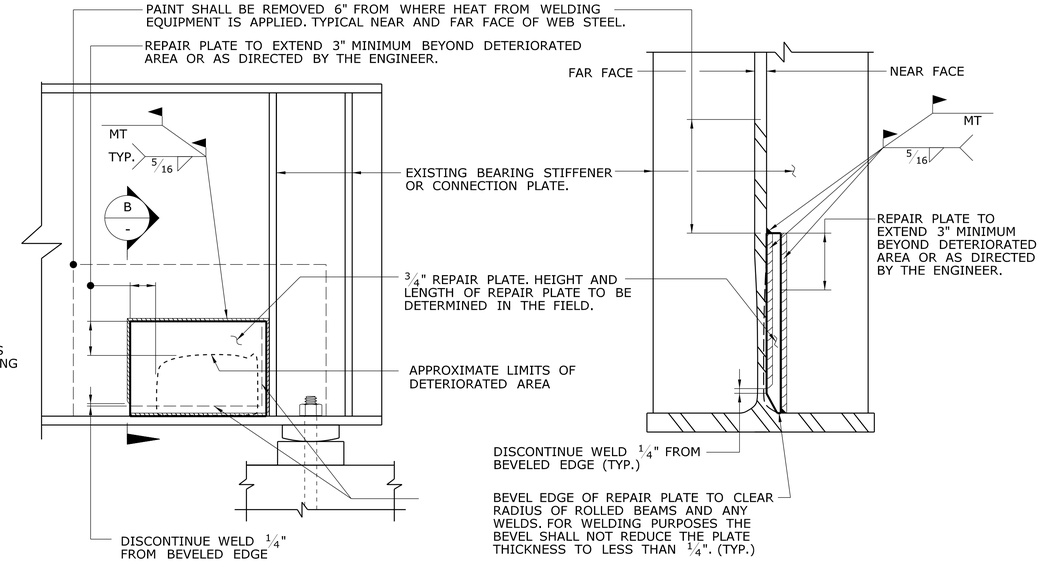

BEAM END ELEVATION

SCALE: 1 1/2" = 1'-0"

SECTION B / -

SCALE: 3" = 1'-0"

DETAIL B

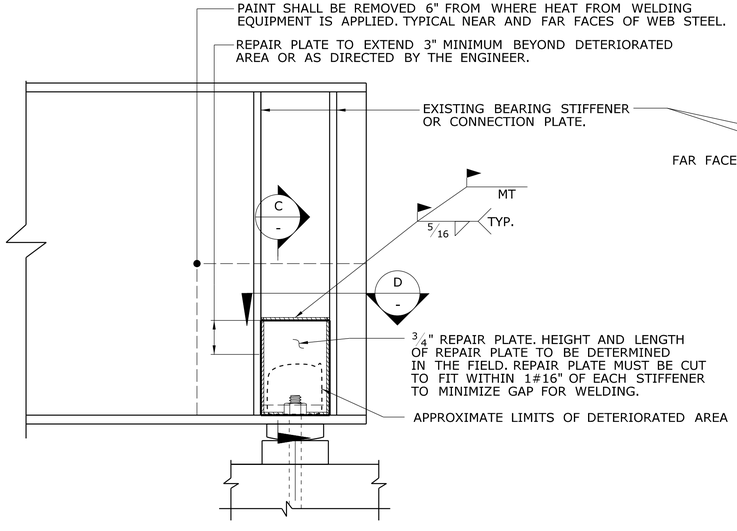

BEAM END ELEVATION

SCALE: 1 1/2" = 1'-0"

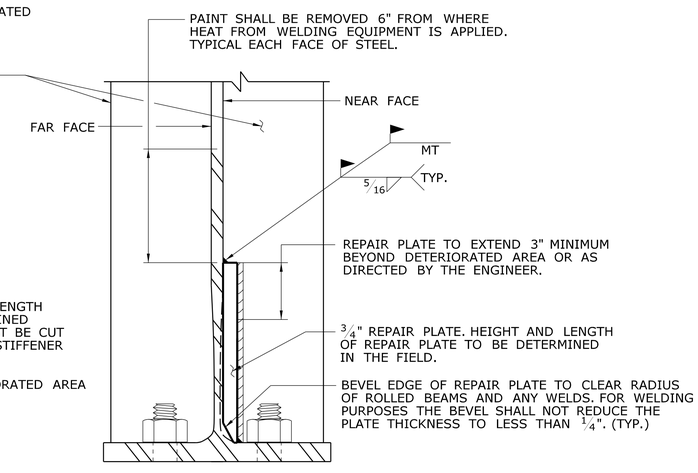

SECTION C / -

SCALE: 3" = 1'-0"

DETAIL C

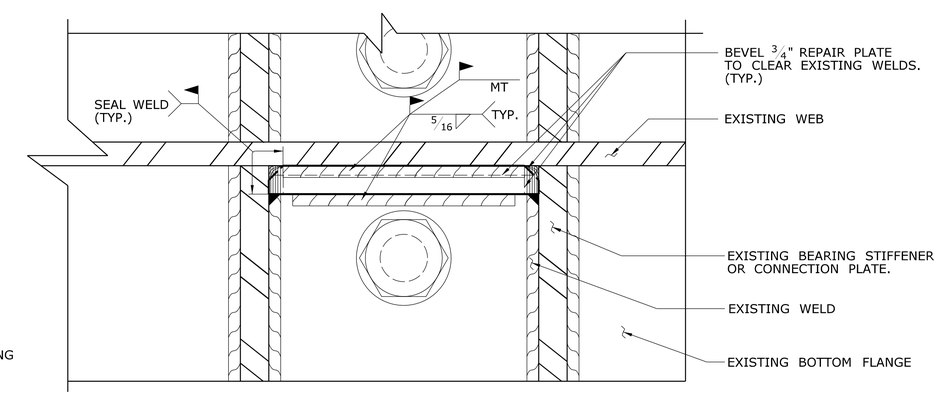

SECTION D / -

SCALE: 6" = 1'-0"

FOR SPECIFIC WORK AND HOW IT IS PAID FOR SEE "REHABILITATION OF EXISTING STRUCTURAL STEEL NOTES" ON DRAWING NO. S-2.

REV.	DATE	REVISION DESCRIPTION	SHEET NO.
-	-	-	-
-	-	-	-
-	-	-	-
-	-	-	-
-	-	-	-
-	-	-	-

THE INFORMATION, INCLUDING ESTIMATED QUANTITIES OF WORK, SHOWN ON THESE SHEETS IS BASED ON LIMITED INVESTIGATIONS BY THE STATE AND IS IN NO WAY WARRANTED TO INDICATE THE CONDITIONS OF ACTUAL QUANTITIES OF WORK WHICH WILL BE REQUIRED.

Plotted Date: 1/2/2013

DESIGNER/DRAFTER: JCM

CHECKED BY: JCM

SCALE AS NOTED

STATE OF CONNECTICUT
DEPARTMENT OF TRANSPORTATION

Filename: ...\SB_MSH_01710359_STEEL_REPAIR_STANDARD_DETAILS_1.dgn

SIGNATURE/ BLOCK:

OFFICE OF ENGINEERING

APPROVED BY:

PROJECT TITLE:

BEAM END AND BEARING REPAIRS IN DISTRICT 1

TOWN: **DISTRICT 1**

DRAWING TITLE: **STEEL REPAIR DETAILS 1**

PROJECT NO. **171-359**

DRAWING NO. **S-3**

SHEET NO. 03.03

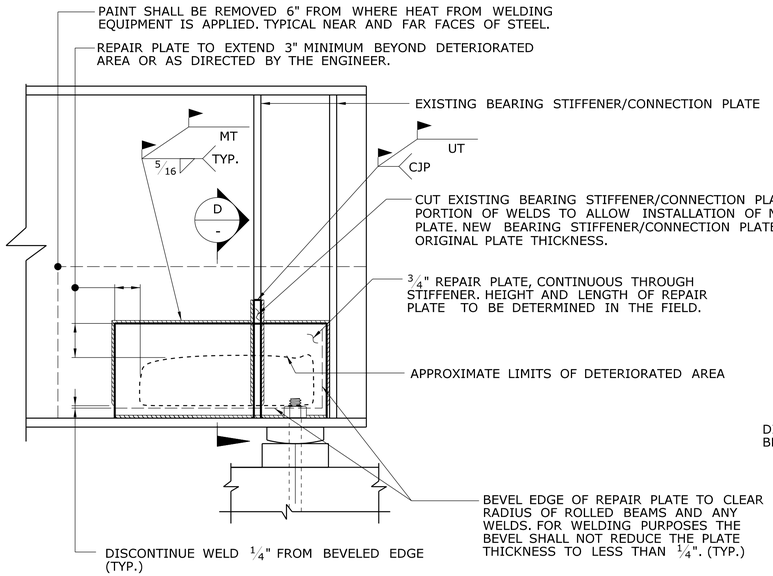

BEAM END ELEVATION

SCALE: 1 1/2" = 1'-0"

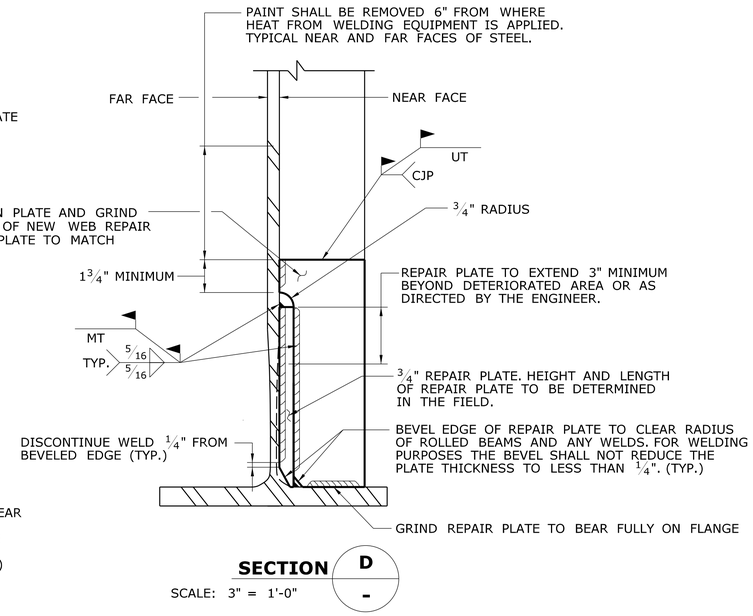

SECTION D

SCALE: 3" = 1'-0"

DETAIL D

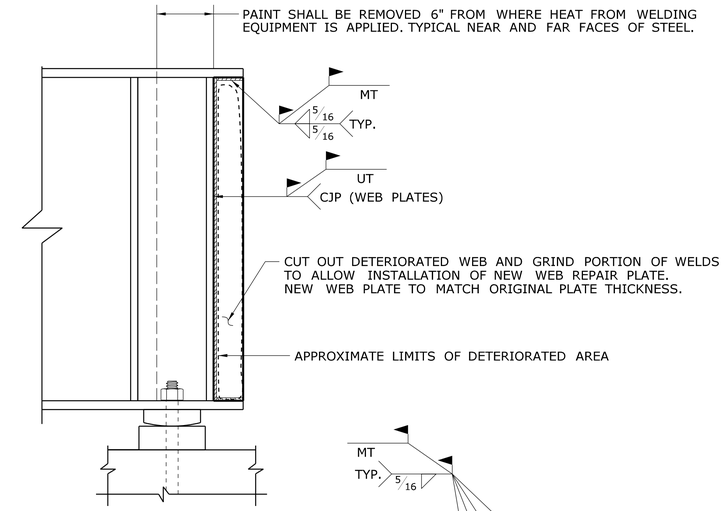

DETAIL E

SCALE: 1 1/2" = 1'-0"

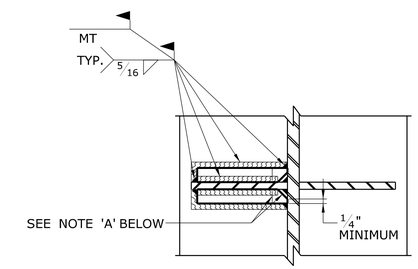

NOTE 'A':
BEVEL EDGE OF REPAIR PLATE TO CLEAR RADIUS OF ROLLED BEAMS AND ANY WELDS. FOR WELDING PURPOSES THE BEVEL SHALL NOT REDUCE THE PLATE THICKNESS TO LESS THAN 1/4". (TYP.)

SECTION GG

SCALE: 3" = 1'-0"

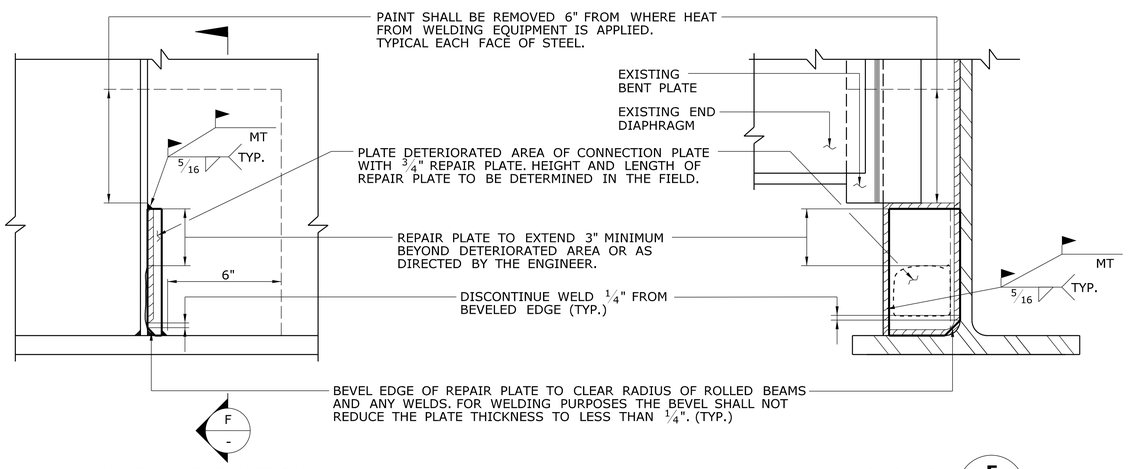

BEAM END ELEVATION

SCALE: 3" = 1'-0"

SECTION F

SCALE: 3" = 1'-0"

DETAIL F

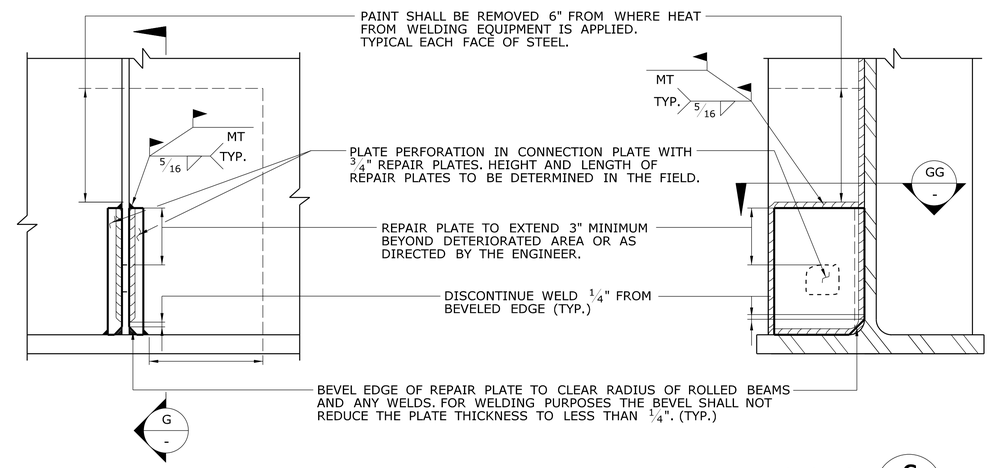

BEAM END ELEVATION

SCALE: 3" = 1'-0"

SECTION G

SCALE: 3" = 1'-0"

FOR SPECIFIC WORK AND HOW IT IS PAID FOR SEE "REHABILITATION OF EXISTING STRUCTURAL STEEL NOTES" ON DRAWING NO. S-2.

DETAIL G

REV.	DATE	REVISION DESCRIPTION	SHEET NO.
-	-	-	-
-	-	-	-
-	-	-	-
-	-	-	-
-	-	-	-
-	-	-	-

THE INFORMATION, INCLUDING ESTIMATED QUANTITIES OF WORK, SHOWN ON THESE SHEETS IS BASED ON LIMITED INVESTIGATIONS BY THE STATE AND IS IN NO WAY WARRANTED TO INDICATE THE CONDITIONS OF ACTUAL QUANTITIES OF WORK WHICH WILL BE REQUIRED.

Plotted Date: 1/2/2013

DESIGNER/DRAFTER: JCM
CHECKED BY: JCM
SCALE AS NOTED

STATE OF CONNECTICUT
DEPARTMENT OF TRANSPORTATION

Filename: ...\SB_MSH_01710359_STEEL_REPAIR_STANDARD_DETAILS_2.dgn

SIGNATURE/ BLOCK:
OFFICE OF ENGINEERING
APPROVED BY:

PROJECT TITLE:
BEAM END AND BEARING REPAIRS IN DISTRICT 1

TOWN: DISTRICT 1
DRAWING TITLE: STEEL REPAIR DETAILS 2

PROJECT NO. 171-359
DRAWING NO. S-4
SHEET NO. 03.04

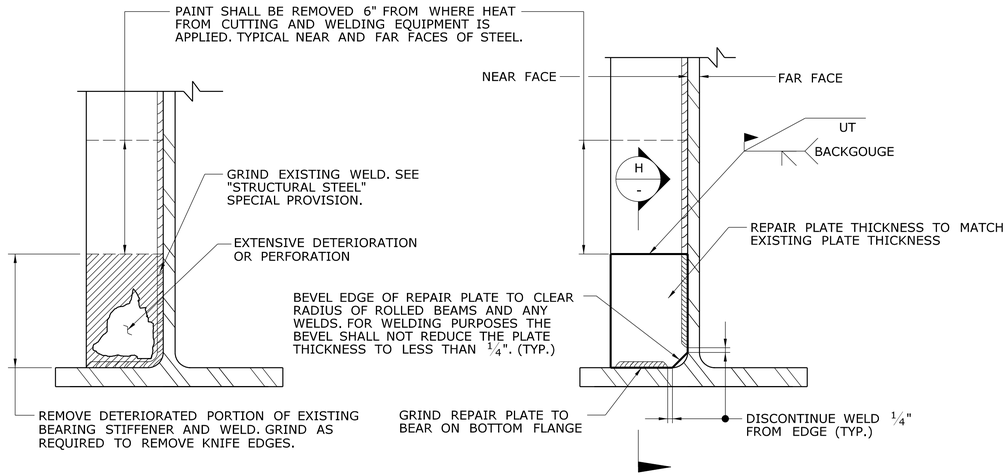

EXISTING ELEVATION

SCALE: 3" = 1'-0"

PROPOSED ELEVATION

SCALE: 3" = 1'-0"

DETAIL H

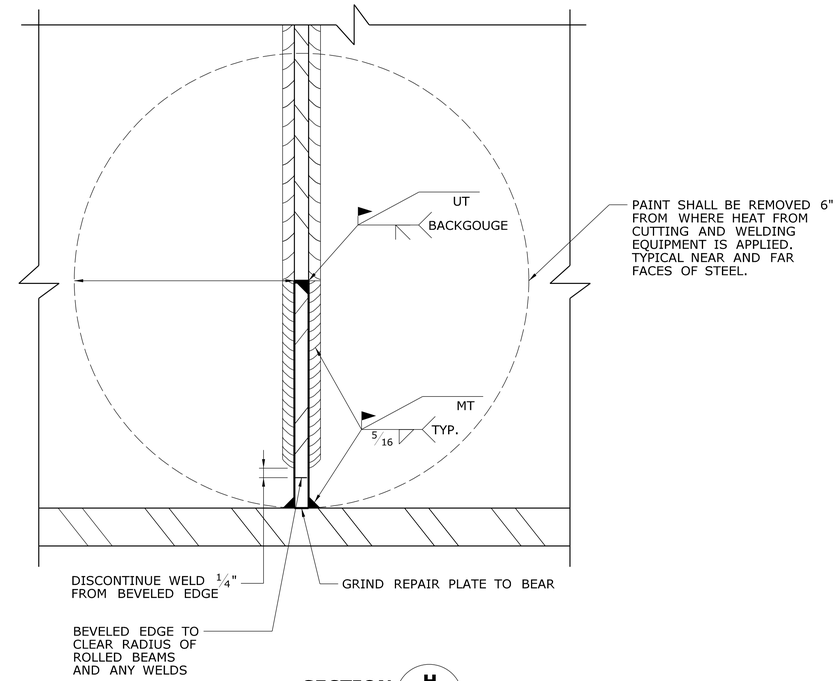

SECTION H

SCALE: 6" = 1'-0"

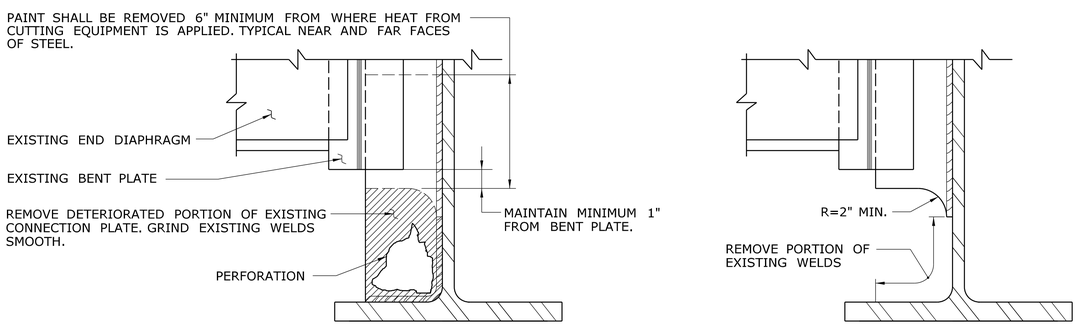

EXISTING ELEVATION

PROPOSED ELEVATION

DETAIL I - DETERIORATION IN CONNECTION PLATE

SCALE: 3" = 1'-0"

FOR SPECIFIC WORK AND HOW IT IS PAID FOR SEE "REHABILITATION OF EXISTING STRUCTURAL STEEL NOTES" ON DRAWING NO. S-2.

GENERAL STEEL REPAIR NOTES

FOR PROPOSED LOCATIONS OF PLATING OVER DETERIORATED STEEL, SEE APPLICABLE BRIDGE FRAMING PLANS. TABLES ARE PROVIDED DELINEATING AREAS OF SECTION LOSS GREATER THAN 25% OF THE ORIGINAL MATERIAL THICKNESS BASED ON INFORMATION PROVIDED IN THE LATEST BRIDGE INSPECTION REPORTS.

IN THE EVENT THAT ADDITIONAL DETERIORATION IS FOUND AT BEAM END LOCATIONS OTHER THAN INDICATED ON THE FRAMING PLANS, THE FOLLOWING NOTES MAY BE USED FOR THE REPAIR GUIDELINES.

WEBS & CONNECTION PLATES:

SECTION LOSS FOUND TO BE LESS THAN 25% AFTER PAINT REMOVAL SHALL ONLY BE RECOATED WITH THE APPROVED COATING SYSTEM.

SECTION LOSS FOUND TO BE GREATER THAN 25% BUT LESS THAN 50% ON ONE SIDE OF THE WEB AFTER PAINT REMOVAL SHALL HAVE A PLATE INSTALLED ON THE DETERIORATED SIDE ONLY AND THEN BE RECOATED WITH THE APPROVED COATING SYSTEM. DETERIORATION ON BOTH SIDES OF THE WEB MEETING THE ABOVE CRITERIA SHALL BE PLATED ON BOTH SIDES.

SECTION LOSS FOUND ON OPPOSING FACES OF STEEL WITH A CUMULATIVE SECTION LOSS GREATER THAN 25% BUT LESS THAN 50% AFTER PAINT REMOVAL PLATE THE FACE WITH THE GREATER DEPTH OF SECTION LOSS.

SECTION LOSS FOUND ON OPPOSING FACES OF STEEL WITH A CUMULATIVE SECTION LOSS GREATER THAN 50% AFTER PAINT REMOVAL PLATE BOTH FACES.

SECTION LOSS GREATER THAN 50% OR PERFORATIONS SHALL BE PLATED ON BOTH SIDES OF THE WEB THEN BE RECOATED WITH THE APPROVED COATING SYSTEM. PERFORATIONS SHALL BE BROUGHT TO THE ATTENTION OF THE ENGINEER PRIOR TO REPAIRING.

BEARING STIFFENERS:

SECTION LOSS FOUND TO BE GREATER THAN 20% AFTER PAINT REMOVAL SHALL BE CUT OUT AND REPLACED IN KIND. THE REPAIR SHALL THEN BE RECOATED WITH THE APPROVED COATING SYSTEM.

BOTTOM FLANGES:

SECTION LOSS FOUND IN THE BOTTOM FLANGE IN THE AREAS WHERE THE PROPOSED BEARING SOLE PLATE IS TO BE WELDED SHALL BE PAINTED IF THE ALLOWABLE ROOT OPENING FALLS WITHIN THE LIMITS SPECIFIED IN THE AASHTO/ AWS D1.5 BRIDGE WELDING CODE. OUTSIDE OF THESE LIMITS THE ENGINEER SHALL BE NOTIFIED IMMEDIATELY.

BOTTOM FLANGE LOSS OUTSIDE THE LIMITS OF BEARING REPLACEMENT BUT IN AREAS OF PROPOSED WORK, SHALL BE BROUGHT TO THE ATTENTION OF THE ENGINEER IMMEDIATELY.

REV.	DATE	REVISION DESCRIPTION	SHEET NO.
-	-	-	-
-	-	-	-
-	-	-	-
-	-	-	-
-	-	-	-
-	-	-	-

THE INFORMATION, INCLUDING ESTIMATED QUANTITIES OF WORK, SHOWN ON THESE SHEETS IS BASED ON LIMITED INVESTIGATIONS BY THE STATE AND IS IN NO WAY WARRANTED TO INDICATE THE CONDITIONS OF ACTUAL QUANTITIES OF WORK WHICH WILL BE REQUIRED.

Plotted Date: 1/2/2013

DESIGNER/DRAFTER: JCM

CHECKED BY: JCM

SCALE AS NOTED

STATE OF CONNECTICUT
DEPARTMENT OF TRANSPORTATION

Filename: ...\SB_MSH_01710359_STEEL_REPAIR_STANDARD_DETAILS_3.dgn

SIGNATURE/ BLOCK:

OFFICE OF ENGINEERING

APPROVED BY:

PROJECT TITLE:

BEAM END AND BEARING REPAIRS IN DISTRICT 1

TOWN: DISTRICT 1

DRAWING TITLE: STEEL REPAIR DETAILS 3

PROJECT NO. 171-359

DRAWING NO. S-5

SHEET NO. 03.05

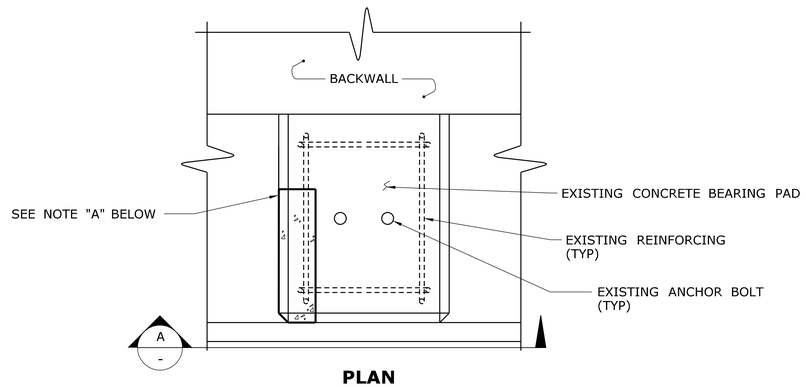

PLAN

SCALE: $1\frac{1}{2}$"=1'-0"

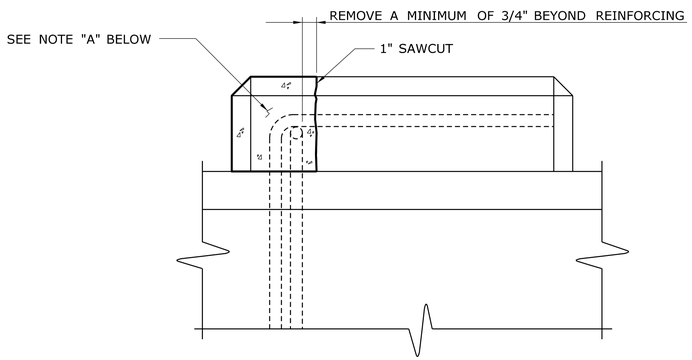

SECTION A -

SCALE: 3"=1'-0"

NOTE "A" - REMOVE ALL DETERIORATED, LOOSE AND SPALLED CONCRETE A MINIMUM OF $\frac{3}{4}$" BEYOND REINFORCING TO PROVIDE ADEQUATE ANCHORAGE OF NEW CONCRETE OR AS DIRECTED BY THE ENGINEER. PROVIDE A 1/2" SAW CUT ALONG PERIMETER OF REPAIR AREA. NEW CONCRETE TO MATCH EXISTING PAD PROFILE. THIS WORK TO BE INCLUDED FOR PAYMENT UNDER THE ITEM "REPAIR OF BEARING PAD".

NOTE "B" - REPAIR TREATMENT AT ABUTMENT CONCRETE BEARING PAD SHOWN, REPAIR TREATMENT AT PIER CONCRETE BEARING PAD SIMILAR.

REPAIR OF CONCRETE BEARING PAD DETAILS

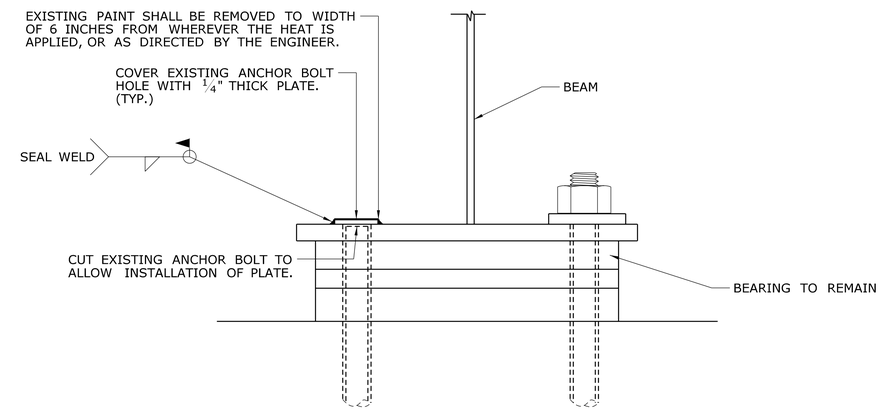

DETAIL FOR TREATMENT OF DETERIORATED ANCHOR BOLTS

SCALE: 3"= 1'-0"

NOTE: REMOVAL OF ANCHOR BOLT NUTS AND PORTIONS OF DETERIORATED ANCHOR BOLTS AND INSTALLATION OF $\frac{1}{4}$" STEEL PLATES TO BE PAID FOR UNDER THE ITEM "REPAIR ANCHOR BOLTS".

REV.	DATE	REVISION DESCRIPTION	SHEET NO.
-	-	-	-
-	-	-	-
-	-	-	-
-	-	-	-
-	-	-	-
-	-	-	-

THE INFORMATION, INCLUDING ESTIMATED QUANTITIES OF WORK, SHOWN ON THESE SHEETS IS BASED ON LIMITED INVESTIGATIONS BY THE STATE AND IS IN NO WAY WARRANTED TO INDICATE THE CONDITIONS OF ACTUAL QUANTITIES OF WORK WHICH WILL BE REQUIRED.

Plotted Date: 1/2/2013

DESIGNER/DRAFTER: JCM

CHECKED BY: JCM

SCALE AS NOTED

STATE OF CONNECTICUT
DEPARTMENT OF TRANSPORTATION

Filename: ...\SB_MSH_01710359_MISCELLANEOUS_REPAIR_DETAILS_1.dgn

SIGNATURE/ BLOCK:

OFFICE OF ENGINEERING

APPROVED BY:

PROJECT TITLE:

BEAM END AND BEARING REPAIRS IN DISTRICT 1

TOWN: DISTRICT 1

DRAWING TITLE: MISCELLANEOUS REPAIR DETAILS

PROJECT NO. 171-359

DRAWING NO. S-6

SHEET NO. 03.06

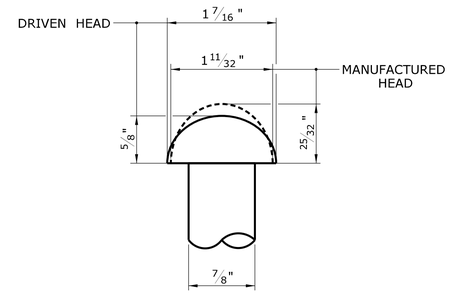

CONDITION A - ORIGINAL RIVET

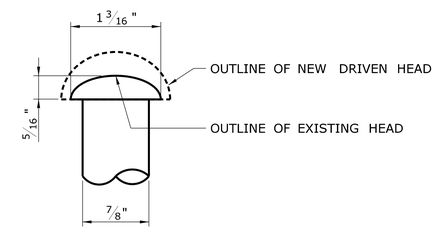

CONDITION B - MINIMUM UNCONDITIONAL ACCEPTANCE

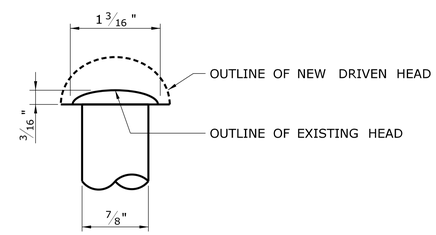

CONDITION C - MINIMUM CONDITIONALLY ACCEPTABLE

RIVET REPLACEMENT CRITERIA

DETERIORATED RIVET REPLACEMENT NOTES

1. THE COST OF REPLACING DETERIORATED RIVETS IN ACCORDANCE WITH THIS SHEET SHALL BE INCLUDED IN THE COST OF THE ITEM "BOLT AND RIVET REPLACEMENT".

2. AFTER CLEANING OF THE STEEL, ACCESS SHALL BE PROVIDED BY THE CONTRACTOR AND THE ENGINEER SHALL BE NOTIFIED SO THAT HE MAY MAKE A COMPLETE INSPECTION TO DETERMINE WHICH RIVETS REQUIRE REPLACEMENT. DETERIORATED RIVETS NOT COVERED UNDER NOTE #1 ABOVE WILL BE INSPECTED BY THE ENGINEER WHO WILL ORDER THAT SPECIFIC RIVETS SHALL BE REPLACED WITH HIGH STRENGTH BOLTS IN ACCORDANCE WITH THE FOLLOWING GUIDELINES:

3. RIVETS (CONDITION B) WITH DIMENSIONS OF BOTH HEADS MEETING OR SURPASSING EACH OF THE MINIMUM REQUIREMENTS SHOWN FOR CONDITION B MAY BE LEFT IN PLACE SUBJECT TO CONDITIONS DESCRIBED IN NOTES 6 AND 7.

4. RIVETS (CONDITION C) NOT MEETING THE REQUIREMENTS OF CONDITION B, BUT HAVING DIMENSIONS WHICH MEET OR SURPASS AT BOTH HEADS EACH OF THE MINIMUM REQUIREMENTS SHOWN FOR CONDITION C MAY BE LEFT IN PLACE SUBJECT TO THE FOLLOWING CONDITIONS:

   A) THERE IS NO PRYING ACTION FROM APPLIED STRESS OR CREVICE CORROSION (SEE NOTE 7) WHICH TENDS TO SEPARATE THE CONNECTED PARTS.
   B) RIVETS HEADS DO NOT HAVE ADDITIONAL LOSSES DESCRIBED IN NOTE 6.
   C) RIVETS MAY BE LEFT IN PLACE TO THE EXTENT THAT THEIR NUMBER DOES NOT EXCEED 15% OF CONNECTION RIVETS IN ANY ONE CONNECTION OR 40% OF STITCH RIVETS
   D) WHERE THE ABOVE PERCENTAGES ARE EXCEEDED THE NUMBER OF RIVETS OVER THE PRESCRIBED PERCENTAGE SHALL BE REPLACED WITH HIGH STRENGTH BOLTS.
   E) WHEN SELECTING RIVETS FOR REPLACEMENT TO MEET THE ABOVE PERCENTAGE REQUIREMENTS, THE WORST RIVETS IN ANY GROUP OR CONNECTION SHALL BE SELECTED FOR REPLACEMENT.

5. RIVETS (CONDITION D) NOT MEETING THE REQUIREMENTS OF CONDITION C AT EITHER HEAD SHALL BE REPLACED. (CONDITION D NOT SHOWN)

6. REPLACEMENT WILL ALSO BE REQUIRED FOR ANY RIVET EXHIBITING ADDITIONAL LOSS IN THE FORM OF PITS OR GOUGES OF THE EDGE OF EITHER HEAD PROJECTING BEYOND THE SHANK WHERE SUCH LOSS REDUCES THE SECTION BELOW THE LIMITS SHOWN FOR CONDITION B.

7. WHERE CREVICE OR INTERFACE CORROSION BETWEEN CONNECTED PARTS IS PRESENT THE RIVETS ADJACENT TO THAT AREA SHALL BE REPLACED AFTER CLEANING BETWEEN THE PARTS REGARDLESS OF THE CONDITION OF THE RIVETS.

8. RIVETS REPLACED IN ACCORDANCE WITH NOTES 2 THROUGH 7 WILL BE PAID FOR UNDER "BOLT AND RIVET REPLACEMENT".

9. DIMENSIONS SHOWN ON THESE SKETCHES FOR CONDITIONS B AND C ARE MINIMUM REQUIREMENTS FOR BOTH DRIVEN AND MANUFACTURED HEADS. THE MINIMUM HEIGHT OF HEAD IS MEASURED TO THE CENTER OF THE RIVET. THE MINIMUM DIAMETER APPLIES TO THAT DIRECTION IN WHICH IT IS THE SMALLEST.

10. THE SELECTION AND INSTALLATION OF BOLTS SHALL BE IN ACCORDANCE WITH THE SPECIFICATIONS. FOR EACH BOLT IN THESE ITEMS, A MINIMUM OF TWO WASHERS SHALL BE USED, ONE UNDER EACH HEAD AND NUT. THE CONTRACTOR SHALL TAKE ALL NECESSARY FIELD MEASUREMENTS TO DETERMINE PROPER GRIP LENGTHS.

REV.	DATE	REVISION DESCRIPTION	SHEET NO.
-	-	-	-
-	-	-	-
-	-	-	-
-	-	-	-
-	-	-	-
-	-	-	-

THE INFORMATION, INCLUDING ESTIMATED QUANTITIES OF WORK, SHOWN ON THESE SHEETS IS BASED ON LIMITED INVESTIGATIONS BY THE STATE AND IS IN NO WAY WARRANTED TO INDICATE THE CONDITIONS OF ACTUAL QUANTITIES OF WORK WHICH WILL BE REQUIRED.

Plotted Date: 1/2/2013

DESIGNER/DRAFTER: JCM
CHECKED BY: JCM

STATE OF CONNECTICUT
DEPARTMENT OF TRANSPORTATION

Filename: ...\SB_MSH_01710359_MISCELLANEOUS_REPAIR_DETAILS_2.dgn

SIGNATURE/BLOCK:
OFFICE OF ENGINEERING
APPROVED BY:

PROJECT TITLE:
BEAM END AND BEARING REPAIRS IN DISTRICT 1

TOWN: VARIOUS

DRAWING TITLE: DETERIORATED RIVET REPLACEMENT NOTES AND DETAILS

PROJECT NO. 171-359
DRAWING NO. S-7
SHEET NO. 03.07

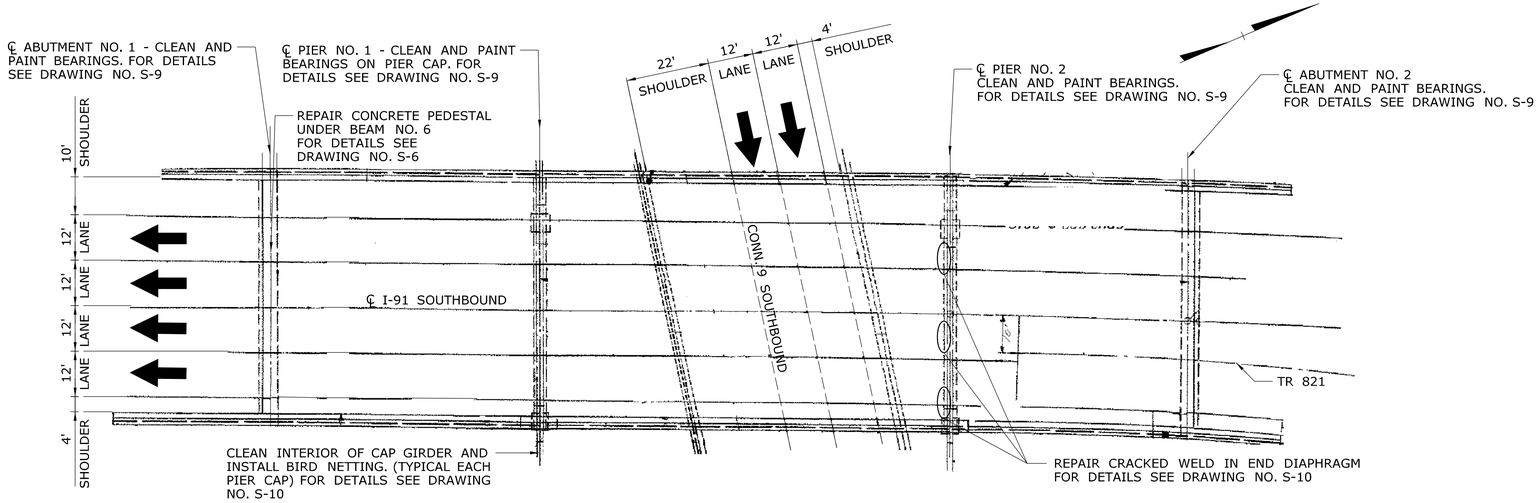

GENERAL PLAN - BRIDGE NO. 03148, I-91 SB AND TR 821 OVER RT. 9 SB & TR 818

SCALE: 1" = 20'

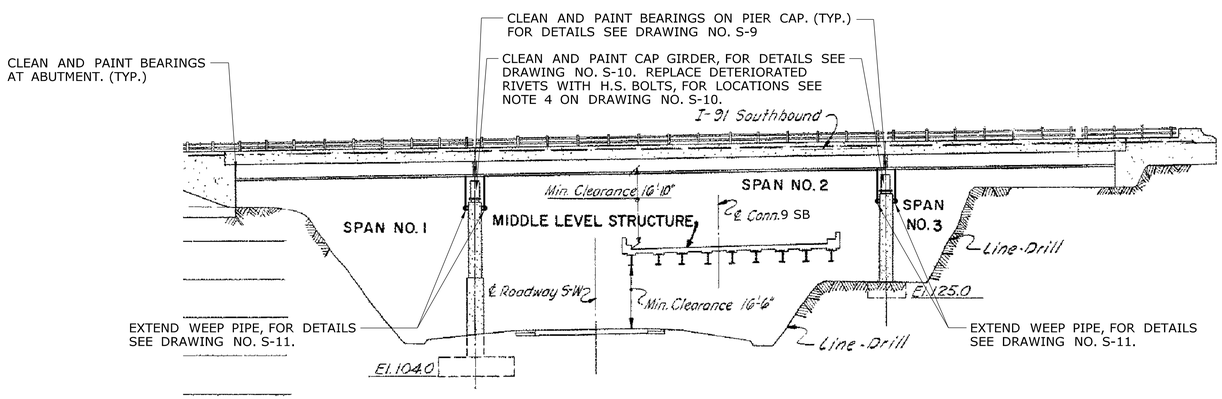

ELEVATION

SCALE: 1" = 20'

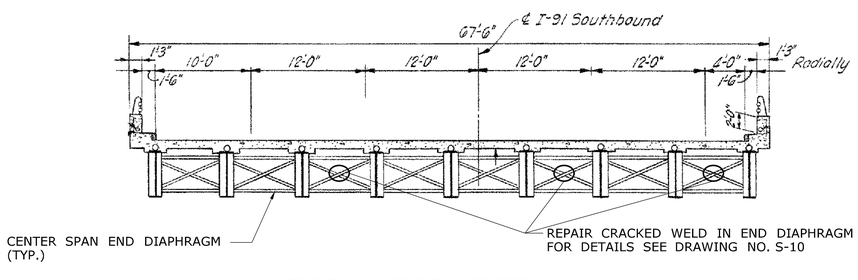

TYPICAL CROSS SECTION

SCALE: 1/8" = 1'-0"

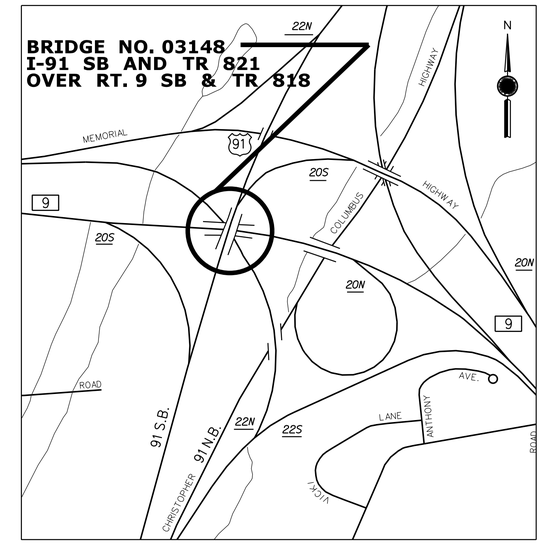

LOCATION PLAN

SCALE
0 1000 FT

REV.	DATE	REVISION DESCRIPTION	SHEET NO.
-	-	-	-
-	-	-	-
-	-	-	-
-	-	-	-
-	-	-	-
-	-	-	-

THE INFORMATION, INCLUDING ESTIMATED QUANTITIES OF WORK, SHOWN ON THESE SHEETS IS BASED ON LIMITED INVESTIGATIONS BY THE STATE AND IS IN NO WAY WARRANTED TO INDICATE THE CONDITIONS OF ACTUAL QUANTITIES OF WORK WHICH WILL BE REQUIRED.

Plotted Date: 1/2/2013

DESIGNER/DRAFTER: BU
CHECKED BY: JCM
SCALE AS NOTED

STATE OF CONNECTICUT
DEPARTMENT OF TRANSPORTATION

Filename: ...\SB_MSH_BR03148_S8_GENERAL_PLAN.dgn

SIGNATURE/ BLOCK:
OFFICE OF ENGINEERING
APPROVED BY:

PROJECT TITLE:
BEAM END AND BEARING REPAIRS IN DISTRICT 1

TOWN: CROMWELL
DRAWING TITLE: BRIDGE NO. 03148 GENERAL PLAN

PROJECT NO. 171-359
DRAWING NO. S-8
SHEET NO. 03.08

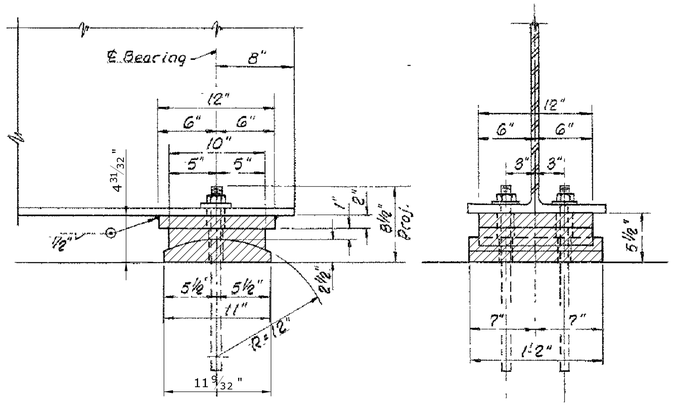

EXPANSION BEARINGS AT ABUTMENT NOS. 1 AND 2

SCALE: 1½" = 1'-0"

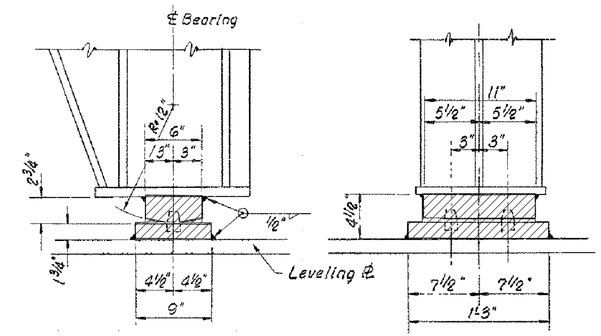

FIXED BEARINGS AT PIER NOS. 1 & 2

SCALE: 1½" = 1'-0"

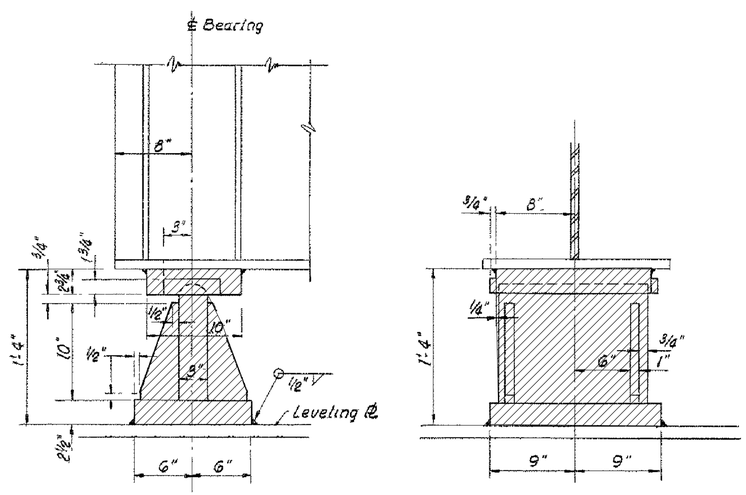

FIXED BEARINGS AT PIER NO.1 - CENTER SPAN

SCALE: 1½" = 1'-0"

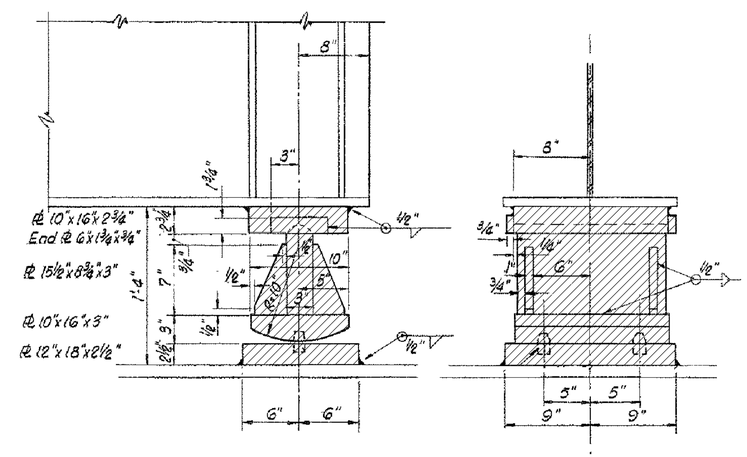

EXPANSION BEARINGS AT PIER NO.2 - CENTER SPAN

SCALE: 1½" = 1'-0"

DENOTES LIMITS OF CLEANING AND PAINTING OF BEARINGS. THIS WORK TO BE INCLUDED FOR PAYMENT UNDER THE ITEM "LOCALIZED PAINT REMOVAL AND FIELD PAINTING OF EXISTING STEEL (SITE NO. 1)".

NOTE: DETAILS ON THIS SHEET ARE FOR INFORMATION ONLY.

FOR NOTES SEE "PAINTING NOTES" ON DRAWING NO. S-2.

REV.	DATE	REVISION DESCRIPTION	SHEET NO.
-	-	-	-
-	-	-	-
-	-	-	-
-	-	-	-
-	-	-	-
-	-	-	-

THE INFORMATION, INCLUDING ESTIMATED QUANTITIES OF WORK, SHOWN ON THESE SHEETS IS BASED ON LIMITED INVESTIGATIONS BY THE STATE AND IS IN NO WAY WARRANTED TO INDICATE THE CONDITIONS OF ACTUAL QUANTITIES OF WORK WHICH WILL BE REQUIRED.

Plotted Date: 1/2/2013

DESIGNER/DRAFTER: BU

CHECKED BY: JCM

SCALE AS NOTED

STATE OF CONNECTICUT
DEPARTMENT OF TRANSPORTATION

Filename: ...\SB_MSH_BR03148_S9_CLEAN_AND_PAINT_BEARING_DETAILS.dgn

SIGNATURE/ BLOCK:

OFFICE OF ENGINEERING

APPROVED BY:

PROJECT TITLE:

BEAM END AND BEARING REPAIRS IN DISTRICT 1

TOWN: **CROMWELL**

DRAWING TITLE: **CLEAN AND PAINT BEARING DETAILS**

PROJECT NO. **171-359**

DRAWING NO. **S-9**

SHEET NO. 03.09

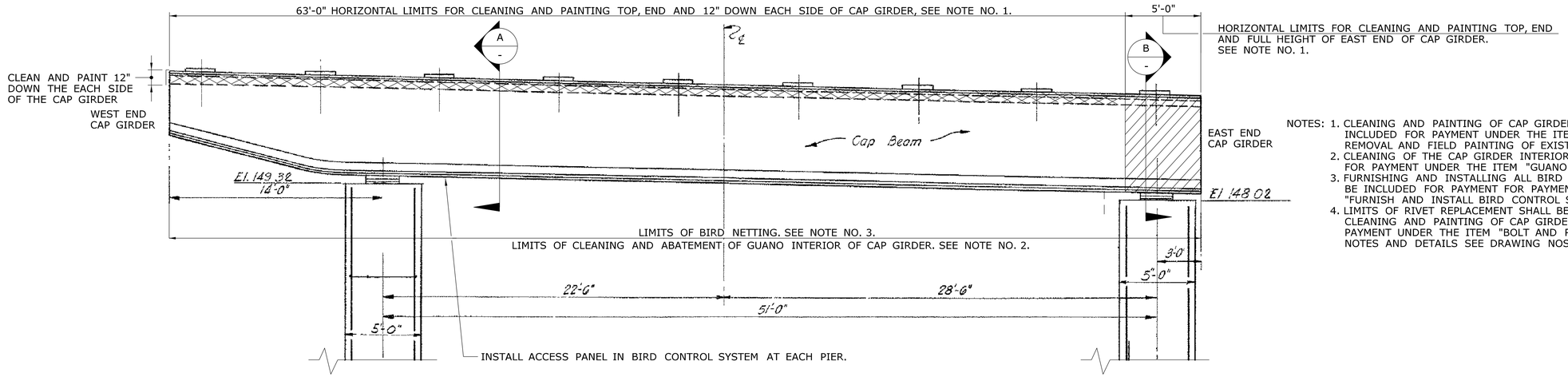

NOTES:
1. CLEANING AND PAINTING OF CAP GIRDERS AND BEARINGS TO BE INCLUDED FOR PAYMENT UNDER THE ITEM "LOCALIZED PAINT REMOVAL AND FIELD PAINTING OF EXISTING STEEL (SITE NO. 1)".
2. CLEANING OF THE CAP GIRDER INTERIOR SURFACES TO BE INCLUDED FOR PAYMENT UNDER THE ITEM "GUANO ABATEMENT".
3. FURNISHING AND INSTALLING ALL BIRD NETTING COMPONENTS TO BE INCLUDED FOR PAYMENT FOR PAYMENT UNDER THE ITEM "FURNISH AND INSTALL BIRD CONTROL SYSTEM".
4. LIMITS OF RIVET REPLACEMENT SHALL BE THE LIMITS SHOWN FOR CLEANING AND PAINTING OF CAP GIRDERS AND INCLUDED FOR PAYMENT UNDER THE ITEM "BOLT AND RIVET REPLACEMENT". FOR NOTES AND DETAILS SEE DRAWING NOS. S-2 AND S-7.

ELEVATION PIER NO. 1 (PIER 2 SIMILAR)

SCALE: 1/4"= 1'-0"

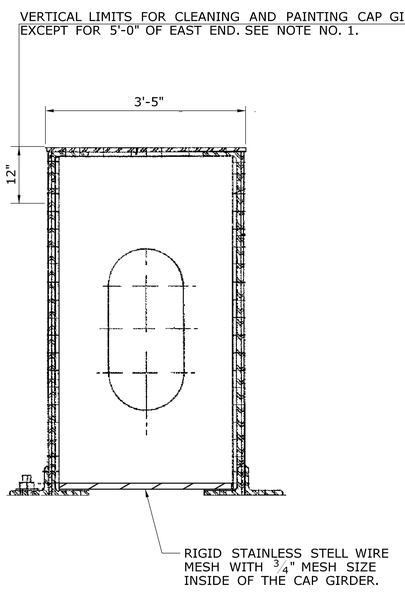

SECTION A
SCALE: 3/4"=1'-0"

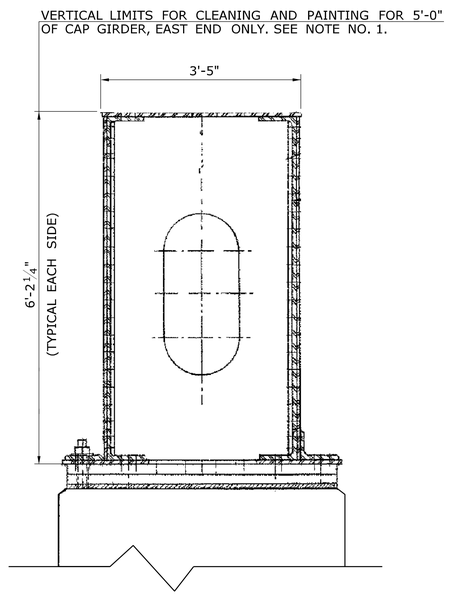

SECTION B
SCALE: 3/4"=1'-0"

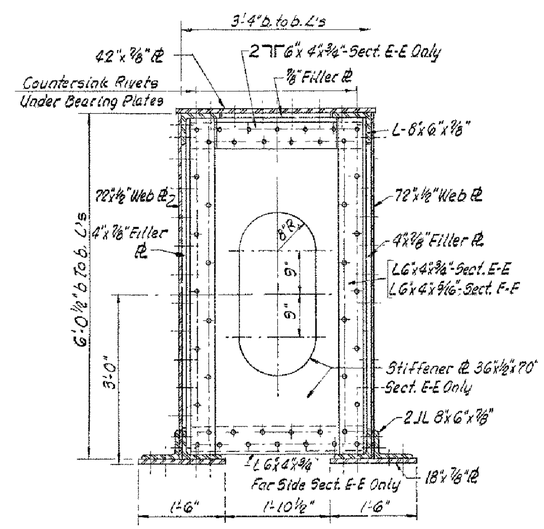

SECTION OF CAP GIRDER
SCALE 3/4" = 1'-0"

NOTE: THIS DETAIL PROVIDED FOR RIVET REPLACEMENT INFORMATION ONLY. FOR RIVET REPLACEMENT NOTES AND DETAILS SEE DRAWING NOS. S-2 AND S-7.

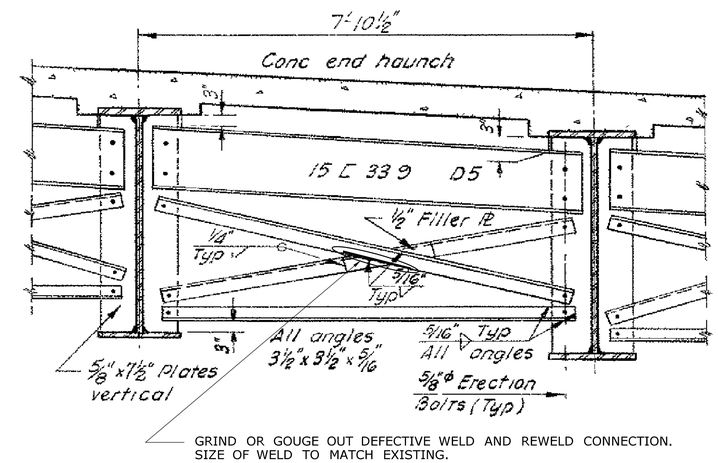

TYPICAL END DIAPHRAGM IN SPAN 2 AT PIER NO. 2 BAY NOS. 3 6 AND 8.

WELD REPAIR DETAIL

SCALE: 3/4" = 1'-0"

NOTES:
REPAIR THE BOTTOM HORIZONTAL LEG OF THE DIAPHRAGM TO CONNECTION PLATE WELD. REMOVAL AND REWELDING TO BE INCLUDED FOR PAYMENT FOR UNDER THE ITEM "REPAIR DEFECTIVE WELDS". THE PAINT REMOVAL AND REPAINTING OF EXISTING STEEL TO BE PAID FOR UNDER THE ITEM "LOCALIZED PAINT REMOVAL AND FIELD PAINTING OF EXISTING STEEL".

PRIOR TO APPLYING THE HEAT OF WELDING/CUTTING EQUIPTMENT TO LOCALIZED AREAS OF EXISTING STEEL, THE EXISTING PAINT SHALL BE REMOVED ON EACH FACE OF STEEL TO A WIDTH OF 6 INCHES FROM WHEREVER THE HEAT WILL BE APPLIED, OR AS DIRECTED BY THE ENGINEER.

THE FOLLOWING MATERIAL DESIGNATIONS ARE FOR INFORMATION ONLY AND ARE FROM 1962 CONTRACT DRAWINGS.
ALL STRUCTURAL STEEL MEMBERS OTHER THAN NOTED BELOW = ASTM A36-62T.
SOLE PLATE AND MASONRY PLATE = ASTM A-242(MODIFIED).

FOR WELDING NOTES SEE "REHABILITATION OF EXISTING STRUCTURAL STEEL NOTES" ON DRAWING NO. S-2.

FOR NOTES SEE "PAINTING NOTES" ON DRAWING NO. S-2.

REV.	DATE	REVISION DESCRIPTION	SHEET NO.
-	-	-	-
-	-	-	-
-	-	-	-
-	-	-	-
-	-	-	-
-	-	-	-

THE INFORMATION, INCLUDING ESTIMATED QUANTITIES OF WORK, SHOWN ON THESE SHEETS IS BASED ON LIMITED INVESTIGATIONS BY THE STATE AND IS IN NO WAY WARRANTED TO INDICATE THE CONDITIONS OF ACTUAL QUANTITIES OF WORK WHICH WILL BE REQUIRED.

Plotted Date: 1/2/2013

DESIGNER/DRAFTER: BU
CHECKED BY: JCM
SCALE AS NOTED

STATE OF CONNECTICUT
DEPARTMENT OF TRANSPORTATION

Filename: ...\SB_MSH_BR03148_S10_CAP_GIRDER_REPAIR_DETAILS.dgn

SIGNATURE/BLOCK: OFFICE OF ENGINEERING
APPROVED BY:

PROJECT TITLE: BEAM END AND BEARING REPAIRS DISTRICT 1

TOWN: CROMWELL
DRAWING TITLE: BRIDGE NO. 3148 CAP GIRDER REPAIR DETAILS

PROJECT NO. 171-359
DRAWING NO. S-10
SHEET NO. 03.10

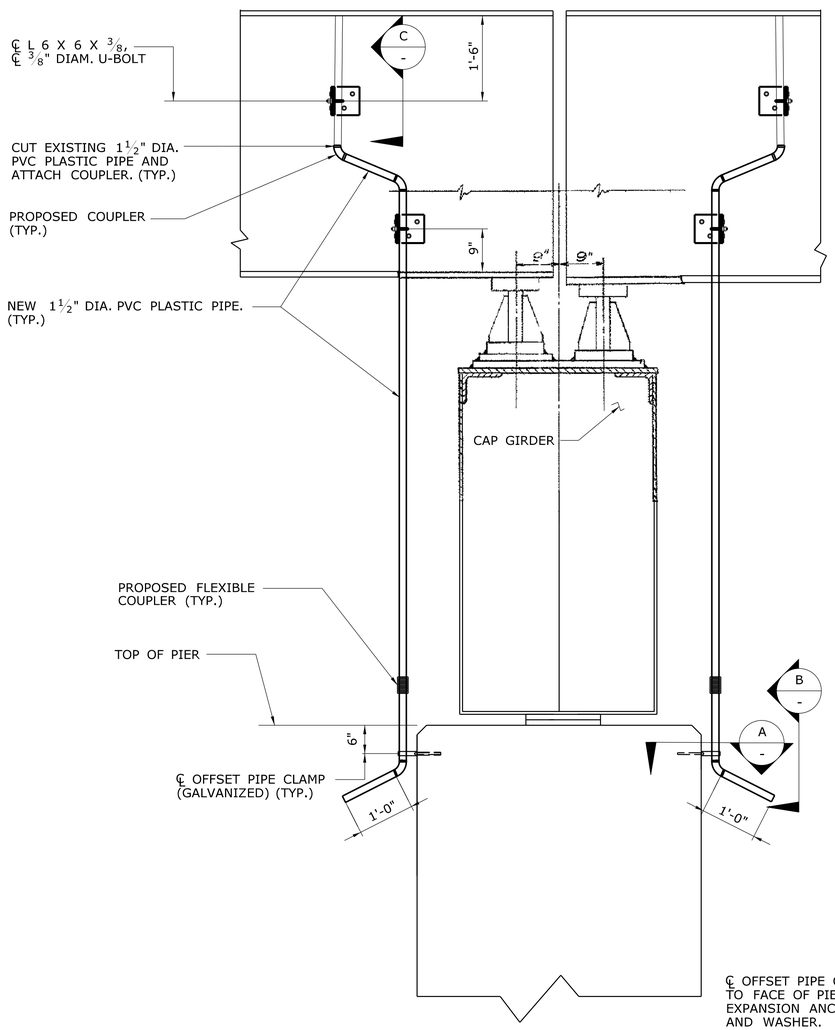

VIEW OF EAST END PIER

SCALE: 3/4"=1'-0"

FOR NOTES SEE "WEEP PIPE NOTES" ON DRAWING NO. S-2.

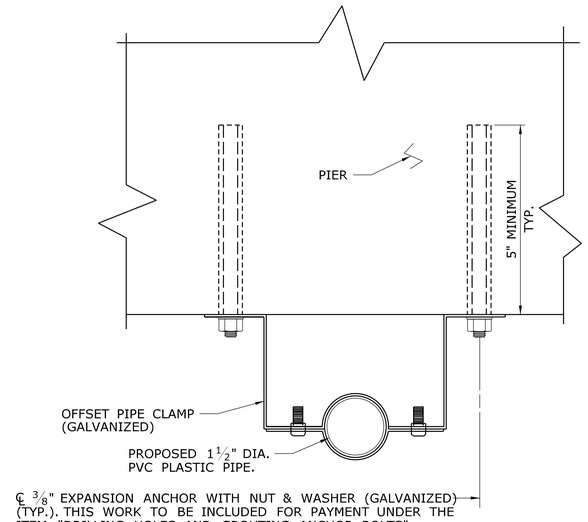

SECTION A

SCALE: 6"=1'-0"

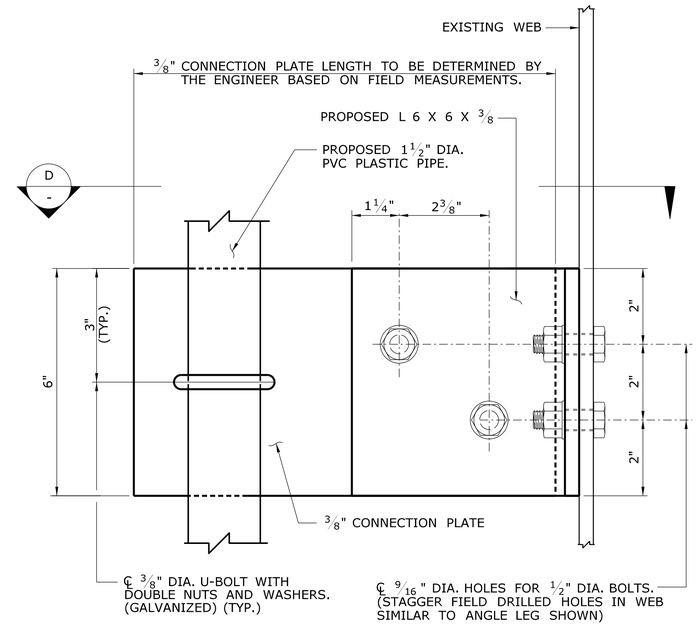

SECTION C

SCALE: 6"=1'-0"

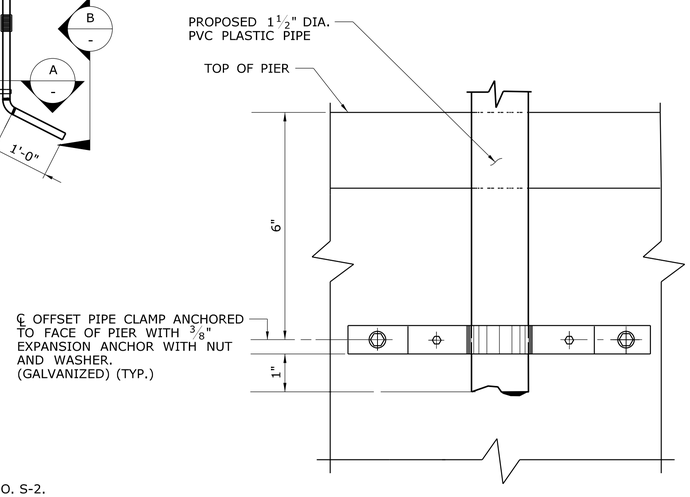

SECTION B

SCALE: 6"=1'-0"

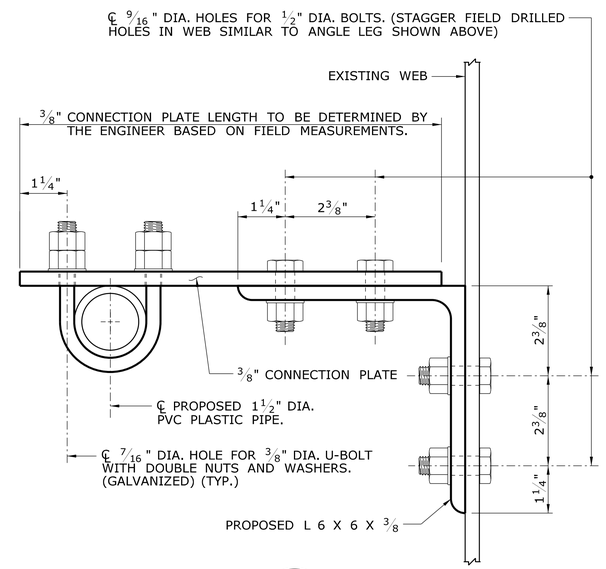

SECTION D

SCALE: 6"=1'-0"

REV.	DATE	REVISION DESCRIPTION	SHEET NO.
-	-	-	-
-	-	-	-
-	-	-	-
-	-	-	-
-	-	-	-
-	-	-	-

THE INFORMATION, INCLUDING ESTIMATED QUANTITIES OF WORK, SHOWN ON THESE SHEETS IS BASED ON LIMITED INVESTIGATIONS BY THE STATE AND IS IN NO WAY WARRANTED TO INDICATE THE CONDITIONS OF ACTUAL QUANTITIES OF WORK WHICH WILL BE REQUIRED.

Plotted Date: 1/2/2013

DESIGNER/DRAFTER: BU

CHECKED BY: JCM

SCALE AS NOTED

STATE OF CONNECTICUT
DEPARTMENT OF TRANSPORTATION

Filename: ...\SB_MSH_BR03148_S11_WEEP PIPE DETAILS_2.dgn

SIGNATURE/ BLOCK:

OFFICE OF ENGINEERING

APPROVED BY:

PROJECT TITLE:

BEAM END AND BEARING REPAIRS IN DISTRICT 1

TOWN: **CROMWELL**

DRAWING TITLE: **BRIDGE NO. 03148 WEEP PIPE DETAILS**

PROJECT NO. **171-359**

DRAWING NO. **S-11**

SHEET NO. 03.11

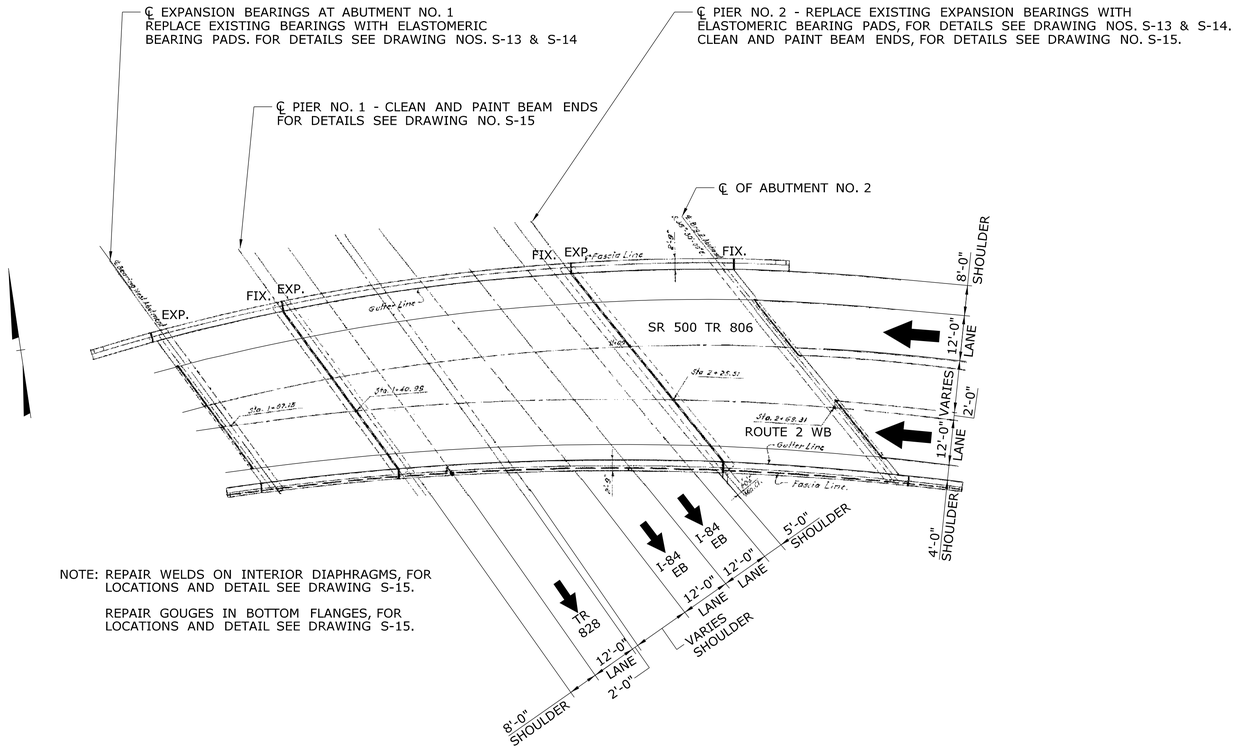

NOTE: REPAIR WELDS ON INTERIOR DIAPHRAGMS, FOR LOCATIONS AND DETAIL SEE DRAWING S-15.

REPAIR GOUGES IN BOTTOM FLANGES, FOR LOCATIONS AND DETAIL SEE DRAWING S-15.

GENERAL PLAN-BRIDGE NO. 02366 ROUTE 2 WB & SR 500 TR 806 OVER I-84 EB & TR 828

SCALE: 1" = 20'

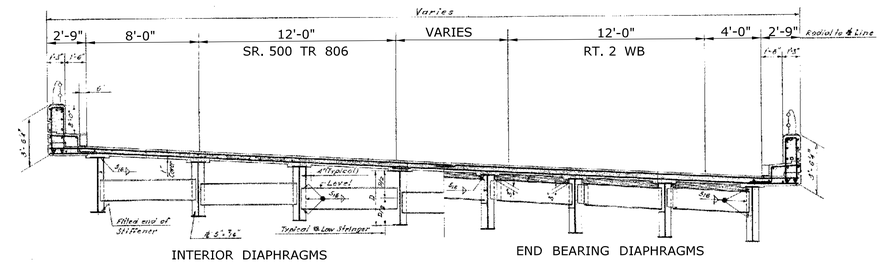

TYPICAL BRIDGE CROSS SECTION (CENTER SPAN)

SCALE: 3/8" = 1'

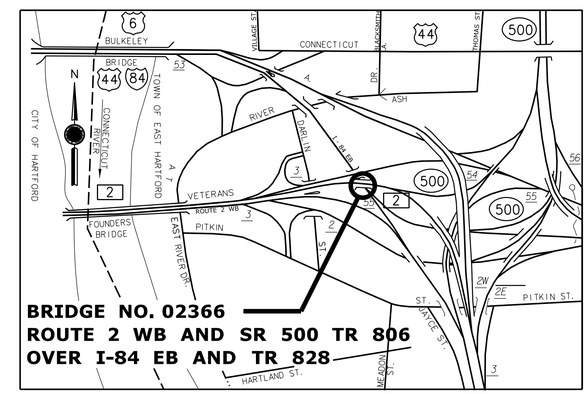

LOCATION PLAN

SCALE
0 2000 FT

℄ EXPANSION BEARINGS AT ABUTMENT NO. 1 REPLACE EXISTING BEARINGS WITH ELASTOMERIC BEARING PADS. FOR DETAILS SEE DRAWING NOS. S-13 & S-14

CLEAN AND PAINT BEAM ENDS AT PIER NOS. 1 AND 2. FOR DETAILS SEE DRAWING NO. S-15

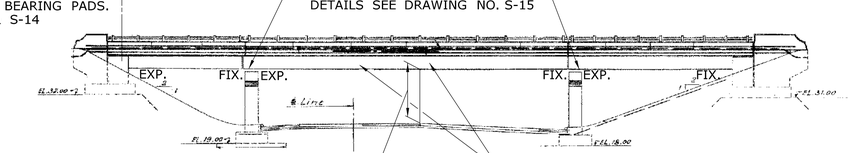

14'-3 1/4" MINIMUM VERTICAL CLEARANCE

GRIND OUT GOUGES IN GIRDER NOS. S14 AND S15, FOR LOCATIONS AND DETAIL SEE DRAWING S-15.
REPAIR BROKEN WELDS ON INTERIOR DIAPHRAGMS, FOR LOCATIONS AND DETAILS SEE DRAWING NO. S-15.

ELEVATION

SCALE: 1" = 20'

REV.	DATE	REVISION DESCRIPTION	SHEET NO.
-	-	-	-
-	-	-	-
-	-	-	-
-	-	-	-
-	-	-	-
-	-	-	-

THE INFORMATION, INCLUDING ESTIMATED QUANTITIES OF WORK, SHOWN ON THESE SHEETS IS BASED ON LIMITED INVESTIGATIONS BY THE STATE AND IS IN NO WAY WARRANTED TO INDICATE THE CONDITIONS OF ACTUAL QUANTITIES OF WORK WHICH WILL BE REQUIRED.

Plotted Date: 1/2/2013

DESIGNER/DRAFTER: BU
CHECKED BY: JCM
SCALE AS NOTED

STATE OF CONNECTICUT
DEPARTMENT OF TRANSPORTATION

Filename: ...\SB_MSH_BR02366_S12_GENERAL_PLAN.dgn

SIGNATURE/BLOCK:
OFFICE OF ENGINEERING
APPROVED BY:

PROJECT TITLE:
BEAM END AND BEARING REPAIRS IN DISTRICT 1

TOWN: EAST HARTFORD
DRAWING TITLE: BRIDGE NO. 02366 GENERAL PLAN

PROJECT NO. 171-359
DRAWING NO. S-12
SHEET NO. 03.12

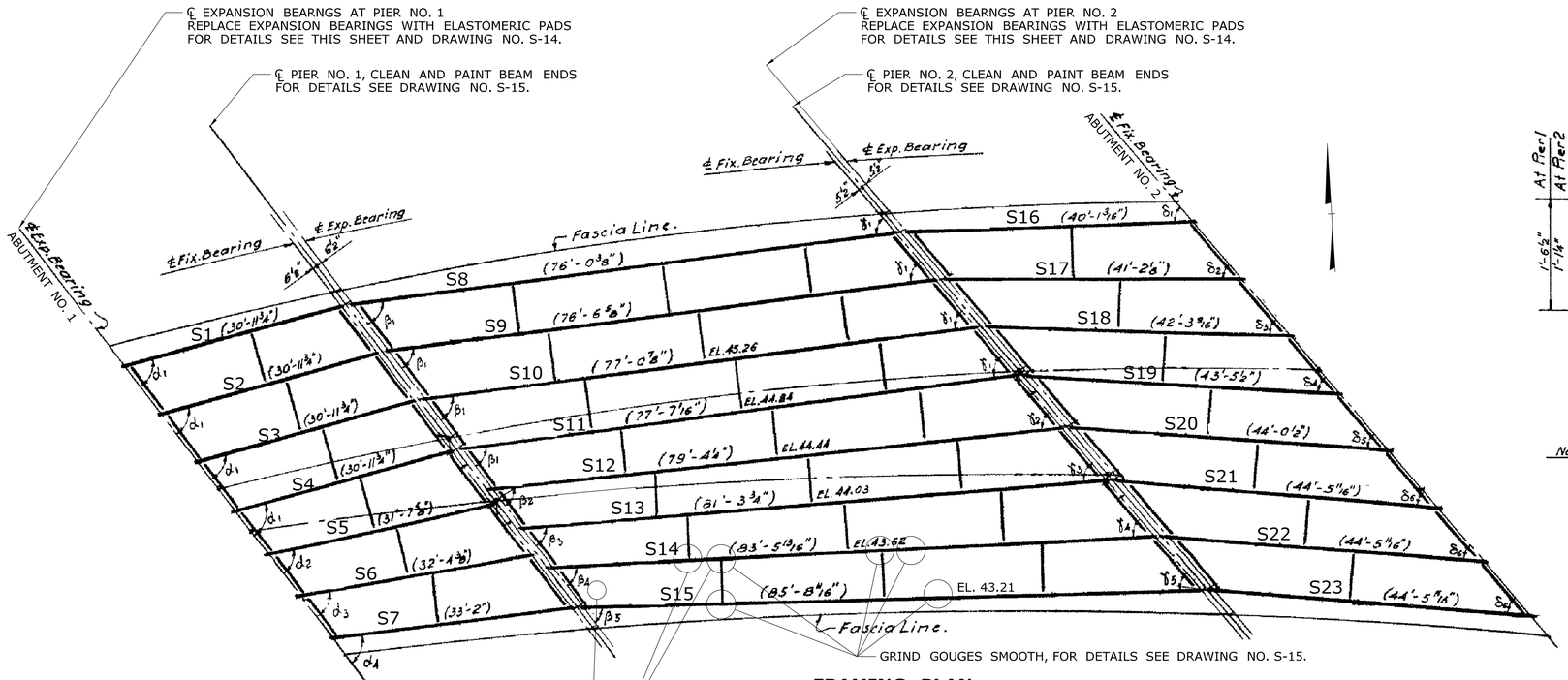

FRAMING PLAN

SCALE: 1"=10'-0"

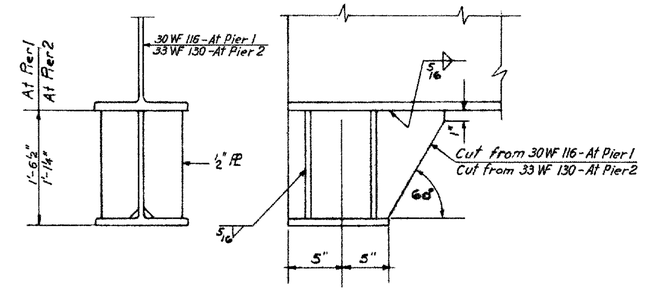

STOOL DETAIL

Scale: 1½" = 1'-0"

Note: Bearings for interior stringers for side spans shown above to be welded to stools of Piers.

BEAM SKEW AT ABUTMENT NO. 1

$\alpha_1 = 68°-00'-00"$
$\alpha_2 = 65°-13'-08.84"$
$\alpha_3 = 62°-33'-20.88"$
$\alpha_4 = 60°-00'-00"$

BEAM MARK	MEMBER SIZE
S1 & S7	Web PL 45" x ¾" Top PL -12" x ¾" - F.L. Bottom PL "A" - 12" x ¾" - F.L.
S2 - S6	30 WF 116
S8	Web PL 45" x ¾" Top PL - 12" x ¾" - F.L. Bot. PL "A" - 12" x 1⅝" - 55'-0" Bot. PL "B" - 12" x ¾" - Balance.
S9 - S11	Web PL 45" x ¾" Top PL - 12" x ¾" - F.L. Bot. PL "A" - 12" x 1¾" - 57'-0" Bot. PL "B" - 12" x ¾" - Balance.
S12 & S13	Web PL 45" x ¾" Top PL - 12" x ¾" - F.L. Bot. PL "A" - 12" x 1⅞" - 61'-0" Bot. PL "B" - 12" x ¾" - Balance.
S14	Web PL 45" x ¾" Top PL - 12" x ¾" - F.L. Bot. PL "A" - 12" x 2" - 63'-6" Bot. PL "B" - 12" x ¾" - Balance.
S15	Web PL 45" x ¾" Top PL - 12" x 1" - F.L. Bot. PL "A" - 12" x 2" - 61'-0" Bot. PL "B" - 12" x 1" - Balance.
S16 & S23	Web PL 45" x ¾" Top PL 12" x ¾" - F.L. Bot. PL "A" 12" x ¾" - F.L.
S17 - S22	33 WF 130

BEAM SKEW AT PIER NO. 2 FOR SPAN NO. 3

$\delta_1 = 51°-38'-53.91"$
$\delta_2 = 49°-47'-18.14"$
$\delta_3 = 48°-01'-30.07"$
$\delta_4 = 46°-21'-16.09"$
$\delta_5 = 45°-33'-43.08"$
$\delta_6 = 45°-00'-00"$

EXISTING STRUCTURAL STEEL MATERIAL DESIGNATIONS:

NON-PLATED ROLLED BEAMS: ASTM A 7
BUILT-UP WELDED SECTIONS AND SOLE PLATES: ASTM A 373
MASONRY PLATES: ASTM A 242
ALL OTHER STEEL: ASTM A 7

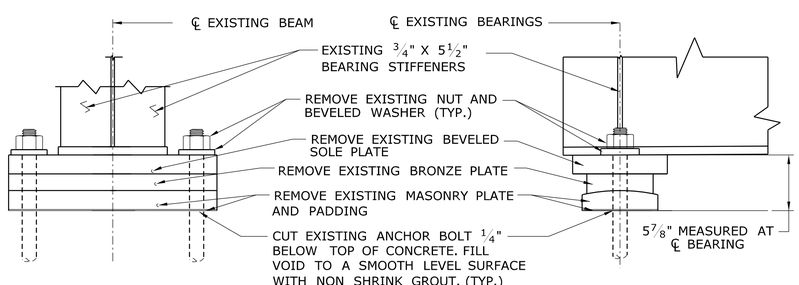

END ELEVATION — SIDE ELEVATION

NOTES:
WORK INVOLVING JACKING THE EXISTING SUPERSTRUCTURE TO BE PAID FOR UNDER THE ITEM "JACKING FOR BEARING REPLACEMENT". WORK INVOLVING THE REMOVAL OF THE EXISTING BEARING TO BE PAID FOR UNDER THE ITEM "BEARING REPLACEMENT WITH ELASTOMERIC BEARING PADS".

EXISTING EXPANSION BEARING DETAILS FOR BEAMS S1 & S7 AND S16 & S23

SCALE: 1½"=1'-0"

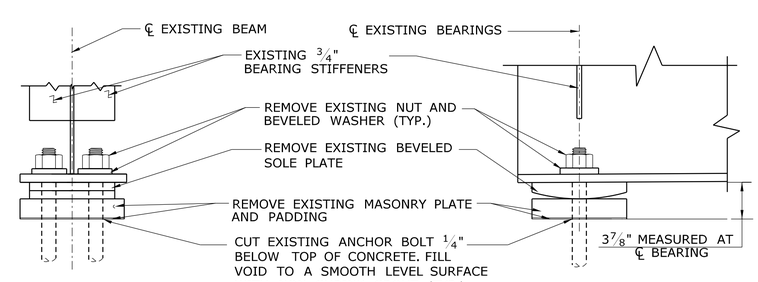

END ELEVATION — SIDE ELEVATION

NOTES:
WORK INVOLVING JACKING THE EXISTING SUPERSTRUCTURE TO BE PAID FOR UNDER THE ITEM "JACKING FOR BEARING REPLACEMENT". WORK INVOLVING THE REMOVAL OF THE EXISTING BEARING TO BE PAID FOR UNDER THE ITEM "BEARING REPLACEMENT WITH ELASTOMERIC BEARING PADS".

EXISTING EXPANSION BEARING DETAILS FOR BEAMS S2 - S6 AND S17 - S23

SCALE: 1½"=1'-0"

FOR NOTES SEE "ELASTOMERIC BEARING NOTES" ON DRAWING NO. S-2.

REV.	DATE	REVISION DESCRIPTION	SHEET NO.
-	-	-	-
-	-	-	-
-	-	-	-
-	-	-	-
-	-	-	-
-	-	-	-

THE INFORMATION, INCLUDING ESTIMATED QUANTITIES OF WORK, SHOWN ON THESE SHEETS IS BASED ON LIMITED INVESTIGATIONS BY THE STATE AND IS IN NO WAY WARRANTED TO INDICATE THE CONDITIONS OF ACTUAL QUANTITIES OF WORK WHICH WILL BE REQUIRED.

Plotted Date: 1/2/2013

DESIGNER/DRAFTER: BW
CHECKED BY: JCM
SCALE AS NOTED

STATE OF CONNECTICUT
DEPARTMENT OF TRANSPORTATION

Filename: ...\SB_MSH_BR02366_S13_FRAMING_PLAN.dgn

SIGNATURE/BLOCK: OFFICE OF ENGINEERING
APPROVED BY:

PROJECT TITLE: BEAM END AND BEARING REPAIRS IN DISTRICT 1

TOWN: EAST HARTFORD
DRAWING TITLE: BRIDGE NO. 02366 FRAMING PLAN

PROJECT NO. 171-359
DRAWING NO. S-13
SHEET NO. 03.13

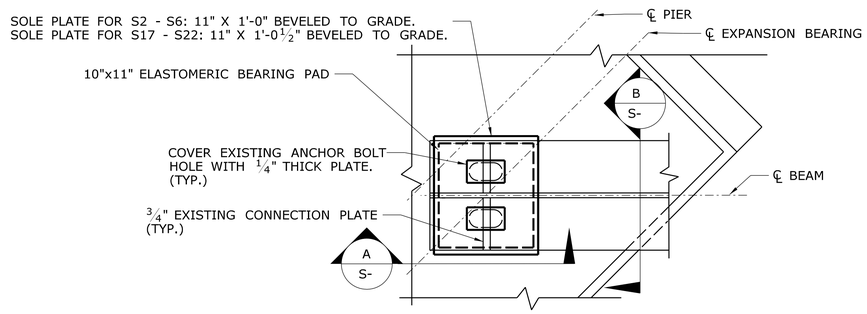

PLAN

SCALE: 1½"=1'-0"

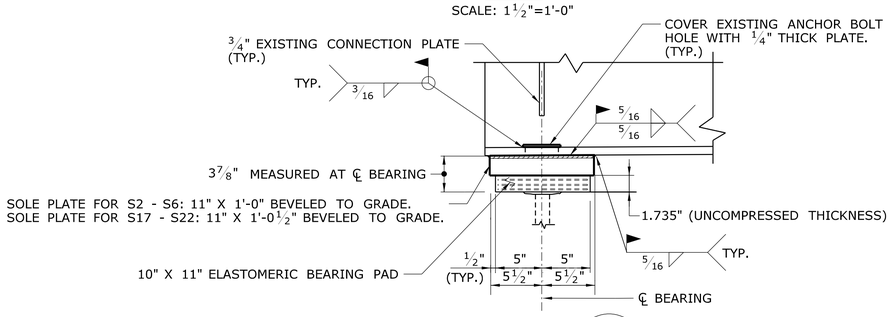

SECTION A

SCALE: 1½"=1'-0"

BEAM REACTIONS (KIPS)			
MARK NO.	D.L.	S.D.L.	LL + I
S1 & S7 S16 & S23	37	12	82
S2 - S6 S17 - S22			

BEAM REACTION NOTES:

1. THE GIRDER REACTIONS HAVE BEEN PROVIDED FOR INFORMATION ONLY AND MAY BE USED TO DEVELOP DETAILS FOR JACKING THE SUPERSTRUCTURE.
2. THE DEAD LOAD REACTIONS ARE DUE TO THE STRUCTURAL STEEL AND CONCRETE SLAB.
3. THE SUPERIMPOSED DEAD LOAD REACTIONS ARE DUE TO THE PARAPETS AND BITUMINOUS CONCRETE OVERLAY.

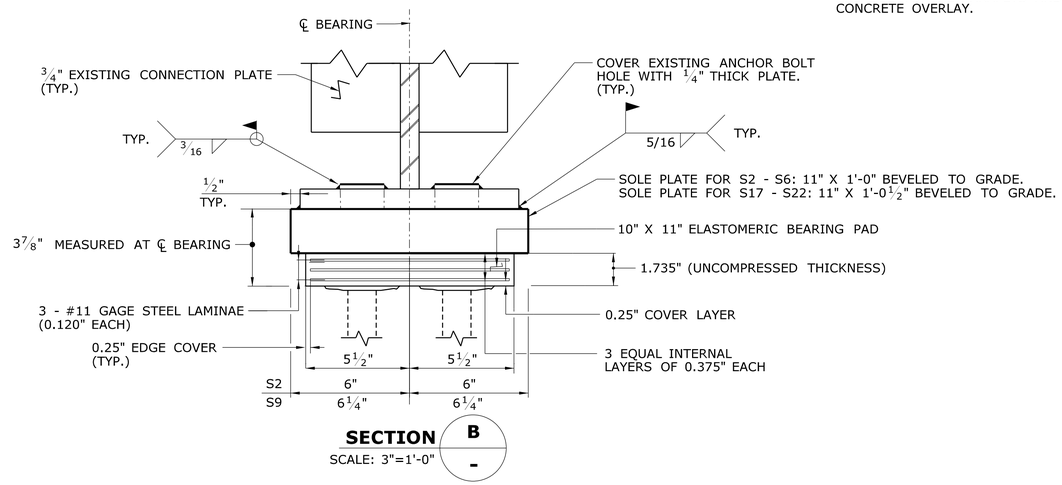

SECTION B

SCALE: 3"=1'-0"

PROPOSED EXPANSION BEARING DETAILS FOR BEAMS S2 - S6 AND S17 - S22

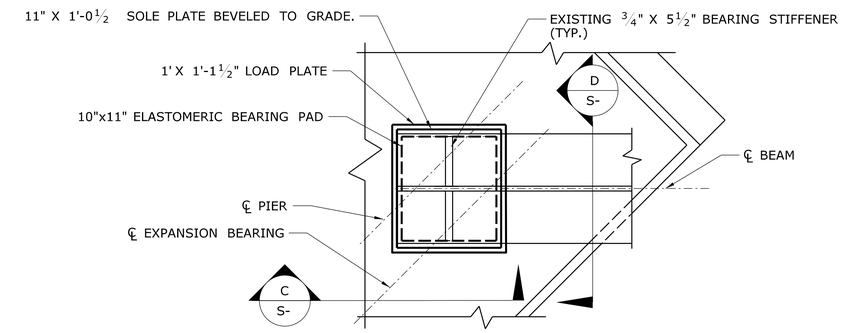

PLAN

SCALE: 1½"=1'-0"

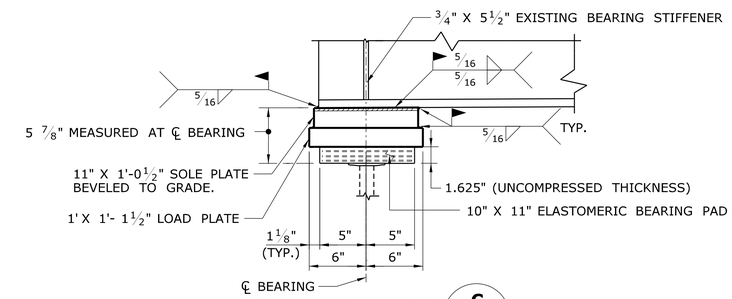

SECTION C

SCALE: 1½"=1'-0"

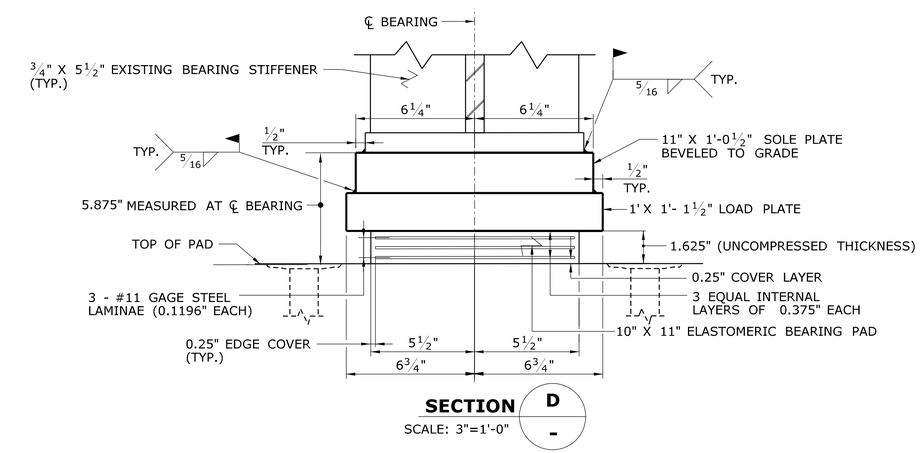

SECTION D

SCALE: 3"=1'-0"

PROPOSED EXPANSION BEARING DETAILS FOR BEAMS S1 & S7 AND S16 & S23

NOTES:
WORK INVOLVING JACKING THE EXISTING SUPERSTRUCTURE TO BE PAID FOR UNDER THE ITEM "JACKING FOR BEARING REPLACEMENT".
WORK INVOLVING THE REMOVAL OF THE EXISTING BEARING TO BE PAID FOR UNDER THE ITEM "BEARING REPLACEMENT WITH ELASTOMERIC BEARING PADS".
FOR ADDITIONAL NOTES SEE "EXPANSION BEARING NOTES" ON DRAWING NO. S-2.

REV.	DATE	REVISION DESCRIPTION	SHEET NO.
-	-	-	-
-	-	-	-
-	-	-	-
-	-	-	-
-	-	-	-
-	-	-	-

THE INFORMATION, INCLUDING ESTIMATED QUANTITIES OF WORK, SHOWN ON THESE SHEETS IS BASED ON LIMITED INVESTIGATIONS BY THE STATE AND IS IN NO WAY WARRANTED TO INDICATE THE CONDITIONS OF ACTUAL QUANTITIES OF WORK WHICH WILL BE REQUIRED.

Plotted Date: 1/2/2013

DESIGNER/DRAFTER: BU
CHECKED BY: JCM
SCALE AS NOTED

STATE OF CONNECTICUT
DEPARTMENT OF TRANSPORTATION

Filename: ...\SB_MSH_BR02366_S14_PROPOSED_BEARING_DETAILS.dgn

SIGNATURE/BLOCK: OFFICE OF ENGINEERING
APPROVED BY:

PROJECT TITLE:
BEAM END AND BEARING REPAIRS IN DISTRICT 1

TOWN: EAST HARTFORD
DRAWING TITLE: BRIDGE NO. 02366 PROPOSED BEARING DETAILS

PROJECT NO. 171-359
DRAWING NO. S-14
SHEET NO. 03.14

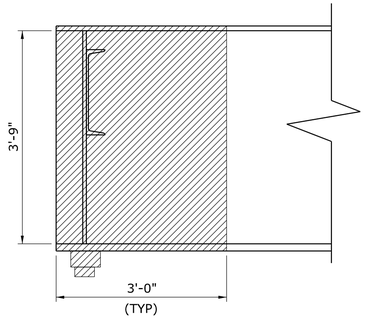

SPAN 2 SHOWN
SPAN 1 & 3 SIMILAR

SCALE: 3/4" = 1'-0"

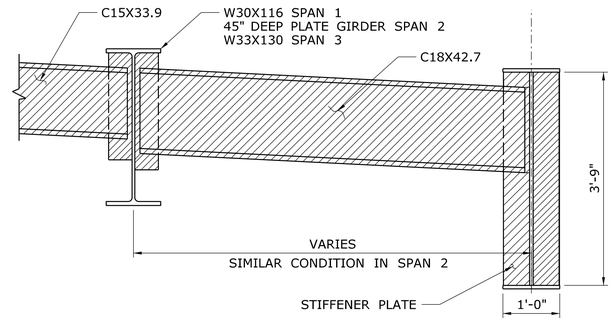

END DIAPHRAGM AND STIFFENER PAINTING LIMIT

SCALE: 3/4" = 1'-0"

LIMITS OF CLEANING AND PAINTING BEAM ENDS

DENOTES LIMITS OF CLEANING AND PAINTING OF BEAM ENDS AND BEARINGS. THIS WORK TO BE INCLUDED FOR PAYMENT UNDER THE ITEM "LOCALIZED PAINT REMOVAL AND FIELD PAINTING OF EXISTING STEEL (SITE NO. 2)".

FOR NOTES SEE "PAINTING NOTES" ON DRAWING NO. S-2.

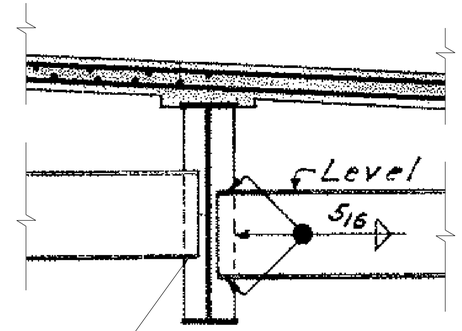

GRIND OR GOUGE OUT DEFECTIVE WELD AND REWELD CONNECTION. SIZE OF WELD TO MATCH EXISTING. SEE NOTES THIS SHEET.

WELD REPAIR DETAIL

SCALE: 3/4" = 1'-0"

NOTES:
REPAIR THE BOTTOM HORIZONTAL LEG OF THE DIAPHRAGM TO CONNECTION PLATE WELD. REMOVAL AND REWELDING TO BE INCLUDED FOR PAYMENT FOR UNDER THE ITEM "REPAIR DEFECTIVE WELDS". THE PAINT REMOVAL AND REPAINTING OF EXISTING STEEL TO BE PAID FOR UNDER THE ITEM "LOCALIZED PAINT REMOVAL AND FIELD PAINTING OF EXISTING STEEL".

PRIOR TO APPLYING THE HEAT OF WELDING/CUTTING EQUIPTMENT TO LOCALIZED AREAS OF EXISTING STEEL, THE EXISTING PAINT SHALL BE REMOVED ON EACH FACE OF STEEL TO A WIDTH OF 6 INCHES FROM WHEREVER THE HEAT WILL BE APPLIED, OR AS DIRECTED BY THE ENGINEER.

FOR WELDING NOTES SEE "REHABILITATION OF EXISTING STRUCTURAL STEEL NOTES" ON DRAWING NO. S-2.

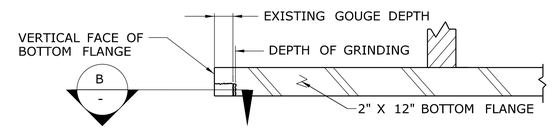

CROSS SECTION OF GIRDER

SCALE: 6" = 1'-0"

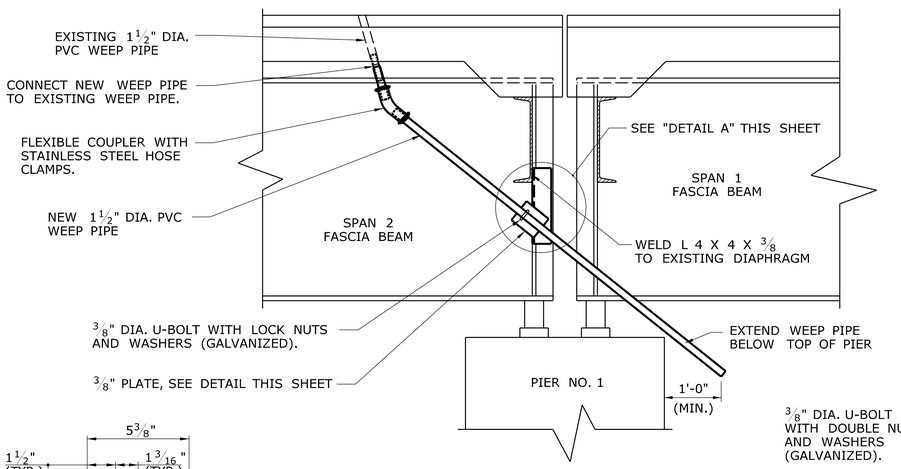

WEEPHOLE EXTENSION DETAIL

SCALE: 3/4" = 1'-0"

FOR NOTES SEE "WEEP PIPE NOTES" ON DRAWING NO. S-2.

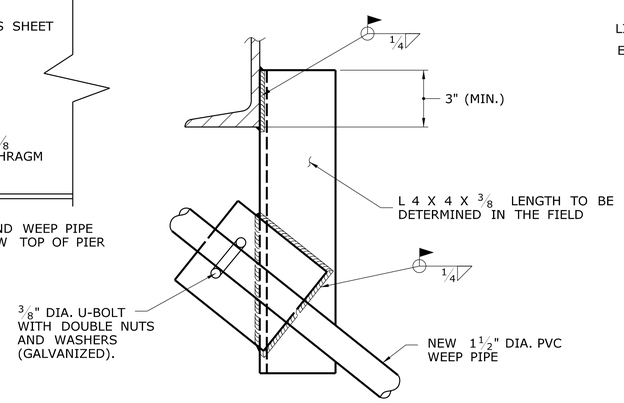

DETAIL A

SCALE: 3" = 1'-0"

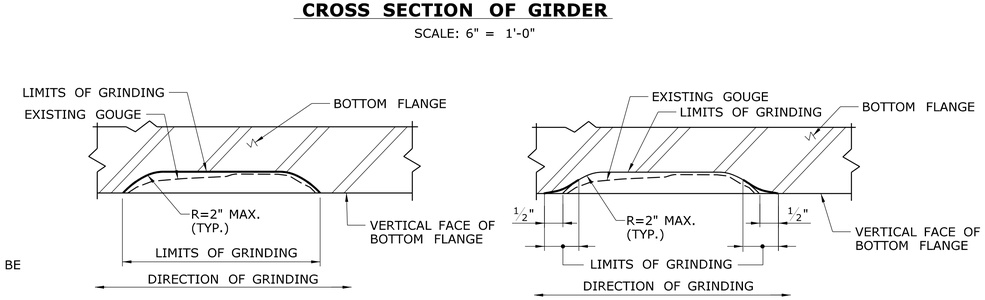

REPAIR TO VERTICAL EDGE OF BOTTOM FLANGE SHOWN
TREATMENT TO BOTTOM SURFACE OF FLANGE SIMILAR.

BOTTOM FLANGE GOUGE REPAIR DETAIL STEPS - SECTION B-

SCALE: 6" = 1'-0"

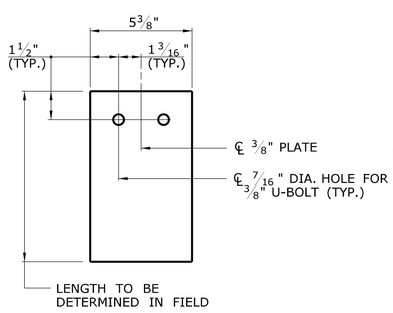

3/8" PLATE DETAIL

SCALE: 3" = 1'-0"

GOUGE REPAIR SEQUENCE

1: GRIND AREA OF GOUGE AS SHOWN IN "STEP 1" DETAIL TO REMOVE GOUGE.

2: INSPECT THE AREA OF GOUGE REMOVAL BY DYE PENETRANT TECHNIQUES TO ENSURE DEFECTS HAVE BEEN REMOVED, MAGNETIC PARTICAL INSPECTION TECHNIQUES MAY ALSO BE APPLIED. IF CRACKS ARE IDENTIFIED, CONTINUE GRINDING AND INSPECTION UNTIL THE CRACK IS COMPLETELY REMOVED.

3: FINISH GRINDING AS SHOWN IN "STEP 2" DETAIL TO BLEND THE EDGES OF THE GRINDED AREA INTO THE SURFACE OF THE SURROUNDING MATERIAL.

NOTE: GRINDING OF GOUGE IN THE BOTTOM FLANGE TO BE PAID FOR UNDER THE ITEM "STRUCTURAL STEEL". THE PAINT REMOVAL AND REPAINTING OF EXISTING STEEL TO BE PAID FOR UNDER THE ITEM "LOCALIZED PAINT REMOVAL AND FIELD PAINTING OF EXISTING STEEL".

REV.	DATE	REVISION DESCRIPTION	SHEET NO.
-	-	-	-
-	-	-	-
-	-	-	-
-	-	-	-
-	-	-	-
-	-	-	-

THE INFORMATION, INCLUDING ESTIMATED QUANTITIES OF WORK, SHOWN ON THESE SHEETS IS BASED ON LIMITED INVESTIGATIONS BY THE STATE AND IS IN NO WAY WARRANTED TO INDICATE THE CONDITIONS OF ACTUAL QUANTITIES OF WORK WHICH WILL BE REQUIRED.

Plotted Date: 1/2/2013

DESIGNER/DRAFTER: BW
CHECKED BY: JCM
SCALE AS NOTED

STATE OF CONNECTICUT
DEPARTMENT OF TRANSPORTATION

Filename: ...\SB_MSH_BR02366_S15_CLEAN_AND_PAINT_BEAM_END_DETAILS.dgn

SIGNATURE/BLOCK: OFFICE OF ENGINEERING
APPROVED BY:

PROJECT TITLE: BEAM END AND BEARING REPAIRS IN DISTRICT 1

TOWN: EAST HARTFORD
DRAWING TITLE: BRIDGE NO. 02366 CLEAN AND PAINT BEAM END DETAILS

PROJECT NO. 171-359
DRAWING NO. S-15
SHEET NO. 03.15

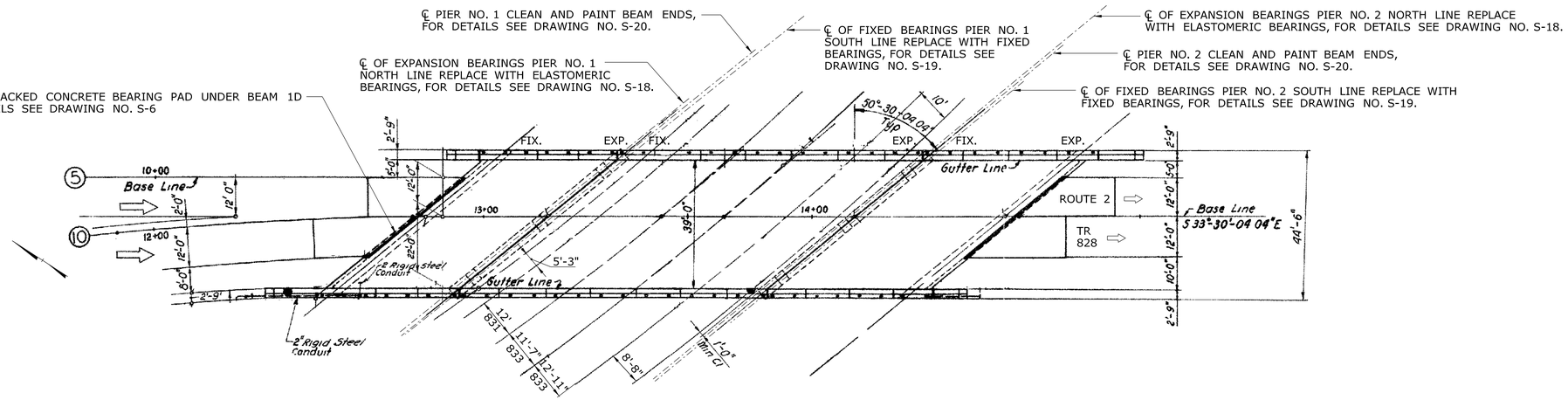

NOTE: FOR BEAM END STEEL REPAIR LOCATIONS SEE DRAWING NO. S-17.

PLAN - BRIDGE NOS. 02369 ROUTE 2 EB & I-84 TR 828 OVER I-84 TR 831 & 833

SCALE: 1"= 20'-0"

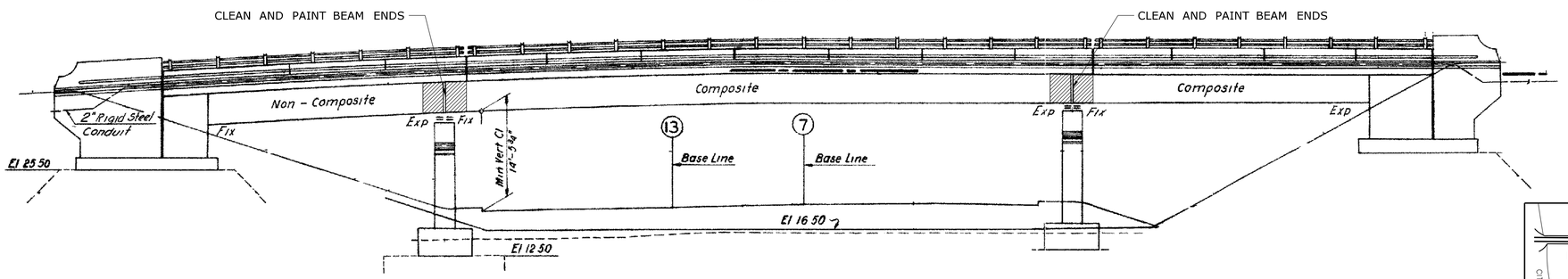

ELEVATION

SCALE: 1" = 10'

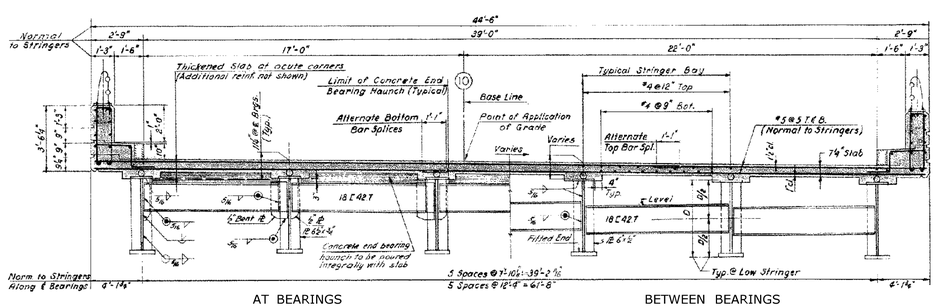

AT BEARINGS BETWEEN BEARINGS

CENTER SPAN CROSS SECTION

SCALE: ¼" = 1'-0"

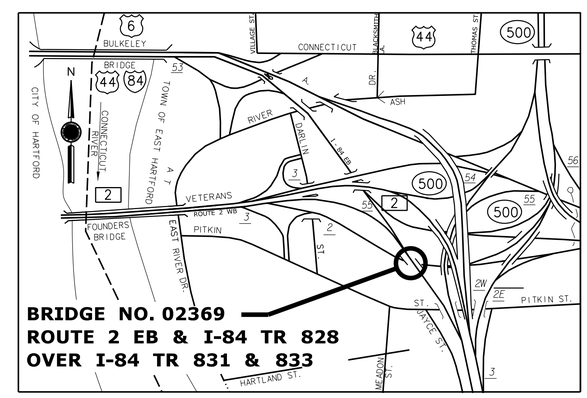

LOCATION PLAN

SCALE 0 2000 FT

REV.	DATE	REVISION DESCRIPTION	SHEET NO.
-	-	-	-
-	-	-	-
-	-	-	-
-	-	-	-
-	-	-	-
-	-	-	-

THE INFORMATION, INCLUDING ESTIMATED QUANTITIES OF WORK, SHOWN ON THESE SHEETS IS BASED ON LIMITED INVESTIGATIONS BY THE STATE AND IS IN NO WAY WARRANTED TO INDICATE THE CONDITIONS OF ACTUAL QUANTITIES OF WORK WHICH WILL BE REQUIRED.

Plotted Date: 1/2/2013

DESIGNER/DRAFTER: BW

CHECKED BY: JCM

SCALE AS NOTED

STATE OF CONNECTICUT
DEPARTMENT OF TRANSPORTATION

Filename: ...\SB_MSH_BR02369_S16_GENERAL_PLAN.dgn

SIGNATURE/BLOCK: OFFICE OF ENGINEERING

APPROVED BY:

PROJECT TITLE: BEAM END AND BEARING REPAIRS IN DISTRICT I

TOWN: EAST HARTFORD

DRAWING TITLE: BRIDGE NO. 02369 GENERAL PLAN

PROJECT NO. 171-359

DRAWING NO. S-16

SHEET NO. 03.16

EXISTING STRUCTURAL STEEL MATERIAL DESIGNATIONS:

ROLLED BEAMS: ASTM A 7
BUILT-UP AND SOLE PLATES: ASTM A 373
MASONRY PLATES: ASTM A 242
ALL OTHER STEEL: ASTM A 7

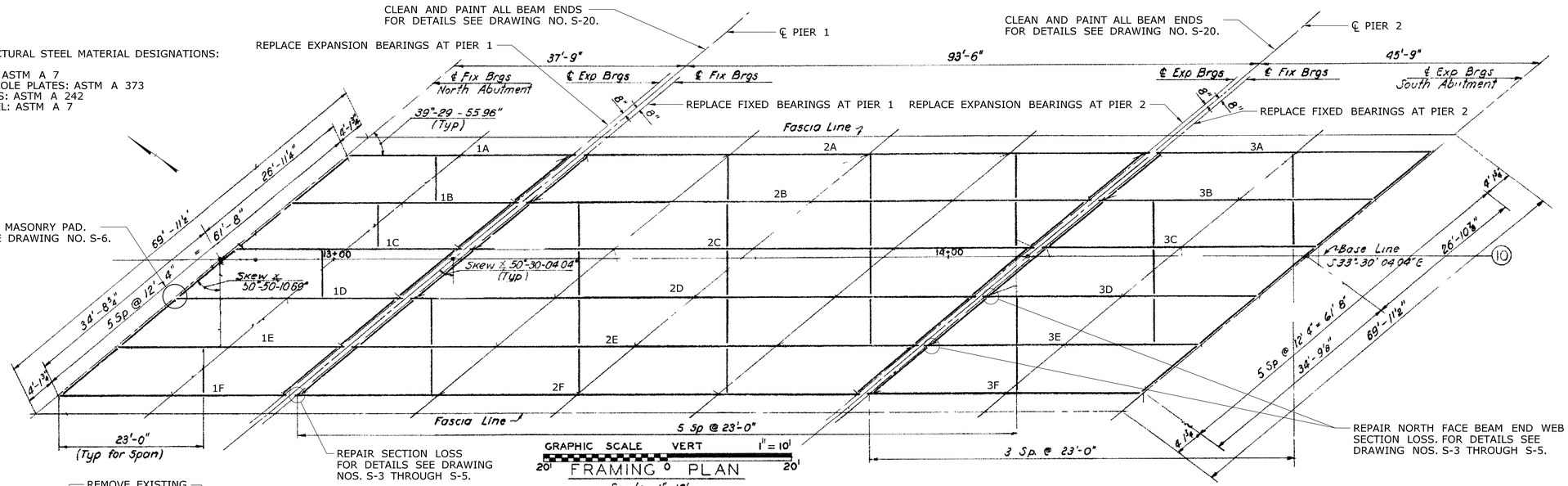

FRAMING PLAN
Scale 1" = 10'

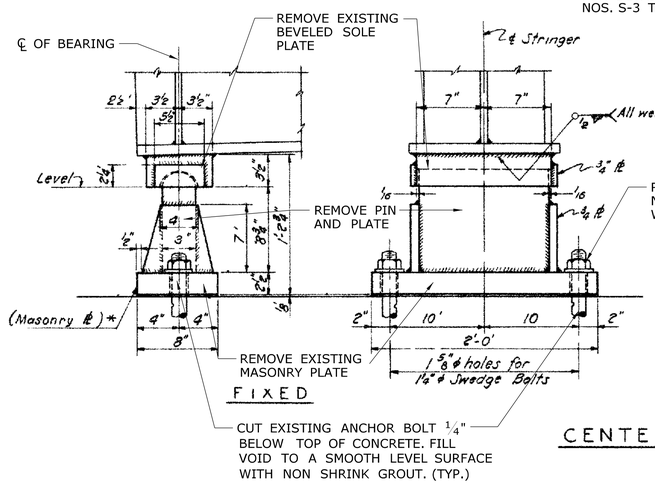

CENTER SPAN

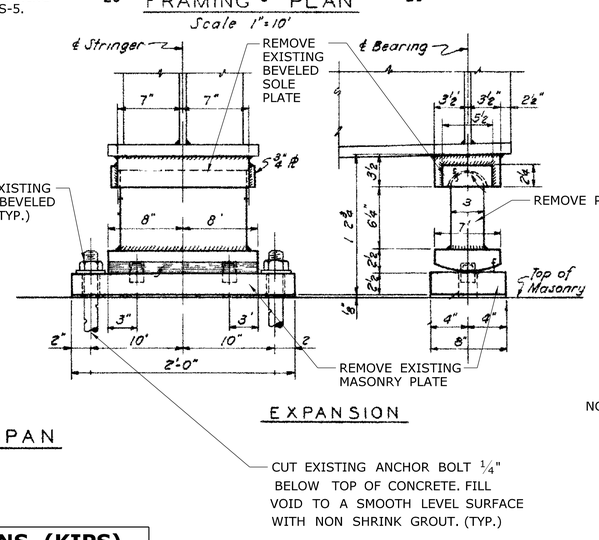

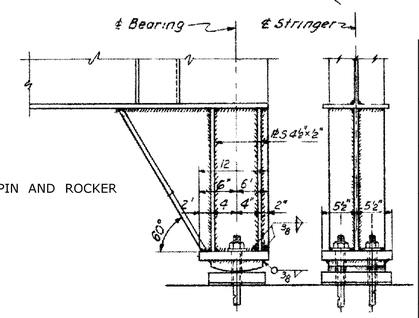

STRINGERS 1B-1E AND 3B-3E
INTERIOR STRINGERS
(Fixed & Expansion)

NOTE: SEE FASCIA GIRDER DETAIL BELOW FOR REMOVAL REQUIREMENTS.

STRINGER		
MARK	SPAN CC BRGS	MATERIAL
1A/1F	36'-8 7/16"	45"x¾" web, 12"x1" ℞s A & C
1B-1E	36'-8 7/16"	33 WF 130
2A-2F	91'-4⅞"	45"x¾" web, 14"x1⅜"x42'0" lg ℞ 'A' 2-14"x1" ℞s B, 16"x2¼"x67'0" lg ℞ 'C' & 2-16"x1¼" ℞s "D"
3A/3F	44'-8 7/16"	45"x¾" web, 12"x1" ℞s "A & C'
3B-3E	44'-8 7/16"	30 WF 108 9"x5/8"x32'0" lg ℞ 'C'

BEAM END REACTIONS (KIPS)			
MARK NO.	DL	S.D.L.	LL+I
1A & 1F	36	—	64
1B-1E	22	—	79
2A & 2F	41	21	90
2B-2E	49	21	111
3A & 3F	17	11	74
3B-3E	20	11	92

FOR NOTES SEE "ELASTOMERIC BEARING NOTES" AND "FIXED BEARING NOTES" ON DRAWING NO. S-2.

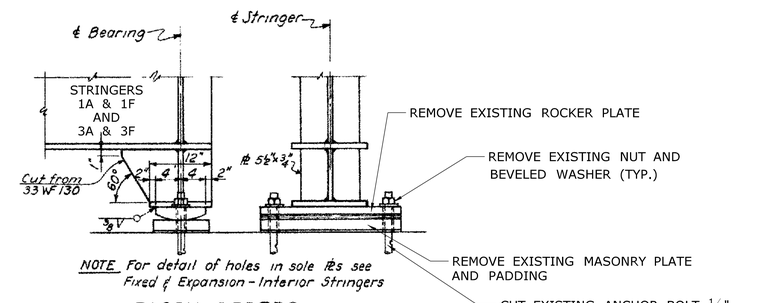

NOTE For detail of holes in sole ℞s see Fixed & Expansion - Interior Stringers

FASCIA GIRDERS
(Fixed & Expansion)

STOOL DETAILS
END SPANS AT PIERS

REV.	DATE	REVISION DESCRIPTION	SHEET NO.
-	-	-	-
-	-	-	-
-	-	-	-
-	-	-	-
-	-	-	-
-	-	-	-

THE INFORMATION, INCLUDING ESTIMATED QUANTITIES OF WORK, SHOWN ON THESE SHEETS IS BASED ON LIMITED INVESTIGATIONS BY THE STATE AND IS IN NO WAY WARRANTED TO INDICATE THE CONDITIONS OF ACTUAL QUANTITIES OF WORK WHICH WILL BE REQUIRED.

Plotted Date: 1/2/2013

DESIGNER/DRAFTER: BW
CHECKED BY: JCM
SCALE AS NOTED

STATE OF CONNECTICUT
DEPARTMENT OF TRANSPORTATION

Filename: ...\SB_MSH_BR02369_S17_ FRAMING_PLAN.dgn

SIGNATURE/BLOCK:
OFFICE OF ENGINEERING
APPROVED BY:

PROJECT TITLE:
BEAM END AND BEARING REPAIRS IN DISTRICT I

TOWN: EAST HARTFORD
DRAWING TITLE: BRIDGE NO. 02369 FRAMING PLAN

PROJECT NO. 171-359
DRAWING NO. S-17
SHEET NO. 03.17

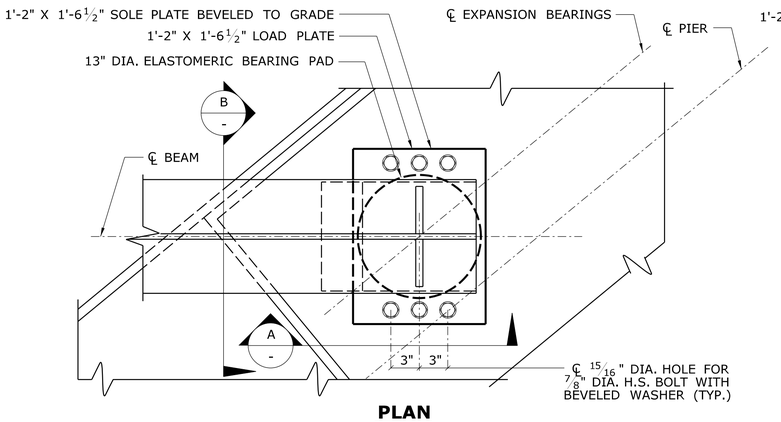

PLAN
SCALE: 1½" = 1'-0"

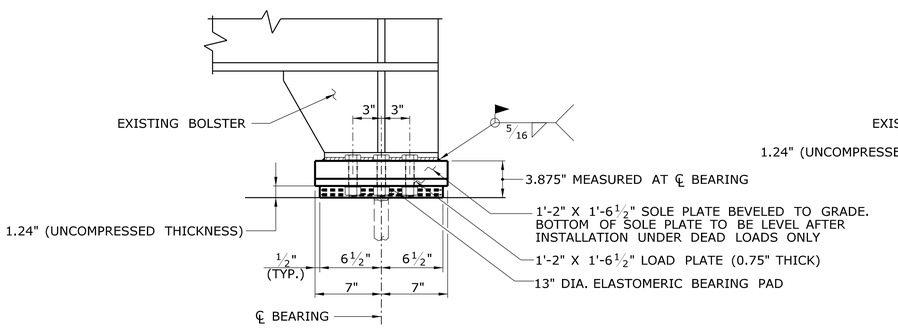

SECTION A
SCALE: 1½" = 1'-0"

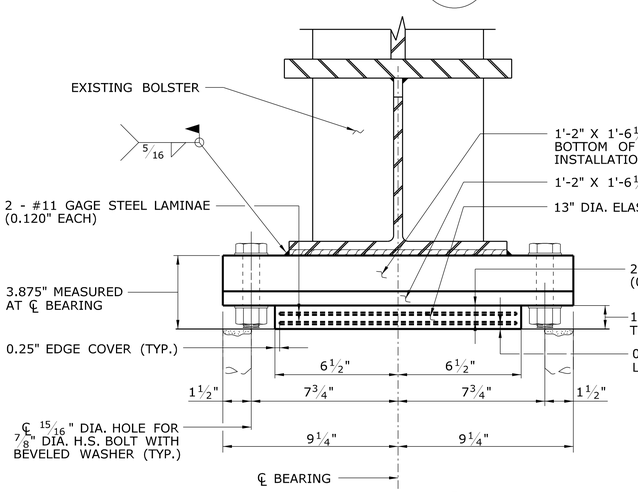

SECTION B
SCALE: 3" = 1'-0"

PROPOSED EXPANSION BEARING DETAILS FOR PIER 1 FASCIA GIRDERS

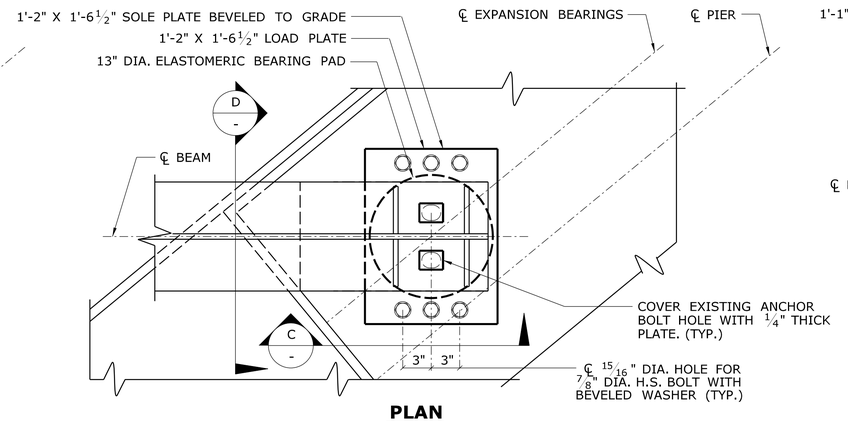

PLAN
SCALE: 1½" = 1'-0"

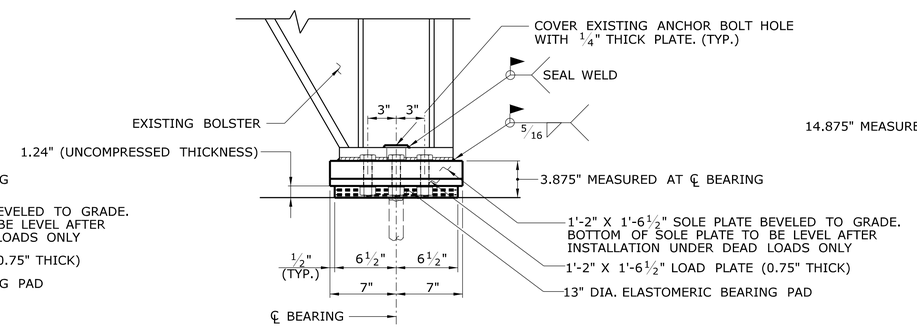

SECTION C
SCALE: 1½" = 1'-0"

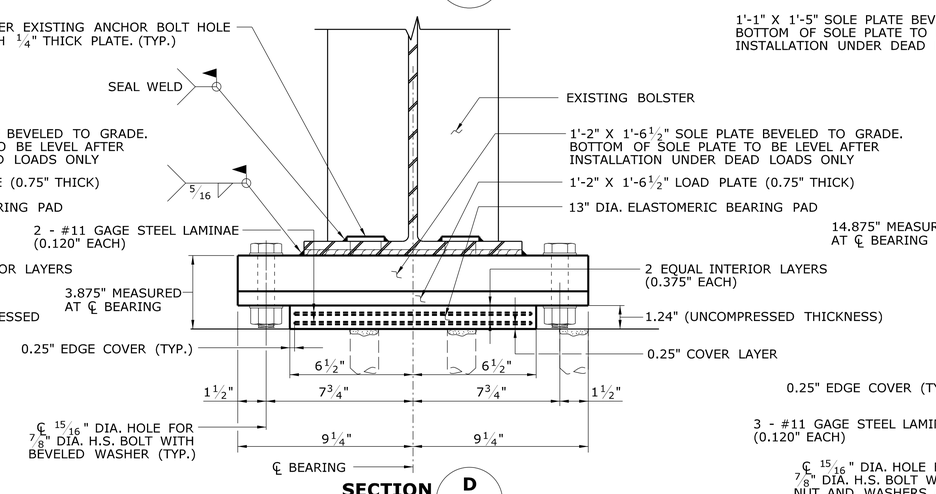

SECTION D
SCALE: 3" = 1'-0"

PROPOSED EXPANSION BEARING DETAILS FOR PIER 1 INTERIOR STRINGERS

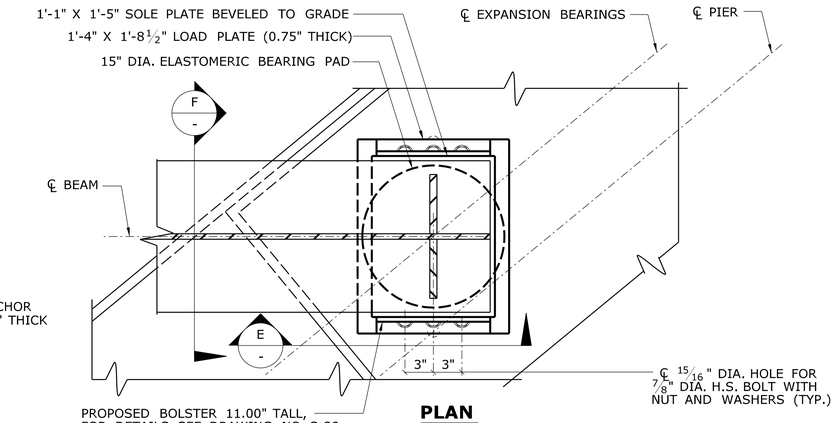

PLAN
SCALE: 1½" = 1'-0"

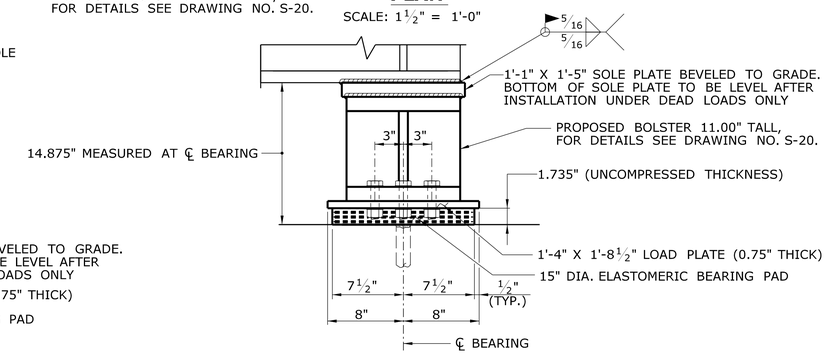

SECTION E
SCALE: 1½" = 1'-0"

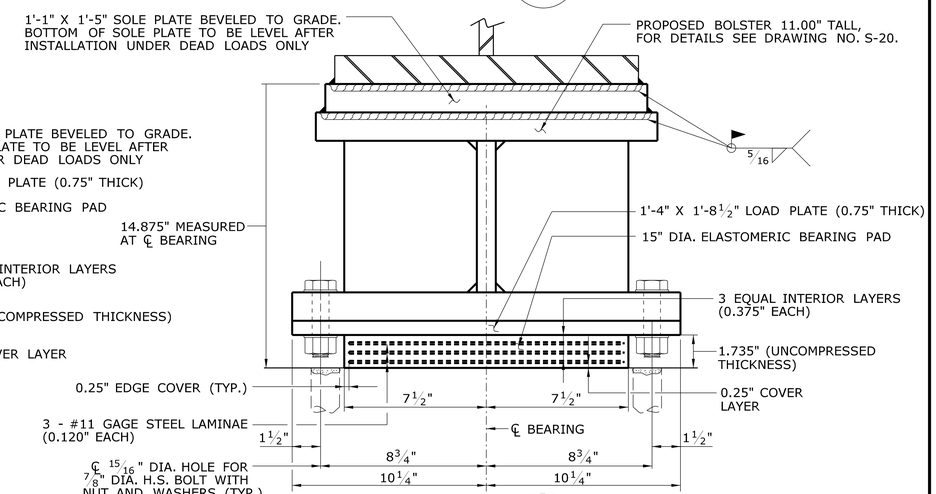

SECTION F
SCALE: 3" = 1'-0"

PROPOSED EXPANSION BEARING DETAILS FOR PIER 2

REV.	DATE	REVISION DESCRIPTION	SHEET NO.
-	-	-	-
-	-	-	-
-	-	-	-
-	-	-	-
-	-	-	-
-	-	-	-

THE INFORMATION, INCLUDING ESTIMATED QUANTITIES OF WORK, SHOWN ON THESE SHEETS IS BASED ON LIMITED INVESTIGATIONS BY THE STATE AND IS IN NO WAY WARRANTED TO INDICATE THE CONDITIONS OF ACTUAL QUANTITIES OF WORK WHICH WILL BE REQUIRED.

Plotted Date: 1/2/2013

DESIGNER/DRAFTER: JCM
CHECKED BY: JCM
SCALE AS NOTED

STATE OF CONNECTICUT
DEPARTMENT OF TRANSPORTATION

Filename: ...\SB_MSH_BR02369_S18_PROPOSED_BEARING_DETAILS_1.dgn

SIGNATURE/BLOCK:
OFFICE OF ENGINEERING
APPROVED BY:

PROJECT TITLE:
BEAM END AND BEARING REPAIRS IN DISTRICT I

TOWN: **EAST HARTFORD**
DRAWING TITLE: **BRIDGE NO. 02369 PROPOSED BEARING DETAILS 1**

PROJECT NO. **171-359**
DRAWING NO. **S-18**
SHEET NO. 03.18

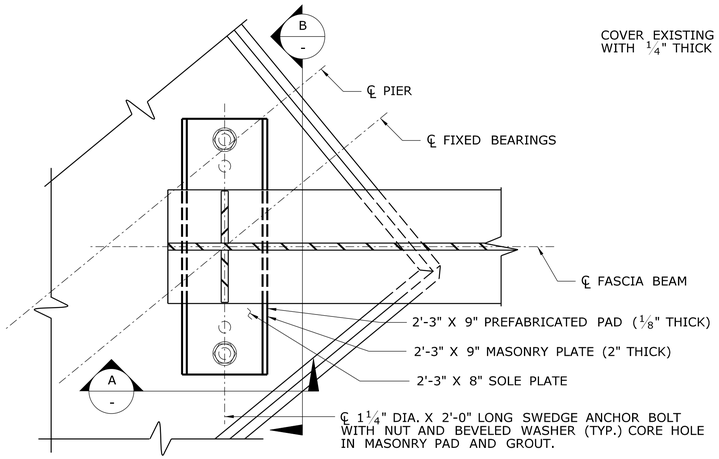

PLAN

SCALE: 1 1/2" = 1'-0"

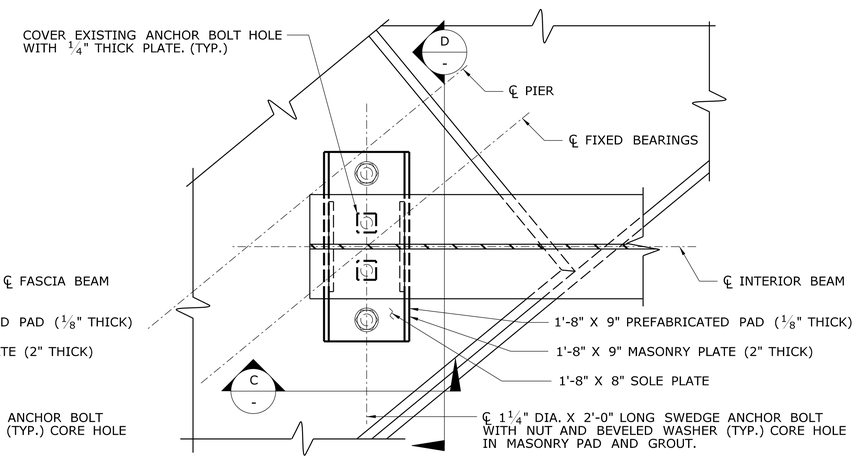

PLAN

SCALE: 1 1/2" = 1'-0"

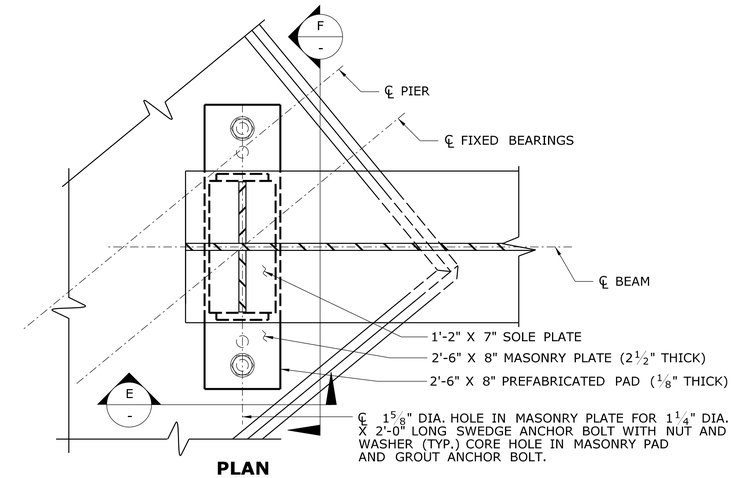

PLAN

SCALE: 1 1/2" = 1'-0"

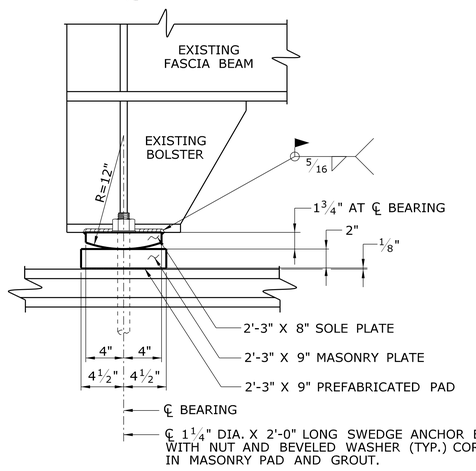

SECTION A

SCALE: 1 1/2" = 1'-0"

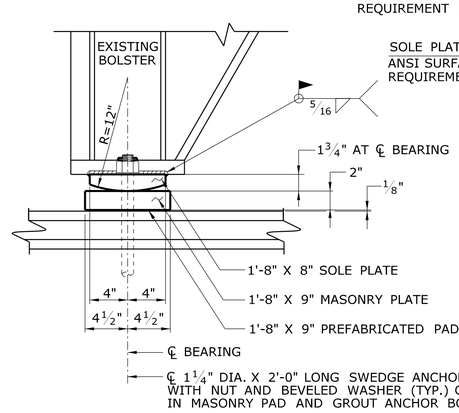

SECTION C

SCALE: 1 1/2" = 1'-0"

PAINT SHALL NOT BE APPLIED TO MACHINE FINISH SURFACES. APPLY GREASE TO ALL CONTACT SURFACES PRIOR TO INSTALLATION.

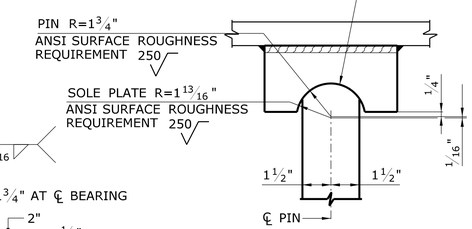

PIN DETAIL

SCALE: 3" = 1'-0"

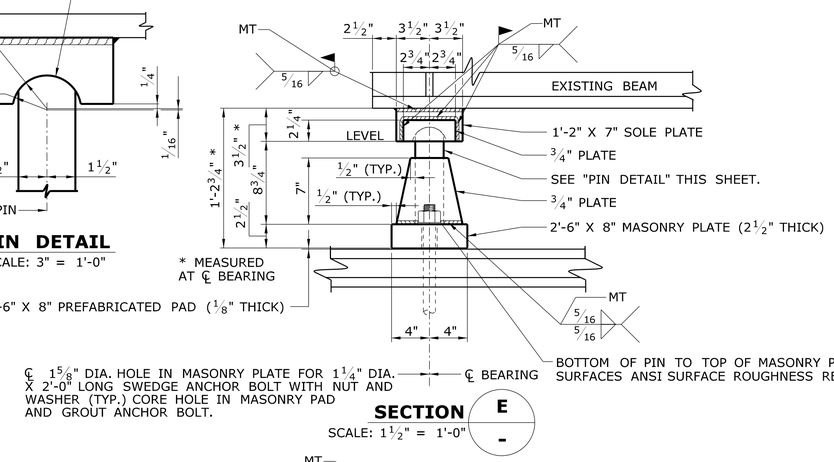

SECTION E

SCALE: 1 1/2" = 1'-0"

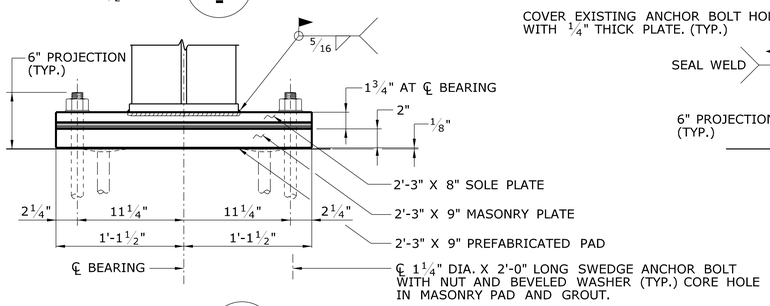

SECTION B

SCALE: 1 1/2" = 1'-0"

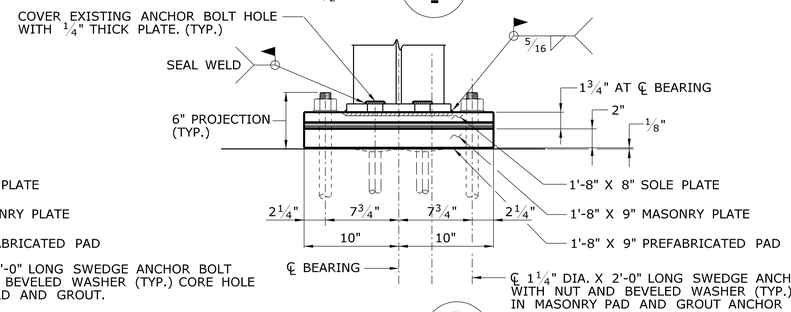

SECTION D

SCALE: 1 1/2" = 1'-0"

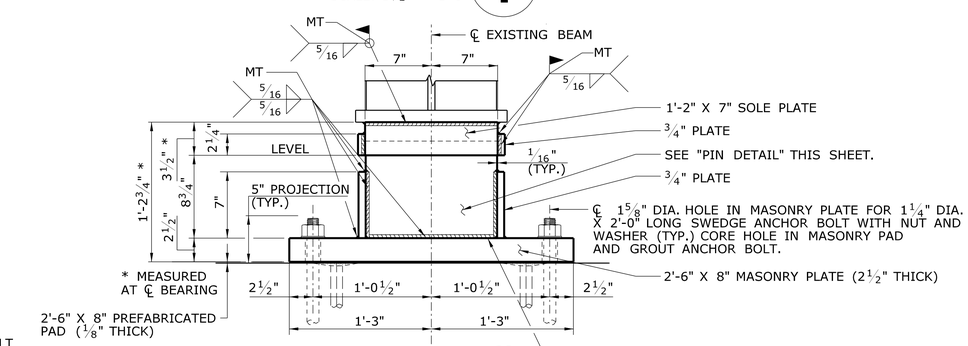

SECTION F

SCALE: 1 1/2" = 1'-0"

PROPOSED FIXED BEARING DETAILS FOR PIER 2 FASCIA GIRDERS

PROPOSED FIXED BEARING DETAILS FOR PIER 2 INTERIOR GIRDERS

PROPOSED FIXED BEARING DETAILS FOR PIER 1

FOR NOTES SEE "FIXED BEARING NOTES" ON DRAWING NO. S-2.

REV.	DATE	REVISION DESCRIPTION	SHEET NO.
-	-	-	-
-	-	-	-
-	-	-	-
-	-	-	-
-	-	-	-
-	-	-	-

THE INFORMATION, INCLUDING ESTIMATED QUANTITIES OF WORK, SHOWN ON THESE SHEETS IS BASED ON LIMITED INVESTIGATIONS BY THE STATE AND IS IN NO WAY WARRANTED TO INDICATE THE CONDITIONS OF ACTUAL QUANTITIES OF WORK WHICH WILL BE REQUIRED.

Plotted Date: 1/2/2013

DESIGNER/DRAFTER: JCM

CHECKED BY: JCM

SCALE AS NOTED

STATE OF CONNECTICUT
DEPARTMENT OF TRANSPORTATION

Filename: ...\SB_MSH_BR02369_S19_PROPOSED_BEARING_DETAILS_2.dgn

SIGNATURE/BLOCK:
OFFICE OF ENGINEERING

APPROVED BY:

PROJECT TITLE:
BEAM END AND BEARING REPAIRS IN DISTRICT 1

TOWN: EAST HARTFORD

DRAWING TITLE: BRIDGE NO. 02369 PROPOSED BEARING DETAILS 2

PROJECT NO. 171-359

DRAWING NO. S-19

SHEET NO. 03.19

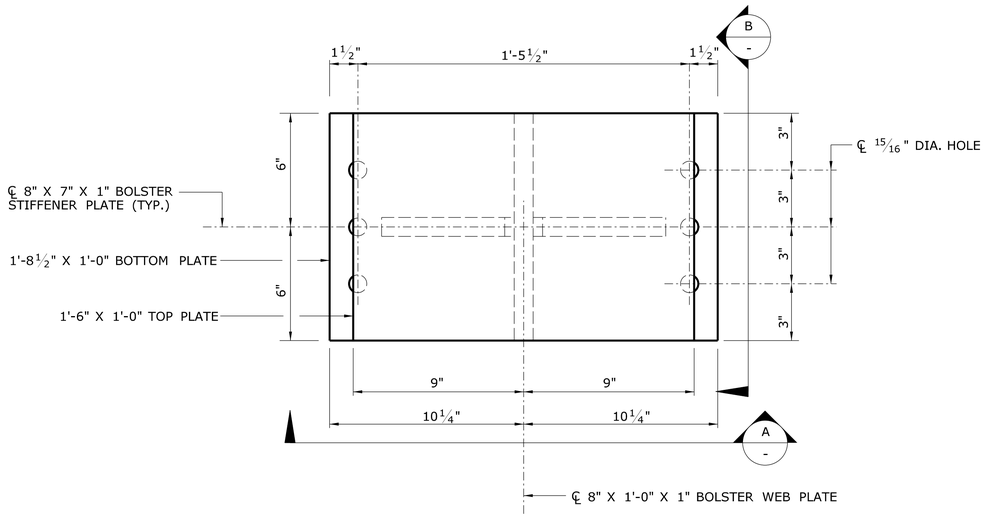

PLAN

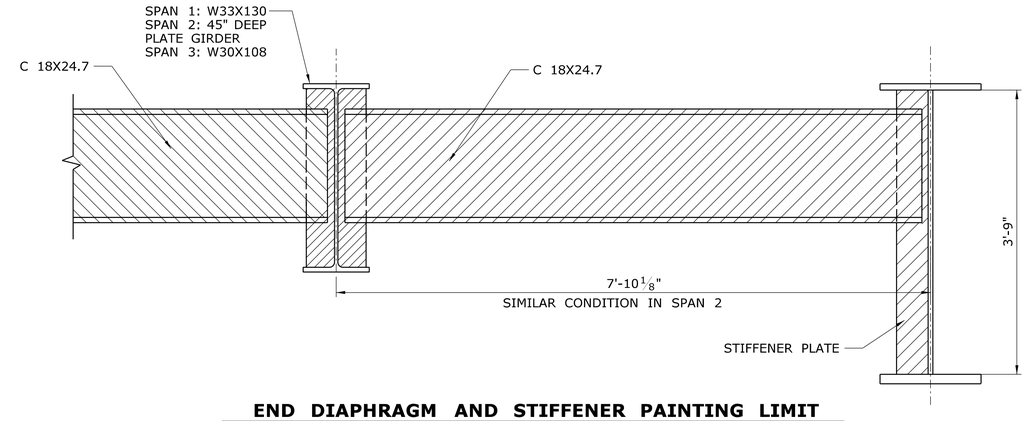

END DIAPHRAGM AND STIFFENER PAINTING LIMIT

SCALE: 1"= 1'-0"

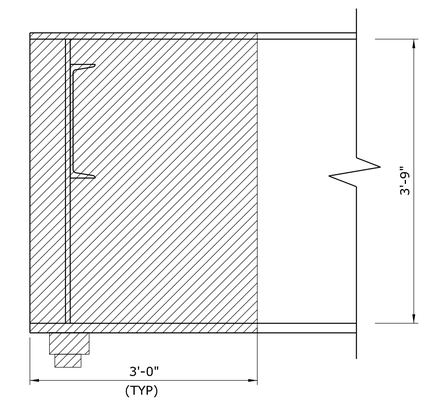

BEAM END PAINTING LIMIT SPAN 2 SHOWN
LIMITS FOR SPAN 1 & 3 SIMILAR

SCALE: 1"= 1'-0"

DENOTES LIMITS OF CLEANING AND PAINTING OF BEAM END AND BEARINGS. THIS WORK TO BE INCLUDED FOR PAYMENT UNDER THE ITEM "LOCALIZED PAINT REMOVAL AND FIELD PAINTING OF EXISTING STEEL (SITE NO. 3)".

FOR NOTES SEE "PAINTING NOTES" ON DRAWING NO. S-2.

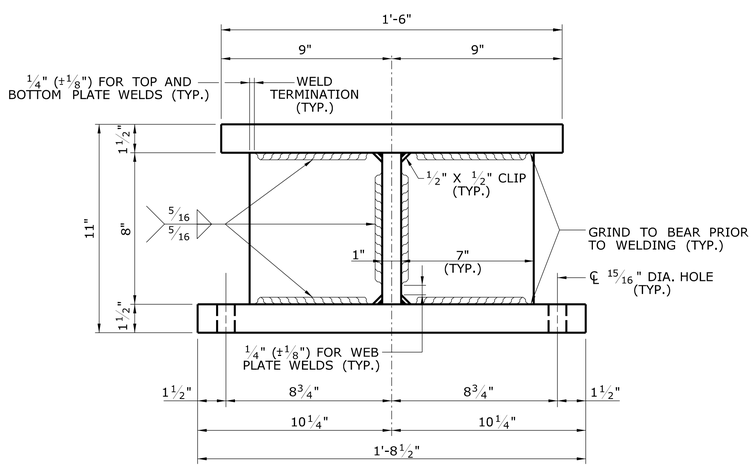

SECTION A / -

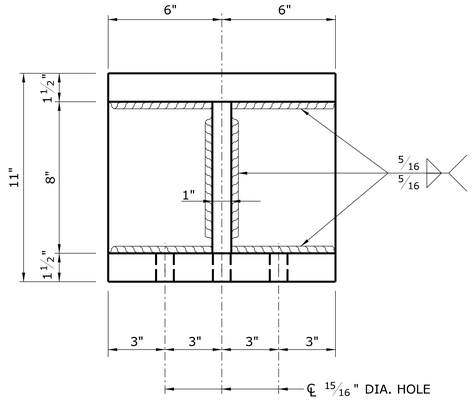

SECTION B / -

PROPOSED BOLSTER

SCALE: 3" = 1'-0"

REV.	DATE	REVISION DESCRIPTION	SHEET NO.
-	-	-	-
-	-	-	-
-	-	-	-
-	-	-	-
-	-	-	-
-	-	-	-

THE INFORMATION, INCLUDING ESTIMATED QUANTITIES OF WORK, SHOWN ON THESE SHEETS IS BASED ON LIMITED INVESTIGATIONS BY THE STATE AND IS IN NO WAY WARRANTED TO INDICATE THE CONDITIONS OF ACTUAL QUANTITIES OF WORK WHICH WILL BE REQUIRED.

Plotted Date: 1/2/2013

DESIGNER/DRAFTER: **BW**

CHECKED BY: **JCM**

SCALE AS NOTED

STATE OF CONNECTICUT
DEPARTMENT OF TRANSPORTATION

Filename: ...\SB_MSH_BR02369_S20_CLEAN_AND_PAINT_DETAILS.dgn

SIGNATURE/ BLOCK:

OFFICE OF ENGINEERING

APPROVED BY:

PROJECT TITLE:

BEAM END AND BEARING REPAIRS IN DISTRICT 1

TOWN: **EAST HARTFORD**

DRAWING TITLE: **BRIDGE NO. 02369 CLEAN AND PAINT DETAILS**

PROJECT NO. **171-359**

DRAWING NO. **S-20**

SHEET NO. 03.20

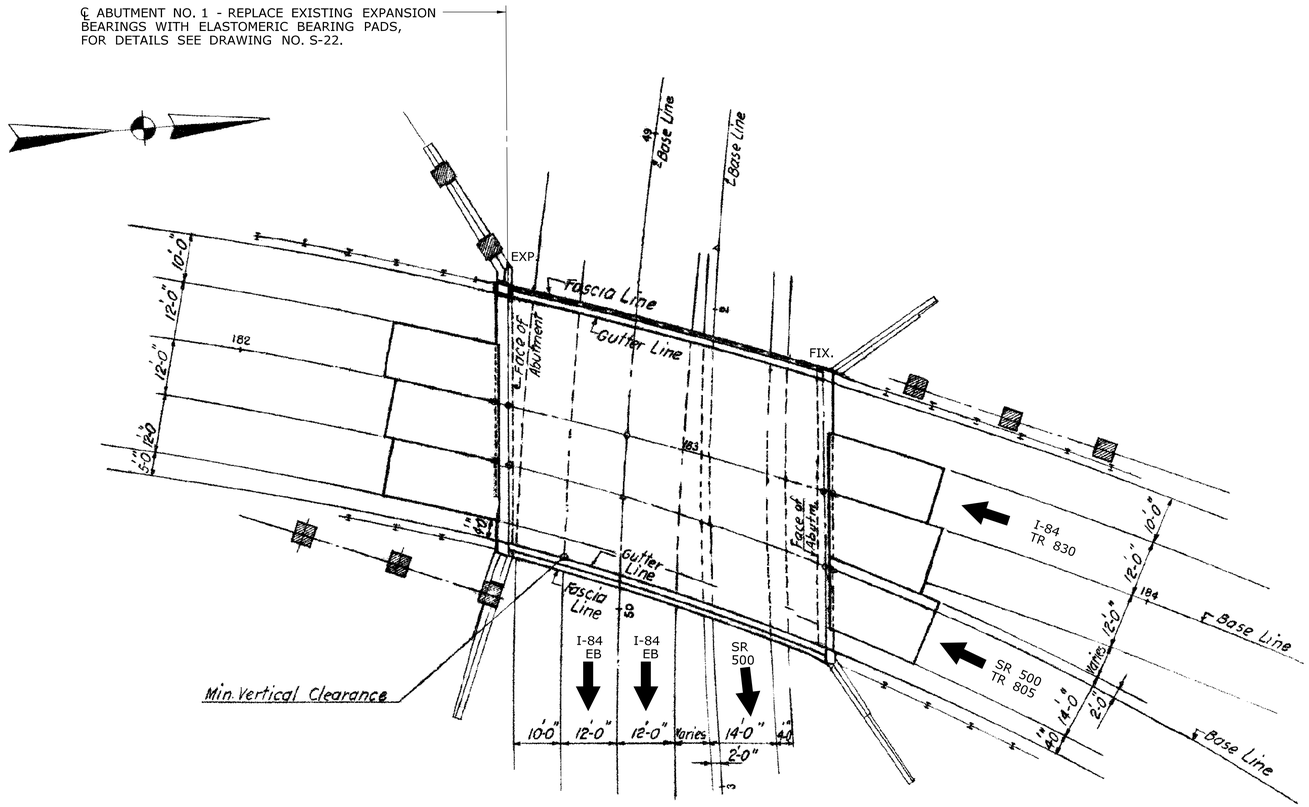

GENERAL PLAN - BRIDGE NO. 02378, I-84 TR 830 & SR 500 TR 805 OVER I-84 EB & SR 500

SCALE: 1/16" = 1'-0"

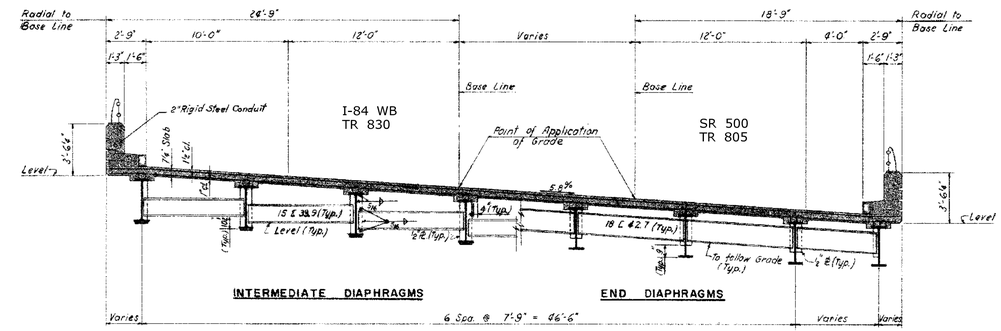

TYPICAL CROSS SECTION

SCALE: 3/16" = 1'-0"

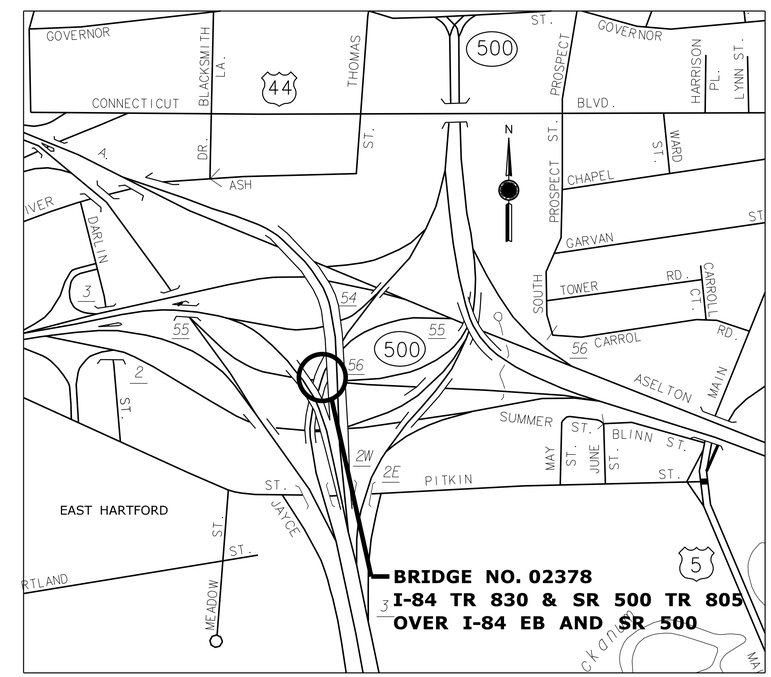

LOCATION PLAN

SCALE

0 1000 FEET

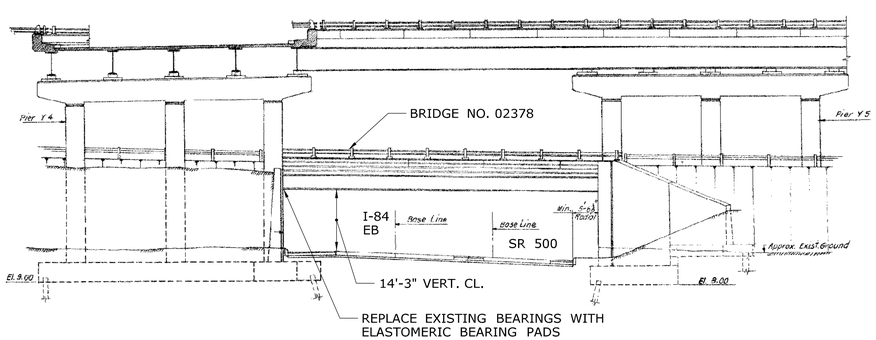

ELEVATION

SCALE: 1/16" = 1'-0"

REV.	DATE	REVISION DESCRIPTION	SHEET NO.
-	-	-	-
-	-	-	-
-	-	-	-
-	-	-	-
-	-	-	-
-	-	-	-

THE INFORMATION, INCLUDING ESTIMATED QUANTITIES OF WORK, SHOWN ON THESE SHEETS IS BASED ON LIMITED INVESTIGATIONS BY THE STATE AND IS IN NO WAY WARRANTED TO INDICATE THE CONDITIONS OF ACTUAL QUANTITIES OF WORK WHICH WILL BE REQUIRED.

Plotted Date: 1/2/2013

DESIGNER/DRAFTER: TDC

CHECKED BY: JCM

SCALE AS NOTED

STATE OF CONNECTICUT
DEPARTMENT OF TRANSPORTATION

Filename: ...\SB_MSH_BR02378_S21_GENERAL_PLAN.dgn

SIGNATURE/ BLOCK:
OFFICE OF ENGINEERING

APPROVED BY:

PROJECT TITLE:
BEAM END AND BEARING REPAIRS IN DISTRICT 1

TOWN: EAST HARTFORD

DRAWING TITLE: BRIDGE NO. 02378 GENERAL PLAN

PROJECT NO. 171-359

DRAWING NO. S-21

SHEET NO. 03.21

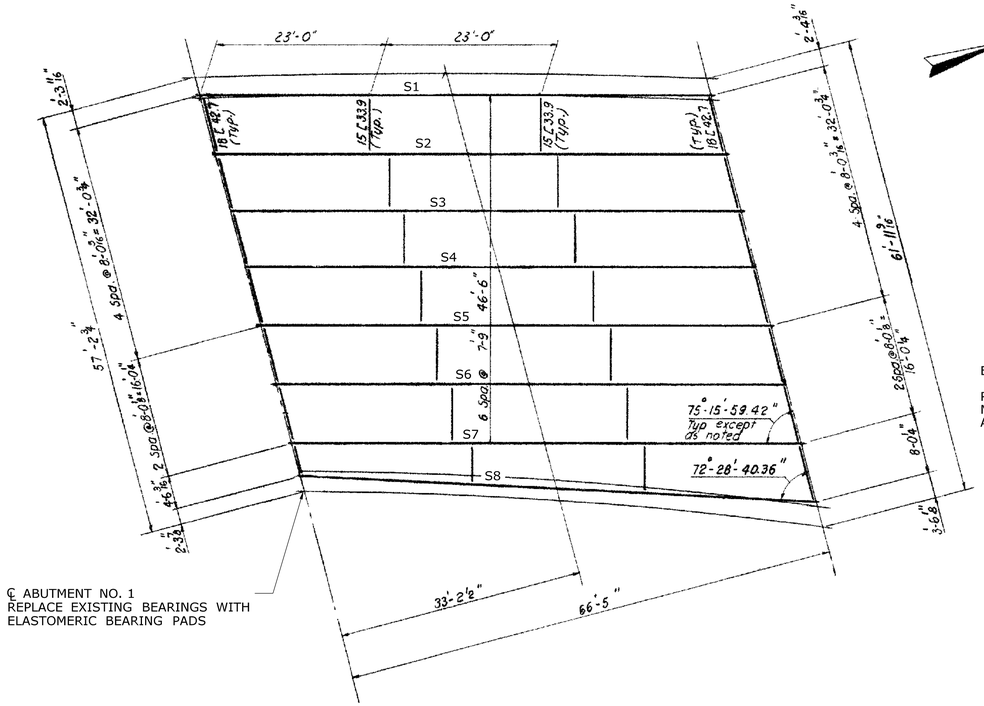

FRAMING PLAN - BRIDGE NO. 02378, I-84 TR OVER I-84 E.B. & SR 500

SCALE: 1" = 10'

MARK	LENGTH C TO C BRG	MATERIAL	COVER PLATE SIZE	COVER PLATE LENGTH
S1	68'-8⅛"	36 WF 182	10"x1"	48'-0"
S2-S7	68'-8⅛"	36 WF 194	10"x1¼"	49'-0"
S8	69'-7¾"	36 WF 170	10"x¾"	47'-0"

EXISTING STRUCTURAL STEEL MATERIAL DESIGNATIONS:

ROLLED BEAMS AND SOLE PLATES: ASTM A 373
MASONRY PLATES: ASTM A 242
ALL OTHER STEEL: ASTM A 7

BEAM REACTIONS (KIPS)			
MARK NO.	D.L.	S.D.L.	LL + I
S1	53	16	84
S2 - S7	53	16	84
S8	53	16	84

BEAM REACTION NOTES:

1. THE GIRDER REACTIONS HAVE BEEN PROVIDED FOR INFORMATION ONLY AND MAY BE USED TO DEVELOP DETAILS FOR JACKING THE SUPERSTRUCTURE.
2. THE DEAD LOAD REACTIONS ARE DUE TO THE STRUCTURAL STEEL AND CONCRETE SLAB.
3. THE SUPERIMPOSED DEAD LOAD REACTIONS ARE DUE TO THE PARAPETS AND BITUMINOUS CONCRETE OVERLAY.

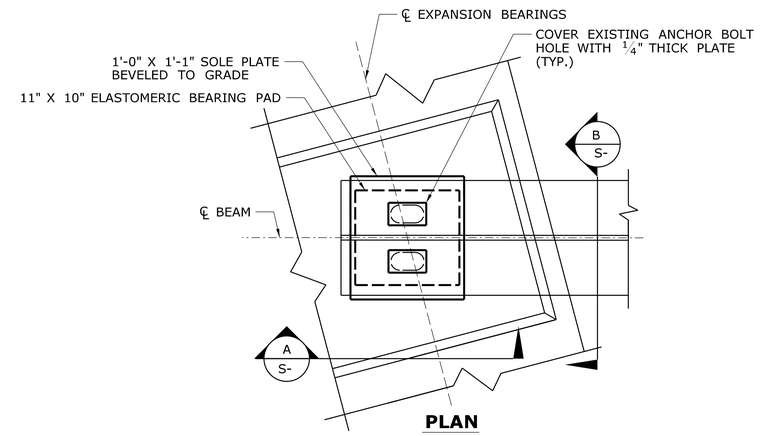

PLAN

SCALE: 1½" = 1'-0"

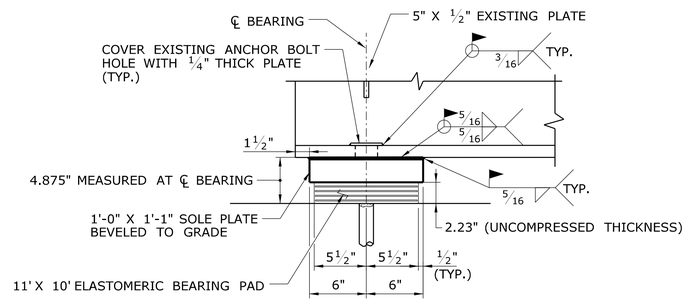

SECTION A

SCALE: 1½" = 1'-0"

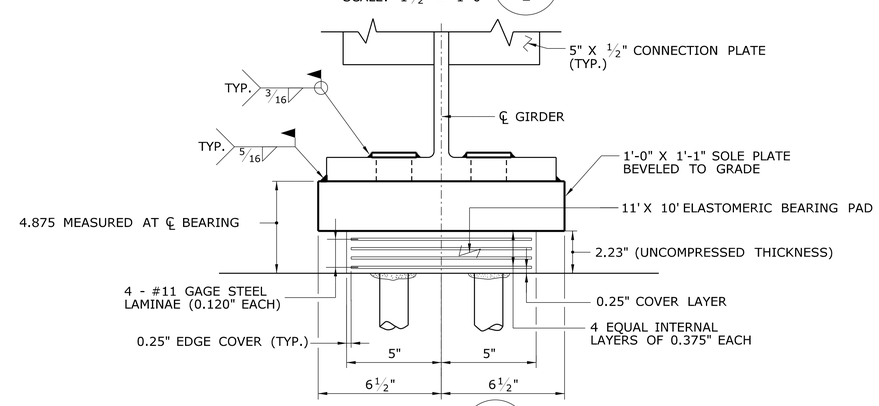

SECTION B

SCALE: 3" = 1'-0"

PROPOSED ELASTOMERIC EXPANSION BEARING

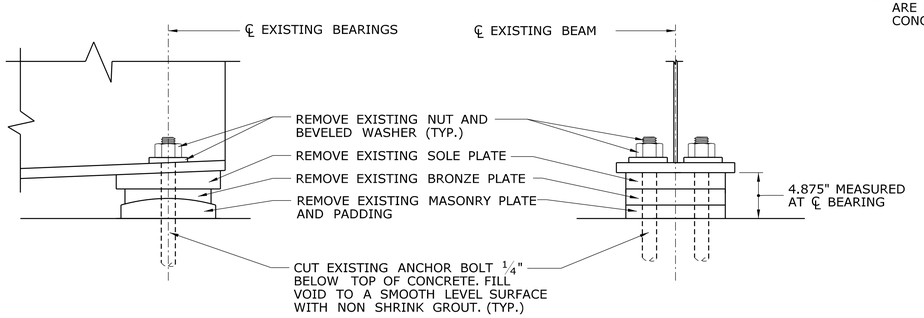

SIDE ELEVATION **END ELEVATION**

EXISTING EXPANSION BEARING DETAILS

SCALE: 1½" = 1'-0"

NOTE: WORK INVOLVING JACKING THE EXISTING SUPERSTRUCTURE TO BE PAID FOR UNDER THE ITEM "JACKING FOR BEARING REPLACEMENT". WORK INVOLVING THE REMOVAL AND INSTALLATION OF THE EXISTING BEARING TO BE PAID FOR UNDER THE ITEM "BEARING REPLACEMENT WITH ELASTOMERIC BEARING PADS".

FOR NOTES SEE "ELASTOMERIC BEARING NOTES" ON DRAWING NO. S-2.

REV.	DATE	REVISION DESCRIPTION	SHEET NO.
-	-	-	-
-	-	-	-
-	-	-	-
-	-	-	-
-	-	-	-
-	-	-	-

THE INFORMATION, INCLUDING ESTIMATED QUANTITIES OF WORK, SHOWN ON THESE SHEETS IS BASED ON LIMITED INVESTIGATIONS BY THE STATE AND IS IN NO WAY WARRANTED TO INDICATE THE CONDITIONS OF ACTUAL QUANTITIES OF WORK WHICH WILL BE REQUIRED.

Plotted Date: 1/2/2013

DESIGNER/DRAFTER: TDC
CHECKED BY: JCM
SCALE AS NOTED

STATE OF CONNECTICUT
DEPARTMENT OF TRANSPORTATION

Filename: ...\SB_MSH_BR02378_S22_PROPOSED_BEARING_DETAILS.dgn

SIGNATURE/BLOCK: OFFICE OF ENGINEERING
APPROVED BY:

PROJECT TITLE: BEAM END AND BEARING REPAIRS IN DISTRICT 1

TOWN: EAST HARTFORD
DRAWING TITLE: BRIDGE NO. 02378 PROPOSED BEARING DETAILS

PROJECT NO. 171-359
DRAWING NO. S-22
SHEET NO. 03.22

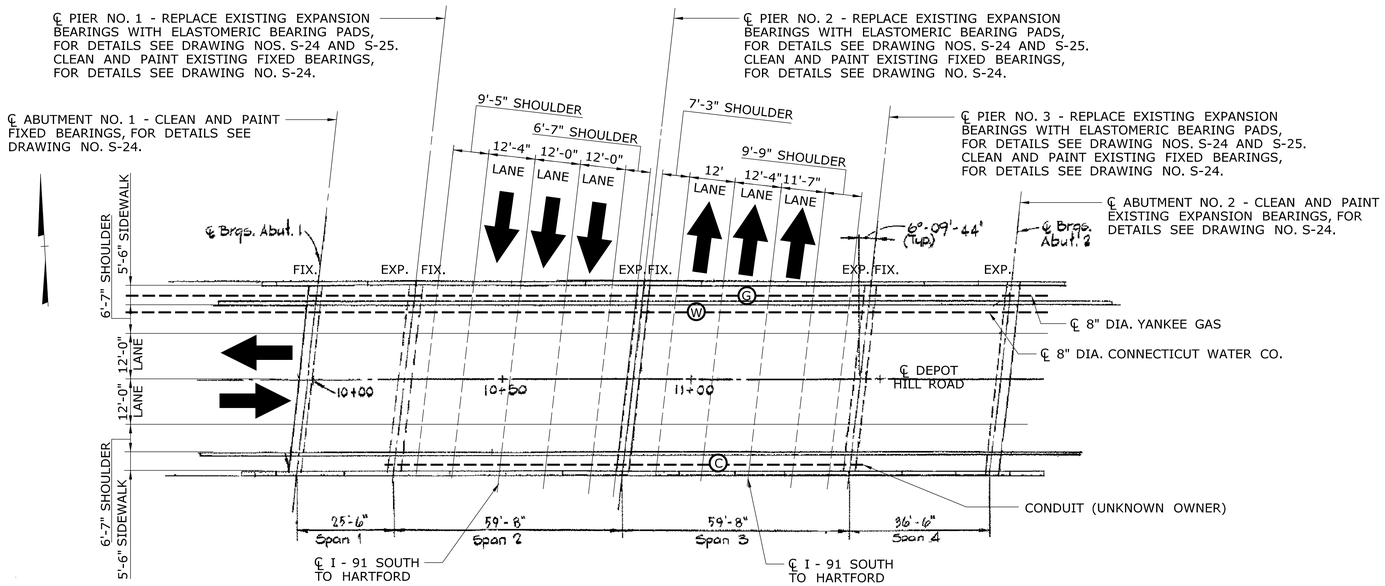

PLAN - BRIDGE NO. 01275, SR 510 (DEPOT HILL ROAD) OVER I - 91, ENFIELD

SCALE: 1" = 20'

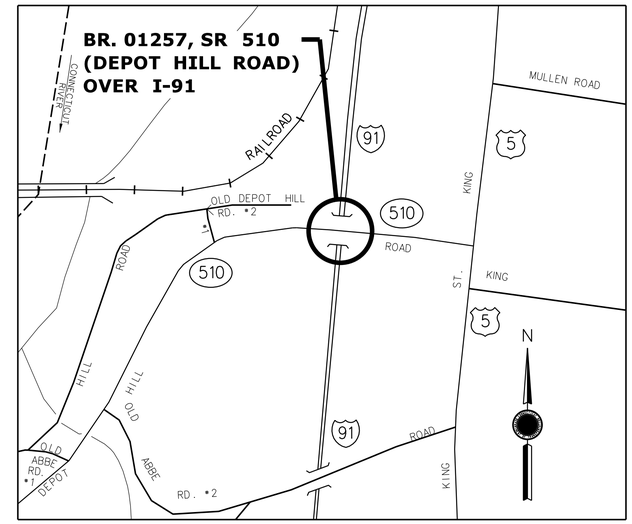

LOCATION PLAN

SCALE 0 1000 FT

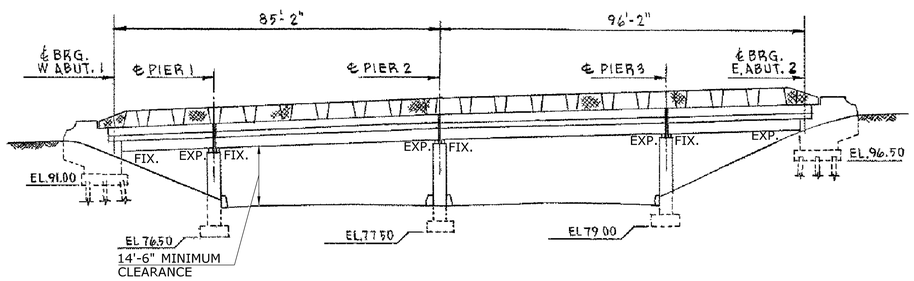

ELEVATION

SCALE: 1" = 20'

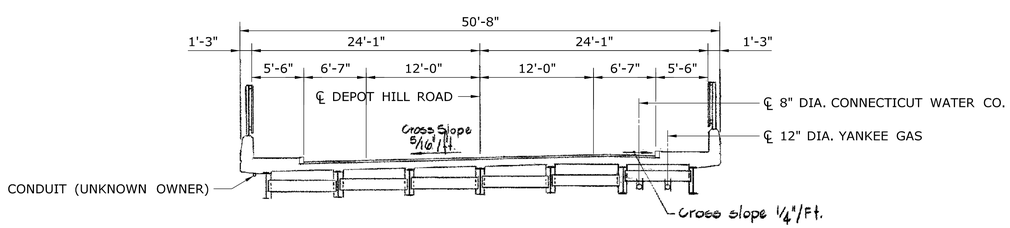

TYPICAL BRIDGE CROSS SECTION - LOOKING WEST

SCALE: 1/8" = 1' - 0"

REV.	DATE	REVISION DESCRIPTION	SHEET NO.
-	-	-	-
-	-	-	-
-	-	-	-
-	-	-	-
-	-	-	-
-	-	-	-

THE INFORMATION, INCLUDING ESTIMATED QUANTITIES OF WORK, SHOWN ON THESE SHEETS IS BASED ON LIMITED INVESTIGATIONS BY THE STATE AND IS IN NO WAY WARRANTED TO INDICATE THE CONDITIONS OF ACTUAL QUANTITIES OF WORK WHICH WILL BE REQUIRED.

Plotted Date: 1/2/2013

DESIGNER/DRAFTER: BU
CHECKED BY: JCM
SCALE AS NOTED

STATE OF CONNECTICUT
DEPARTMENT OF TRANSPORTATION

Filename: ...\SB_MSH_BR01275_S23_GENERAL_PLAN.dgn

SIGNATURE/ BLOCK:
OFFICE OF ENGINEERING
APPROVED BY:

PROJECT TITLE:
BEAM END AND BEARING REPAIRS IN DISTRICT 1

TOWN: ENFIELD
DRAWING TITLE: BRIDGE NO. 01275 GENERAL PLAN

PROJECT NO. 171-359
DRAWING NO. S-23
SHEET NO. 03.23

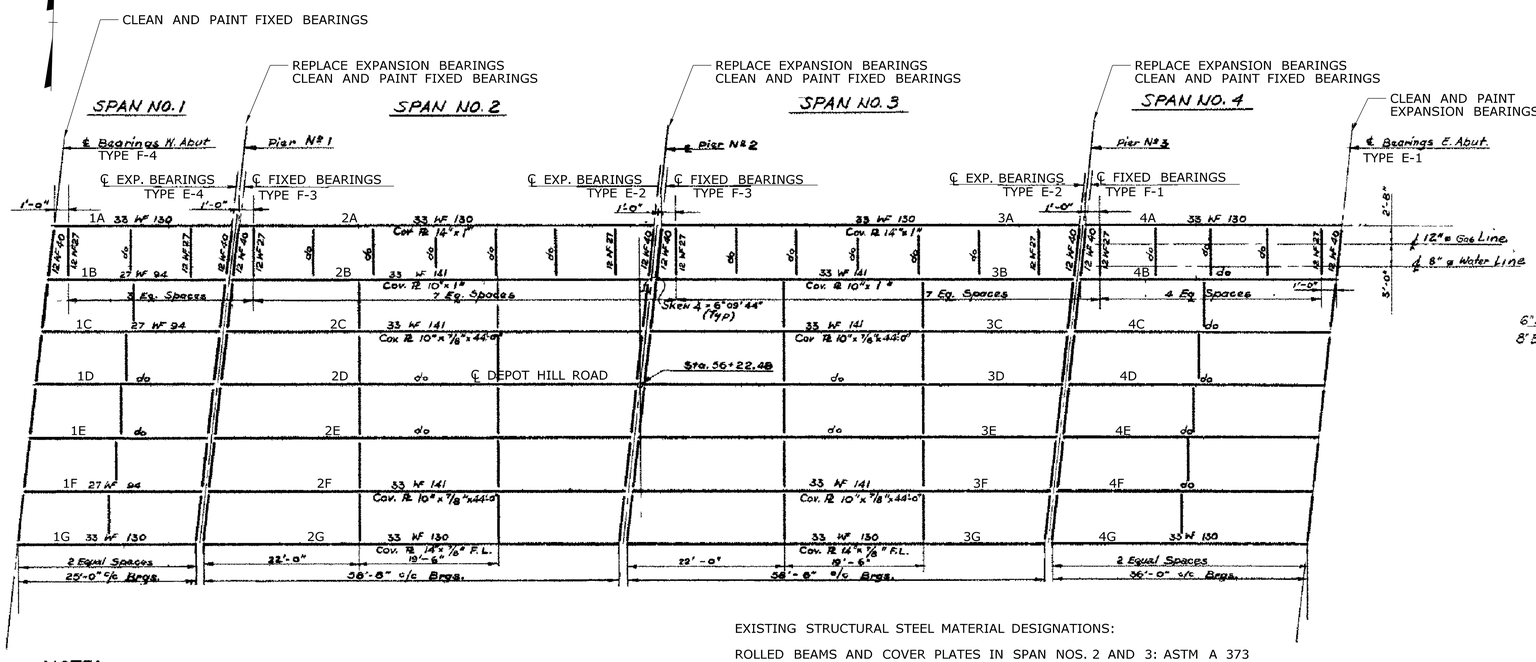

EXISTING STRUCTURAL STEEL MATERIAL DESIGNATIONS:

ROLLED BEAMS AND COVER PLATES IN SPAN NOS. 2 AND 3: ASTM A 373
ALL OTHER STEEL: ASTM A 7

NOTE:

All diaphragms to be 15 [33.9 unless otherwise noted.

FRAMING PLAN

SCALE: 1"=10'-0"

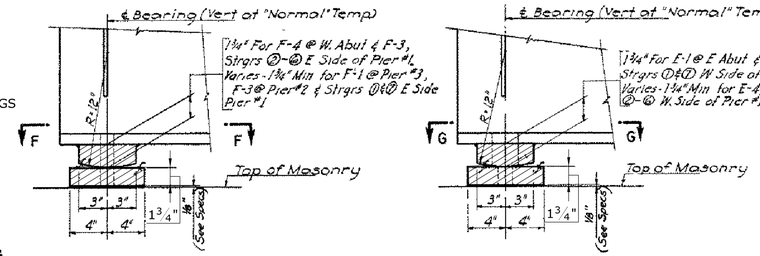

FIXED BEARINGS TYPE F-1, F-3 & F-4
Scale 1½"=1'-0"

EXPANSION BEARINGS TYPE E-1 & E-4
Scale 1½"=1'-0"

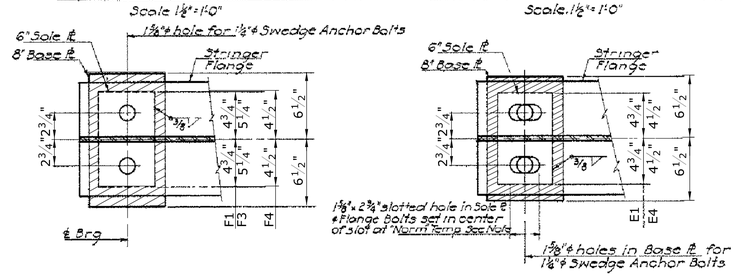

SECTION F-F
Scale 1½"=1'-0"

SECTION G-G
Scale 1½"=1'-0"

CLEAN AND PAINT BEARINGS DETAIL

DENOTES LIMITS OF CLEANING AND PAINTING OF BEARINGS. THIS WORK TO BE INCLUDED FOR PAYMENT UNDER THE ITEM "LOCALIZED PAINT REMOVAL AND FIELD PAINTING OF EXISTING STEEL (SITE NO. 5)".

NOTE: THESE DETAILS ARE FOR INFORMATION ONLY.

FOR NOTES SEE "PAINTING NOTES" ON DRAWING NO. S-2.

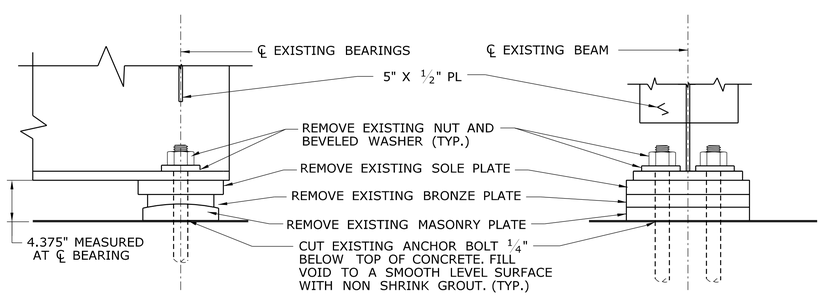

SIDE ELEVATION

END ELEVATION

EXISTING EXPANSION BEARING DETAILS TYPE E-2

SCALE: 1½" =1'-0"

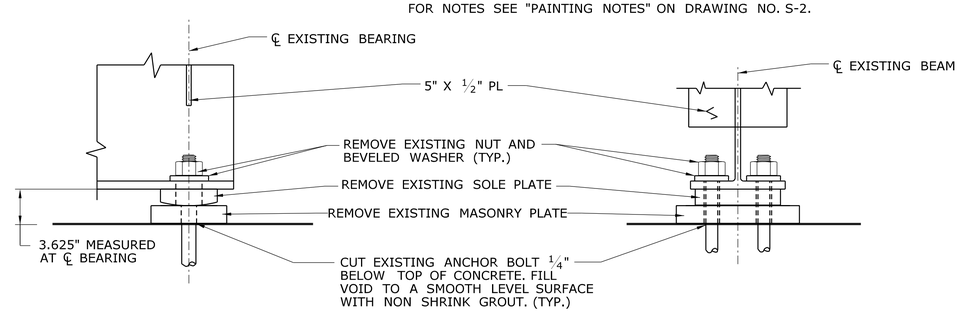

SIDE ELEVATION

END ELEVATION

EXISTING EXPANSION BEARING DETAILS TYPE E-4

SCALE: 1½" =1'-0"

NOTES:
WORK INVOLVING JACKING THE EXISTING SUPERSTRUCTURE TO BE PAID FOR UNDER THE ITEM "JACKING FOR BEARING REPLACEMENT".
WORK INVOLVING THE REMOVAL OF THE EXISTING BEARING TO BE PAID FOR UNDER THE ITEM "BEARING REPLACEMENT WITH ELASTOMERIC BEARING PADS".
FOR ADDITIONAL NOTES SEE "EXPANSION BEARING NOTES" ON DRAWING NO. S-2.

REV.	DATE	REVISION DESCRIPTION	SHEET NO.
-	-	-	-
-	-	-	-
-	-	-	-
-	-	-	-
-	-	-	-
-	-	-	-

THE INFORMATION, INCLUDING ESTIMATED QUANTITIES OF WORK, SHOWN ON THESE SHEETS IS BASED ON LIMITED INVESTIGATIONS BY THE STATE AND IS IN NO WAY WARRANTED TO INDICATE THE CONDITIONS OF ACTUAL QUANTITIES OF WORK WHICH WILL BE REQUIRED.

Plotted Date: 1/2/2013

DESIGNER/DRAFTER: BU
CHECKED BY: JCM
SCALE AS NOTED

STATE OF CONNECTICUT
DEPARTMENT OF TRANSPORTATION

Filename: ...\SB_MSH_BR01275_S24_FRAMING_PLAN.dgn

SIGNATURE/BLOCK:
OFFICE OF ENGINEERING
APPROVED BY:

PROJECT TITLE:
BEAM END AND BEARING REPAIRS IN DISTRICT 1

TOWN: ENFIELD
DRAWING TITLE: BRIDGE NO. 01275 FRAMING PLAN

PROJECT NO. 171-359
DRAWING NO. S-24
SHEET NO. 03.24

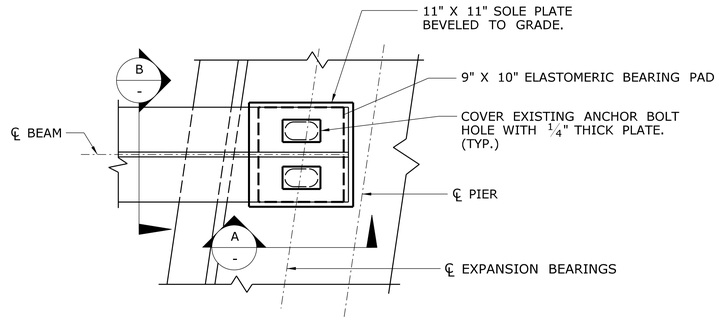

PLAN

SCALE: 1½"=1'-0"

BEAM REACTIONS (KIPS)			
MARK NO.	D.L.	S.D.L.	LL + I
1A - 1G	22	6	65
2A - 2G 3A - 3G	36	9	78

BEAM REACTION NOTES:

1. THE GIRDER REACTIONS HAVE BEEN PROVIDED FOR INFORMATION ONLY AND MAY BE USED TO DEVELOP DETAILS FOR JACKING THE SUPERSTRUCTURE.
2. THE DEAD LOAD REACTIONS ARE DUE TO THE STRUCTURAL STEEL AND CONCRETE SLAB.
3. THE SUPERIMPOSED DEAD LOAD REACTIONS ARE DUE TO THE PARAPETS AND BITUMINOUS CONCRETE OVERLAY.

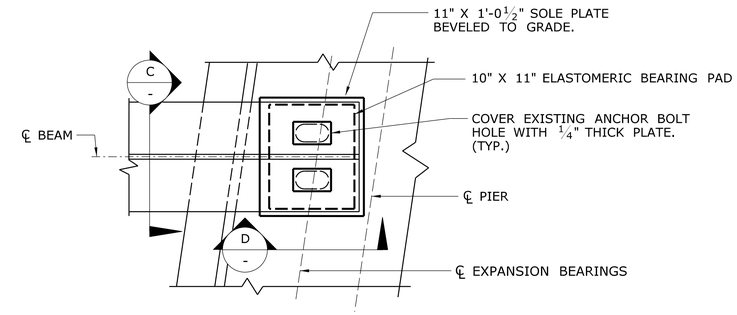

PLAN

SCALE: 1½"=1'-0"

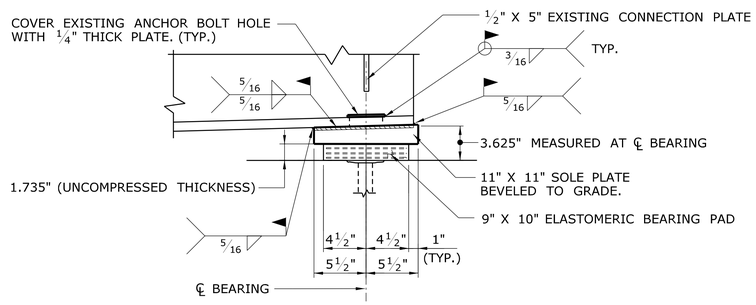

SECTION A

SCALE: 1½"=1'-0"

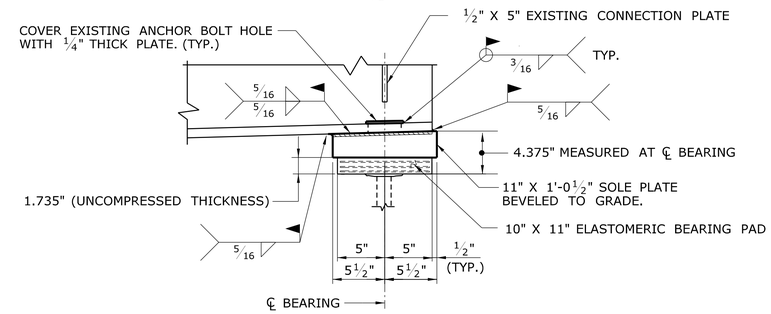

SECTION D

SCALE: 1½"=1'-0"

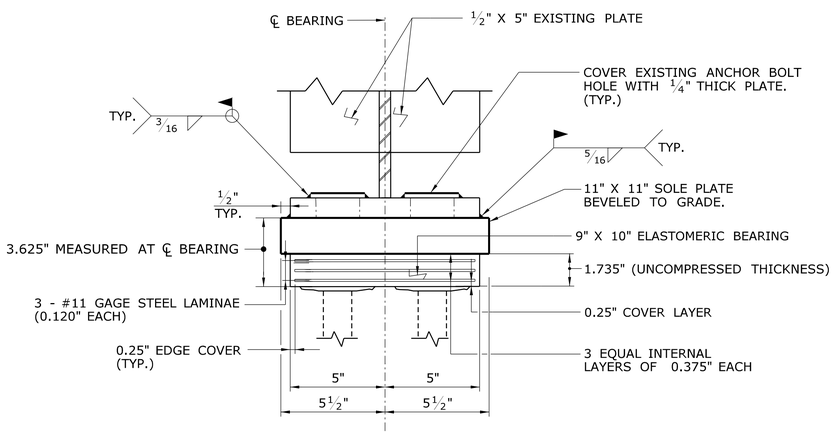

SECTION B

SCALE: 3"=1'-0"

PROPOSED EXPANSION BEARING DETAILS AT PIER NO. 1

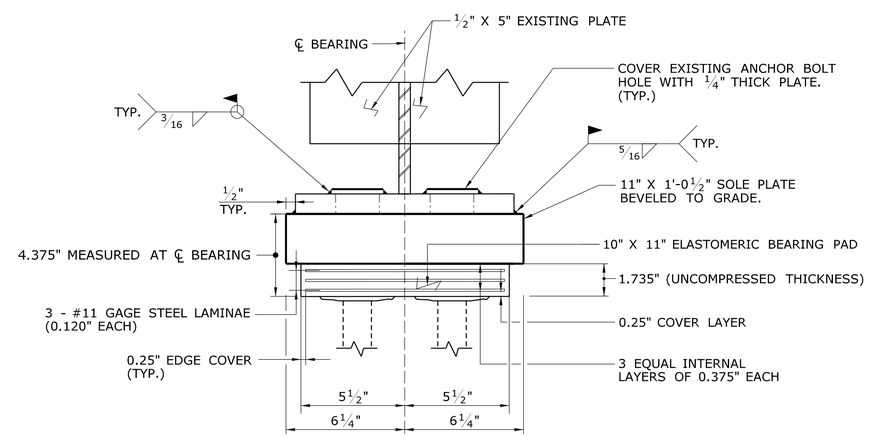

SECTION C

SCALE: 3"=1'-0"

PROPOSED EXPANSION BEARING DETAILS AT PIER NOS. 2 & 3

NOTES:
WORK INVOLVING JACKING THE EXISTING SUPERSTRUCTURE TO BE PAID FOR UNDER THE ITEM "JACKING FOR BEARING REPLACEMENT".
WORK INVOLVING THE REMOVAL OF THE EXISTING BEARING TO BE PAID FOR UNDER THE ITEM "BEARING REPLACEMENT WITH ELASTOMERIC BEARING PADS".
FOR ADDITIONAL NOTES SEE "EXPANSION BEARING NOTES" ON DRAWING NO. S-2.

REV.	DATE	REVISION DESCRIPTION	SHEET NO.
-	-	-	-
-	-	-	-
-	-	-	-
-	-	-	-
-	-	-	-
-	-	-	-

THE INFORMATION, INCLUDING ESTIMATED QUANTITIES OF WORK, SHOWN ON THESE SHEETS IS BASED ON LIMITED INVESTIGATIONS BY THE STATE AND IS IN NO WAY WARRANTED TO INDICATE THE CONDITIONS OF ACTUAL QUANTITIES OF WORK WHICH WILL BE REQUIRED.

Plotted Date: 1/2/2013

DESIGNER/DRAFTER: BU
CHECKED BY: JCM
SCALE AS NOTED

STATE OF CONNECTICUT
DEPARTMENT OF TRANSPORTATION

Filename: ...\SB_MSH_BR01275_S25_PROPOSED_BEARING_DETAILS.dgn

SIGNATURE/BLOCK:
OFFICE OF ENGINEERING
APPROVED BY:

PROJECT TITLE:
BEAM END
AND BEARING REPAIRS
IN DISTRICT 1

TOWN: ENFIELD
PROJECT NO. 171-359
DRAWING TITLE: BRIDGE NO. 01275
PROPOSED BEARING
DETAILS
DRAWING NO. S-25
SHEET NO. 03.25

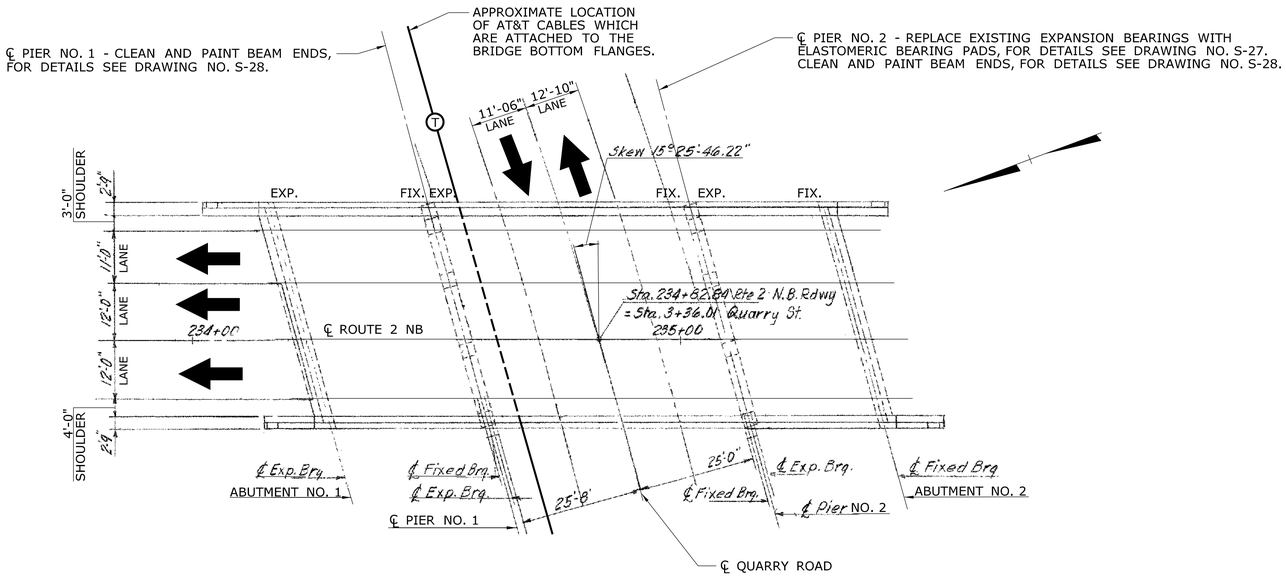

PLAN - BRIDGE NO. 01702, RT. 2 WESTBOUND OVER QUARRY ROAD, GLASTONBURY

SCALE: 1" = 20'

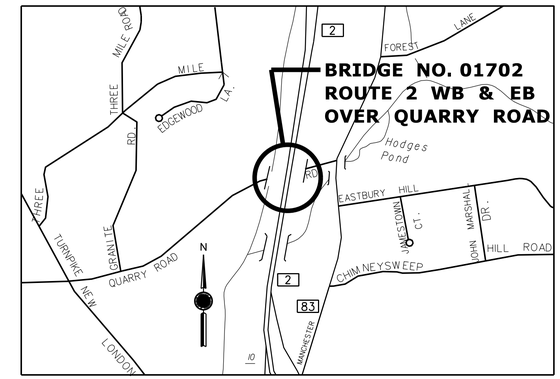

LOCATION PLAN

SCALE
0 1000 FT

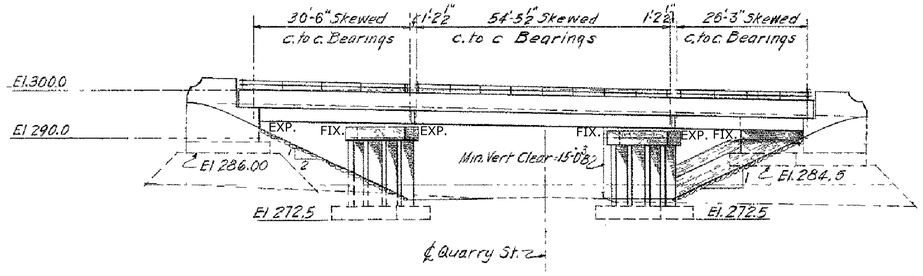

ELEVATION

SCALE: 1/16" = 1'

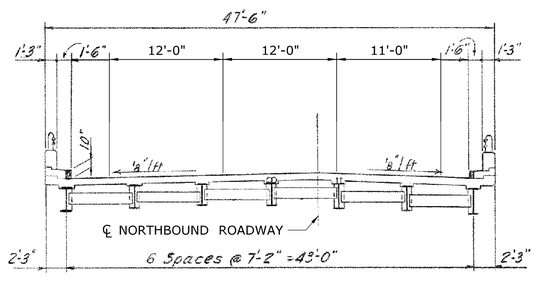

TYPICAL BRIDGE CROSS SECTION

SCALE: 1/8" = 1'

REV.	DATE	REVISION DESCRIPTION	SHEET NO.
-	-	-	-
-	-	-	-
-	-	-	-
-	-	-	-
-	-	-	-
-	-	-	-
-	-	-	-

THE INFORMATION, INCLUDING ESTIMATED QUANTITIES OF WORK, SHOWN ON THESE SHEETS IS BASED ON LIMITED INVESTIGATIONS BY THE STATE AND IS IN NO WAY WARRANTED TO INDICATE THE CONDITIONS OF ACTUAL QUANTITIES OF WORK WHICH WILL BE REQUIRED.

Plotted Date: 1/2/2013

DESIGNER/DRAFTER: BU
CHECKED BY: JCM
SCALE AS NOTED

STATE OF CONNECTICUT
DEPARTMENT OF TRANSPORTATION

Filename: ...\SB_MSH_BR01702_S26_GENERAL_PLAN.dgn

SIGNATURE/ BLOCK:
OFFICE OF ENGINEERING
APPROVED BY:

PROJECT TITLE:
BEAM END AND BEARING REPAIRS IN DISTRICT 1

TOWN: GLASTONBURY
DRAWING TITLE: BRIDGE NO. 01702 GENERAL PLAN

PROJECT NO. 171-359
DRAWING NO. S-26
SHEET NO. 03.26

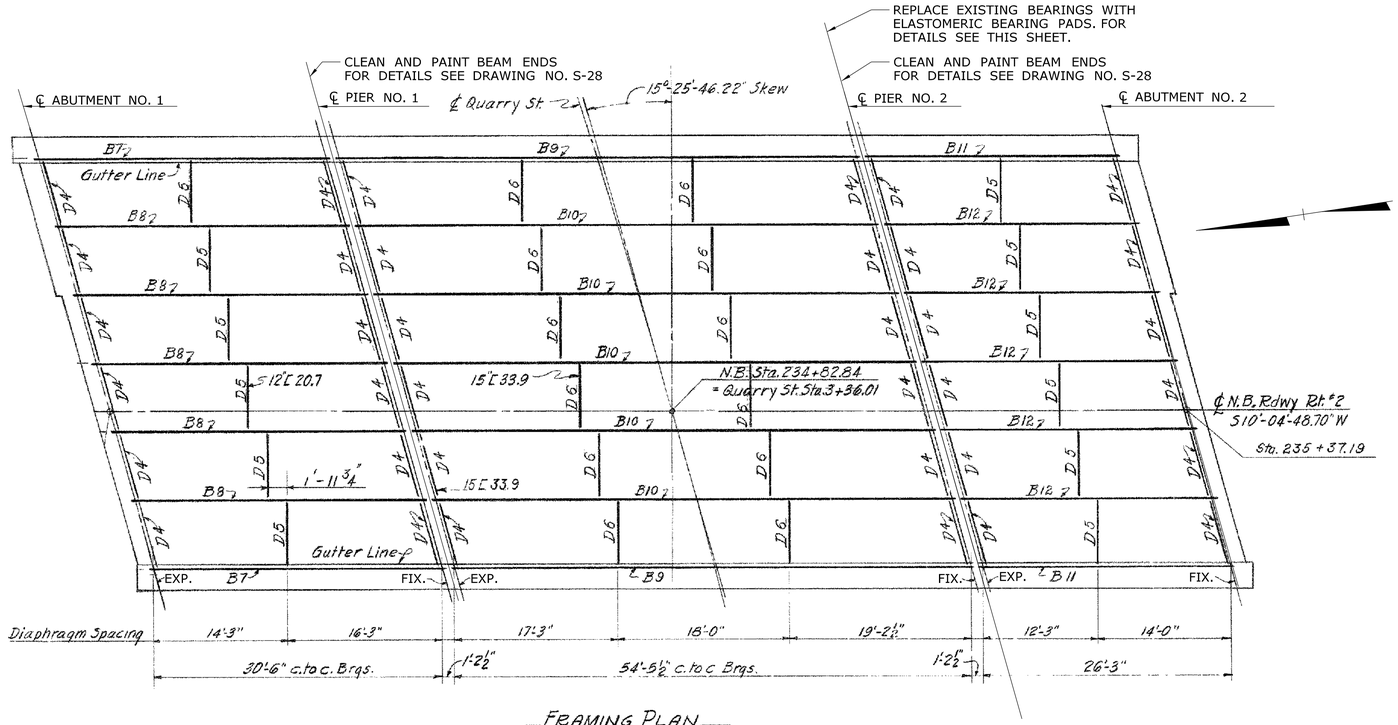

FRAMING PLAN
Scale: 1/8"=1'-0"

BEAM SCHEDULE	
B7 & B9	W30 X 108
B10 & B11	
B8	W27 X 94
B12	W24 X 84

BEAM REACTIONS (KIPS)			
MARK NO.	D.L.	S.D.L.	LL + I
B11 & B12	16	5	54

BEAM REACTION NOTES:

1. THE GIRDER REACTIONS HAVE BEEN PROVIDED FOR INFORMATION ONLY AND MAY BE USED TO DEVELOP DETAILS FOR JACKING THE SUPERSTRUCTURE.
2. THE DEAD LOAD REACTIONS ARE DUE TO THE STRUCTURAL STEEL AND CONCRETE SLAB.
3. THE SUPERIMPOSED DEAD LOAD REACTIONS ARE DUE TO THE PARAPETS AND BITUMINOUS CONCRETE OVERLAY.

EXISTING STRUCTURAL STEEL MATERIAL DESIGNATIONS:

MASONRY PLATES: ASTM A 242
STRUCTURAL STEEL: ASTM A 36

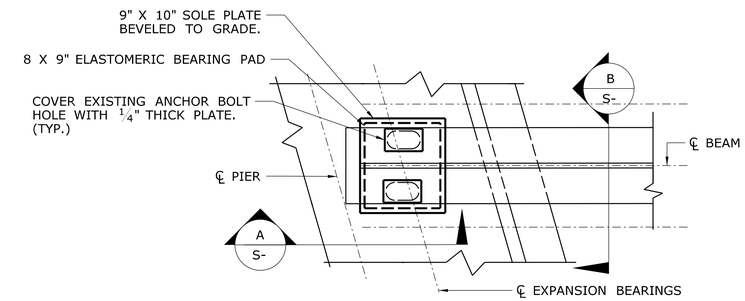

PLAN
SCALE: 1 1/2"=1'-0"

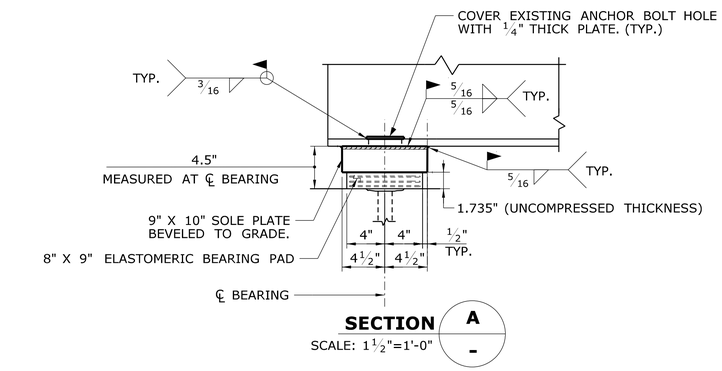

SECTION
SCALE: 1 1/2"=1'-0"

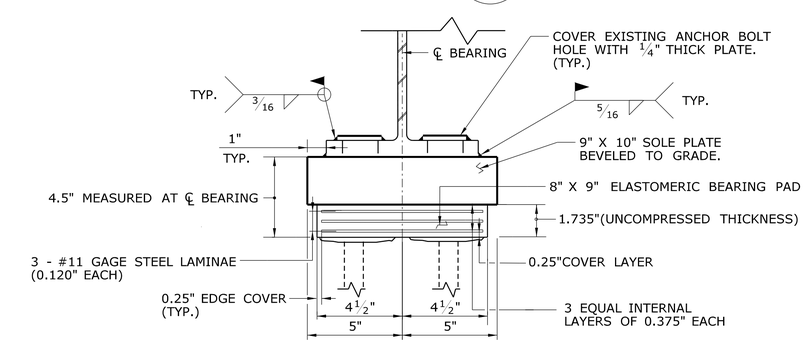

SECTION
SCALE: 3"=1'-0"

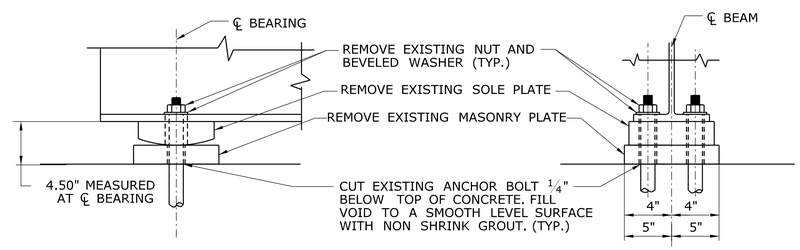

SIDE ELEVATION

END ELEVATION

EXISTING EXPANSION BEARINGS
Scale: 1 1/2" = 1'-0"

PROPOSED EXPANSION BEARING DETAILS FOR BEAM B11 & B12

NOTES:
WORK INVOLVING JACKING THE EXISTING SUPERSTRUCTURE TO BE PAID FOR UNDER THE ITEM "JACKING FOR BEARING REPLACEMENT".
WORK INVOLVING THE REMOVAL OF THE EXISTING BEARING TO BE PAID FOR UNDER THE ITEM "BEARING REPLACEMENT WITH ELASTOMERIC BEARING PADS".
FOR ADDITIONAL NOTES SEE "EXPANSION BEARING NOTES" ON DRAWING NO. S-2.

REV.	DATE	REVISION DESCRIPTION	SHEET NO.
-	-	-	-
-	-	-	-
-	-	-	-
-	-	-	-
-	-	-	-
-	-	-	-

THE INFORMATION, INCLUDING ESTIMATED QUANTITIES OF WORK, SHOWN ON THESE SHEETS IS BASED ON LIMITED INVESTIGATIONS BY THE STATE AND IS IN NO WAY WARRANTED TO INDICATE THE CONDITIONS OF ACTUAL QUANTITIES OF WORK WHICH WILL BE REQUIRED.

Plotted Date: 1/2/2013

DESIGNER/DRAFTER: BU
CHECKED BY: JCM
SCALE AS NOTED

STATE OF CONNECTICUT
DEPARTMENT OF TRANSPORTATION

Filename: ...\SB_MSH_BR01702_S27_FRAMING_PLAN AND PROPOSED BEARING DETAILS.c

SIGNATURE/BLOCK:
OFFICE OF ENGINEERING
APPROVED BY:

PROJECT TITLE:
BEAM END AND BEARING REPAIRS DISTRICT 1

TOWN: GLASTONBURY
DRAWING TITLE: BRIDGE NO. 01702 FRAMING PLAN AND PROPOSED BEARING DETAILS

PROJECT NO. 171-359
DRAWING NO. S-27
SHEET NO. 03.27

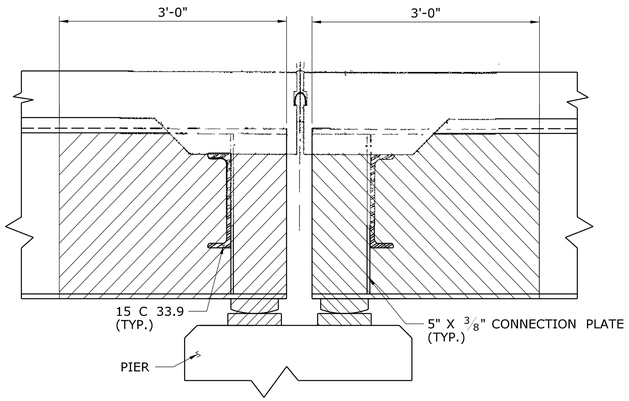

TYPICAL BEAM END AT PIER VIEW

SCALE: 1" = 1'-0"

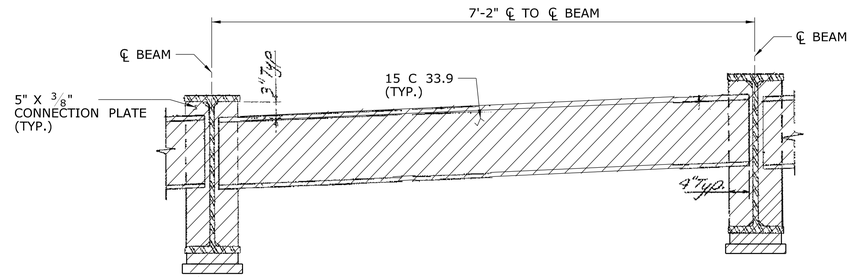

TYPICAL BAY VIEW

SCALE: 3/4" = 1'-0"

LIMITS OF CLEANING AND PAINTING BEAM ENDS

DENOTES LIMITS OF CLEANING AND PAINTING OF BEAM ENDS AND BEARINGS. THIS WORK TO BE INCLUDED FOR PAYMENT UNDER THE ITEM "LOCALIZED PAINT REMOVAL AND FIELD PAINTING OF EXISTING STEEL (SITE NO. 6)".

NOTE: THESE DETAILS ARE FOR INFORMATION ONLY.

FOR NOTES SEE "PAINTING NOTES" ON DRAWING NO. S-2.

REV.	DATE	REVISION DESCRIPTION	SHEET NO.
-	-	-	-
-	-	-	-
-	-	-	-
-	-	-	-
-	-	-	-
-	-	-	-

THE INFORMATION, INCLUDING ESTIMATED QUANTITIES OF WORK, SHOWN ON THESE SHEETS IS BASED ON LIMITED INVESTIGATIONS BY THE STATE AND IS IN NO WAY WARRANTED TO INDICATE THE CONDITIONS OF ACTUAL QUANTITIES OF WORK WHICH WILL BE REQUIRED.

Plotted Date: 1/2/2013

DESIGNER/DRAFTER: **BU**

CHECKED BY: **JCM**

SCALE AS NOTED

STATE OF CONNECTICUT
DEPARTMENT OF TRANSPORTATION

Filename: ...\SB_MSH_BR01702_S28_CLEAN_AND_PAINT_ DETAILS.dgn

SIGNATURE/ BLOCK:

OFFICE OF ENGINEERING

APPROVED BY:

PROJECT TITLE:

BEAM END AND BEARING REPAIRS IN DISTRICT 1

TOWN: **GLASTONBURY**

DRAWING TITLE: **BRIDGE NO. 01702 CLEAN AND PAINT DETAILS**

PROJECT NO. **171-359**

DRAWING NO. **S-28**

SHEET NO. 03.28

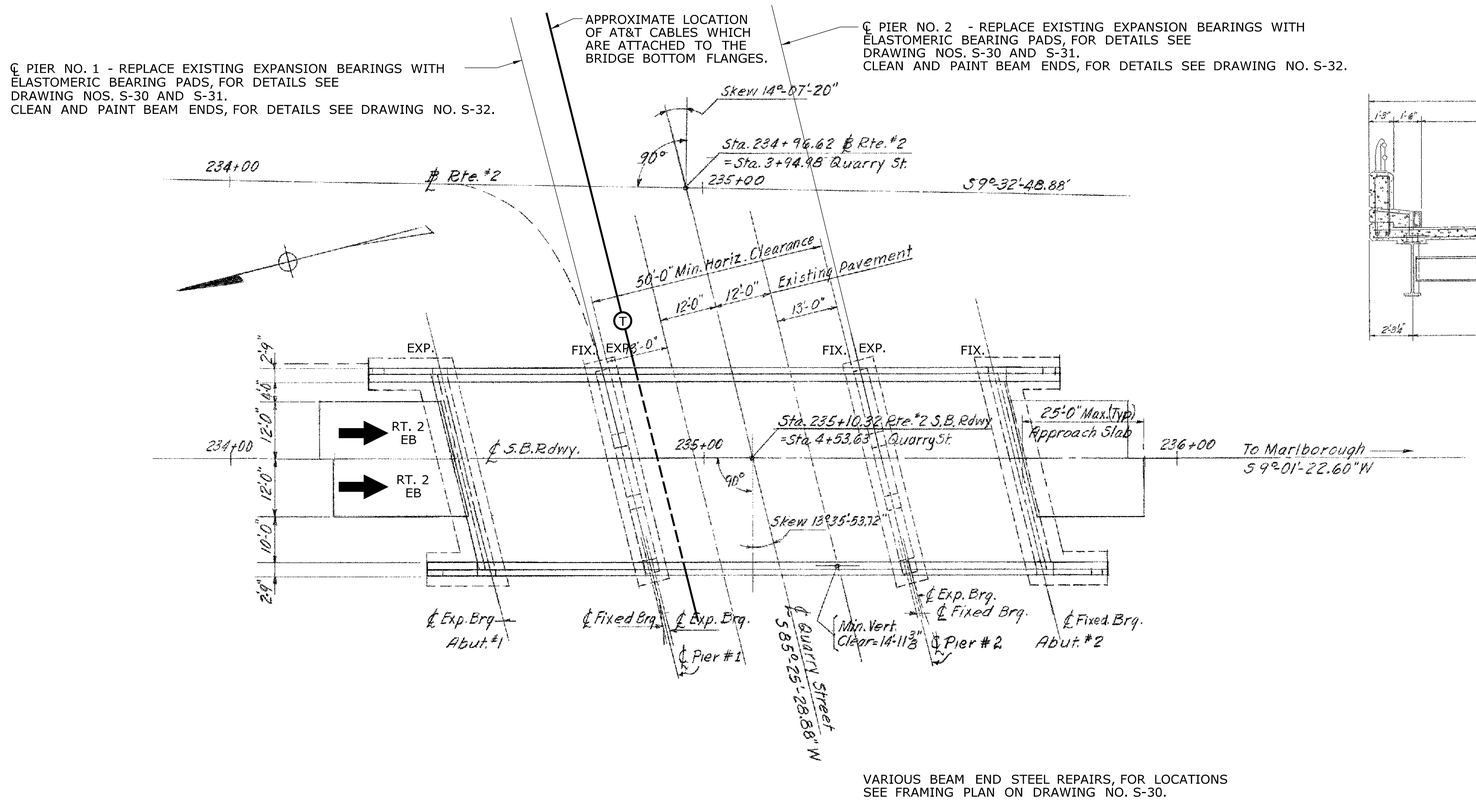

VARIOUS BEAM END STEEL REPAIRS, FOR LOCATIONS SEE FRAMING PLAN ON DRAWING NO. S-30.

GENERAL PLAN - BRIDGE NO. 01703, RT. 2 EB OVER QUARRY RD.

SCALE: 1/16" = 1'-0"

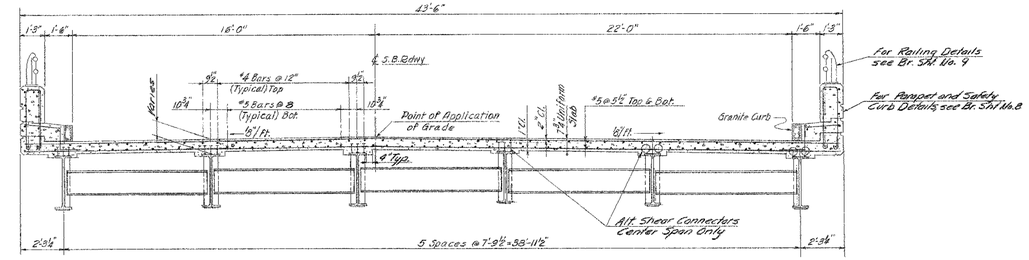

TYPICAL CROSS SECTION

SCALE: 3/8" = 1'-0"

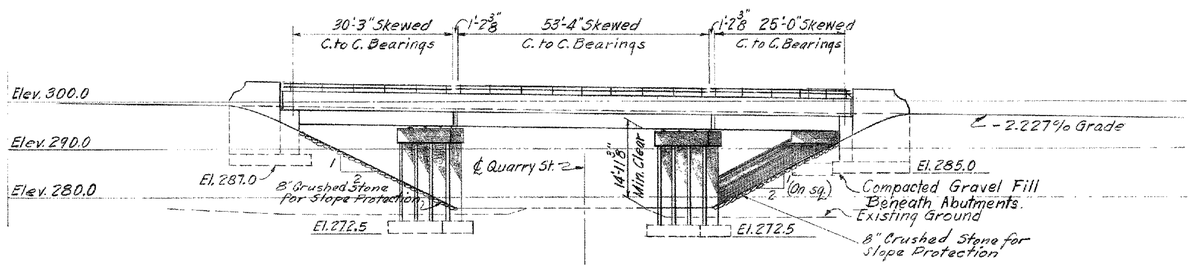

ELEVATION

SCALE: 1/16" = 1'-0"

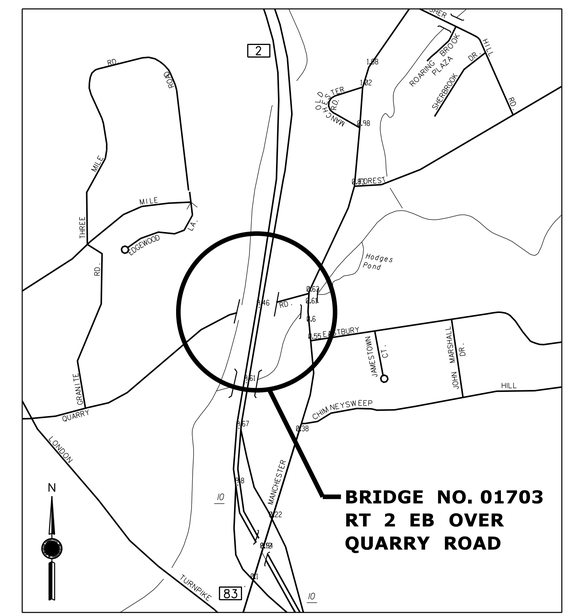

LOCATION PLAN

SCALE 0 1000 FT

REV.	DATE	REVISION DESCRIPTION	SHEET NO.
-	-	-	-
-	-	-	-
-	-	-	-
-	-	-	-
-	-	-	-
-	-	-	-

THE INFORMATION, INCLUDING ESTIMATED QUANTITIES OF WORK, SHOWN ON THESE SHEETS IS BASED ON LIMITED INVESTIGATIONS BY THE STATE AND IS IN NO WAY WARRANTED TO INDICATE THE CONDITIONS OF ACTUAL QUANTITIES OF WORK WHICH WILL BE REQUIRED.

Plotted Date: 1/2/2013

DESIGNER/DRAFTER: TDC
CHECKED BY: JCM
SCALE AS NOTED

STATE OF CONNECTICUT
DEPARTMENT OF TRANSPORTATION

Filename: ...\SB_MSH_BR01703_S29_GENERAL_PLAN.dgn

SIGNATURE/BLOCK: OFFICE OF ENGINEERING
APPROVED BY:

PROJECT TITLE: BEAM END AND BEARING REPAIRS IN DISTRICT 1

TOWN: GLASTONBURY
DRAWING TITLE: BRIDGE NO. 01703 GENERAL PLAN

PROJECT NO. 171-359
DRAWING NO. S-29
SHEET NO. 03.29

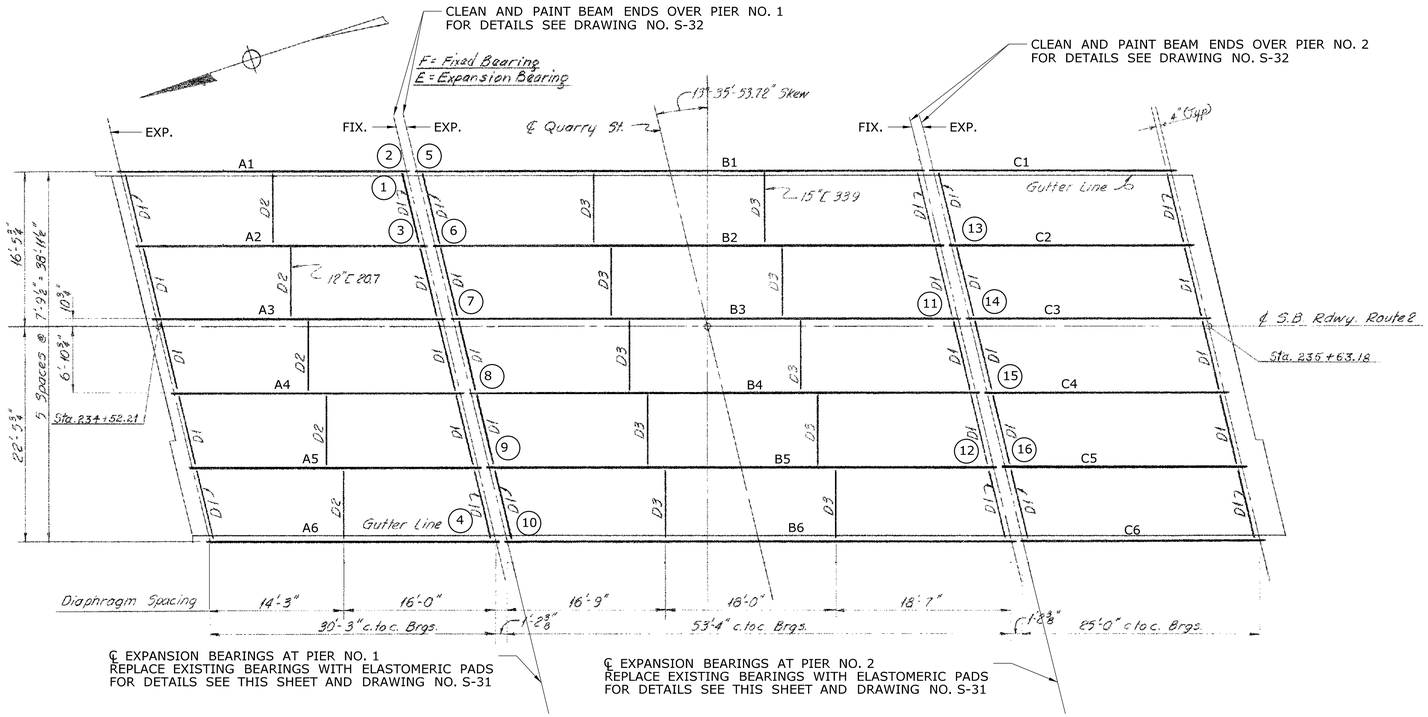

PLAN - SITE NO. 7 BRIDGE NO. 01703, RT. 2 EB OVER QUARRY RD.

SCALE: 1/8" = 1'-0"

BEAM SCHEDULE	
A1 & A6	33 X 130
A2 TO A5	27 X 102
B1 TO B6	33 X 130
C1 & C6	33 X 130
C2 TO C5	24 X 84

EXISTING STRUCTURAL STEEL MATERIAL DESIGNATIONS:

MASONRY PLATES: ASTM A 242
STRUCTURAL STEEL: ASTM A 36

BEAM REACTIONS (KIPS)			
MARK NO.	D.L.	S.D.L.	LL + I
B1 TO B6	38	14	77
C1 TO C6	16	5	56

BEAM REACTION NOTES:

1. THE GIRDER REACTIONS HAVE BEEN PROVIDED FOR INFORMATION ONLY AND MAY BE USED TO DEVELOP DETAILS FOR JACKING THE SUPERSTRUCTURE.
2. THE DEAD LOAD REACTIONS ARE DUE TO THE STRUCTURAL STEEL AND CONCRETE SLAB.
3. THE SUPERIMPOSED DEAD LOAD REACTIONS ARE DUE TO THE PARAPETS AND BITUMINOUS CONCRETE OVERLAY.

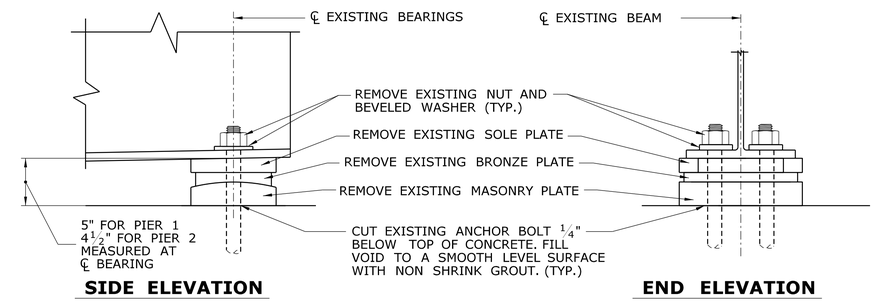

EXISTING EXPANSION BEARING DETAILS AT PIERS

SCALE: 1 1/2" =1'-0"

FOR NOTES SEE "ELASTOMERIC BEARING NOTES" ON DRAWING NO. S-2.

LOCATION SYMBOL	DESCRIPTION OF WORK: REPAIR SECTION LOSS	REPAIR AREA
1	REPAIR SECTION LOSS ON TOP OF WEB - BEAM A1 IN SPAN NO. 1 AT PIER NO. 1	8"H X 3"L X 1/8"DP
1	REPAIR SECTION LOSS ON BOTTOM OF WEB - BEAM A1 IN SPAN NO. 1 AT PIER NO. 1	6"H X 3"L X 1/4"DP
1	REPAIR SECTION LOSS ON BOTTOM OF WEB - BEAM A1 IN SPAN NO. 1 AT PIER NO. 1	12"H X 4"L X 1/4"DP
2	REPAIR HEAVILY RUSTED ANCHOR BOLTS WITH SEVERE SECTION LOSS - BEAM A1 IN SPAN 1 AT PIER NO. 1	N/A
3	REPAIR SECTION LOSS ON BOTTOM OF WEB - BEAM A2 IN SPAN NO. 1 AT PIER NO. 1	3/8"DP
4	REPAIR SECTION LOSS AT WEB END - BEAM A6 IN SPAN NO. 1 AT PIER NO. 1	3/16 "DP
4	REPAIR HEAVILY RUSTED ANCHOR BOLTS WITH SEVERE SECTION LOSS- BEAM A6 IN SPAN NO. 1 AT PIER NO. 1	N/A
5	REPAIR HEAVILY RUSTED ANCHOR BOLTS WITH SEVERE SECTION LOSS - BEAM B1 IN SPAN NO. 2 AT PIER NO. 1	N/A
6	REPAIR HEAVILY RUSTED ANCHOR BOLTS WITH SEVERE SECTION LOSS - BEAM B2 IN SPAN NO. 2 AT PIER NO. 1	N/A
6	REPAIR SECTION LOSS ON TOP OF WEB - BEAM B2 IN SPAN NO. 2 AT PIER NO. 1	8"H X 5/16 "DP
7	REPAIR SECTION LOSS ON BOTTOM OF WEB - BEAM B3 IN SPAN NO. 2 AT PIER NO. 1	10"H X 3/8"DP
7	REPAIR SECTION LOSS AT WEB END - BEAM B3 IN SPAN NO. 2 AT PIER NO. 1	6"H X 1/4"DP
7	REPAIR SECTION LOSS ON TOP OF WEB - BEAM B3 IN SPAN NO. 2 AT PIER NO. 1	10"H X 1/4"DP
8	REPAIR SECTION LOSS AT WEB END - BEAM B4 IN SPAN NO. 2 AT PIER NO. 1	1/4"DP
9	REPAIR SECTION LOSS AT WEB END - BEAM B5 IN SPAN NO. 2 AT PIER NO. 1	1/4"DP
10	REPAIR SECTION LOSS AT BOTTOM OF WEB - BEAM B6 IN SPAN NO. 2 AT PIER NO. 1	5"H X 15"L X 1/4"DP
11	REPAIR SECTION LOSS AT WEB END - BEAM B3 IN SPAN NO. 2 AT PIER NO. 2	12"H X 10"L X 1/4"DP
12	REPAIR HEAVILY RUSTED ANCHOR BOLTS WITH SEVERE SECTION LOSS - BEAM B5 IN SPAN NO. 2 AT PIER NO. 2	N/A
13	REPAIR SECTION LOSS ON TOP OF WEB END - BEAM C2 IN SPAN NO. 3 AT PIER NO. 2	5"H X 3/16 "DP
13	REPAIR HEAVILY RUSTED ANCHOR BOLTS WITH SEVERE SECTION LOSS - BEAM C2 IN SPAN NO. 3 AT PIER NO. 2	N/A
14	REPAIR HEAVILY RUSTED ANCHOR BOLTS WITH SEVERE SECTION LOSS - BEAM C3 IN SPAN NO. 3 AT PIER NO. 2	N/A
14	REPAIR SECTION LOSS AT WEB END - BEAM C3 IN SPAN NO. 3 AT PIER NO. 2	1/8"DP
15	REPAIR SECTION LOSS ON TOP OF WEB END - BEAM C4 IN SPAN NO. 3 AT PIER NO. 2	5"H X 1/8"DP
16	REPAIR SECTION LOSS AT WEB END - BEAM C5 IN SPAN NO. 3 AT PIER NO. 2	6"H X 4" X 1/8"DP

FOR STRUCTURAL STEEL REPAIR DETAILS SEE DRAWING NOS. S-3 THROUGH S-5 AND
FOR ANCHOR BOLT REPAIR DETAILS SEE DRAWING NO. S-6.

REV.	DATE	REVISION DESCRIPTION	SHEET NO.
-	-	-	-
-	-	-	-
-	-	-	-
-	-	-	-
-	-	-	-
-	-	-	-

THE INFORMATION, INCLUDING ESTIMATED QUANTITIES OF WORK, SHOWN ON THESE SHEETS IS BASED ON LIMITED INVESTIGATIONS BY THE STATE AND IS IN NO WAY WARRANTED TO INDICATE THE CONDITIONS OF ACTUAL QUANTITIES OF WORK WHICH WILL BE REQUIRED.

Plotted Date: 1/2/2013

DESIGNER/DRAFTER: TDC
CHECKED BY: JCM
SCALE AS NOTED

STATE OF CONNECTICUT
DEPARTMENT OF TRANSPORTATION

Filename: ...\SB_MSH_BR01703_S30_FRAMING_PLAN_AND_BEARING_DETAILS.dgn

SIGNATURE/BLOCK:
OFFICE OF ENGINEERING
APPROVED BY:

PROJECT TITLE:
BEAM END AND BEARING REPAIRS IN DISTRICT 1

TOWN: GLASTONBURY
DRAWING TITLE: BRIDGE NO. 01703 FRAMING PLAN AND BEARING DETAILS

PROJECT NO. 171-359
DRAWING NO. S-30
SHEET NO. 03.30

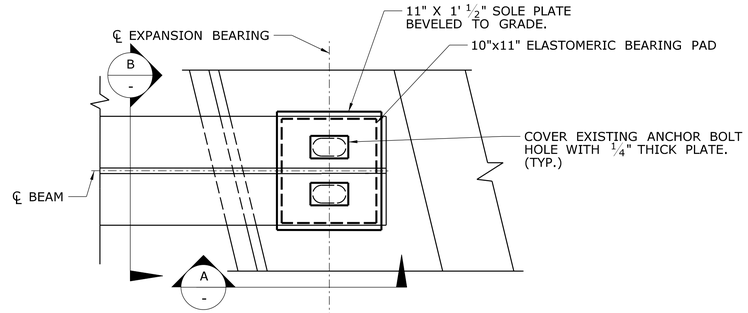

PLAN

SCALE: 1 1/2"=1'-0"

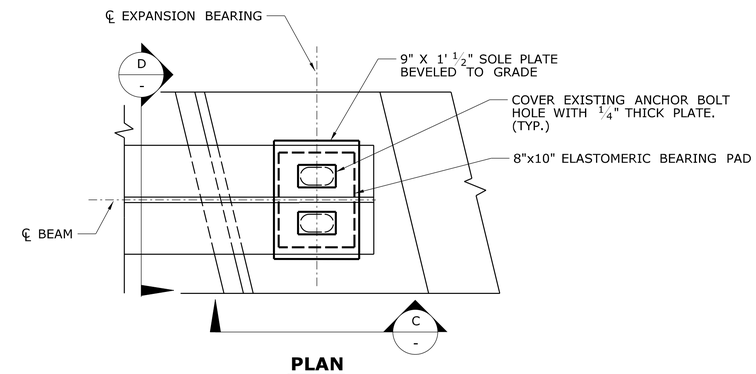

PLAN

SCALE: 1 1/2"=1'-0"

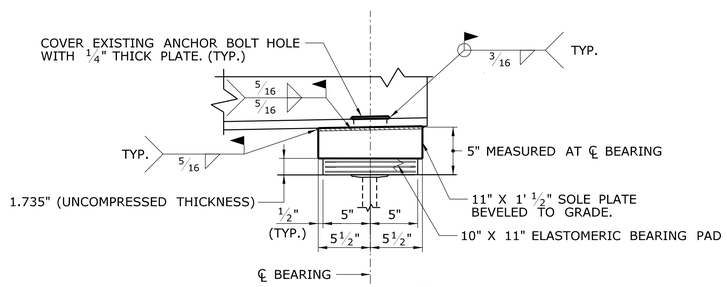

SECTION A

SCALE: 1 1/2"=1'-0"

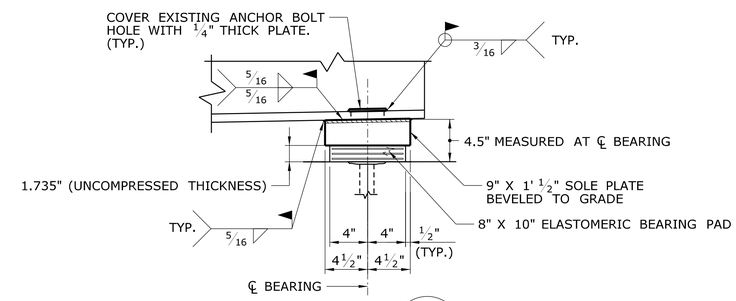

SECTION C

SCALE: 1 1/2"=1'-0"

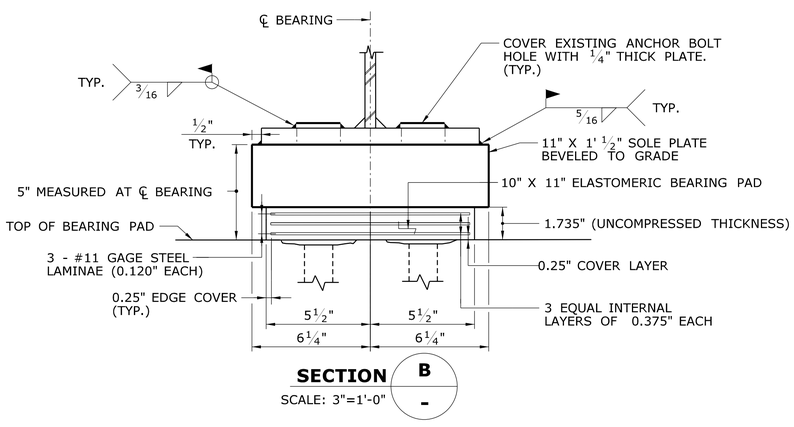

SECTION B

SCALE: 3"=1'-0"

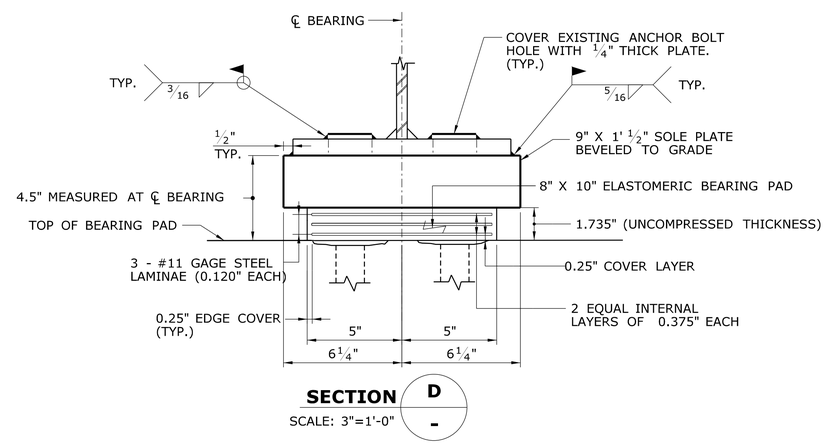

SECTION D

SCALE: 3"=1'-0"

PROPOSED ELASTOMERIC EXPANSION BEARING AT PIER NO. 1

PROPOSED ELASTOMERIC EXPANSION BEARING AT PIER NO. 2

NOTES:
WORK INVOLVING JACKING THE EXISTING SUPERSTRUCTURE TO BE PAID FOR UNDER THE ITEM "JACKING FOR BEARING REPLACEMENT".
WORK INVOLVING THE REMOVAL OF THE EXISTING BEARING TO BE PAID FOR UNDER THE ITEM "BEARING REPLACEMENT WITH ELASTOMERIC BEARING PADS".
FOR ADDITIONAL NOTES SEE "EXPANSION BEARING NOTES" ON DRAWING NO. S-2.

REV.	DATE	REVISION DESCRIPTION	SHEET NO.
-	-	-	-
-	-	-	-
-	-	-	-
-	-	-	-
-	-	-	-
-	-	-	-

THE INFORMATION, INCLUDING ESTIMATED QUANTITIES OF WORK, SHOWN ON THESE SHEETS IS BASED ON LIMITED INVESTIGATIONS BY THE STATE AND IS IN NO WAY WARRANTED TO INDICATE THE CONDITIONS OF ACTUAL QUANTITIES OF WORK WHICH WILL BE REQUIRED.

Plotted Date: 1/2/2013

DESIGNER/DRAFTER: TDC
CHECKED BY: JCM
SCALE AS NOTED

STATE OF CONNECTICUT
DEPARTMENT OF TRANSPORTATION

Filename: ...\SB_MSH_BR01703_S31_PROPOSED_BEARING_DETAILS.dgn

SIGNATURE/BLOCK:
OFFICE OF ENGINEERING
APPROVED BY:

PROJECT TITLE:
BEAM END AND BEARING REPAIRS IN DISTRICT 1

TOWN: GLASTONBURY
DRAWING TITLE: BRIDGE NO. 01703 PROPOSED BEARING DETAILS

PROJECT NO. 171-359
DRAWING NO. S-31
SHEET NO. 03.31

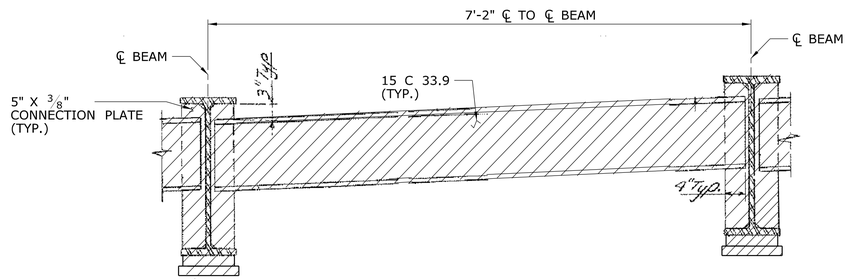

TYPICAL VIEW OF BAY

SCALE: 3/4" = 1'-0"

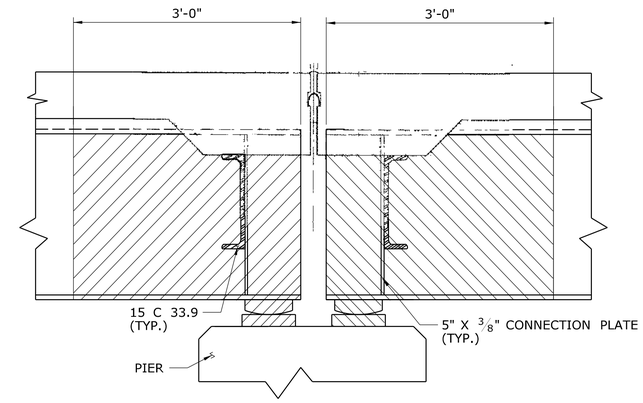

TYPICAL VIEW OF BEAM ENDS AT PIER

SCALE: 1" = 1'-0"

LIMITS OF CLEANING AND PAINTING BEAM ENDS

NOTE: THESE DETAILS ARE FOR INFORMATION ONLY.

DENOTES LIMITS OF CLEANING AND PAINTING OF BEAM ENDS AND BEARINGS. THIS WORK TO BE INCLUDED FOR PAYMENT UNDER THE ITEM "LOCALIZED PAINT REMOVAL AND FIELD PAINTING OF EXISTING STEEL (SITE NO. 7)".

FOR NOTES SEE "PAINTING NOTES" ON DRAWING NO. S-2.

REV.	DATE	REVISION DESCRIPTION	SHEET NO.
-	-	-	-
-	-	-	-
-	-	-	-
-	-	-	-
-	-	-	-
-	-	-	-

THE INFORMATION, INCLUDING ESTIMATED QUANTITIES OF WORK, SHOWN ON THESE SHEETS IS BASED ON LIMITED INVESTIGATIONS BY THE STATE AND IS IN NO WAY WARRANTED TO INDICATE THE CONDITIONS OF ACTUAL QUANTITIES OF WORK WHICH WILL BE REQUIRED.

Plotted Date: 1/2/2013

DESIGNER/DRAFTER: TDC

CHECKED BY: JCM

SCALE AS NOTED

STATE OF CONNECTICUT
DEPARTMENT OF TRANSPORTATION

Filename: ...\SB_MSH_BR01703_S32_CLEAN_AND_PAINT_DETAILS.dgn

SIGNATURE/ BLOCK:

OFFICE OF ENGINEERING

APPROVED BY:

PROJECT TITLE:

BEAM END
AND BEARING REPAIRS
IN DISTRICT 1

TOWN: GLASTONBURY

DRAWING TITLE: BRIDGE NO. 01703
CLEAN AND PAINT
DETAILS

PROJECT NO. 171-359

DRAWING NO. S-32

SHEET NO. 03.32

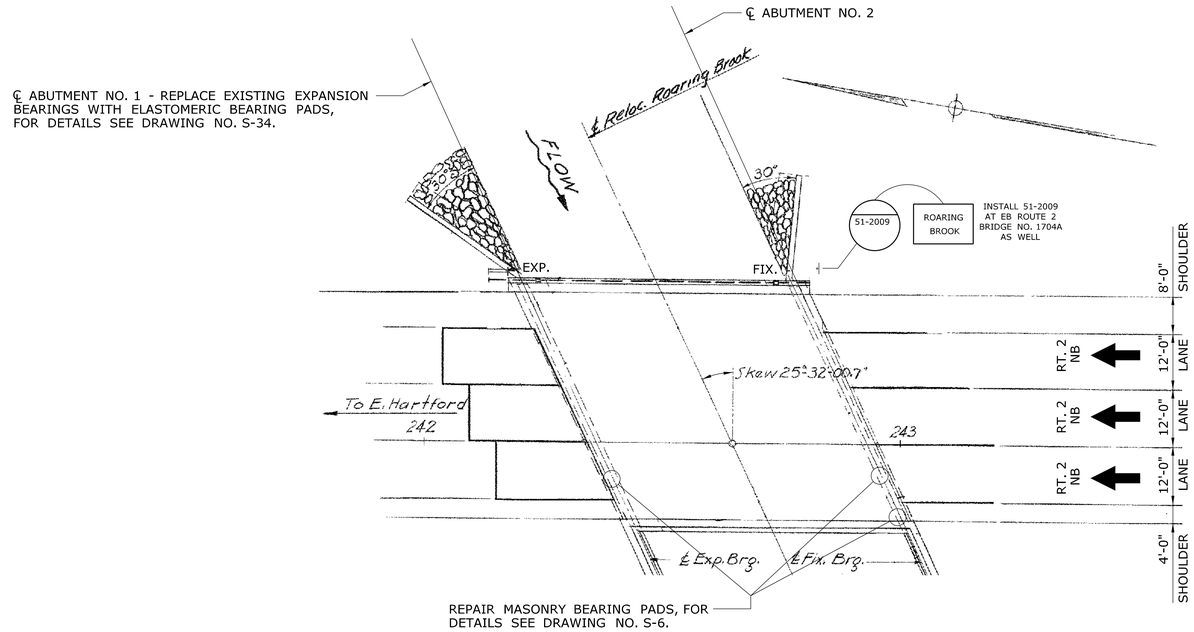

GENERAL PLAN - BRIDGE NO. 01704B, RT. 2 WB OVER ROARING BROOK

SCALE: 1/16" = 1'-0"

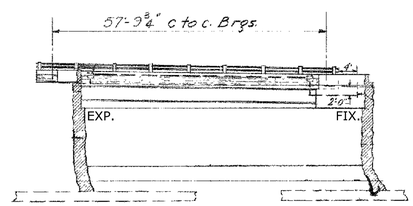

WESTBOUND ELEVATION

SCALE: 1/16" = 1'-0"

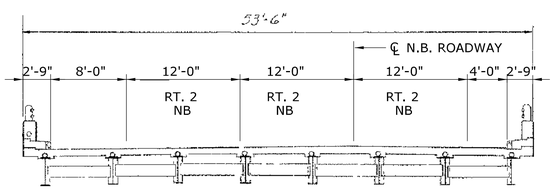

TYPICAL WESTBOUND CROSS SECTION

SCALE: 1/8" = 1'-0"

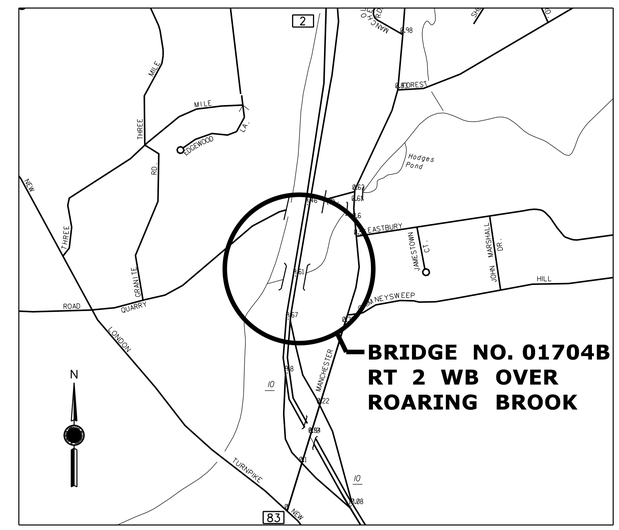

LOCATION PLAN

SCALE
0 1000 FT

NOTE: THE CONTRACTOR IS HEREBY NOTICED THAT ALL CONSTRUCTION ACTIVITIES ASSOCIATED WITH BRIDGE NO. 1704B IS PROHIBITED FROM 12:01 A.M. ON THE MONDAY PRECEDING THE THIRD SATURDAY IN APRIL THROUGH 12:00 A.M. ON THE SUNDAY PRECEDING THE FORTH SATURDAY IN APRIL.

REV.	DATE	REVISION DESCRIPTION	SHEET NO.
-	-	-	-
-	-	-	-
-	-	-	-
-	-	-	-
-	-	-	-
-	-	-	-

THE INFORMATION, INCLUDING ESTIMATED QUANTITIES OF WORK, SHOWN ON THESE SHEETS IS BASED ON LIMITED INVESTIGATIONS BY THE STATE AND IS IN NO WAY WARRANTED TO INDICATE THE CONDITIONS OF ACTUAL QUANTITIES OF WORK WHICH WILL BE REQUIRED.

Plotted Date: 1/2/2013

DESIGNER/DRAFTER: TDC
CHECKED BY: JCM
SCALE AS NOTED

STATE OF CONNECTICUT
DEPARTMENT OF TRANSPORTATION

Filename: ...\SB_MSH_BR01704B_S33_GENERAL_PLAN.dgn

SIGNATURE/BLOCK:
OFFICE OF ENGINEERING
APPROVED BY:

PROJECT TITLE:
BRIDGE BEAM END AND BEARING REPAIR IN DISTRICT 1

TOWN: GLASTONBURY
DRAWING TITLE: BRIDGE NO. 01704B GENERAL PLAN

PROJECT NO. 171-359
DRAWING NO. S-33
SHEET NO. 03.33

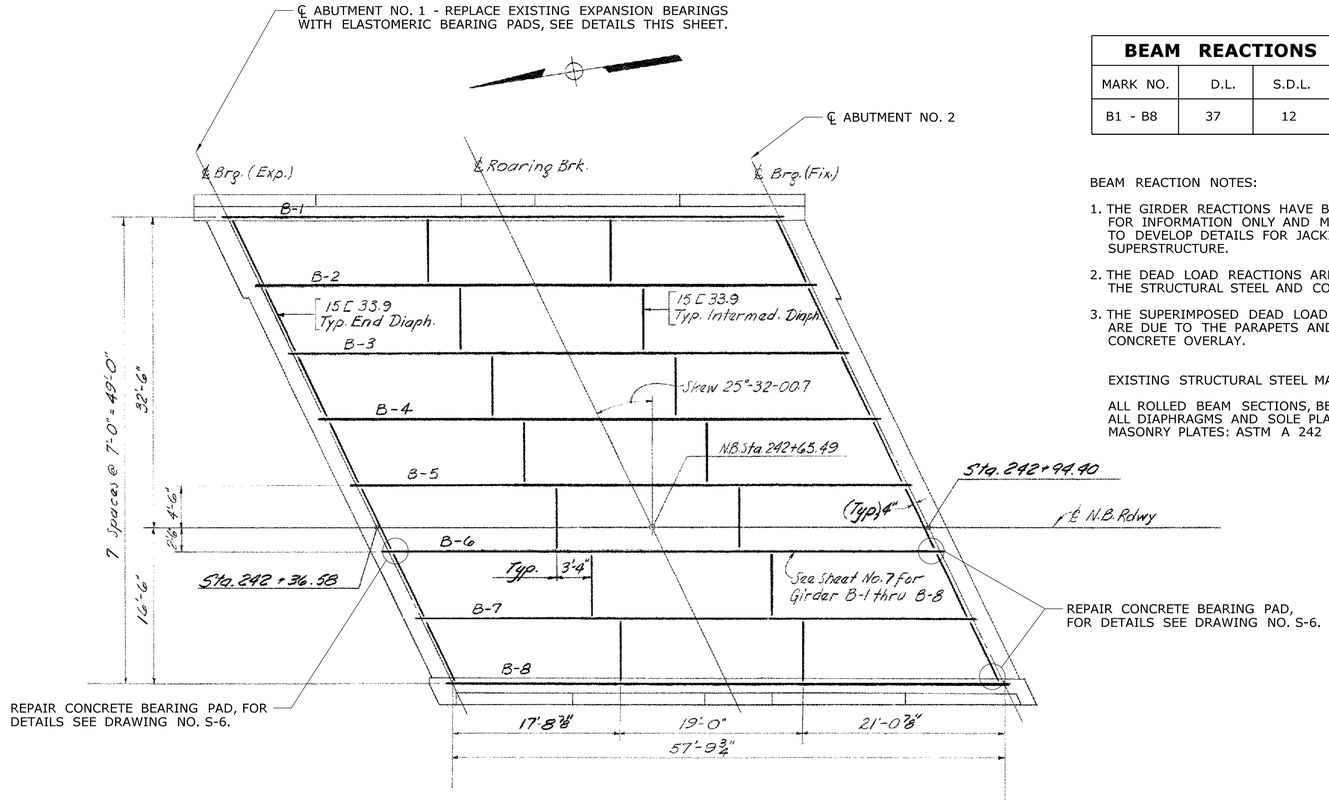

FRAMING PLAN - BRIDGE NO. 01704B, RT. 2 WB OVER ROARING BROOK

SCALE: 1/8" = 1'-0"

BEAM REACTIONS (KIPS)			
MARK NO.	D.L.	S.D.L.	LL + I
B1 - B8	37	12	74

BEAM REACTION NOTES:

1. THE GIRDER REACTIONS HAVE BEEN PROVIDED FOR INFORMATION ONLY AND MAY BE USED TO DEVELOP DETAILS FOR JACKING THE SUPERSTRUCTURE.
2. THE DEAD LOAD REACTIONS ARE DUE TO THE STRUCTURAL STEEL AND CONCRETE SLAB.
3. THE SUPERIMPOSED DEAD LOAD REACTIONS ARE DUE TO THE PARAPETS AND BITUMINOUS CONCRETE OVERLAY.

EXISTING STRUCTURAL STEEL MATERIAL DESIGNATIONS:

ALL ROLLED BEAM SECTIONS, BEAM COVER PLATES AND ALL DIAPHRAGMS AND SOLE PLATES: ASTM A 36
MASONRY PLATES: ASTM A 242

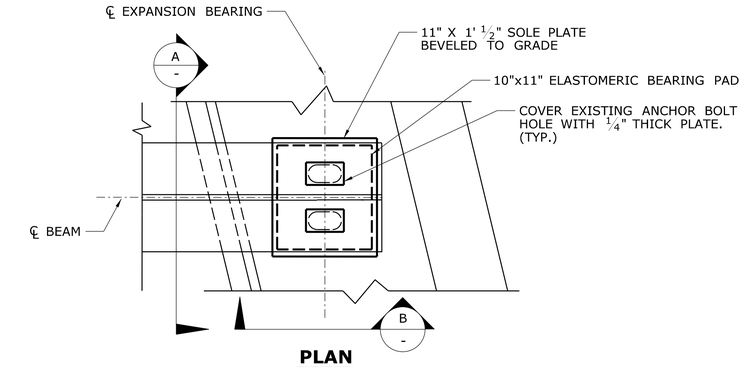

PLAN

SCALE: 1 1/2"=1'-0"

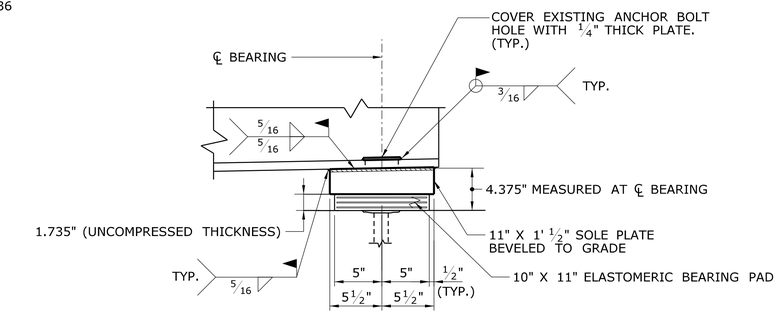

SECTION B

SCALE: 1 1/2"=1'-0"

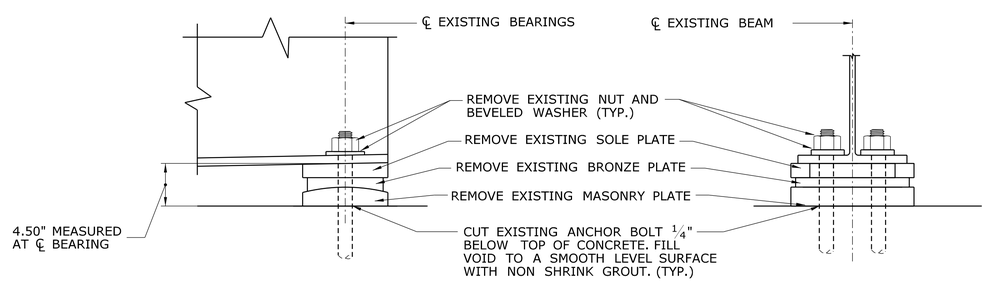

SIDE ELEVATION

END ELEVATION

EXISTING EXPANSION BEARING DETAILS

SCALE: 1 1/2" =1'-0"

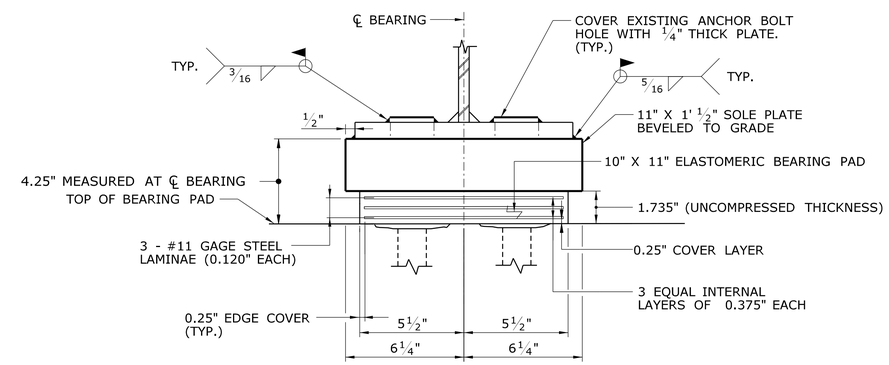

SECTION A

SCALE: 3"=1'-0"

PROPOSED ELASTOMERIC EXPANSION BEARING

NOTES:
WORK INVOLVING JACKING THE EXISTING SUPERSTRUCTURE TO BE PAID FOR UNDER THE ITEM "JACKING FOR BEARING REPLACEMENT".
WORK INVOLVING THE REMOVAL OF THE EXISTING BEARING TO BE PAID FOR UNDER THE ITEM "BEARING REPLACEMENT WITH ELASTOMERIC BEARING PADS".
FOR ADDITIONAL NOTES SEE "EXPANSION BEARING NOTES" ON DRAWING NO. S-2.

REV.	DATE	REVISION DESCRIPTION	SHEET NO.
-	-	-	-
-	-	-	-
-	-	-	-
-	-	-	-
-	-	-	-
-	-	-	-

THE INFORMATION, INCLUDING ESTIMATED QUANTITIES OF WORK, SHOWN ON THESE SHEETS IS BASED ON LIMITED INVESTIGATIONS BY THE STATE AND IS IN NO WAY WARRANTED TO INDICATE THE CONDITIONS OF ACTUAL QUANTITIES OF WORK WHICH WILL BE REQUIRED.

Plotted Date: 1/2/2013

DESIGNER/DRAFTER: TDC
CHECKED BY: JCM
SCALE AS NOTED

STATE OF CONNECTICUT
DEPARTMENT OF TRANSPORTATION

Filename: ...\SB_MSH_BR01704B_S34_FRAMING_PLAN_AND_PROPOSED_BEARING_DETAILS

SIGNATURE/BLOCK: OFFICE OF ENGINEERING
APPROVED BY:

PROJECT TITLE: BRIDGE BEAM END AND BEARING REPAIR IN DISTRICT 1

TOWN: GLASTONBURY
DRAWING TITLE: BRIDGE NO. 01704B FRAMING PLAN AND BEARING DETAILS

PROJECT NO. 171-359
DRAWING NO. S-34
SHEET NO. 03.34

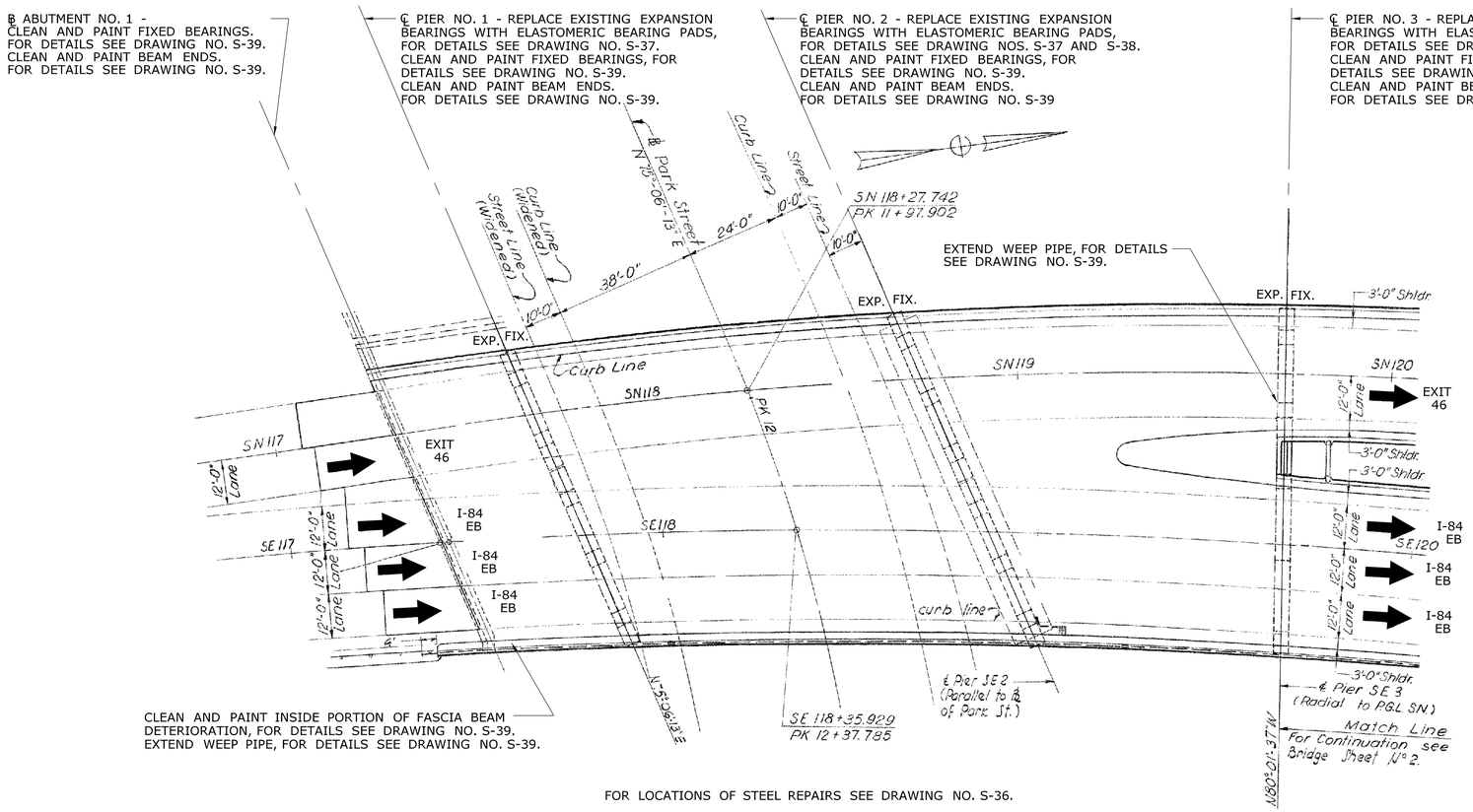

FOR LOCATIONS OF STEEL REPAIRS SEE DRAWING NO. S-36.

GENERAL PLAN - BRIDGE NO. 03400A, I-84 EB OVER PARK STREET AND PARKING LOT

SCALE: 1" = 20'

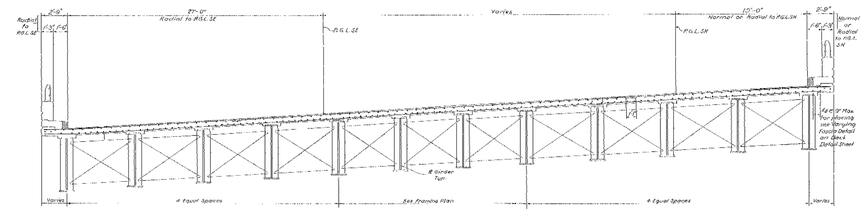

TYPICAL CROSS SECTION

SCALE: 1/8" = 1'-0"

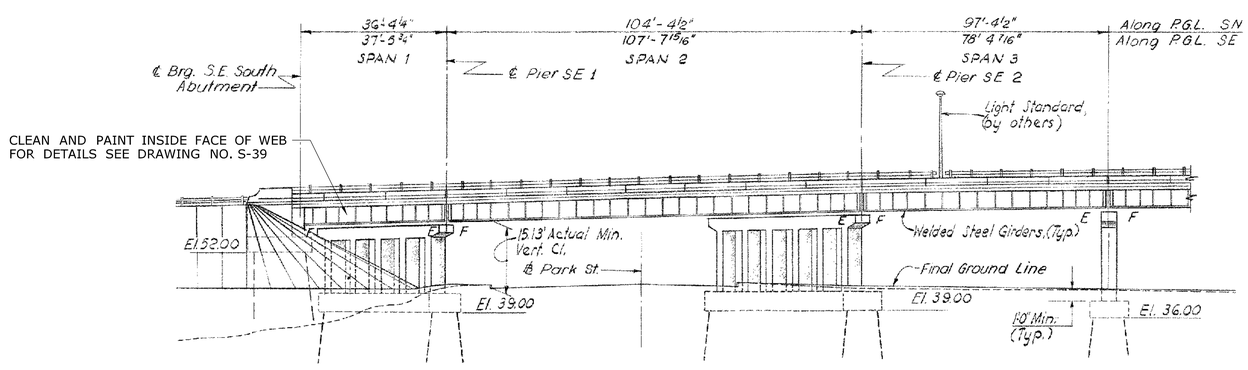

ELEVATION

SCALE: 1" = 20'

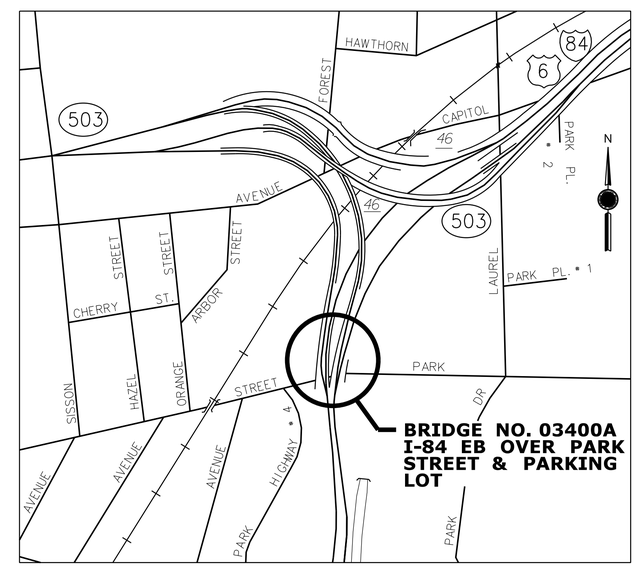

LOCATION PLAN

SCALE

0 1000 FT

REV.	DATE	REVISION DESCRIPTION	SHEET NO.
-	-	-	-
-	-	-	-
-	-	-	-
-	-	-	-
-	-	-	-
-	-	-	-

THE INFORMATION, INCLUDING ESTIMATED QUANTITIES OF WORK, SHOWN ON THESE SHEETS IS BASED ON LIMITED INVESTIGATIONS BY THE STATE AND IS IN NO WAY WARRANTED TO INDICATE THE CONDITIONS OF ACTUAL QUANTITIES OF WORK WHICH WILL BE REQUIRED.

Plotted Date: 1/2/2013

DESIGNER/DRAFTER: BW/TDC

CHECKED BY: JCM

SCALE AS NOTED

STATE OF CONNECTICUT
DEPARTMENT OF TRANSPORTATION

Filename: ...\SB_MSH_BR03400A_S35_GENERAL_PLAN.dgn

SIGNATURE/ BLOCK: OFFICE OF ENGINEERING

APPROVED BY:

PROJECT TITLE: BEAM END AND BEARING REPAIRS IN DISTRICT 1

TOWN: HARTFORD

DRAWING TITLE: BRIDGE NO. 03400A GENERAL PLAN

PROJECT NO. 171-359

DRAWING NO. S-35

SHEET NO. 03.35

REPLACE SLIDING BRONZE BEARINGS WITH ELASTOMERIC BEARINGS, FOR DETAILS SEE DRAWING NO. S-37. CLEAN AND PAINT FIXED BEARINGS, FOR DETAILS SEE DRAWING NO. S-39. CLEAN AND PAINT BEAM ENDS, FOR DETAILS SEE DRAWING NO. S-39.

REPLACE SLIDING BRONZE BEARINGS WITH ELASTOMERIC BEARINGS, FOR DETAILS SEE DRAWING NOS. S-37 AND S-38. CLEAN AND PAINT FIXED BEARINGS, FOR DETAILS SEE DRAWING NO. S-39. CLEAN AND PAINT BEAM ENDS, FOR DETAILS SEE DRAWING NO. S-39.

REPLACE SLIDING BRONZE BEARINGS WITH ELASTOMERIC BEARING, FOR DETAILS SEE DRAWING NO. S-37 AND S-38. CLEAN AND PAINT FIXED BEARINGS, FOR DETAILS SEE DRAWING NO. S-39. CLEAN AND PAINT BEAM ENDS, FOR DETAILS SEE DRAWING NO. S-39.

CLEAN AND PAINT FIXED BEARINGS. FOR DETAILS SEE DRAWING NO. S-39 CLEAN AND PAINT BEAM ENDS. FOR DETAILS SEE DRAWING NO. S-39.

EXTEND BROKEN WEEP PIPE. FOR DETAILS SEE DRAWING NO. S-39 SIMILIAR TO GIRDER 1 SPAN 1.

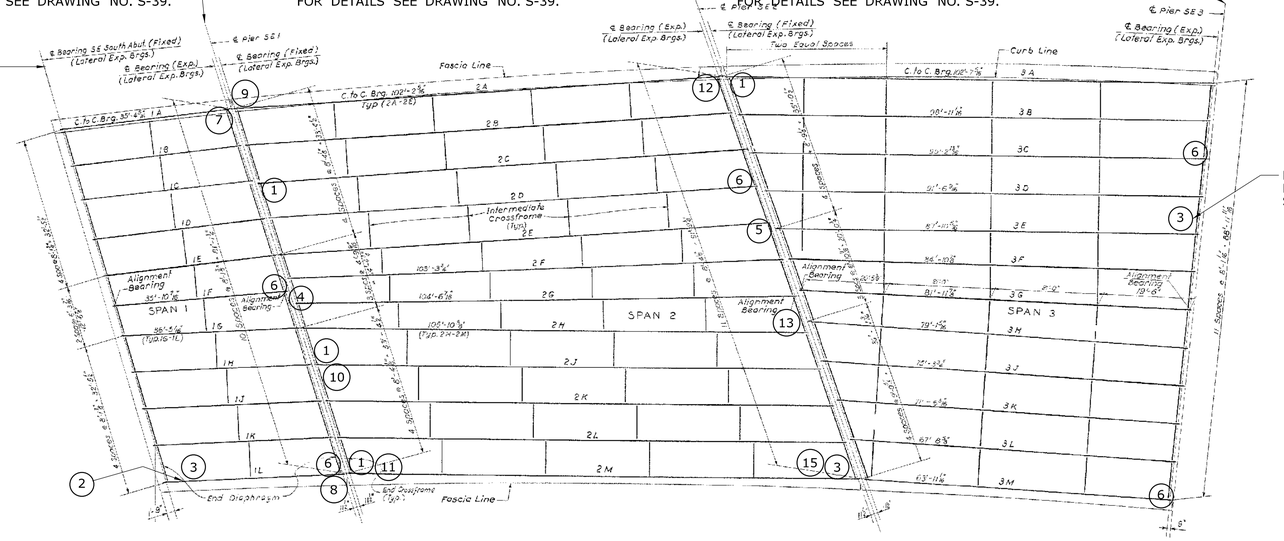

PLAN - SITE NO. 9, BRIDGE NO. 03400A, I-84 EB OVER PARK STREET AND PARKING LOT

SCALE: 1/16" = 1'-0"

LOCATION SYMBOL	DESCRIPTION OF WORK	REPAIR AREA
1	REPAIR HEAVILY RUSTED ANCHOR BOLTS WITH SEVERE SECTION LOSS. FOR DETAILS SEE DRAWING NO. S-6	-
2	CLEAN AND PAINT AREA OF HEAVY RUST. FOR DETAILS SEE DRAWING NO. S-39	-
3	EXTEND WEEP PIPE BEYOND BOTTOM FLANGE. FOR DETAILS SEE DRAWING NO. S-39	-
4	REPAIR CRACK IN WELD BETWEEN END DIAPHRAGM AND BEARING STIFFENER. FOR DETAILS SEE DRAWING NO. S-39	-
5	REPAIR CRACK IN WELD OF LOWER DIAPHRAGM ANGLE TO BEARING STIFFENER. FOR DETAILS SEE DRAWING NO. S-39	-
6	REPAIR CONCRETE MASONRY PADS. FOR DETAILS SEE DRAWING NO. S-6.	-
7	PLATE BOTTOM OF BOTH STIFFENERS - EAST ELEVATION OF GIRDER 1A AT PIER 1. FOR DETAILS SEE DRAWING NO. S-4	8"L X 4"H X 1/4"DP
8	PLATE BOTTOM OF BOTH STIFFENERS - EAST FACE OF GIRDER 1L AT PIER 1. FOR DETAILS SEE DRAWING NO. S-4	8"L X 3"H X 3/16"DP
9	PLATE BOTTOM OF WEB - WEST FACE OF GIRDER 2A AT PIER 1. FOR DETAILS SEE DRAWING NO. S-3	1.5'L X 3"H X 3/16"DP
10	PLATE BOTTOM OF STIFFENER - WEST FACE OF GIRDER 2J AT PIER 1. FOR DETAILS SEE DRAWING NO. S-4	8"L X 4"H X 3/16"DP
11	PLATE BOTTOM OF WEB AND STIFFENERS - WEST FACE OF GIRDER 2M AT PIER 1. FOR DETAILS SEE DRAWING NOS. S-3 AND S-4	1.5'L X 3"H X 3/16"DP
12	PLATE BOTTOM OF WEB - EAST FACE OF GIRDER 2A AT PIER 2. FOR DETAILS SEE DRAWING NO. S-3	1'L X 1½"H 3/16"DP
13	PLATE WEB AND BOTTOM OF STIFFENER - WEST FACE OF GIRDER 2H AT PIER 2. FOR DETAILS SEE DRAWING NOS. S-3 AND S-4	5"L X 5"H X 5/16"DP
14	PLATE BOTTOM OF WEB - WEST FACE OF GIRDER 2L AT PIER 2. DETAILS SEE DRAWING NO. S-3	4"L X 4"H X 3/16"DP
15	PLATE WEB AND BOTTOM OF STIFFENERS - WEST FACE OF GIRDER 2M AT PIER 2. FOR DETAILS SEE DRAWING NOS. S-3 AND S-4	2.5'L X 2"H X 3/16"DP
16	PLATE BOTTOM OF WEB - WEST SIDE OF GIRDER 3J AT PIER . FOR DETAILS SEE DRAWING NO. S-3	1'L X 2"H X 1/8"DP

BEAM REACTIONS (KIPS)			
MARK NO.	D.L.	S.D.L.	LL + I
1A - 1L	16	7	68
2A - 2M	60	18	102
3A - 3M	51	19	98

BEAM REACTION NOTES:

1. THE GIRDER REACTIONS HAVE BEEN PROVIDED FOR INFORMATION ONLY AND MAY BE USED TO DEVELOP DETAILS FOR JACKING THE SUPERSTRUCTURE.
2. THE DEAD LOAD REACTIONS ARE DUE TO THE STRUCTURAL STEEL AND CONCRETE SLAB.
3. THE SUPERIMPOSED DEAD LOAD REACTIONS ARE DUE TO THE PARAPETS AND BITUMINOUS CONCRETE OVERLAY.

EXISTING STRUCTURAL STEEL MATERIAL DESIGNATIONS:

STRUCTURAL STEEL: ASTM A 36
SOLE PLATES: ASTM A 36 62T
MASONRY PLATES: ASTM A 242

REV.	DATE	REVISION DESCRIPTION	SHEET NO.
-	-	-	-
-	-	-	-
-	-	-	-
-	-	-	-
-	-	-	-
-	-	-	-

THE INFORMATION, INCLUDING ESTIMATED QUANTITIES OF WORK, SHOWN ON THESE SHEETS IS BASED ON LIMITED INVESTIGATIONS BY THE STATE AND IS IN NO WAY WARRANTED TO INDICATE THE CONDITIONS OF ACTUAL QUANTITIES OF WORK WHICH WILL BE REQUIRED.

Plotted Date: 1/2/2013

DESIGNER/DRAFTER: BW/TDC
CHECKED BY: JCM
SCALE AS NOTED

STATE OF CONNECTICUT
DEPARTMENT OF TRANSPORTATION

Filename: ...\SB_MSH_BR03400A_S36_FRAMING_PLAN_AND_PROPOSED_BEARING_DETAILS

SIGNATURE/BLOCK: OFFICE OF ENGINEERING
APPROVED BY:

PROJECT TITLE: BEAM END AND BEARING REPAIRS IN DISTRICT 1

TOWN: HARTFORD
DRAWING TITLE: BRIDGE NO. 03400A FRAMING PLAN AND PROPOSED BEARING DETAILS

PROJECT NO. 171-359
DRAWING NO. S-36
SHEET NO. 03.36

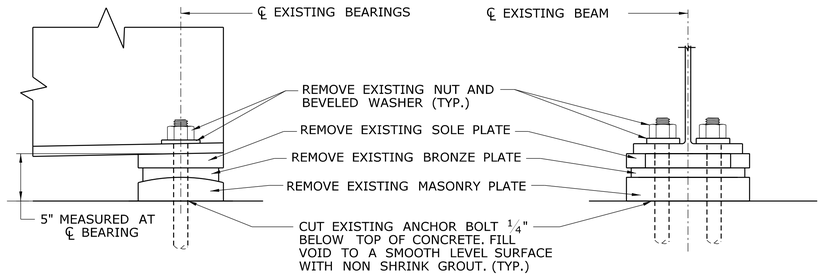

SIDE ELEVATION **END ELEVATION**

SPAN 1, SPAN 2 AND SPAN 3 EXISTING EXPANSION BEARING DETAILS

SCALE: 1 1/2" =1'-0"

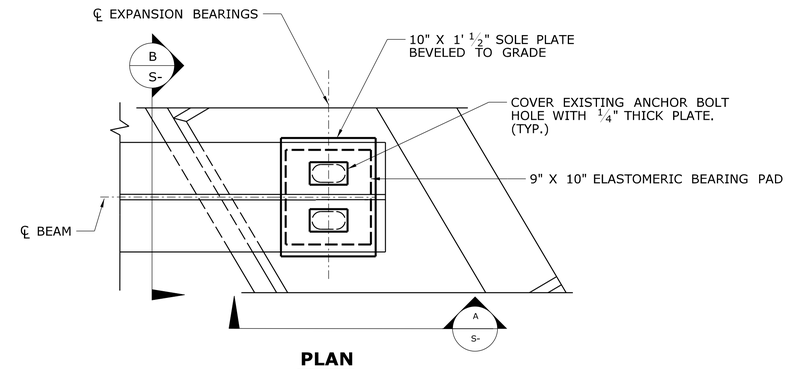

PLAN

SCALE: 1 1/2"=1'-0"

NOTES:
WORK INVOLVING JACKING THE EXISTING SUPERSTRUCTURE TO BE PAID FOR UNDER THE ITEM "JACKING FOR BEARING REPLACEMENT".
WORK INVOLVING THE REMOVAL OF THE EXISTING BEARING TO BE PAID FOR UNDER THE ITEM "BEARING REPLACEMENT WITH ELASTOMERIC BEARING PADS".
FOR ADDITIONAL NOTES SEE "EXPANSION BEARING NOTES" ON DRAWING NO. S-2.

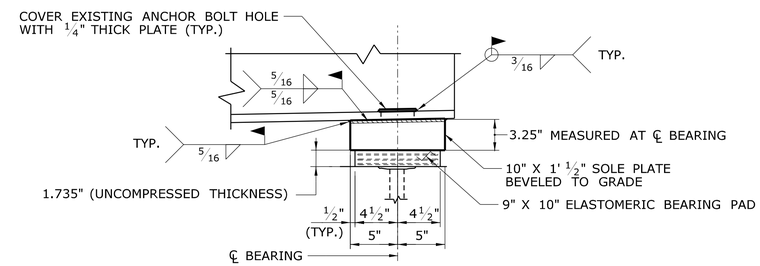

SECTION A

SCALE: 1 1/2"=1'-0"

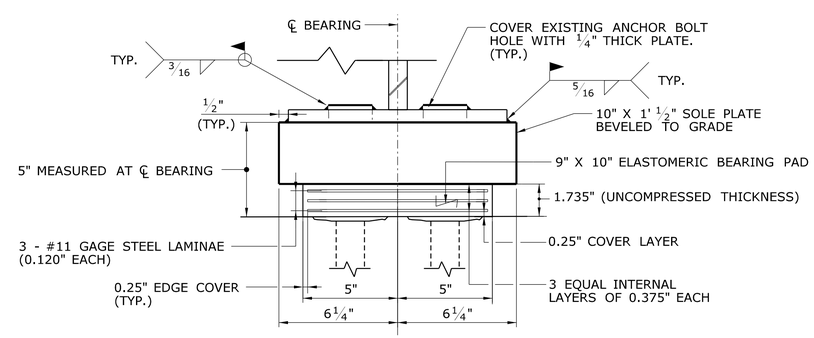

SECTION B

SCALE: 3"=1'-0"

SPAN 1 - PROPOSED ELASTOMERIC EXPANSION BEARING

REV.	DATE	REVISION DESCRIPTION	SHEET NO.
-	-	-	-
-	-	-	-
-	-	-	-
-	-	-	-
-	-	-	-
-	-	-	-

THE INFORMATION, INCLUDING ESTIMATED QUANTITIES OF WORK, SHOWN ON THESE SHEETS IS BASED ON LIMITED INVESTIGATIONS BY THE STATE AND IS IN NO WAY WARRANTED TO INDICATE THE CONDITIONS OF ACTUAL QUANTITIES OF WORK WHICH WILL BE REQUIRED.

Plotted Date: 1/2/2013

DESIGNER/DRAFTER: BW/TDC
CHECKED BY: JCM
SCALE AS NOTED

STATE OF CONNECTICUT
DEPARTMENT OF TRANSPORTATION

Filename: ...\SB_MSH_BR03400A_S37_PROPOSED BEARING_DETAILS_1.dgn

SIGNATURE/BLOCK:
OFFICE OF ENGINEERING
APPROVED BY:

PROJECT TITLE:
BEAM END AND BEARING REPAIRS IN DISTRICT 1

TOWN: HARTFORD
DRAWING TITLE: BRIDGE NO, 03400A PROPOSED BEARING DETAILS 1

PROJECT NO. 171-359
DRAWING NO. S-37
SHEET NO. 03.37

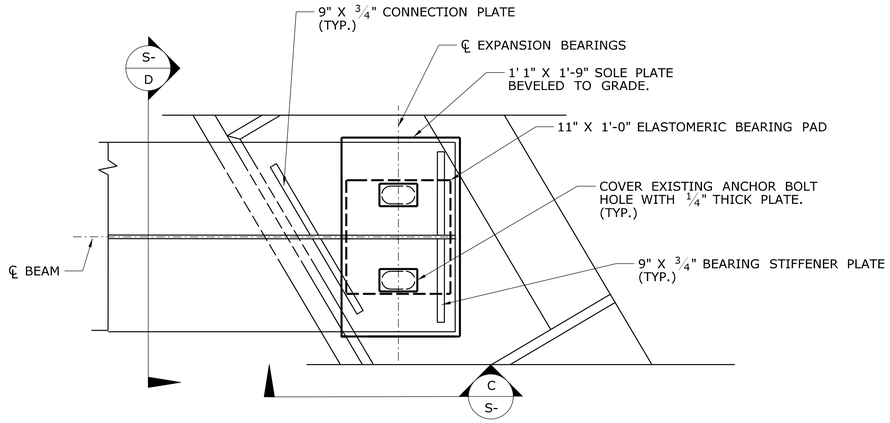

PLAN

SCALE: 1½"=1'-0"

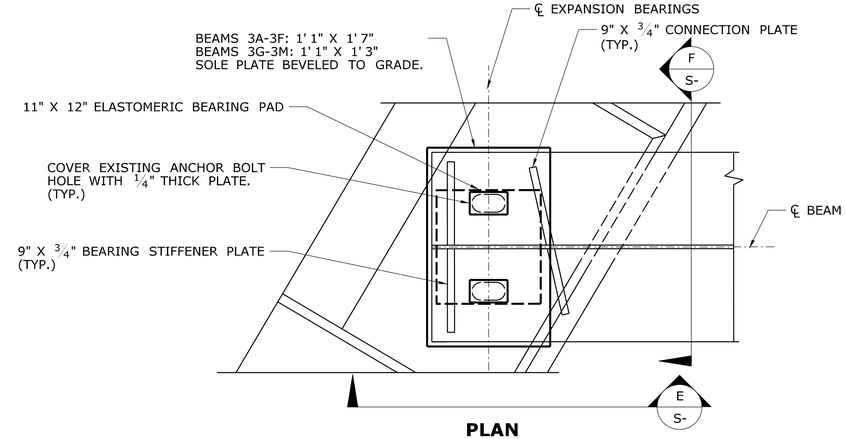

PLAN

SCALE: 1½"=1'-0"

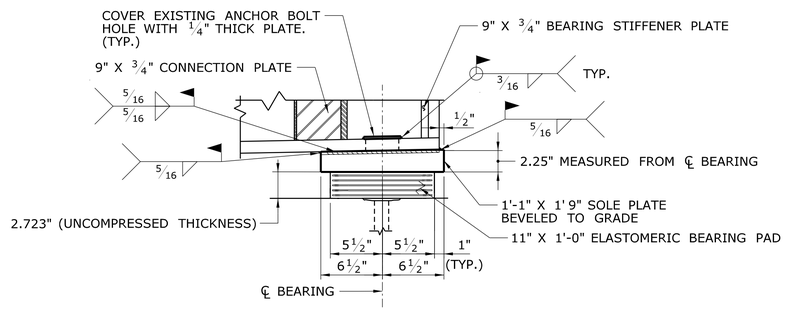

SECTION C

SCALE: 1½"=1'-0"

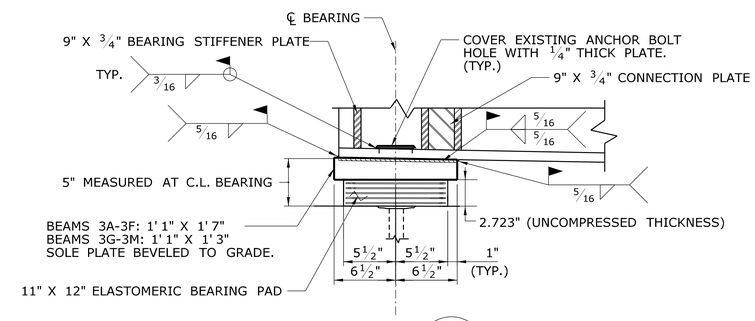

SECTION E

SCALE: 1½"=1'-0"

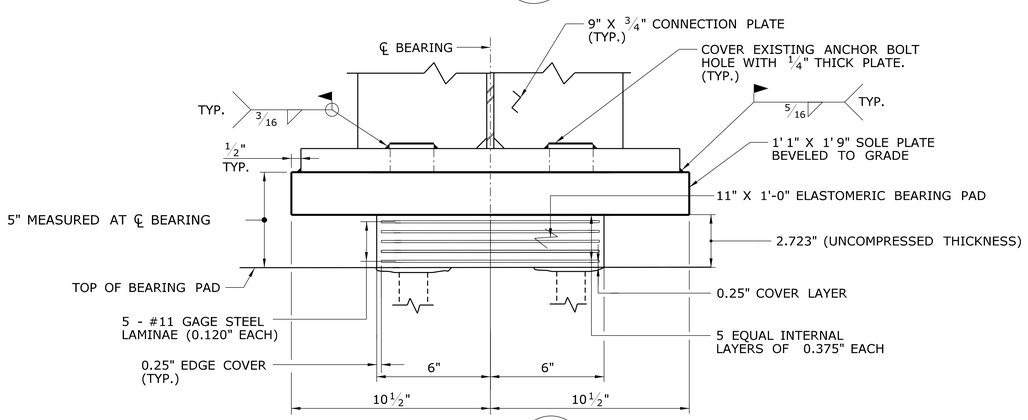

SECTION D

SCALE: 3"=1'-0"

SPAN 2 - PROPOSED ELASTOMERIC EXPANSION BEARING

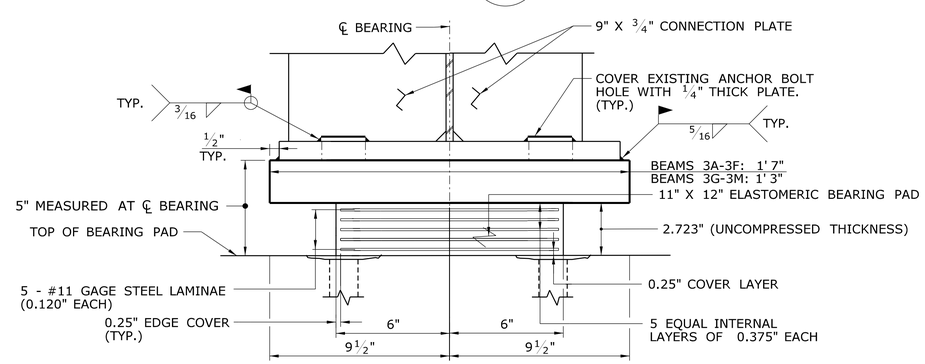

SECTION F

SCALE: 3"=1'-0"

SPAN 3 - PROPOSED ELASTOMERIC EXPANSION BEARING

NOTES:
WORK INVOLVING JACKING THE EXISTING SUPERSTRUCTURE TO BE PAID FOR UNDER THE ITEM "JACKING FOR BEARING REPLACEMENT".
WORK INVOLVING THE REMOVAL OF THE EXISTING BEARING TO BE PAID FOR UNDER THE ITEM "BEARING REPLACEMENT WITH ELASTOMERIC BEARING PADS".
FOR ADDITIONAL NOTES SEE "EXPANSION BEARING NOTES" ON DRAWING NO. S-2.

REV.	DATE	REVISION DESCRIPTION	SHEET NO.
-	-	-	-
-	-	-	-
-	-	-	-
-	-	-	-
-	-	-	-
-	-	-	-

THE INFORMATION, INCLUDING ESTIMATED QUANTITIES OF WORK, SHOWN ON THESE SHEETS IS BASED ON LIMITED INVESTIGATIONS BY THE STATE AND IS IN NO WAY WARRANTED TO INDICATE THE CONDITIONS OF ACTUAL QUANTITIES OF WORK WHICH WILL BE REQUIRED.

Plotted Date: 1/2/2013

DESIGNER/DRAFTER: BW/TDC
CHECKED BY: JCM
SCALE AS NOTED

STATE OF CONNECTICUT
DEPARTMENT OF TRANSPORTATION

Filename: ...\SB_MSH_BR03400A_S38_PROPOSED_BEARING_DETAILS_2.dgn

SIGNATURE/BLOCK: OFFICE OF ENGINEERING
APPROVED BY:

PROJECT TITLE: BEAM END AND BEARING REPAIRS IN DISTRICT 1

TOWN: HARTFORD

DRAWING TITLE: BRIDGE NO. 03400A PROPOSED BEARING DETAILS

PROJECT NO. 171-359
DRAWING NO. S-38
SHEET NO. 03.38

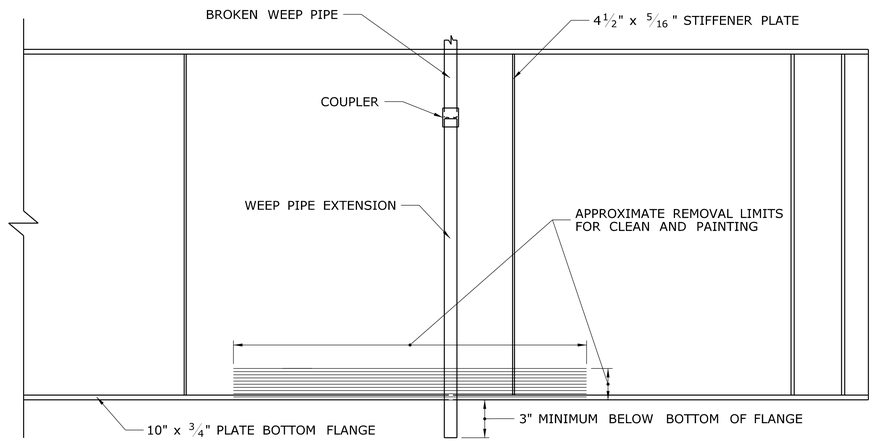

NOTES:
WORK INVOLVING THE REPAIRING OF WEEP PIPE TO BE PAID FOR UNDER THE ITEM "EXTEND EXISTING WEEPHOLES".
WORK INVOLVING CLEANING AND SPOT PAINTING TO BE INCLUDED FOR PAYMENT FOR UNDER THE ITEM "LOCALIZED PAINT REMOVAL AND FIELD PAINTING OF EXISTING STEEL".

GIRDER 1, SPAN 1 INTERIOR FACE SPOT PAINTING AND WEEP PIPE REPAIR DETAILS

SCALE: 1" = 1'-0"

FOR NOTES SEE "WEEP PIPE NOTES" AND "REHABILIATION OF EXISTING STRUCTURAL STEEL" ON DRAWING NO. S-2.

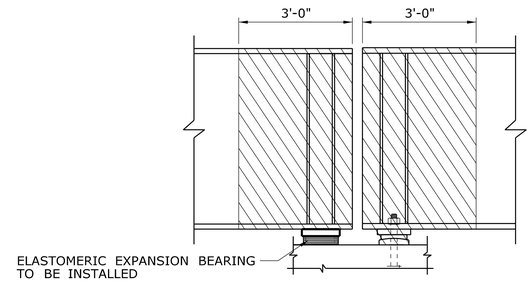

NOTE: PIER BEAM END ELEVATION SHOWN, ABUTMENT SIMILIAR.

BEAM END ELEVATION LIMITS

SCALE: 1/2" = 1'-0"

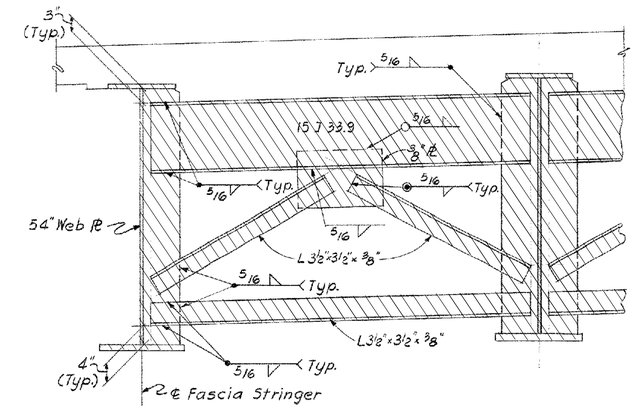

END CROSSFRAME LIMITS

SCALE: 1" = 1'-0"

DENOTES LIMITS OF CLEANING AND PAINTING OF BEARINGS. THIS WORK TO BE INCLUDED FOR PAYMENT UNDER THE ITEM "LOCALIZED PAINT REMOVAL AND FIELD PAINTING OF EXISTING STEEL (SITE NO. 9)".

FOR NOTES SEE "PAINTING NOTES" ON DRAWING NO. S-2.

LIMITS OF PAINTING - BEAM ENDS

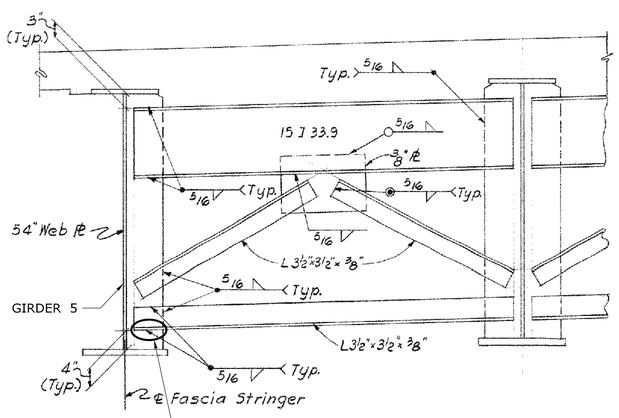

REPAIR CRACK IN WELD BETWEEN THE BOTTOM DIAPHRAGM ANGLE AND BEARING STIFFENER. WELDING TO BE INCLUDED FOR PAYMENT UNDER THE ITEM "REPAIR DEFECTIVE WELDS". THE REMOVAL AND REPAINTING OF EXISTING STEEL TO BE PAID FOR UNDER THE ITEM "LOCALIZED PAINT REMOVAL AND FIELD PAINTING OF EXISTING STEEL".

WELD REPAIR DETAILS - GIRDER 5 IN SPAN 2 OVER PIER 2

SCALE: 1" = 1'-0"

REPAIR CRACK IN WELD BETWEEN THE END DIAPHRAGM AND BEARING STIFFENER WELDING TO BE INCLUDED FOR PAYMENT UNDER THE ITEM "REPAIR DEFECTIVE WELDS". THE REMOVAL AND REPAINTING OF EXISTING STEEL TO BE PAID FOR UNDER THE ITEM "LOCALIZED PAINT REMOVAL AND FIELD PAINTING OF EXISTING STEEL".

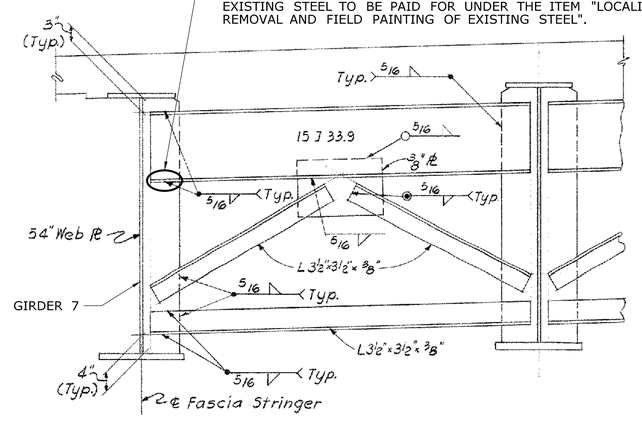

WELD REPAIR DETAILS - GIRDER 7 IN SPAN 2 OVER PIER 1

SCALE: 1" = 1'-0"

EXPOSED SURFACE OF BRONZE PLATE SHALL NOT BE PAINTED

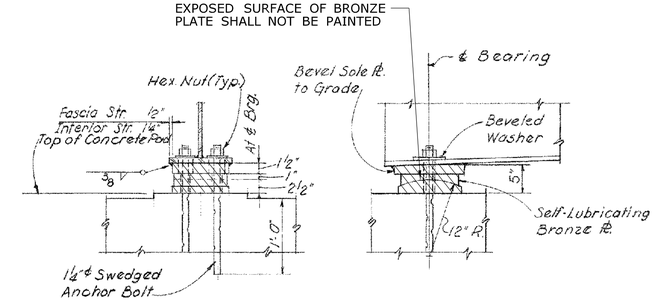

DENOTES LIMITS OF CLEANING AND PAINTING OF BEARINGS. THIS WORK TO BE INCLUDED FOR PAYMENT UNDER THE ITEM "LOCALIZED PAINT REMOVAL AND FIELD PAINTING OF EXISTING STEEL (SITE NO. 9)".

FOR NOTES SEE "PAINTING NOTES" ON DRAWING NO. S-2.

	SPAN 1 AT ABUTMENT	SPAN 2	GIRDERS 3A-3F SPAN 3	GIRDERS 3H-3M SPAN 3
SOLE PLATE	13" X 9"	13 1/2" X 1'-6"	13 1/2" X 1'-4"	13" X 12"
BRONZE PLATE	10" X 8"	10 1/2" X 1'-5"	10 1/2" X 1'-3"	10" X 11"
MASONRY PLATE	12" X 9"	12" X 1'-6"	12" X 1'-4"	12" X 12"

LIMITS OF PAINTING - FIXED BEARINGS

SCALE: 1" = 1'-0"

REV.	DATE	REVISION DESCRIPTION	SHEET NO.
-	-	-	-
-	-	-	-
-	-	-	-
-	-	-	-
-	-	-	-
-	-	-	-

THE INFORMATION, INCLUDING ESTIMATED QUANTITIES OF WORK, SHOWN ON THESE SHEETS IS BASED ON LIMITED INVESTIGATIONS BY THE STATE AND IS IN NO WAY WARRANTED TO INDICATE THE CONDITIONS OF ACTUAL QUANTITIES OF WORK WHICH WILL BE REQUIRED.

Plotted Date: 1/2/2013

DESIGNER/DRAFTER: TDC
CHECKED BY: JCM
SCALE AS NOTED

STATE OF CONNECTICUT
DEPARTMENT OF TRANSPORTATION

Filename: ...\SB_MSH_BR03400A_S39_MISCELLANEOUS_REPAIR_DETAILS.dgn

SIGNATURE/BLOCK:
OFFICE OF ENGINEERING
APPROVED BY:

PROJECT TITLE:
BEAM END AND BEARING REPAIRS IN DISTRICT 1

TOWN: HARTFORD
DRAWING TITLE: BRIDGE NO. 03400A MISCELLANEOUS REPAIR DETAILS

PROJECT NO. 171-359
DRAWING NO. S-39
SHEET NO. 03.39

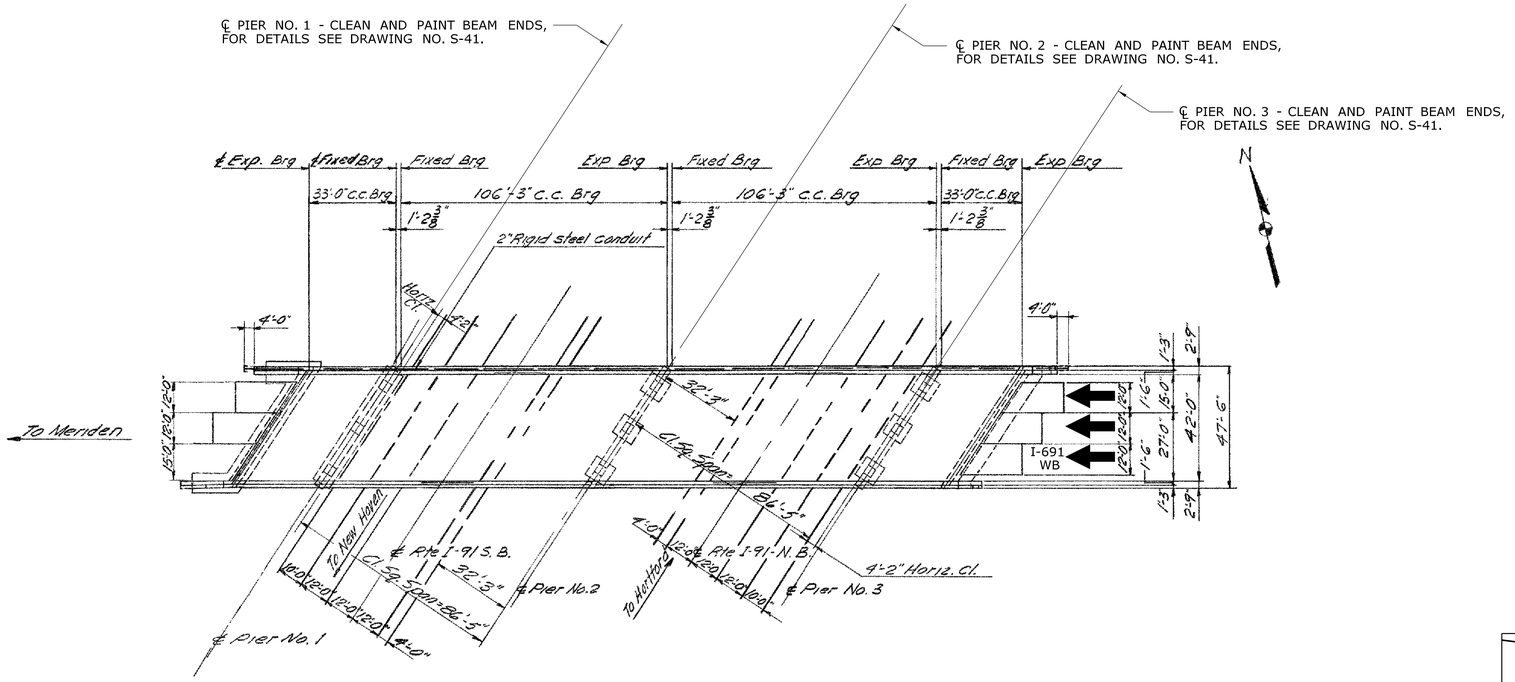

GENERAL PLAN - BRIDGE NO. 01831, I-691 WB OVER I-91

SCALE: 1" = 30'

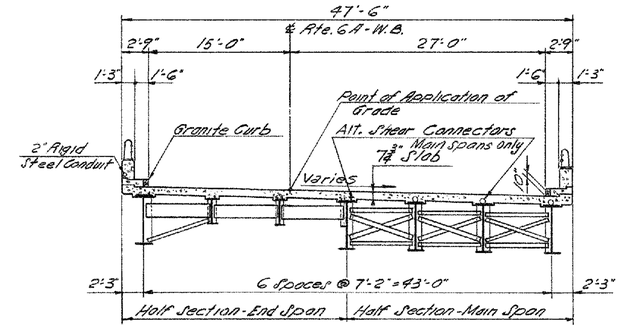

WESTBOUND TYPICAL CROSS SECTION

SCALE: 1/8" = 1'-0"

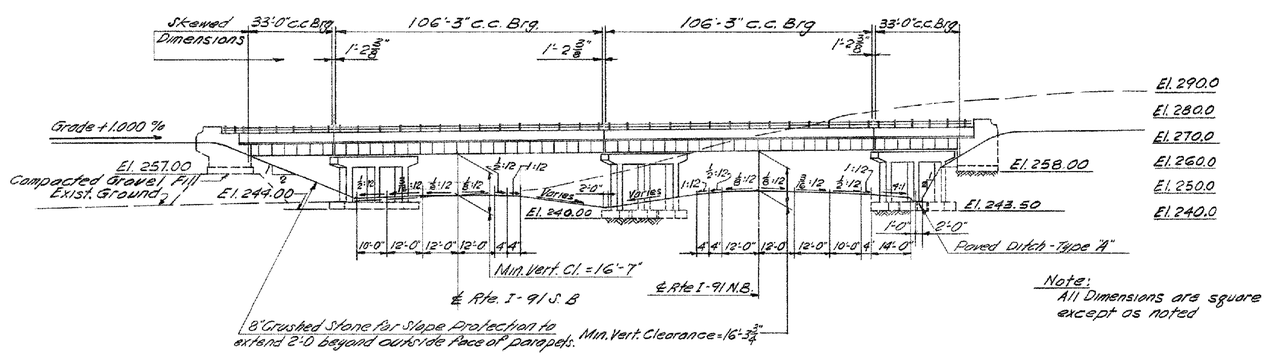

ELEVATION

SCALE: 1" = 30'

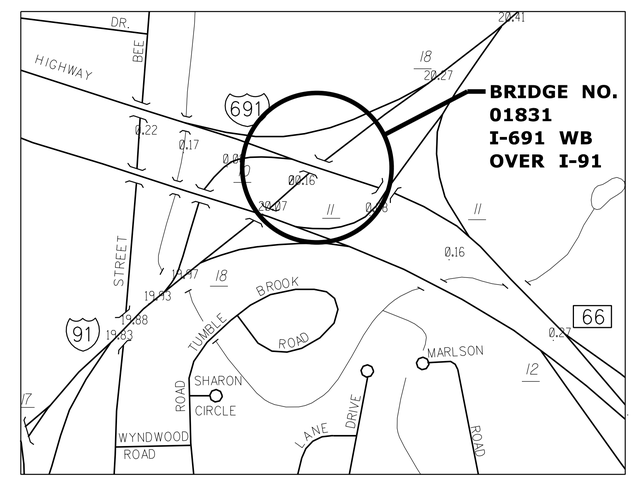

LOCATION PLAN

SCALE 0 — 1000 FT

REV.	DATE	REVISION DESCRIPTION	SHEET NO.
-	-	-	-
-	-	-	-
-	-	-	-
-	-	-	-
-	-	-	-
-	-	-	-

THE INFORMATION, INCLUDING ESTIMATED QUANTITIES OF WORK, SHOWN ON THESE SHEETS IS BASED ON LIMITED INVESTIGATIONS BY THE STATE AND IS IN NO WAY WARRANTED TO INDICATE THE CONDITIONS OF ACTUAL QUANTITIES OF WORK WHICH WILL BE REQUIRED.

Plotted Date: 1/2/2013

DESIGNER/DRAFTER: BW
CHECKED BY: JCM
SCALE AS NOTED

STATE OF CONNECTICUT
DEPARTMENT OF TRANSPORTATION

Filename: ...\SB_MSH_BR01831_S40_GENERAL_PLAN.dgn

SIGNATURE/BLOCK: OFFICE OF ENGINEERING
APPROVED BY:

PROJECT TITLE: BEAM END AND BEARING REPAIRS IN DISTRICT 1

TOWN: MERIDEN
DRAWING TITLE: BRIDGE NO. 01831 GENERAL PLAN

PROJECT NO. 171-359
DRAWING NO. S-40
SHEET NO. 03.40

BEAM SCHEDULES

	WEB	TOP FL	BOT. FL
G-1	60"X 3/8"	12"X 3/4"	12"X 3/4"
G-2	60"X 3/8"	18"X 7/8"	18"X 7/8"
G-3	60"X 3/8"	18"X 7/8"	18"X 7/8"
B-1	W30X 108		

EXISTING STRUCTURAL STEEL MATERIAL DESIGNATIONS:

STRUCTURAL STEEL: ASTM A 36-62T
MASONRY PLATES: ASTM A 242

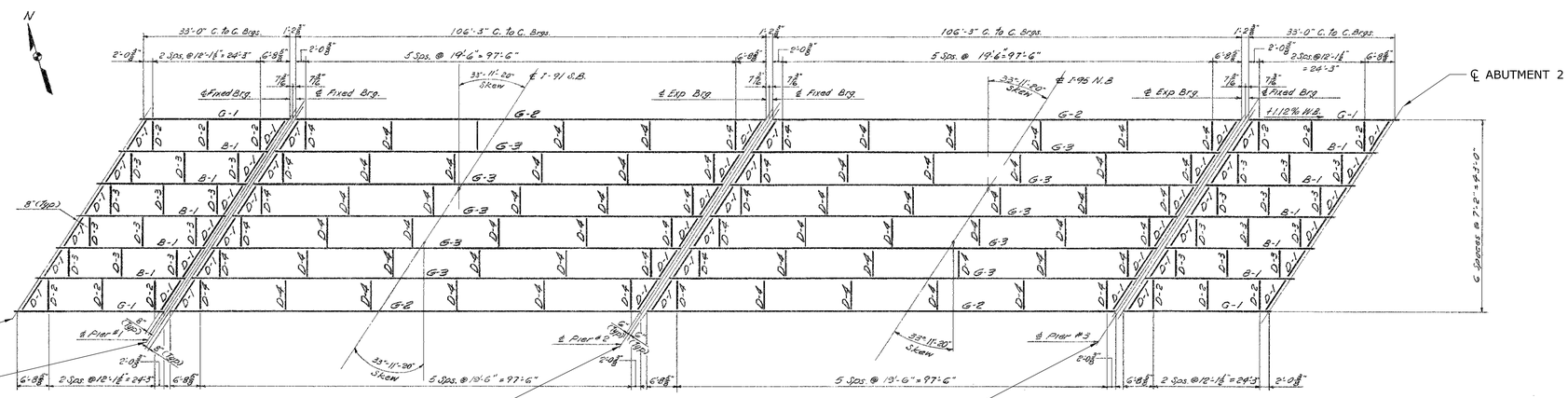

℄ PIER NO. 1
CLEAN AND PAINT BEAM ENDS
FOR DETAILS SEE THIS SHEET

℄ PIER NO. 2
CLEAN AND PAINT BEAM ENDS
FOR DETAILS SEE THIS SHEET

℄ PIER NO. 3
CLEAN AND PAINT BEAM ENDS
FOR DETAILS SEE THIS SHEET

PLAN - SITE NO. 10 BRIDGE NO. 01831, I-691 WB OVER I-91

SCALE: 1/16" = 1'-0"

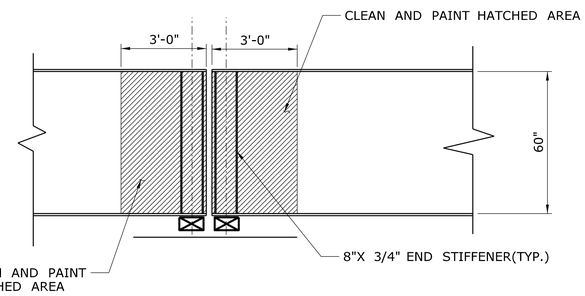

PIER 2 BEAM END PAINTING AND PIER 1,2 FACIAL BEAM

SCALE: 3/8"= 1'-0"

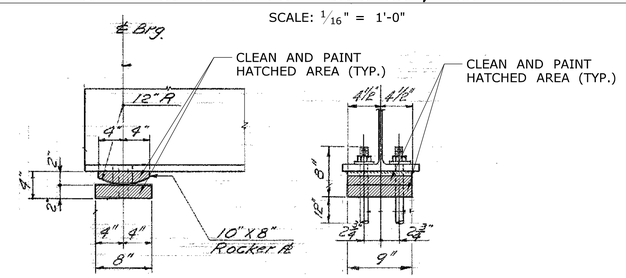

Typical for fixed and expansion ends of B1
Typical for expansion end of G-1 at abutment only
G-1 & G-1

FIXED & EXPANSION PLATE BEARING

Scale: 1" = 1'-0"

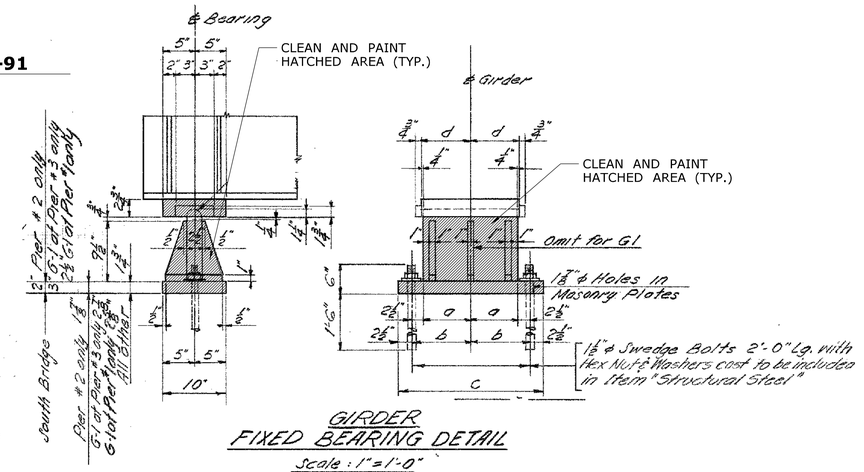

GIRDER
FIXED BEARING DETAIL

Scale: 1" = 1'-0"

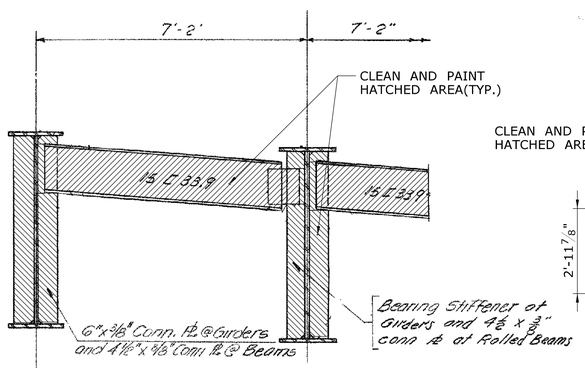

DIAPHRAGM AND STIFFENER PAINTING

DIAPHRAGM D-1

Scale: 1/2" = 1'-0"

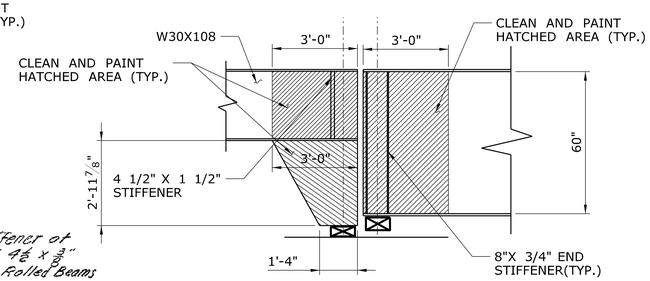

PIER 1 AND PIER 2 INTERIOR GIRDERS (TYP.)

SCALE: 3/8"= 1'-0"

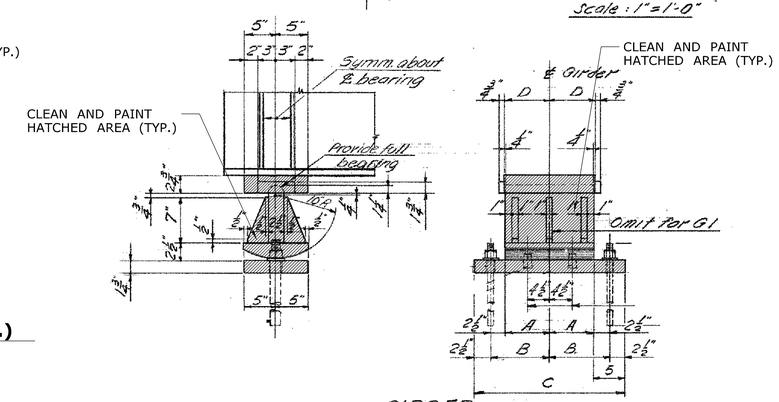

GIRDER
EXPANSION BEARING DETAILS

Scale: 1" = 1'-0"

BEARING DIMENSION TABLE

Girders G1				Girders G2 & G3	
Fixed @ Piers only		Exp		Fixed	
a	5"	A	7"	a	7"
b	7 1/2"	B	9 1/2"	b	9 1/2"
c	1'-8"	C	2'-0"	c	2'-0"
d	5 1/4"	D	7 1/4"	d	7 1/4"

▨ DENOTES LIMITS OF CLEANING AND PAINTING OF BEAM ENDS AND BEARINGS. THIS WORK TO BE INCLUDED FOR PAYMENT UNDER THE ITEM "LOCALIZED PAINT REMOVAL AND FIELD PAINTING OF EXISTING STEEL (SITE NO. 10)".

FOR NOTES SEE "PAINTING NOTES" ON DRAWING NO. S-2.

REV.	DATE	REVISION DESCRIPTION	SHEET NO.
-	-	-	-
-	-	-	-
-	-	-	-
-	-	-	-
-	-	-	-
-	-	-	-

THE INFORMATION, INCLUDING ESTIMATED QUANTITIES OF WORK, SHOWN ON THESE SHEETS IS BASED ON LIMITED INVESTIGATIONS BY THE STATE AND IS IN NO WAY WARRANTED TO INDICATE THE CONDITIONS OF ACTUAL QUANTITIES OF WORK WHICH WILL BE REQUIRED.

Plotted Date: 1/2/2013

DESIGNER/DRAFTER: BW
CHECKED BY: JCM
SCALE AS NOTED

STATE OF CONNECTICUT
DEPARTMENT OF TRANSPORTATION

Filename: ...\SB_MSH_BR01831_S41_FRAMING_PLAN_AND_CLEAN_AND_PAINT_DETAILS.dgn

SIGNATURE/BLOCK: OFFICE OF ENGINEERING
APPROVED BY:

PROJECT TITLE: BEAM END AND BEARING REPAIRS IN DISTRICT 1

TOWN: MERIDEN
DRAWING TITLE: BRIDGE NO. 01831 FRAMING PLAN AND CLEAN AND PAINT DETAILS

PROJECT NO. 171-359
DRAWING NO. S-41
SHEET NO. 03.41

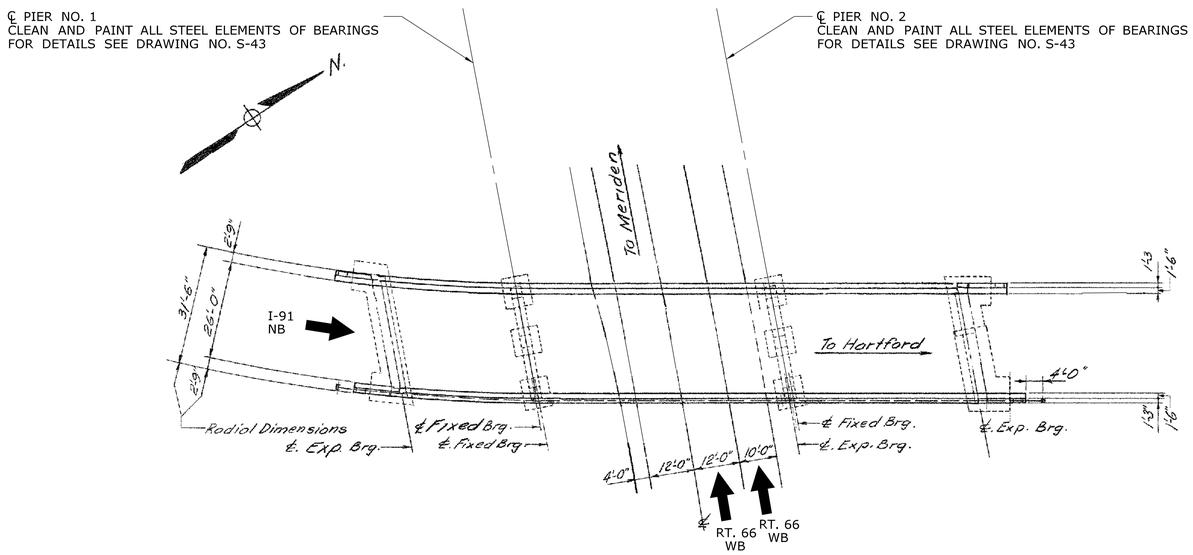

GENERAL PLAN - BRIDGE NO. 01837, I-91 TR 816 OVER RT. 66 WB

SCALE: 1" = 20'

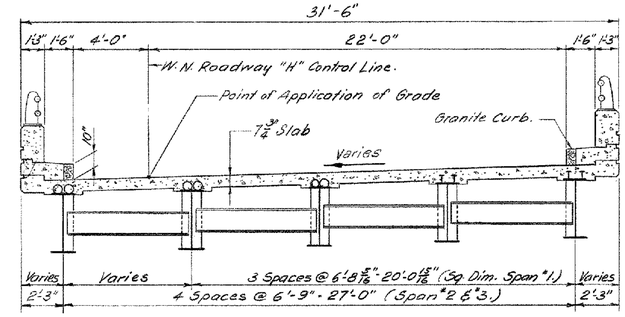

TYPICAL CROSS SECTION

SCALE: ¼" = 1'-0"

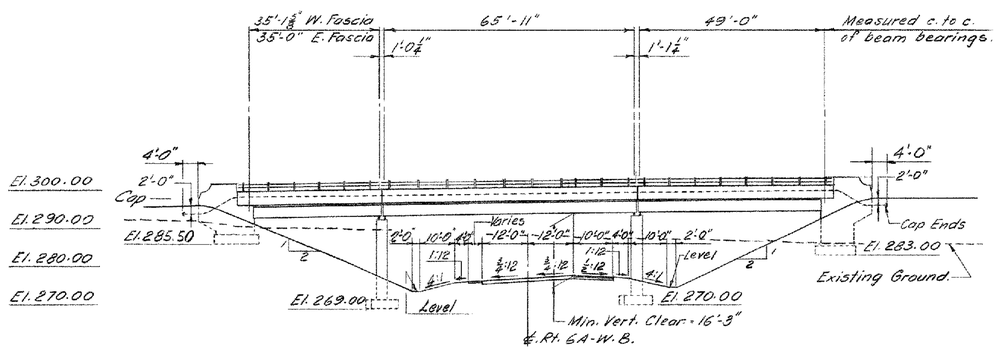

ELEVATION

SCALE: 1" = 20'

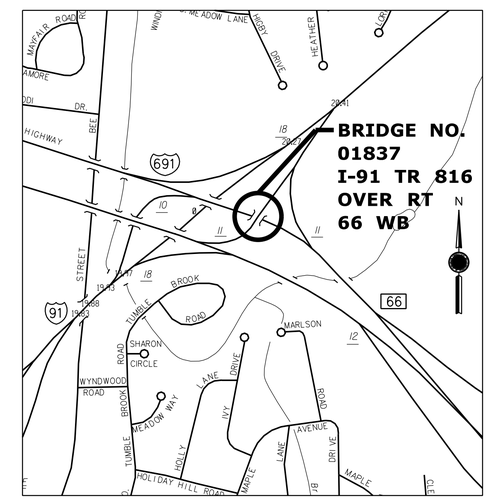

LOCATION PLAN

SCALE

0 1000 FT

REV.	DATE	REVISION DESCRIPTION	SHEET NO.
-	-	-	-
-	-	-	-
-	-	-	-
-	-	-	-
-	-	-	-
-	-	-	-

THE INFORMATION, INCLUDING ESTIMATED QUANTITIES OF WORK, SHOWN ON THESE SHEETS IS BASED ON LIMITED INVESTIGATIONS BY THE STATE AND IS IN NO WAY WARRANTED TO INDICATE THE CONDITIONS OF ACTUAL QUANTITIES OF WORK WHICH WILL BE REQUIRED.

Plotted Date: 1/2/2013

DESIGNER/DRAFTER: TDC

CHECKED BY: JCM

SCALE AS NOTED

STATE OF CONNECTICUT
DEPARTMENT OF TRANSPORTATION

Filename: ...\SB_MSH_BR01837_S42_GENERAL_PLAN.dgn

SIGNATURE/BLOCK: OFFICE OF ENGINEERING

APPROVED BY:

PROJECT TITLE: BEAM END AND BEARING REPAIRS IN DISTRICT 1

TOWN: MERIDEN

DRAWING TITLE: BRIDGE NO. 01837 GENERAL PLAN

PROJECT NO. 171-359

DRAWING NO. S-42

SHEET NO. 03.42

CLEAN AND PAINT ALL STEEL ELEMENTS OF BOTH FIXED AND EXPANSION BEARINGS AT PIER 1 FOR DETAILS SEE DETAIL THIS SHEET.

CLEAN AND SPOT PAINT BEAM 1 IN SPANS 2 OVER PIER 2, AS DIRECTED BY THE ENGINEER. FOR DETAILS SEE THIS SHEET.

CLEAN AND PAINT ALL STEEL ELEMENTS OF FIXED BEARINGS AT PIER 2 SPAN 3. FOR DETAILS SEE THIS SHEET.

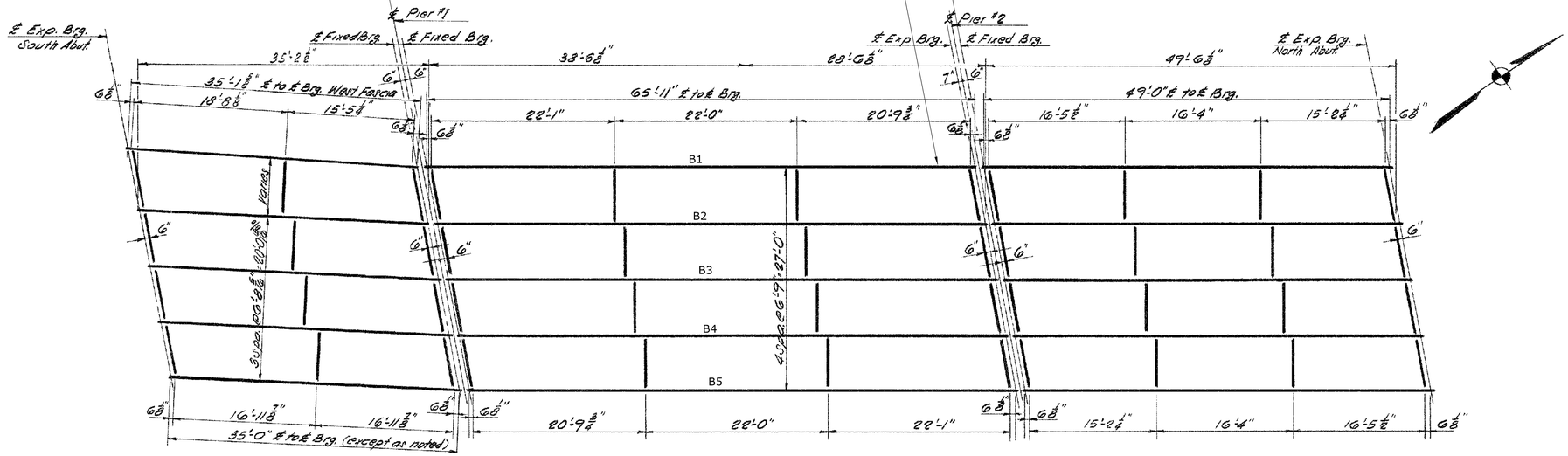

FRAMING PLAN - BRIDGE NO. 01837, I-91 TR 816 OVER RT. 66 WB

SCALE: 1/8" = 1'-0"

EXISTING STRUCTURAL STEEL MATERIAL DESIGNATIONS:

STRUCTURAL STEEL: ASTM A 36-62T
MASONRY PLATES: ASTM A 242
SOLE PLATES: ASTM A 36-62T

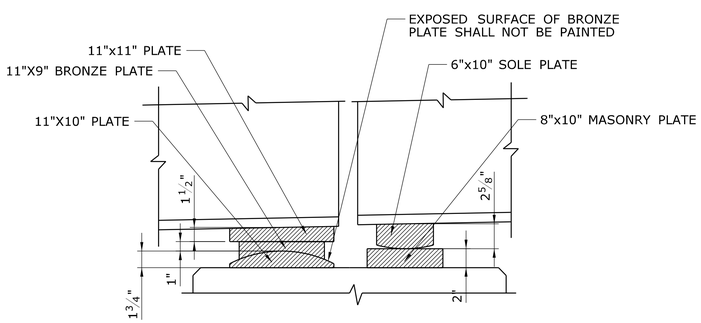

CLEAN AND PAINTING DETAIL BEARINGS AT PIER 2

SCALE : 1 1/2" = 1'-0"

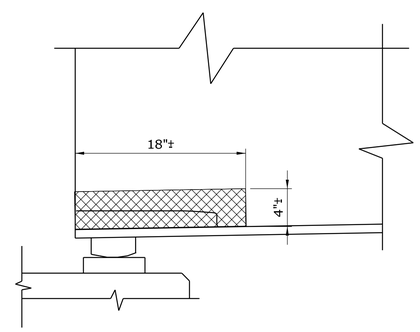

CLEAN AND PAINT DETAIL BEAM 1 SPAN 2 @ PIER 2 INSIDE FACE

SCALE : 1 1/2" = 1'-0"

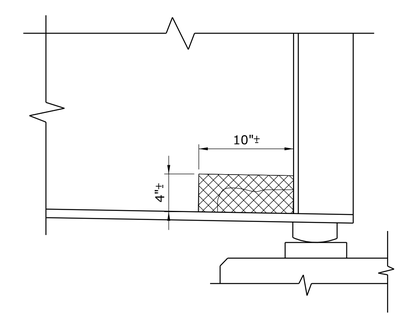

CLEAN AND PAINT DETAIL BEAM 1 SPAN 2 @ PIER 2 FASCIA

SCALE : 1 1/2" = 1'-0"

* PIER 1 SIMILIAR, EXCEPT BOTH SETS OF BEARINGS ARE FIXED.

NOTE: THESE DETAILS ARE FOR INFORMATION ONLY.

DENOTES LIMITS OF CLEANING AND PAINTING OF BEARINGS. THIS WORK TO BE INCLUDED FOR PAYMENT FOR UNDER THE ITEM "LOCALIZED PAINT REMOVAL AND FIELD PAINTING OF EXISTING STEEL (SITE NO. 11)".

FOR "PAINTING NOTES" SEE DRAWING NO. S-2.

DENOTES LIMITS OF CLEANING AND PAINTING OF STRUCTURAL STEEL. THIS WORK TO BE INCLUDED FOR PAYMENT UNDER THE ITEM "LOCALIZED PAINT REMOVAL AND FIELD PAINTING OF EXISTING STEEL".

FOR "PAINTING NOTES" SEE DRAWING NO. S-2.

REV.	DATE	REVISION DESCRIPTION	SHEET NO.
-	-	-	-
-	-	-	-
-	-	-	-
-	-	-	-
-	-	-	-
-	-	-	-

THE INFORMATION, INCLUDING ESTIMATED QUANTITIES OF WORK, SHOWN ON THESE SHEETS IS BASED ON LIMITED INVESTIGATIONS BY THE STATE AND IS IN NO WAY WARRANTED TO INDICATE THE CONDITIONS OF ACTUAL QUANTITIES OF WORK WHICH WILL BE REQUIRED.

Plotted Date: 1/2/2013

DESIGNER/DRAFTER: BW
CHECKED BY: JCM
SCALE AS NOTED

STATE OF CONNECTICUT
DEPARTMENT OF TRANSPORTATION

Filename: ...\SB_MSH_BR01837_S43_ FRAMING_PLAN_AND_CLEAN_AND_PAINT_DETAILS.dg

SIGNATURE/ BLOCK: OFFICE OF ENGINEERING
APPROVED BY:

PROJECT TITLE: BEAM END AND BEARING REPAIRS IN DISTRICT 1

TOWN: MERIDEN
DRAWING TITLE: BRIDGE NO. 01837 FRAMING PLAN AND CLEAN AND PAINT DETAILS

PROJECT NO. 171-359
DRAWING NO. S-43
SHEET NO. 03.43

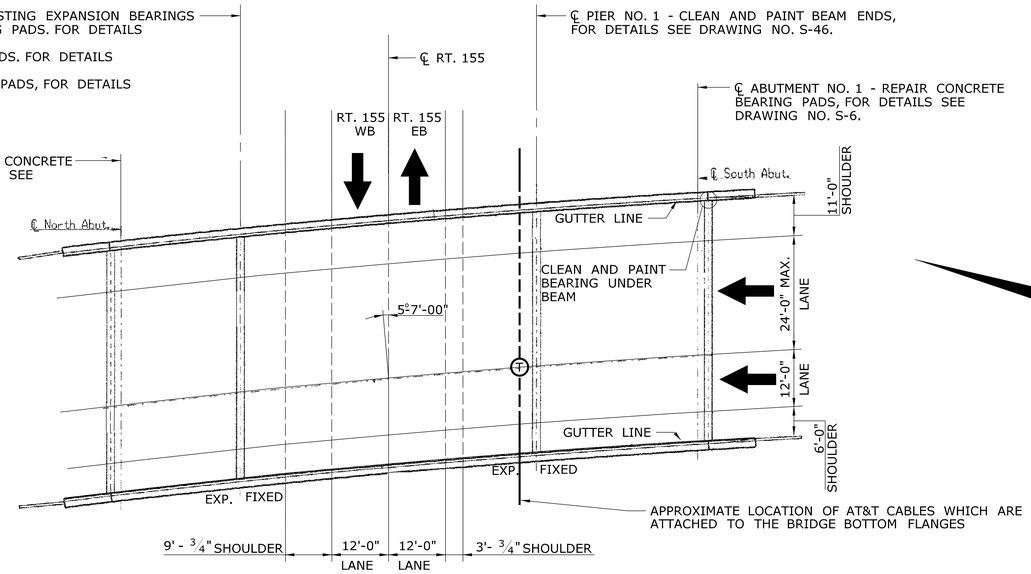

GENERAL PLAN-BRIDGE NO. 00629 ROUTE 9 NB OVER ROUTE 115, MIDDLETOWN

SCALE: 1" = 20'

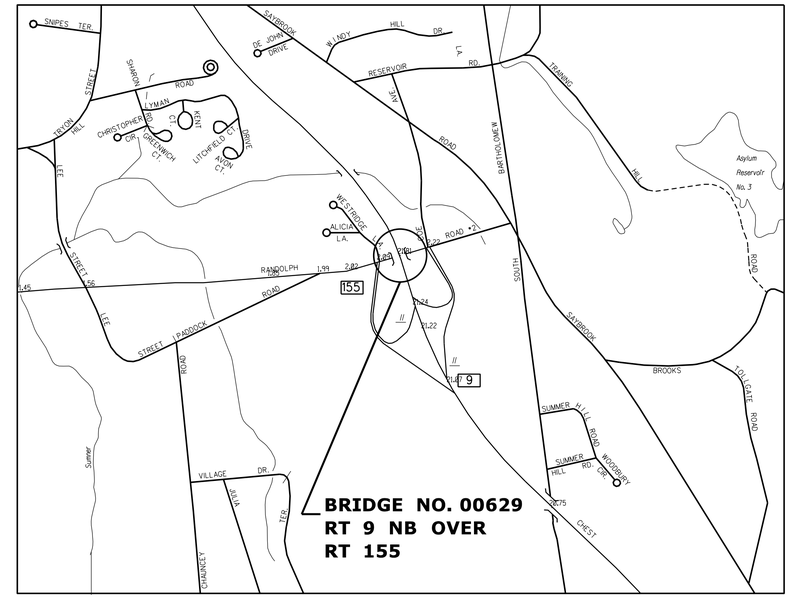

LOCATION PLAN

SCALE 0 1000 FT

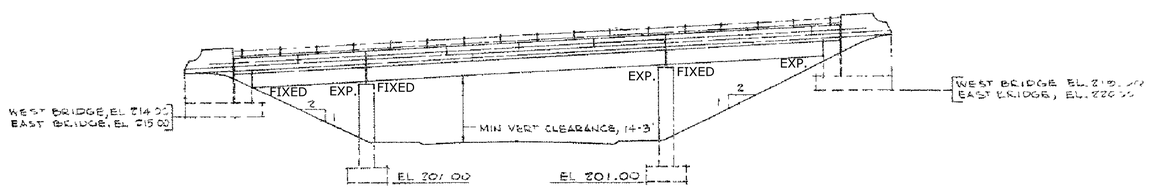

ELEVATION

SCALE: 1/16" = 1'-0"

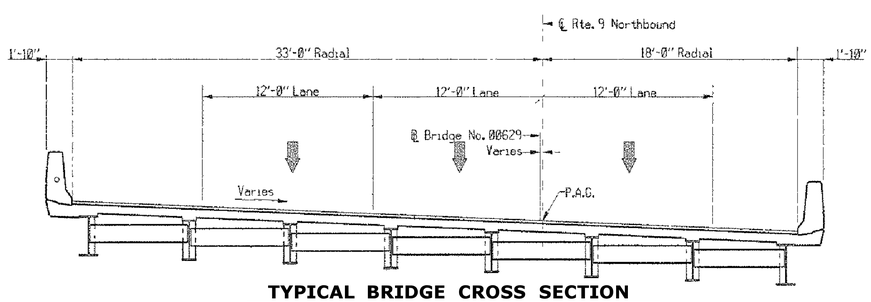

TYPICAL BRIDGE CROSS SECTION

SCALE: 1" = 5'

REV.	DATE	REVISION DESCRIPTION	SHEET NO.
-	-	-	-
-	-	-	-
-	-	-	-
-	-	-	-
-	-	-	-
-	-	-	-

THE INFORMATION, INCLUDING ESTIMATED QUANTITIES OF WORK, SHOWN ON THESE SHEETS IS BASED ON LIMITED INVESTIGATIONS BY THE STATE AND IS IN NO WAY WARRANTED TO INDICATE THE CONDITIONS OF ACTUAL QUANTITIES OF WORK WHICH WILL BE REQUIRED.

Plotted Date: 1/2/2013

DESIGNER/DRAFTER: BU

CHECKED BY: JCM

SCALE AS NOTED

STATE OF CONNECTICUT
DEPARTMENT OF TRANSPORTATION

Filename: ...\SB_MSH_BR00629_S44_GENERAL_PLAN.dgn

SIGNATURE/BLOCK: OFFICE OF ENGINEERING

APPROVED BY:

PROJECT TITLE: BEAM END AND BEARING REPAIRS IN DISTRICT 1

TOWN: MIDDLETOWN

DRAWING TITLE: BRIDGE NO. 00629 GENERAL PLAN

PROJECT NO. 171-359

DRAWING NO. S-44

SHEET NO. 03.44

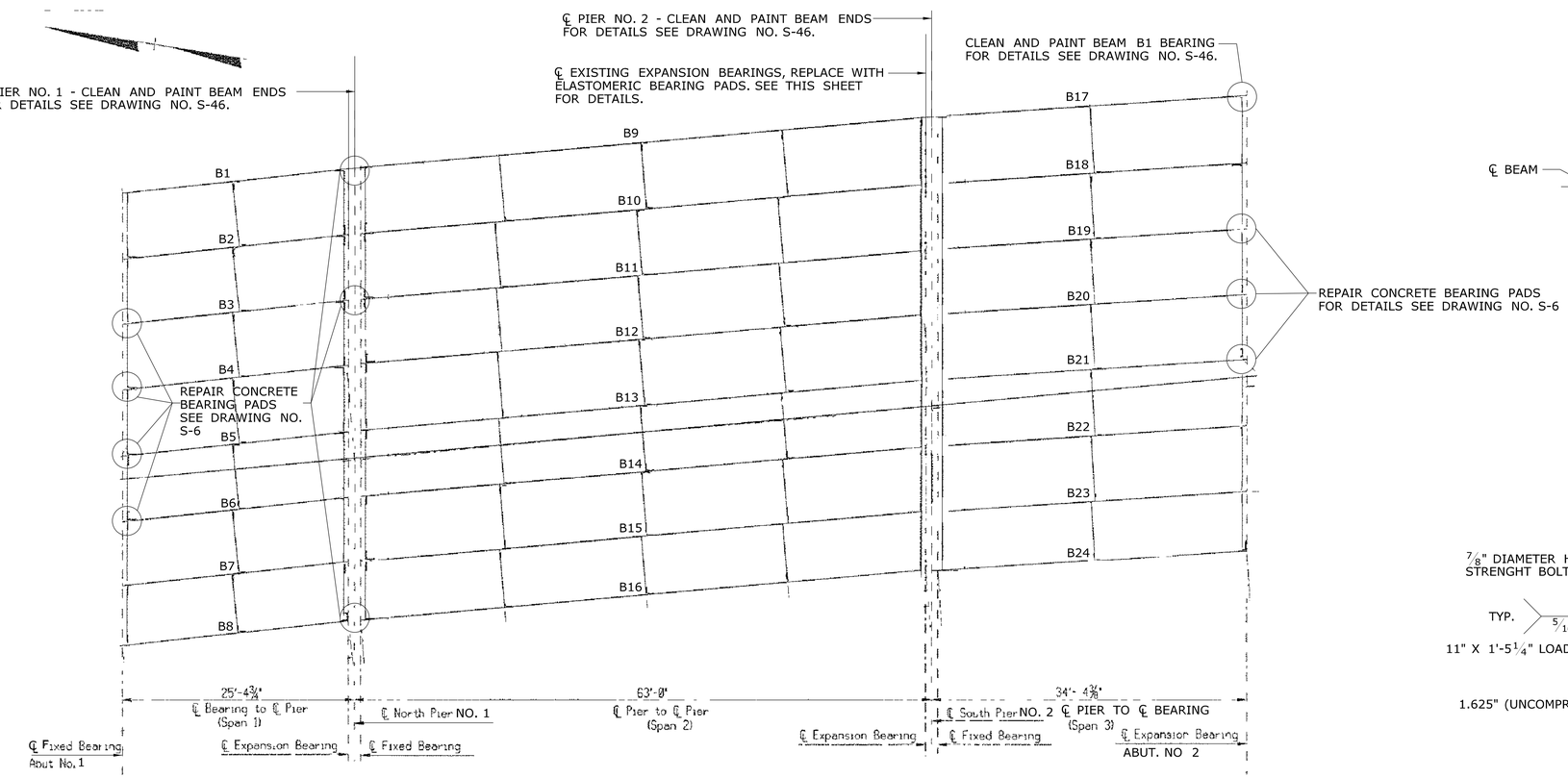

FRAMING PLAN
BRIDGE NO. 00629
Scale ⅛"=1'-0"

BEAM SCHEDULES	
B1, B8, B17, B24	W33 X 130
B2 - B7	W27 X 94
B9, B16	W33 X 200
B10 - B15	W33 X 152
B18 - B23	W30 X 116

BEAM REACTIONS (KIPS)			
MARK NO.	D.L.	S.D.L.	LL + I
B1 - B24	38	14	76

BEAM REACTION NOTES:

1. THE GIRDER REACTIONS HAVE BEEN PROVIDED FOR INFORMATION ONLY AND MAY BE USED TO DEVELOP DETAILS FOR JACKING THE SUPERSTRUCTURE.
2. THE DEAD LOAD REACTIONS ARE DUE TO THE STRUCTURAL STEEL AND CONCRETE SLAB.
3. THE SUPERIMPOSED DEAD LOAD REACTIONS ARE DUE TO THE PARAPETS AND BITUMINOUS CONCRETE OVERLAY.

EXISTING STRUCTURAL STEEL MATERIAL DESIGNATION:

STRUCTURAL STEEL: ASTM A 373

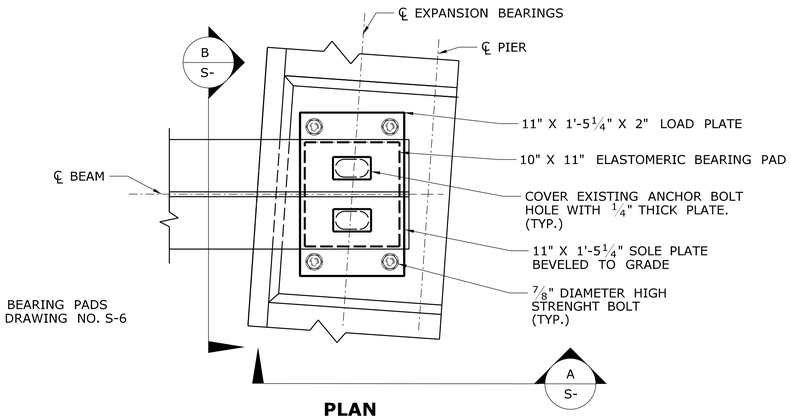

PLAN
SCALE: 1½"=1'-0"

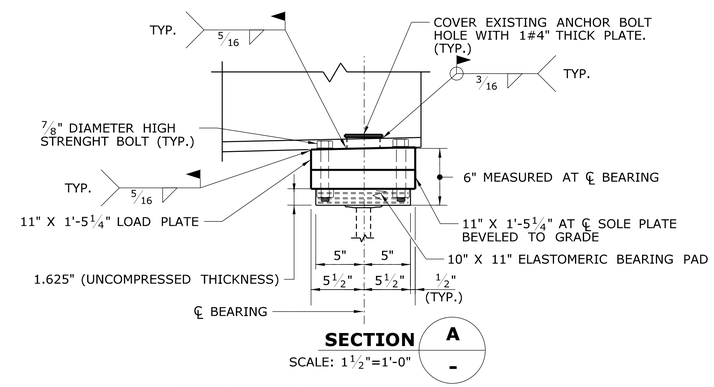

SECTION A
SCALE: 1½"=1'-0"

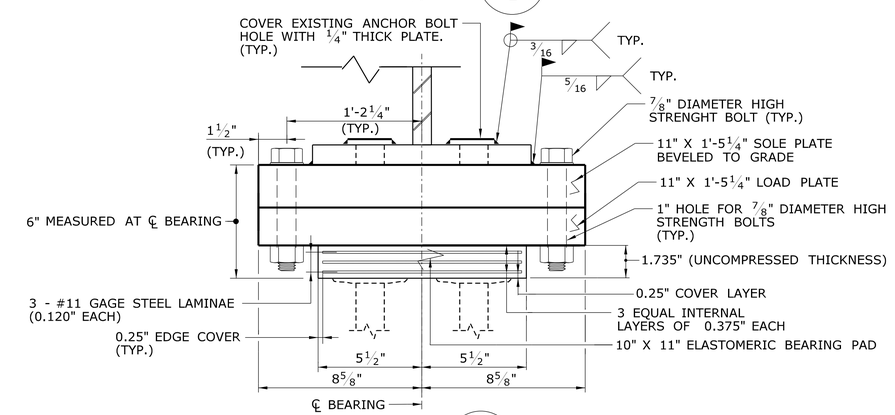

SECTION B
SCALE: 3"=1'-0"

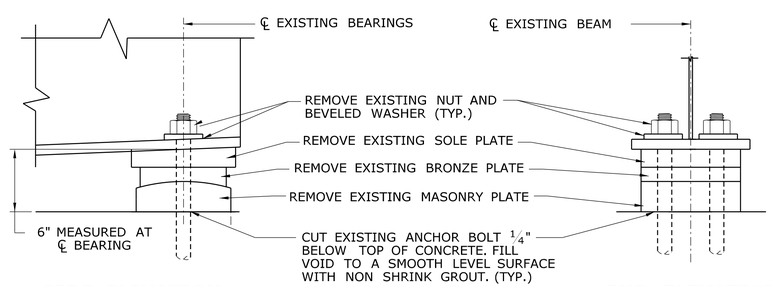

SIDE ELEVATION **END ELEVATION**

EXISTING EXPANSION BEARING DETAILS
SCALE: 1½" =1'-0"

PROPOSED EXPANSION BEARING DETAILS AT PIER NO. 2

NOTES:
WORK INVOLVING JACKING THE EXISTING SUPERSTRUCTURE TO BE PAID FOR UNDER THE ITEM "JACKING FOR BEARING REPLACEMENT".
WORK INVOLVING THE REMOVAL OF THE EXISTING BEARING TO BE PAID FOR UNDER THE ITEM "BEARING REPLACEMENT WITH ELASTOMERIC BEARING PADS".
FOR ADDITIONAL NOTES SEE "EXPANSION BEARING NOTES" ON DRAWING NO. S-2.

REV.	DATE	REVISION DESCRIPTION	SHEET NO.
-	-	-	-
-	-	-	-
-	-	-	-
-	-	-	-
-	-	-	-
-	-	-	-

THE INFORMATION, INCLUDING ESTIMATED QUANTITIES OF WORK, SHOWN ON THESE SHEETS IS BASED ON LIMITED INVESTIGATIONS BY THE STATE AND IS IN NO WAY WARRANTED TO INDICATE THE CONDITIONS OF ACTUAL QUANTITIES OF WORK WHICH WILL BE REQUIRED.

Plotted Date: 1/2/2013

DESIGNER/DRAFTER: BU
CHECKED BY: JCM
SCALE AS NOTED

STATE OF CONNECTICUT
DEPARTMENT OF TRANSPORTATION

Filename: ...\SB_MSH_BR00629_S45_FRAMING_PLAN_AND_PROPOSED_BEARING_DETAILS.dgn

SIGNATURE/BLOCK: OFFICE OF ENGINEERING
APPROVED BY:

PROJECT TITLE: BEAM END AND BEARING REPAIRS IN DISTRICT 1

TOWN: MIDDLETOWN
DRAWING TITLE: BRIDGE NO. 00629 FRAMING PLAN AND BEARING DETAILS

PROJECT NO. 171-359
DRAWING NO. S-45
SHEET NO. 03.45

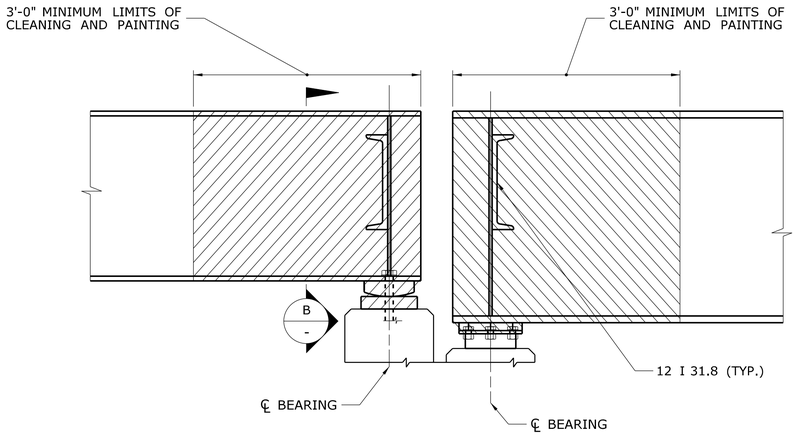

ELEVATION

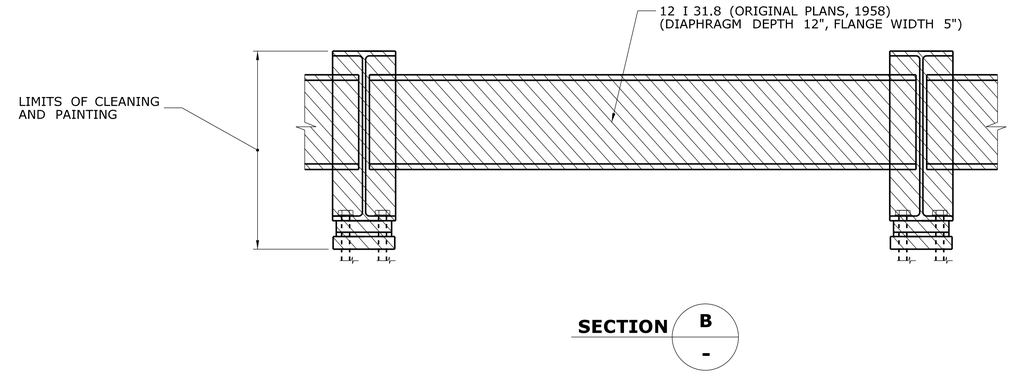

TYPICAL LIMITS OF CLEANING AND PAINTING

SCALE: 1" = 1'-0"

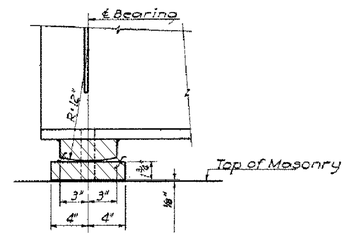

ELEVATION

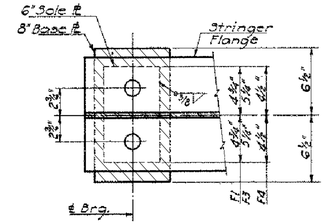

PLAN

CLEAN AND PAINT LIMITS FOR BEAM 1 AT ABUTMENT 2

SCALE: $1\frac{1}{2}$" = 1'-0"

DENOTES LIMITS OF CLEANING AND PAINTING OF BEAM ENDS AND BEARINGS. THIS WORK TO BE INCLUDED FOR PAYMENT UNDER THE ITEM "LOCALIZED PAINT REMOVAL AND FIELD PAINTING OF EXISTING STEEL (SITE NO. 12)".

FOR NOTES SEE "PAINTING NOTES" ON DRAWING NO. S-2.

REV.	DATE	REVISION DESCRIPTION	SHEET NO.
-	-	-	-
-	-	-	-
-	-	-	-
-	-	-	-
-	-	-	-
-	-	-	-

THE INFORMATION, INCLUDING ESTIMATED QUANTITIES OF WORK, SHOWN ON THESE SHEETS IS BASED ON LIMITED INVESTIGATIONS BY THE STATE AND IS IN NO WAY WARRANTED TO INDICATE THE CONDITIONS OF ACTUAL QUANTITIES OF WORK WHICH WILL BE REQUIRED.

Plotted Date: 1/2/2013

DESIGNER/DRAFTER: **BU**

CHECKED BY: **JCM**

SCALE AS NOTED

STATE OF CONNECTICUT
DEPARTMENT OF TRANSPORTATION

Filename: ...\SB_MSH_BR00629_S46_CLEAN_AND_PAINT_DETAILS.dgn

SIGNATURE/ BLOCK:

OFFICE OF ENGINEERING

APPROVED BY:

PROJECT TITLE:

BEAM END AND BEARING REPAIRS IN DISTRICT 1

TOWN: **MIDDLETOWN**

DRAWING TITLE: **BRIDGE NO. 00629 CLEAN AND PAINT DETAILS**

PROJECT NO. **171-359**

DRAWING NO. **S-46**

SHEET NO. 03.46

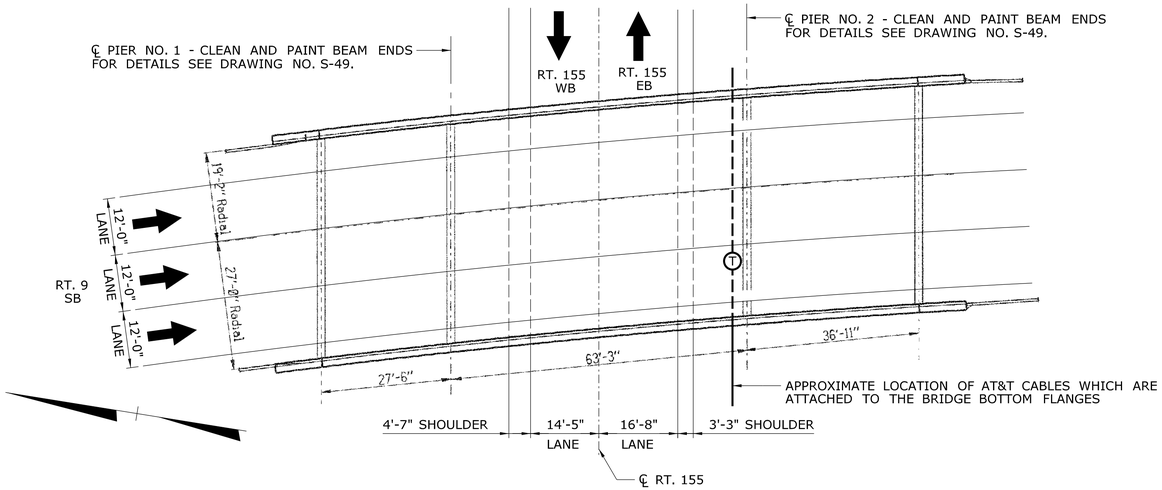

FOR LOCATIONS OF STEEL REPAIRS SEE DRAWING NO. S-48.

GENERAL PLAN - BRIDGE NO. 00630, RT. 9 S.B. OVER RT. 155

SCALE: 1/16" = 1'-0"

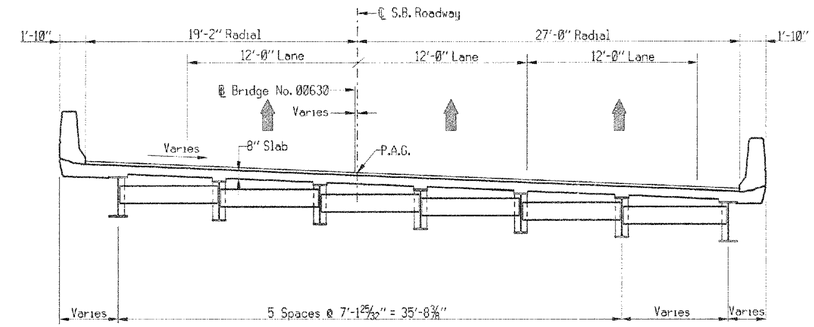

TYPICAL CROSS SECTION

SCALE: 3/16" = 1'-0"

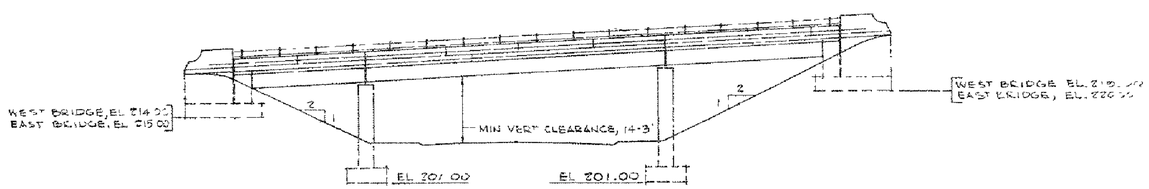

ELEVATION

SCALE: 1/16" = 1'-0"

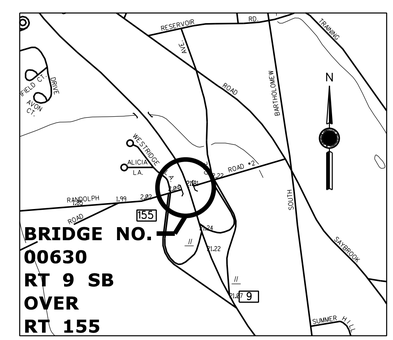

LOCATION PLAN

SCALE
0 1000 FT

REV.	DATE	REVISION DESCRIPTION	SHEET NO.
-	-	-	-
-	-	-	-
-	-	-	-
-	-	-	-
-	-	-	-
-	-	-	-

THE INFORMATION, INCLUDING ESTIMATED QUANTITIES OF WORK, SHOWN ON THESE SHEETS IS BASED ON LIMITED INVESTIGATIONS BY THE STATE AND IS IN NO WAY WARRANTED TO INDICATE THE CONDITIONS OF ACTUAL QUANTITIES OF WORK WHICH WILL BE REQUIRED.

Plotted Date: 1/2/2013

DESIGNER/DRAFTER: TDC
CHECKED BY: JCM
SCALE AS NOTED

STATE OF CONNECTICUT
DEPARTMENT OF TRANSPORTATION

Filename: ...\SB_MSH_BR00630_S47_GENERAL_PLAN.dgn

SIGNATURE/ BLOCK:
OFFICE OF ENGINEERING
APPROVED BY:

PROJECT TITLE:
BEAM END
AND BEARING REPAIRS
IN DISTRICT 1

TOWN: MIDDLETOWN
DRAWING TITLE: BRIDGE NO. 00630 GENERAL PLAN

PROJECT NO. 171-359
DRAWING NO. S-47
SHEET NO. 03.47

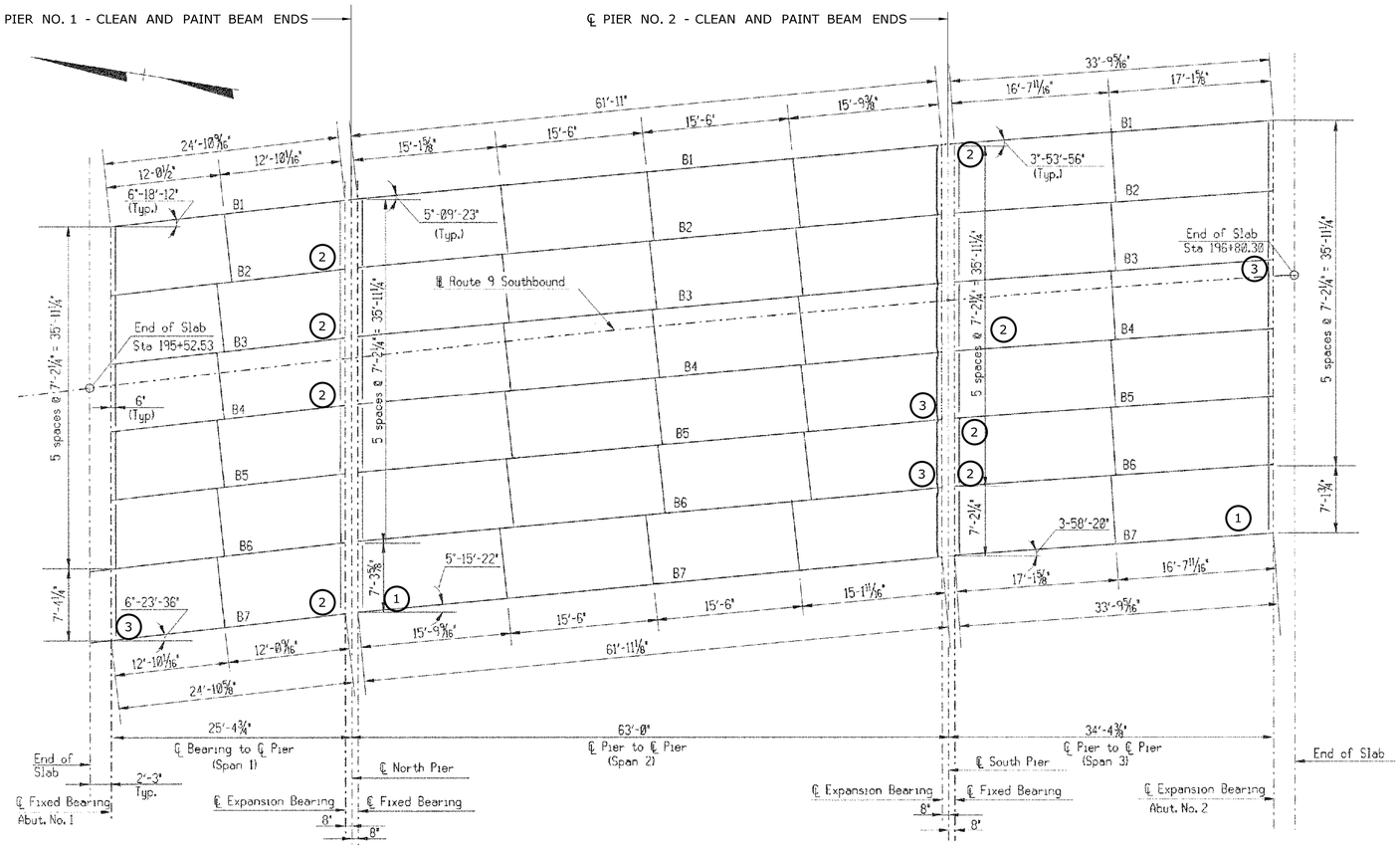

PLAN - BRIDGE NO. 00630, ROUTE 9 SOUTHBOUND OVER ROUTE 155

SCALE: 1/8" = 1'-0"

EXISTING STRUCTURAL STEEL MATERIAL DESIGNATION:

STRUCTURAL STEEL: ASTM A 373

1. PLATE AREA OF SECTION LOSS IN WEB WITH 3/4" PLATE. FOR DETAILS SEE DRAWING NOS. S-3 THROUGH S-5
2. REPAIR MISSING OR HEAVILY RUSTED ANCHOR BOLTS WITH SEVERE SECTION LOSS. SEE DRAWING NO. S-6.
3. REPAIR CONCRETE BEARING PADS. FOR DETAILS SEE DRAWING NO. S-6

BEAM SCHEDULES	
B1, B8, B17, B24	W33 X 130
B2 - B7	W27 X 94
B9, B16	W33 X 200
B10 - B15	W33 X 152
B18 - B23	W30 X 116

REV.	DATE	REVISION DESCRIPTION	SHEET NO.
-	-	-	-
-	-	-	-
-	-	-	-
-	-	-	-
-	-	-	-
-	-	-	-

THE INFORMATION, INCLUDING ESTIMATED QUANTITIES OF WORK, SHOWN ON THESE SHEETS IS BASED ON LIMITED INVESTIGATIONS BY THE STATE AND IS IN NO WAY WARRANTED TO INDICATE THE CONDITIONS OF ACTUAL QUANTITIES OF WORK WHICH WILL BE REQUIRED.

Plotted Date: 1/2/2013

DESIGNER/DRAFTER: TDC

CHECKED BY: JCM

SCALE AS NOTED

STATE OF CONNECTICUT
DEPARTMENT OF TRANSPORTATION

Filename: ...\SB_MSH_BR00630_S48_FRAMING_PLAN.dgn

SIGNATURE/BLOCK:
OFFICE OF ENGINEERING

APPROVED BY:

PROJECT TITLE:
BEAM END AND BEARING REPAIRS IN DISTRICT 1

TOWN: MIDDLETOWN

DRAWING TITLE: BRIDGE NO. 00630 FRAMING PLAN

PROJECT NO. 171-359

DRAWING NO. S-48

SHEET NO. 03.48

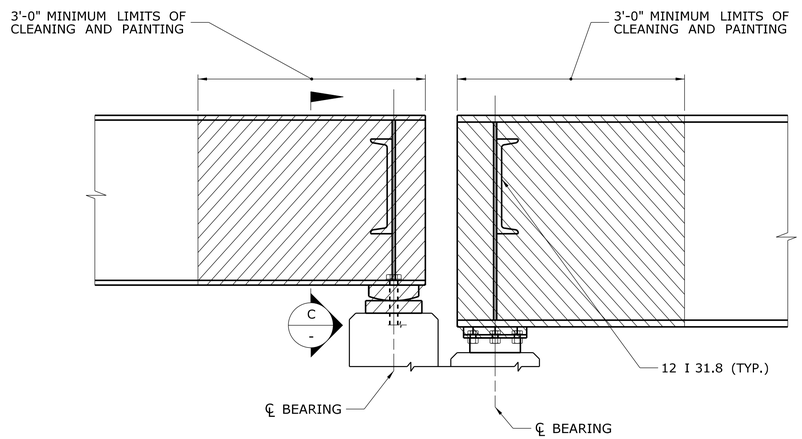

ELEVATION

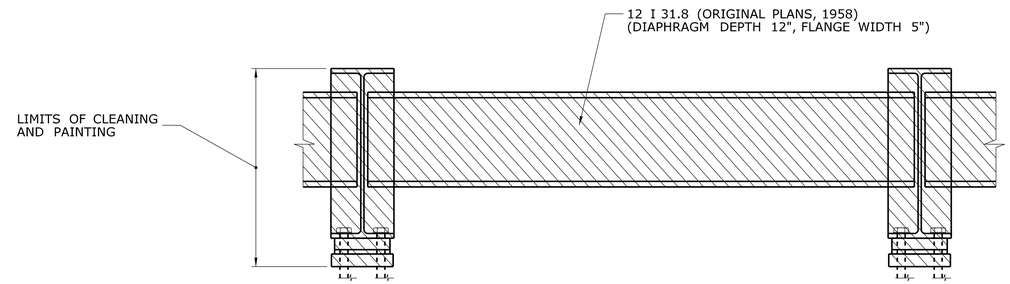

SECTION C / -

TYPICAL LIMITS OF CLEANING AND PAINTING

SCALE: 1" = 1'-0"

DENOTES LIMITS OF CLEANING AND PAINTING OF BEAM ENDS AND BEARINGS. THIS WORK TO BE INCLUDED FOR PAYMENT UNDER THE ITEM "LOCALIZED PAINT REMOVAL AND FIELD PAINTING OF EXISTING STEEL (SITE NO. 13)".

FOR NOTES SEE "PAINTING NOTES" ON DRAWING NO. S-2.

REV.	DATE	REVISION DESCRIPTION	SHEET NO.
-	-	-	-
-	-	-	-
-	-	-	-
-	-	-	-
-	-	-	-
-	-	-	-

THE INFORMATION, INCLUDING ESTIMATED QUANTITIES OF WORK, SHOWN ON THESE SHEETS IS BASED ON LIMITED INVESTIGATIONS BY THE STATE AND IS IN NO WAY WARRANTED TO INDICATE THE CONDITIONS OF ACTUAL QUANTITIES OF WORK WHICH WILL BE REQUIRED.

Plotted Date: 1/2/2013

DESIGNER/DRAFTER: TDC

CHECKED BY: JCM

SCALE AS NOTED

STATE OF CONNECTICUT
DEPARTMENT OF TRANSPORTATION

Filename: ...\SB_MSH_BR00630_S49_CLEAN_AND_PAINT_DETAILS.dgn

SIGNATURE/ BLOCK:

OFFICE OF ENGINEERING

APPROVED BY:

PROJECT TITLE:

BEAM END AND BEARING REPAIRS IN DISTRICT 1

TOWN: MIDDLETOWN

DRAWING TITLE: BRIDGE NO. 00630 CLEAN AND PAINT DETAILS

PROJECT NO. 171-359

DRAWING NO. S-49

SHEET NO. 03.49

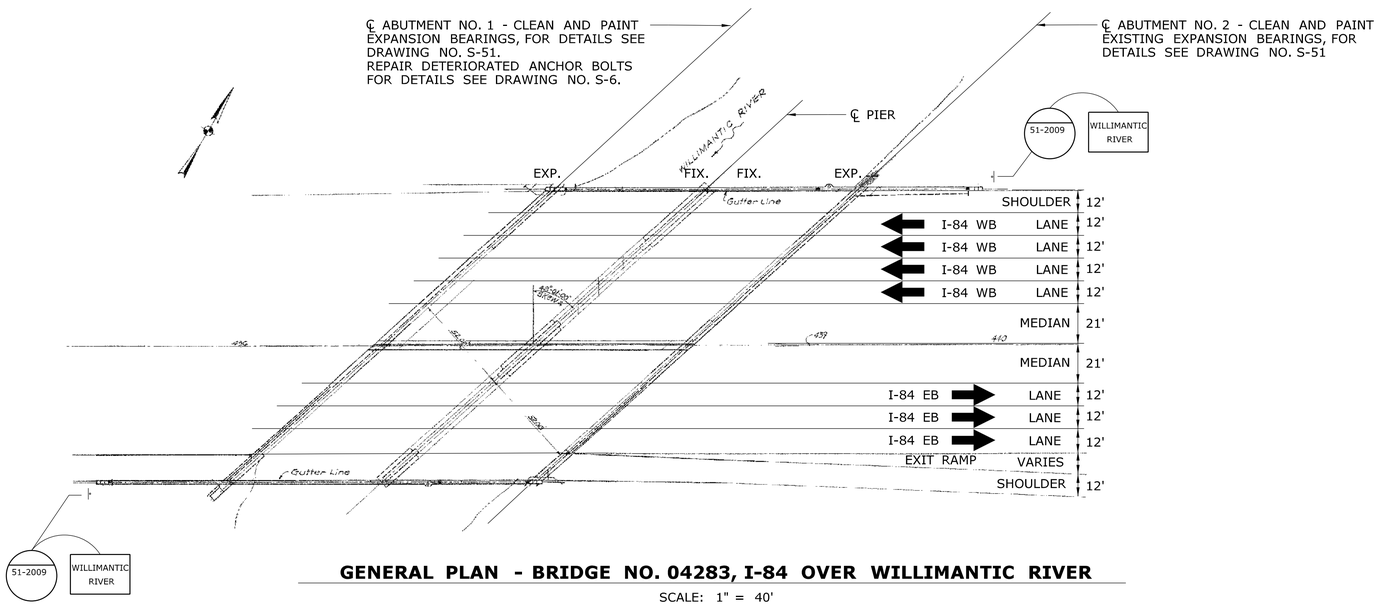

GENERAL PLAN - BRIDGE NO. 04283, I-84 OVER WILLIMANTIC RIVER

SCALE: 1" = 40'

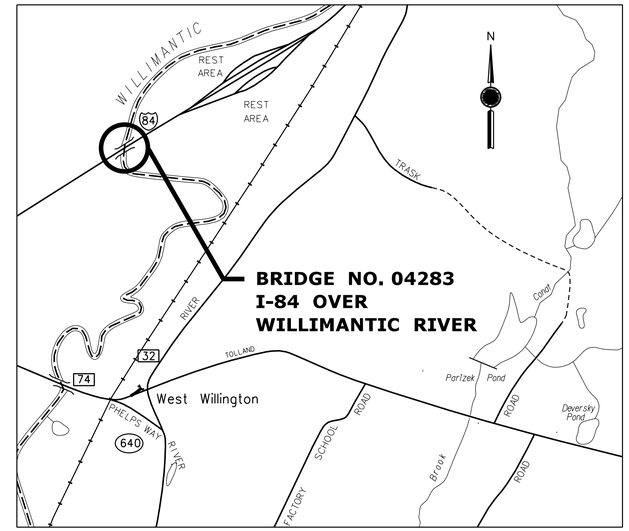

LOCATION PLAN

SCALE
0 1000 FT

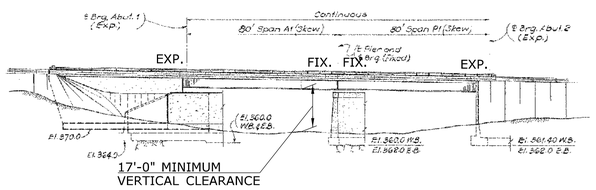

ELEVATION

SCALE: 1" = 40'

NOTES:
1. REPAIR ANCHOR BOLTS IN VARIOUS LOCATION AT ABUTMENT NO. 1, FOR LOCATIONS SEE FRAMING PLAN ON DRAWING NO. S-51.
2. EXTEND WEEP PIPES. FOR LOCATIONS SEE FRAMING PLAN ON DRAWING NO. S-51.

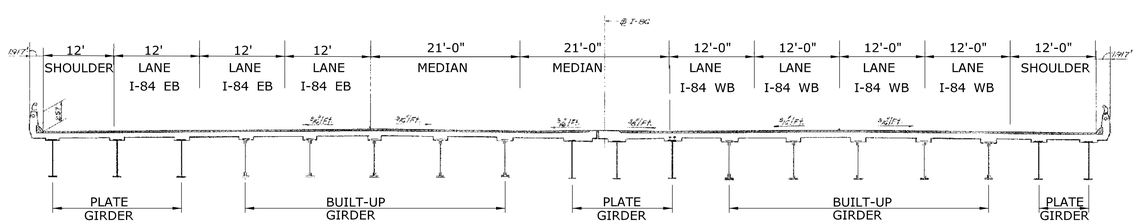

TYPICAL CROSS SECTION

SCALE: 3/32" = 1'-0"

NOTE: THE CONTRACTOR IS HEREBY NOTIFIED THAT ALL CONSTRUCTION ACTIVITIES ASSOCIATED WITH BRIDGE NO. 04283 IS PROHOBITIED FROM 12:01 A.M. ON THE MONDAY PRECEDING THE THIRD SATURDAY IN APRIL THROUGH 12:00 A.M. ON THE SUNDAY PRECEDING THE FOURTH SATURDAY IN APRIL.

REV.	DATE	REVISION DESCRIPTION	SHEET NO.
-	-	-	-
-	-	-	-
-	-	-	-
-	-	-	-
-	-	-	-
-	-	-	-

THE INFORMATION, INCLUDING ESTIMATED QUANTITIES OF WORK, SHOWN ON THESE SHEETS IS BASED ON LIMITED INVESTIGATIONS BY THE STATE AND IS IN NO WAY WARRANTED TO INDICATE THE CONDITIONS OF ACTUAL QUANTITIES OF WORK WHICH WILL BE REQUIRED.

Plotted Date: 1/2/2013

DESIGNER/DRAFTER: BU
CHECKED BY: JCM
SCALE AS NOTED

STATE OF CONNECTICUT
DEPARTMENT OF TRANSPORTATION

Filename: ...\SB_MSH_BR04283_S50_GENERAL_PLAN.dgn

SIGNATURE/BLOCK:
OFFICE OF ENGINEERING
APPROVED BY:

PROJECT TITLE:
BEAM END
AND BEARING REPAIRS
IN DISTRICT 1

TOWN: WILLINGTON
DRAWING TITLE: BRIDGE NO. 04283 GENERAL PLAN

PROJECT NO. 171-359
DRAWING NO. S-50
SHEET NO. 03.50

BEAM REACTIONS (KIPS)			
MARK NO.	D.L.	S.D.L.	LL + I
A1-1 - A1-18	19.54	10.46	72.36

EXISTING STRUCTURAL STEEL MATERIAL DESIGNATIONS:

STRUCTUAL STEEL: ASTM A 36
STEEL IN BEARINGS: ASTM A 588

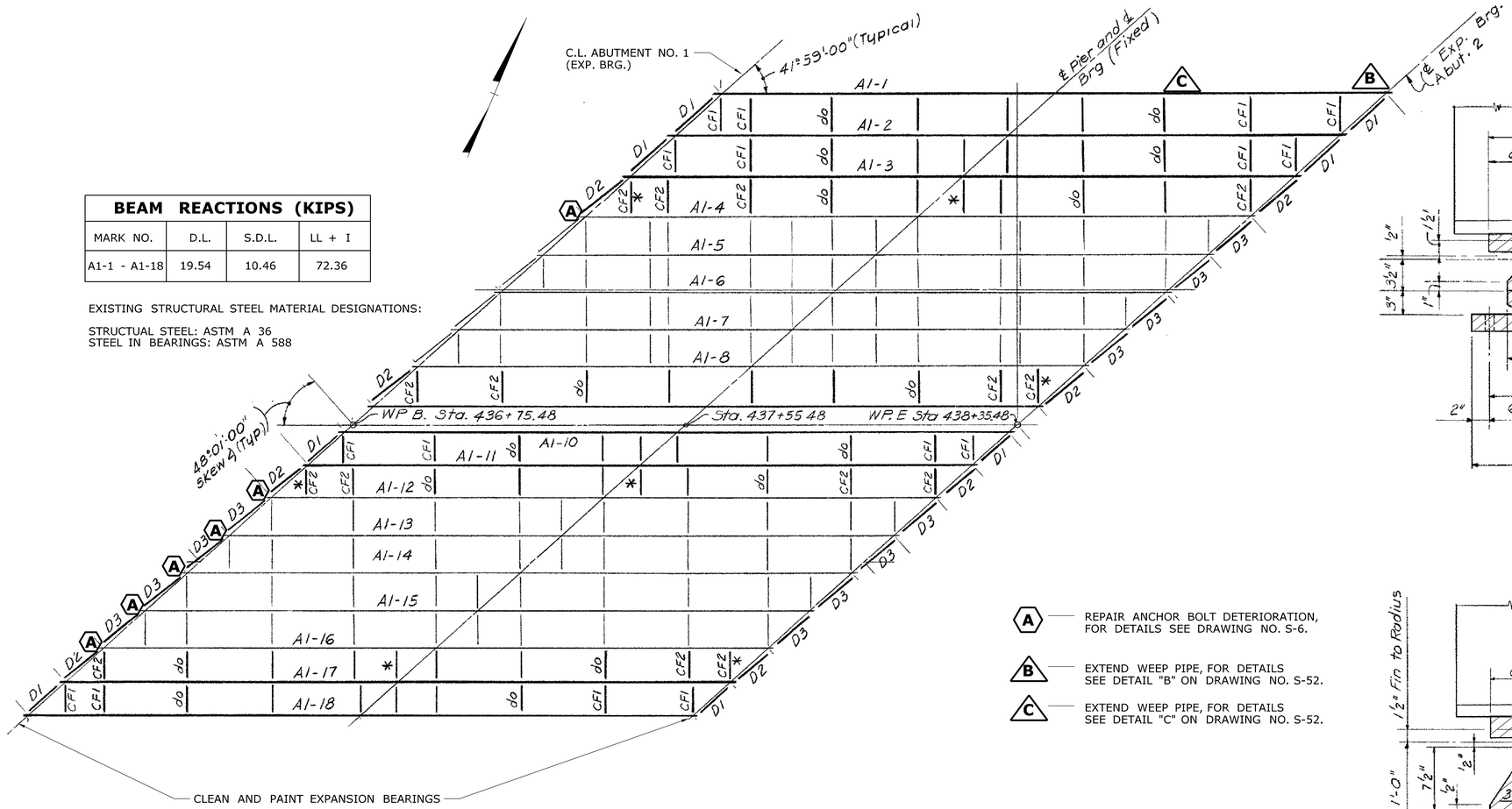

FRAMING PLAN

Scale: 1/16" = 1'-0"

A — REPAIR ANCHOR BOLT DETERIORATION, FOR DETAILS SEE DRAWING NO. S-6.

B — EXTEND WEEP PIPE, FOR DETAILS SEE DETAIL "B" ON DRAWING NO. S-52.

C — EXTEND WEEP PIPE, FOR DETAILS SEE DETAIL "C" ON DRAWING NO. S-52.

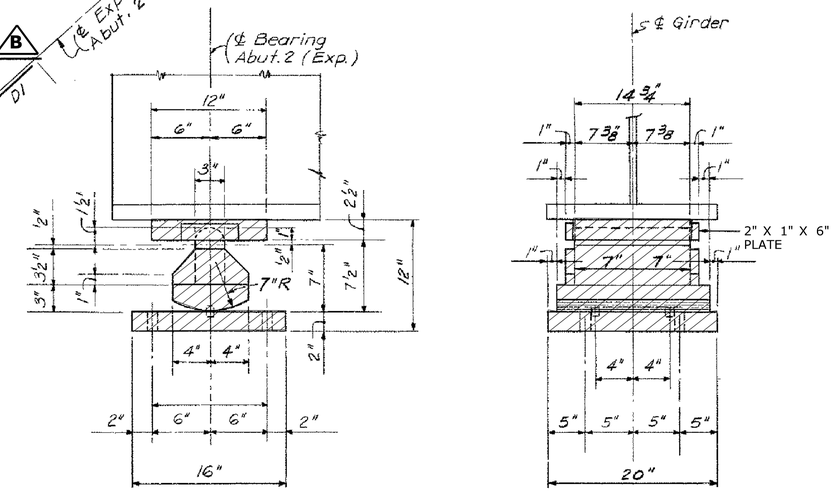

EXPANSION BEARINGS AT EAST ABUTMENT (ABUTMENT NO. 2)

SCALE: 1½" = 1'-0"

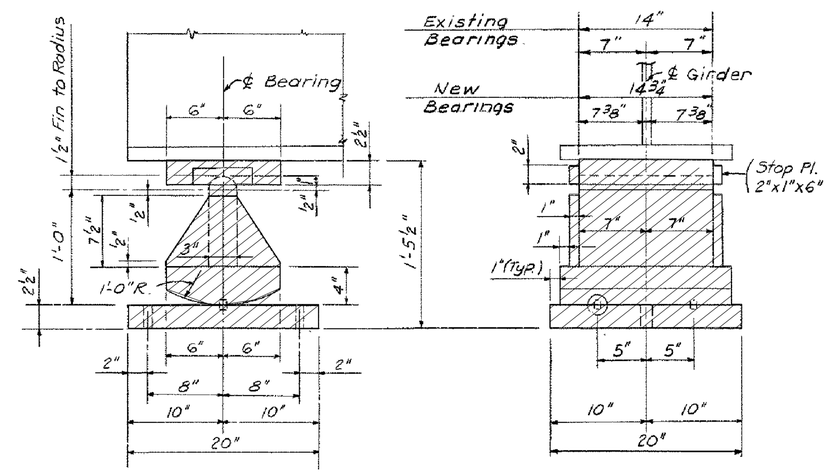

EXPANSION BEARINGS AT WEST ABUTMENT (ABUTMENT NO. 1)

SCALE: 1½" = 1'-0"

DONATES LIMITS OF CLEANING AND PAINTING OF EXPANSION BEARINGS. THIS WORK TO BE PAID FOR UNDER THE ITEM "LOCALIZED PAINT REMOVAL AND FIELD PAINTING OF EXISTING STEEL (SITE NO. 15)".

NOTE: BEARING DETAILS SHOWN FOR INFORMATION ONLY.

FOR NOTES SEE " PAINTING NOTES" ON DRAWING NO. S-2.

REV.	DATE	REVISION DESCRIPTION	SHEET NO.
-	-	-	-
-	-	-	-
-	-	-	-
-	-	-	-
-	-	-	-
-	-	-	-

THE INFORMATION, INCLUDING ESTIMATED QUANTITIES OF WORK, SHOWN ON THESE SHEETS IS BASED ON LIMITED INVESTIGATIONS BY THE STATE AND IS IN NO WAY WARRANTED TO INDICATE THE CONDITIONS OF ACTUAL QUANTITIES OF WORK WHICH WILL BE REQUIRED.

Plotted Date: 1/2/2013

DESIGNER/DRAFTER: BU
CHECKED BY: JCM
SCALE AS NOTED

STATE OF CONNECTICUT
DEPARTMENT OF TRANSPORTATION

Filename: ...\SB_MSH_BR04283_S51_FRAMING_PLAN_AND_CLEAN_AND_PAINT_DETAILS.dgn

SIGNATURE/BLOCK: OFFICE OF ENGINEERING
APPROVED BY:

PROJECT TITLE: BEAM END AND BEARING REPAIRS IN DISTRICT 1

TOWN: WILLINGTON

DRAWING TITLE: BRIDGE NO. 04283 FRAMING PLAN AND CLEAN AND PAINT DETAILS

PROJECT NO. 171-359
DRAWING NO. S-51
SHEET NO. 03.51

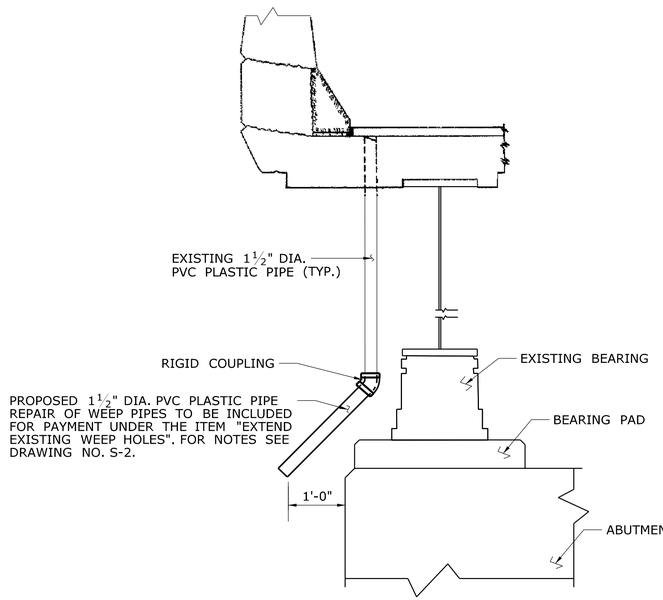

DETAIL B

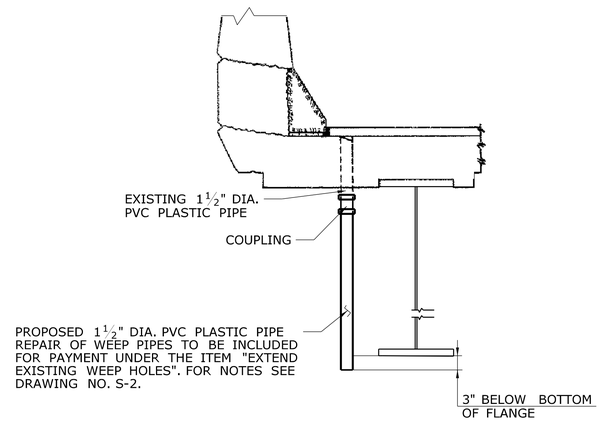

DETAIL C

EXTEND WEEP PIPE DETAILS

SCALE: ¾" = 1'

FOR NOTES SEE "WEEP PIPE NOTES" ON DRAWING NO. S-2.

REV.	DATE	REVISION DESCRIPTION	SHEET NO.
-	-	-	-
-	-	-	-
-	-	-	-
-	-	-	-
-	-	-	-
-	-	-	-

THE INFORMATION, INCLUDING ESTIMATED QUANTITIES OF WORK, SHOWN ON THESE SHEETS IS BASED ON LIMITED INVESTIGATIONS BY THE STATE AND IS IN NO WAY WARRANTED TO INDICATE THE CONDITIONS OF ACTUAL QUANTITIES OF WORK WHICH WILL BE REQUIRED.

Plotted Date: 1/2/2013

DESIGNER/DRAFTER: BU

CHECKED BY: JMC

SCALE AS NOTED

STATE OF CONNECTICUT
DEPARTMENT OF TRANSPORTATION

Filename: ...\SB_MSH_BR04283_S52_WEEP_PIPE_DETAILS.dgn

SIGNATURE/ BLOCK:

OFFICE OF ENGINEERING

APPROVED BY:

PROJECT TITLE:

BEAM END
AND BEARING REPAIRS
IN DISTRICT 1

TOWN: WILLINGTON

DRAWING TITLE: BRIDGE NO. 04283
WEEP PIPE
DETAILS

PROJECT NO. 171-359

DRAWING NO. S-52

SHEET NO. 03.52

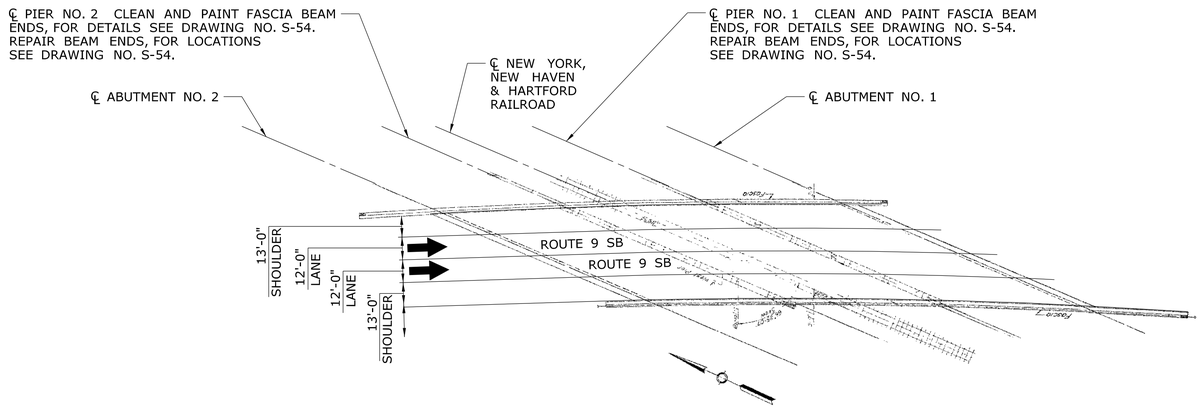

GENERAL PLAN - BRIDGE NO. 03519, RT. 9 SB OVER P&W RAILROAD

SCALE: 1" = 40'

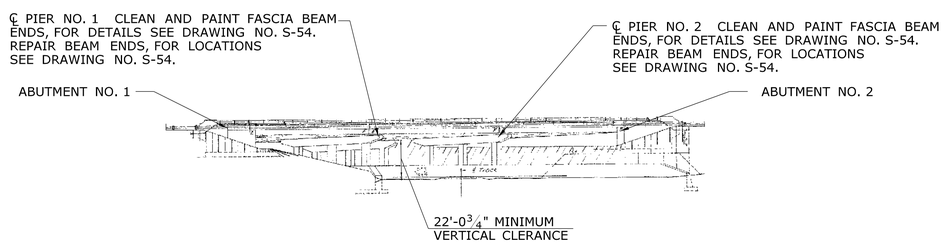

EAST ELEVATION

SCALE: 1" = 40'

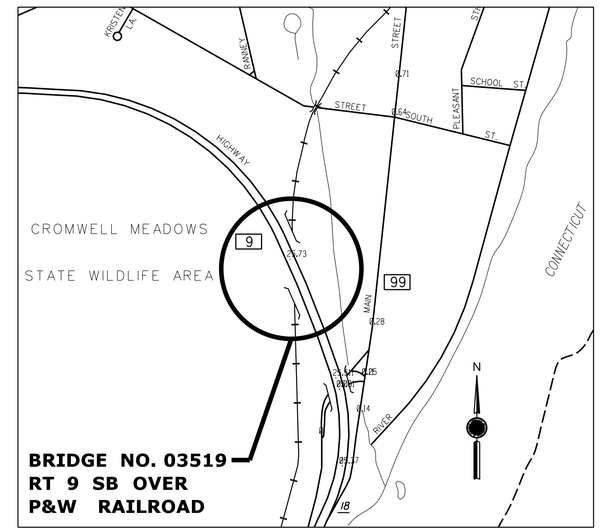

LOCATION PLAN

SCALE
0 1000 FT

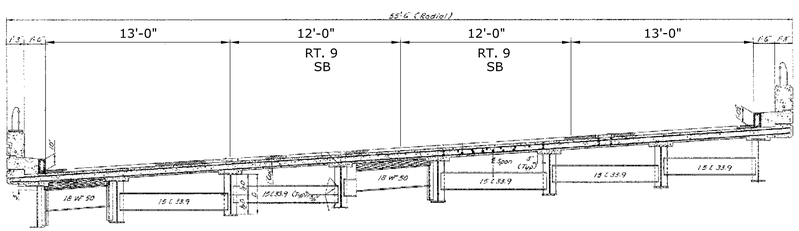

TYPICAL CROSS SECTION

SCALE: 3/16" = 1'-0"

NOTE: SEE FRAMING PLAN ON DRAWING NO. S-53 FOR ADDITIONAL WORK.

REV.	DATE	REVISION DESCRIPTION	SHEET NO.
-	-	-	-
-	-	-	-
-	-	-	-
-	-	-	-
-	-	-	-
-	-	-	-

THE INFORMATION, INCLUDING ESTIMATED QUANTITIES OF WORK, SHOWN ON THESE SHEETS IS BASED ON LIMITED INVESTIGATIONS BY THE STATE AND IS IN NO WAY WARRANTED TO INDICATE THE CONDITIONS OF ACTUAL QUANTITIES OF WORK WHICH WILL BE REQUIRED.

Plotted Date: 1/2/2013

DESIGNER/DRAFTER: TDC
CHECKED BY: JCM
SCALE AS NOTED

STATE OF CONNECTICUT
DEPARTMENT OF TRANSPORTATION

Filename: ...\SB_MSH_BR03519_S53_GENERAL_PLAN.dgn

SIGNATURE/ BLOCK:
OFFICE OF ENGINEERING
APPROVED BY:

PROJECT TITLE:
BEAM END AND BEARING REPAIRS IN DISTRICT 1

TOWN: CROMWELL
DRAWING TITLE: BRIDGE NO. 03519 GENERAL PLAN

PROJECT NO. 171-359
DRAWING NO. S-53
SHEET NO. 03.53

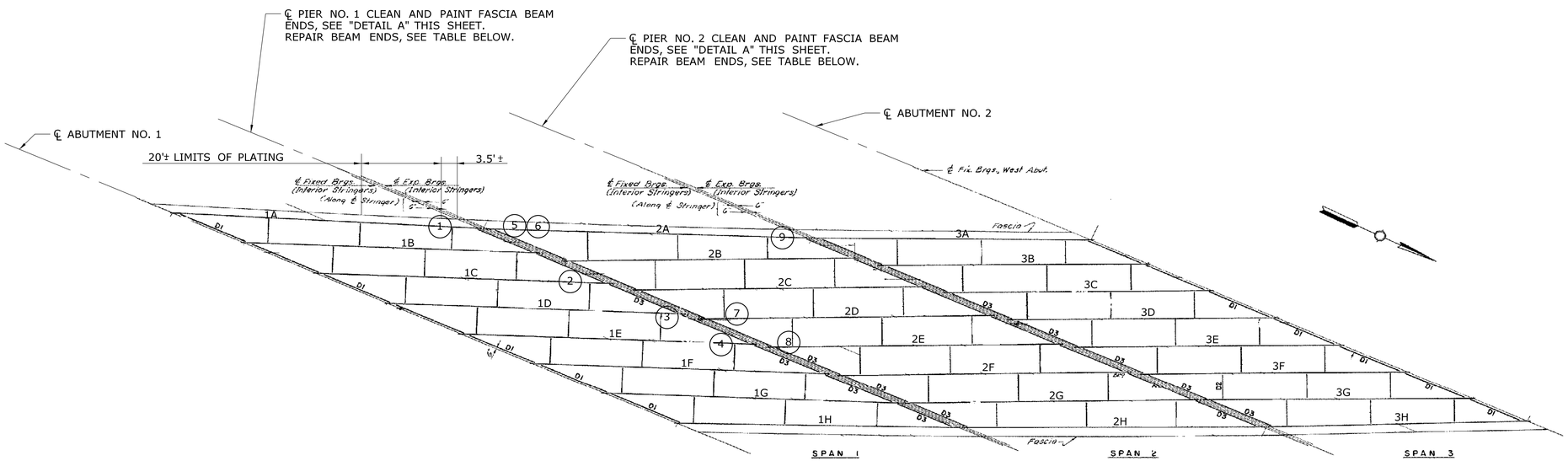

BEAM	STRINGER SIZE	STRINGER LENGTH ℄ TO ℄ BRG.
1A	36 WF 160	77' - 8 3/8"
1B - 1G	36 WF 160	74' - 4 1/2"
1H	36 WF 150	71' - 1"
2A	36 WF 230	81' - 3"
2B - 2G	36 WF 170	73' - 7 1/16"
2H	36 WF 160	75' - 0 3/8"
3A	36 WF 150	69' - 6 3/16"
3B - 3G	36 WF 150	67' - 1 3/8"
3H	36 WF 135	64' - 9 3/4"

EXISTING STRUCTURAL STEEL MATERIAL DESIGNATIONS:

STRUCTURAL STEEL: ASTM A 36-62T
MASONRY PLATES: ASTM A 242

PLAN - SITE NO. 17 BRIDGE NO. 03519, RT. 9 SB OVER P&W RAILROAD

SCALE: 1/16" = 1'-0"

LOCATION SYMBOL	DESCRIPTION OF WORK	REPAIR AREA
1	PLATE BOTTOM OF WEB STARTING 3.5 FT FROM END OVER PIER 1 (WEST FACE)	20'±L X 8"H X 7/16 "DP
2	PLATE BOTTOM OF WEB NEAR PIER 1 (WEST FACE)	15"L X 11"H X 3/16 "DP
3	PLATE BOTTOM OF WEB NEAR PIER 1 (EAST FACE)	2.5'L X 10"H X 3/16 "DP
4	PLATE BOTTOM OF WEB NEAR PIER 1 (EAST FACE)	33"L X 6"H X 1/4"DP
5	PLATE BOTTOM OF WEB NEAR PIER 1 (EAST FACE)	20"L X 4"H X 3/16 "DP
6	REMOVE DETERIORATED PORTION OF BOTTOM OF CONNECTION PLATE NEAR PIER 1	
7	PLATE BOTTOM OF WEB NEAR PIER 1 (EAST FACE)	1.5' H X 1.0'H X 3/16 "DP
8	PLATE BOTTOM OF WEB NEAR PIER 1 (WEST FACE)	3'L X 6"H X 1/4"DP
9	PLATE BOTTOM OF WEB NEAR PIER 2 (WEST FACE)	10" H X 3.5' L X 3/16 "-1/4"DP

FOR STRUCTURAL STEEL REPAIR DETAILS SEE DRAWING NOS. S-3 THROUGH S-5.

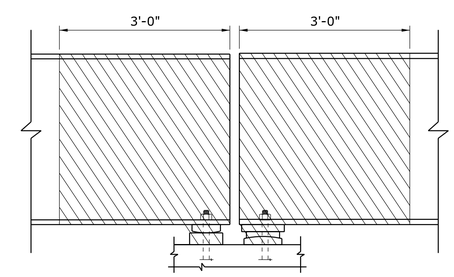

DETAIL A

SCALE: 3/4" = 1'-0"

DENOTES LIMITS OF CLEANING AND PAINTING OF BEAM ENDS AND BEARINGS. THIS WORK TO BE INCLUDED FOR PAYMENT FOR UNDER THE ITEM "LOCALIZED PAINT REMOVAL AND FIELD PAINTING OF EXISTING STEEL (SITE NO. 17)".

FOR NOTES SEE "PAINTING NOTES" ON DRAWING NO. S-2.

REV.	DATE	REVISION DESCRIPTION	SHEET NO.
-	-	-	-
-	-	-	-
-	-	-	-
-	-	-	-
-	-	-	-
-	-	-	-

THE INFORMATION, INCLUDING ESTIMATED QUANTITIES OF WORK, SHOWN ON THESE SHEETS IS BASED ON LIMITED INVESTIGATIONS BY THE STATE AND IS IN NO WAY WARRANTED TO INDICATE THE CONDITIONS OF ACTUAL QUANTITIES OF WORK WHICH WILL BE REQUIRED.

Plotted Date: 1/2/2013

DESIGNER/DRAFTER: TDC
CHECKED BY: JCM
SCALE AS NOTED

STATE OF CONNECTICUT
DEPARTMENT OF TRANSPORTATION

Filename: ...\SB_MSH_BR03519_S54_FRAMING_PLAN.dgn

SIGNATURE/ BLOCK:
OFFICE OF ENGINEERING
APPROVED BY:

PROJECT TITLE:
BEAM END AND BEARING REPAIRS DISTRICT 1

TOWN: CROMWELL
DRAWING TITLE: BRIDGE NO. 03519 FRAMING PLAN AND CLEAN AND PAINT DETAILS

PROJECT NO. 171-359
DRAWING NO. S-54
SHEET NO. 03.54

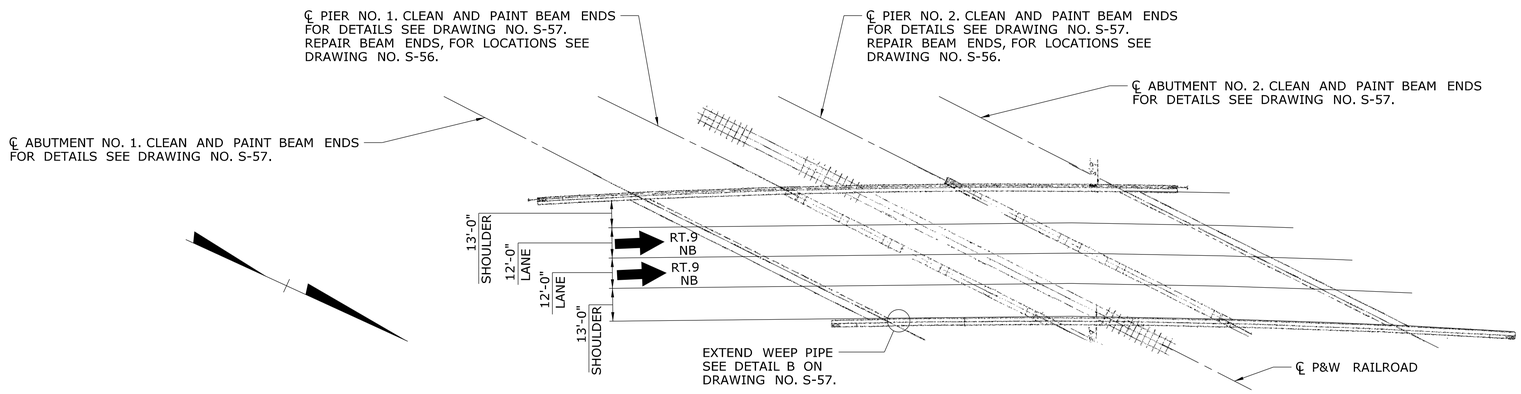

GENERAL PLAN - BRIDGE NO. 03520, RT. 9 NB OVER P&W RAILROAD

SCALE: 1" = 30'

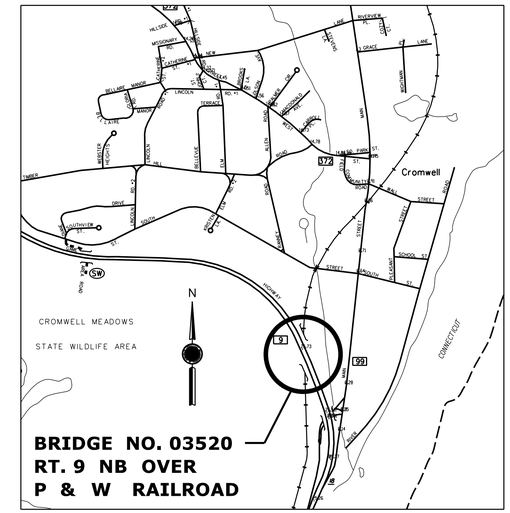

LOCATION PLAN

SCALE
0 1000 FT

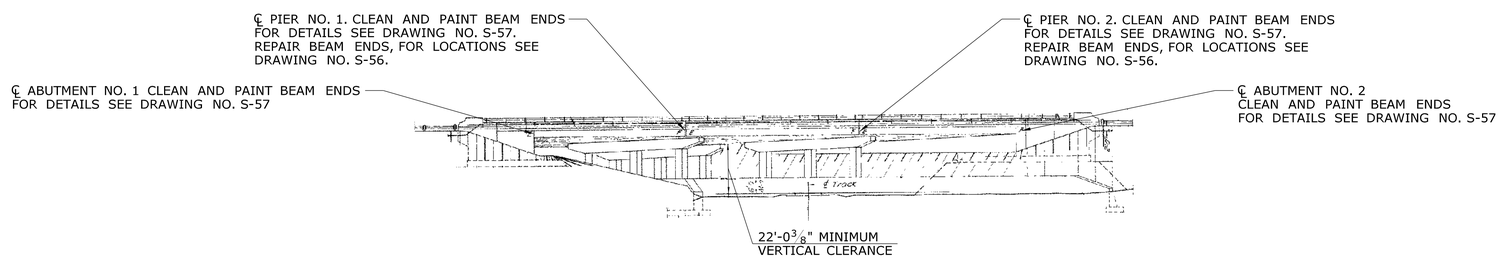

WEST ELEVATION

SCALE: 1" = 30'

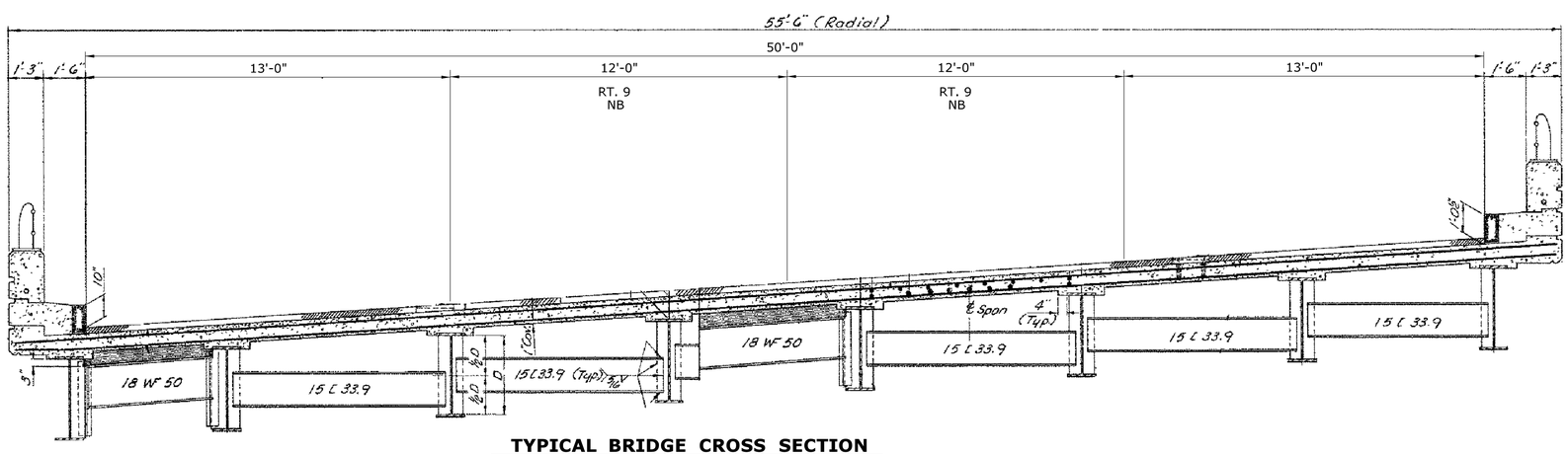

TYPICAL BRIDGE CROSS SECTION

SCALE: 3/16" = 1'-0"

REV.	DATE	REVISION DESCRIPTION	SHEET NO.
-	-	-	-
-	-	-	-
-	-	-	-
-	-	-	-
-	-	-	-
-	-	-	-

THE INFORMATION, INCLUDING ESTIMATED QUANTITIES OF WORK, SHOWN ON THESE SHEETS IS BASED ON LIMITED INVESTIGATIONS BY THE STATE AND IS IN NO WAY WARRANTED TO INDICATE THE CONDITIONS OF ACTUAL QUANTITIES OF WORK WHICH WILL BE REQUIRED.

Plotted Date: 1/2/2013

DESIGNER/DRAFTER: TDC
CHECKED BY: JCM
SCALE AS NOTED

STATE OF CONNECTICUT
DEPARTMENT OF TRANSPORTATION

Filename: ...\SB_MSH_BR03520_S55_GENERAL_PLAN.dgn

SIGNATURE/BLOCK:
OFFICE OF ENGINEERING
APPROVED BY:

PROJECT TITLE:
BEAM END
AND BEARING REPAIRS
IN DISTRICT 1

TOWN: CROMWELL

DRAWING TITLE:
BRIDGE NO. 03520
GENERAL PLAN

PROJECT NO. 171-359
DRAWING NO. S-55
SHEET NO. 03.55

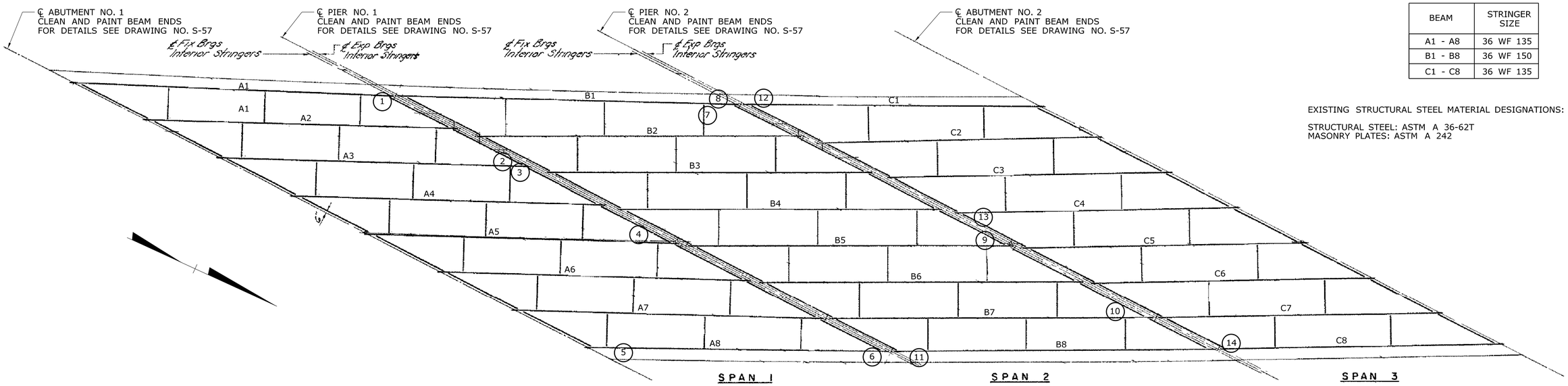

BEAM	STRINGER SIZE
A1 - A8	36 WF 135
B1 - B8	36 WF 150
C1 - C8	36 WF 135

EXISTING STRUCTURAL STEEL MATERIAL DESIGNATIONS:

STRUCTURAL STEEL: ASTM A 36-62T
MASONRY PLATES: ASTM A 242

FRAMING PLAN

SCALE: 1" = 10'

LOCATION SYMBOL	DESCRIPTION OF WORK	REPAIR AREA
1	PLATE BOTTOM OF WEB NEAR PIER 1 (EAST FACE)	24" X 6"
2	PLATE CONNECTION PLATE NEAR PIER 1	4" X 3"
3	PLATE BOTTOM OF WEB NEAR PIER 1 (EAST FACE)	30" X 4"
4	PLATE CONNECTION PLATE NEAR PIER 1	5" X 5"
5	EXTEND THE WEEP PIPE BELOW BOTTOM FLANGE	NON APPLICABLE
6	PLATE BOTTOM OF WEB NEAR PIER 1 (WEST FACE)	96" X 6"
7	REPAIR CRACKED HORIZONTAL WELD BETWEEN DIAPHRAGM AND CONNECTION PLATE	NON APPLICABLE
8	PLATE BOTTOM OF WEB NEAR PIER 2 (EAST FACE)	72" X 3"
9	REPAIR CRACKED HORIZONTAL WELD BETWEEN DIAPHRAGM AND CONNECTION PLATE SEE DETAIL A	NON APPLICABLE
10	REPAIR CONNECTION PLATE NEAR PIER 2	2" X 4"
11	PLATE BOTTOM OF WEB NEAR PIER 1 (WEST FACE)	96" X 6"
12	PLATE BOTTOM OF WEB NEAR PIER 2 (EAST FACE)	18" X 1"
13	REPAIR CRACKED HORIZONTAL WELD BETWEEN DIAPHRAGM AND CONNECTION PLATE SEE DETAIL A	NON APPLICABLE
14	PLATE BOTTOM OF WEB NEAR PIER 2 (WEST FACE)	30" X 8"

FOR STRUCTURAL STEEL REPAIR DETAILS SEE DRAWING NOS. S-3 THROUGH S-5 AND
FOR WELD REPAIR DETAIL SEE DRAWING NO. S-57.

REV.	DATE	REVISION DESCRIPTION	SHEET NO.
-	-	-	-
-	-	-	-
-	-	-	-
-	-	-	-
-	-	-	-
-	-	-	-

THE INFORMATION, INCLUDING ESTIMATED QUANTITIES OF WORK, SHOWN ON THESE SHEETS IS BASED ON LIMITED INVESTIGATIONS BY THE STATE AND IS IN NO WAY WARRANTED TO INDICATE THE CONDITIONS OF ACTUAL QUANTITIES OF WORK WHICH WILL BE REQUIRED.

Plotted Date: 1/2/2013

DESIGNER/DRAFTER: TDC
CHECKED BY: JCM
SCALE AS NOTED

STATE OF CONNECTICUT
DEPARTMENT OF TRANSPORTATION

Filename: ...\SB_MSH_BR03520_S56_FRAMING_PLAN_AND_STEEL_REPAIR_DETAILS.dgn

SIGNATURE/BLOCK:
OFFICE OF ENGINEERING
APPROVED BY:

PROJECT TITLE:
BEAM END
AND BEARING REPAIRS
IN DISTRICT 1

TOWN: CROMWELL
DRAWING TITLE: BRIDGE NO. 03520
FRAMING PLAN

PROJECT NO. 171-359
DRAWING NO. S-56
SHEET NO. 03.56

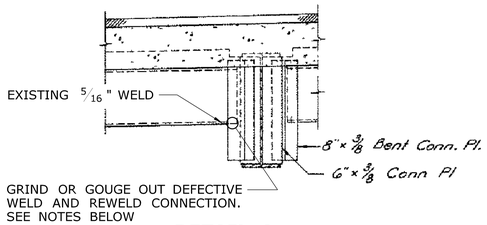

DETAIL A

SCALE: 1/2"=1'-0"

NOTES:
REPAIR THE BOTTOM HORIZONTAL LEG OF THE DIAPHRAGM TO CONNECTION PLATE WELD. REMOVAL AND REWELDING TO BE INCLUDED FOR PAYMENT FOR UNDER THE ITEM "REPAIR DEFECTIVE WELDS". THE PAINT REMOVAL AND REPAINTING OF EXISTING STEEL TO BE PAID FOR UNDER THE ITEM "LOCALIZED PAINT REMOVAL AND FIELD PAINTING OF EXISTING STEEL".

PRIOR TO APPLYING THE HEAT OF WELDING/CUTTING EQUIPTMENT TO LOCALIZED AREAS OF EXISTING STEEL, THE EXISTING PAINT SHALL BE REMOVED ON EACH FACE OF STEEL TO A WIDTH OF 6 INCHES FROM WHEREVER THE HEAT WILL BE APPLIED, OR AS DIRECTED BY THE ENGINEER.

FOR WELDING NOTES SEE "REHABILITATION OF EXISTING STRUCTURAL STEEL NOTES" ON DRAWING NO. S-2.

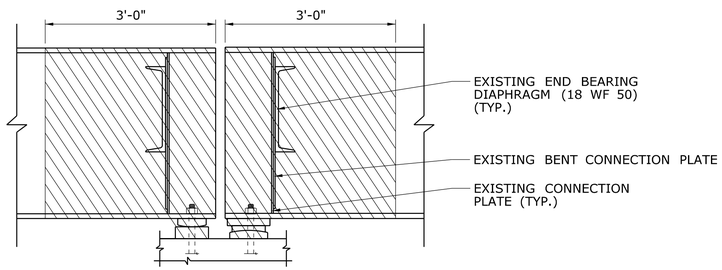

LIMITS OF CLEANING AND PAINTING - BEAM ENDS OVER PIERS

SCALE: 3/4" = 1'-0"

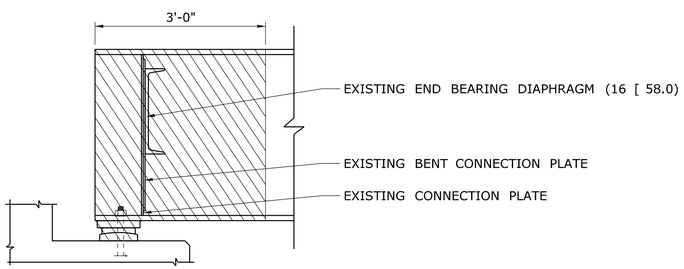

LIMITS OF CLEANING AND PAINTING - BEAM ENDS AT ABUTMENTS

SCALE: 3/4" = 1'-0"

DENOTES LIMITS OF CLEANING AND PAINTING OF BEAM ENDS AND BEARINGS. THIS WORK TO BE INCLUDED FOR PAYMENT UNDER THE ITEM "LOCALIZED PAINT REMOVAL AND FIELD PAINTING OF EXISTING STEEL (SITE NO. 18)".

FOR NOTES SEE "PAINTING NOTES" DRAWING NO. S-2.

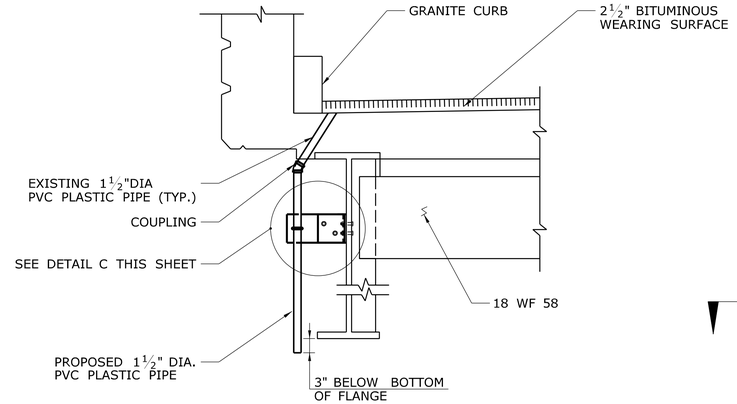

NOTE: EXTENSION OF THE WEEP PIPE WILL BE INCLUDED FOR PAYMENT UNDER THE ITEM "EXTEND EXISTING WEEPHOLES".

DETAIL B

SCALE: 3/4"=1'-0"

FOR NOTES SEE "WEEP PIPE NOTES" DRAWING NO. S-2.

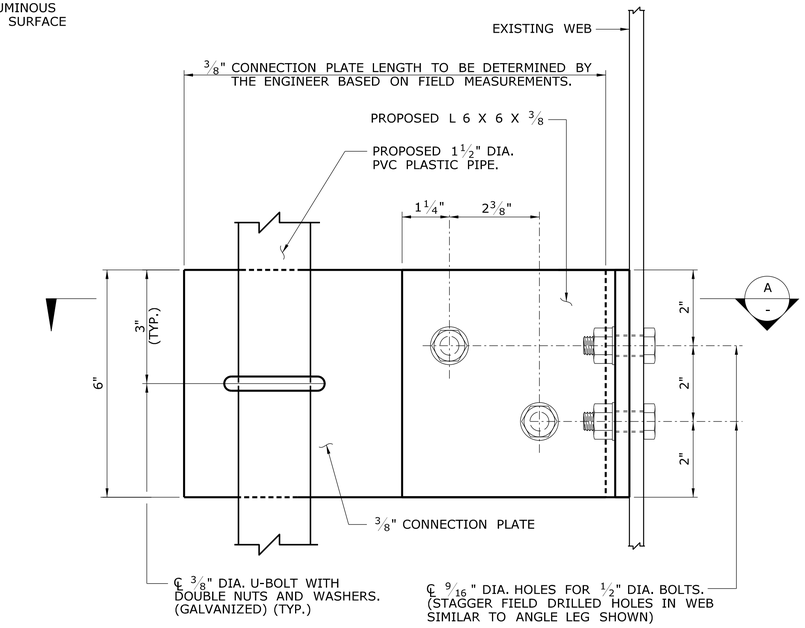

DETAIL C

SCALE: 6"=1'-0"

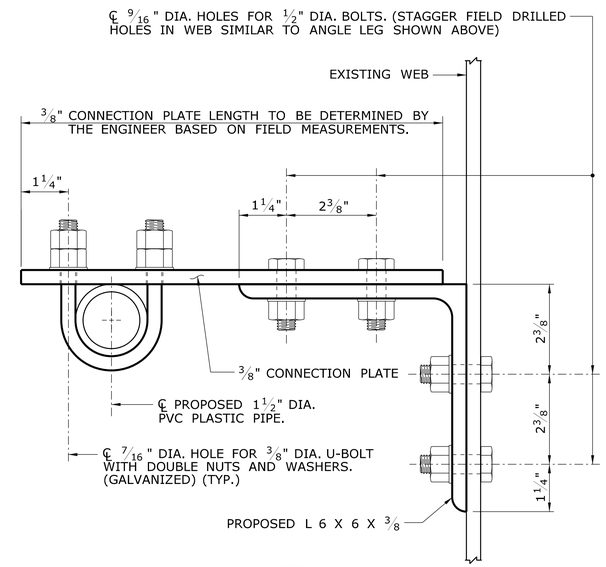

SECTION A-

SCALE: 6"=1'-0"

REV.	DATE	REVISION DESCRIPTION	SHEET NO.
-	-	-	-
-	-	-	-
-	-	-	-
-	-	-	-
-	-	-	-
-	-	-	-

THE INFORMATION, INCLUDING ESTIMATED QUANTITIES OF WORK, SHOWN ON THESE SHEETS IS BASED ON LIMITED INVESTIGATIONS BY THE STATE AND IS IN NO WAY WARRANTED TO INDICATE THE CONDITIONS OF ACTUAL QUANTITIES OF WORK WHICH WILL BE REQUIRED.

Plotted Date: 1/2/2013

DESIGNER/DRAFTER: TDC
CHECKED BY: JCM
SCALE AS NOTED

STATE OF CONNECTICUT
DEPARTMENT OF TRANSPORTATION

Filename: ...\SB_MSH_BR03520_S57_MISCELLANEOUS_REPAIR_DETAILS.dgn

SIGNATURE/BLOCK:
OFFICE OF ENGINEERING
APPROVED BY:

PROJECT TITLE:
BEAM END AND BEARING REPAIRS IN DISTRICT 1

TOWN: CROMWELL
DRAWING TITLE: BRIDGE NO. 03520 STEEL REPAIR DETAILS

PROJECT NO. 171-359
DRAWING NO. S-57
SHEET NO. 03.57

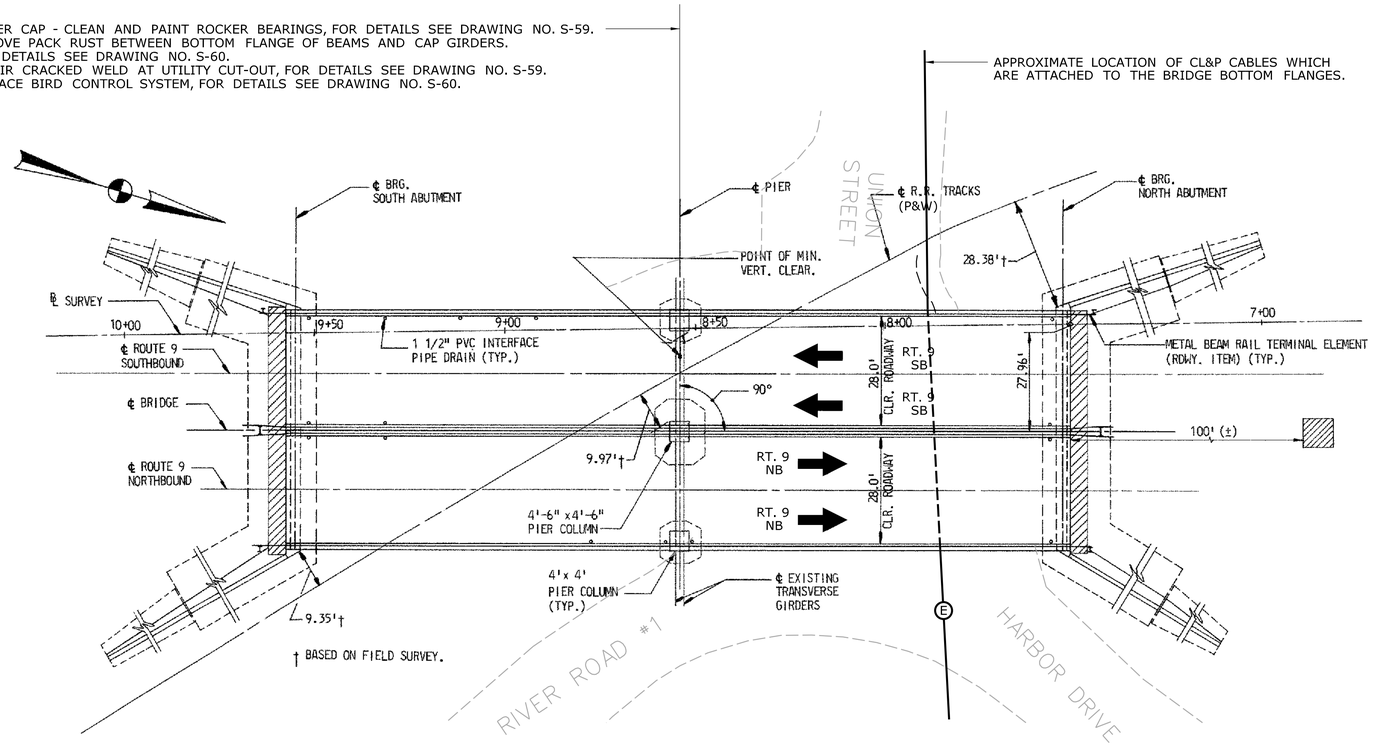

GENERAL PLAN - BRIDGE NO. 00638, RT. 9 OVER P&W RAILROAD

SCALE: 1" = 20'

NOTE:
IN THE EVENT OF A FLOOD WARNING, TEMPORARY WORK PLATFORMS AND OTHER CONSTRUCTION EQUIPMENT THAT EXTENDS BELOW THE FEMA 100-YEAR FLOOD ELEVATION MUST BE REMOVED IN A TIMELY MANNER.

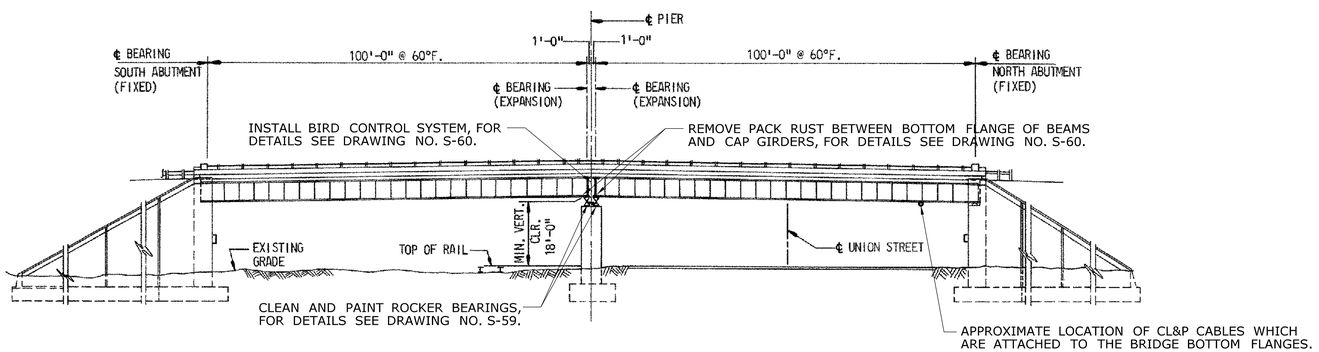

ELEVATION

SCALE: 1" = 20'

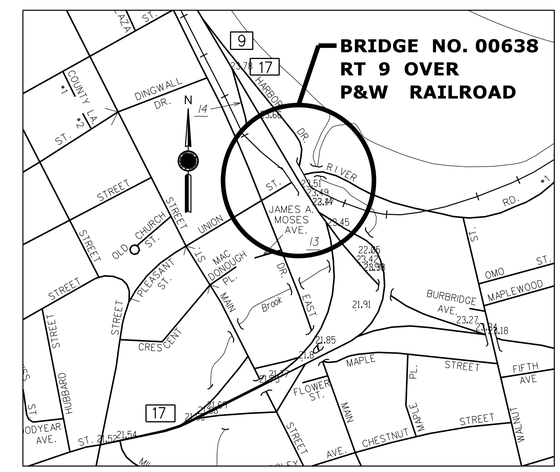

LOCATION PLAN

SCALE
0 1000 FT

REV.	DATE	REVISION DESCRIPTION	SHEET NO.
-	-	-	-
-	-	-	-
-	-	-	-
-	-	-	-
-	-	-	-
-	-	-	-

THE INFORMATION, INCLUDING ESTIMATED QUANTITIES OF WORK, SHOWN ON THESE SHEETS IS BASED ON LIMITED INVESTIGATIONS BY THE STATE AND IS IN NO WAY WARRANTED TO INDICATE THE CONDITIONS OF ACTUAL QUANTITIES OF WORK WHICH WILL BE REQUIRED.

Plotted Date: 1/2/2013

DESIGNER/DRAFTER: TDC
CHECKED BY: JCM
SCALE AS NOTED

STATE OF CONNECTICUT
DEPARTMENT OF TRANSPORTATION

Filename: ...\SB_MSH_BR00638_S58_GENERAL_PLAN.dgn

SIGNATURE/ BLOCK:
OFFICE OF ENGINEERING
APPROVED BY:

PROJECT TITLE:
BEAM END AND BEARING REPAIRS IN DISTRICT 1

TOWN: MIDDLETOWN
DRAWING TITLE: BRIDGE NO. 00638 GENERAL PLAN

PROJECT NO. 171-359
DRAWING NO. S-58
SHEET NO. 03.58

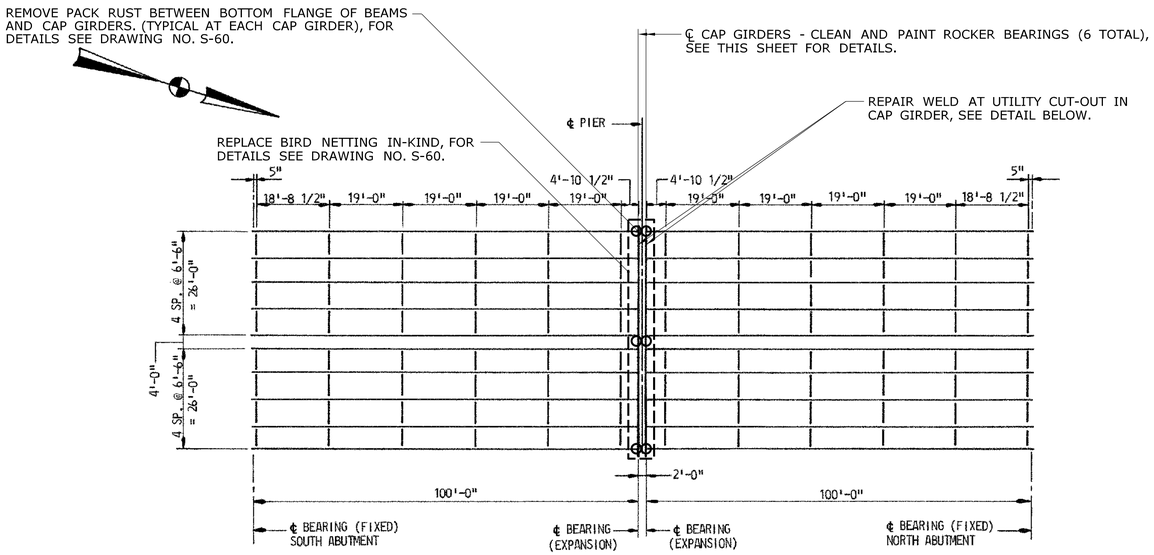

FRAMING PLAN

SCALE: 1" = 40'

EXISTING STRUCTURAL STEEL MATERIAL DESIGNATION: ASTM A 36.

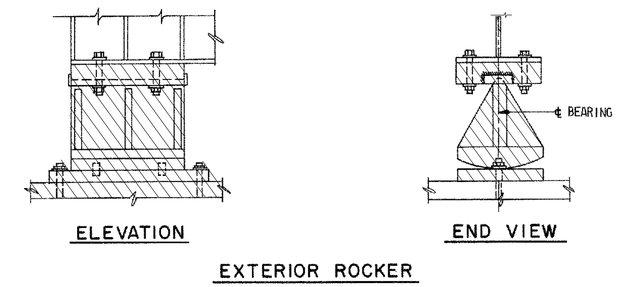

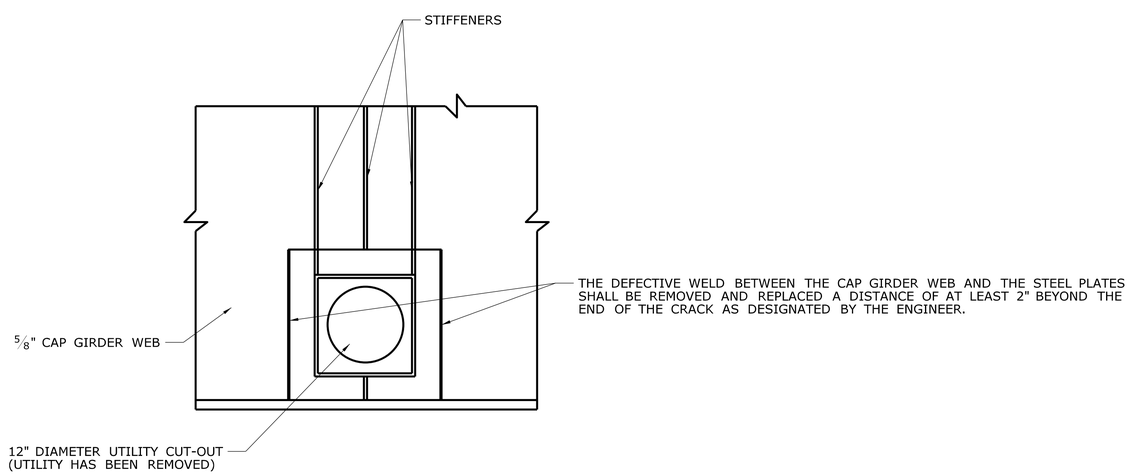

ELEVATION - UTILITY CUT-OUT WELD REPAIR (SOUTH FACE)

SCALE: 1" = 1'-0"

NOTE: SOUTH CAP GIRDER SHOWN, NORTH CAP GIRDER SIMILAR. ALL CONSTRUCTION ACTIVITIES REQUIRED TO REPAIR THE WELDS TO BE INCLUDED FOR PAYMENT UNDER THE ITEM "REPAIR DEFECTIVE WELDS".

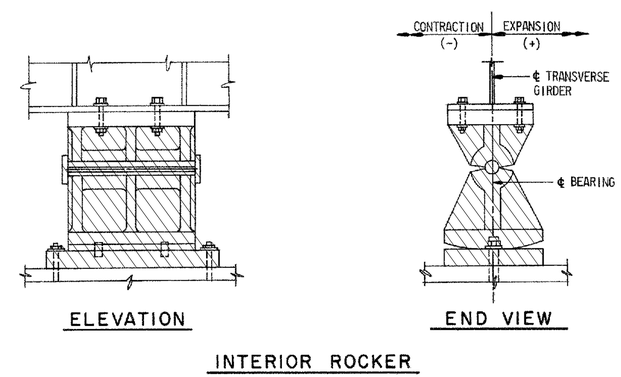

LIMITS OF CLEANING AND PAINTING OF ROCKER BEARINGS

SCALE: 3/4" = 1'-0"

DENOTES LIMITS OF CLEANING AND PAINTING OF BEARINGS. THIS WORK TO BE INCLUDED FOR PAYMENT FOR UNDER THE ITEM "LOCALIZED PAINT REMOVAL AND FIELD PAINTING OF EXISTING STEEL (SITE NO. 19)".

NOTE: THESE DETAILS ARE FOR INFORMATION ONLY.

FOR NOTES SEE "PAINTING NOTES" ON DRAWING NO. S-2.

REV.	DATE	REVISION DESCRIPTION	SHEET NO.
-	-	-	-
-	-	-	-
-	-	-	-
-	-	-	-
-	-	-	-
-	-	-	-

THE INFORMATION, INCLUDING ESTIMATED QUANTITIES OF WORK, SHOWN ON THESE SHEETS IS BASED ON LIMITED INVESTIGATIONS BY THE STATE AND IS IN NO WAY WARRANTED TO INDICATE THE CONDITIONS OF ACTUAL QUANTITIES OF WORK WHICH WILL BE REQUIRED.

Plotted Date: 1/2/2013

DESIGNER/DRAFTER: TDC

CHECKED BY: JCM

SCALE AS NOTED

STATE OF CONNECTICUT
DEPARTMENT OF TRANSPORTATION

Filename: ...\SB_MSH_BR00638_S59_FRAMING_PLAN_AND_CLEAN_AND_PAINT_DETAILS.dgn

SIGNATURE/ BLOCK:

OFFICE OF ENGINEERING

APPROVED BY:

PROJECT TITLE:

BEAM END AND BEARING REPAIRS IN DISTRICT 1

TOWN: MIDDLETOWN

DRAWING TITLE: BRIDGE NO. 00638 FRAMING PLAN AND MISCELLANEOUS REPAIR DETAILS

PROJECT NO. 171-359

DRAWING NO. S-59

SHEET NO. 03.59

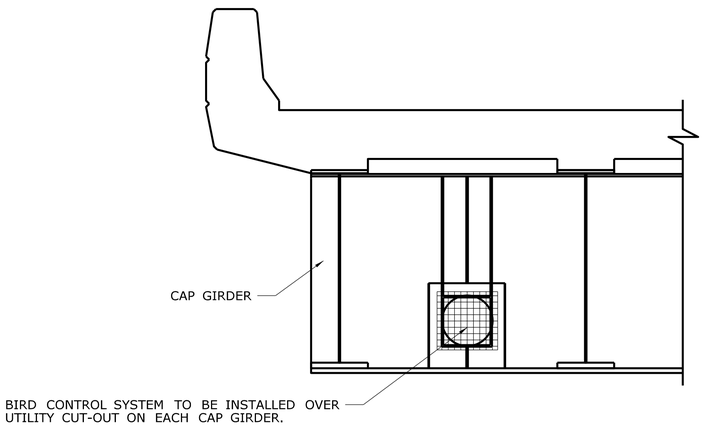

BIRD CONTROL SYSTEM AT UTILITY CUTOUT

SCALE: $\frac{1}{2}$" = 1'-0"

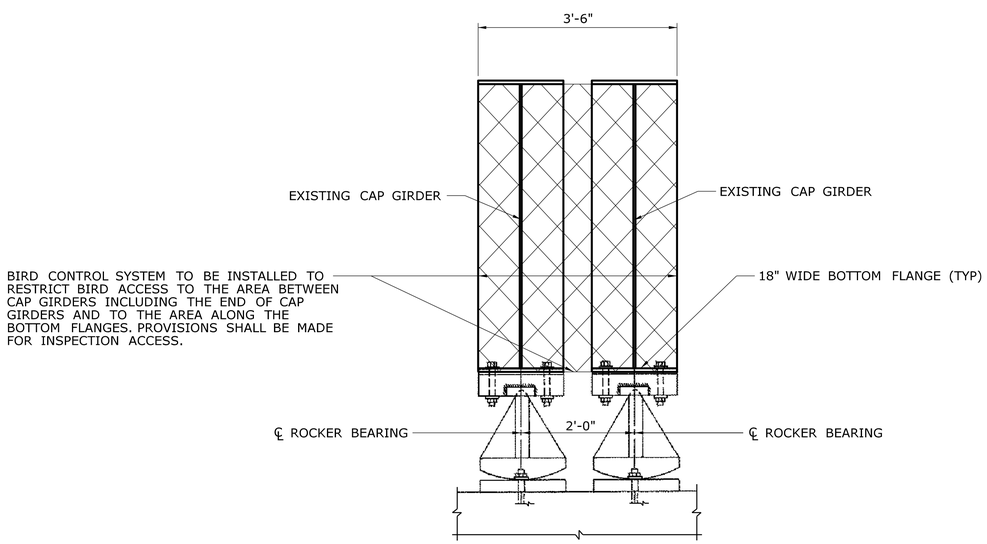

BIRD CONTROL SYSTEM AT END OF CAP GIRDERS

SCALE: $\frac{3}{4}$" = 1'-0"

BIRD CONTROL SYSTEM DETAILS

NOTE: ALL CONSTRUCTION ACTIVITIES NECESSARY TO INSTALL THE BIRD CONTROL SYSTEM TO BE INCLUDED FOR PAYMENT UNDER THE ITEM "FURNISH AND INSTALL BIRD CONTROL SYSTEM".

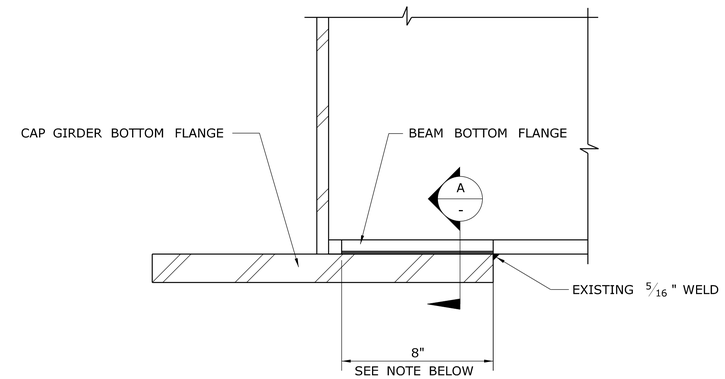

SECTION AT BEAM BOTTOM FLANGE CONNECTION TO CAP GIRDER BOTTOM FLANGE

SCALE: 3" = 1'-0"

NOTE: REMOVE PACK RUST BETWEEN BEAM BOTTOM FLANGE AND CAP GIRDER BOTTOM FLANGE. GRIND OUT A MINIMUM $\frac{1}{4}$ DEEP VOID BETWEEN FLANGES. CLEAN AND PAINT AREA OF PACK RUST REMOVAL. FILL VOID WITH SILICONE SEALENT. THIS WORK TO BE INCLUDED FOR PAYMENT UNDER THE ITEM "LOCALIZED PAINT REMOVAL AND FIELD PAINTING OF EXISTING STEEL." THE SILICONE SEALANT PRODUCT SUBMITTED TO THE ENGINEER FOR APPROVAL SHALL PROVIDE A LONG LASTING WATER TIGHT SEAL BETWEEN STEEL PLATES. (TYPICAL EACH BEAM)

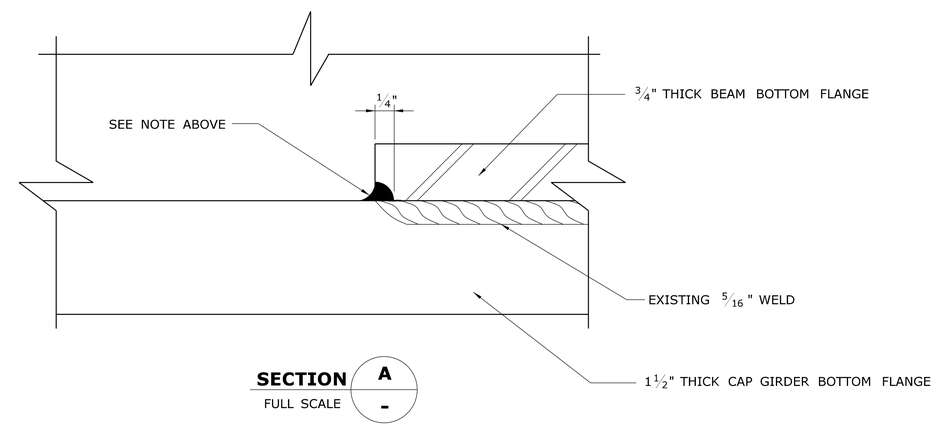

SECTION A / -
FULL SCALE

FOR NOTES SEE "PAINTING NOTES" ON DRAWING NO. S-2.

REV.	DATE	REVISION DESCRIPTION	SHEET NO.
-	-	-	-
-	-	-	-
-	-	-	-
-	-	-	-
-	-	-	-
-	-	-	-

THE INFORMATION, INCLUDING ESTIMATED QUANTITIES OF WORK, SHOWN ON THESE SHEETS IS BASED ON LIMITED INVESTIGATIONS BY THE STATE AND IS IN NO WAY WARRANTED TO INDICATE THE CONDITIONS OF ACTUAL QUANTITIES OF WORK WHICH WILL BE REQUIRED.

Plotted Date: 1/2/2013

DESIGNER/DRAFTER: TDC
CHECKED BY: JCM
SCALE AS NOTED

STATE OF CONNECTICUT
DEPARTMENT OF TRANSPORTATION

Filename: ...\SB_MSH_BR00638_S60_BIRD_CONTROL_SYSTEM_DETAILS.dgn

SIGNATURE/BLOCK:
OFFICE OF ENGINEERING
APPROVED BY:

PROJECT TITLE:
BEAM END AND BEARING REPAIRS IN DISTRICT 1

TOWN: MIDDLETOWN
DRAWING TITLE: BRIDGE NO. 00638 BIRD CONTROL SYSTEM DETAILS

PROJECT NO. 171-359
DRAWING NO. S-60
SHEET NO. 03.60

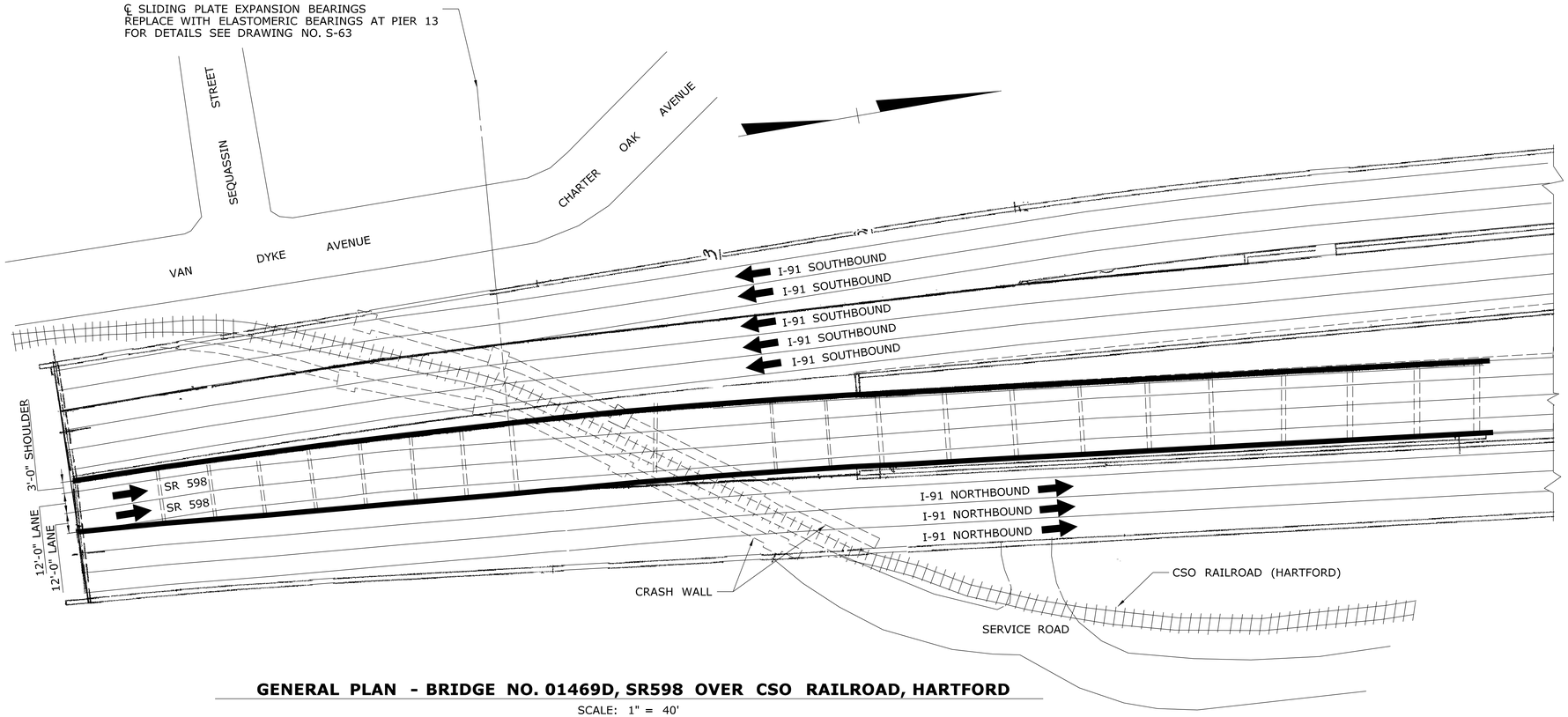

GENERAL PLAN - BRIDGE NO. 01469D, SR598 OVER CSO RAILROAD, HARTFORD

SCALE: 1" = 40'

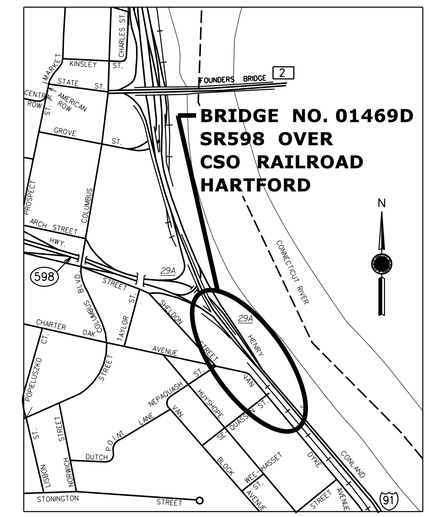

LOCATION PLAN

SCALE
0 1000 FT

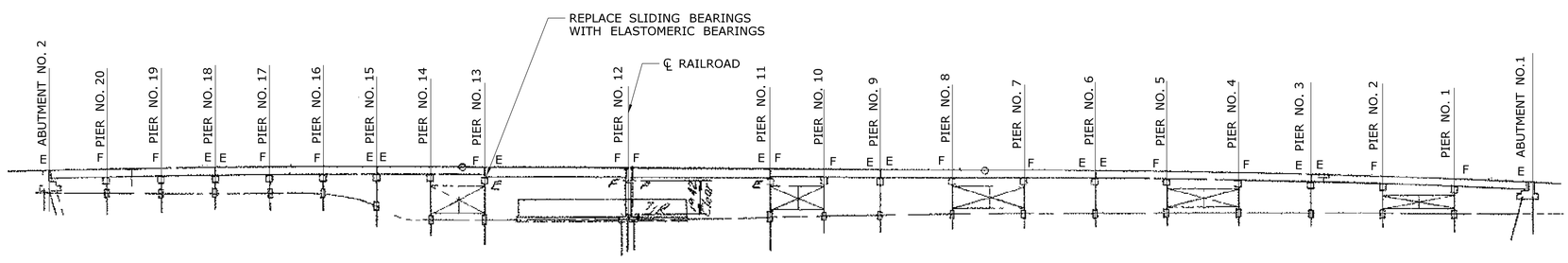

ELEVATION

SCALE: 1" = 40'

NOTE: 1 - REPAIR VARIOUS AREAS OF GIRDER SECTION LOSS FOR LOCATIONS AND DETAILS SEE FRAMING PLAN ON DRAWING NO. S-62.

2 - CLEAN AND PAINT VARIOUS AREAS OF GIRDER EXPANSION BEARINGS FOR LOCATIONS AND DETAILS SEE FRAMING PLAN ON DRAWING NOS. S-62.

REV.	DATE	REVISION DESCRIPTION	SHEET NO.
-	-	-	-
-	-	-	-
-	-	-	-
-	-	-	-
-	-	-	-
-	-	-	-

THE INFORMATION, INCLUDING ESTIMATED QUANTITIES OF WORK, SHOWN ON THESE SHEETS IS BASED ON LIMITED INVESTIGATIONS BY THE STATE AND IS IN NO WAY WARRANTED TO INDICATE THE CONDITIONS OF ACTUAL QUANTITIES OF WORK WHICH WILL BE REQUIRED.

Plotted Date: 1/2/2013

DESIGNER/DRAFTER: BU

CHECKED BY: JCM

SCALE AS NOTED

STATE OF CONNECTICUT
DEPARTMENT OF TRANSPORTATION

Filename: ...\SB_MSH_BR01469D_S61_GENERAL_PLAN.dgn

SIGNATURE/ BLOCK:
OFFICE OF ENGINEERING

APPROVED BY:

PROJECT TITLE:
BEAM END
AND BEARING REPAIRS
IN DISTRICT 1

TOWN: HARTFORD

DRAWING TITLE:
BRIDGE NO. 01469D
GENERAL PLAN

PROJECT NO. 171-359

DRAWING NO. S-61

SHEET NO. 03.61

EXISTING STRUCTURAL STEEL MATERIAL DESIGNATIONS:

ROLLED BEAMS AND STRINGERS: ASTM A 36
ALL OTHER STEEL MEMBERS: ASTM A 373

P — CLEAN AND PAINT EXPANSION BEARINGS. FOR DETAILS SEE DRAWING NO. S-63

◯ — REPAIR SECTION LOSS. FOR DETAILS SEE DRAWING NOS. S-3 THROUGH S-5

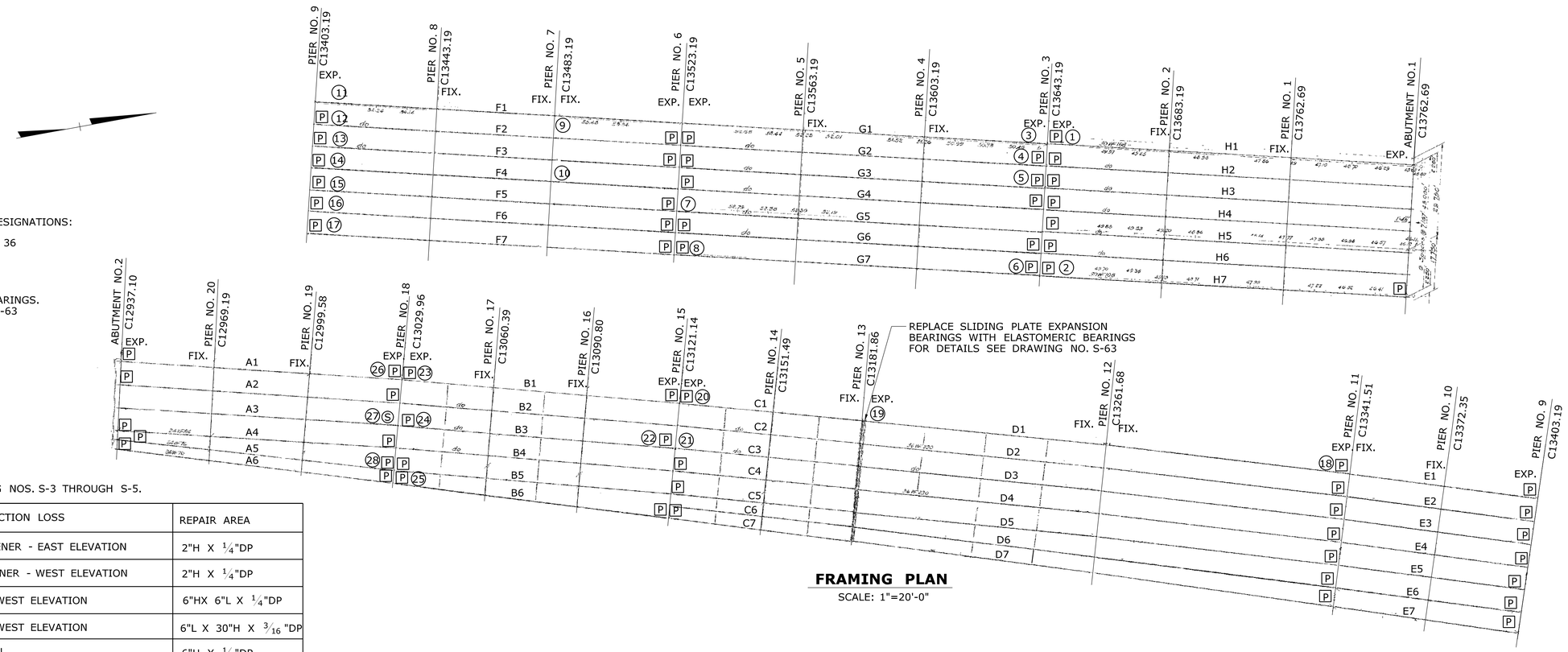

FRAMING PLAN

SCALE: 1"=20'-0"

FOR STRUCTURAL STEEL DETAILS SEE DRAWING NOS. S-3 THROUGH S-5.

LOCATION SYMBOL	DESCRIPTION OF WORK: REPAIR SECTION LOSS	REPAIR AREA
1	PLATE BOTTOM OF BEARING STIFFENER - EAST ELEVATION	2"H X 1/4"DP
2	PLATE BOTTOM OF BEARING STIFFENER - WEST ELEVATION	2"H X 1/4"DP
3	PLATE BOTTOM OF WEB - EAST & WEST ELEVATION	6"HX 6"L X 1/4"DP
4	PLATE BOTTOM OF WEB - EAST & WEST ELEVATION	6"L X 30"H X 3/16 "DP
5	PLATE STIFFENER - WEST ELEVATION	6"H X 1/8"DP
6	PLATE WEB - EAST AND WEST ELEVATION	6"H X 1/8"DP
7	PLATE BOTTOM OF STIFFENER - EAST ELEVATION	6"L X 3"H X 3/16 "DP
8	PLATE BASE OF WEB BEAM - EAST FACE	2"L X 3"H X 3/16 "DP
8	PLATE STIFFENER - WEST ELEVATION	5"L X 2"H X 3/16 "DP
9	PLATE STIFFENER - EAST ELEVATION	5"H X 1/8"DP
10	PLATE STIFFENER - EAST ELEVATION	5"H X 1/8"DP
11	PLATE BOTTOM OF BEARING STIFFENER, EAST & WEST ELEVATION	6"L X 12"H 1/4"DP
12	PLATE BASE OF WEB - WEST ELEVATION	3"L X 1"H X 5/16 "DP
12	PLATE BOTTOM OF BEARING STIFFENER, WEST ELEVATION	3"H X 3/16 "DP
12	PLATE BASE OF WEB - EAST AND WEST ELEVATION	6"L X 6"H X 5/16 "DP
12	PLATE BOTTOM OF BEARING STIFFENER, EAST ELEVATION	3"H X 1/8"DP
13	PLATE BOTTOM OF BEARING STIFFENER, EAST ELEVATION	3"H X 1/8"DP
14	PLATE BASE OF WEB - EAST & WEST ELEVATION	6"L X 3"H X 5/16 "DP
15	PLATE BASE OF WEB - WEST ELEVATION	1"L X 1"H X 1/4"DP
15	PLATE BOTTOM OF BEARING STIFFENER, EAST ELEVATION	1"H X 3/16 "DP
16	PLATE BOTTOM OF BEARING STIFFENER, WEST ELEVATION	1"H X 3/16 "DP
17	PLATE BOTTOM OF BEARING STIFFENER, WEST ELEVATION	6"H X 1/8"DP
17	PLATE BASE OF WEB - EAST ELEVATION	3"L X 1"H X 3/16 "DP
18	PLATE BASE OF WEB - EAST ELEVATION	1 1/2"L X 3"H X 1/4"DP
19	PLATE BASE OF WEB - EAST ELEVATION	3"L X 2"H X 1/4"DP
20	PLATE BOTTOM OF WEB - WEST ELEVATION	2"L X 2"H X 3/16 "DP
20	PLATE BOTTOM OF WEB - EAST ELEVATION	4"L X 4"H X 1/8"DP
21	PLATE STIFFENER - EAST ELEVATION	2"H X 1/8"DP
22	PLATE BOTTOM OF WEB - EAST ELEVATION	4"L X 2"H X 1/8"DP
23	PLATE BOTTOM OF WEB - WEST ELEVATION	9"L X 3"H X 3/16 ""DP
23	PLATE WEB - WEST ELEVATION	18"L X 6"H X 1/8"DP
23	PLATE BOTTOM OF STIFFENER - WEST ELEVATION	3 1/4"L X 2 1/2"H
23	PLATE BOTTOM OF STIFFENER - EAST & WEST ELEVATION	5"L X 3"H 1/4"DP
24	REMOVE AND REPLATE DETERIORATED PORTION OF CONNECTION PLATE	2 1/2"L X 3"H X 1/8"DP
24	PLATE STIFFENER - EAST ELEVATION	1/4" DIA.
25	PLATE STIFFENER - WEST ELEVATION	2"L X 3"H X 1/8"DP
26	PLATE BOTTOM OF WEB - WEST ELEVATION	2"L X 3"H X 1/8"DP
26	PLATE BOTTOM OF WEB - EAST ELEVATION	7"L X 5"H X 1/8"DP
26	PLATE BOTTOM OF STIFFENER - EAST BEAM	4"H X 1/8"DP
27	PLATE STIFFENER - WEST ELEVATION	2"L X 3"H X 1/8"DP
28	PLATE BOTTOM OF WEB - EAST ELEVATION	2"L X 4"H X 1/8"DP

REV.	DATE	REVISION DESCRIPTION	SHEET NO.
-	-	-	-
-	-	-	-
-	-	-	-
-	-	-	-
-	-	-	-
-	-	-	-

THE INFORMATION, INCLUDING ESTIMATED QUANTITIES OF WORK, SHOWN ON THESE SHEETS IS BASED ON LIMITED INVESTIGATIONS BY THE STATE AND IS IN NO WAY WARRANTED TO INDICATE THE CONDITIONS OF ACTUAL QUANTITIES OF WORK WHICH WILL BE REQUIRED.

Plotted Date: 1/2/2013

DESIGNER/DRAFTER: BU
CHECKED BY: JCM
SCALE AS NOTED

STATE OF CONNECTICUT
DEPARTMENT OF TRANSPORTATION

Filename: ...\SB_MSH_BR01469D_S62_FRAMING_PLAN.dgn

SIGNATURE/BLOCK: OFFICE OF ENGINEERING
APPROVED BY:

PROJECT TITLE: BEAM END AND BEARING REPAIRS IN DISTRICT 1

TOWN: HARTFORD
DRAWING TITLE: BRIDGE NO. 01469D FRAMING PLAN

PROJECT NO. 171-359
DRAWING NO. S-62
SHEET NO. 03.62

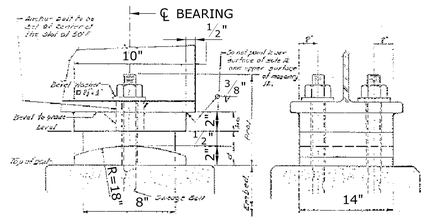

EXISTING SLIDING PLATE EXPANSION BEARINGS

SCALE: 3" = 1'-0"

BEAM REACTIONS (KIPS)			
MARK NO.	D.L.	S.D.L.	LL + I
C132-1 TO C132-7	21	5	64

BEAM REACTION NOTES:

1. THE GIRDER REACTIONS HAVE BEEN PROVIDED FOR INFORMATION ONLY AND MAY BE USED TO DEVELOP DETAILS FOR JACKING THE SUPERSTRUCTURE.
2. THE DEAD LOAD REACTIONS ARE DUE TO THE STRUCTURAL STEEL AND CONCRETE SLAB.
3. THE SUPERIMPOSED DEAD LOAD REACTIONS ARE DUE TO THE PARAPETS AND BITUMINOUS CONCRETE OVERLAY.

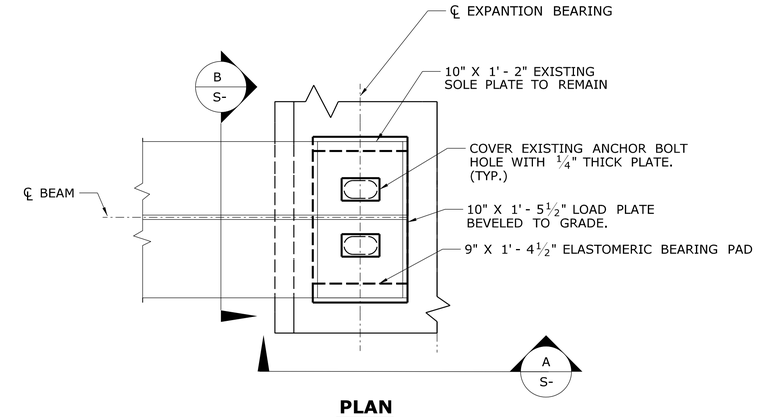

PLAN

SCALE: 1½"=1'-0"

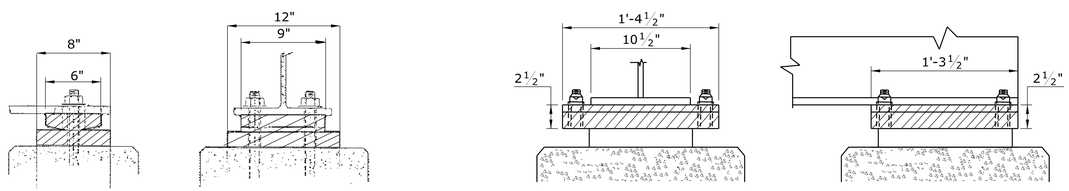

CURVED SOLE PLATE EXPANSION BEARINGS

ELASTOMERIC EXPANSION BEARINGS AT PIER NO. 9 AND 11

EXPANSION BEARINGS

SCALE: 1½" = 1'-0"

DENOTES LIMITS OF CLEANING AND PAINTING OF EXPANSION BEARINGS. THIS WORK TO BE INCLUDED FOR PAYMENT UNDER THE ITEM "LOCALIZED PAINT REMOVAL AND FIELD PAITING OF EXISTING STEEL".

FOR NOTES SEE "PAINTING NOTES" ON DRAWING NO. S-2.

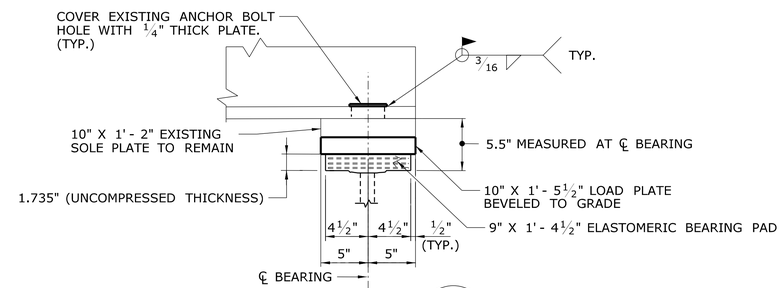

SECTION A

SCALE: 1½"=1'-0"

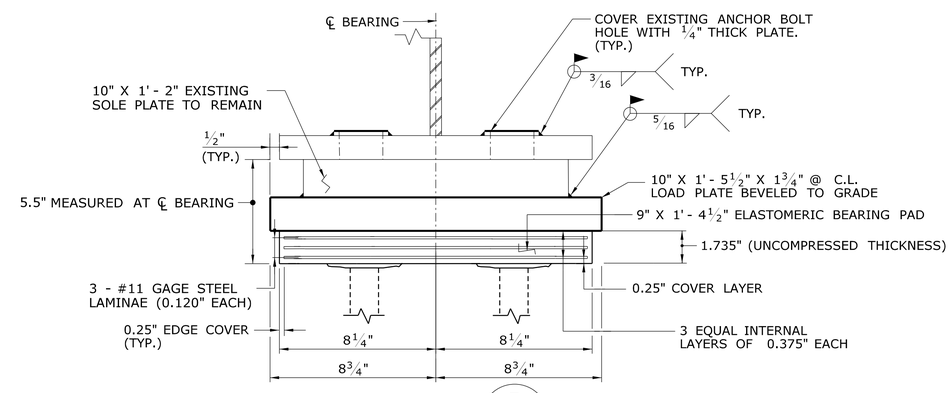

SECTION B

SCALE: 3"=1'-0"

PROPOSED ELASTOMERIC EXPANSION BEARING DETAILS AT PIER NO. 13

NOTES:
WORK INVOLVING JACKING THE EXISTING SUPERSTRUCTURE TO BE PAID FOR UNDER THE ITEM "JACKING FOR BEARING REPLACEMENT".
WORK INVOLVING THE REMOVAL OF THE EXISTING BEARING TO BE PAID FOR UNDER THE ITEM "BEARING REPLACEMENT WITH ELASTOMERIC BEARING PADS".
FOR ADDITIONAL NOTES SEE "EXPANSION BEARING NOTES" ON DRAWING NO. S-2.

REV.	DATE	REVISION DESCRIPTION	SHEET NO.
-	-	-	-
-	-	-	-
-	-	-	-
-	-	-	-
-	-	-	-
-	-	-	-

THE INFORMATION, INCLUDING ESTIMATED QUANTITIES OF WORK, SHOWN ON THESE SHEETS IS BASED ON LIMITED INVESTIGATIONS BY THE STATE AND IS IN NO WAY WARRANTED TO INDICATE THE CONDITIONS OF ACTUAL QUANTITIES OF WORK WHICH WILL BE REQUIRED.

Plotted Date: 1/2/2013

DESIGNER/DRAFTER: BU
CHECKED BY: JCM
SCALE AS NOTED

STATE OF CONNECTICUT
DEPARTMENT OF TRANSPORTATION

Filename: ...\SB_MSH_BR01469D_S63_BEARING_DETAILS.dgn

SIGNATURE/ BLOCK:
OFFICE OF ENGINEERING
APPROVED BY:

PROJECT TITLE:
BEAM END
AND BEARING REPAIRS
IN DISTRICT 1

TOWN: HARTFORD
DRAWING TITLE: BRIDGE NO. 01469D BEARING DETAILS

PROJECT NO. 171-359
DRAWING NO. S-63
SHEET NO. 03.63