S T A T E O F C O N N E C T I C U T
DEPARTMENT OF TRANSPORTATION

2800 BERLIN TURNPIKE, P.O. BOX 317546
NEWINGTON, CONNECTICUT 06131-7546

Phone: 860-594-3129

Subject: Project Nos. 131-194/195: The Rehabilitation of Bridges 01235 & 01236 I84 EB & WB over Marion Avenue in the Town of Southington

March 20, 2013

NOTICE TO CONTRACTORS:

This is to notify all concerned and especially the prospective bidders that the bid opening for the subject project was previously postponed from March 20, 2013 to April 3, 2013 at 2:00 P.M. in the Conference Room of the Department of Transportation Administration Building, 2800 Berlin Turnpike, Newington, Connecticut.

Addendum No. 3 is attached and can also be obtained on the Statewide Contracting Portal at http://www.biznet.ct.gov/scp_search/BidResults.aspx?groupid=64

This addendum is necessary to revise contract documents.

The Department has established a general mailbox to receive contractor questions. Please send all future questions to **DOTContracts@ct.gov**

Philip J. Melchionne
For: Gregory D. Straka
Contracts Manager
Division of Contracts Administration

MARCH 28, 2013
REHABILITATION OF BRIDGES 01235 & 01236 I-84 EB & WB OVER MARION AVE.
STATE PROJECT NOS. 131-194 & 131-195
TOWN OF SOUTHINGTON

ADDENDUM NO. 3

SPECIAL PROVISIONS

NEW SPECIAL PROVISIONS

The following Special Provisions are hereby added to the Contract:

- NOTICE TO CONTRACTOR – COORDINATION WITH FIRE DEPARTMENT
- ITEM NO. 1303251A – FIRE SUPPRESSION STANDPIPE SYSTEM (SITE NO. 1)
- ITEM NO. 1303252A – FIRE SUPPRESSION STANDPIPE SYSTEM (SITE NO. 2)

REVISED SPECIAL PROVISIONS

The following Special Provisions are hereby deleted in their entirety and replaced with the attached like-named Special Provisions:

- ITEM NO. 0514038A – PRESTRESSED BEAMS – PRETENSIONED TYPE BT-1200
- ITEM NO. 0514998A – PRECAST SUPERSTRUCTURE – TYPICAL EXTERIOR SEGMENT
- ITEM NO. 0520036A – ASPHALTIC PLUG EXPANSION JOINT SYSTEM

CONTRACT ITEMS

NEW CONTRACT ITEMS

ITEM NO.	DESCRIPTION	UNIT	QUANTITY
1303251A	FIRE SUPPRESSION STANDPIPE SYSTEM (SITE NO. 1)	L.S.	L.S.
1303252A	FIRE SUPPRESSION STANDPIPE SYSTEM (SITE NO. 2)	L.S.	L.S.

REVISED CONTRACT ITEMS

ITEM NO.	DESCRIPTION	ORIGINAL QUANTITY	REVISED QUANTITY
0216000	PERVIOUS STRUCTURE BACKFILL	14 C.Y.	90 C.Y.
0755010	GEOTEXTILE (SEPARATION - MEDIUM SURVIVABILITY)	4,000 S.Y.	7,200 S.Y.

0601073A	CLASS "S" CONCRETE	15 C.F.	50 C.F.

PLANS

NEW PLAN

The following Plan Sheet is hereby added to the Contract:

04.22.A3

REVISED PLANS

The following Plan Sheets are hereby deleted and replaced with the like-numbered Plan Sheets:

02.01.A3, 04.02.A3, 04.17.A3, 04.20.A3, 05.05.A3 & 05.08.A3

QUESTIONS & ANSWERS

Q1. Drawings S-09 and S-10 show the existing backwalls to be cut and removed. An elevation for the saw cut location is given at each end of each abutment with the saw cut being a straight line between the two elevations. The bottom of the extended deck slab is shown in the "End Diaphragm Section on Drawing S-17 to be a fixed dimension below the finished roadway surface; however, the roadway has a break in grade at the edge of shoulder and is not a straight line grade across the entire width. Is the intent to vary the thickness of the Class "S" Concrete pour on the top of the backwall to make up the difference?

A1. The thickness of the extended slab that extends over the backwall will vary, with a minimum thickness of 9 inches. The bottom (soffit) of the extended slab will follow the slope of the backwall along its length. The top of extended slab will follow the roadway cross slope. The detail on plan sheet 04.17 (Drawing S-17) has been revised and is included as part of this addendum; Class "S" Concrete is no longer specified at that location.

Q2. The Class "S" Concrete pour mentioned above has a note on the plan that it is to be "installed after the new bridge is in place". Once the bridge is in place, the full height end diaphragm blocks all access to the front face of the backwall to install or strip forms. Please advise

A2. The detail on plan sheet 04.17 (Drawing S-17) has been revised and is included as part of this addendum; Class "S" Concrete is no longer specified at that location.

Q3. If the forming issue is resolved; please advise on the following issues - if both faces of this Class S Concrete are formed, there appears to be no access to pour the concrete. Class "S" Concrete is not a high early strength concrete and since it cannot be poured until the new bridge is in place, the concrete will not have developed strength prior to traffic being placed on it.

A3. It is not intended that the backwall provide support for the extended deck slab, and is not required to have developed any particular strength prior to opening the road for traffic. Additionally, the detail on plan sheet 04.17 (Drawing S-17) has been revised and is

included as part of this addendum; Class "S" Concrete is no longer specified at that location.

Q4. The plans call for the furnishing of NEBT 1200 prestressed girders. The beam suppliers are proposing to furnish structurally equivalent PCEF shaped prestressed girders. Is this substitution acceptable?

A4. The design of the superstructures shown in the contract plans was performed with NEBT 1200 (48 inch deep). The Contractor will have to submit structural calculations with a request for change during construction for the Designer's review and approval.

Q5. The Typical Precast Approach Slab Detail on Drawing # S -20 shows a C.I.P. Closure pour (high early strength concrete). I find no spec for this concrete, please provide. What strength is expected before work can continue, i.e. membrane waterproofing installation and the loads applied by the bituminous paving equipment?

A5. The special provision for Precast Superstructure – Typical Exterior Segment has been revised to include closure pour concrete requirements and is included as part of this addendum, including strength requirements.

Q6. In the same detail is the rebar shown No. 5 or 6 bars?

A6. The reinforcing steel in the closure pour shall be #5 bars.

Q7. The precast approach slabs require cast-in-place closure pours using high early strength concrete. We have the following questions:

a) What are the design requirements for this mix?

b) What strength is required before paving over it with blacktop using heavy equipment?

c) The special provisions require "curing" of the closure pour. How soon after initial set will you allow the hot-applied membrane waterproofing to be applied?

d) Since you are allowing cast-in-place concrete for the closure pours, why are you prohibiting the use of cast-in-place concrete for the approach slabs?

A7a. See A5.

A7b. See A5.

A7c. See A5.

A7d. Cast-in-place concrete will be permitted at closure pours only. See the revised Special Provision entitled "<u>ITEM #0514998A – PRECAST SUPERSTRUCTURE – TYPICAL EXTERIOR SEGMENT</u>" included in this Addendum.

Q8. Item 0514038A – Prestressed Beams added a material specification for foam backer rod and non-shrink grout. The contract drawings for these beams do not show any backer rod or non-shrink grout. Where are these materials required?

A8. Backer rods and non-shrink grout are not anticipated on this project. The special provision has been revised accordingly and is included as part of this addendum.

The Detailed Estimate Sheets do not reflect these changes.

The Bid Proposal Form has been revised to reflect these changes.

There will be no change in the number of calendar days due to this Addendum.

The foregoing is hereby made a part of the contract.

NOTICE TO CONTRACTOR – COORDINATION WITH FIRE DEPARTMENT

Prior to performing work under "Item #1303251A – Fire Suppression Standpipe System (Site No. 1)" and "Item #1303252A – Fire Suppression Standpipe System (Site No. 2)", the Contractor shall coordinate with the local fire authority to review the proposed standpipe installations to assure that all attachments/couplings are compatible with their current equipment and that the proposed installation locations are sufficient for access and use by the Fire Department.

ITEM #1303251A – FIRE SUPPRESSION STANDPIPE SYSTEM (SITE NO. 1)

ITEM #1303252A – FIRE SUPPRESSION STANDPIPE SYSTEM (SITE NO. 2)

Description:

This work shall consist of furnishing and installing fire suppression standpipe systems at the locations shown on the plans or as directed by the Engineer. All work shall conform to these specifications and the requirements of the National Fire Protection Association (NFPA) "Standard for the Installation of Stand Pipe and Hose Systems". A system consists of all materials from the inlet of the pipe to the outlet of the pipe including, but not limited to, the pipe, fittings, couplings, end connections, locking caps, expansion devices, support brackets, drilling and grouting of anchors, installation of the fire suppression standpipe system signs, and all the necessary hardware.

Materials:

1. Pipe: Pipe for standpipe systems shall be Schedule 80, hot dip galvanized, welded and seamless pipe conforming to the requirements of ASTM A53 (Grade B). Pipe bends may be used to eliminate elbows. The minimum pipe bend shall be 12 times the diameter of the pipe (inside diameter of bend). Couplings may be used to join straight sections of pipe. Couplings shall conform to the requirements of ASTM A865, and shall be hot dip galvanized.

2. Elbows and Fittings: Elbows and fittings shall be malleable iron conforming to the requirements of ASTM A197 (ANSI B16.3 Class 300) and shall be galvanized according to the requirements of ASTM A153. All connections shall be threaded to match the adjoining pipe. The elbows and fittings shall be rated for 300 psi pressure.

3. Pipe Supports and Shims: Steel for pipe supports and shims shall conform to be requirements of ASTM A709 Grade 345, and shall be galvanized according to the requirements of ASTM A123.

4. Bolts and Anchor Rods: Bolts shall conform to the requirements of ASTM A325, and shall be supplied with matching nuts and washers. Anchor rods shall conform to the requirements of ASTM A449, and shall be supplied with matching nuts and washers. All bolts, anchor rods, nuts, and washers shall be mechanically galvanized in accordance with the requirements of ASTM B695, Class 50.

5. Fire Department sign and its support system shall conform to aluminum thickness of 0.1. Color of the sign shall have red background with white lettering or as directed by the Town of Southington Fire Marshal.

6. Adhesive Bonding Material: The adhesive bonding material shall be a resin compound specially formulated to anchor steel bars in holes drilled into concrete for the purpose of resisting tension pull-out. The Contractor shall select one of the product systems listed in Standard Specification, Subarticle M.03.01-15- Chemical Anchors.

7. A Materials Certificate shall be submitted in accordance with Article 1.06.07, confirming the conformance of the adhesive bonding material to the requirements set forth in the manufacturer's specification.

8. End Connections: End connections of standpipe systems shall be 5-inch diameter Storz couplings, Style S-37 (female) supplied by:

   Red Head Brass, Inc.
   643 Legion Drive - Box 566
   Shreve, Ohio 44676
   (216) 567-2903
   Or approved equal

   End connections shall be capped with 5-inch diameter locking Storz end caps style SC-L with 18-inch stainless steel cable.

   Couplings at both ends of the standpipe shall be secured to the steel pipe by means of set screws through the collar of the Storz Coupling. Strainers shall also be placed between the Storz coupling and the standpipe to prevent debris from entering the standpipe.

   All hardware shall be constructed of 6061-T6 aluminum with a chrome plated Lustra-Lite finish.

9. Piping: Installation of piping shall conform to standard plumbing practice to ensure no leakage under operating pressures.

10. Testing: After the system has been installed, the Contractor shall test the system in the following manner:

    a. The system shall be pressurized with water to 200 psi for two hours. The system will be inspected for leaks at the joints and connections. If any leaks are detected, the Contractor shall repair the leaks and retest the system.

    b. The Contractor shall perform a low pressure flow test to insure that there are no clogs in the system. If any clogs are detected, the Contractor shall repair the clog, and retest the system.

The Contractor shall coordinate with the Town of Southington Fire Department so that the necessary personnel are present to witness the testing. The contact for the Town of Southington Fire Department is as follows:

T. Russell Wisner
Assistant Fire Chief/Fire Marshal
(860) 621-3202

Construction Methods:

1. Shop Drawings: The Contractor shall furnish shop drawings including all field verified measurements at each standpipe system location in accordance with Article 1.05.02.

2. Adhesive Anchors: Installation of adhesive anchors shall be according to the recommendations of the manufacturer. The Contractor shall take care not to drill through or damage existing reinforcing steel.

3. Fire Suppression Standpipe System Sign should be sized according to the following dimensions and have the following lettering, unless otherwise directed by the Engineer:

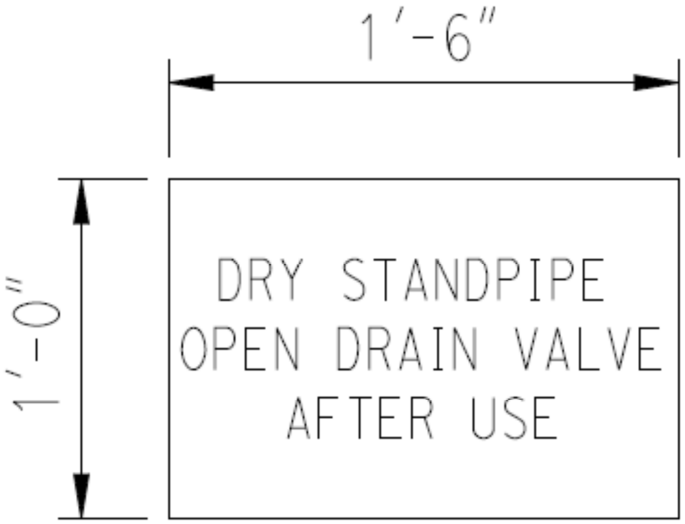

<u>Method of Measurement</u>:

This work, being paid for on a lump sum basis, will not be measured for payment. A complete fire suppression standpipe system consists of all materials from the inlet of the pipe to the outlet of the pipe including, but not limited to, the pipe, fittings, couplings, end connections, locking caps, expansion devices, support brackets, drilling and grouting of anchors, installation of the fire suppression standpipe system signs, and all the necessary hardware.

ITEM #1303251A
ITEM #1303252A

Basis of Payment:

This work will be paid for at the contract lump sum price for "Fire Suppression Standpipe System (Site No. X)", complete in place, which price shall include all materials, equipment, tools, and labor incidental thereto.

Pay Item	Pay Unit
Fire Suppression Standpipe System (Site No. 1)	LS
Fire Suppression Standpipe System (Site No. 2)	LS

ITEM #0514038A – PRESTRESSED BEAMS – PRETENSIONED TYPE BT - 1200

Work under this item shall conform to the requirements of Section 5.14 amended as follows:

Article 5.14.03 - Construction Methods:

Add the following to Subarticle 5.14.03-16:

Erection Plans:

Erection plans shall be prepared and submitted for approval – 9 copies to the Engineer. Erection may proceed only when approval from the Department has been obtained.

ITEM #0514998A – PRECAST SUPERSTRUCTURE – TYPICAL EXTERIOR SEGMENT

Description: This work shall consist of furnishing and installing precast concrete approach slab elements. This work includes all necessary materials and equipment to complete the work as shown on the plans, including all high early strength concrete closure pours and controlled density fill as shown on the plans. The use of cast-in-place concrete will not be considered for substitution for the precast approach slab.

Materials: Materials shall conform to the following requirements:

Concrete: The concrete shall conform to the requirements of Subarticle M.14.01-1, as applicable.

High Early Strength Concrete: The Contractor shall design and submit to the Engineer for approval a high early strength concrete mix. This mix shall be air-entrained, and shall be composed of Portland cement, fine and coarse aggregates, approved admixtures and additives, and water. The mix shall contain between 4 and 7 percent entrained air, and shall attain a 6-hour compressive strength of 2,500 psi. Additionally, the mix shall contain shrinkage compensating additives. This shrinkage compensating additive shall be utilized so as to produce expansion in the high early strength concrete of no more than 3 percent.

In lieu of the above high early strength concrete mix, the Contractor may propose the use of a proprietary type mix that will meet the same physical requirements as those stated above. A mix design shall be submitted for this material, stating the percentage of each component to be utilized.

Regardless of the type of high early strength concrete proposed by the Contractor, substantive data that demonstrates the ability of the material to meet the specification requirements shall be submitted with the proposed mix design at least two weeks prior to its use.

Controlled Density Fill: Controlled density fill shall be a self-compacting, flowable mixture of aggregate and cementitious material containing sufficient Portland cement to develop a 6 hour compressive strength of 100 psi. The contractor shall be responsible for producing a flowable mixture using these guidelines and adjusting the mixture design as called for by the circumstances or as directed by the Engineer. A mix design shall be submitted for this material, stating the percentage of each component to be utilized. The maximum aggregate size shall be 3/8". The amount passing a No. 200 sieve shall not exceed 12 percent. No plastic fines shall be present. The total calculated air content shall not exceed 30 percent. Substantive data that demonstrates the ability of the material to meet the specification requirements for controlled density fill shall be submitted with the proposed mix design at least two weeks prior to its use.

Grout: The grout shall be cement-based, non-shrink, non-metallic, non-staining, shipped in prepackaged units manufactured by commercial formulators and shall require only the addition of water. The grout mix shall conform to Subarticle M.03.01-12(b). Water shall conform to Subarticle M.03.01-4. Chlorides and nitrates shall not be used. The water shall be potable. The Contractor shall provide a Certified Test Report for the prepackaged grout in conformance with the requirements of Article 1.06.07.

Reinforcement: Welded wire fabric shall conform to the requirements of ASTM A185 or ASTM497. Deformed steel bars shall conform to the requirements of ASTM A615, Grade 60.

Threaded Inserts, Lifting Fixtures and Miscellaneous Hardware: All inserts, fixtures and hardware cast into precast concrete components shall have a corrosion-resistant coating or be fabricated from a non-corrosive material suitable for the intended use. The coating shall be either an epoxy material or galvanizing, applied mechanically or by the hot-dip process. All hardware shall be as specified on the working drawings.

Construction Methods:

Submittals

1. Shop Drawings: Before fabrication, the Contractor shall submit shop drawings to the Engineer for approval in accordance with Subarticle 1.05.02-3. These drawings shall include complete details of the methods, materials and equipment he proposes to use. The shop drawings shall include, but not necessarily be limited to, the following:

a. Show all lifting inserts, hardware, or devices and locations on the shop drawings for Engineer's approval.

b. Show locations and details of the lifting devices, including supporting calculations, type, and amount of any additional reinforcing required for lifting.

c. Show minimum compressive strength attained prior to handling the precast elements.

d. Show details of vertical adjusting hardware, if any.

2. Working Drawings: Prior to assembly, prepare Working Drawings for the assembly of the precast approach slabs under the seal of a Professional Engineer licensed in the State of Connecticut in accordance with Article 1.05.02-2. The assembly plan shall include, but not necessarily be limited to, the following:

a. A work area plan, depicting utilities overhead and below the work area, drainage inlet structures, protective measures, etc.

b. Details of all equipment that will be employed for the assembly of the approach slab.

c. Details of all equipment to be used to lift precast elements including cranes, excavators, lifting slings, sling hooks, jacks, etc. Include crane locations, operation radii, lifting calculations, etc.

d. Detailed sequence of construction and a CPM schedule for all operations. Account for setting and cure time for concrete closure pours.

e. Methods of providing temporary support of the precast elements. Include methods of adjusting and securing the element after placement.

f. Procedures for controlling tolerance limits both horizontal and vertical.

g. Methods of forming closure pours.

h. Methods for curing closure pour concrete.

i. Method for diamond grinding to achieve roadway profile and longitudinal grooving.

After the working drawings have been reviewed and the Engineer's comments have been appropriately taken into account and implemented, the Contractor shall submit a final submission of working drawings. The final submission shall include one set of full size (approximately 24" x 36") mylar sheets and three sets of half-scale paper copies.

Fabrication

1. Length of Sections: The width of each precast approach slab shall be determined by the Contractor. When laid together, the approach slab sections shall satisfy the required approach slab width shown on the plans.

2. Forms and Forming Material: Forms shall be mortar tight and strong enough to prevent misalignment of adjacent approach slab sections. They shall be constructed to allow their removal without damage to the concrete. A positive means of supporting reinforcing cages in place during forming shall be required.

The forms shall not be removed until the concrete is strong enough to avoid possible injury from such removal. Forms shall not be removed without approval being granted by the Engineer.

All forming materials used for casting cylindrical openings for lifting holes or holes for grouting deformed steel bars shall be removed.

3. Mixture: The Contractor shall design and submit to the Engineer for review a concrete mix that shall attain a minimum 28 day strength (f'c) as shown on the plans. The mix shall be proportioned and mixed in a batch mixer to produce homogeneous concrete.

4. Placing Concrete: Concrete shall not be deposited in the forms until the Engineer has inspected the placing of the reinforcing steel, and other cast-in-place components, and has given his approval thereof.

Concrete shall not be deposited into the forms when the ambient temperature is below 40°F or above 100 °F, unless adequate heating or cooling procedures have been previously approved by the Engineer. The concrete temperature shall be 60 °F to 90 °F at the time of placement. At no time will truck-mixed or transit-mixed concrete be allowed.

Production during the winter season, from November 15 to March 15 inclusive, will be permitted only on beds located in a completely enclosed structure of suitable size and dimension that provides a controlled atmosphere for the protection of the casting operation and the product.

Outside concreting operations will not be permitted during rainfall unless the operation is completely under cover.

Void forms shall be held in place against uplift or lateral displacement during the pouring and vibrating of the concrete by substantial wire ties or other satisfactory means as approved by the Engineer.

The concrete shall be vibrated internally, or externally, or both, as ordered by the Engineer. The vibrating shall be done with care in such a manner as to avoid displacement of reinforcing steel, voids, forms, or other components. There shall be no interruption in the pouring of any of the sections. Concrete shall be carefully placed in the forms and vibrated sufficiently to produce a surface free from imperfections such as honeycombing, segregation, cracking, or checking. Any deficiencies noted in the sections may be cause for rejection.

5. Test Cylinders: During the casting of the sections, the Contractor shall make test cylinders under the supervision of a representative of the State. A minimum of 4 cylinders shall be taken during each production run or as ordered by the Engineer. The dimensions and type of cylinder mold shall be as specified by the Engineer. Cylinders shall be cured under the requirements of ASTM C31 and shall be used to determine the 28 day compressive strength requirements (f'c). Failure of any of the 28 day tests cylinders to meet 90 % of the minimum compressive strength requirement may be cause for rejection. The Engineer also reserves the right to request and test core specimens from the sections to determine their adequacy.

6. Repairs: The Engineer shall evaluate the acceptability and the cause of the defects and the service condition of the approach slab section. No repairs shall be done by the Contractor unless permission has been granted by the Engineer. The Contractor shall submit to the Engineer for review, the proposed methods and materials to be used in the repair operation. All repairs shall

be sound and properly finished and cured before the approach slab section is delivered to the job site. The Contractor shall bear the costs of all repair work.

7. Finishing: Formed surfaces shall not be finished in any specific manner except as noted below. All fins, runs, or mortar shall be removed from surfaces which will remain exposed. Form marks on exposed surfaces shall be smoothed by grinding.

The following surfaces shall be finished as follows:

> Top surfaces: Where approach slabs are to be covered with membrane waterproofing, the top surface of the slab shall be given a float finish in accordance with Sub-article 6.01.03-21.

Installation

1. Handling and Storage: Care shall be taken during storage, transporting, hoisting and handling of all approach slab sections to prevent damage. Sections damaged by improper storing, transporting or handling shall be repaired or replaced by the Contractor, as directed by the Engineer and at no cost to the State. All storage and handling operations shall be as directed by the Engineer.

The approach slab sections shall not be removed from their casting beds until the concrete has attained a minimum compressive strength of 75 % of the 28 day strength. approach slab sections shall not be shipped to the job site until the 28 day strength (f'c) has been attained.

2. Installation: The installation of the precast approach slabs shall conform to the following:

The installation of the precast approach slabs shall proceed as required by the stage construction plans and in accordance with the special provisions "Prosecution and Progress" and "Maintenance and Protection of Traffic." The approach slab sections shall be placed in a manner to best accommodate and facilitate the construction of the superstructure, wingwalls, etc. The approach slab sections shall be set to the grade indicated on the plans or as directed by the Engineer.

a. Check the condition of the receiving bonding surface prior to connecting elements and take any necessary measures to remove dust, rust, debris, etc. to provide the satisfactory bonding required between the protruding reinforcing bars element and the grouted couplers.

b. Lift approach slab segments using lifting devices as shown on the shop drawings.

c. Set approach slabs in the proper horizontal location. Check for proper alignment and grade within specified tolerances.

d. Adjust approach slabs prior to full release from the crane to facilitate the vertical adjustment process. This will reduce the amount of torque required to turn the bolts in the leveling devices. Check for proper grade within specified tolerances.

e. Survey the top elevation of the approach slab.

f. Adjust vertical leveling devices prior to full release of the approach slab from the crane. This will reduce the amount of torque required to turn the bolts in the leveling devices. Check for proper grade within specified tolerances.

g. Pour or pump grout controlled density fill under the end of the approach slab if shown on the plans. Start from the center of the approach slab and proceed toward the outside edges.

h. Cast closure pours as shown on the plans.

i. Cure closure and pour concrete.

j. All fixtures or holes cast into the sections for lifting or seating shall be neatly filled with non-shrink grout. The finished surface shall be flush and smooth with the adjacent concrete.

No traffic will be permitted on the approach slabs until the closure pour concrete has achieved the required strength of 2,500 psi as determined by compressive strength testing. Membrane waterproofing installation and loads from construction equipment will be permitted with the concrete has achieved a compressive strength of 1,900 psi. The contractor shall form, cure and test all concrete test cylinders under the supervision of a representative of the Department. The type of cylinder mold, and number of cylinders, and method of curing shall be as directed by the Engineer. The Contractor shall provide a portable compressive testing machine, on site, for the purpose of testing compressive strength cylinders for high early strength concrete. All testing shall be done in accordance with the requirements of ASTM C39. The testing machine must be properly calibrated in accordance with ASTM C39, Section 5.

Compressive testing of the controlled density fill is not required.

Method of Measurement: This work will be measured for payment by the number of Precast Superstructure – Typical Exterior Segments installed, complete and accepted in place.

Basis of Payment: This work will be paid for at the contract unit price per each for "Precast Superstructure – Typical Exterior Segment", as shown on the plans and specified, and complete and accepted in place which price shall include all high early strength concrete closure pours, controlled density fill, and all materials, labor, tools and work incidental thereto.

Pay Item	Pay Unit
Precast Superstructure – Typical Exterior Segment	EA.

ITEM #0520036A - ASPHALTIC PLUG EXPANSION JOINT SYSTEM

Description: Work under this item shall consist of furnishing and installing an asphaltic plug expansion joint system (APJ) in conformance with ASTM D6297, as shown on the plans, directed by the Engineer and as specified herein.

Work under this item shall also consist of removal and disposal of bituminous concrete, membrane waterproofing, and existing joint components and sealing elements, excluding the removal of Portland cement concrete headers.

Work under this item shall also consist of cleaning and sealing median barrier joints, parapet joints, and sidewalk joints in accordance with the plans and this specification.

Materials: The following APJ's are qualified for use under this item:

Product	Supplier
Expandex	BASF/Watson Bowman Acme Inc. 95 Pineview Drive Amherst, NY 14228
Thorma-Joint	Dynamic Surface Application, Ltd. 373 Village Road Pennsdale, PA 17756

The APJ component materials including asphaltic binder, aggregate, bridging plates, and the backer rods shall comply with ASTM D6297.

The material composition of the binder and aggregate and their relative mix proportions shall be as specified in Table 1 of ASTM D6297. The aggregate shall meet the requirements of Article M.04.01-1 for wear and soundness and shall meet a gradation as specified by the Supplier.

All backer rods shall satisfy the requirements of ASTM D5249, Type 1.

The bridging plates shall be steel conforming to the requirements of ASTM A36 and be a minimum ¼" thick and 8" wide. For joint openings in excess of 3" the minimum plate dimensions shall be ⅜" thick by 12" wide. Individual sections of plate shall not exceed 4' in length. Steel locating pins for securing the plates shall be size 16d minimum, hot-dip galvanized, and spaced no more than 12" apart.

Other materials which shall be used in conjunction with the qualified APJ's are as follows:

Parapet Sealant:

The sealant used in parapet joint openings shall be a single component non-sag silicone sealant that conforms to the requirements of ASTM D5893.

Sidewalk Sealant:

The sealant used in sidewalk joint openings shall be a rapid cure, self-leveling, cold applied, two-component silicone sealant. The silicone sealant shall conform to the following requirements:

Properties - As Supplied	**Test Method**	**Requirement**
Extrusion Rate	ASTM C1183	200-600 grams/min
Leveling	ASTM C639	Self-Leveling
Specific Gravity	ASTM D792	1.20 to 1.40

Properties - Mixed	**Test Method**	**Requirement**
Tack Free Time	ASTM C679	60 min. max.
Joint Elongation – Adhesion to concrete	ASTM D5329 [1,2,3]	600% min
Joint Modulus @ 100% elongation	ASTM D5329 [1,2,3]	15 psi max
Cure Evaluation	ASTM D5893	Pass @ 5 hours

1. Specimens cured at 77 ± 3^0F. and 50 ± 5% relative humidity for 7 days
2. Specimens size: ½"wide by ½"thick by 2" long
3. Tensile Adhesion test only

The date of manufacture shall be provided with each lot. No sealant shall be used beyond its maximum shelf-life date.

The following two–part silicone sealants are known to have met the specified requirements:

Product	**Supplier**
Dow Corning 902RCS	Dow Corning Corporation 2200 W Salzburg Road Auburn, Michigan 48611
Wabo SiliconeSeal	BASF/Watson Bowman Acme Corporation 95 Pineview Drive Amherst, New York 14228

Other two-component silicone joint sealants expressly manufactured for use with concrete that conform to the aforementioned ASTM requirements will be considered for use provided they are submitted in advance for approval to the Engineer. Other joint sealants will be considered for use only if a complete product description is submitted, as well as documentation describing at least five installations of the product. These documented installations must demonstrate that the product has performed successfully for at least three years on similar bridge expansion joint applications.

A Materials Certificate and Certified Test Report for the asphaltic binder shall be submitted by the Contractor in accordance with the requirements of Article 1.06.07 certifying that the asphaltic binder satisfies the requirements of the most current version of ASTM D6297.

A Materials Certificate for all other components of the APJ, backer rod and sealant used in sealing parapet and sidewalk joint openings, shall be submitted by the Contractor in accordance with the requirements of Article 1.06.07

Construction Methods: The APJ shall be installed at the locations shown on the plans and in stages in accordance with the traffic requirements in the special provisions "Maintenance and Protection of Traffic" and "Prosecution and Progress".

At least 30 days prior to start of installation of the APJ, the Contractor shall submit to the Engineer for approval a detailed Work Quality Control Plan for the installation of the APJ. The submittal shall include all aspects of the installation of the expansion joint system including name of the qualified product selected by the Contractor, a detailed step by step installation procedure and a list of the specific equipment to be used for the installation. The detailed Work Quality Control Plan must fully comply with the supplier's written recommendations and address all anticipated field conditions.

An experienced technical representative employed by the APJ supplier, acceptable to the Engineer, shall be present during the first installation of the APJ to provide the Contractor aid and independent instruction as required to obtain an installation in accordance with ASTM D6297 and satisfactory to the Engineer. Should the Engineer determine that additional technical aid is required after the first installation of the APJ, the technical representative shall be present at additional installations as ordered by the Engineer at no additional cost to the State.

The APJ shall not be installed when bituminous concrete overlay is wet. The APJ shall only be installed when the bridge superstructure surface temperature is within the allowable limits specified in the table below and when the ambient air temperature is within the range of 40^0F and rising to 95^0F with no rain in the work-shift forecast. The allowable bridge superstructure surface temperature range is determined using the thermal movement range provided on the contract plans for the proposed APJ deck installation location and the selected APJ product.

ALLOWABLE BRIDGE SUPERSTRUCTURE SURFACE TEMPERATURE RANGE DURING ASPHALTIC PLUG EXPANSION JOINT INSTALLATION[1]		
Deck Joint Thermal Movement Range Indicated on the Plans[2]	**Expansion Joint Product**	
	Expandex	**Thorma Joint**
0" to ¾"	40° F to 95° F	40° F to 95° F
7/8"	40° F to 93° F	40°F to 95° F
1"	40° F to 80° F	40° F to 95° F
1-1/8"	40° F to 70° F	40° F to 95° F
1-1/4"	40° F to 62° F	40° F to 86° F
1-3/8"	45° F to 55° F	40° F to 77° F
1-1/2"	50° F limit	40° F to 70° F

1. The superstructure surface temperature shall be determined from the average of three or more surface temperature readings taken at different locations on the interior girder surfaces by the Contractor as directed by the Engineer. Temperature measurements of the superstructure shall be taken by the contractor with a calibrated hand held digital infrared laser-sighted thermometer on the surfaces of an interior steel girder, or interior concrete girder protected from direct sunlight. The infrared thermometer to be supplied by the Contractor for this purpose shall meet certification requirements of EN61326-1, EN61010-1, and EN60825-1 maintained by the European Committee for Electrotechnical Standardization (CENELEC). The thermometer shall have a minimum distance-to-spot ratio of 50:1 and shall have adjustable emissivity control. The thermometer shall have a minimum accuracy value of ±1% of reading or ±2°F, whichever is greater. The thermometer shall be used in strict accordance with the manufacturer's written directions. An additional infrared thermometer satisfying the same standards to be used in this application shall also be provided to the Engineer for quality assurance purposes.

2. Linear interpolation may be used to determine an allowable surface temperature range for thermal movement ranges in between values shown in the table, as approved by the Engineer.

Prior to installing the APJ, the Contractor shall determine the exact location of the deck joint beneath the bituminous concrete overly.

The APJ shall be installed symmetrically about the deck joint opening to the dimensions shown on the plans and as directed by the Engineer. The proposed saw cut lines shall be marked on the bituminous concrete overlay by the Contractor and approved by the Engineer, prior to sawcutting. The maximum width of the APJ, measured perpendicular to the deck joint, shall not exceed 24" unless approved by both the Engineer and supplier. The sawcuts delineating the edges of the APJ shall extend full depth of the bituminous concrete overlay.

The existing bituminous concrete overlay, waterproofing membrane and/or existing expansion joint material, within the saw cut limits shall be removed and disposed of by the Contractor to create the joint cutout.

Concrete surfaces, that will support the bridging plates, shall be smooth and form a plane along and across the deck joint. Rough and damaged concrete surfaces shall be repaired with suitable cementitious leveling compound as recommended by the APJ supplier. The existing and repaired concrete surfaces shall provide continuous uniform support for the bridging plate and prevent the plate from rocking and deflecting.

Prior to the installation of the backer rod, all horizontal and vertical surfaces of the joint cutout shall be cleaned using a hot compressed air lance to remove any moisture and debris. The hot air lance shall be capable of producing an air stream at 3,000ºF with a velocity of 3,000 feet per second. Primer, if required, shall be applied to the joint cutout surfaces as recommended by the joint supplier.

Backer rod, with a diameter at least 25% greater than the existing joint opening at the time of installation, shall be installed in the existing deck joint opening between the concrete edges.

Prior to application, the binder shall be heated, with equipment recommended by the supplier, to a temperature within the supplier's recommended application temperature range. During application, the temperature of the binder shall be maintained within this range. In no case shall the temperature of the binder go below 350º F nor exceed the supplier's recommended maximum heating temperature.

After installing the backer rod in the deck joint opening, asphaltic binder shall then be poured into the joint opening until it completely fills the gap above the backer rod. A thin layer of binder shall next be applied to the all horizontal and vertical surfaces of the joint cutout.

Bridging plates shall be placed over the deck joint opening in the joint cutout. The plates shall be centered over the joint opening and secured with locating pins along its centerline. The plates shall be placed end to end, without overlap, such that the gap between plates does not exceed ¼". The plates shall extend to the gutter line, where concrete support exists on both sides of the joint. Within APJ installation limits, where concrete support does not exist at both sides of the joint

opening (such as where a bridge deck end abuts a bituminous concrete roadway shoulder), bridging plates shall not be installed. Installed bridging plates shall not rock or deflect in any way. After installation of bridging plates, asphaltic binder shall be applied to all exposed surfaces of the plates.

The remainder of the joint cutout shall then be filled with a matrix of hot asphaltic binder and aggregate prepared in accordance with the joint supplier's instructions and the following requirements: The aggregate shall be heated in a rotating drum mixer to the supplier's recommended minimum temperature, but not less than 350º F. Asphaltic binder material, heated separately to a temperature within the range specified in the supplier's written instructions, shall be added to the mixer in a proportional amount recommended by the manufacturer to coat the aggregate. The temperature of the aggregate and binder shall be monitored with a calibrated digital thermometer. All aggregate shall be fully coated with hot asphaltic binder in the mixer before placement in the joint cutout. The combined matrix of hot binder and aggregate shall be installed in the joint cutout in lifts. The combined matrix lift thickness shall not exceed the supplier's written instructions but shall not exceed 2 inches in any case. Each intermediate lift shall be leveled and flooded with hot binder to the level of the matrix aggregate to fill voids in the surface. Following installation of the matrix in the joint cutout, the joint shall be compacted and top-dressed in accordance with the supplier's written instructions.

The Contractor shall be responsible for removing all binder material that leaks through the joint and is deposited on any bridge component, including underside of decks, headers, beams, diaphragms, bearings, abutments and piers.

Traffic shall not be permitted over the joint until it has cooled to 130º F when measured with a digital infrared thermometer. Use of water to cool the completed joint is permitted.

Before placement of any sealing materials in parapets, curbs, or sidewalks, the joints shall be thoroughly cleaned of all scale, loose concrete, dirt, dust, or other foreign matter by abrasive blast cleaning. Residual dust and moisture shall then be removed by blasting with oil free compressed air using a hot air lance providing an air temperature and directional air velocity capacity recommended by the joint manufacturer. Projections of concrete into the joint space shall also be removed. The backer rod shall be installed in the joint as shown on the plans. The joint shall be clean and dry before the joint sealant is applied. Under no circumstances is the binder material to be used as a substitute for the joint sealant.

Whenever blast cleaning is performed under this specification the Contractor shall take adequate measures to ensure that the blast cleaning will not cause damage to adjacent traffic or other facilities.

The joint sealant shall be prepared and placed in accordance with the manufacturer's instructions and with the equipment prescribed by the manufacturer. Extreme care shall be taken to ensure that the sealant is placed in accordance with the manufacturer's recommended thickness requirements.

The joint sealant shall be tooled, if required, in accordance with the manufacturer's instructions.

Primer, if required, shall be supplied by the sealant manufacturer and applied in accordance with the manufacturer's instructions.

When the sealing operations are completed, the joints shall be effectively sealed against infiltration of water. Any sealant which does not effectively seal against water shall be removed and replaced at the Contractor's expense.

The Contractor must certify that the plug joints were installed in accordance with the supplier's recommendations.

Any installed APJ that exhibits evidence of failure such as debonding, cracking, rutting, or shoving of the matrix shall be removed and replaced full-width and full–depth to a length determined by the Engineer. The reinstallation of joint shall be in accordance with the approved Work quality Control Plan, as directed by the Engineer, following a determination of the cause of failure, all at no additional cost to the State.

Method of Measurement: This work will be measured for payment by the number of cubic feet of Asphaltic Plug Expansion Joint System installed and accepted within approved horizontal limits. No additional measurement will be made for furnishing and installing backer rod and joint sealant in the parapets, concrete medians, curbs and/or sidewalks.

Basis of Payment: This work will be paid for at the contract unit price per cubic foot for "Asphaltic Plug Expansion Joint System", complete in place, which price shall include the, sawcutting, removal and disposal of bituminous concrete, membrane waterproofing, and existing joint components and sealing elements, the furnishing and placement of the cementitious leveling compound, cleaning of the joint surfaces, furnishing and installing bridging plates, furnishing and installing the asphaltic plug joint matrix, the cost of furnishing and installing joint sealant in parapets and sidewalks, the cost of all services associated with the technical representative, and all other materials, equipment including but not limited to portable lighting, tools, and labor incidental thereto. No additional payment shall be made for the 12" wide bridging plates that are required for deck joint openings with widths in excess of 3".