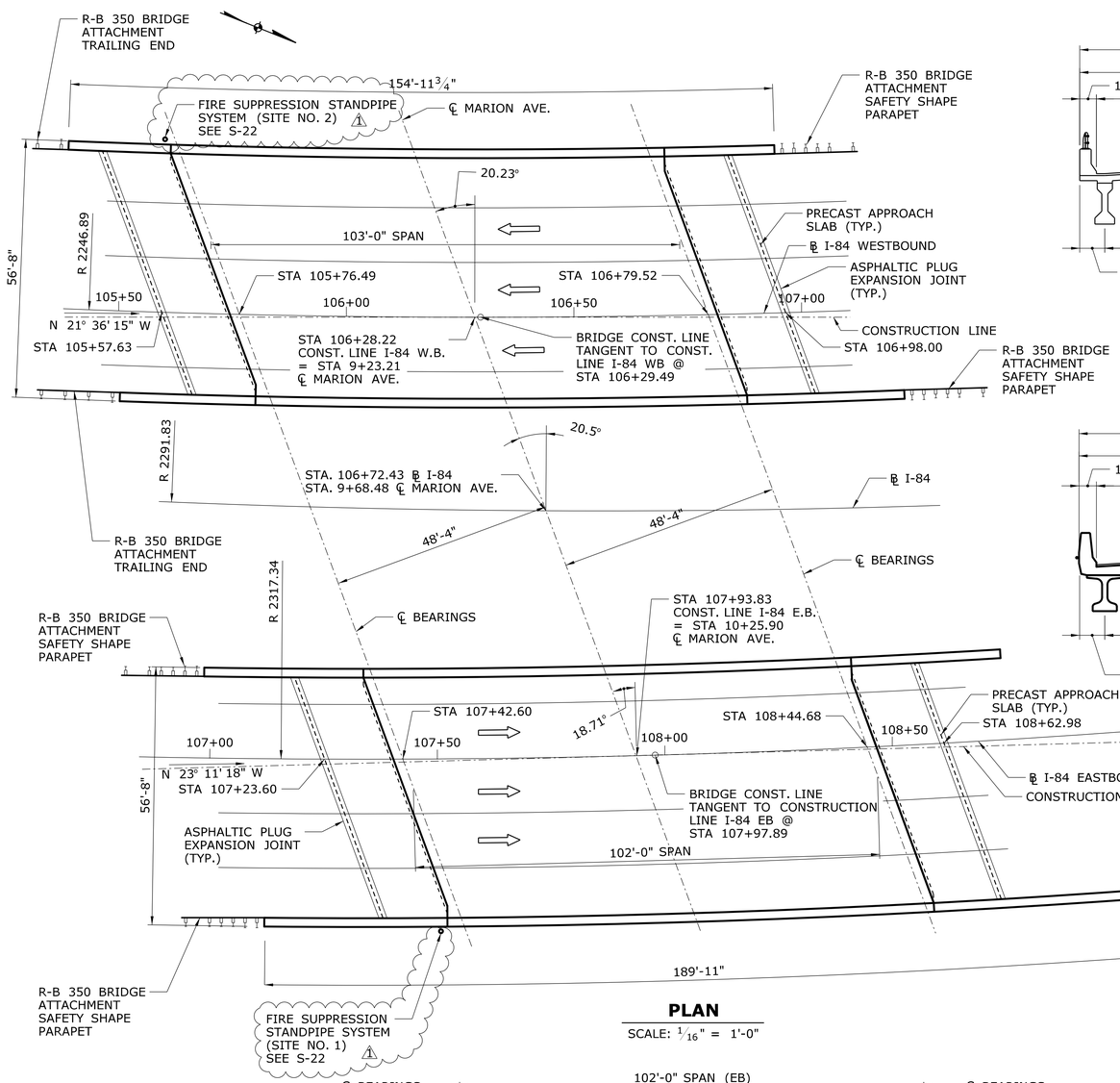

PLAN

SCALE: 1/16" = 1'-0"

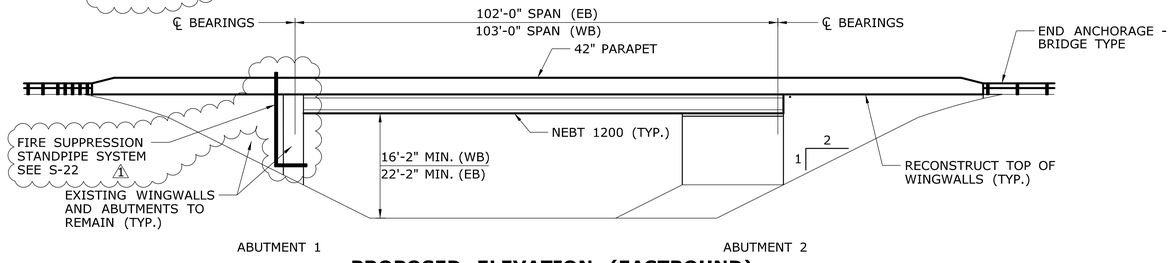

PROPOSED ELEVATION (EASTBOUND)

SCALE: 1/16" = 1'-0"

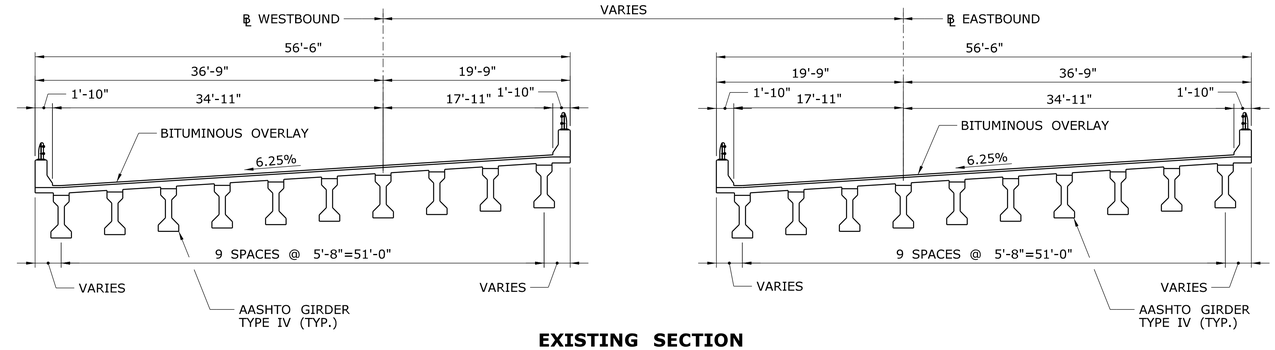

EXISTING SECTION

SCALE: 1/8" = 1'-0"

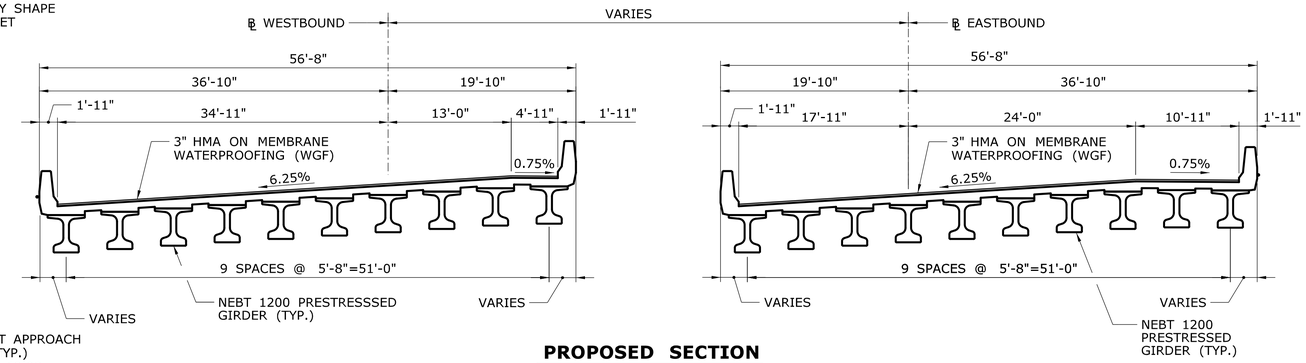

PROPOSED SECTION

SCALE: 1/8" = 1'-0"

NOTICE TO BRIDGE INSPECTORS

THE DEPARTMENT'S BRIDGE SAFETY PROCEDURES REQUIRE THIS BRIDGE TO BE INSPECTED FOR, BUT NOT LIMITED TO, ALL APPROPRIATE COMPONENTS INDICATED IN THE GOVERNING MANUALS FOR BRIDGE INSPECTION. ATTENTION MUST BE GIVEN TO INSPECTING THE FOLLOWING SPECIAL COMPONENTS AND DETAILS. (THE LISTING FOR COMPONENTS FOR SPECIFIC ATTENTION SHALL NOT BE CONSTRUED TO REDUCE THE IMPORTANCE OF INSPECTION OF ANY OTHER COMPONENT OF THE STRUCTURE) THE FREQUENCY OF INSPECTION OF THIS STRUCTURE SHALL BE IN ACCORDANCE WITH THE GOVERNING MANUALS FOR BRIDGE INSPECTION, UNLESS OTHERWISE DIRECTED BY THE MANAGER OF BRIDGE SAFETY AND EVALUATION.

COMPONENT OR DETAIL	STRUCTURE SHEET REFERENCE
-	-
-	-

CONCRETE DISTRIBUTION		
SUPERSTRUCTURE	C.Y.	580
SUBSTRUCTURE	C.Y.	70
FOOTINGS	C.Y.	0
TOTAL	C.Y.	650

INSPECTION OF FIELD WELDS		
METHODS	UNIT	QUANTITY
ULTRASONIC	INCH	NONE
MAGNETIC PARTICLE	FEET	NONE

ESTIMATED SHIPPING DATA				
MEMBER	SHIPPING LENGTH	SHIPPING HEIGHT	SHIPPING WIDTH	SHIPPING WEIGHT
G11 TO G20	103.5'	4'-0"	4'-0"	87,000 lbs.
G1 TO 10	104.5'	4'-0"	4'-0"	87,500 lbs.

Digitally signed by Andrew Lessard
Date: 2013.03.26 16:26:59-04'00'

ADDENDUM NO. 3

REV.	DATE	REVISION DESCRIPTION	SHEET NO.
-	-	-	-
-	-	-	-
-	-	-	-
-	-	-	-
-	-	-	-
1	3/26/13	ADD FIRE SUPPRESSION STANDPIPE SYSTEM	03.02

THE INFORMATION, INCLUDING ESTIMATED QUANTITIES OF WORK, SHOWN ON THESE SHEETS IS BASED ON LIMITED INVESTIGATIONS BY THE STATE AND IS IN NO WAY WARRANTED TO INDICATE THE CONDITIONS OF ACTUAL QUANTITIES OF WORK WHICH WILL BE REQUIRED.

Plotted Date: 3/26/2013

DESIGNER/DRAFTER: MJM
CHECKED BY: AML
SCALE AS NOTED

STATE OF CONNECTICUT
DEPARTMENT OF TRANSPORTATION

Filename: ...\SB_02_GenPlan_A3.dgn

SIGNATURE/BLOCK:
Stantec Consulting Services Inc.
2321 Whitney Ave.
Hamden, CT 06518

PROJECT TITLE:
REHABILITATION OF BRIDGES 01235 & 01236 I-84 EB & WB OVER MARION AVENUE

TOWN: **SOUTHINGTON**

DRAWING TITLE: **GENERAL PLAN**

PROJECT NO. 131-194 131-195
DRAWING NO. S-02
SHEET NO. 04.02.A3

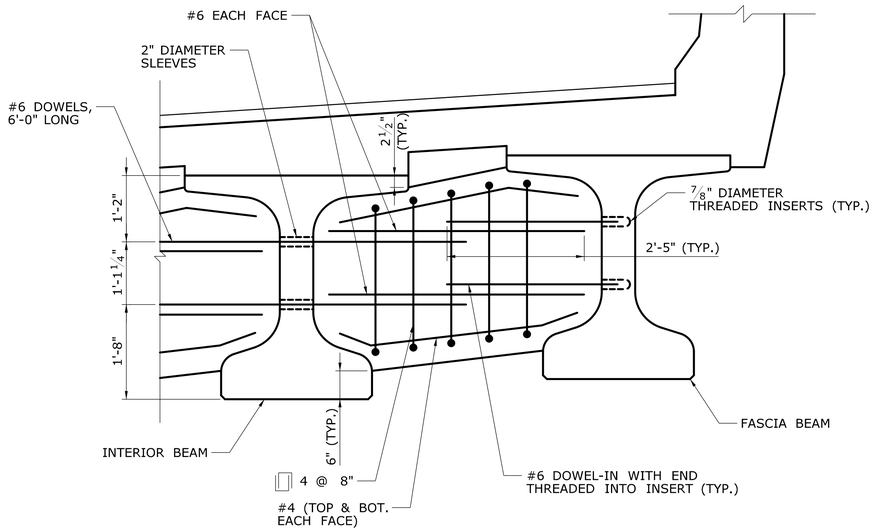

TYPICAL INTERMEDIATE DIAPHRAGM

SCALE: 3/4" = 1'-0"

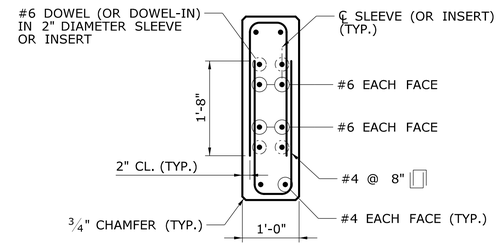

INTERMEDIATE DIAPHRAGM SECTION

SCALE: 3/4" = 1'-0"

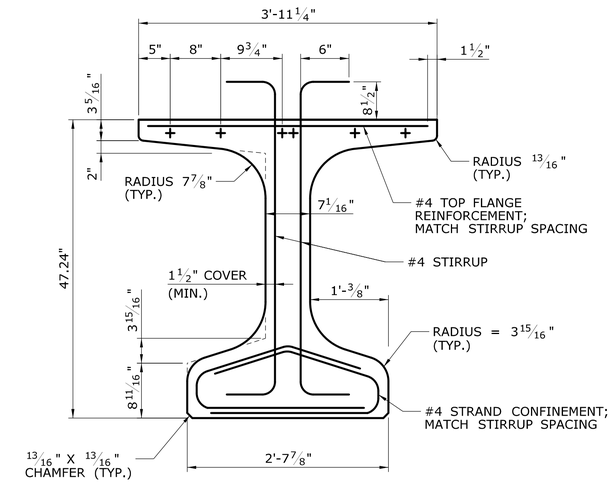

BEAM DETAIL

SCALE: 1" = 1'-0"

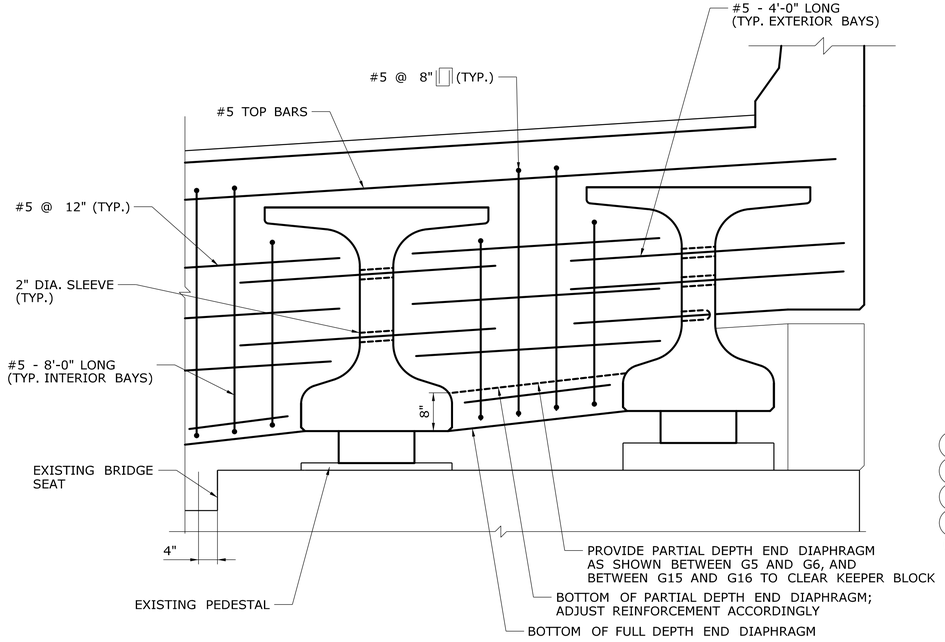

TYPICAL END DIAPHRAGM

SCALE: 3/4" = 1'-0"

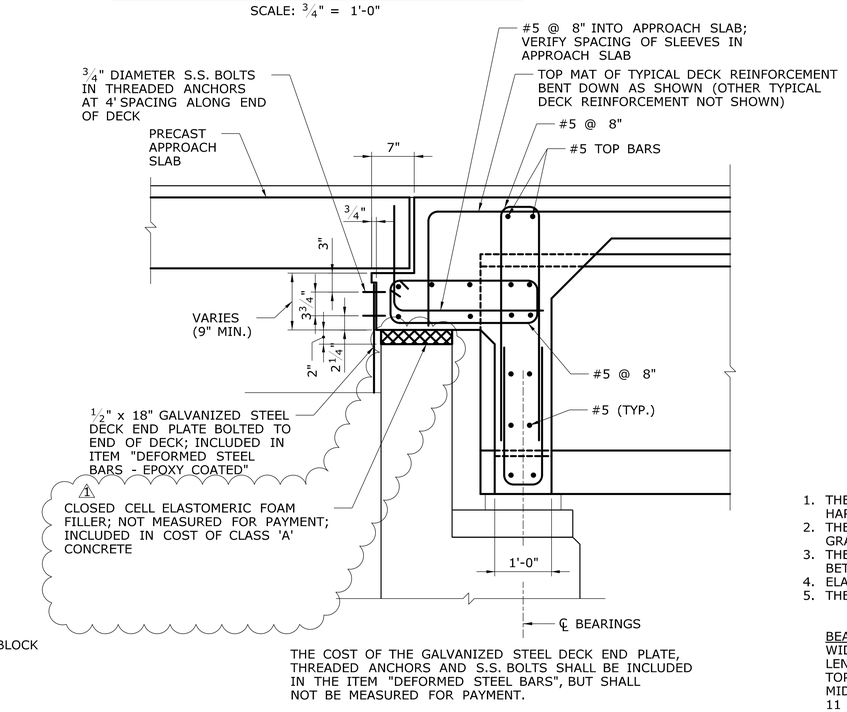

THE COST OF THE GALVANIZED STEEL DECK END PLATE, THREADED ANCHORS AND S.S. BOLTS SHALL BE INCLUDED IN THE ITEM "DEFORMED STEEL BARS", BUT SHALL NOT BE MEASURED FOR PAYMENT.

END DIAPHRAGM SECTION

SCALE: 3/4" = 1'-0"

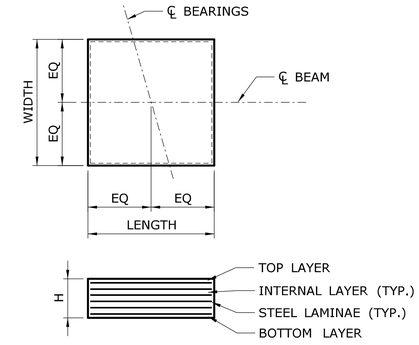

ELASTOMERIC BEARING DETAILS

N.T.S.

1. THE ELASTOMER SHALL BE TYPE CR, GRADE 3 AND SHALL HAVE A SHORE 'A' DUROMETER HARDNESS OF 50±5 POINTS.
2. THE STEEL LAMINAE SHALL COMFORM TO ASTM A570, GRADE 36 AND OR 40, ASTM A611, GRADE C OR D, OR APPROVED EQUAL, AND SHALL HAVE 3/16" SIDE COVER.
3. THE ELASTOMERIC BEARING SHALL BE INSTALLED WHEN THE AMBIENT TEMPERATURE IS BETWEEN 40° F AND 90° F AND HAS BEEN IN THAT RANGE FOR AT LEAST TWO HOURS.
4. ELASTOMERIC SHIMS SHALL BE INSTALLED IN ACCORDANCE WITH THE SPECIAL PROVISIONS.
5. THE STEEL LAMINATED BEARINGS SHALL BE FABRICATED AS FOLLOWS:

BEARING	G1 TO G8 G11 TO G19	G9 G20	G10
WIDTH	16"	16"	16"
LENGTH	16"	14"	14"
TOP & BOTTOM LAYER	0.25"	0.20"	0.20"
MIDDLE LAYERS	9 @ 0.40"	5 @ 0.40"	7 @ 0.40"
11 GA STEEL LAMINAE	10 @ 0.1196"	6 @ 0.1196"	8 @ 0.1196"
TOTAL THICKNESS (H)	5.30"	3.12"	4.16"

ADDENDUM NO. 3

REV.	DATE	REVISION DESCRIPTION	SHEET NO.
-	-	-	-
-	-	-	-
-	-	-	-
-	-	-	-
-	-	-	-
1	3/26/13	REVISE END DIAPHRAGM SECTION DETAIL	04.17

THE INFORMATION, INCLUDING ESTIMATED QUANTITIES OF WORK, SHOWN ON THESE SHEETS IS BASED ON LIMITED INVESTIGATIONS BY THE STATE AND IS IN NO WAY WARRANTED TO INDICATE THE CONDITIONS OF ACTUAL QUANTITIES OF WORK WHICH WILL BE REQUIRED.

Plotted Date: 3/26/2013

DESIGNER/DRAFTER: MJM
CHECKED BY: AML
SCALE AS NOTED

STATE OF CONNECTICUT
DEPARTMENT OF TRANSPORTATION

Filename: ...\SB_17_FramingDetails2_A3.dgn

SIGNATURE/BLOCK:
Stantec Consulting Services Inc.
2321 Whitney Ave.
Hamden, CT 06518

PROJECT TITLE:
REHABILITATION OF BRIDGES 01235 & 01236 I-84 EB & WB OVER MARION AVENUE

TOWN: **SOUTHINGTON**

DRAWING TITLE: **FRAMING DETAILS**

PROJECT NO. 131-194 131-195
DRAWING NO. S-17
SHEET NO. 04.17.A3

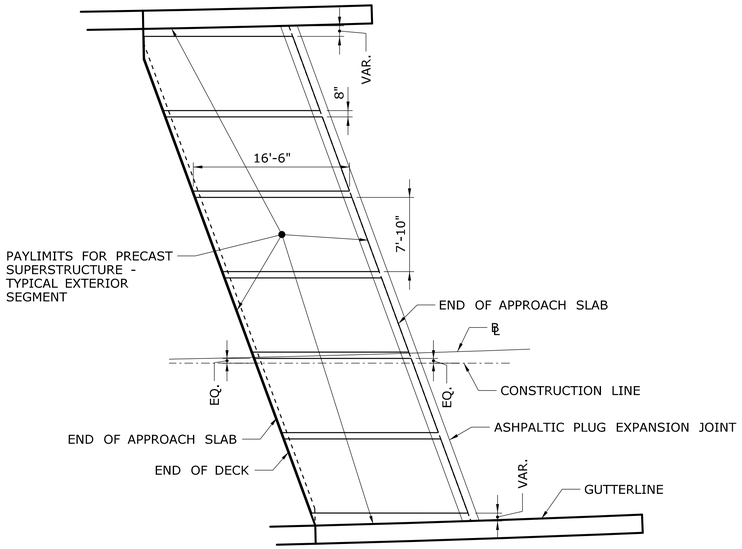

TYPICAL PRECAST APPROACH SLAB LAYOUT

SCALE: 1/8" = 1'-0"

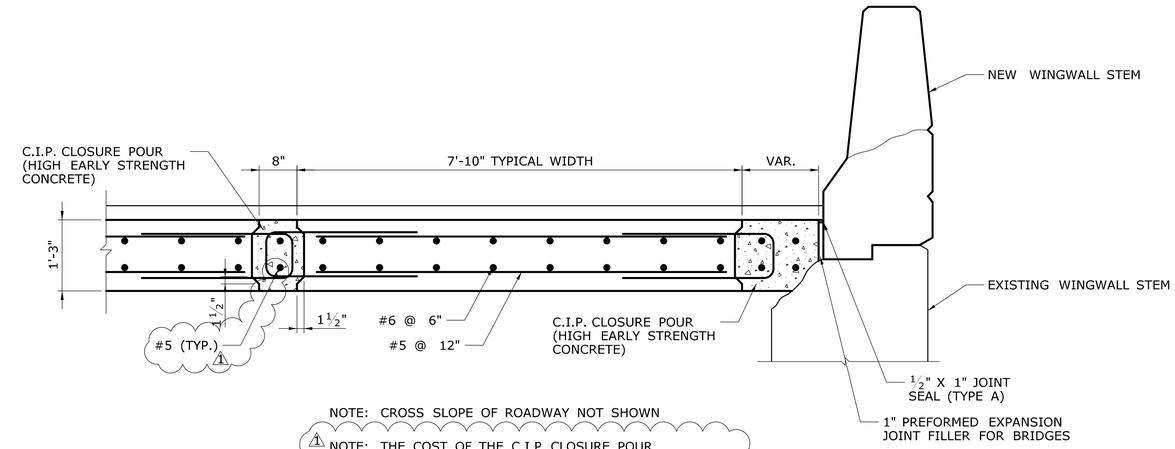

NOTE: CROSS SLOPE OF ROADWAY NOT SHOWN

NOTE: THE COST OF THE C.I.P. CLOSURE POUR, REINFORCEMENT, AND CONTROLLED DENSITY FILL SHALL BE INCLUDED IN THE ITEM "PRECAST SUPERSTRUCTURE - TYPICAL EXTERIOR SEGMENT", AND WILL NOT BE MEASURED FOR PAYMENT. SEE SPECIAL PROVISIONS.

TYPICAL PRECAST APPROACH SLAB SECTION

SCALE: 3/4" = 1'-0"

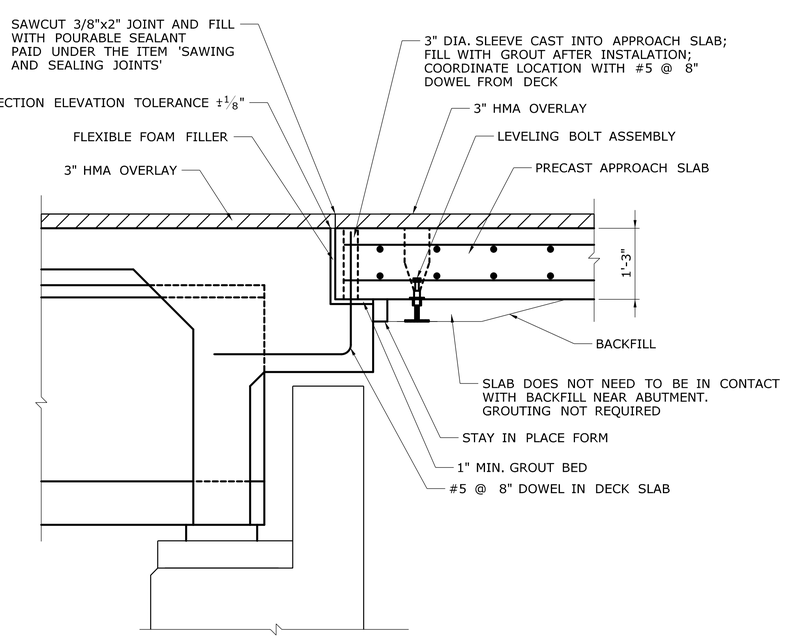

APPROACH SLAB AT ABUTMENT

SCALE: 3/4" = 1'-0"

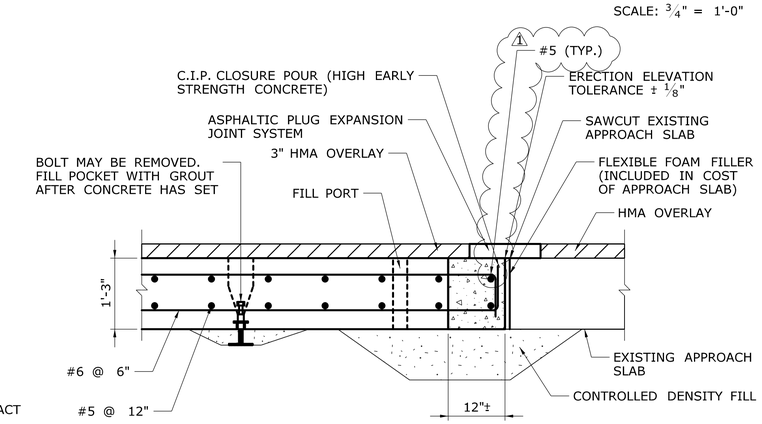

NOTE: THE COST OF THE C.I.P. CLOSURE POUR, REINFORCEMENT, AND CONTROLLED DENSITY FILL SHALL BE INCLUDED IN THE ITEM "PRECAST SUPERSTRUCTURE - TYPICAL EXTERIOR SEGMENT", AND WILL NOT BE MEASURED FOR PAYMENT. SEE SPECIAL PROVISIONS.

NOTES:

1. SAWCUT EXISTING APPROACH SLAB AS SHOWN. REMOVE EXISTING APPROACH SLAB BETWEEN BRIDGE ABUTMENT AND SAWCUT LINE.

2. EXCAVATE TRENCH UNDER END OF APPROACH SLAB END PRIOR TO INSTALLATION.

3. SET APPROACH SLAB ON GRADE. ADJUST ELEVATIONS USING LEVELING DEVICE. SHIMS MAY BE USED IN LIEU OF LEVELING BOLTS.

4. FILL VOID UNDER SLAB END WITH CONTROLLED DENSITY FILL THROUGH EXCAVATION AND PORTS IN SLAB.

5. CONSTRUCT APPROACH ROADWAY AND OVERLAY.

APPROACH SLAB AT END

SCALE: 3/4" = 1'-0"

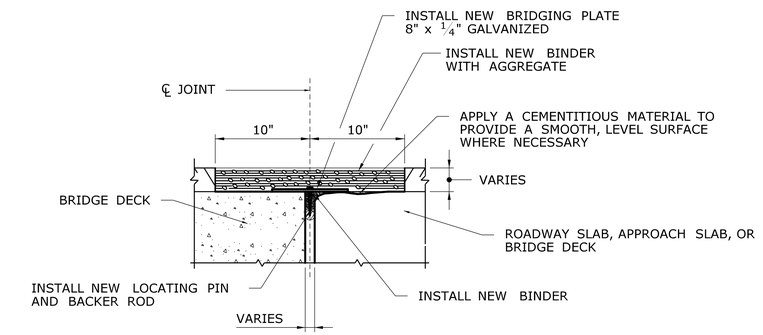

INSTALLATION OF ASPHALTIC PLUG EXPANSION JOINT SYSTEM

SCALE: 1 1/2" = 1'-0"

NOTES:

1. THE STEEL PLATES SHALL CONFORM TO THE REQUIREMENTS OF AASHTO M270 GRADE 36. THE STEEL PLATES AND WELDED STUDS SHALL BE HOT DIPPED GALVANIZED IN CONFORMANCE WITH ASTM A123 AFTER FABRICATION.
2. AFTER PAVING, SAWCUT THE NEW OVERLAY FULL DEPTH AND REMOVE THE BITUMINOUS CONCRETE OVERLAY AND MEMBRANE WITHIN THE LIMITS OF THE JOINT SYSTEM. THIS WORK TO BE PAID FOR UNDER THE ITEM 'ASPHALTIC PLUG EXPANSION JOINT SYSTEM' (SEE SPECIAL PROVISION).
3. REFER TO SPECIAL PROVISIONS FOR ALLOWABLE BRIDGE SUPERSTRUCTURE TEMPERATURE RANGES DURING ASPHALTIC PLUG EXPANSION JOINT INSTALLATION.
4. SEALING OF PARAPET JOINTS IS PAID FOR UNDER ITEM 'ASPHALTIC PLUG EXPANSION JOINT SYSTEM'.
5. THE MAXIMUM DESIGN THERMAL MOVEMENT RANGE AT EACH EXPANSION JOINT IS 1/2".
6. THE CLOSED CELL BACKER ROD SHALL BE PLACED A MINIMUM OF 2" FROM THE OUTSIDE FACE OF CURBS.
7. THE NON-SAGGING SILICONE SEALANT SHALL BE PLACED ON THE BACKER ROD 1/2" THICK. AT THE GUTTER, THE SILICONE SEALANT SHALL BE PLACED FLUSH WITH THE OUTSIDE FACE OF CONCRETE.
8. PRIOR TO INSTALLING THE SILICONE SEALANT, CLEAN JOINTS BY SANDBLASTING. DUST SHALL BE REMOVED BY THE METHOD APPROVED BY THE ENGINEER. THIS WORK SHALL BE PAID FOR UNDER THE ITEM "ASPHALTIC PLUG EXPANSION JOINT SYSTEM". (SEE SPECIAL PROVISIONS).

ADDENDUM NO. 3

REV.	DATE	REVISION DESCRIPTION	SHEET NO.
-	-	-	-
-	-	-	-
-	-	-	-
-	-	-	-
-	-	-	-
1	3/26/13	ADD NOTES AND REVISE CALLOUTS	04.20

THE INFORMATION, INCLUDING ESTIMATED QUANTITIES OF WORK, SHOWN ON THESE SHEETS IS BASED ON LIMITED INVESTIGATIONS BY THE STATE AND IS IN NO WAY WARRANTED TO INDICATE THE CONDITIONS OF ACTUAL QUANTITIES OF WORK WHICH WILL BE REQUIRED.

Plotted Date: 3/26/2013

DESIGNER/DRAFTER: MJM
CHECKED BY: AML
SCALE AS NOTED

STATE OF CONNECTICUT
DEPARTMENT OF TRANSPORTATION

Filename: ...\SB_20_Deck_Details2_A3.dgn

SIGNATURE/BLOCK:
Stantec Consulting Services Inc.
2321 Whitney Ave.
Hamden, CT 06518

PROJECT TITLE:
REHABILITATION OF BRIDGES 01235 & 01236 I-84 EB & WB OVER MARION AVENUE

TOWN: **SOUTHINGTON**

DRAWING TITLE: **DECK DETAILS**

PROJECT NO. 131-194 131-195
DRAWING NO. S-20
SHEET NO. 04.20.A3

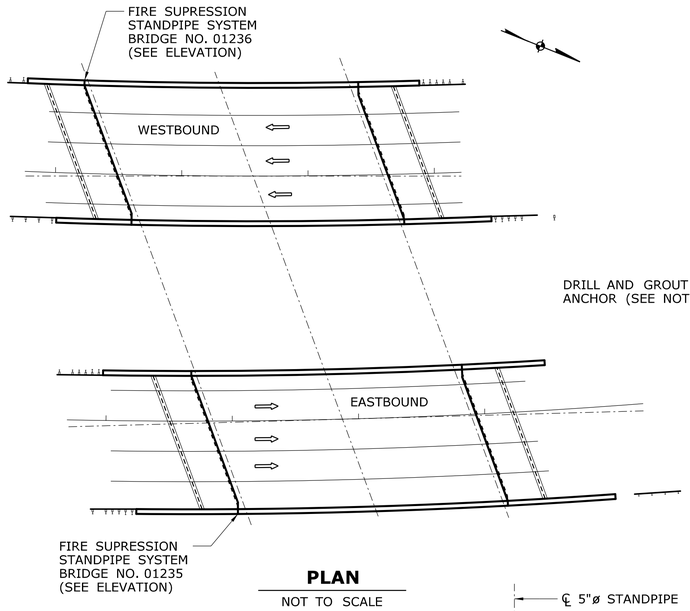

PLAN

NOT TO SCALE

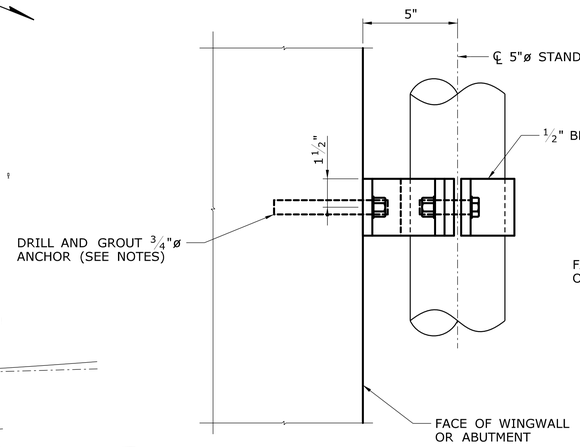

ELEVATION

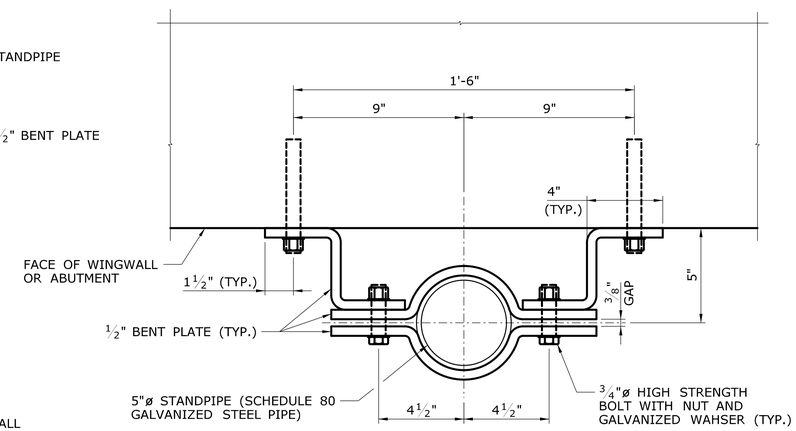

PLAN

BRACKET DETAIL

SCALE: 3" = 1'-0"

STANDPIPE NOTES:

1. PIPE FOR STANDPIPE SHALL BE SCHEDULE 80, HOT DIP GALVANIZED, WELDED AND SEAMLESS PIPE CONFORMING TO ASTM A53 (GRADE B).
2. ELBOWS AND FITTINGS SHALL BE MALLEABLE IRON CONFORMING TO ASTM 197 AND GALVANIZED IN ACCORDANCE WITH ASTM A153.
3. STRUCTURAL STEEL FOR STANDPIPE BRACKETS AND SUPPORTS SHALL CONFORM TO ASTM A709, GRADE 36 OR 50, AND SHALL BE GALVANIZED IN ACCORDANCE WITH ASTM A123.
4. BOLTS SHALL CONFORM TO ASTM A325 AND ANCHOR RODS SHALL BE MECHANICALLY GALVANIZED IN ACCORDANCE WITH ASTM B695, CLASS 50.
5. THE CONTRACTOR SHALL SUBMIT SHOP DRAWINGS INCLUDING ALL FIELD VERIFIED MEASUREMENTS AT EACH STANDPIPE SYSTEM LOCATION.
6. THE COST OF ALL PIPE FITTINGS, SUPPORT BRACKETS, END CONNECTIONS, LOCKING CAPS, DRILLING AND GROUTING ANCHORS AND INSTALLATION OF STANDPIPE LOCATION SIGNS SHALL BE INCLUDED IN THE ITEM "FIRE SUPPRESSION STANDPIPE SYSTEM," SEE SPECIAL PROVISIONS.

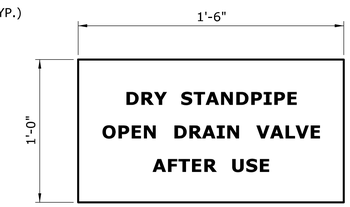

FIRE SUPPRESSION SYSTEM STANDPIPE SIGN

NOT TO SCALE

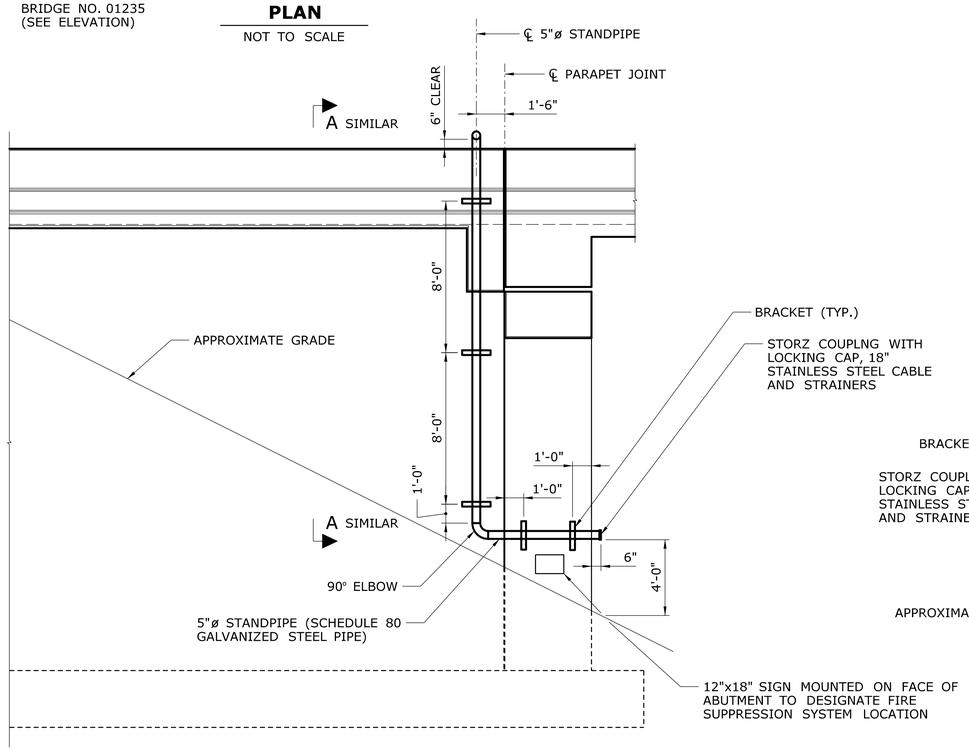

ELEVATION BRIDGE NO. 01235

SCALE: ¼" = 1'-0"

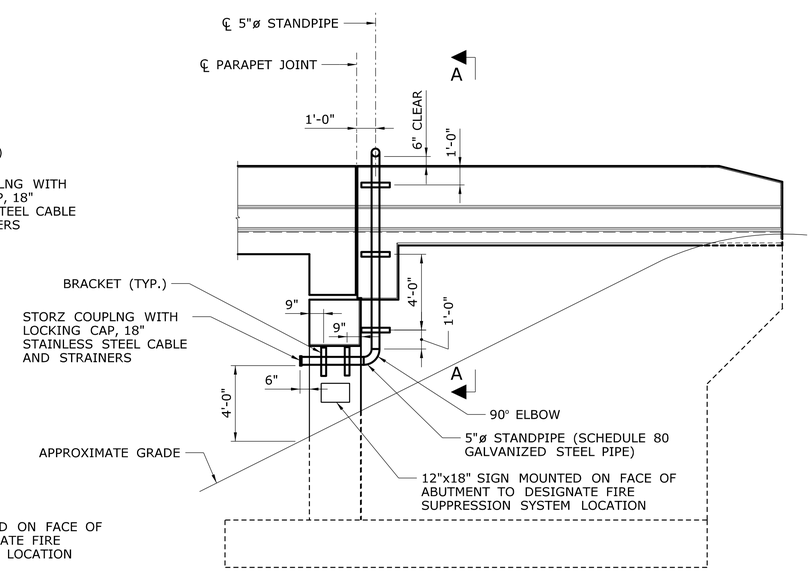

ELEVATION BRIDGE NO. 01236

SCALE: ¼" = 1'-0"

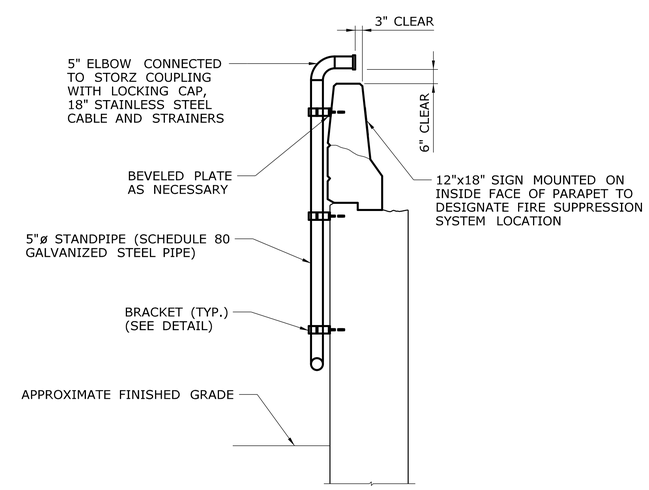

SECTION A-A

SCALE: ⅜" = 1'-0"

NEW SHEET ADDED BY ADDENDUM NO. 3

REV.	DATE	REVISION DESCRIPTION	SHEET NO.

THE INFORMATION, INCLUDING ESTIMATED QUANTITIES OF WORK, SHOWN ON THESE SHEETS IS BASED ON LIMITED INVESTIGATIONS BY THE STATE AND IS IN NO WAY WARRANTED TO INDICATE THE CONDITIONS OF ACTUAL QUANTITIES OF WORK WHICH WILL BE REQUIRED.

Plotted Date: 3/21/2013

DESIGNER/DRAFTER: JRA
CHECKED BY: AML
SCALE AS NOTED

STATE OF CONNECTICUT
DEPARTMENT OF TRANSPORTATION

Filename: ...\SB_22_Standpipe.dgn

SIGNATURE/BLOCK:

Stantec Consulting Services Inc.
2321 Whitney Ave.
Hamden, CT 06518

PROJECT TITLE:
REHABILITATION OF BRIDGES 01235 & 01236 I-84 EB & WB OVER MARION AVENUE

TOWN: SOUTHINGTON

DRAWING TITLE:
FIRE SUPPRESSION STANDPIPE SYSTEM

PROJECT NO. 131-194 131-195
DRAWING NO. S-22
SHEET NO. 04.22.A3