BEGIN SPN 63-601
RECONSTRUCTION OF THE
FLATBUSH AVENUE CONNECTOR
(STATE ROAD 504)
STA 105+50.00
N 831,907.16
E 1,010,463.65
MATCH EXISTING

PT STA. 106+72.38
N 832,016.94
E 1,010,516.99

PT STA. 121+55.33
N 833,240.60
E 1,011,351.34

PC STA. 119+19.15
N 833,059.96
E 1,011,200.02

PC STA. 327+23.26
N 833,626.38
E 1,011,768.16

PC STA. 126+97.09
N 833,612.25
E 1,011,745.52

BL STA. 127+23.26 BACK =
OFF RAMP STA. 227+23.26 FORWARD (5.25' LF) =
ON RAMP STA. 327+23.26 FORWARD (5.25' RT)

PC STA. 228+25.67
N 833,704.28
E 1,011,835.47

PT STA. 330+12.89
N 833,776.48
E 1,012,013.45

PT STA. 230+34.91
N 833,840.01
E 1,011,994.60

END OF FULL DEPTH
SPN 63-601
RECONSTRUCTION OF THE
FLATBUSH AVENUE CONNECTOR
(STATE ROAD 504)
STA. 232+00
N 833,940.75
E 1,012,125.39
MATCH EXISTING

PC STA. 331+97.29
N 833,838.36
E 1,012,187.16

PT STA. 335+42.85
N 834,016.42
E 1,012,480.53

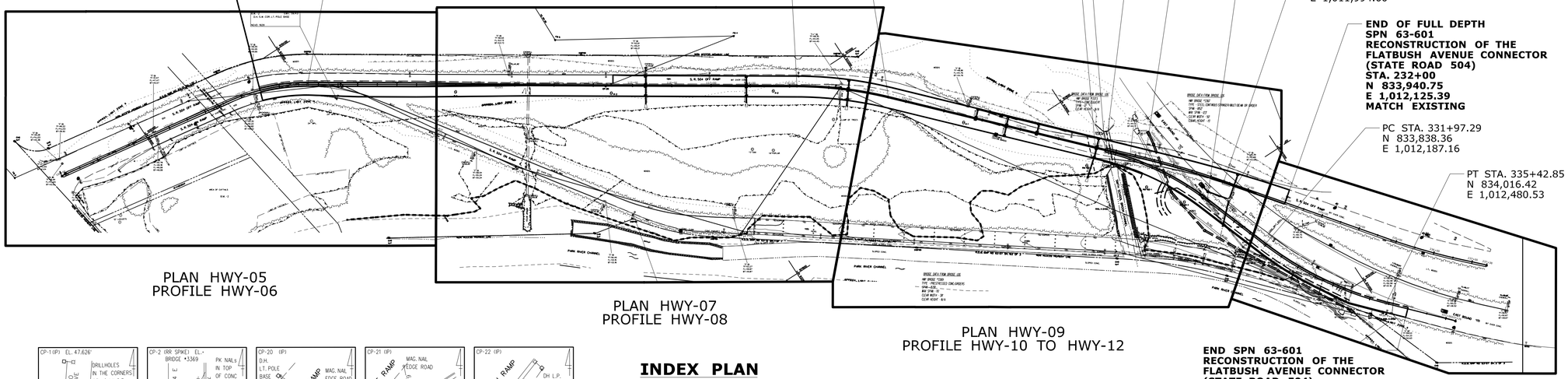

PLAN HWY-05
PROFILE HWY-06

PLAN HWY-07
PROFILE HWY-08

PLAN HWY-09
PROFILE HWY-10 TO HWY-12

END SPN 63-601
RECONSTRUCTION OF THE
FLATBUSH AVENUE CONNECTOR
(STATE ROAD 504)
STA. 336+00
N 834,055.32
E 1,012,522.40
MATCH EXISTING

PLAN HWY-13
PROFILE HWY-14 & HWY-15

INDEX PLAN

SCALE 1" = 150'

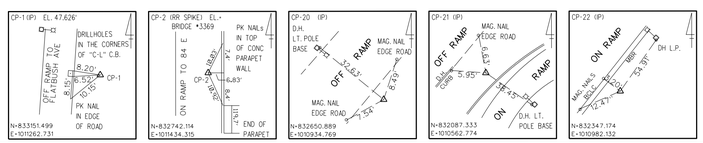

CONTROL POINTS

GENERAL NOTES:

1. THE CONTRACTOR SHALL DETERMINE FOR HIMSELF , PRIOR TO BIDDING, THE SIZE, LOCATIONS, ELEVATIONS, AND EXISTENCE OF ALL SUCH UTILITIES AND FEATURES THAT MAY AFFECT HIS CONSTRUCTION OPERATIONS. THE CONTRACTOR SHALL ADEQUATELY SUPPORT ALL UTILITIES AND SHALL BE RESPONSIBLE FOR ALL DAMAGE. CALL BEFORE YOU DIG 1-800-922-4455, AT LEAST 48 HOURS PRIOR TO STARTING CONSTRUCTION. CONTRACTOR TO COORDINATE ACTIVITIES WITH INDIVIDUAL UTILITY COMPANY REPRESENTATIVES.

2. THE CONTRACTOR SHALL NOTIFY THE RESIDENT ENGINEER SHOULD THERE BE ANY CONFLICT BETWEEN EXISTING UTILITIES AND PROPOSED CONSTRUCTION.

3. ALL DIMENSIONS,ELEVATIONS AND EXISTING CONDITIONS SHALL BE FIELD VERIFIED BY THE CONTRACTOR PRIOR TO CONSTRUCTION. ANY DISCREPANCIES SHALL BE REPORTED TO THE RESIDENT ENGINEER.

4. ALL SEDIMENTATION AND EROSION CONTROL MEASURES SHALL BE INSPECTED AND MAINTAINED ON A REGULAR BASIS AS OUTLINED HEREIN:
INSPECTION AND MAINTENANCE SHALL BE CARRIED OUT THROUGHOUT THE CONSTRUCTION PERIOD AND UNTIL ALL DISTURBED AREAS ARE STABILIZED WITH VEGETATION OR PAVING. THE MINIMUM INSPECTION PERIOD SHALL BE WEEKLY AND OR AFTER MAJOR STORMS.

5. THE CONTRACTOR IS RESPONSIBLE TO ENSURE THAT PROPER STORM DRAINAGE FLOWS ARE MAINTAINED THROUGHOUT CONSTRUCTION.

6. DURING CONSTRUCTION, SEDIMENTATION CONTROL SYSTEMS WILL BE INSTALLED AROUND ALL CATCH BASINS LOCATED IN LOW POINTS AS WELL AS IN LOCATIONS DIRECTED BY THE ENGINEER.

7. ALL EXISTING CATCH BASINS WITHIN THE PROJECT LIMITS SHALL BE CLEANED. 1

8. ALL EXISTING DRAINAGE PIPE AND STRUCTURES TO BE REMOVED SHALL BE PAID FOR AS "TRENCH EXCAVATION" FOR PIPES AND "ROCK-IN-TRENCH EXCAVATION" FOR STRUCTURES.

9. ALL PERMITS ARE TO BE ACQUIRED PRIOR TO THE BEGINNING OF CONSTRUCTION.

10. STORAGE OF MATERIALS THAT COULD BE INJURIOUS TO HUMAN HEALTH OR THE ENVIRONMENT IN THE EVENT OF FLOODING IS PROHIBITED BELOW THE 500 YEAR FLOOD ELEVATION OF 31.9. OTHER MATERIAL OR EQUIPMENT MAY BE STORED BELOW THE 500 YEAR FLOOD ELEVATION PROVIDED THAT SUCH MATERIAL OR EQUIPMENT IS NOT SUBJECT TO MAJOR DAMAGE BY FLOODS AND PROVIDED THAT SUCH MATERIAL IS FIRMLY ANCHORED, RESTRAINED OR ENCLOSED TO PREVENT IT FROM FLOATING AWAY OR THAT SUCH MATERIAL OR EQUIPMENT CAN BE REMOVED PRIOR TO FLOODING.

11. ALL MENTION OF SUPERPAVE FOUND IN THE PLANS, AND SPECIAL PROVISIONS REFERS TO HOT MIX ASPHALT (HMA). "SEE NOTICE TO CONTRACTOR- SECTION 4.06 AND M.04 MIX DESIGNATION EQUIVALENCY " FOUND IN THE SPECIAL PROVISIONS.

12. 400 FOOT GRID BASED ON CONNECTICUT COORDINATE SYSTEM NAD 1983.

13. VERTICAL DATUM BASED ON NGVD OF 1929.

LIST OF DRAWINGS IN SUBSET 03 - HIGHWAY

DRAWING NO.	TITLE
HWY-01	INDEX PLAN/PROFILES, CONTROL POINTS & GENERAL NOTES
HWY-02	ROADWAY TYPICAL SECTIONS
HWY-03	ROADWAY SUPERELEVATED AND SURCHARGE TYPICAL SECTIONS
HWY-04	ROADWAY EXPANDED POLYSTYRENE TYPICAL SECTIONS
HWY-05	ROADWAY PLAN STA 100+00 TO 110+00
HWY-06	ROADWAY PROFILE STA 100+00 TO 110+00
HWY-07	ROADWAY PLAN STA 100+00 TO 121+00
HWY-08	ROADWAY PROFILE STA 110+00 TO 121+00
HWY-09	ROADWAY PLAN STA 121+00 TO 231+50 & 331+59
HWY-10	ROADWAY PROFILE STA 121+00 TO 127+23.26
HWY-11	ROADWAY PROFILE STA 227+23.26 TO 231+50
HWY-12	ROADWAY PROFILE STA 327+23.26 TO 331+59
HWY-13	ROADWAY PLAN STA 231+50 TO 232+00 & STA 331+59 TO 336+00
HWY-14	ROADWAY PROFILE STA 231+50 TO 232+00
HWY-15	ROADWAY PROFILE 331+59 TO 336+00
HWY-16	MISCELLANEOUS DETAILS
HWY-17	MISCELLANEOUS DETAILS 2
HWY-18	ROADWAY BORING LOGS

DESIGNED BY:
CONSULTANT COMPANY NAME

Weston&Sampson
273 Dividend Road, Rocky Hill, CT 06067
(860) 513-1473 (800) SAMPSON
www.westonandsampson.com

STATE OF CONNECTICUT ALAN L. NAFIS No. 12856 LICENSED PROFESSIONAL ENGINEER

Alan L. Nafis
2013.04.16
11:57:20
-04'00'

ADDENDUM NO. 2

REV.	DATE	REVISION DESCRIPTION	SHEET NO.
-	-	-	-
-	-	-	-
-	-	-	-
-	-	-	-
-	-	-	-
1	4/13	ADDENDUM NO. 2	-

THE INFORMATION, INCLUDING ESTIMATED QUANTITIES OF WORK, SHOWN ON THESE SHEETS IS BASED ON LIMITED INVESTIGATIONS BY THE STATE AND IS IN NO WAY WARRANTED TO INDICATE THE CONDITIONS OF ACTUAL QUANTITIES OF WORK WHICH WILL BE REQUIRED.

Plotted Date: 4/16/2013

DESIGNER/DRAFTER: **S.T.WEIER**
CHECKED BY: **A.L.NAFIS**
SCALE IN FEET
0 150 300
SCALE 1"=150'

STATE OF CONNECTICUT
DEPARTMENT OF TRANSPORTATION

Filename: ...\HW_MST_0063_0601_03_01_INX.dgn

SIGNATURE/BLOCK:
Weston&Sampson
273 Dividend Road, Rocky Hill, CT 06067
(860) 513-1473 (800) SAMPSON
www.westonandsampson.com

STATE OF CONNECTICUT ALAN L. NAFIS No. 12856 LICENSED PROFESSIONAL ENGINEER

PROJECT TITLE:
RECONSTRUCTION OF THE FLATBUSH AVENUE CONNECTOR (STATE ROAD 504)

TOWN: **HARTFORD**

DRAWING TITLE: **INDEX PLAN/PROFILES, CONTROL POINTS & GENERAL NOTES**

PROJECT NO. **63-601**
DRAWING NO. **HWY-01**
SHEET NO. **01.03.01.A2**

Border Version: 11/14/08

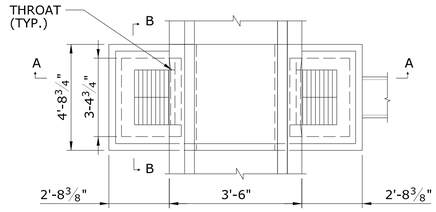

PLAN
NTS
TYPE 'C-M-2' CATCH BASIN

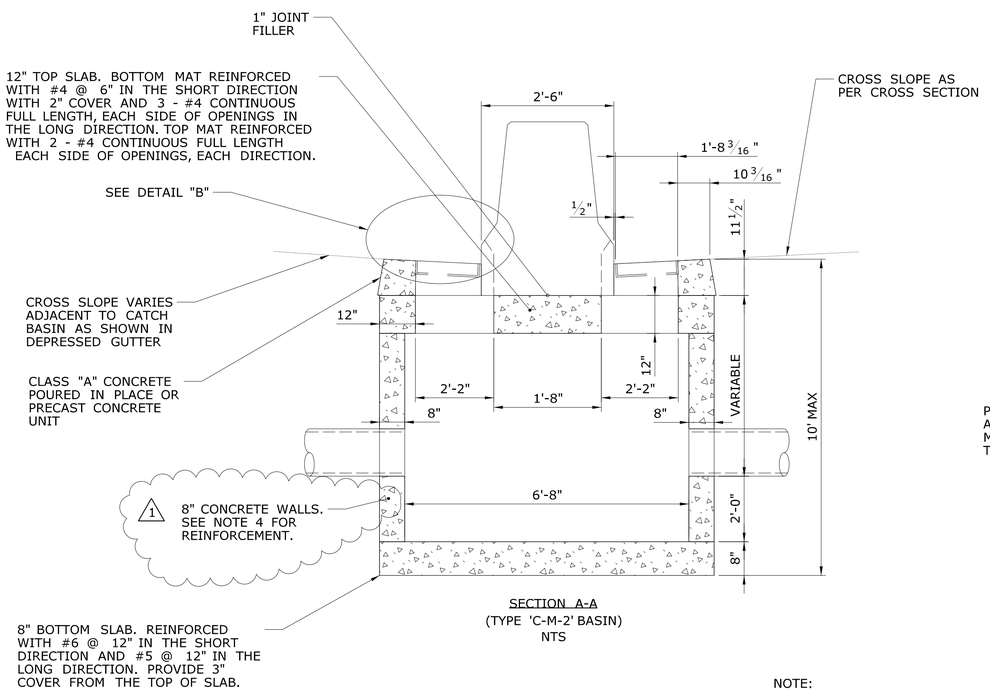

SECTION A-A
(TYPE 'C-M-2' BASIN)
NTS

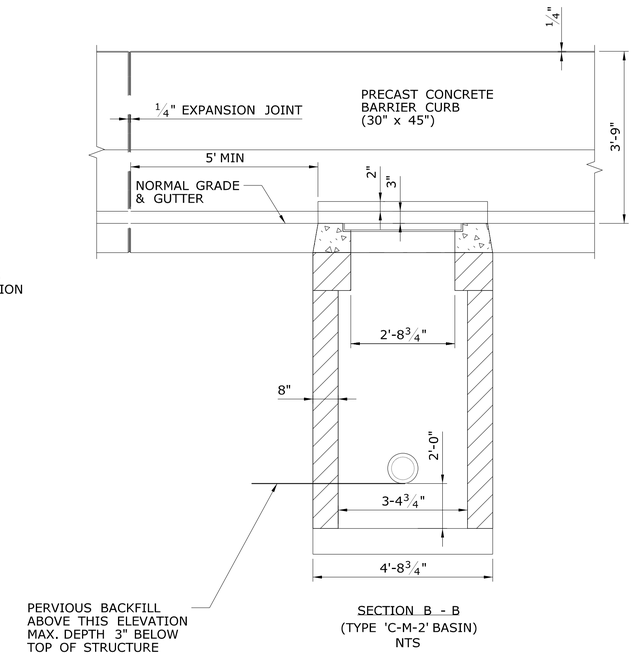

SECTION B - B
(TYPE 'C-M-2' BASIN)
NTS

NOTES:

1.) FOR OTHER PERTINENT DETAILS AND DIMENSIONS NOT SHOWN SEE STANDARD SHEET NO's. HW-507_07, HW-502_08, AND HW-0821_02A.

2.) IF CONCRETE BARRIER CURB IS TO BE CAST IN PLACE, IT SHALL BE PAID FOR AT THE CONTRACT UNIT PRICE PER LINEAR FOOT FOR "F SHAPE BARRIER CURB (30"x45")". WHICH PRICE SHALL INCLUDE ALL MATERIALS, EQUIPMENT, TOOLS, LABOR AND WORK INCIDENTAL THERETO.

3.) FOR CATCH BASINS UP TO 10' DEEP USE 8" REINFORCED CONCRETE SLAB BASE, #6 SHORT BARS AT 12" ON CENTER AND #5 LONG BARS AT 12" ON CENTER (MIN. 3" COVER). FOR CATCH BASINS OVER 10' DEEP USE 12" REINFORCED CONCRETE SLAB BASE, #6 SHORT BAR AT 12" ON CENTER AND #5 LONG BARS AT 12" ON CENTER (MIN. 3" COVER).

4.) FOR CATCH BASINS UP TO 10' DEEP USE 8" CLASS "A" CONCRETE WALLS, REINFORCED WITH #4 BARS AT 9" HORIZONTAL AND #4 BARS AT 12" VERTICAL (ONE LAYER AT C.L. OF WALL) (REINFORCEMENT TO BE CONTINUOUS AROUND CORNERS), OR 12" CONCRETE MASONRY UNITS. FOR CATCH BASINS OVER 10' DEEP USE 12" CLASS "A" CONCRETE WALLS, REINFORCED WITH #5 BARS AT 12" ON CENTER E.F. HORIZONTAL AND #4 BARS AT 12" ON CENTER E.F. VERTICAL (REINFORCEMENT TO HAVE 2" COVER AND TO BE CONTINUOUS AROUND CORNERS).

5.) ALL GRATES SHALL BE TYPE B. FOR DETAILS OF FRAME & GRATE SEE STANDARD DETAIL SHEET HW-507_08.

6.) THE COST OF MORTAR FILL AND JOINT SEAL SHALL BE INCLUDED IN THE CONTRACT UNIT PRICE FOR EACH TYPE 'C-M-2' CATCH BASIN.

7.) THE COST OF CASTING THROAT SHALL BE INCLUDED IN CONTRACT UNIT PRICE PER L.F. FOR "F SHAPE BARRIER CURB (30" x 45")".

8.) FOR DETAILS AND DIMENSIONS OF CONCRETE BARRIER CURB INCLUDING REINFORCING STEEL NOT SHOWN, SEE STANDARD SHEET NO. HW-0821_02A.

9.) THE COST OF PERMANENT CATCH BASIN TOPS AND THEIR INITIAL INSTALLATION SHALL BE INCLUDED IN THE CONTRACT UNIT PRICE FOR EACH TYPE 'C-M-2' CATCH BASIN.

10.) THE COST OF THE PERVIOUS BACKFILL SHALL BE INCLUDED IN THE CONTRACT UNIT PRICE FOR EACH TYPE 'C-M-2' CATCH BASIN.

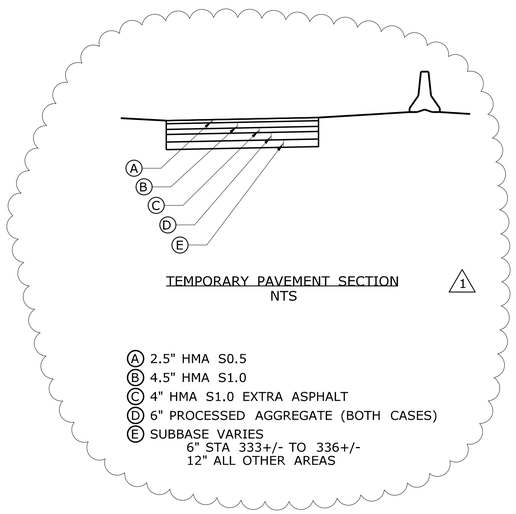

TEMPORARY PAVEMENT SECTION
NTS

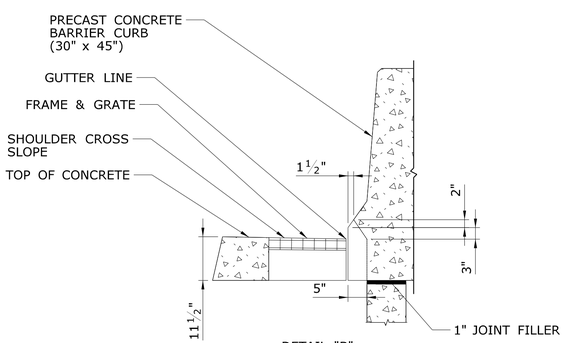

DETAIL "B"
NTS

NOTE:
PROCESSED AGGREGATE TO BE PLACED UNDER RAILING IN ALL LOCATIONS EXCEPT FOR WHERE "PAVEMENT FOR RAILING" HAS BEEN CALLED OUT ON THE PLANS.

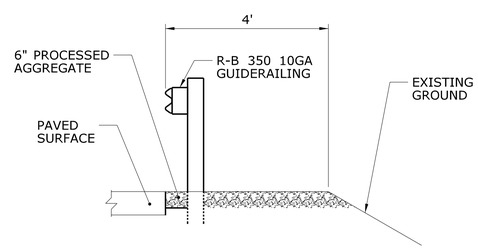

PROCESSED AGGREGATE BELOW GUIDERAIL INSTALLATION
NTS

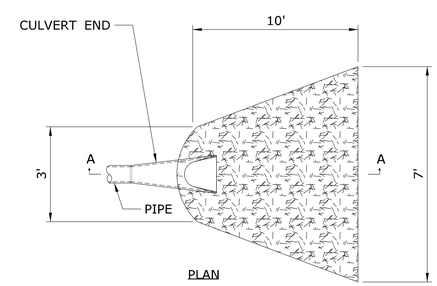

PLAN

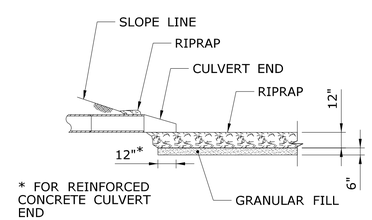

SECTION A-A

TYPE B MODIFIED RIPRAP APRON
NTS

ADDENDUM NO. 2

REV.	DATE	REVISION DESCRIPTION	SHEET NO.
-	-	-	-
-	-	-	-
-	-	-	-
-	-	-	-
-	-	-	-
1	4/13	ADDENDUM NO. 2	-

THE INFORMATION, INCLUDING ESTIMATED QUANTITIES OF WORK, SHOWN ON THESE SHEETS IS BASED ON LIMITED INVESTIGATIONS BY THE STATE AND IS IN NO WAY WARRANTED TO INDICATE THE CONDITIONS OF ACTUAL QUANTITIES OF WORK WHICH WILL BE REQUIRED.

Plotted: 4/16/2013

DESIGNER/DRAFTER: T. LOPATA
CHECKED BY: A. NAFIS

NOT TO SCALE

STATE OF CONNECTICUT
DEPARTMENT OF TRANSPORTATION

Filename: ...\HW_MST_0063_0601_03_16_MISC DETAILS.dgn

SIGNATURE/BLOCK:
Weston&Sampson
273 Dividend Road, Rocky Hill, CT 06067
(860) 513-1473 (800) SAMPSON
www.westonandsampson.com

STATE OF CONNECTICUT ALAN C. NAFIS No. 12856 LICENSED PROFESSIONAL ENGINEER

PROJECT TITLE:
RECONSTRUCTION OF THE FLATBUSH AVENUE CONNECTOR (STATE ROAD 504)

TOWN: **HARTFORD**

DRAWING TITLE: **MISCELLANEOUS DETAILS**

PROJECT NO. **63-601**
DRAWING NO. **HWY-16**
SHEET NO. **01.03.16.A2**

Border Version: 10/19/07