STATE PROJECT NO. 63-601

RECONSTRUCTION OF THE FLATBUSH AVENUE CONNECTOR (STATE ROAD 504)

UTILITIES SUBSET 08

LIST OF DRAWINGS IN UTILITIES SUBSET 08

DRAWING NO.	TITLE
UT-00	LIST OF DRAWINGS
UT-01	SEWER RELOCATION PLAN AND PROFILE
UT-02	SEWER RELOCATION SECTIONS AND DETAILS 1
UT-03	SEWER RELOCATION SECTIONS AND DETAILS 2
UT-04	SANITARY SEWER BYPASS PLAN

DESIGNED BY:
CONSULTANT COMPANY NAME

Weston&Sampson®
273 Dividend Road, Rocky Hill, CT 06067
(860) 513-1473 (800) SAMPSON
www.westonandsampson.com

STATE OF CONNECTICUT ALAN L. NAFIS No. 12656 LICENSED PROFESSIONAL ENGINEER

Alan L. Nafis
2013.04.17
15:43:50
-04'00'

NEW SHEET ADDED BY ADDENDUM NO. 2

REV.	DATE	REVISION DESCRIPTION	SHEET NO.
-	-	-	-
-	-	-	-
-	-	-	-
-	-	-	-
-	-	-	-
-	-	-	-

THE INFORMATION, INCLUDING ESTIMATED QUANTITIES OF WORK, SHOWN ON THESE SHEETS IS BASED ON LIMITED INVESTIGATIONS BY THE STATE AND IS IN NO WAY WARRANTED TO INDICATE THE CONDITIONS OF ACTUAL QUANTITIES OF WORK WHICH WILL BE REQUIRED.

Plotted Date: 01/24/11

DESIGNER/DRAFTER: S. WEIER
CHECKED BY: A. NAFIS

STATE OF CONNECTICUT
DEPARTMENT OF TRANSPORTATION

Filename: R:\ConnDOT\MicroStation Projects\#155-#164 Oakwood\Highways\HW_MST_0155_0164_MPT_Oakwood_1.dgn

SIGNATURE/BLOCK:
Weston&Sampson®
273 Dividend Road, Rocky Hill, CT 06067
(860) 513-1473 (800) SAMPSON
www.westonandsampson.com

PROJECT TITLE:
RECONSTRUCTION OF THE FLATBUSH AVENUE CONNECTOR (STATE ROAD 504)

TOWN: **HARTFORD**

DRAWING TITLE: **LIST OF DRAWINGS**

PROJECT NO. **63-601**
DRAWING NO. **UT-00**
SHEET NO. **01.08.00.A2**

Border Version: 11/14/08

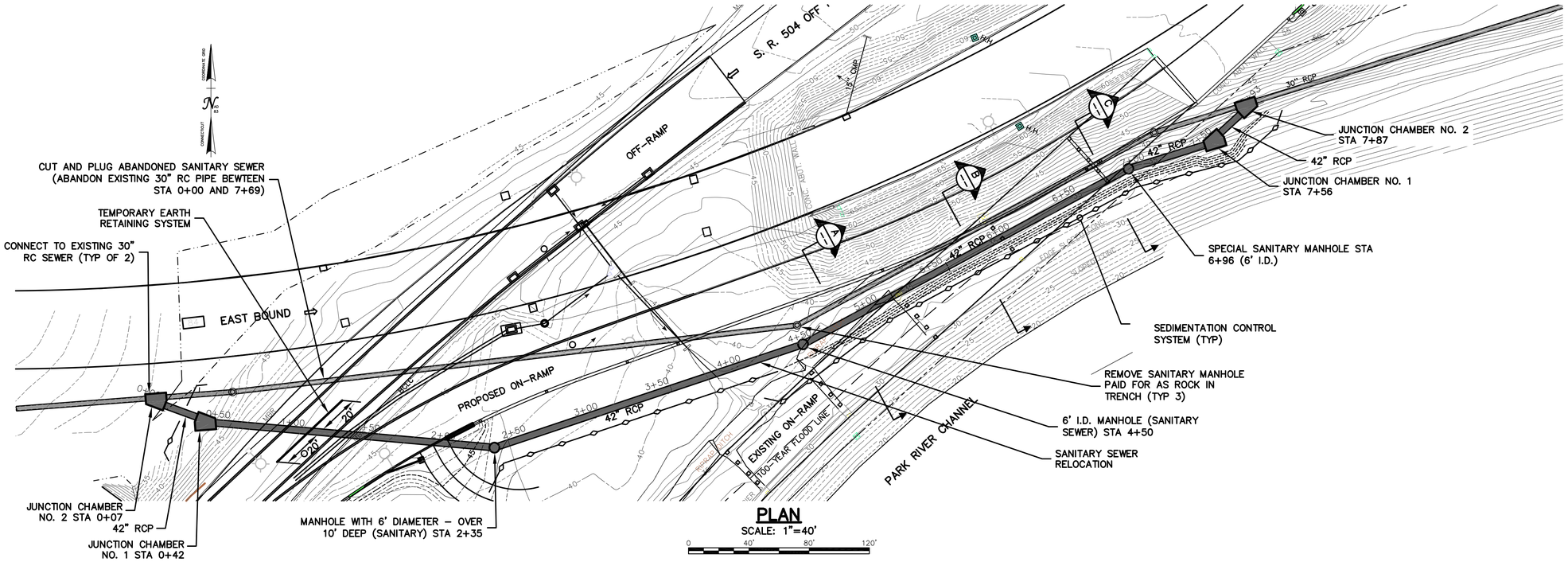

PLAN
SCALE: 1"=40'

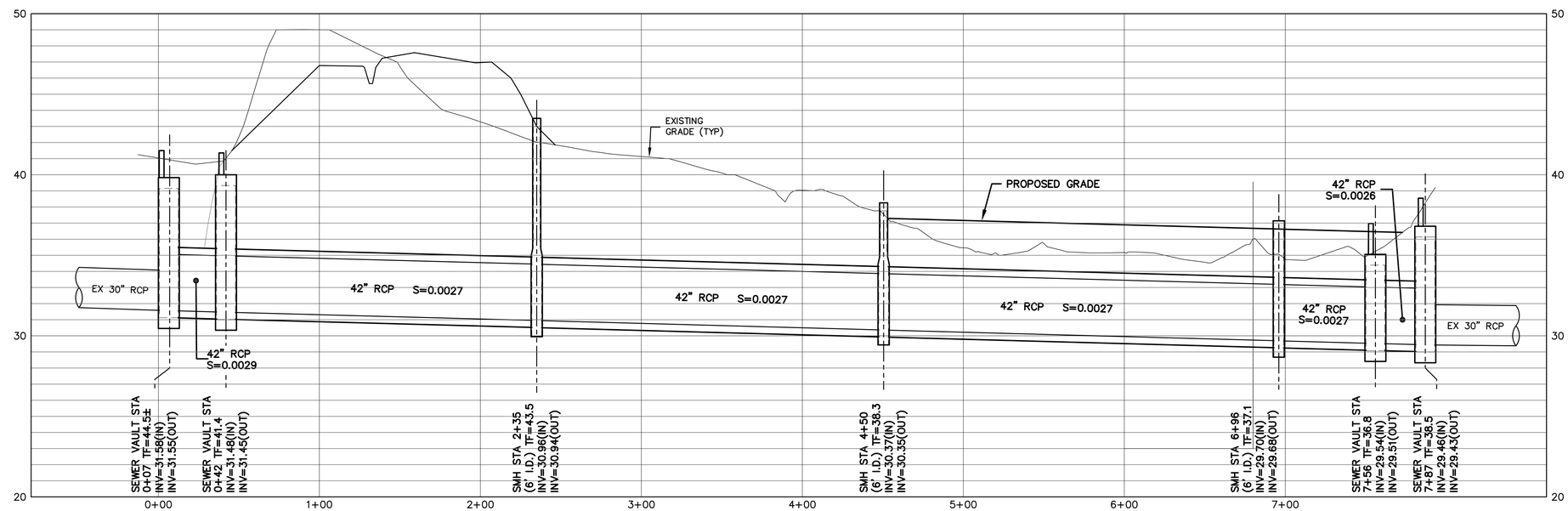

PROFILE
SCALE: 1"=40'H; 1"=4'V

NEW SHEET ADDED BY ADDENDUM NO. 2

REV.	DATE	REVISION DESCRIPTION	SHEET NO.

THE INFORMATION, INCLUDING ESTIMATED QUANTITIES OF WORK, SHOWN ON THESE SHEETS IS BASED ON LIMITED INVESTIGATIONS BY THE STATE AND IS IN NO WAY WARRANTED TO INDICATE THE CONDITIONS OF ACTUAL QUANTITIES OF WORK WHICH WILL BE REQUIRED.

Plotted Date:

DESIGNER/DRAFTER: J.S.P.
CHECKED BY: A.L.N.

STATE OF CONNECTICUT
DEPARTMENT OF TRANSPORTATION

Filename:

SIGNATURE/ BLOCK:
Weston & Sampson
273 Dividend Road, Rocky Hill, CT 06067
(860) 513-1473 (800) SAMPSON
www.westonandsampson.com

STATE OF CONNECTICUT ALAN L. NAPP No. 12656 LICENSED PROFESSIONAL ENGINEER

PROJECT TITLE:
RECONSTRUCTION OF THE FLATBUSH AVENUE CONNECTOR (STATE ROAD 504)

TOWN: **HARTFORD**

DRAWING TITLE: **SEWER RELOCATION PLAN AND PROFILE**

PROJECT NO. 063-601
DRAWING NO. UT-01
SHEET NO. **01.08.01.A2**

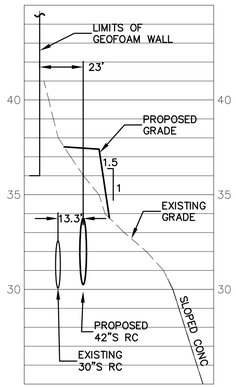

SECTION AT PROPOSED STA 4+80 (A)
SCALE: 1"=40' HORZ; 1"=4' VERT

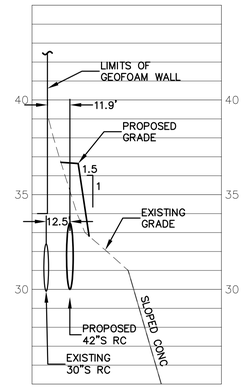

SECTION AT PROPOSED STA 5+80 (B)
SCALE: 1"=40' HORZ; 1"=4' VERT

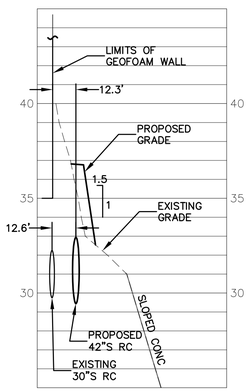

SECTION AT PROPOSED STA 6+80 (C)
SCALE: 1"=40' HORZ; 1"=4' VERT

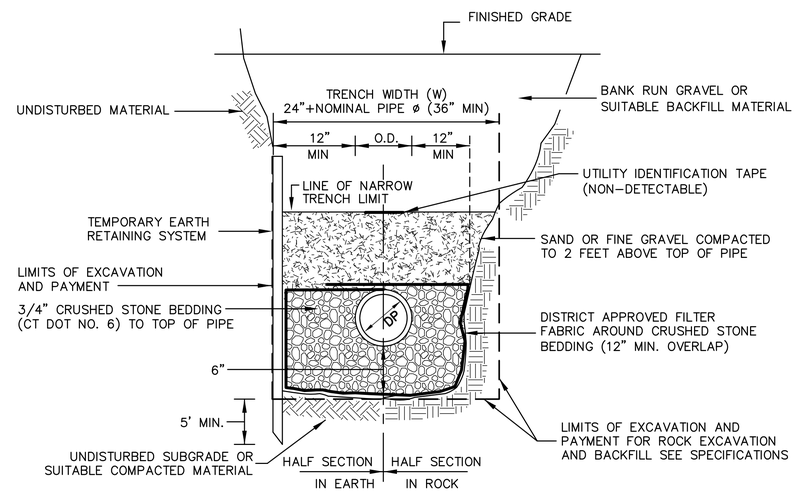

SANITARY SEWER TRENCH DETAIL
N.T.S.

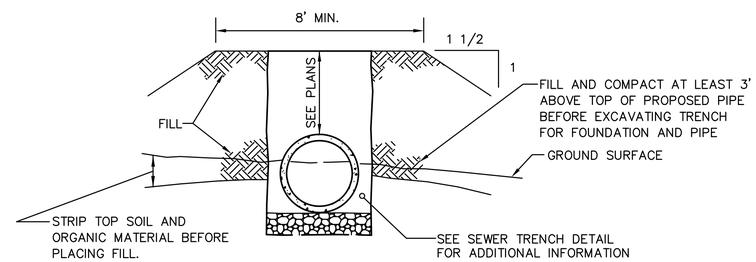

TYPICAL CONSTRUCTION IN LOW LANDS
N.T.S.

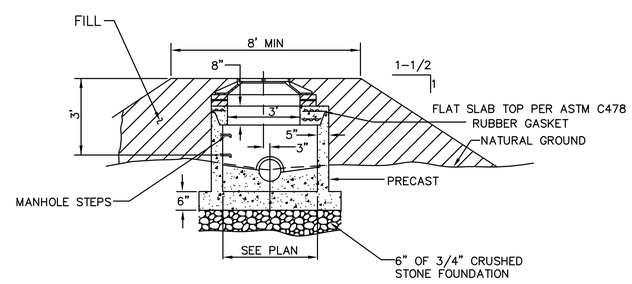

NOTES:
1. WATERTIGHT FRAME AND COVER
2. WATER TABLE TO BE CONCRETE OR BRICK MASONRY
3. TOP FRAME MUST BE SET ON NOT LESS THAN 6" OF BRICKWORK.

SPECIAL SANITARY MANHOLE
N.T.S.

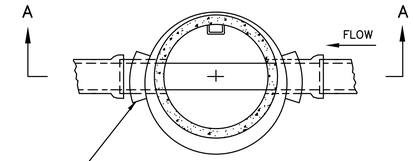

SECTION C–C

CONNECTION OF PIPES TO MANHOLE WALL TO BE MADE WITH BRICK OR CONCRETE MASONRY OR AN ELASTOMERIC TYPE OF SEAL APPROVED BY THE ENGINEER.

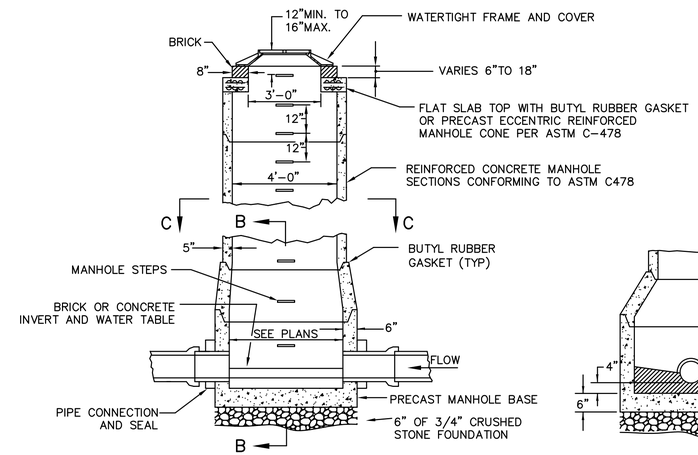

SECTION A–A

SECTION B–B

6' I.D. MANHOLE
N.T.S.

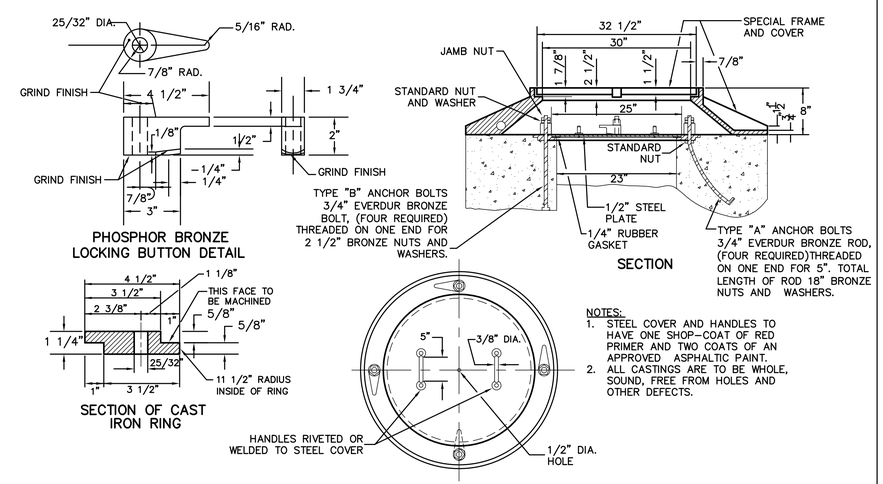

NOTES:
1. STEEL COVER AND HANDLES TO HAVE ONE SHOP-COAT OF RED PRIMER AND TWO COATS OF AN APPROVED ASPHALTIC PAINT.
2. ALL CASTINGS ARE TO BE WHOLE, SOUND, FREE FROM HOLES AND OTHER DEFECTS.

STANDARD WATERTIGHT MANHOLE FRAME AND COVER
N.T.S.

NEW SHEET ADDED BY ADDENDUM NO. 2

REV.	DATE	REVISION DESCRIPTION	SHEET NO.

THE INFORMATION, INCLUDING ESTIMATED QUANTITIES OF WORK, SHOWN ON THESE SHEETS IS BASED ON LIMITED INVESTIGATIONS BY THE STATE AND IS IN NO WAY WARRANTED TO INDICATE THE CONDITIONS OF ACTUAL QUANTITIES OF WORK WHICH WILL BE REQUIRED.

Plotted Date:

DESIGNER/DRAFTER: J.S.P.
CHECKED BY: A.L.N.

STATE OF CONNECTICUT
DEPARTMENT OF TRANSPORTATION

Filename:

SIGNATURE/BLOCK:
Weston&Sampson
273 Dividend Road, Rocky Hill, CT 06067
(860) 513-1473 (800) SAMPSON
www.westonandsampson.com

STATE OF CONNECTICUT ALAN L. NASH No. 12656 LICENSED PROFESSIONAL ENGINEER

PROJECT TITLE:
RECONSTRUCTION OF THE FLATBUSH AVENUE CONNECTOR (STATE ROAD 504)

TOWN: **HARTFORD**

DRAWING TITLE: **SEWER RELOCATION SECTIONS AND DETAILS 1**

PROJECT NO. 063-601
DRAWING NO. UT-02
SHEET NO. 01.08.02.A2

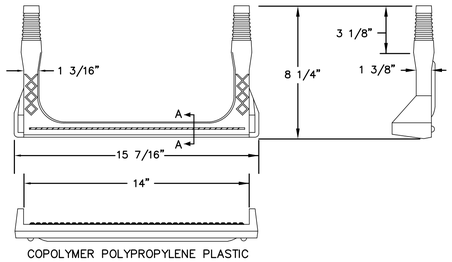

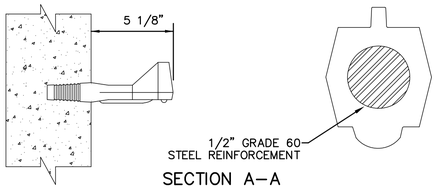

SECTION A–A

NOTES:
1. MANHOLE STEPS SHALL BE INSTALLED PER MANUFACTURER'S SPECIFICATIONS

PLASTIC MANHOLE STEP

N.T.S.

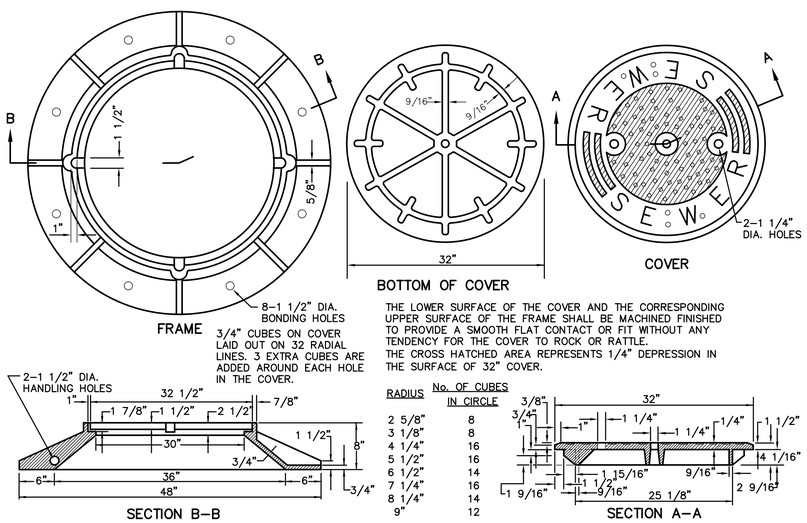

3/4" CUBES ON COVER LAID OUT ON 32 RADIAL LINES. 3 EXTRA CUBES ARE ADDED AROUND EACH HOLE IN THE COVER.

THE LOWER SURFACE OF THE COVER AND THE CORRESPONDING UPPER SURFACE OF THE FRAME SHALL BE MACHINED FINISHED TO PROVIDE A SMOOTH FLAT CONTACT OR FIT WITHOUT ANY TENDENCY FOR THE COVER TO ROCK OR RATTLE.
THE CROSS HATCHED AREA REPRESENTS 1/4" DEPRESSION IN THE SURFACE OF 32" COVER.

RADIUS	No. OF CUBES IN CIRCLE
2 5/8"	8
3 1/8"	8
4 1/4"	16
5 1/2"	16
6 1/2"	14
7 1/4"	16
8 1/4"	14
9"	12

SPECIAL FRAME AND COVER

N.T.S.

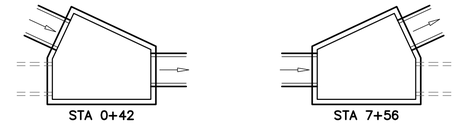

VAULT ORIENTATION

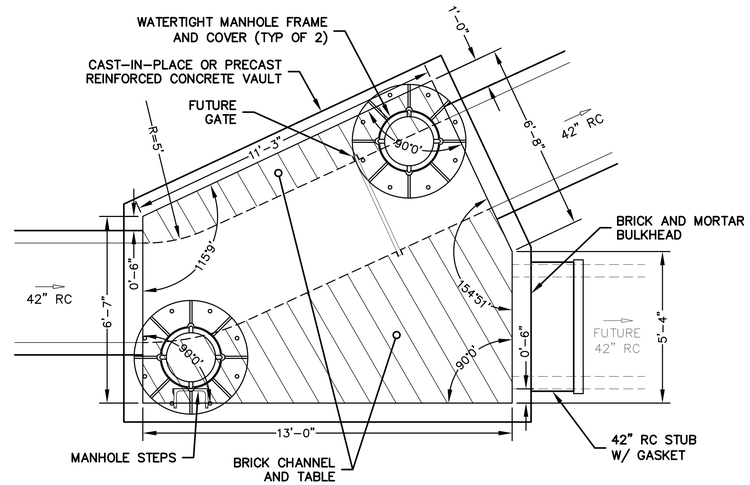

NOTES:
1. CONTRACTOR TO PROVIDE VAULT DESIGN PLANS. VAULT DESIGN PLANS SHALL BE STAMPED BY A PROFESSIONAL STRUCTURAL ENGINEER LICENSED IN THE STATE OF CONNECTICUT.
2. CONTRACTOR SHALL SUBMIT SIZING OF THE ANTI–FLOATATION FOOTING. ALL CALCULATIONS SHALL BE STAMPED BY A PROFESSIONAL STRUCTURAL ENGINEER LICENSED IN THE STATE OF CONNECTICUT.

JUNCTION CHAMBER NO. 1
STA 0+42 AND STA 7+56

SCALE: 3/8"=1'–0"

VAULT ORIENTATION

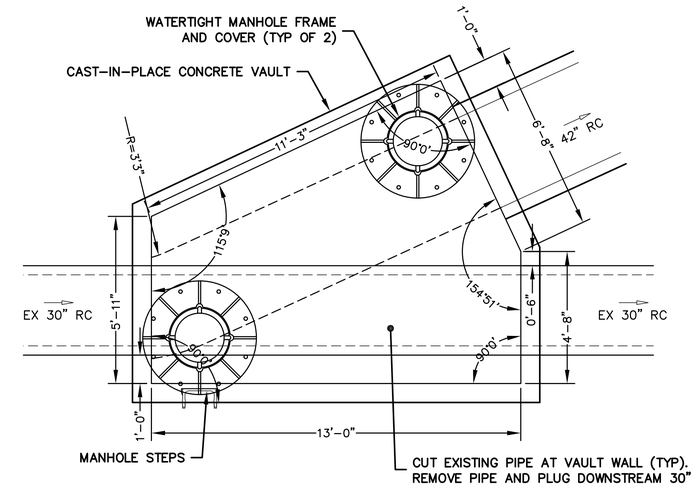

NOTES:
1. CONTRACTOR TO PROVIDE VAULT DESIGN PLANS. VAULT DESIGN PLANS SHALL BE STAMPED BY A PROFESSIONAL STRUCTURAL ENGINEER LICENSED IN THE STATE OF CONNECTICUT.
2. CONTRACTOR SHALL SUBMIT SIZING OF THE ANTI–FLOATATION FOOTING. ALL CALCULATIONS SHALL BE STAMPED BY A PROFESSIONAL STRUCTURAL ENGINEER LICENSED IN THE STATE OF CONNECTICUT.
3. BRICK INVERT AND BENCH SHALL BE CREATED (NOT SHOWN FOR CLARITY).

JUNCTION CHAMBER NO. 2
STA 0+07 AND STA 7+87

SCALE: 3/8"=1'–0"

NEW SHEET ADDED BY ADDENDUM NO. 2

REV.	DATE	REVISION DESCRIPTION	SHEET NO.

THE INFORMATION, INCLUDING ESTIMATED QUANTITIES OF WORK, SHOWN ON THESE SHEETS IS BASED ON LIMITED INVESTIGATIONS BY THE STATE AND IS IN NO WAY WARRANTED TO INDICATE THE CONDITIONS OF ACTUAL QUANTITIES OF WORK WHICH WILL BE REQUIRED.

Plotted Date:

DESIGNER/DRAFTER: J.S.P.
CHECKED BY: A.L.N.

STATE OF CONNECTICUT
DEPARTMENT OF TRANSPORTATION

Filename: _____

SIGNATURE/BLOCK:
Weston&Sampson
273 Dividend Road, Rocky Hill, CT 06067
(860) 513-1473 (800) SAMPSON
www.westonandsampson.com

STATE OF CONNECTICUT ALAN L. NASH No. 12856 LICENSED PROFESSIONAL ENGINEER

PROJECT TITLE:
RECONSTRUCTION OF THE FLATBUSH AVENUE CONNECTOR (STATE ROAD 504)

TOWN: **HARTFORD**

DRAWING TITLE: **SEWER RELOCATION SECTIONS AND DETAILS 2**

PROJECT NO. 063-601
DRAWING NO. UT-03
SHEET NO. 01.08.03.A2

PLAN

SCALE: 1"=50'

0 50' 100' 150'

SUGGESTED SEQUENCE OF CONSTRUCTION
STAGES ARE ROADWAY STAGES OF CONSTRUCTION
REFER TO SANITARY RELOCATION PLAN AND PROFILE FOR BASELINE STATIONING

STAGE 1 & 2
PRE-LOAD AREA AND CONSTRUCT OFF RAMP
BEGIN INSTALLATION OF EXPANDED POLYSTYRENE (EPS) FILL
PORTIONS OF THE EXISTING SEWER WILL BE UNDER THE EPS FILL, BUT NO MANHOLES WILL BE COVERED.
THE NEW SEWER CAN BE CONSTRUCTED FROM STATION 2+20 TO 4+36
THE NEW VAULTS CAN BE CONSTRUCTED
INSTALL TEMPORARY EARTH RETAINING SYSTEM
CONSTRUCT SEWER UNDER EXISTING ON RAMP
THE VAULTS AT STATIONS 0+07 AND 7+69 WILL BE CONSTRUCTED AROUND THE EXISTING PIPE WHICH WILL BE LEFT IN OPERATION.

STAGE 3
FOLLOWING PRE-LOAD PERIOD AND DURING THE CONSTRUCTION AND SHIFTING OF THE OFF RAMP,
CONSTRUCT THE NEW SEWER FROM STATION 0+38 TO 2+20.
CONSTRUCT CASING PIPES FOR THE TEMPORARY PUMPING OPERATION.
THE NEW ON RAMP IS UNDER CONSTRUCTION

STAGE 4
TRAFFIC IS ON THE NEW ON RAMP
DEMOLISH THE REMAINDER OF THE EXISTING STRUCTURE
CONSTRUCT SEWER FROM STATION 4+36 TO 7+43
CONSTRUCT DOG HOUSE MANHOLES, ONE FOR PUMPING AND ONE FOR BLOCKING THE FLOW
SET UP PUMPS AND PIPE SYSTEM AS SHOWN ON PLAN
BY-PASS PUMP FROM EX MH AND DOG HOUSE MANHOLE TO SIPHON CHAMBER
REMOVE 30" PIPE INSIDE VAULTS AT STATIONS 0+07 AND 7+69, CONSTRUCT INVERTS AND BLOCK EXISTING 30" PIPE
REMOVE PUMPS AND ALLOW FLOW THROUGH NEW 42" PIPE.
REMOVE TEMPORARY DISCAHRGE LINES, FILL AND PLUG CASING PIPES

GENERAL NOTES:

1. THE CONTRACTOR SHALL INVESTIGATE AND VERIFY FLOWS USING APPROPRIATE FLOW METERS TO EVALUATE THE SCOPE OF FACILITIES REQUIRED FOR PROPER CONVEYANCE AND MAINTENANCE OF THE COMBINED SEWER SYSTEM.

2. ANY TIME THE BY-PASS PUMPING SYSTEM IS OPERATING, AN EXPERIENCED OPERATOR SHALL BE ON SITE TO MONITOR THE OPERATION.

3. HIGH FLOW CONDITIONS MAY REQUIRE THE CONTRACTOR TO TEMPORARILY SUSPEND THE BY-PASS PUMPING OPERATION. IN THE SITUATION WHERE A RAIN EVENT IS FORECAST, THE COMBINED SEWER SYSTEM SHALL BE RETURNED TO NORMAL FLOW OPERATION UNTIL SUCH TIME AS THE INCREASED FLOWS HAVE RETURNED TO NORMAL AND THE CHANCE OF THE RAIN EVENT HAS PASSED.

NEW SHEET ADDED BY ADDENDUM NO. 2

REV.	DATE	REVISION DESCRIPTION	SHEET NO.

THE INFORMATION, INCLUDING ESTIMATED QUANTITIES OF WORK, SHOWN ON THESE SHEETS IS BASED ON LIMITED INVESTIGATIONS BY THE STATE AND IS IN NO WAY WARRANTED TO INDICATE THE CONDITIONS OF ACTUAL QUANTITIES OF WORK WHICH WILL BE REQUIRED.

Plotted Date:

DESIGNER/DRAFTER: J.S.P.
CHECKED BY: A.L.N.

STATE OF CONNECTICUT
DEPARTMENT OF TRANSPORTATION

Filename: _____

SIGNATURE/BLOCK:
Weston&Sampson
273 Dividend Road, Rocky Hill, CT 06067
(860) 513-1473 (800) SAMPSON
www.westonandsampson.com

STATE OF CONNECTICUT ALAN L. NEFF No. 12656 PROFESSIONAL ENGINEER

PROJECT TITLE:
RECONSTRUCTION OF THE FLATBUSH AVENUE CONNECTOR (STATE ROAD 504)

TOWN: **HARTFORD**

DRAWING TITLE: **SANITARY SEWER BYPASS PLAN**

PROJECT NO. 063-601
DRAWING NO. UT-04
SHEET NO. **01.08.04.A2**