STATE OF CONNECTICUT

DEPARTMENT OF CONSTRUCTION SERVICES
DONALD DeFRONZO
ACTING COMMISSIONER

WESTERN CONNECTICUT STATE UNIVERSITY
JAMES SCHMOTTER
PRESIDENT

DANNEL P. MALLOY GOVERNOR

WESTERN CONNECTICUT STATE UNIVERSITY

LEARNING EMPORIUM WORK TABLES
at
FIRST FLOOR HIGGINS HALL ANNEX

INDEX OF DRAWINGS

C-1 Cover Sheet
A-1 Furniture Layout Floor Plan,
F-1 6 Person Work Table Plans, Elevation and Detail
F-2 4 Person Work Table Plans, Elevation and Detail

WESTERN CONNECTICUT STATE UNIVERSITY

WCSU
Planning and Engineering
181 White Street
Danbury, CT 06810
www.wcsu.edu

Learning Emporium Work Tables
First Floor Higgins Hall Annex

Cover Sheet

Project No. BI-RD281
By:DMF
Scale: AS NOTED
Issue Date: 4/23/13

C-1

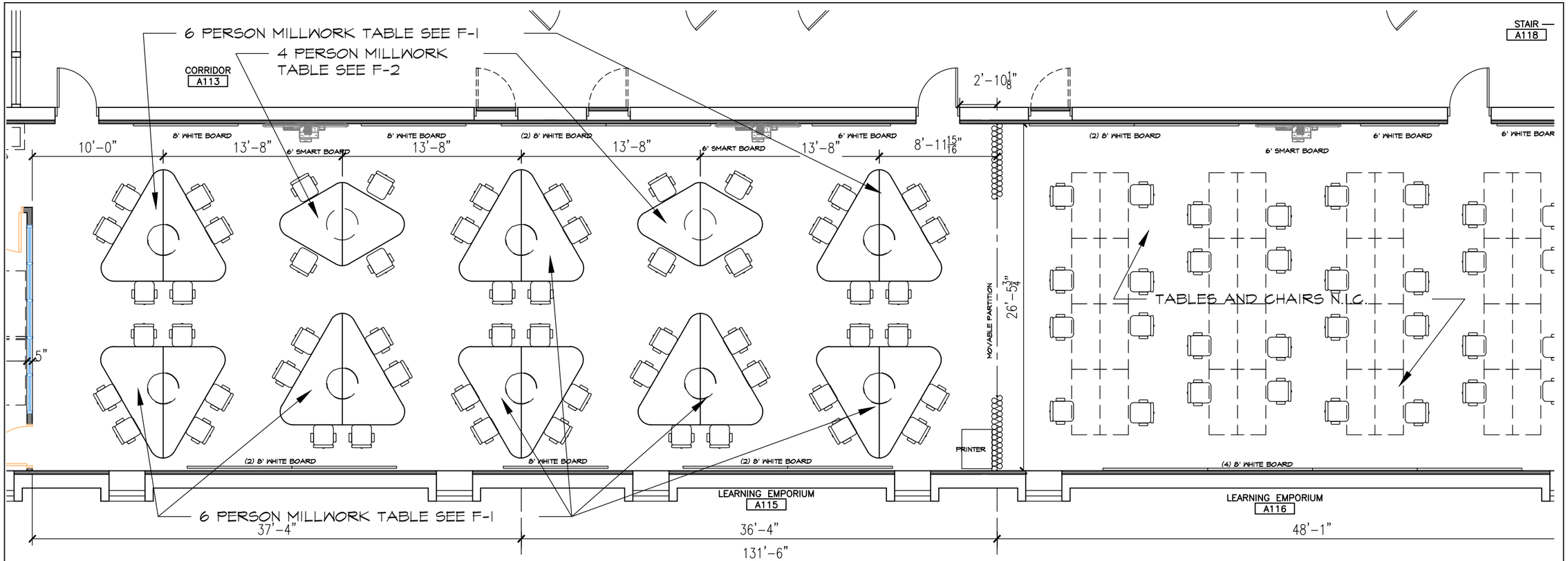

1 FURNITURE LAYOUT FLOOR PLAN

SCALE 1/8"=1'-0"

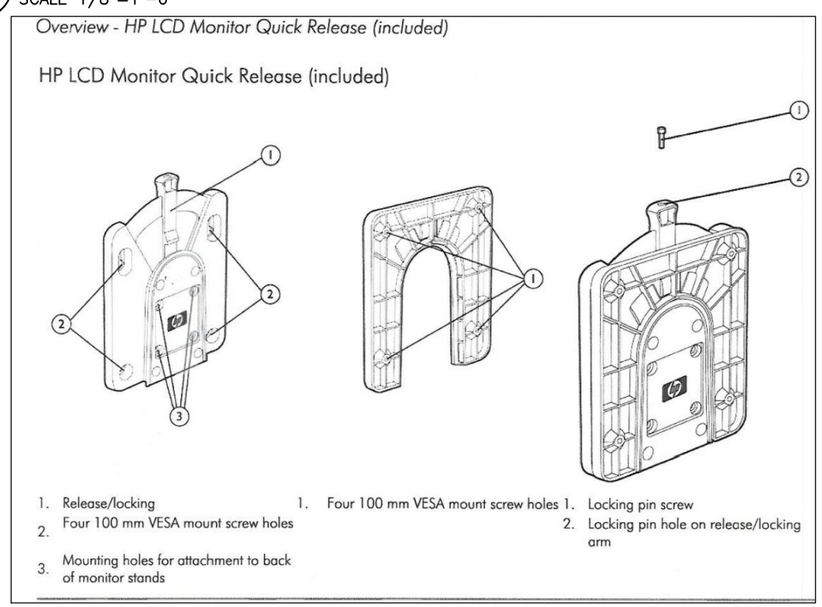

CPU TABLE MOUNT

NTS

NOTE

1. PROVIDE 90 LINEAR FEET OF WIRE MOLD TO BE INSTALLED BY THIS CONTRACT ON N.I.C. TABLES ABOVE.
2. ELECTICAL AND DATA OUTLETS BY OTHERS. TABLE BASE ROUGH-IN OF OUTLETS BY THIS CONTRACT.
3. UNDERCOUNTER KEYBOARD TRAY BY OTHERS (INSTALLED IN THIS CONTRACT)

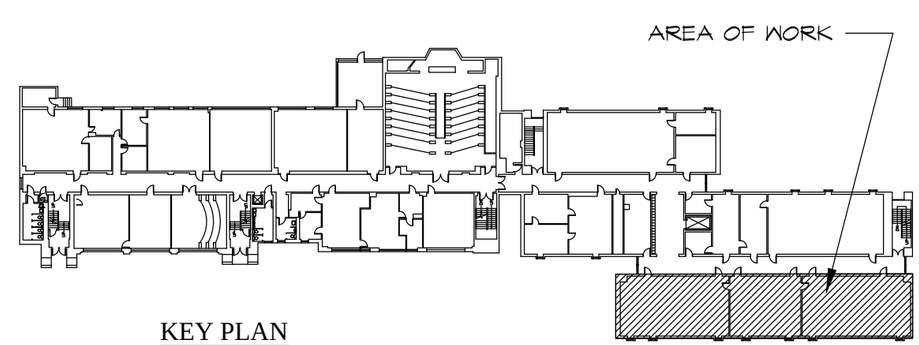

KEY PLAN

WESTERN CONNECTICUT STATE UNIVERSITY

WCSU
Planning and Engineering
181 White Street
Danbury, CT 06810
www.wcsu.edu

Learning Emporium Work Tables

First Floor Higgins Hall Annex

Furniture Layout Floor Plan

Project No. BI-RD281

By:DMF

Scale: AS NOTED

Issue Date: 4/23/13

A-1

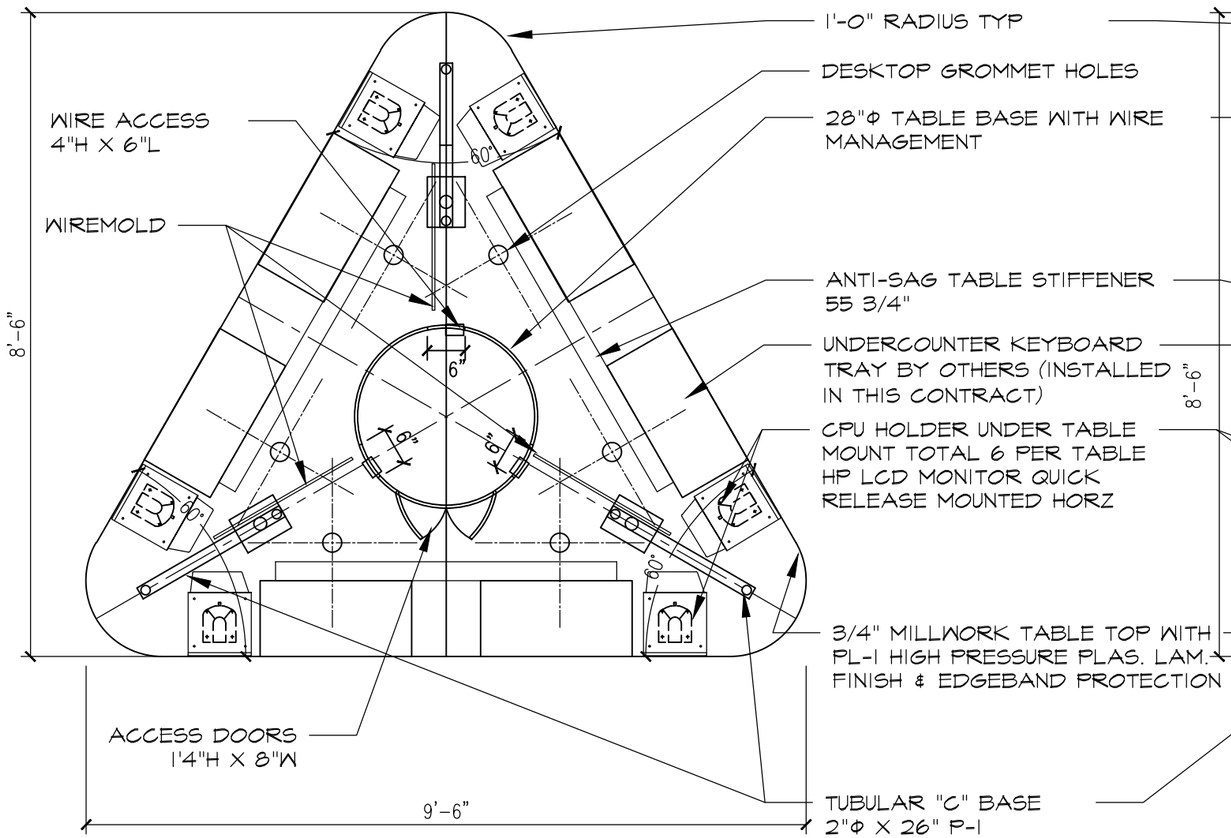

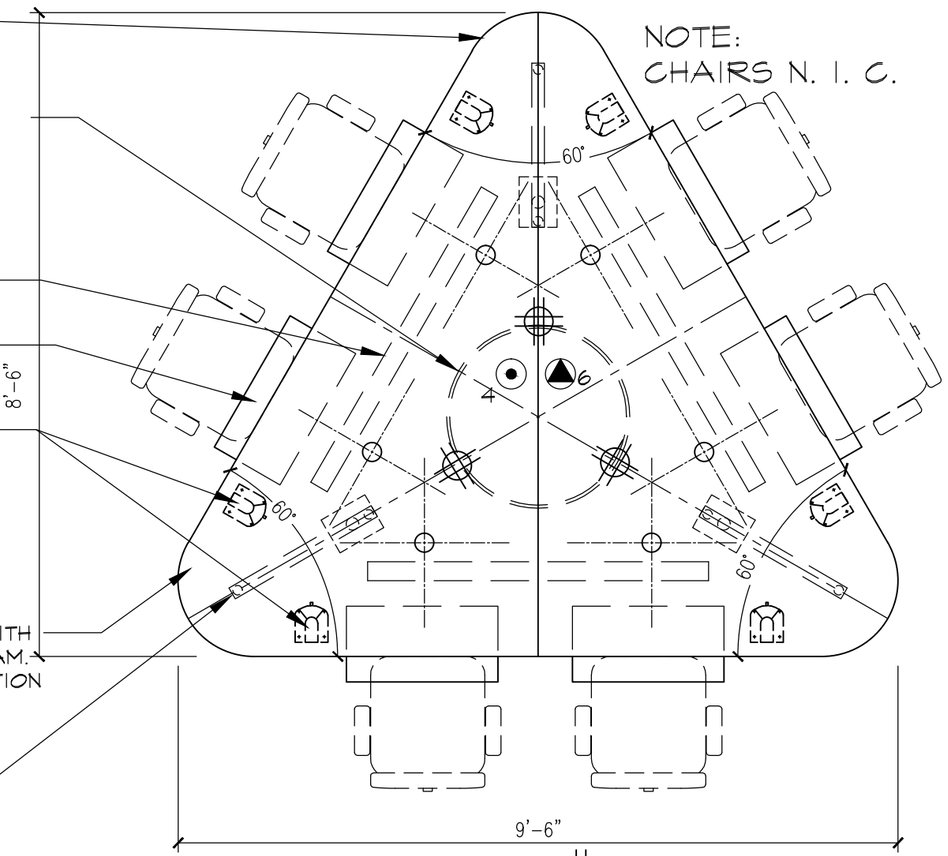

FINISHES
PL-1 HIGH PRESSURE PLASTIC LAMINATE "WILSONART" 7122K-07 TABLE TOP AND BASE
P-1 PAINT MATT SILVER METALLIC METAL LEGS

8 TABLES

6 FLOOR DATA OUTLET BY OTHERS # OF OUTLETS

4 FLOOR ELEC. OUTLET BY OTHERS # OF OUTLETS

TABLE BASE. MOUNTED QUAD ELEC. OUTLET BY OTHERS ROUGH IN BY THIS CONTRACT

1 UNDERSIDE OF WORK TABLE
SCALE 1/2"=1'-0"

2 WORK TABLE PLAN
SCALE 1/2"=1'-0"

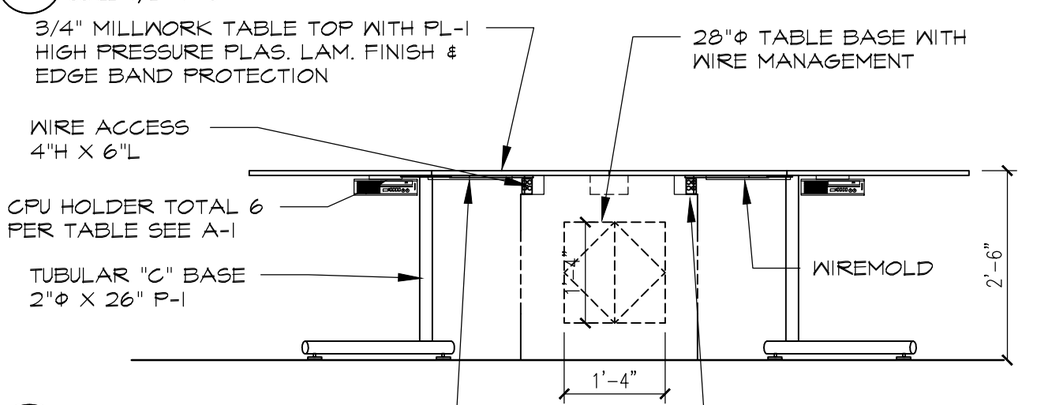

3 WORK TABLE ELEVATION
SCALE 1/2"=1'-0"

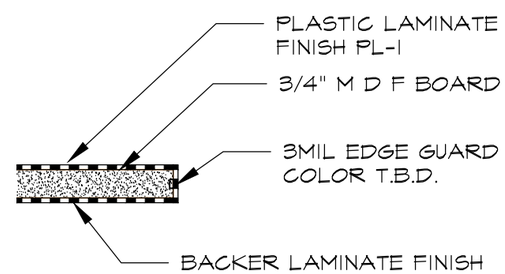

4 WORK TABLE TOP EDGE DETAIL
SCALE 3"=1'-0"

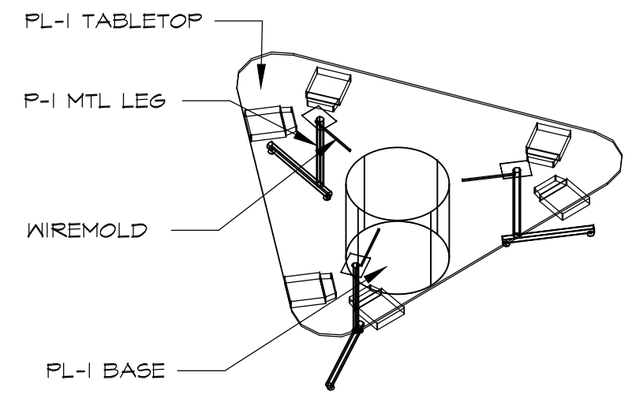

5 3D WORK TABLE TOPS
SCALE NONE

WESTERN CONNECTICUT STATE UNIVERSITY

WCSU
Planning and Engineering
181 White Street
Danbury, CT 06810
www.wcsu.edu

Learning Emporium Work Tables
First Floor Higgins Hall Annex

6 Person Work Table Plans, Elevation and Detail

Project No. BI-RD281

By:DMF

Scale: AS NOTED

Issue Date: 4/23/13

F-1

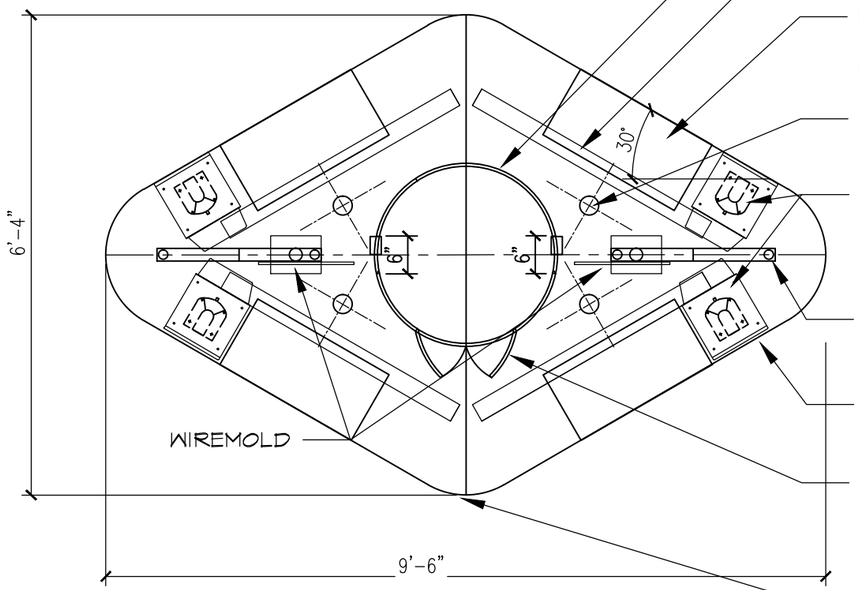

FINISHES
PL-1 HIGH PRESSURE PLASTIC LAMINATE "WILSONART" 7122K-07 TABLE TOP AND BASE
P-1 PAINT MATT SILVER METALLIC METAL LEGS

1 UNDERSIDE OF WORK TABLE
SCALE 1/2"=1'-0"

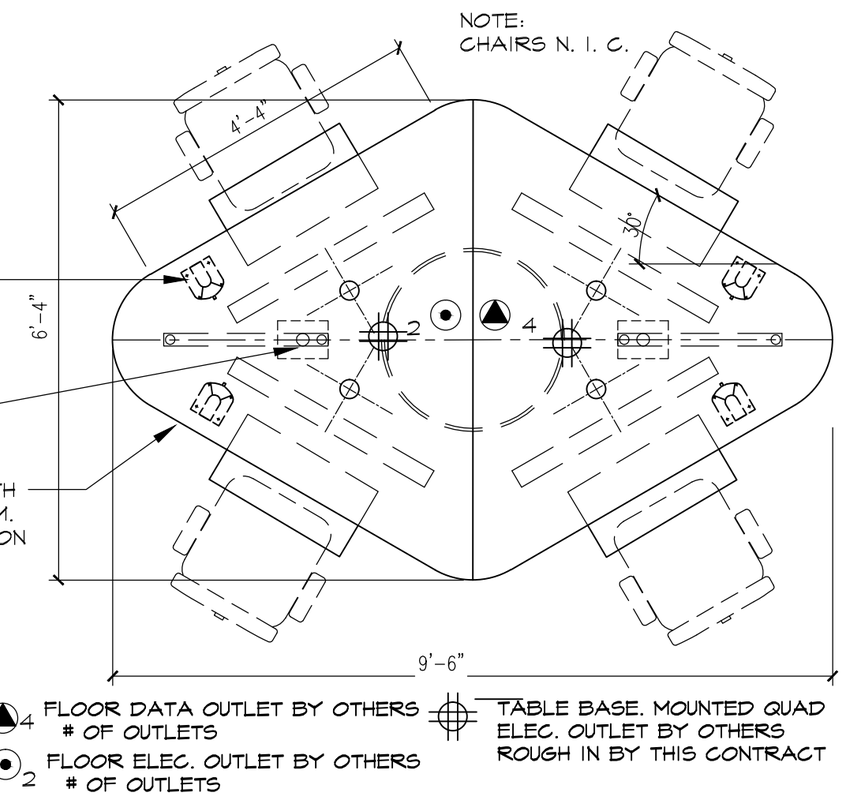

2 WORK TABLE PLAN
SCALE 1/2"=1'-0"

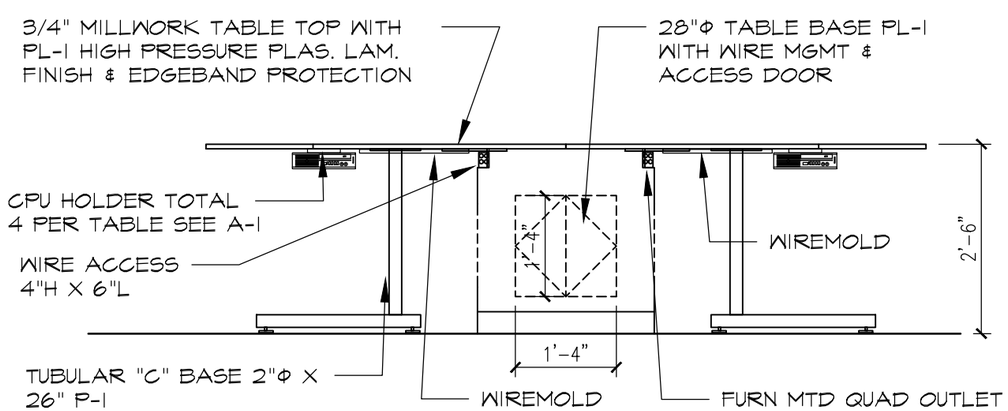

3 WORK TABLE ELEVATION
SCALE 1/2"=1'-0"

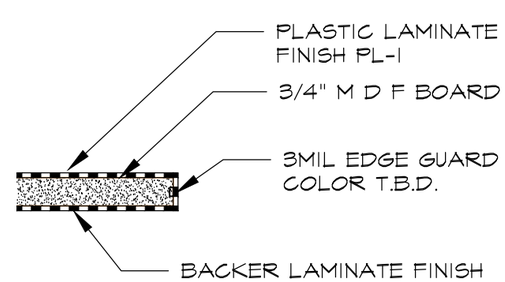

4 WORK TABLE TOP EDGE DETAIL
SCALE 3"=1'-0"

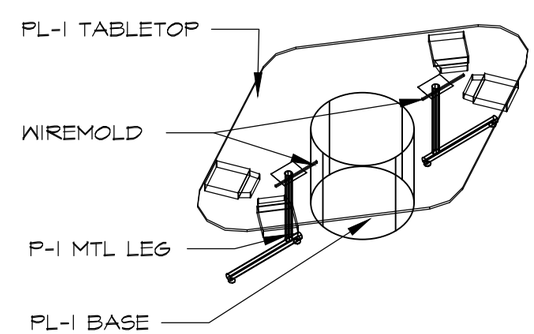

5 3D WORK TABLE TOPS
SCALE NONE

WESTERN CONNECTICUT STATE UNIVERSITY

WCSU
Planning and Engineering
181 White Street
Danbury, CT 06810
www.wcsu.edu

Learning Emporium Work Tables
First Floor Higgins Hall Annex

4 Person Work Table Plans, Elevation and Detail

Project No. BI-RD281
By:DMF
Scale: AS NOTED
Issue Date:4/23/13

F-2