Margaret Gilbert
Buyer

860-679-1988
Telephone Number

mgilbert@adp.uchc.edu
E-mail Address

860-284-5873
Fax Number

STATE OF CONNECTICUT

UNIVERSITY OF CONNECTICUT HEALTH CENTER
Procurement Operations & Contracts
263 Farmington Avenue, MC4036
Farmington, CT 06032-4036

ITB NUMBER:	BID DUE DATE:	BID DUE TIME:
UCHC4-39705749	July 3, 2013	2:30 pm EST

ITB TITLE: **Supply and Install Spencer Turbine Equipment UCHC Dental School**

NOTE: Please complete and return this acknowledgement as soon as possible to the Buyer's email address or fax number indicated above. This document is crucial for bid follow-up.

Please check one of the following boxes: ☐ Submitting a bid ☐ NOT submitting a bid

Print or type the following information:

Firm/Corporation Name:	
Street Address:	
City, State, Zip Code:	
Contact Name/Title:	
Phone Number:	
Fax Number:	
E-mail Address:	

Margaret Gilbert
Buyer

860-679-1988
Telephone Number

mgilbert@adp.uchc.edu
E-mail Address

860-284-5873
Fax Number

STATE OF CONNECTICUT

UNIVERSITY OF CONNECTICUT HEALTH CENTER
Procurement Operations & Contracts
263 Farmington Avenue, MC4036
Farmington, CT 06032-4036

ITB NUMBER:	BID DUE DATE:	BID DUE TIME:
UCHC4-39705749	July 3, 2013	2:30 pm EST

ITB TITLE: Supply and Install Spencer Turbine Equipment UCHC Dental School

IT IS SUGGESTED THAT YOU REVIEW AND CHECK OFF EACH ACTION ITEM AS YOU COMPLETE IT		CHECK
1.	Form UCHC ITB-01 (Acknowledgement: Receipt of ITB Documents) must be completed and returned at least 48 hours before the bid due date and time listed on page 1 of this form.	
2.	If required, the amount of bid surety has been checked and the surety has been included in the upper right hand corner of form UCHC ITB-04 (Bidder's Price Schedule).	
3.	Form UCHC ITB-04 (Scope of Work) must be included with your bid and contain the following:	
	a. Supplier's name must be in the upper right corner of all price schedule pages	
	b. The delivery information has been included with the bid. Be specific: In most cases, "as ordered" or "as required" is not complete information.	
	c. The bid prices you have offered have been reviewed and verified.	
	d. The price extensions and totals have been checked. In case of discrepancy between unit prices and total prices, the unit price will govern the bid evaluation.	
	e. Any errors, alterations, corrections or erasures to unit prices or total prices must be initialed by the person who signs the bid or his/her designee. Such changes made and not initialed shall mean automatic rejection of that portion of the bid.	
	f. The payment terms are **Net 45 Days**. You may offer cash discounts for prompt payment. Cash discounts for net terms less than 45 days may be considered when evaluating bid pricing. *Exception:* State of CT Small Business Set-Aside bid payment terms shall be in accordance with Connecticut General Statutes §4a-60j.	
4.	Any technical or descriptive literature, drawing or bid samples that are required have been included with the bid.	
5.	Form UCHC ITB-05 (CHRO & SEEC Compliance) must be completed in its entirety and submitted with each bid, even if the Bidder's company is family owned or operated, and regardless of the number of employees. Non-compliance may result in bid rejection.	
7.	If applicable, the ITB Addendum (UCHC ITB-11 Form and/or UCHC ITB-12 Form) has been signed and included with your bid.	
8.	If applicable, the following documents have been signed and uploaded on BizNet: a) **Non-discrimination Certification** b) **OPM Ethics Form 5** (Consulting Agreement Affidavit) – Contract Value of $50,000 or more c) **OPM Ethics Form 6** (Affirmation of Receipt of State Ethics Laws Summary) – Contract Cost of $500,000 or more	

NOTE: The bid is to be mailed or hand-delivered in time to be received no later than the designated opening date and time. Late bids are not accepted under any circumstances. Please allow enough time if you are mailing in your bid.

a) Please use the mailing label format below when submitting your bid via mail.

SEALED ITB NUMBER:	**UCHC4-39705749**	
NOT TO BE OPENED UNTIL:	**July 3, 2013**	**2:30 pm**
RETURN	**University of Connecticut Health Center**	
BID TO:	**263 Farmington Avenue MC 4036**	
	Farmington, CT 06032	

b) Hand delivered bids are to be presented at the following address:

University of Connecticut Health Center
Procurement Operations & Contracts
16 Munson Road 2nd Floor
Farmington, CT 06032

NOTE: All bids shall become the sole property of the University of Connecticut Health Center and will not be returned. Your submitted bid may be rejected if the following requirements are not met:

a) The following UCHC Request For Bid documents have been completed in its entirety and signed by a duly authorized representative of the company where applicable.
- UCHC ITB-03 Bidder's Info, OSHA, Debarment and W-9
- UCHC ITB-05 CHRO & SEEC Compliance
- UCHC ITB-08 Bidder's Statement of Qualifications
- UCHC ITB-09 BOD Meeting Schedule Form
- UCHC ITB-10 UCHC Business Associate Agreement *(if applicable)*

b) Applicable Non-discrimination Certification and OPM Ethics Forms referenced in item number (8.) above must be signed, notarized (where applicable), and uploaded on BizNet at the following website: https://www.biznet.ct.gov/AccountMaint/Login.aspx.

The links listed below are provided for your convenience. It is your responsibility to ensure that you are compliant with the most current laws, regulations, rules & policies.

Refer to "Guidance for Vendor Authorizations" at the following website:
http://www.das.state.ct.us/purchase/info/vendor_authorization_and_guidance_081106.pdf

Refer to "Guide to the Code of Ethics For Current or Potential State Contractors" at the following website:
http://www.ct.gov/ethics/cwp/view.asp?a=3488&q=414966

Refer to "State of Connecticut Supplier Diversity Program" at the following website:
http://www.das.state.ct.us/cr1.aspx?page=34

Refer to "State of Connecticut Executive Orders" at the following website:
http://www.das.state.ct.us/Purchase/Executive_Orders_new.pdf

Refer to "Executive Order 12549 on Debarment and Suspension" at the following website:
http://www.archives.gov/federal-register/codification/executive-order/12549.html

Refer to "Connecticut General Statues § §4a-60, 4a-60a, and 46a-56" at the following website:
http://www.cga.ct.gov/2011/pub/chap058.htm#Sec4a-60.htm **and** http://www.cga.ct.gov/2011/pub/chap814c.htm#Sec46a-56.htm

Margaret Gilbert
Buyer

860-679-1988
Telephone Number

mgilbert@adp.uchc.edu
E-mail Address

860-284-5873
Fax Number

STATE OF CONNECTICUT

UNIVERSITY OF CONNECTICUT HEALTH CENTER
Procurement Operations & Contracts
263 Farmington Avenue, MC4036
Farmington, CT 06032-4036

ITB NUMBER:	BID DUE DATE:	BID DUE TIME:
UCHC4-39705749	July 3, 2013	2:30 pm EST

ITB TITLE: Supply and Install Spencer Turbine Equipment UCHC Dental School

INVITATION TO BID: Pursuant to the provisions of Sections 10a-151a, 10a-151b and 4a-57 of the Connecticut General Statutes as amended, sealed bids will be received by the University of Connecticut Health Center, at the address above, for furnishing the commodities and/or services described above under ITB Title.

IMPORTANT: ALL pages of this form must be completed, signed and returned by the bidder as part of the bid package. Failure to complete and submit all pages may constitute grounds for rejection of your bid. By completing this form the Supplier agrees that it is in compliance with all applicable UCHC policies and procedures, federal, state, and local laws and regulations, including but not limited to Connecticut General Statutes Sections 10a-151a and 10a-151b, 4a-60 and 4a-60a.

SECTION 1 of 6: **BIDDER INFORMATION**

COMPLETE LEGAL BUSINESS NAME:	TAXPAYER ID NUMBER (TIN): ☐ SSN ☐ FEIN
BUSINESS NAME, TRADE NAME, DOING BUSINESS AS (IF DIFFERENT FROM ABOVE):	WEBSITE ADDRESS (IF APPLICABLE):
PRINCIPAL PLACE OF BUSINESS (IF DIFFERENT FROM ABOVE):	STATE BUSINESS ORGANIZED IN:

BUSINESS ENTITY: ☐ LLC ☐ NON-PROFIT ☐ PARTNERSHIP ☐ INDIVIDUAL/SOLE PROPRIETORSHIP ☐ CORPORATION ☐ OTHER

NOTE: IF YOUR BUSINESS IS AN *INDIVIDUAL/SOLE PROPRIETOR*, INDIVIDUAL'S NAME MUST APPEAR IN THE COMPLETE LEGAL BUSINESS NAME BLOCK ABOVE. IF YOUR BUSINESS IS A *PARTNERSHIP*, YOU MUST ATTACH THE NAMES AND TITLES OF ALL PARTNERS.

LIST TYPES OF PRODUCTS AND OR SERVICES PROVIDED:

_____ _____
_____ _____
_____ _____

IS YOUR BUSINESS CURRENTLY A **STATE OF CT** *CERTIFIED* SMALL BUSINESS ENTERPRISE? IF SO, PLEASE ATTACH A COPY OF THE CERTIFICATE? (PLEASE CHECK) ☐ YES ☐ NO	IS YOUR BUSINESS CURRENTLY A **FEDERALLY** *CERTIFIED* SMALL BUSINESS? IF SO, PLEASE ATTACH A COPY OF THE CERTIFICATE? (PLEASE CHECK) ☐ YES ☐ NO

IS YOUR BUSINESS CURRENTLY REGISTERED WITH THE STATE OF CT SECRETARY OF THE STATE'S OFFICE TO DO BUSINESS IN THE STATE OF CT? (PLEASE CHECK) ☐ YES ☐ NO

IF YOU ARE A CURRENT OR PREVIOUS *STATE EMPLOYEE*, INDICATE THE POSITION, AGENCY, AND AGENCY ADDRESS:

_____ _____
_____ _____
_____ _____
_____ _____

	CORPORATE ADDRESS:	REMITTANCE ADDRESS:
ADDRESS:		
ADDRESS:		
CITY, STATE, ZIP CODE:		
TELEPHONE NUMBER:		

SECTION 2 of 6: **PURCHASE ORDER DISTRIBUTION**

PLEASE INDICATE THE BEST METHOD OF PURCHASE ORDER DISTRIBUTION (PLEASE CHECK): ☐ FAX ☐ E-MAIL

CONTACT NAME:	
TELEPHONE NUMBER:	
FAX NUMBER:	
E-MAIL ADDRESS:	

SECTION 3 of 6: **AFFIRMATION OF BIDDER**

I _____ BEING A DULY AUTHORIZED REPRESENTATIVE OF _____
NAME OF AUTHORIZED PERSON COMPLETE LEGAL BUSINESS NAME

HEREBY CERTIFY AS FOLLOWS:

1. I/WE AGREE(S) TO BE BOUND BY ALL TERMS AND CONDITIONS INCLUDED IN THIS ITB NUMBER REFERENCED ON PAGE 1 OF THIS FORM.
2. IF SELECTED, I/WE FURTHER AGREE(S) TO EXECUTE A CONTRACT WITH UCHC IN A FORM PROVIDED BY UCHC, CONTAINING ALL OF UCHC'S TERMS AND CONDITIONS AND TO EXECUTE ALL STATE OF CONNECTICUT AFFIDAVITS AND CERTIFICATIONS WHICH ARE REQUIRED AT THE TIME OF CONTRACTING.
3. THE AUTHORITY FOR THE UNDERSIGNED TO BIND IS APPENDED HERETO.

SIGNATURE OF PERSON AUTHORIZED TO SIGN ON BEHALF OF THE ABOVE NAMED BUSINESS:	DATE EXECUTED:
SIGN HERE	

NAME OF AUTHORIZED PERSON:	TITLE OF AUTHORIZED PERSON:

SECTION 4 of 6: **OCCUPATIONAL SAFETY & HEALTH ACT (OSHA)**

The following information is required pursuant to Section 31-57b of the Connecticut General Statutes:

a.) In the past three years, have you, your company, or any firm, corporation, partnership or association in which you or your company have an interest, been cited for any willful or serious violations of any occupational safety and health act, standard, order or regulation? If yes, please attach a list of the following information for each violation/citation: the date of the violation, the date of the citation, the nature of the violation (including references to the statutes, regulations, standards or orders violated), the name of the individual or company cited, the name of the government agency that issued the citation, and the result/penalty.

☐ YES ☐ NO (PLEASE CHECK)

b.) In the past three years, have you, your company, or any firm, corporation, partnership or association in which you or your company have an interest, received any criminal convictions related to the injury or death of any employee? If yes, attach a list of the following information for each criminal conviction: the date of the incident resulting in the employee injury/death, the date of the criminal conviction, the court that issued the conviction, the nature of the conviction (including references to any statutes, regulations, standards or orders violated), the name of the individual or company convicted, and the result/penalty.

☐ YES ☐ NO (PLEASE CHECK)

SECTION 5 of 6: **DEBARMENT AND/OR SUSPENSION**

Is the bidder, any company official, or any subcontractor to the bidder presently debarred, suspended, proposed for debarment, declared ineligible, or voluntarily excluded from covered transactions by any governmental entity in accordance with UCHC Policy No. 2001-3 and applicable federal and state laws.

☐ YES ☐ NO (PLEASE CHECK)

Has the bidder, any company official, or any subcontractor to the bidder, received any notices of debarment and/or suspension from contracting with the State of Connecticut, the Federal Government, any governmental entity or any other state within the United States?

☐ YES ☐ NO (PLEASE CHECK)

The above signed bidder further affirms that they shall disclose to UCHC immediately in writing of any debarment, suspension, proposal for debarment, voluntary exclusion or other events that makes them an "ineligible person" at any time during the course of this RFP. An "Ineligible Person" is an individual or entity who: (i) is currently excluded, debarred, suspended, or otherwise ineligible to participate in the Federal health care programs or in Federal procurement or non-procurement programs; or (ii) has been convicted of a criminal offense that falls within the ambit of 42 U.S.C. § 1320a-7(a), but has not yet been excluded, debarred, suspended, or otherwise declared ineligible.

If the above signed bidder, any company official or any subcontractor to the bidder have received notices of debarment and/or suspension from contracting with the State of Connecticut, the Federal Government or any governmental entity, said notices must be attached to this document when submitting this bid.

SECTION 6 of 6: **DEBARMENT CERTIFICATION**

CERTIFICATION REGARDING DEBARMENT, SUSPENSION, INELIGIBILITY AND VOLUNTARY EXCLUSION - - LOWER TIER COVERED TRANSACTIONS

INSTRUCTIONS FOR CERTIFICATION

1) By signing and submitting this application, the prospective recipient of Federal assistance funds is providing the certification as set out below.
2) The certification in this clause is a material representation of fact upon which reliance was placed when this transaction was entered into. If it is later determined that the prospective recipient of Federal assistance funds knowingly rendered an erroneous certification, in addition to other remedies available to the Federal Government, UCHC may pursue available remedies, including suspension and/or debarment.
3) The prospective recipient of Federal assistance funds shall provide immediate written notice to the person to whom this application is submitted if at any time the prospective recipient of Federal assistance funds learns that its certification was erroneous when submitted or has become erroneous by reason of changed circumstances.
4) The terms "covered transaction," "debarred," "suspended," "ineligible," "lower tier covered transaction," "participant," "person," "primary covered transaction," "principal," "application," and "voluntarily excluded," as used in this clause, have the meanings set out in the Definitions and Coverage sections of the rules implementing Executive Order 12549.
5) The prospective recipient of Federal assistance funds agrees by submitting this application that, should the proposed covered transactions be entered into, it shall not knowingly enter into any lower tier covered transaction with a person who is debarred, suspended, declared ineligible, or voluntarily excluded from participation in this covered transaction, unless authorized by UCHC.
6) The prospective recipient of Federal assistance funds further agrees by submitting this application that it will include the clause titled "Certification Regarding Debarment, Suspension, Ineligibility and Voluntary Exclusion - Lower Tier Covered Transactions," without modification, in all lower tier covered transactions and in all solicitations for lower tier covered transactions.
7) A participant in a covered transaction may rely upon a certification of a prospective participant in a lower tier covered transaction that it is not debarred, suspended, ineligible, or voluntarily excluded from the covered transaction, unless it knows that the certification is erroneous. A participant may decide the method and frequency by which it determined the eligibility of its principals. Each participant may, but is not required, to check the List of Parties Excluded from procurement or Non-Procurement Programs.
8) Nothing contained in the foregoing shall be construed to require establishment of a system of records in order to render in good faith the certification required by this clause. The knowledge and information of a participant is not required to exceed that which is normally possessed by a prudent person in the ordinary course of business dealings.
9) Except for transactions authorized under Paragraph 5 of these instructions, if a participant in a covered transaction knowingly enters into a lower tier covered transaction with a person who is debarred, suspended, ineligible, or voluntarily excluded from participation in this transaction, in addition to other remedies available to the Federal Government, UCHC may pursue available remedies including suspension and/or debarment.

Before signing Certification, read all the instructions which are an integral part of the Certification.

1) The prospective recipient of Federal assistance funds certifies, by submission of this application, that neither it nor its principals are presently debarred, suspended, proposed for debarment, declared ineligible, or voluntarily excluded from participation in this transaction by any Federal department or agency.
2) Where the prospective recipient of Federal assistance funds is unable to certify to any of the statements in this certification, such prospective participant shall attach an explanation to this application.

Name of Authorized Representative | Title of Authorized Representative

Signature | Date

Margaret Gilbert
Buyer

860-679-1988
Telephone Number

mgilbert@adp.uchc.edu
E-mail Address

860-284-5873
Fax Number

STATE OF CONNECTICUT

UNIVERSITY OF CONNECTICUT HEALTH CENTER
Procurement Operations & Contracts
263 Farmington Avenue, MC4036
Farmington, CT 06032-4036

ITB NUMBER:	BID DUE DATE:	BID DUE TIME:	ITB SURETY:
UCHC4-39705749	July 3, 2013	2:30 PM EST	0

ITB TITLE: **Supply and Install Spencer Turbine Equipment UCHC Dental School**

IMPORTANT: ** Payment terms are net 45 days after receipt of invoice. Any deviation may result in rejection of bid submission. Prices shall include all transportation charges Freight on Board (FOB) University of CT Health Center. State of Connecticut is exempt from paying Federal Excise and CT Taxes per Connecticut General Statutes § 12-412. ** By completing this price schedule the Supplier agrees that it is in compliance with all applicable UCHC policies and procedures, federal, state, and local laws and regulations, including but not limited to Connecticut General Statutes Sections 10a-151a and 10a-151b, 4a-60 and 4a-60a.

Item No.	Description of commodity, equipment, and/or service	Qty.	Unit of Measure	Unit Price	Total Price
	The University of Connecticut Health Center (UCHC) is requesting responses from qualified organizations to supply and install new Spencer Turbine equipment as required for the UCHC Dental School vacuum system. (No substitutions) I. <u>Contractor Responsibilities</u> Below are the contractor responsibilities for the Replacement of Spencer Turbine Equipment UCHC Dental School project: A. Contractor will install new Spencer Turbine Vacuum Producer with ten (10) inch flanged inlet/outlet and thirty-six (36) inch casing and four (4) fans. B. Scope of work includes the dismantling of existing vacuum equipment, electrical supply systems and inline piping lines as determined by site review with the UCHC Project Manager. 1. Contractor will schedule all project work for weekend hours only. 2. Contractor is to verify all field conditions and dimensions prior to ordering materials and scheduling work.	**1**	**LOT**	**$____**	**$____**

	3. Contractor is to provide all drawings necessary to complete this project scope of work in accordance with State of Connecticut and local codes. 4. Contractor shall provide all appliances needed to complete the requested scope of work and make equipment ready for operation. 5. Contractor shall guarantee that all workmanship and materials free from defect for a period of one (1) year following acceptance of work by UCHC. C. Project scope will also include the disconnecting and removal of existing Spencer Turbine electrical motor and the reinstallation of the same motor to include proper shimming and balance of motor unit and electrical connection at new turbine. 1. In addition, there are inline piping/flanges to be removed and replaced with new galvanized piping and flanges as required to match existing system lines to include piping line to existing separator tank and second inline turbine unit. 2. Contractor shall include the supply and installation of any new coupling connections as required for the new piping lines being replaced to these turbines and separator tank. D. Contractor is to properly schedule all inspections required by State of Connecticut codes and UConn system requirements as well as perform final testing inspection and certification of a complete and properly approved operating system. E. Piping material deliveries are to scheduled and handled by the Contractor with notification to UConn project manager or their designee. 1. UConn Project Manager or their designee will provide a suitable store/staging area for the material delivery. UConn is not responsible to receive or handle project				

	turbine, piping/flange materials. F. Contractor is required to schedule all shutdowns and disconnects with UConn Project Manager or their designee prior to system dismantling and restart. G. Contractor shall: 1. Provide UConn with three (3) copies of detailed operating and maintenance manuals in three (3) ring binders. 2. Provide qualified services to instruct UConn staff in the operation and maintenance of new equipment installed under the contract, including provision of any technical manuals or tools required for proper maintenance. 3. Include all warranty information with the response and options/costs for preventive maintenance programs and/or contract service plans effective following the expiration of the equipment warranty period. 4. Adhere to all applicable federal, state and local laws and regulations in the performance of the work. 5. Review and adhere to applicable guidelines in the UCHC Environmental Health and Safety (EHS) Policies, Regulations and Rules for Construction, Service and Maintenance Contractors; (http://fdo.uchc.edu/capitalprojects/index.html) 6. Perform all work in a safe manner 7. Immediately correct any dangerous condition caused by or resulting from the contractor's work at his or her own sole expense. 8. Be held solely responsible for any damage to existing structures; systems, equipment and/or site caused by him or his employees and shall repair or replace it to its original condition at no additional cost to the using state agency. 9. Keep the site cleaned and swept on a **daily** basis, or more often if required to keep premises clean and safe.				

	10. Remove all rubbish, materials, and debris from the work site on a daily basis. 11. Provide employees who are fully qualified to perform this work. Contractor shall provide all applicable documentation their employees and any subcontractors are certified to perform services with their response. 12. Provide a list all sub-contractors Contractor intends to utilize on this project. 13. Provide subcontractors, if required, who possess all current appropriate licenses and/or certifications UCHC shall hold all subcontractors to the same level of scrutiny as if they were the contractor submitting the proposal. It is understood that the contractor awarded this work is solely responsible for their subcontractor's work. UCHC reserves the right to approve any and all sub-contractors to be used on this project H. Awarded Contractor shall agree to: 1. Adhere to all current UCHC parking requirements. 2. Provide evidence of Insurance in the amounts required by the State of Connecticut. Contractor shall obtain required insurance at its own cost and maintain coverage for the duration of the contraction period. I. Proposer acknowledges receipt and acceptance of the UCHC standard contract. (See Appendix A) Proposers will be expected to sign the UCHC standard contract as written, unless the ITB response includes a document that sets forth proposer's specific, requested changes to the UCHC standard contract, using either the "Compare" or "Track changes" functions in MS Word. Such requested changes (in an MS Word editable document) must be made available in electronic format upon request. In addition, proposer must include contact information for the person responsible (at Proposer Company) for negotiating any requested contract changes. Any proposed changes to the UCHC Standard contract will be considered a conditional proposal which may result in rejection of proposer's response, in whole or in part. By submitting a response, Contractor agrees that they have read, understood, and agree to be bound by the terms and conditions contained within the UCHC Contract document should award be made to their company.				

	J. A site visit is recommended before submitting a response to this Invitation to Bid. The site visit will be held on Monday, June 17, 2013 at 4:00 PM. Suppliers are asked to contact Robert Tryon, UCHC Project Manager, at 860-679-4672 with their intent to attend the site visit. All suppliers are asked to adhere to all parking regulations while on campus. K. Proposer's References 1. Provide three (3) specific commercial references. References must be able to comment on the Company's capability to perform the services specified in this BID. The contact person must be an individual familiar with the Bidder and its day-to-day performance. If the Bidder has been a State contractor within the last three (3) years, the Bidder must include a State of Connecticut reference. Bidders shall call or write their references to ensure the accuracy of their contact information and their willingness and capability to be references. References must include: a) Organization's name, address, telephone number, fax number, email address, and Web address (organizations must be of comparable size and complexity as UCHC) b) Name and title of a contact person c) Brief description of the services provided to referenced customer d) Initial service date **Bid Notes:** 1) UCHC reserves the right to refuse to consider for award any bid that is incomplete. Bid Responses must be signed and include all applicable state bid forms, affidavits and certifications. (See Bidders Checklist) 2) UCHC reserves the right to refuse any or all bids if cost or service requirements are not met. 3) Contractor s shall provide UCHC with one (1) original signed response and one (1) electronic copy (CD or jump drive) in pdf format. 4) Responses are to be submitted in a sealed envelope clearly				

	marked with the bid number, bid title and due date and time. Any response received after this date and time will not be considered 5) **No late bids will be accepted. Bid Due date is July 3, 2013, by 2:30PM.** 6) Questions: a) Questions submitted other than by email will not be accepted or considered. The early submission of questions is encouraged. It is solely the Contractor's responsibility to ensure and verify UCHC's receipt of questions. b) Questions for the purpose of clarifying this bid shall be submitted in writing (**Deadline for submission of questions will be June 24, 2013 by 4:00 PM (EST).** Under no circumstances may any vendor or representative of the Contractor contact any employee of UCHC other than the authorized contact people listed in this bid document. Failure to adhere to this requirement may result in disqualification of that Contractor's bid response c) Official responses to all questions will be in a Questions/Answers Addendum to this Bid posted on the State Contracting portal: http://www.das.state.ct.us/Purchase/Portal/Portal_Home.asp. d) It is solely the Contractor's responsibility to access the State Contracting portal or the UCHC Web site to obtain all Addenda or official announcements pertaining to this Bid. Contractor s shall provide a signed acknowledgement of the receipt of all Addenda with their proposal.				

BACKGROUND CHECKS:
In accordance with UCHC Policy No. 2001-3 and applicable federal and state laws, the University of Connecticut Health Center Public Safety Department shall conduct security background investigations and federal sanctions checks on all contractor and Supplier employees prior to commencing work on UCHC premises. Effective July 1, 2008, the UCHC Public Safety Department shall institute a fee of $75.00 for each background check completed. The fee is payable in advance and shall accompany the submission of the Background Information Sheet.

UCHC CONTACT INFORMATION:
Please use the following name and address for ALL correspondence with the University of Connecticut Health Center concerning this RFQ. All correspondence must be directed to:

Margaret Gilbert
University of Connecticut Health Center
Procurement Operations & Contracts, MC 4036
16 Munson Road, 2nd Floor
Farmington, CT 06034-4036

NOTE:
Upon notification of the lowest qualified Supplier, the Supplier may be required to successfully execute a contract in accordance with UCHC and the State of CT contracting laws and regulations.

SPECIFY DELIVERY: AFTER RECEIPT OF ORDER (ARO)	
PAYMENT TERMS:	**CASH DISCOUNT _____ % _____ # OF DAYS *(NET 45 DAYS)***
SSN OR FEIN:	**EMAIL:**
PHONE:	**FAX:**
SUPPLIER NAME:	
SUPPLIER STREET ADDRESS:	
CITY, STATE, ZIP CODE:	
NAME OF PERSON AUTHORIZED TO SIGN ON BEHALF OF THE ABOVE NAMED SUPPLIER:	
SIGNATURE OF PERSON AUTHORIZED TO SIGN ON BEHALF OF THE ABOVE NAMED SUPPLIER:	
DATE SIGNED:	

*****Attach additional pages if needed*****

SPENCER TURBINE REPLACEMENT
SCALE: NONE

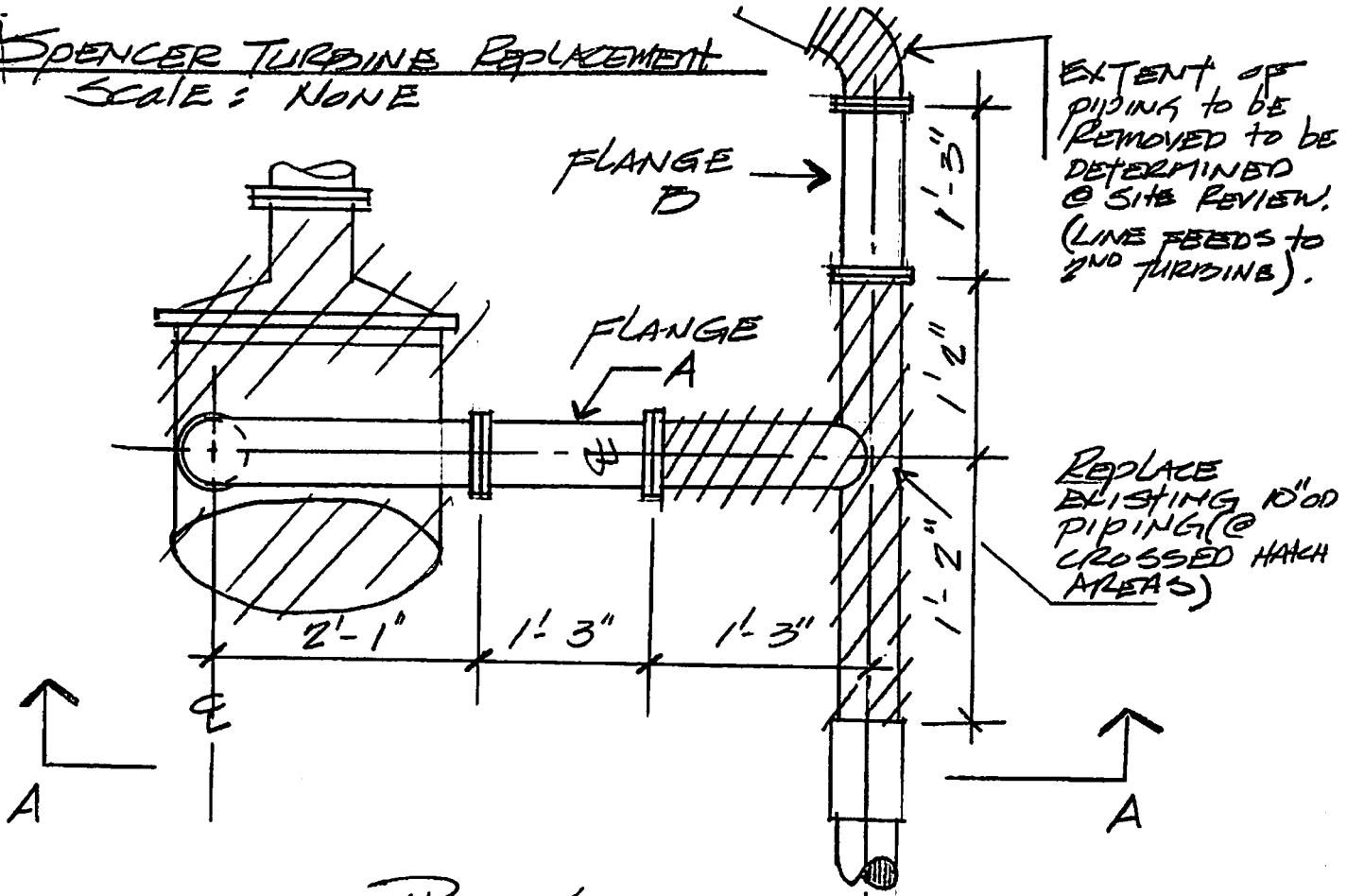

PLAN VIEW
NO SCALE

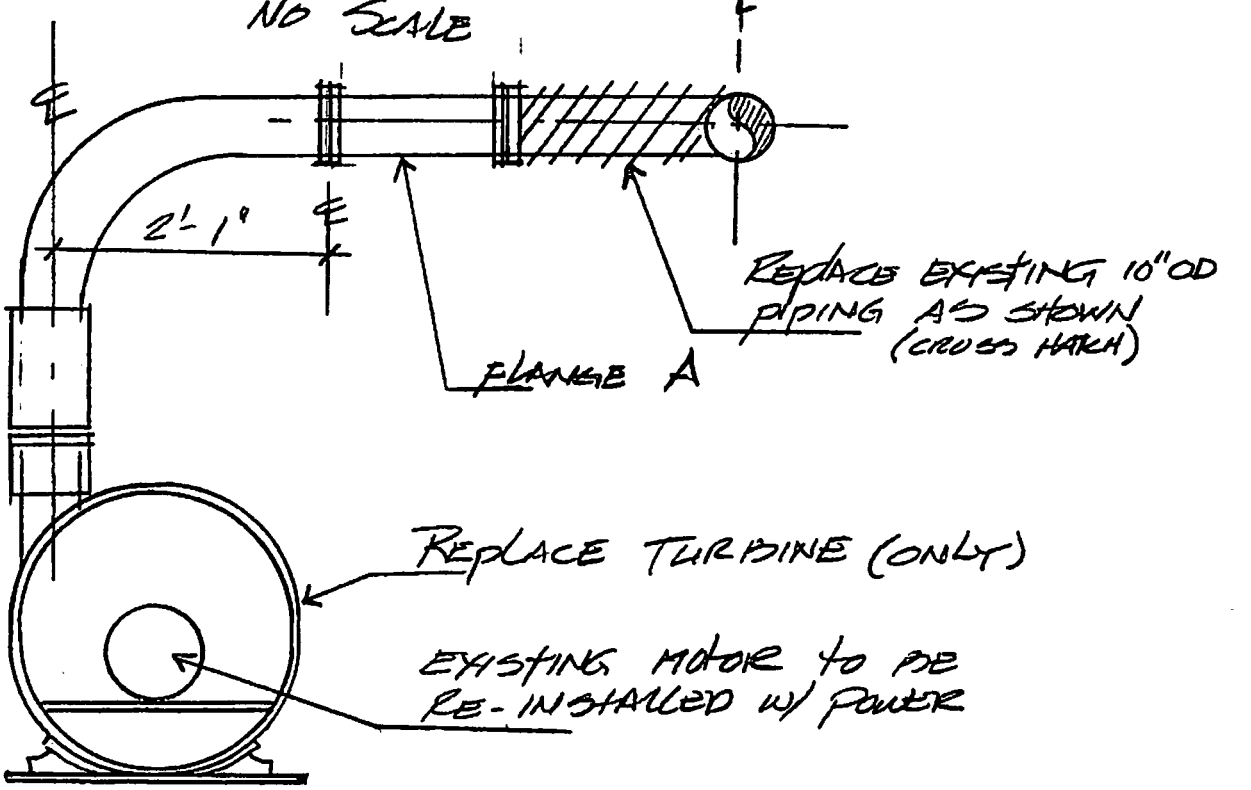

ELEV A
NO SCALE

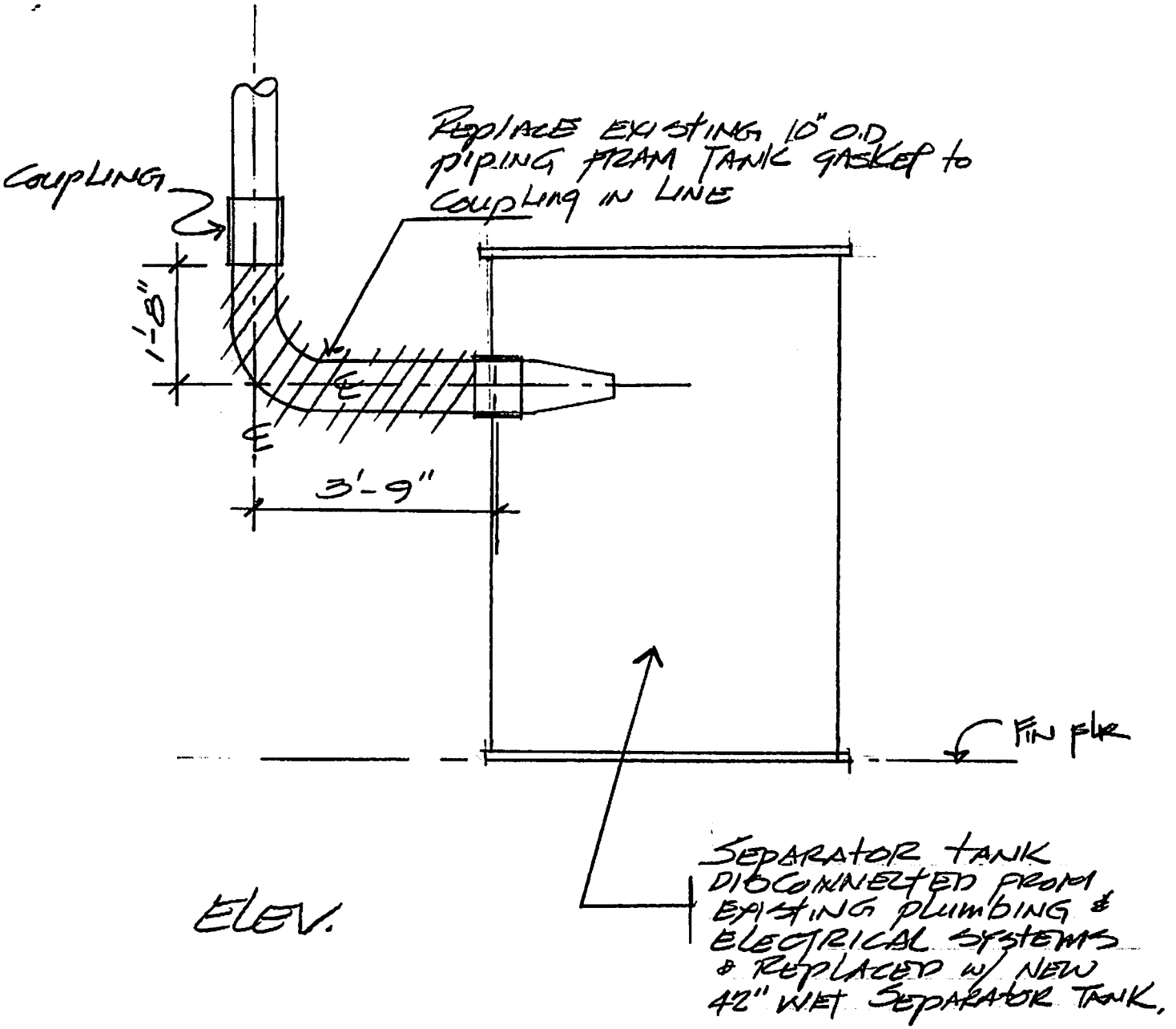
COUPLING
REPLACE EXISTING 10" O.D PIPING FROM TANK GASKET to COUPLING IN LINE
1'-8"
3'-9"
FIN FLR
SEPARATOR TANK DISCONNECTED FROM EXISTING PLUMBING & ELECTRICAL SYSTEMS & REPLACED W/ NEW 42" WET SEPARATOR TANK.

ELEV.

Form **W-9**
(Rev. December 2011)
Department of the Treasury
Internal Revenue Service

Request for Taxpayer Identification Number and Certification

Give Form to the requester. Do not send to the IRS.

Print or type
See **Specific Instructions** on page 2.

Name (as shown on your income tax return)

Business name/disregarded entity name, if different from above

Check appropriate box for federal tax classification:
☐ Individual/sole proprietor ☐ C Corporation ☐ S Corporation ☐ Partnership ☐ Trust/estate

☐ Limited liability company. Enter the tax classification (C=C corporation, S=S corporation, P=partnership) ▶

☐ Other (see instructions) ▶

☐ Exempt payee

Address (number, street, and apt. or suite no.)

Requester's name and address (optional)

City, state, and ZIP code

List account number(s) here (optional)

Part I Taxpayer Identification Number (TIN)

Enter your TIN in the appropriate box. The TIN provided must match the name given on the "Name" line to avoid backup withholding. For individuals, this is your social security number (SSN). However, for a resident alien, sole proprietor, or disregarded entity, see the Part I instructions on page 3. For other entities, it is your employer identification number (EIN). If you do not have a number, see *How to get a TIN* on page 3.

Note. If the account is in more than one name, see the chart on page 4 for guidelines on whose number to enter.

Social security number
☐☐☐ – ☐☐ – ☐☐☐☐

Employer identification number
☐☐ – ☐☐☐☐☐☐☐

Part II Certification

Under penalties of perjury, I certify that:

1. The number shown on this form is my correct taxpayer identification number (or I am waiting for a number to be issued to me), and
2. I am not subject to backup withholding because: (a) I am exempt from backup withholding, or (b) I have not been notified by the Internal Revenue Service (IRS) that I am subject to backup withholding as a result of a failure to report all interest or dividends, or (c) the IRS has notified me that I am no longer subject to backup withholding, and
3. I am a U.S. citizen or other U.S. person (defined below).

Certification instructions. You must cross out item 2 above if you have been notified by the IRS that you are currently subject to backup withholding because you have failed to report all interest and dividends on your tax return. For real estate transactions, item 2 does not apply. For mortgage interest paid, acquisition or abandonment of secured property, cancellation of debt, contributions to an individual retirement arrangement (IRA), and generally, payments other than interest and dividends, you are not required to sign the certification, but you must provide your correct TIN. See the instructions on page 4.

Sign Here **Signature of U.S. person ▶** **Date ▶**

General Instructions

Section references are to the Internal Revenue Code unless otherwise noted.

Purpose of Form

A person who is required to file an information return with the IRS must obtain your correct taxpayer identification number (TIN) to report, for example, income paid to you, real estate transactions, mortgage interest you paid, acquisition or abandonment of secured property, cancellation of debt, or contributions you made to an IRA.

Use Form W-9 only if you are a U.S. person (including a resident alien), to provide your correct TIN to the person requesting it (the requester) and, when applicable, to:

1. Certify that the TIN you are giving is correct (or you are waiting for a number to be issued),

2. Certify that you are not subject to backup withholding, or

3. Claim exemption from backup withholding if you are a U.S. exempt payee. If applicable, you are also certifying that as a U.S. person, your allocable share of any partnership income from a U.S. trade or business is not subject to the withholding tax on foreign partners' share of effectively connected income.

Note. If a requester gives you a form other than Form W-9 to request your TIN, you must use the requester's form if it is substantially similar to this Form W-9.

Definition of a U.S. person. For federal tax purposes, you are considered a U.S. person if you are:

- An individual who is a U.S. citizen or U.S. resident alien,
- A partnership, corporation, company, or association created or organized in the United States or under the laws of the United States,
- An estate (other than a foreign estate), or
- A domestic trust (as defined in Regulations section 301.7701-7).

Special rules for partnerships. Partnerships that conduct a trade or business in the United States are generally required to pay a withholding tax on any foreign partners' share of income from such business. Further, in certain cases where a Form W-9 has not been received, a partnership is required to presume that a partner is a foreign person, and pay the withholding tax. Therefore, if you are a U.S. person that is a partner in a partnership conducting a trade or business in the United States, provide Form W-9 to the partnership to establish your U.S. status and avoid withholding on your share of partnership income.

STATE OF CONNECTICUT
COMMISSION ON HUMAN RIGHTS AND OPPORTUNITIES

NOTICE CONCERNING CONTRACT COMPLIANCE RESPONSIBILITIES

TO ALL LABOR UNIONS, WORKER'S REPRESENTATIVES AND VENDORS:

Any contract this contractor has with the State of Connecticut or political subdivisions of the state other than municipalities shall be performed in accordance with Connecticut General Statues Section 4a-60 and Section 4a-60a.

1. The contractor agrees to provide the Commission on Human Rights and Opportunities (CHRO) with any information concerning this contractor's employment practices and procedures which relates to our responsibilities under Connecticut General Statues Sections 4a-60 or 46a-56 or Section 4a-60a; and

2. The contractor agrees to include the provisions of Connecticut General Statues Section 46a-60(a) and Section 4a-60a in each and every subcontract and purchase order and to take whatever action the CHRO deems necessary to enforce these provisions.

WITH REGARD TO RACE, COLOR, RELIGIOUS CREED, AGE, MARITAL STATUS, NATIONAL ORIGIN, ANCESTRY, SEX, MENTAL RETARDATION OR PHYSICAL DISABILITY:

1. The contractor shall not discriminate or permit discrimination against anyone;

2. The contractor shall take affirmative action so that persons applying for employment are hired on the basis of job-related qualifications and that employees once hired are treated without regard to their race, color, religious creed, age, marital status, national origin, ancestry, sex, mental retardation or physical disability, unless the contractor can show that the disability prevents performance of the work involved;

3. The contractor shall state in all advertisements for employees that it is an affirmative action-equal opportunity employer;

4. The contractor shall comply with Connecticut General Statues Sections 4a-60, 46a-68e and 46a-68f and with each regulation or relevant order issued by the CHRO under Connecticut General Statues Sections 46a-56, 46a-68e and 46a-68f; and

5. The contractor shall make, if the contract is a public works contract, good faith efforts to employ minority business enterprises as subcontractors and suppliers of materials.

WITH REGARD TO SEXUAL ORIENTATION, WHICH INCLUDES HOMOSEXUALITY, BISEXUALITY AND HETEROSEXUALITY:

1. The contractor will not discriminate or permit discrimination against anyone, and employees will be treated without regard to their sexual orientation once employed; and

2. The contractor agrees to fully comply with Section 4a-60a and each regulation or relevant order issued by the CHRO under Connecticut General Statues Section 46a-56.

Persons having questions about this notice or their rights under the law are urged to contact the:

COMMISSION ON HUMAN RIGHTS AND OPPORTUNITIES
DIVISION OF AFFIRMATIVE ACTION, MONITORING & CONTRACT COMPLIANCE

25 Sigourney Street
Hartford, Connecticut 06106
(860) 541-3400

COPIES OF THIS NOTICE SHALL BE POSTED IN CONSPICUOUS PLACES
AVAILABLE TO ALL EMPLOYEES AND APPLICANTS FOR EMPLOYMENT

COMMISSION ON HUMAN RIGHTS AND OPPORTUNITIES
CONTRACT COMPLIANCE REGULATIONS
NOTIFICATION TO BIDDERS

(Revised 09/17/07)

The contract to be awarded is subject to contract compliance requirements mandated by Sections 4a-60 and 4a-60a of the Connecticut General Statutes; and, when the awarding agency is the State, Sections 46a-71(d) and 46a-81i(d) of the Connecticut General Statutes. There are Contract Compliance Regulations codified at Section 46a-68j-21 through 43 of the Regulations of Connecticut State Agencies, which establish a procedure for awarding all contracts covered by Sections 4a-60 and 46a-71(d) of the Connecticut General Statutes.

According to Section 46a-68j-30(9) of the Contract Compliance Regulations, every agency awarding a contract subject to the contract compliance requirements has an obligation to "aggressively solicit the participation of legitimate minority business enterprises as bidders, contractors, subcontractors and suppliers of materials." "Minority business enterprise" is defined in Section 4a-60 of the Connecticut General Statutes as a business wherein fifty-one percent or more of the capital stock, or assets belong to a person or persons: "(1) Who are active in daily affairs of the enterprise; (2) who have the power to direct the management and policies of the enterprise; and (3) who are members of a minority, as such term is defined in subsection (a) of Section 32-9n." "Minority" groups are defined in Section 32-9n of the Connecticut General Statutes as "(1) Black Americans . . . (2) Hispanic Americans . . . (3) persons who have origins in the Iberian Peninsula . . . (4)Women . . . (5) Asian Pacific Americans and Pacific Islanders; (6) American Indians . . ." An individual with a disability is also a minority business enterprise as provided by Section 4a-60g of the Connecticut General Statutes. The above definitions apply to the contract compliance requirements by virtue of Section 46a-68j-21(11) of the Contract Compliance Regulations.

The awarding agency will consider the following factors when reviewing the bidder's qualifications under the contract compliance requirements:

(a) the bidder's success in implementing an affirmative action plan;
(b) the bidder's success in developing an apprenticeship program complying with Sections 46a-68-1 to 46a-68-17 of the Administrative Regulations of Connecticut State Agencies, inclusive;
(c) the bidder's promise to develop and implement a successful affirmative action plan;
(d) the bidder's submission of employment statistics contained in the "Employment Information Form", indicating that the composition of its workforce is at or near parity when compared to the racial and sexual composition of the workforce in the relevant labor market area; and
(e) the bidder's promise to set aside a portion of the contract for legitimate minority business enterprises. See Section 46a-68j-30(10)(E) of the Contract Compliance Regulations.

INSTRUCTIONS AND OTHER INFORMATION

The following BIDDER CONTRACT COMPLIANCE MONITORING REPORT must be completed in full, signed, and submitted with the bid for this contract. The contract awarding agency and the Commission on Human Rights and Opportunities will use the information contained thereon to determine the bidders compliance to Sections 4a-60 and 4a-60a CONN. GEN. STAT., and Sections 46a-68j-23 of the Regulations of Connecticut State Agencies regarding equal employment opportunity, and the bidder's good faith efforts to include minority business enterprises as subcontractors and suppliers for the work of the contract.

1) Definition of Small Contractor

Section 4a-60g CONN. GEN. STAT. defines a small contractor as a company that has been doing business under the same management and control and has maintained its principal place of business in Connecticut for a one year period immediately prior to its application for certification under this section, had gross revenues not exceeding ten million dollars in the most recently completed fiscal year, and at least fifty-one percent of the ownership of which is held by a person or persons who are active in the daily affairs of the company, and have the power to direct the management and policies of the company, except that a nonprofit corporation shall be construed to be a small contractor if such nonprofit corporation meets the requirements of subparagraphs (A) and (B) of subdivision 4a-60g CONN. GEN. STAT.

2) Description of Job Categories (as used in Part IV Bidder Employment Information) (Page 2)

MANAGEMENT: Managers plan, organize, direct, and control the major functions of an organization through subordinates who are at the managerial or supervisory level. They make policy decisions and set objectives for the company or departments. They are not usually directly involved in production or providing services. Examples include top executives, public relations managers, managers of operations specialties (such as financial, human resources, or purchasing managers), and construction and engineering managers.

BUSINESS AND FINANCIAL OPERATIONS: These occupations include managers and professionals who work with the financial aspects of the business. These occupations include accountants and auditors, purchasing agents, management analysts, labor relations specialists, and budget, credit, and financial analysts.

MARKETING AND SALES: Occupations related to the act or process of buying and selling products and/or services such as sales engineer, retail sales workers and sales representatives including wholesale.

LEGAL OCCUPATIONS: In-House Counsel who is charged with providing legal advice and services in regards to legal issues that may arise during the course of standard business practices. This category also includes assistive legal occupations such as paralegals, legal assistants.

COMPUTER SPECIALISTS: Professionals responsible for the computer operations within a company are grouped in this category. Examples of job titles in this category include computer programmers, software engineers, database administrators, computer scientists, systems analysts, and computer support specialists

ARCHITECTURE AND ENGINEERING: Occupations related to architecture, surveying, engineering, and drafting are included in this category. Some of the job titles in this category include electrical and electronic engineers, surveyors, architects, drafters, mechanical engineers, materials engineers, mapping technicians, and civil engineers.

OFFICE AND ADMINISTRATIVE SUPPORT: All clerical-type work is included in this category. These jobs involve the preparing, transcribing, and preserving of written communications and records; collecting accounts; gathering and distributing information; operating office machines and electronic data processing equipment; and distributing mail. Job titles listed in this category include telephone operators, bill and account collectors, customer service representatives, dispatchers, secretaries and administrative assistants, computer operators and clerks (such as payroll, shipping, stock, mail and file).

BUILDING AND GROUNDS CLEANING AND MAINTENANCE: This category includes occupations involving landscaping, housekeeping, and janitorial services. Job titles found in this category include supervisors of landscaping or housekeeping, janitors, maids, grounds maintenance workers, and pest control workers.

CONSTRUCTION AND EXTRACTION: This category includes construction trades and related occupations. Job titles found in this category include boilermakers, masons (all types), carpenters, construction laborers, electricians, plumbers (and related trades), roofers, sheet metal workers, elevator installers, hazardous materials removal workers, paperhangers, and painters. Paving, surfacing, and tamping equipment operators; drywall and ceiling tile installers; and carpet, floor and tile installers and finishers are also included in this category. First line supervisors, foremen, and helpers in these trades are also grouped in this category..

INSTALLATION, MAINTENANCE AND REPAIR: Occupations involving the installation, maintenance, and repair of equipment are included in this group. Examples of job titles found here are heating, ac, and refrigeration mechanics and installers; telecommunication line installers and repairers; heavy vehicle and mobile equipment service technicians and mechanics; small engine mechanics; security and fire alarm systems installers; electric/electronic repair, industrial, utility and transportation equipment; millwrights; riggers; and manufactured building and mobile home installers. First line supervisors, foremen, and helpers for these jobs are also included in the category.

MATERIAL MOVING WORKERS: The job titles included in this group are Crane and tower operators; dredge, excavating, and lading machine operators; hoist and winch operators; industrial truck and tractor operators; cleaners of vehicles and equipment; laborers and freight, stock, and material movers, hand; machine feeders and offbearers; packers and packagers, hand; pumping station operators; refuse and recyclable material collectors; and miscellaneous material moving workers.

PRODUCTION WORKERS: The job titles included in this category are chemical production machine setters, operators and tenders; crushing/grinding workers; cutting workers; inspectors, testers sorters, samplers, weighers; precious stone/metal workers; painting workers; cementing/gluing machine operators and tenders; etchers/engravers; molders, shapers and casters except for metal and plastic; and production workers.

3) Definition of Racial and Ethnic Terms (as used in Part IV Bidder Employment Information)

White (not of Hispanic Origin)- All persons having origins in any of the original peoples of Europe, North Africa, or the Middle East. Black(not of Hispanic Origin)- All persons having origins in any of the Black racial groups of Africa. Hispanic- All persons of Mexican, Puerto Rican, Cuban, Central or South American, or other Spanish culture or origin, regardless of race.	Asian or Pacific Islander- All persons having origins in any of the original peoples of the Far East, Southeast Asia, the Indian subcontinent, or the Pacific Islands. This area includes China, India, Japan, Korea, the Philippine Islands, and Samoa. American Indian or Alaskan Native- All persons having origins in any of the original peoples of North America, and who maintain cultural identification through tribal affiliation or community recognition.

BIDDER CONTRACT COMPLIANCE MONITORING REPORT

PART I - Bidder Information

Company Name Street Address City & State Chief Executive	Bidder Federal Employer Identification Number_____ Or Social Security Number_____
Major Business Activity (brief description)	Bidder Identification (response optional/definitions on page 1) -Bidder is a small contractor. Yes☐ No☐ -Bidder is a minority business enterprise Yes☐ No☐ (If yes, check ownership category) Black☐ Hispanic☐ Asian American☐ American Indian/Alaskan Native☐ Iberian Peninsula☐ Individual(s) with a Physical Disability☐ Female☐
Bidder Parent Company (If any)	- Bidder is certified as above by State of CT Yes☐ No☐
Other Locations in Ct. (If any)	- DAS Certification Number _____

PART II - Bidder Nondiscrimination Policies and Procedures

1. Does your company have a written Affirmative Action/Equal Employment Opportunity statement posted on company bulletin boards? Yes☐ No☐	7. Do all of your company contracts and purchase orders contain non-discrimination statements as required by Sections 4a-60 & 4a-60a Conn. Gen. Stat.? Yes☐ No☐
2. Does your company have the state-mandated sexual harassment prevention in the workplace policy posted on company bulletin boards? Yes☐ No☐	8. Do you, upon request, provide reasonable accommodation to employees, or applicants for employment, who have physical or mental disability? Yes☐ No☐
3. Do you notify all recruitment sources in writing of your company's Affirmative Action/Equal Employment Opportunity employment policy? Yes☐ No☐	9. Does your company have a mandatory retirement age for all employees? Yes☐ No☐
4. Do your company advertisements contain a written statement that you are an Affirmative Action/Equal Opportunity Employer? Yes☐ No☐	10. If your company has 50 or more employees, have you provided at least two (2) hours of sexual harassment training to all of your supervisors? Yes☐ No☐ NA☐
5. Do you notify the Ct. State Employment Service of all employment openings with your company? Yes☐ No☐	11. If your company has apprenticeship programs, do they meet the Affirmative Action/Equal Employment Opportunity requirements of the apprenticeship standards of the Ct. Dept. of Labor? Yes☐ No☐ NA☐
6. Does your company have a collective bargaining agreement with workers? Yes☐ No☐ 6a. If yes, do the collective bargaining agreements contain non-discrim ination clauses covering all workers? Yes☐ No☐ 6b. Have you notified each union in writing of your commitments under the nondiscrimination requirements of contracts with the state of Ct? Yes☐ No☐	12. Does your company have a written affirmative action Plan? Yes☐ No☐ If no, please explain. 13. Is there a person in your company who is responsible for equal employment opportunity? Yes☐ No☐ If yes, give name and phone number. _____ _____

Part III - Bidder Subcontracting Practices (Page 4)

1. Will the work of this contract include subcontractors or suppliers? Yes No

1a. If yes, please list all subcontractors and suppliers and report if they are a small contractor and/or a minority business enterprise. (defined on page 1 / use additional sheet if necessary)

1b. Will the work of this contract require additional subcontractors or suppliers other than those identified in 1a. above? Yes No

PART IV - Bidder Employment Information Date:

JOB CATEGORY *	OVERALL TOTALS	WHITE (not of Hispanic origin)		BLACK (not of Hispanic origin)		HISPANIC		ASIAN or PACIFIC ISLANDER		AMERICAN INDIAN or ALASKAN NATIVE	
		Male	Female	Male	Female	Male	Female	Male	Female	male	female
Management											
Business & Financial Ops											
Marketing & Sales											
Legal Occupations											
Computer Specialists											
Architecture/Engineering											
Office & Admin Support											
Bldg/ Grounds Cleaning/Maintenance											
Construction & Extraction											
Installation , Maintenance & Repair											
Material Moving Workers											
Production Occupations											
TOTALS ABOVE											
Total One Year Ago											
FORMAL ON THE JOB TRAINEES (ENTER FIGURES FOR THE SAME CATEGORIES AS ARE SHOWN ABOVE)											
Apprentices											
Trainees											

*NOTE: JOB CATEGORIES CAN BE CHANGED OR ADDED TO (EX. SALES CAN BE ADDED OR REPLACE A CATEGORY NOT USED IN YOUR COMPANY)

PART V - Bidder Hiring and Recruitment Practices (Page 5)

1. Which of the following recruitment sources are used by you? (Check yes or no, and report percent used)

SOURCE	YES	NO	% of applicants provided by source
State Employment Service			
Private Employment Agencies			
Schools and Colleges			
Newspaper Advertisement			
Walk Ins			
Present Employees			
Labor Organizations			
Minority/Community Organizations			
Others (please identify)			

2. Check (X) any of the below listed requirements that you use as a hiring qualification

(X)	
	Work Experience
	Ability to Speak or Write English
	Written Tests
	High School Diploma
	College Degree
	Union Membership
	Personal Recommendation
	Height or Weight
	Car Ownership
	Arrest Record
	Wage Garnishments

3. Describe below any other practices or actions that you take which show that you hire, train, and promote employees without discrimination

Certification (Read this form and check your statements on it CAREFULLY before signing). I certify that the statements made by me on this BIDDER CONTRACT COMPLIANCE MONITORING REPORT are complete and true to the best of my knowledge and belief, and are made in good faith. I understand that if I knowingly make any misstatements of facts, I am subject to be declared in non-compliance with Section 4a-60, 4a-60a, and related sections of the CONN. GEN. STAT.

(Signature)	(Title)	(Date Signed)	(Telephone)

SEEC FORM 10
CONNECTICUT STATE ELECTIONS ENFORCEMENT COMMISSION
Rev. 1/11
Page 1 of 3

Notice to Executive Branch State Contractors and Prospective State Contractors of Campaign Contribution and Solicitation Limitations

Acknowledgement of Receipt of Explanation of Prohibitions for Incorporation in Contracting and Bidding Documents

This notice is provided under the authority of Connecticut General Statutes §9-612(g)(2), as amended by P.A. 10-1, and is for the purpose of informing state contractors and prospective state contractors of the following law (italicized words are defined on the reverse side of this page).

CAMPAIGN CONTRIBUTION AND SOLICITATION LIMITATIONS

No *state contractor, prospective state contractor, principal of a state contractor or principal of a prospective state contractor*, with regard to a *state contract* or *state contract solicitation* with or from a state agency in the executive branch or a quasi-public agency or a holder, or principal of a holder of a valid prequalification certificate, shall make a contribution to (i) an exploratory committee or candidate committee established by a candidate for nomination or election to the office of Governor, Lieutenant Governor, Attorney General, State Comptroller, Secretary of the State or State Treasurer, (ii) a political committee authorized to make contributions or expenditures to or for the benefit of such candidates, or (iii) a party committee (which includes town committees).

In addition, no holder or principal of a holder of a valid prequalification certificate, shall make a contribution to (i) an exploratory committee or candidate committee established by a candidate for nomination or election to the office of State senator or State representative, (ii) a political committee authorized to make contributions or expenditures to or for the benefit of such candidates, or (iii) a party committee.

On and after January 1, 2011, no state contractor, prospective state contractor, principal of a state contractor or principal of a prospective state contractor, with regard to a state contract or state contract solicitation with or from a state agency in the executive branch or a quasi-public agency or a holder, or principal of a holder of a valid prequalification certificate, shall **knowingly** *solicit* contributions from the state contractor's or prospective state contractor's employees or from a *subcontractor* or *principals of the subcontractor* on behalf of (i) an exploratory committee or candidate committee established by a candidate for nomination or election to the office of Governor, Lieutenant Governor, Attorney General, State Comptroller, Secretary of the State or State Treasurer, (ii) a political committee authorized to make contributions or expenditures to or for the benefit of such candidates, or (iii) a party committee.

DUTY TO INFORM

State contractors and prospective state contractors are required to inform their principals of the above prohibitions, as applicable, and the possible penalties and other consequences of any violation thereof.

PENALTIES FOR VIOLATIONS

Contributions or solicitations of contributions made in violation of the above prohibitions may result in the following civil and criminal penalties:

Civil penalties—Up to $2,000 or twice the amount of the prohibited contribution, whichever is greater, against a principal or a contractor. Any state contractor or prospective state contractor which fails to make reasonable efforts to comply with the provisions requiring notice to its principals of these prohibitions and the possible consequences of their violations may also be subject to civil penalties of up to $2,000 or twice the amount of the prohibited contributions made by their principals.

Criminal penalties—Any knowing and willful violation of the prohibition is a Class D felony, which may subject the violator to imprisonment of not more than 5 years, or not more than $5,000 in fines, or both.

CONTRACT CONSEQUENCES

In the case of a state contractor, contributions made or solicited in violation of the above prohibitions may resulting the contract being voided.

In the case of a prospective state contractor, contributions made or solicited in violation of the above prohibitions shall result in the contract described in the state contract solicitation not being awarded to the prospective state contractor, unless the State Elections Enforcement Commission determines that mitigating circumstances exist concerning such violation.

The State shall not award any other state contract to anyone found in violation of the above prohibitions for a period of one year after the election for which such contribution is made or solicited, unless the State Elections Enforcement Commission determines that mitigating circumstances exist concerning such violation.

SEEC FORM 10

CONNECTICUT STATE ELECTIONS ENFORCEMENT COMMISSION
Rev. 1/11

DEFINITIONS

"State contractor" means a person, business entity or nonprofit organization that enters into a state contract. Such person, business entity or nonprofit organization shall be deemed to be a state contractor until December thirty-first of the year in which such contract terminates. "State contractor" does not include a municipality or any other political subdivision of the state, including any entities or associations duly created by the municipality or political subdivision exclusively amongst themselves to further any purpose authorized by statute or charter, or an employee in the executive or legislative branch of state government or a quasi-public agency, whether in the classified or unclassified service and full or part-time, and only in such person's capacity as a state or quasi-public agency employee.

"Prospective state contractor" means a person, business entity or nonprofit organization that (i) submits a response to a state contract solicitation by the state, a state agency or a quasi-public agency, or a proposal in response to a request for proposals by the state, a state agency or a quasi-public agency, until the contract has been entered into, or (ii) holds a valid prequalification certificate issued by the Commissioner of Administrative Services under section 4a-100. "Prospective state contractor" does not include a municipality or any other political subdivision of the state, including any entities or associations duly created by the municipality or political subdivision exclusively amongst themselves to further any purpose authorized by statute or charter, or an employee in the executive or legislative branch of state government or a quasi-public agency, whether in the classified or unclassified service and full or part-time, and only in such person's capacity as a state or quasi-public agency employee.

"Principal of a state contractor or prospective state contractor" means (i) any individual who is a member of the board of directors of, or has an ownership interest of five per cent or more in, a state contractor or prospective state contractor, which is a business entity, except for an individual who is a member of the board of directors of a nonprofit organization**,** (ii) an individual who is employed by a state contractor or prospective state contractor, which is a business entity, as president, treasurer or executive vice president, (iii) an individual who is the chief executive officer of a state contractor or prospective state contractor, which is not a business entity, or if a state contractor or prospective state contractor has no such officer, then the officer who duly possesses comparable powers and duties, (iv) an officer or an employee of any state contractor or prospective state contractor who has *managerial or discretionary responsibilities with respect to a state contract,* (v) the spouse or a *dependent child* who is eighteen years of age or older of an individual described in this subparagraph, or (vi) a political committee established or controlled by an individual described in this subparagraph or the business entity or nonprofit organization that is the state contractor or prospective state contractor.

"State contract" means an agreement or contract with the state or any state agency or any quasi-public agency, let through a procurement process or otherwise, having a value of fifty thousand dollars or more, or a combination or series of such agreements or contracts having a value of one hundred thousand dollars or more in a calendar year, for (i) the rendition of services, (ii) the furnishing of any goods, material, supplies, equipment or any items of any kind, (iii) the construction, alteration or repair of any public building or public work, (iv) the acquisition, sale or lease of any land or building, (v) a licensing arrangement, or (vi) a grant, loan or loan guarantee. "State contract" does not include any agreement or contract with the state, any state agency or any quasi-public agency that is exclusively federally funded, an education loan, a loan to an individual for other than commercial purposes or any agreement or contract between the state or any state agency and the United States Department of the Navy or the United States Department of Defense.

"State contract solicitation" means a request by a state agency or quasi-public agency, in whatever form issued, including, but not limited to, an invitation to bid, request for proposals, request for information or request for quotes, inviting bids, quotes or other types of submittals, through a competitive procurement process or another process authorized by law waiving competitive procurement.

"Managerial or discretionary responsibilities with respect to a state contract" means having direct, extensive and substantive responsibilities with respect to the negotiation of the state contract and not peripheral, clerical or ministerial responsibilities.

"Dependent child" means a child residing in an individual's household who may legally be claimed as a dependent on the federal income tax of such individual.

"Solicit" means (A) requesting that a contribution be made, (B) participating in any fund-raising activities for a candidate committee, exploratory committee, political committee or party committee, including, but not limited to, forwarding tickets to potential contributors, receiving contributions for transmission to any such committee or bundling contributions, (C) serving as chairperson, treasurer or deputy treasurer of any such committee, or (D) establishing a political committee for the sole purpose of soliciting or receiving contributions for any committee. Solicit does not include: (i) making a contribution that is otherwise permitted by Chapter 155 of the Connecticut General Statutes; (ii) informing any person of a position taken by a candidate for public office or a public official, (iii) notifying the person of any activities of, or contact information for, any candidate for public office; or (iv) serving as a member in any party committee or as an officer of such committee that is not otherwise prohibited in this section.

"Subcontractor" means any person, business entity or nonprofit organization that contracts to perform part or all of the obligations of a state contractor's state contract. Such person, business entity or nonprofit organization shall be deemed to be a subcontractor until December thirty first of the year in which the subcontract terminates. "Subcontractor" does not include (i) a municipality or any other political subdivision of the state, including any entities or associations duly created by the municipality or political subdivision exclusively amongst themselves to further any purpose authorized by statute or charter, or (ii) an employee in the executive or legislative branch of state government or a quasi-public agency, whether in the classified or unclassified service and full or part-time, and only in such person's capacity as a state or quasi-public agency employee.

"Principal of a subcontractor" means (i) any individual who is a member of the board of directors of, or has an ownership interest of five per cent or more in, a subcontractor, which is a business entity, except for an individual who is a member of the board of directors of a nonprofit organization, (ii) an individual who is employed by a subcontractor, which is a business entity, as president, treasurer or executive vice president, (iii) an individual who is the chief executive officer of a subcontractor, which is not a business entity, or if a subcontractor has no such officer, then the officer who duly possesses comparable powers and duties, (iv) an officer or an employee of any subcontractor who has managerial or discretionary responsibilities with respect to a subcontract with a state contractor, (v) the spouse or a dependent child who is eighteen years of age or older of an individual described in this subparagraph, or (vi) a political committee established or controlled by an individual described in this subparagraph or the business entity or nonprofit organization that is the subcontractor.

SEEC FORM 10

CONNECTICUT STATE ELECTIONS ENFORCEMENT COMMISSION
Rev. 1/11

ACKNOWLEDGEMENT OF RECEIPT

SIGNATURE

DATE (mm/dd/yyyy)

NAME OF SIGNER

First Name	MI	Last Name	Suffix

TITLE

COMPANY NAME

Additional information may be found on the website of the State Elections Enforcement Commission,
www.ct.gov/seec
Click on the link to "Lobbyist/Contractor Limitations"

Margaret Gilbert
Buyer

860-679-1988
Telephone Number

mgilbert@adp.uchc.edu
E-mail Address

860-284-5873
Fax Number

STATE OF CONNECTICUT

UNIVERSITY OF CONNECTICUT HEALTH CENTER
Procurement Operations & Contracts
263 Farmington Avenue, MC4036
Farmington, CT 06032-4036

ITB NUMBER:	BID DUE DATE:	BID DUE TIME:
UCHC4-39705749	July 3, 2013	2:30 pm EST

ITB TITLE: **Supply and Install Spencer Turbine Equipment UCHC Dental School**

In an effort to streamline the bidding & contracting process, the University of Connecticut Health Center is now accepting certain documents electronically via the State of Connecticut DAS Business Network (BizNet). The chart below identifies which documents are required during the bid and contract process. **The green highlighted row displays the documents that are required prior to submission of your proposal.**

WHEN TO UPLOAD ON BIZNET	REQUIRED OPM ETHICS FORMS & NON-DISCRIMINATION CERTIFICATION TO BE SIGNED BY CONTRACTOR		
	ALL Contracts ***regardless of*** cost or value	ALL Contracts cost or value ***$50,000 or more***	LARGE Contracts cost ***$500,000 or more***
Prior to bid/proposal submission	Non-Discrimination Certification	OPM Ethics Form 5	OPM Ethics Form 6
At time of contract execution	Non-Discrimination Certification	OPM Ethics Form 1	
After contract execution, no later than 15 days after the request of such agency, institution or quasi-public agency for such affirmation from subcontractors & consultants when applicable.			OPM Ethics Form 6
No later than 14 days **after** the twelve-month anniversary of the most recently filed and/or updated representation or documentation	Non-Discrimination Certification	OPM Ethics Form 1	
No later than 30 days **after** the effective date of such change to the most recently filed document.	Non-Discrimination Certification	OPM Ethics Form 1 OPM Ethics Form 5	OPM Ethics Form 6

Only the following affidavit and certification forms may be uploaded on BizNet:

- OPM Ethics Form 1 – Gift & Campaign Contribution Certification
- OPM Ethics Form 5 – Consulting Agreement Affidavit
- OPM Ethics Form 6 – Affirmation of Receipt of State Ethics Laws Summary
- Non-discrimination Certification Form A – Representation by Individual (Regardless of Value)
- Non-discrimination Certification Form B – Representation by Entity (Valued at $50,000 or less)
- Non-discrimination Certification Form C – Affidavit by Entity (Valued at $50,000 or more)
- Non-discrimination Certification Form D – New Resolution by Entity
- Non-discrimination Certification Form E – Prior Resolution by Entity

Instead of submitting these documents in hard copy every time you submit a bid/proposal or sign a contract with the State of Connecticut, you can upload them electronically and have them made available to all State of Connecticut Agencies. Documents must only be updated on a yearly basis, or if any changes to the submitted information occur.

Prior to uploading forms onto the BizNet system, companies are required to setup a profile on BizNet at the following website: https://www.biznet.ct.gov/AccountMaint/Login.aspx. For instructions on how to upload the documents visit the following website: http://das.ct.gov/images/1090/Upload%20Instructions.pdf. If you are certified through the State of CT Supplier Diversity or the Pre-Qualification Program, you have already created a BizNet account.

To obtain a copy of OPM Ethics Forms and for information on which form to complete, please access the State of CT Office of Policy & Management's website at: http://www.ct.gov/opm/cwp/view.asp?a=2982&q=386038.

To obtain a copy of Non-discrimination Certification Forms and for information on which form to complete, please access the State of CT Office of Policy & Management's website at: http://www.ct.gov/opm/cwp/view.asp?a=2982&q=390928&opmNav_GID=1806.

FORM A, B OR C – NON-DISCRIMINATION CERTIFICATION

I _____ being a duly authorized representative of _____
NAME OF AUTHORIZED PERSON *COMPLETE LEGAL BUSINESS NAME*

hereby certifies that I/We have signed and completed the required Non-discrimination Certification and uploaded it on BizNet.

Name of Authorized Representative	Title of Authorized Representative
Signature	Date

OPM ETHICS FORM 5 – CONSULTING AGREEMENT AFFIDAVIT

I _____ being a duly authorized representative of _____
NAME OF AUTHORIZED PERSON *COMPLETE LEGAL BUSINESS NAME*

hereby certifies that I/We have signed and completed the required OPM Ethics Form 5 and uploaded it on BizNet.

Name of Authorized Representative	Title of Authorized Representative
Signature	Date

OPM ETHICS FORM 6 – AFFIRMATION OF RECEIPT OF STATE ETHICS LAWS SUMMARY ***(only if applicable)***

I _____ being a duly authorized representative of _____
NAME OF AUTHORIZED PERSON *COMPLETE LEGAL BUSINESS NAME*

hereby certifies that I/We have signed and completed the required OPM Ethics Form 6 and uploaded it on BizNet.

Name of Authorized Representative	Title of Authorized Representative
Signature	Date

Margaret Gilbert
Buyer

860-679-1988
Telephone Number

mgilbert@adp.uchc.edu
E-mail Address

860-284-5873
Fax Number

STATE OF CONNECTICUT

UNIVERSITY OF CONNECTICUT HEALTH CENTER
Procurement Operations & Contracts
263 Farmington Avenue, MC4036
Farmington, CT 06032-4036

ITB NUMBER:	BID DUE DATE:	BID DUE TIME:
UCHC4-39705749	July 3, 2013	2:30 pm EST

ITB TITLE: Supply and Install Spencer Turbine Equipment UCHC Dental School

The following Terms and Conditions govern all Requests for Bids issued by the University of Connecticut Health Center ("UCHC"). Incorporated by reference into these Terms and Conditions are applicable provisions of the Connecticut General Statutes, including but not limited to, those in Title 4a, Chapter 58; Title 10a, Chapter 185b, Sections 10a-151a and 10a-151b; and applicable provisions of the Regulations of Connecticut State Agencies, including but not limited to, those that begin with and follow Section 4a-52-1.

Bidders shall comply with the statutes and regulations as they exist on the date of their Bid and as they may be adopted or amended from time to time.

Submission of Bids

1. Bids must be submitted to and received and stamped physically or electronically as received by UCHC Procurement Operations & Contracts on such forms as UCHC may make available. Telephone or facsimile Bids will not be accepted in response to a Request for Bids ("ITB").

2. The time and date Bids are due is given in each ITB. Bids received after the specified due date and time given in each ITB shall not be considered and shall be returned unopened. ITB envelopes must clearly indicate the ITB number as well as the date and time that the Bid is due. The name and address of the Bidder should appear in the upper left hand corner of the envelope.

3. Incomplete ITB forms may result in the rejection of Bids. Amendments to Bids received by UCHC after the due date and time specified shall not be considered. Bids shall be computer prepared, typewritten or handwritten in ink. Bids submitted in pencil shall be rejected. All Bids shall be signed by a person duly authorized to sign Bids on behalf of the Bidder. Unsigned Bids may be rejected at UCHC's sole discretion. Errors, alterations or corrections on both the original and any copies of the price schedule to be returned must be initialed by the person signing the Bid or their authorized designee. If an authorized designee initials the correction, there must be written authorization from the person signing the Bid to the person initialing the erasure, alterations, or correction. Failure to do so shall result in rejection of the Bid for those items erased, altered or corrected and not appropriately initialed.

4. Conditional Bids are subject to rejection in whole or in part. A conditional Bid is one which limits, modifies, expands or supplements any of the terms conditions and/or specifications of the ITB, including the terms & conditions of the sample standard contract attached hereto.

5. Alternate Bids will not be considered. An alternate Bid is defined as one which is submitted in addition to the Bidder's primary response to the ITB.

6. In the event of a discrepancy between the unit price and the extension, the unit price shall govern. Prices should be extended in decimal, not fraction. Prices are to be net, and shall include transportation and delivery charges fully prepaid by the Bidder to the destination specified in the Bid, and subject only to cash discount.

7. Pursuant to Section 12-412 of the Connecticut General Statutes, the State of Connecticut is exempt from the payment of excise, transportation and sales taxes imposed by the Federal Government and/or the State. Such taxes must be excluded from Bid prices.

8. All Bids are subject to public inspection after the execution of the contract.

9. The successful Bidder shall be bound by the terms and conditions of the form contract that is attached to the ITB, or such terms as are modified by formal agreement of the parties.

10. By its submission, the Bidder represents that the Bid is not made in connection with any other Bidder submitting a Bid for the same commodity or commodities and is in all respects fair and without collusion or fraud.

Conformity and Completeness of Bids

11. To be considered acceptable, Bids must be complete and conform to all ITB instructions and conditions. UCHC, at its discretion, may reject in whole or in part any Bid if in its judgment the best interests of UCHC will be served by doing so.

Independent Price Determination

12. In the Bids, Bidders must warrant, represent, and certify that the following requirements have been met in connection with this ITB:

    a. The costs proposed have been arrived at independently, without consultation, communication, or agreement for the purpose of restricting competition as to any matter relating to such process with any other organization or with any competitor.

    b. Unless otherwise required by law, the costs quoted have not been knowingly disclosed by the Bidder on a prior basis directly or indirectly to any other.

    c. No attempt has been made, or will be made, by the Bidder to induce any other person or firm to submit or not to submit a Bid for the purpose of restricting competition.

Stability of Proposed Prices

13. Any price offerings from Bidders must be valid for a period of 180 days from the due date of the Bid at UCHC's sole discretion.

Amendment or Cancellation

14. UCHC reserves the rights to cancel, amend, modify or otherwise change this ITB at any time if it deems it to be in the best interest of UCHC to do so.

Bid Modifications

15. No additions or changes to any Bid will be allowed after the Bid due date, unless such modification is specifically requested by UCHC. UCHC, at its option, may seek Bidder retraction and/or clarification of any discrepancy or contradiction found during its review of Bids.

Bidder Presentation of Supporting Evidence

16. Bidders must be prepared to provide any evidence of experience, performance, ability, and/or financial surety that UCHC deems to be necessary or appropriate to fully establish the performance capabilities represented in their Bids.

Bid Expenses

17. Bidders are responsible for all costs and expenses incurred in the preparation of Bids and for any subsequent work on the Bid that is required by UCHC.

Ownership of Bids

18. All Bids shall become the sole property of UCHC and will not be returned.

Ownership of Subsequent Products

19. Any product, whether acceptable or unacceptable, developed under a contract awarded as a result of this ITB shall be the sole property of UCHC unless otherwise stated in the contract.

Samples

20. The quality of accepted samples does not supersede the specifications for quality in the ITB unless the sample is superior in quality. All deliveries shall have at least the same quality as the accepted sample.

21. Samples shall be furnished free of charge. Bidders must indicate if return of any sample is desired. UCHC shall comply with such request provided samples are returned at Bidder's sole cost and expense, DAP Bidder's destination, and that they have not been made useless by testing. If they are made useless by testing, the State may dispose of the samples as it deems to be appropriate. Samples may be held for comparison with deliveries.

Guaranty or Surety

22. Bid and/or performance bonds may be required. Bonds must meet the following requirements: Corporation - must be signed by an official of the corporation above their official title and the corporate seal must be affixed over the signature; Firm or Partnership - must be signed by all the partners and indicate they are "doing business as"; Individual - must be signed by the owner and indicated as "Owner". The surety company executing the bond or countersigning must be licensed in Connecticut and the bond must be signed by an official of the surety company with the corporate seal affixed over their signature. Signatures of two witnesses for both the principal and the surety must appear on the bond. Power of attorney for the official signing the bond for the surety company must be submitted with the bond.

Award

23. A contract will be awarded (subject to the conditions of Section 29, below) to the Bidder or Bidders whose Bids UCHC deems to be the most advantageous to the State, in accordance with the criteria set forth within the ITB, taking into account the quality of the goods or services to be supplied, their conformance with specifications, delivery terms, price, administrative costs, past performance, and financial responsibility.

24. UCHC may reject the Bid of any Bidder who is in default of any prior contract or is guilty of misrepresentation or any Bidder with a member of its firm in default or guilty of misrepresentation.

25. UCHC may, in accordance with and pursuant to the Regulations of Connecticut State Agencies may correct inaccurate awards resulting from clerical or administrative errors.

26. UCHC reserves the right to make an award to multiple Suppliers.

27. Bidder has ten days after notice of award to refuse acceptance of the award; at UCHC's sole discretion, after ten days the award may be binding on the Bidder. If the Bidder refuses acceptance of the award within the ten-day period, the award will be made to the next Bidder or Bidders whose Bid(s) UCHC deems to be the most advantageous to the State, in accordance with the criteria set forth in the ITB.

28. UCHC reserves the right to correct inaccurate awards. This may include, in extreme circumstances, revoking the award of a contract already made to a Bidder and subsequently awarding the contract to another Bidder. Such action on the part of UCHC shall not constitute a breach of contract on the part of UCHC since the contract with the initial Bidder is deemed to be void and of no effect as if no contract ever existed between UCHC and such Bidder.

29. The award will be contingent upon the successful Bidder's acceptance of all of the required terms and conditions in UCHC's standard contract and execution of the applicable required State of Connecticut certifications and affidavits. A sample standard contract and samples of the required forms are attached hereto.

30. UCHC's Affirmative Action, Non-Discrimination and Equal Opportunity Policy are set forth in UCHC Policy Number 2002-44. UCHC will not knowingly do business with any bidder, contractor, subcontractor or supplier of materials who discriminates against members of any class protected under Sections 4a-60 or 4a-60a of the Connecticut General Statues.

Compliance

31. All purchases will be in compliance with any applicable federal laws and the laws of the State of Connecticut. Specifically and without limiting the foregoing, this Bid is subject to the provisions of the following Statutes and Executive Orders:

    a. Connecticut General Statutes Sec. 22a-194. Definition of controlled substance. As used in sections 22a-194a to 22a-194g, inclusive, "controlled substance" means a controlled substance under Annex A, Group 1 of the Montreal Protocol on Substances that Deplete the Ozone Layer, signed September 16, 1987, as may be amended.

    b. For all State contracts as defined in Public Act

10-1 having a value in a calendar year of $50,000 or more or a combination or series of such agreements or contracts having a value of $100,000 or more, the authorized signatory to this Agreement expressly acknowledges receipt of the State Elections Enforcement Commission's notice advising state contractors of state campaign contribution and solicitation prohibitions, and will inform its principals of the contents of the notice as enclosed.

c. Executive Order No. Three of Governor Thomas J. Meskill promulgated June 16, 1971 requires nondiscrimination clauses in state contracts.

d. Executive Order No. Seventeen of Governor Thomas J. Meskill promulgated February 15, 1973 requires contractors and subcontractors having a contract with the state or any business entity having business with the state or which seeks to do business with the state, and every bidder or prospective bidder who submits a bid or replies to an Request for Bid on any state contract shall list all employment openings with the office of the Connecticut State Employment Service.

e. Executive Order No. Sixteen of Governor John G. Rowland promulgated August 4, 1999 regarding Violence in the Workplace Prevention Policy.

f. Executive Order No. Fourteen of Governor M. Jodi Rell promulgated April 17, 2006 states that contractors shall use cleaning and/or sanitizing products having properties that minimize potential impacts on human health and the environment, consistent with maintaining clean and sanitary facilities.

g. Executive Order No. 7C of Governor M. Jodi Rell promulgated July 13, 2006 establishes the State Contracting Standards Board to address the state's vulnerabilities in the selection and procurement processes to avoid improprieties, favoritism, unfair practices or ethical lapses in state contracting.

John Dempsey Hospital Policies and Procedures

32. Bidder will comply with John Dempsey Hospital policies and procedures, as well as all applicable laws, ordinances, rules regulations, standards, and orders of governmental, regulatory and accrediting bodies, including but not limited to the Joint Commission, having jurisdiction in the premises that are applicable to health care organizations and programs.

State Fiscal and Product Performance Requirements

33. Any product or services acquisition resulting from this ITB must be contingent upon contractual provisions for cancellation of such acquisition, without penalty, if the applicable funds are not available for required payment or if the product or services fail to meet the minimum State criteria for acceptance or performance reliability.

Validation of Bids

34. Each Bid shall be a binding commitment which UCHC may incorporate, by reference or otherwise, into any contract with that Bidder. The Bids must provide the names, titles, addresses and telephone numbers of those individuals with authority to negotiate a contract with UCHC and contractually bind the Bidder. The Bid must also include evidence that is has been duly delivered on the part of the Bidder, that the persons submitting the Bid have the requisite corporate power and authority to structure, compile, draft, submit and deliver the Bid and subsequently to enter into, execute, deliver and perform on behalf of the Bidder any contract contemplated in this ITB.

Oral Agreement or Arrangements

35. Any alleged oral agreements or arrangements made by Bidders with UCHC employees will be disregarded in any UCHC Bid evaluation or associated award.

Offer of Gratuities/Conflict of Interest

36. The Bidder warrants, represents, and certifies that no elected or appointed official or employee of the State of Connecticut has or will benefit financially or materially from this procurement. Should the Bidder become aware of a potential conflict of interest, UCHC shall be notified immediately. Any contract and/or award arising from this ITB may be terminated by UCHC if it is determined that gratuities of any kind were either offered to, or received by, any of the aforementioned officials or employees from the Bidder or the Bidder's agent(s), representative(s) or employee(s).
37.

Subletting or Assigning of Contract

38. UCHC must approve any and all subcontractors utilized by the successful Bidder prior to any such subcontractor commencing any work. Bidders acknowledge by the act of submitting a Bid that any work to be provided under the contract is work conducted on behalf of UCHC and that the Assistant Director of Procurement or his designee may communicate directly with any subcontractor as UCHC deems to be necessary or appropriate. It is also understood that the successful Bidder shall be responsible for all payment of fees charged by the subcontractor(s). A performance evaluation of any subcontractor shall be provided promptly by the successful Bidder to UCHC upon request. The successful Bidder must provide the majority of services described in the specifications.

39. A contract award or contract resulting from the ITB solicitation may not be assigned by the Bidder without the express written permission of UCHC.

Freedom of Information

40. Due regard will be given for the protection of proprietary or confidential information contained in all Bids received. However, Bidders should be aware that all materials associated with the procurement are subject to the terms of the Connecticut Freedom of Information Act (FOIA) and all rules, regulations and interpretations resulting there from. It will not be sufficient for Bidders to merely state generally that the Bid is proprietary or confidential in nature and not, therefore, subject to release to third parties. Those particular sentences, paragraphs, pages or sections which a Bidder believes to be exempt from disclosure under the FOIA must be specifically identified as such. Convincing explanation and rationale sufficient to justify each exemption consistent with Section 1-210 of the FOIA must accompany the Bid. The rationale and explanation must be stated in terms of the prospective harm to the competitive position of the Bidder that would result if the identified material were to be released and the reasons why the materials are legally exempt from release pursuant to the above- cited statute. In no event shall UCHC have any liability for the disclosure of any documents or information in its possession which UCHC believes are required to be disclosed pursuant to FOIA or other requirements of law.

Execution of Contract and Required State of Connecticut Forms

41. This ITB is not a contract and, alone, shall not be interpreted as such. Rather, this ITB serves as the instrument through which Bids are solicited. Once the evaluation of the Bids is complete and a Bidder(s) is selected, the elected Bid(s) and this ITB may then serve as the basis for a contract that will be negotiated and executed between UCHC and the selected Bidder(s). This ITB and the Bid may be attached to the contract as exhibits. If for some reason, UCHC and the initial Bidder selected fail to reach consensus on the issues relative to the contract, UCHC may commence contract negotiations with other Bidders. UCHC may decide at any time to start the ITB process again.

42. A sample of UCHC's standard contract and samples of the required State of Connecticut certifications and affidavits are attached to this ITB. By submitting a Bid, the Bidder acknowledges that it has read all of the attached documents, and that it understands that the successful Bidder(s) will be expected to sign the standard contract and all of the applicable required forms. Refusal to do so may result in the contract being awarded to the next Bidder or Bidders whose Bid(s) UCHC deems to be the most advantageous to the State, in accordance with the criteria set forth in the ITB.

43. Section 4a-81 of the Connecticut General Statutes (the "Act") requires that this solicitation include a notice of the consulting affidavit requirements described in the Act. Accordingly, pursuant to the Act, Suppliers are notified as follows: (a) No state agency shall execute a contract for the purchase of goods or services, which contract has a total value to the state of fifty thousand dollars or more in any calendar or fiscal year, unless the state agency obtains the written affidavit described in subsection (b) of this section. (b) (1) The chief official of the Supplier awarded a contract described in subsection (a) of this section or the individual awarded such contract who is authorized to execute such contract, shall attest in an affidavit as to whether any consulting agreement has been entered into in connection with such contract. Such affidavit shall be required if any duties of the consultant included communications concerning business of such state agency, whether or not direct contact with a state agency, state or public official or state employee was expected or made. "Consulting agreement" means any written or oral agreement to retain the services, for a fee, of a consultant for the purposes of (A) providing counsel to a contractor, Supplier, consultant or other entity seeking to conduct, or conducting, business with

the State, (B) contacting, whether in writing or orally, any executive, judicial, or administrative office of the state, including any department, institution, bureau, board, commission, authority, official or employee for the purpose of solicitation, dispute resolution, introduction or requests for information or (C) any other similar activity related to such contract. "Consulting agreement" does not include any agreements entered into with a consultant who is registered under the provisions of Chapter 10 of the Connecticut General Statutes concerning the State's Codes of Ethics, as of the date such affidavit is submitted. (2) Such affidavit shall be sworn as true to the best knowledge and belief of the person signing the certification on the affidavit and shall be subject to the penalties of false statement. (3) Such affidavit shall include the name of the consultant, the consultant's firm, the basic terms of the consulting agreement, a brief description of the services provided, and an indication as to whether the consultant is a former state employee or public official. If the consultant is a former state employee or public official, such affidavit shall indicate his or her former agency and the date such employment terminated. (4) Such affidavit shall be amended whenever the Supplier awarded the contract enters into any new consulting agreement during the term of the contract. (c) If a Supplier refuses to submit the affidavit required under subsection (b) of this section, then the state agency shall not award the Contract to such Supplier and shall award the contract to the next highest ranked Supplier or the next lowest responsible qualified bidder or seek new bids or Bids.

44. Section 4-252 of the Connecticut General Statutes (the "Statute") requires that the ITB, of which these terms and conditions are a part, include a notice of the Supplier certification requirements described in the Statute. Accordingly, pursuant to the Statute, Suppliers are notified as follows: (a) The terms "gift," "quasi-public agency," "state agency," "large state contract," "principals and key personnel" and "participated substantially" as used in this section shall have the meanings set forth in the Statute. (b) No state agency or quasi-public agency shall execute a large state contract unless the state agency or quasi-public agency obtains the written certifications described in this section. Each such certification shall be sworn as true to the best knowledge and belief of the person signing the certification, subject to the penalties of false statement. (c) The official of the person, firm or corporation awarded the contract, who is authorized to execute the contract, shall certify on such forms as the State shall provide: (1) That no gifts were made between the date that the state agency or quasi-public agency began planning the project, services, procurement, and lease or licensing arrangement covered by the contract and the date of execution of the contract, by (A) such person, firm, corporation, (B) any principals and key personnel of the person, firm or corporation, who participated substantially in preparing the bid or Bid or the negotiation of the contract, or (C) any agent of such person, firm, corporation or principals and key personnel, who participated substantially in preparing the bid or Bid or the negotiation of the contract, to (i) any public official or state employee of the state agency or quasi-public agency soliciting bids or Bids for the contract, who participated substantially in the preparation of the bid solicitation or request for Bids for the contract or the negotiation or award of the contract, or (ii) any public official or state employee of any other state agency, who has supervisory or appointing authority over such state agency or quasi-public agency; (2) That no such principals and key personnel of the person, firm or corporation, or agent of such person, firm or corporation or principals and key personnel, knows of any action by the person, firm or corporation to circumvent such prohibition on gifts by providing for any other principals and key personnel, official, employee or agent of the person, firm or corporation to provide a gift to any such public official or state employee; and (3) That the person, firm or corporation made the bid or Bid without fraud or collusion with any person. (d) Any bidder or Bidder that does not make the certifications required under subsection (c) of this section shall be disqualified and the state agency or quasi-public agency shall award the contract to the next highest ranked Bidder or the next lowest responsible qualified bidder or seek new bids or Bids. (e) The date that the state agency or quasi-public agency began planning the project, services procurement, lease or licensing arrangement to be covered by the contract is defined as the ITB release date.

45. With regard to a State contract as defined in Public Act 10-1 having a value in a calendar year of $50,000 or more or a combination or series of such agreements or contracts having a value of $100,000 or more, the authorized signatory to this submission in response to the State's solicitation expressly acknowledges receipt of ITB-05 Form, which is the State Elections Enforcement Commission's notice advising prospective state contractors of state campaign contribution and solicitation prohibitions, and will inform its principals of the contents of the notice.

46. Sections 46a-60 and 46a-81c of the Connecticut General Statutes prohibit discrimination in employment based on an individual's race, color, religious creed, age, sex, marital status, civil union status, sexual orientation, national origin, ancestry, present or past history of mental disability, mental retardation, learning disability or physical disability, including, but not limited to, blindness. Sections 4a-60 and 4a-60a of the Connecticut General Statutes require State contractors to adopt policies in support of Connecticut's non-discrimination laws by means of a resolution of the board of directors, shareholders, managers, members or other governing body of such contractor. Attached to this ITB is a sample Non-Discrimination Certification form. The Bidder's submission in response to this ITB is an acknowledgment that the successful Bidder will be required to execute and return the Non-Discrimination Certification at the time that the contract is executed. The execution and submittal of this Non-Discrimination Certification is a condition precedent to the State's execution of the contract, unless the contractor is exempt from this statutory requirement, in which case the contractor must obtain a written waiver from the State's Commission on Human Rights and Opportunities.

47. The existence of the contract shall be determined in accordance with the requirements set forth above. However, the award of the contract is not an order to ship. Contractors may not begin to perform under the awarded contract until the Contractor and the State have executed the contract and thereafter the Contractor receives a written purchase order from an appropriate State entity.

Payments under a Contract Award

48. Under no circumstances shall the successful Bidder begin to perform under the contract prior to the effective date of the contract. All payments shall adhere to the payment terms negotiated in the contract award.

Evaluation of Performance

49. During or after the term of any contract or other agreement that results from this process, UCHC may conduct evaluations of the winning Bidder's performance including, but not limited to clinical equipment, supplies and services. The winning Bidder may be requested to provide a quality performance metrics and shall cooperate with UCHC in any such evaluations and work with UCHC to correct any deficiencies noted.

Margaret Gilbert
Buyer

860-679-1988
Telephone Number

mgilbert@adp.uchc.edu
E-mail Address

860-284-5873
Fax Number

STATE OF CONNECTICUT

UNIVERSITY OF CONNECTICUT HEALTH CENTER
Procurement Operations & Contracts
263 Farmington Avenue, MC4036
Farmington, CT 06032-4036

ITB NUMBER:	BID DUE DATE:	BID DUE TIME:
UCHC4-39705749	July 3, 2013	2:30 pm EST
ITB TITLE: Supply and Install Spencer Turbine Equipment UCHC Dental School		

NOTE: This form will be used in assessing a Bidder's qualifications and to determine if the ITB submitted is from a responsible Bidder. Factors such as past performance, integrity of the Bidder, conformity to the specifications, etc. will be used in evaluating bids.

Name of Firm/Corporation: _____

Please answer the following:

1. How long has the above Firm/Corporation been engaged in business under this name? ____ Years ____ Months

2. List any aliases for your Firm/Corporation:

   _____ _____

   _____ _____

3. How many employees does your Firm/Corporation have? _____ Full-Time _____ Part-Time

Please check one of the following boxes:

1. If requested, would your Firm/Corporation provide a "good standing" certificate issued by the CT Secretary of State?

   ☐ Yes ☐ No

2. If requested, would your Firm/Corporation provide a most recent copy of your financial statement?

   ☐ Yes ☐ No

Please answer the following:

1. List below any contracts awarded to your Firm/Corporation within the last three (3) years by either a private company or a federal, state or local government agency. If applicable, indicate which State of Connecticut agency and provide the contract name, contract number, and the name of the person administering the contract. *(Attach additional sheets, if necessary)*

Company Name:	_____	Company Name:	_____
Contact Name:	_____	Contact Name:	_____
Telephone No.:	_____	Telephone No.:	_____
Contract No.:	_____	Contract No.:	_____
Effective Dates:	_____	Effective Dates:	_____
Company Name:	_____	Company Name:	_____
Contact Name:	_____	Contact Name:	_____
Telephone No.:	_____	Telephone No.:	_____
Contract No.:	_____	Contract No.:	_____
Effective Dates:	_____	Effective Dates:	_____

2. List any criminal convictions against your Firm/Corporation and any of your officers, principal shareholders, directors, partners, LLC members or LLC managers: *(Attach additional sheets, if necessary)*

_____ _____

_____ _____

3. List any administrative actions either pending review by the State of Connecticut or determinations that the State of Connecticut made within the last three (3) years regarding your Firm/Corporation or any of your officers, principal shareholders, directors, partners, LLC members or LLC managers. This would include court judgments, actions, suits, claims, demands, investigations and legal, administrative or arbitration proceedings pending in any forum. *(Attach additional sheets, if necessary)*

_____ _____

_____ _____

I hereby certify under penalty of false statement that all the information supplied is complete and true.

_____
Signature of person authorized to sign on behalf of the above Firm/Corporation

_____ _____
Name of authorized person Title of authorized person

_____
Date

Margaret Gilbert
Buyer

860-679-1988
Telephone Number

mgilbert@adp.uchc.edu
E-mail Address

860-284-5873
Fax Number

STATE OF CONNECTICUT

UNIVERSITY OF CONNECTICUT HEALTH CENTER
Procurement Operations & Contracts
263 Farmington Avenue, MC4036
Farmington, CT 06032-4036

ITB NUMBER:	BID DUE DATE:	BID DUE TIME:
UCHC4-39705749	July 3, 2013	2:30 pm EST
ITB TITLE: Supply and Install Spencer Turbine Equipment UCHC Dental School		

NOTE: Due to the State of Connecticut contracting requirements the following information must be completed for contract planning purposes.

Name of Firm/Corporation: _____

Please check one of the following boxes:

1. Does your Firm/Corporation have a Board of Directors (BOD) or other Management Group?

   ☐ Yes ☐ No

2. If so, how often does the BOD/Management Group meet?

   ☐ Monthly ☐ Semi-monthly ☐ Quarterly ☐ Annually ☐ Bi-annual ☐ Other

Please answer the following:

1. Indicate below the next four (4) Board of Directors/Management Group Meeting Dates:

   _____ _____

   _____ _____

Margaret Gilbert
Buyer

860-679-1988
Telephone Number

mgilbert@adp.uchc.edu
E-mail Address

860-284-5873
Fax Number

STATE OF CONNECTICUT

UNIVERSITY OF CONNECTICUT HEALTH CENTER
Procurement Operations & Contracts
263 Farmington Avenue, MC4036
Farmington, CT 06032-4036

ITB NUMBER:	BID DUE DATE:	BID DUE TIME:
UCHC4-39705749	July 3, 2013	2:30 pm EST

ITB TITLE: **Supply and Install Spencer Turbine Equipment UCHC Dental School**

UNIVERSITY OF CONNECTICUT HEALTH CENTER BUSINESS ASSOCIATE AGREEMENT

Health Insurance Portability and Accountability Act of 1996 ("HIPAA")

(a) If the Contractor is a Business Associate under the requirements of the Health Insurance Portability and Accountability Act of 1996 ("HIPAA"), the Contractor must comply with all terms and conditions of this Section of the Contract. If the Contractor is not a Business Associate under HIPAA, this Section of the Contract does not apply to the Contractor for this Contract.

(b) The Contractor is required to safeguard the use, publication and disclosure of information on all applicants for, and all clients who receive, services under the Contract in accordance with all applicable federal and state law regarding confidentiality, which includes but is not limited to HIPAA, more specifically with the Privacy and Security Rules at 45 C.F.R. part 160 and part 164, subparts A, C, and E; and

(c) The State of Connecticut Agency named on page 1 of this Contract (hereinafter the "Department") is a "covered entity" as that term is defined in 45 C.F.R. §160.103; and

(d) The Contractor, on behalf of the Department, performs functions that involve the use or disclosure of "individually identifiable health information," as that term is defined in 45 C.F.R. §160.103; and

(e) The Contractor is a "business associate" of the Department, as that term is defined in 45 C.F.R. §160.103; and

(f) The Contractor and the Department agree to the following in order to secure compliance with HIPAA, the requirements of Subtitle D of the Health Information Technology for Economic and Clinical Health Act (hereinafter the HITECH Act) (Pub. L. 111-5, sections 13400 to 13423), and more specifically with the Privacy and Security Rules at 45 C.F.R. part 160 and part 164, subparts A, C, and E.

(g) Definitions.

(1) "Breach" shall have the same meaning as the term is defined in section 13400 of the HITECH Act (42 U.S.C. §17921(1)).

(2) "Business Associate" shall mean the Contractor.

(3) "Covered Entity" shall mean the Department of the State of Connecticut named on page 1 of this Contract.

(4) "Designated Record Set" shall have the same meaning as the term "designated record set" in 45 C.F.R. §164.501.

(5) "Electronic Health Record" shall have the same meaning as the term is defined in section 13400 of the HITECH Act (42 U.S.C. §17921(5)).

(6) "Individual" shall have the same meaning as the term "individual" in 45 C.F.R. §160.103 and shall include a person who qualifies as a personal representative as defined in 45 C.F.R. §164.502(g).

(7) "Privacy Rule" shall mean the Standards for Privacy of Individually Identifiable Health Information at 45 C.F.R. part 160 and parts 164, subparts A and E.

(8) "Protected Health Information" or "PHI" shall have the same meaning as the term "protected health information" in 45 C.F.R. §160.103, limited to information created or received by the Business Associate from or on behalf of the Covered Entity.

(9) "Required by Law"' shall have the same meaning as the term "required by law" in 45 C.F.R. §164.103.

(10) "Secretary" shall mean the Secretary of the Department of Health and Human Services or his designee.

(11) "More stringent" shall have the same meaning as the term "more stringent" in 45 C.F.R. §160.202.

(12) "This Section of the Contract" refers to the HIPAA Provisions stated herein, in their entirety.

(13) "Security Incident" shall have the same meaning as the term "security incident" in 45 C.F.R. §164.304.

(14) "Security Rule" shall mean the Security Standards for the Protection of Electronic Protected Health Information at 45 C.F.R. part 160 and parts 164, subparts A and C.

(15) "Unsecured protected health information" shall have the same meaning as the term as defined in section 13402(h)(1)(A) of HITECH Act (42 U.S.C. §17932(h)(1)(A)).

(h) Obligations and Activities of Business Associates.

(1) Business Associate agrees not to use or disclose PHI other than as permitted or required by this Section of the Contract or as Required by Law.

(2) Business Associate agrees to use appropriate safeguards to prevent use or disclosure of PHI other than as provided for in this Section of the Contract.

(3) Business Associate agrees to use administrative, physical and technical safeguards that reasonably and appropriately protect the confidentiality, integrity, and availability of electronic protected health information that it creates, receives, maintains, or transmits on behalf of the Covered Entity.

(4) Business Associate agrees to mitigate, to the extent practicable, any harmful effect that is known to the Business Associate of a use or disclosure of PHI by Business Associate in violation of this Section of the Contract.

(5) Business Associate agrees to report to Covered Entity any use or disclosure of PHI not provided for by this Section of the Contract or any security incident of which it becomes aware.

(6) Business Associate agrees to insure that any agent, including a subcontractor, to whom it provides PHI received from, or created or received by Business Associate, on behalf of the Covered Entity, agrees to the same restrictions and conditions that apply through this Section of the Contract to Business Associate with respect to such information.

(7) Business Associate agrees to provide access, at the request of the Covered Entity, and in the time and manner agreed to by the parties, to PHI in a Designated Record Set, to Covered Entity or, as directed by Covered Entity, to an Individual in order to meet the requirements under 45 C.F.R. §164.524.

(8) Business Associate agrees to make any amendments to PHI in a Designated Record Set that the Covered Entity directs or agrees to pursuant to 45 C.F.R. §164.526 at the request of the Covered Entity, and in the time and manner agreed to by the parties.

(9) Business Associate agrees to make internal practices, books, and records, including policies and procedures and PHI, relating to the use and disclosure of PHI received from, or created or received by, Business Associate on behalf of

Covered Entity, available to Covered Entity or to the Secretary in a time and manner agreed to by the parties or designated by the Secretary, for purposes of the Secretary determining Covered Entity's compliance with the Privacy Rule.

(10) Business Associate agrees to document such disclosures of PHI and information related to such disclosures as would be required for Covered Entity to respond to a request by an Individual for an accounting of disclosures of PHI in accordance with 45 C.F.R. §164.528 and section 13405 of the HITECH Act (42 U.S.C. §17935) and any regulations promulgated thereunder.

(11) Business Associate agrees to provide to Covered Entity, in a time and manner agreed to by the parties, information collected in accordance with clause (h)(10) of this Section of the Contract, to permit Covered Entity to respond to a request by an Individual for an accounting of disclosures of PHI in accordance with 45 C.F.R. §164.528 and section 13405 of the HITECH Act (42 U.S.C. §17935) and any regulations promulgated thereunder. Business Associate agrees at the Covered Entity's direction to provide an accounting of disclosures of PHI directly to an individual in accordance with 45 C.F.R. §164.528 and section 13405 of the HITECH Act (42 U.S.C. §17935) and any regulations promulgated thereunder.

(12) Business Associate agrees to comply with any state or federal law that is more stringent than the Privacy Rule.

(13) Business Associate agrees to comply with the requirements of the HITECH Act relating to privacy and security that are applicable to the Covered Entity and with the requirements of 45 C.F.R. sections 164.504(e), 164.308, 164.310, 164.312, and 164.316.

(14) In the event that an individual requests that the Business Associate (a) restrict disclosures of PHI; (b) provide an accounting of disclosures of the individual's PHI; or (c) provide a copy of the individual's PHI in an electronic health record, the Business Associate agrees to notify the covered entity, in writing, within two business days of the request.

(15) Business Associate agrees that it shall not, directly or indirectly, receive any remuneration in exchange for PHI of an individual without (1) the written approval of the covered entity, unless receipt of remuneration in exchange for PHI is expressly authorized by this Contract and (2) the valid authorization of the individual, except for the purposes provided under section 13405(d)(2) of the HITECH Act (42 U.S.C. §17935(d)(2)) and in any accompanying regulations

(16) Obligations in the Event of a Breach.

A. The Business Associate agrees that, following the discovery of a breach of unsecured protected health information, it shall notify the Covered Entity of such breach in accordance with the requirements of section 13402 of HITECH (42 U.S.C. 17932(b)) and the provisions of this Section of the Contract.

B. Such notification shall be provided by the Business Associate to the Covered Entity without unreasonable delay, and in no case later than 30 days after the breach is discovered by the Business Associate, except as otherwise instructed in writing by a law enforcement official pursuant to section 13402(g) of HITECH (42 U.S.C. 17932(g)). A breach is considered discovered as of the first day on which it is, or reasonably should have been, known to the Business Associate. The notification shall include the identification and last known address, phone number and email address of each individual (or the next of kin of the individual if the individual is deceased) whose unsecured protected health information has been, or is reasonably believed by the Business Associate to have been, accessed, acquired, or disclosed during such breach.

C. The Business Associate agrees to include in the notification to the Covered Entity at least the following information:

1. A brief description of what happened, including the date of the breach and the date of the discovery of the breach, if known.
2. A description of the types of unsecured protected health information that were involved in the breach (such as full name, Social Security number, date of birth, home address, account number, or disability code).
3. The steps the Business Associate recommends that individuals take to protect themselves from potential harm resulting from the breach.
4. A detailed description of what the Business Associate is doing to investigate the breach, to mitigate losses, and to protect against any further breaches.
5. Whether a law enforcement official has advised either verbally or in writing the Business Associate that he or she has determined that notification or notice to individuals or the posting required under section 13402

of the HITECH Act would impede a criminal investigation or cause damage to national security and; if so, include contact information for said official.

D. Business Associate agrees to provide appropriate staffing and have established procedures to ensure that individuals informed by the Covered Entity of a breach by the Business Associate have the opportunity to ask questions and contact the Business Associate for additional information regarding the breach. Such procedures shall include a toll-free telephone number, an e-mail address, a posting on its Web site and a postal address. Business Associate agrees to include in the notification of a breach by the Business Associate to the Covered Entity, a written description of the procedures that have been established to meet these requirements. Costs of such contact procedures will be borne by the Contractor.

E. Business Associate agrees that, in the event of a breach, it has the burden to demonstrate that it has complied with all notification requirements set forth above, including evidence demonstrating the necessity of a delay in notification to the Covered Entity.

(i) Permitted Uses and Disclosure by Business Associate.

(1) General Use and Disclosure Provisions. Except as otherwise limited in this Section of the Contract, Business Associate may use or disclose PHI to perform functions, activities, or services for, or on behalf of, Covered Entity as specified in this Contract, provided that such use or disclosure would not violate the Privacy Rule if done by Covered Entity or the minimum necessary policies and procedures of the Covered Entity.

(2) Specific Use and Disclosure Provisions.

A. Except as otherwise limited in this Section of the Contract, Business Associate may use PHI for the proper management and administration of Business Associate or to carry out the legal responsibilities of Business Associate.

B. Except as otherwise limited in this Section of the Contract, Business Associate may disclose PHI for the proper management and administration of Business Associate, provided that disclosures are Required by Law, or Business Associate obtains reasonable assurances from the person to whom the information is disclosed that it will remain confidential and used or further disclosed only as Required by Law or for the purpose for which it was disclosed to the person, and the person notifies Business Associate of any instances of which it is aware in which the confidentiality of the information has been breached.

C. Except as otherwise limited in this Section of the Contract, Business Associate may use PHI to provide Data Aggregation services to Covered Entity as permitted by 45 C.F.R. §164.504(e)(2)(i)(B).

(j) Obligations of Covered Entity.

(1) Covered Entity shall notify Business Associate of any limitations in its notice of privacy practices of Covered Entity, in accordance with 45 C.F.R. §164.520, or to the extent that such limitation may affect Business Associate's use or disclosure of PHI.

(2) Covered Entity shall notify Business Associate of any changes in, or revocation of, permission by Individual to use or disclose PHI, to the extent that such changes may affect Business Associate's use or disclosure of PHI.

(3) Covered Entity shall notify Business Associate of any restriction to the use or disclosure of PHI that Covered Entity has agreed to in accordance with 45 C.F.R. §164.522, to the extent that such restriction may affect Business Associate's use or disclosure of PHI.

(k) Permissible Requests by Covered Entity. Covered Entity shall not request Business Associate to use or disclose PHI in any manner that would not be permissible under the Privacy Rule if done by the Covered Entity, except that Business Associate may use and disclose PHI for data aggregation, and management and administrative activities of Business Associate, as permitted under this Section of the Contract.

(l) Term and Termination.

(1) Term. The Term of this Section of the Contract shall be effective as of the date the Contract is effective and shall terminate when the information collected in accordance with clause (h)(10) of this Section of the Contract is provided to the Covered Entity and all of the PHI provided by Covered Entity to Business Associate, or created or received by Business Associate on behalf of Covered Entity, is destroyed or returned to Covered Entity, or, if it is infeasible to return or destroy PHI, protections are extended to such information, in accordance with the termination provisions in this Section.

(2) Termination for Cause. Upon Covered Entity's knowledge of a material breach by Business Associate, Covered Entity shall either:

A. Provide an opportunity for Business Associate to cure the breach or end the violation and terminate the Contract if Business Associate does not cure the breach or end the violation within the time specified by the Covered Entity; or

B. Immediately terminate the Contract if Business Associate has breached a material term of this Section of the Contract and cure is not possible; or

C. If neither termination nor cure is feasible, Covered Entity shall report the violation to the Secretary.

(3) Effect of Termination.

A. Except as provided in (l)(2) of this Section of the Contract, upon termination of this Contract, for any reason, Business Associate shall return or destroy all PHI received from Covered Entity, or created or received by Business Associate on behalf of Covered Entity. Business Associate shall also provide the information collected in accordance with clause (h)(10) of this Section of the Contract to the Covered Entity within ten business days of the notice of termination. This provision shall apply to PHI that is in the possession of subcontractors or agents of Business Associate. Business Associate shall retain no copies of the PHI.

B. In the event that Business Associate determines that returning or destroying the PHI is infeasible, Business Associate shall provide to Covered Entity notification of the conditions that make return or destruction infeasible. Upon documentation by Business Associate that return or destruction of PHI is infeasible, Business Associate shall extend the protections of this Section of the Contract to such PHI and limit further uses and disclosures of PHI to those purposes that make return or destruction infeasible, for as long as Business Associate maintains such PHI. Infeasibility of the return or destruction of PHI includes, but is not limited to, requirements under state or federal law that the Business Associate maintains or preserves the PHI or copies thereof.

(m) Miscellaneous Provisions.

(1) Regulatory References. A reference in this Section of the Contract to a section in the Privacy Rule means the section as in effect or as amended.

(2) Amendment. The Parties agree to take such action as is necessary to amend this Section of the Contract from time to time as is necessary for Covered Entity to comply with requirements of the Privacy Rule and the Health Insurance Portability and Accountability Act of 1996, Pub. L. No. 104-191.

(3) Survival. The respective rights and obligations of Business Associate shall survive the termination of this Contract.

(4) Effect on Contract. Except as specifically required to implement the purposes of this Section of the Contract, all other terms of the Contract shall remain in force and effect.

(5) Construction. This Section of the Contract shall be construed as broadly as necessary to implement and comply with the Privacy Standard. Any ambiguity in this Section of the Contract shall be resolved in favor of a meaning that complies, and is consistent with, the Privacy Standard.

(6) Disclaimer. Covered Entity makes no warranty or representation that compliance with this Section of the Contract will be adequate or satisfactory for Business Associate's own purposes. Covered Entity shall not be liable to Business Associate for any claim, civil or criminal penalty, loss or damage related to or arising from the unauthorized use or disclosure of PHI by Business Associate or any of its officers, directors, employees, contractors or agents, or any third party to whom Business Associate has disclosed PHI contrary to the provisions of this Contract or applicable law.

Business Associate is solely responsible for all decisions made, and actions taken, by Business Associate regarding the safeguarding, use and disclosure of PHI within its possession, custody or control.

(7) Indemnification. The Business Associate shall indemnify and hold the Covered Entity harmless from and against any and all claims, liabilities, judgments, fines, assessments, penalties, awards and any statutory damages that may be imposed or assessed pursuant to HIPAA, as amended, or the HITECH Act, including, without limitation, attorney's fees, expert witness fees, costs of investigation, litigation or dispute resolution, and costs awarded thereunder, relating to or arising out of any violation by the Business Associate and its agents, including subcontractors, of any obligation of Business Associate and its agents, including subcontractors, under this Section of the Contract, under HIPAA, the HITECH Act, the Privacy Rule and the Security Rule.

Contractor, on behalf of itself, its agents and employees, acknowledges that, as a result of a current or future business relationship with UCHC, it may receive or have access to PHI, including, but not limited to, electronic PHI and patient identifying information.

Contractor recognizes that any such PHI is and shall remain the property of UCHC and agrees that it acquires no title or rights to such PHI, including any de-identified information. Contractor further recognizes and agrees that any breach of confidentiality or misuse of such information may result in the termination of any agreement between UCHC and Contractor, legal action against Contractor, and/or the submission of a report about the breach or misuse to the Secretary of Health and Human Services.

The Authorized Representative's signature below indicates that Contractor understands and accepts the University of Connecticut Health Center Business Associate Agreement, as it may be applicable to Contractor now or in the future.

Name of Authorized Representative	Title of Authorized Representative
Signature	Date