07 - PLUMBING
INDEX OF DRAWINGS

DRAWING NUMBER	DRAWING TITLE	DRAWING NUMBER	DRAWING TITLE
P-001	PLUMBING INDEX OF DRAWINGS		
P-002	LEGEND & GENERAL NOTES		
P-003	PLUMBING SUPPLY PLAN		
P-004	PLUMBING DRAINAGE PLAN		
P-005	PLUMBING DETAILS		

THE DESIGN APPEARS TO CONFORM TO APPLICABLE CRITERIA. APPROVAL IS NOT TO BE CONSTRUED TO MEAN THAT ALL ASPECTS OF THE DESIGN HAVE BEEN PERSONALLY CHECKED BY THE UNDERSIGNED.

Theodore H. Nezames
2013.05.08
08:37:19-04'00'

TRANSPORTATION PRINCIPAL ENGINEER

REV.	DATE	REVISION DESCRIPTION	SHEET NO.
-	-	-	-
-	-	-	-
-	-	-	-
-	-	-	-
-	-	-	-
-	-	-	-

THE INFORMATION, INCLUDING ESTIMATED QUANTITIES OF WORK, SHOWN ON THESE SHEETS IS BASED ON LIMITED INVESTIGATIONS BY THE STATE AND IS IN NO WAY WARRANTED TO INDICATE THE CONDITIONS OF ACTUAL QUANTITIES OF WORK WHICH WILL BE REQUIRED.

Plotted Date: 1/17/2013

DESIGNER/DRAFTER: NAR
CHECKED BY: JSB
NOT TO SCALE

STATE OF CONNECTICUT
DEPARTMENT OF TRANSPORTATION

Filename: ...\FD_MSH_MEC_118_163_P001.dgn

SIGNATURE/ BLOCK:
OFFICE OF ENGINEERING
APPROVED BY: DATE:

PROJECT TITLE:
ROCKY HILL - GLASTONBURY
FERRY OFFICE BUILDING

TOWN: ROCKY HILL

DRAWING TITLE:
PLUMBING
INDEX OF DRAWINGS

PROJECT NO. 118-163
DRAWING NO. P-001
SHEET NO. 07.01

Connecticut Department of Transportation
QA/QC Format Check
PASS

LEGEND

PIPING

- COLD WATER
- SV — COMBINATION WASTE AND VENT
- D — DRAIN LINE
- HOT WATER
- IW — INDIRECT DRAIN
- S — SANITARY DRAIN ABOVE FLOOR OR GRADE
- S — SANITARY DRAIN BELOW FLOOR OR GRADE
- T — TEMPERED WATER
- VENT
- W — WASTE

FITTINGS

- BRANCH OFF TOP OF MAIN
- PIPE RISER DOWN
- PIPE RISER UP
- UNION

VALVES

- BALL
- CHECK
- PRESSURE AND TEMPERATURE RELIEF
- PRESSURE REDUCING
- THERMOSTATIC WATER CONTROL SET AT 110° F

PIPING SPECIALTIES

- BFP — REDUCED PRESSURE PRINCIPAL BACKFLOW PREVENTER
- BWV — BACKWATER VALVE
- CAP
- CLEANOUT
- CLEANOUT AT GRADE
- DIAL TYPE THERMOMETER
- DRAW OFF DRAIN
- FILTER
- PRESSURE GAUGE WITH BRASS PETCOCK
- STRAIGHT TYPE THERMOMETER
- STRAINER
- VB — VACUUM BREAKER
- WATER HAMMER ARRESTOR (WITH ACCESS DOOR IF REQUIRED)

PLUMBING FIXTURES

- EYE/FACE WASH UNIT
- KITCHEN SINK
- LAVATORY
- SERVICE SINK
- WATER CLOSET

ABBREVIATIONS

ADD'L	ADDITIONAL
AFF	ABOVE FINISHED FLOOR
AVG	AVERAGE
BFP	BACKFLOW PREVENTER
CI	CAST IRON
CLG	CEILING
CO	CLEAN OUT
CSBV	COMBINATION SHUTOFF & BALANCE VALVE
CW	DOMESTIC COLD WATER
dia	DIAMETER
DN	DOWN
DWG	DRAWING
EL	ELEVATION
EWT&B	EACH WAY TOP & BOTTOM
FCO	FLOOR CLEANOUT
FHC	FIRE HOSE CABINET
FSP	FIRE STANDPIPE
FT	FOOT/FEET
GA	GAUGE
GAL	GALLON
GALV	GALVANIZE
GPM	GALLONS PER MINUTE
HP	HIGH POINT
HORZ	HORIZONTAL
HW	DOMESTIC HOT WATER
id	INSIDE DIAMETER
INV	INVERT
max	MAXIMUM
MH	MANHOLE
min	MINIMUM
NO	NUMBER
NOM	NOMINAL
NTS	NOT TO SCALE
oc	ON CENTER
od	OUTSIDE DIAMETER
OPP	OPPOSITE
OWSJ	OPEN WEB STEEL JOIST
PEX	CROSSLINKED POLYETHYLENE
PLCS	PLACES
PVC	POLYVINYL CHLORIDE
R	RETURN
rad	RADIUS
REINF	REINFORCED
REQ'D	REQUIRED
RL	RAIN LEADER
S	SUPPLY
SAN	SANITARY
SQ	SQUARE
STD	STANDARD
T&B	TOP & BOTTOM
TOS	TOP OF SLAB
TW	TEMPERED WATER
TPS	TRAP PRIMER SYSTEM
TD	TRENCH DRAIN
TYP	TYPICAL
UG	UNDERGROUND
UON	UNLESS OTHERWISE NOTED
UST	UNDERGROUND STORAGE TANK
V	VENT
VERT	VERTICAL
VIF	VERIFY IN FIELD
VTR	VENT THRU ROOF
W/	WITH
WCO	WALL CLEANOUT
W	WASTE

PLUMBING FIXTURE SCHEDULE

MINIMUM PIPE SIZES

NO.	FIXTURE	SANITARY	VENT	HW	CW
1	ACCESSIBLE WATER CLOSET	4"	2"	—	1"
2	KITCHEN SINK	2"	1 1/2"	1/2"	1/2"
3	ACCESSIBLE LAVATORY	2"	1 1/2"	1/2"	1/2"
4	SERVICE SINK	3"	2"	3/4"	1/2"
5	EYE/FACE WASH UNIT	—	—	1/2"	1/2"

NOTE: ALL FIXTURES TO BE PROVIDED WITH TRAPS AND SHUTOFF VALVES.

GENERAL NOTES

1. THE INSTALLER SHALL NOTIFY THE ENGINEER OF ANY DISCREPANCIES BETWEEN FIELD CONDITIONS AND THE CONTRACT BEFORE PROCEEDING WITH THAT PORTION OF THE WORK. FAILURE TO NOTIFY THE ENGINEER WILL NOT RELIEVE THE INSTALLER OF RESPONSIBILITY. THE INSTALLER SHALL CORRECT ALL WORK ARISING FROM SUCH FAILURE TO COORDINATE DISCREPANCIES TO THE SATISFACTION OF THE ENGINEER WITHOUT ADDED COST TO THE OWNER.
2. PLUMBING INSTALLER SHALL COORDINATE WITH ALL NECESSARY INSTALLERS TO PREVENT INSTALLATION CONFLICTS.
3. OPENINGS FOR PENETRATIONS IN FLOORS AND WALLS SHALL BE FIELD VERIFIED FOR EXACT LOCATION AND COORDINATED TO CLEAR BEAMS AND REINFORCEMENT BARS.
4. WHERE PIPES PASS THROUGH EXPOSED SURFACES, SEAL AROUND OPENINGS AND FINISH THE OPENINGS. FIRE SEAL WHERE PIPES PASS THROUGH FIRE RATED CONSTRUCTION. FIRE SEAL SHALL MATCH THE FIRE RATING OF THE ADJACENT CONSTRUCTION.
5. PROVIDE SHUTOFF VALVES AND UNIONS/FLANGES AT BASE OF ALL RISERS, MAINS, BRANCHES, AND CONNECTIONS TO ISOLATE FOR MAINTENANCE PURPOSES.
6. PROVIDE ACCESS DOORS FOR SERVICE ACCESS TO VALVES, AIR VENTS, AND OTHER ACCESSORIES IN CONCEALED SPACES, FOR MAINTENANCE AND INSPECTION. PROVIDE FIRE RATED DEVICES MATCHING THE ADJACENT CONSTRUCTION IN FIRE RATED CONSTRUCTION.
7. PROVIDE DRAIN VALVES WITH HOSE THREADS AT ALL LOW POINTS OF PIPING AND AIR VENTS AT ALL HIGH POINTS OF PIPING.
8. UNLESS OTHERWISE INDICATED, ALL BRANCH PIPING SHALL BE OFF THE BOTTOM OF THE MAIN PIPING RUN.
9. EXCAVATION FOR PLUMBING SYSTEMS WITHIN THE BUILDING TO A POINT 5-FEET OFF THE OUTSIDE OF THE FOUNDATION WALL IS INCLUDED FOR PAYMENT IN THE MLSI. THERE WILL BE NO SEPARATE PAYMENT FOR EXCAVATION FOR THESE SYSTEMS.

REV.	DATE	REVISION DESCRIPTION	SHEET NO.
-	-	-	-
-	-	-	-
-	-	-	-
-	-	-	-
-	-	-	-
-	-	-	-

THE INFORMATION, INCLUDING ESTIMATED QUANTITIES OF WORK, SHOWN ON THESE SHEETS IS BASED ON LIMITED INVESTIGATIONS BY THE STATE AND IS IN NO WAY WARRANTED TO INDICATE THE CONDITIONS OF ACTUAL QUANTITIES OF WORK WHICH WILL BE REQUIRED.

Plotted Date: 1/28/2013

DESIGNER/DRAFTER: NAR
CHECKED BY: JSB
NOT TO SCALE

STATE OF CONNECTICUT
DEPARTMENT OF TRANSPORTATION

Filename: ...\FD_MSH_MEC_118_163_P002.dgn

SIGNATURE/BLOCK:
OFFICE OF ENGINEERING
APPROVED BY: DATE:

PROJECT TITLE:
ROCKY HILL - GLASTONBURY FERRY OFFICE BUILDING

TOWN: ROCKY HILL

DRAWING TITLE:
LEGEND & GENERAL NOTES

PROJECT NO. 118-163
DRAWING NO. P-002
SHEET NO. 07.02

NOTES:

1. REFER TO PLAN P-002 FOR PLUMBING FIXTURE SCHEDULE.
2. REFER TO DOMESTIC WATER PIPING RISER DIAGRAM ON PLAN P-005 FOR ALL WATER HAMMER ARRESTOR LOCATIONS, ADDITIONAL BALL VALVES, AND ANY DIMENSIONS NOT PROVIDED ON THE PLAN VIEW.
3. REFER TO PLAN P-005 FOR WATER SERVICE ENTRANCE DETAIL.
4. ALL PIPING IN THE OFFICE AREA SHALL BE CONCEALED IN INTERIOR WALLS OR UNDER FINISHED FLOOR. ALL PIPING IN THE FERRY REPAIR/MAINTENANCE ROOM SHALL BE RUN TIGHT TO WALLS. SOME LOCATIONS SHOWN ARE FOR CLARITY ONLY.
5. WATER HEATER WITH WALL-MOUNT RESTRAINT SYSTEM AND DRIP PAN. REFER TO DETAIL ON PLAN P-005 FOR INSTALLATION LOCATION OF PIPING SPECIALTIES.
6. PIPE HOT AND COLD WATER TO TEMPERING VALVE LOCATED IN SURFACE MOUNTED CABINET. PIPE TEMPERED WATER LINE FROM TEMPERING VALVE TO EYE/FACE WASH UNIT.

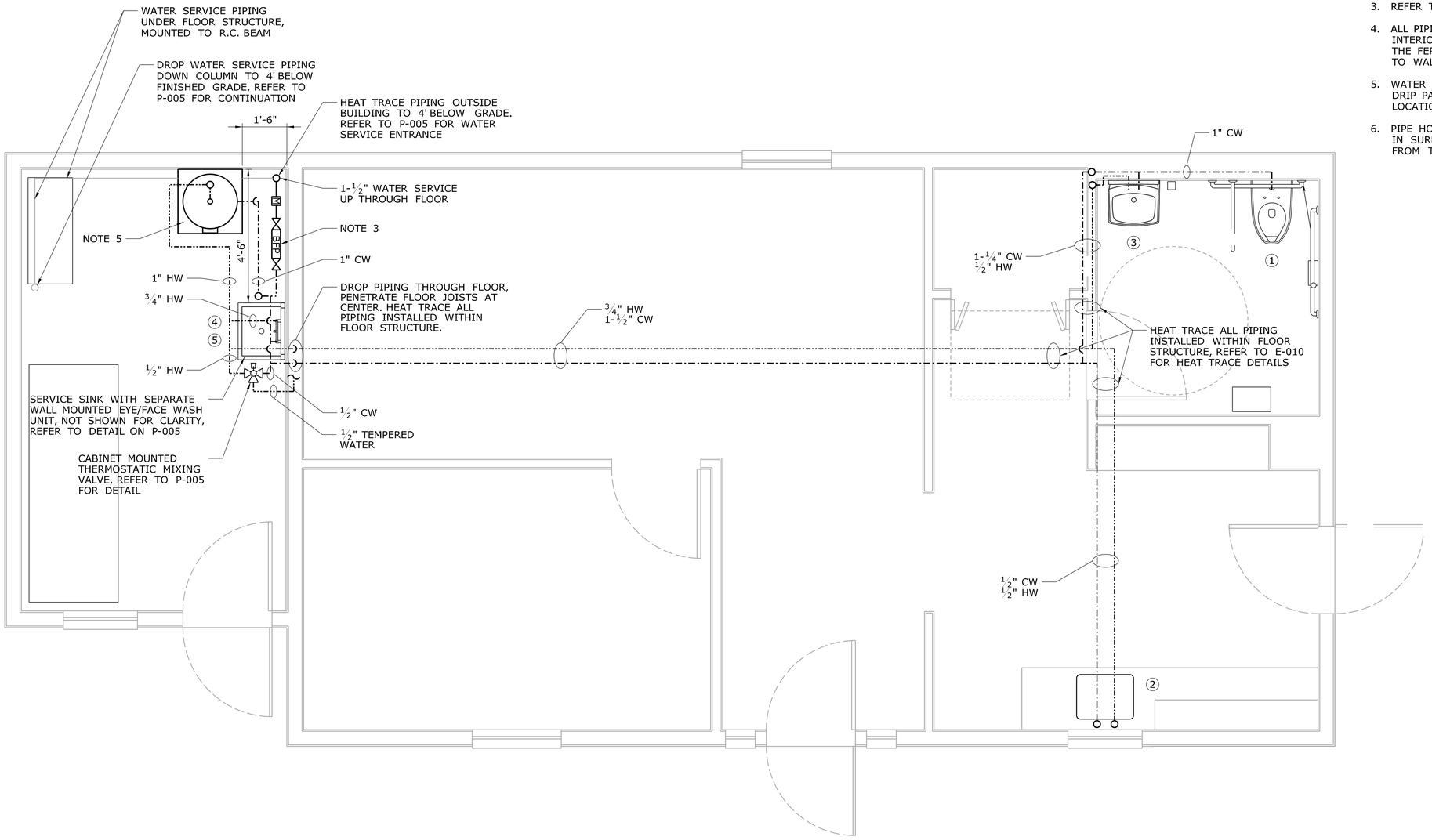

REV.	DATE	REVISION DESCRIPTION	SHEET NO.
-	-	-	-
-	-	-	-
-	-	-	-
-	-	-	-
-	-	-	-
-	-	-	-

THE INFORMATION, INCLUDING ESTIMATED QUANTITIES OF WORK, SHOWN ON THESE SHEETS IS BASED ON LIMITED INVESTIGATIONS BY THE STATE AND IS IN NO WAY WARRANTED TO INDICATE THE CONDITIONS OF ACTUAL QUANTITIES OF WORK WHICH WILL BE REQUIRED.

Plotted Date: 1/17/2013

DESIGNER/DRAFTER: **NAR**

CHECKED BY: **JSB**

SCALE: 1/2" = 1'-0"

STATE OF CONNECTICUT
DEPARTMENT OF TRANSPORTATION

Filename: ...\FD_MSH_MEC_118_163_P003.dgn

SIGNATURE/ BLOCK:

OFFICE OF ENGINEERING

APPROVED BY: DATE:

PROJECT TITLE:

ROCKY HILL - GLASTONBURY FERRY OFFICE BUILDING

TOWN: **ROCKY HILL**

DRAWING TITLE: **PLUMBING SUPPLY PLAN**

PROJECT NO. **118-163**

DRAWING NO. **P-003**

SHEET NO. **07.03**

NOTES:

1. REFER TO PLAN P-002 FOR PLUMBING FIXTURE SCHEDULE.
2. REFER TO SANITARY RISER PIPING RISER DIAGRAM ON SHEET P-005 FOR ANY DIMENSIONS NOT PROVIDED ON THE PLAN VIEW.
3. ALL PIPING AFF SHALL BE CONCEALED IN WALLS, IN FLOOR, OR BELOW FLOOR, EXCEPT IN THE FERRY MAINTENANCE ROOM, RUN PIPING TIGHT TO WALLS. SOME LOCATIONS SHOWN ARE FOR CLARITY ONLY.
4. BFP DRAIN, REFER TO PLAN P-005 FOR SERVICE ENTRANCE DETAIL.
5. PROVIDE (2) 45-DEGREE FITTINGS TO MAKE A 90-DEGREE CHANGE IN DIRECTION WITHOUT PROVIDING A CLEANOUT IN ACCORDANCE WITH THE PLUMBING CODE.
6. SANITARY PIPING DROPS FROM FIXTURES SHALL DROP THROUGH FLOOR UNLESS NOTED OTHERWISE. SANITARY PIPING SHALL RUN UNDER FLOOR OR DECK JOISTS UNLESS NOTED OTHERWISE. REFER TO DETAIL ON P-005.

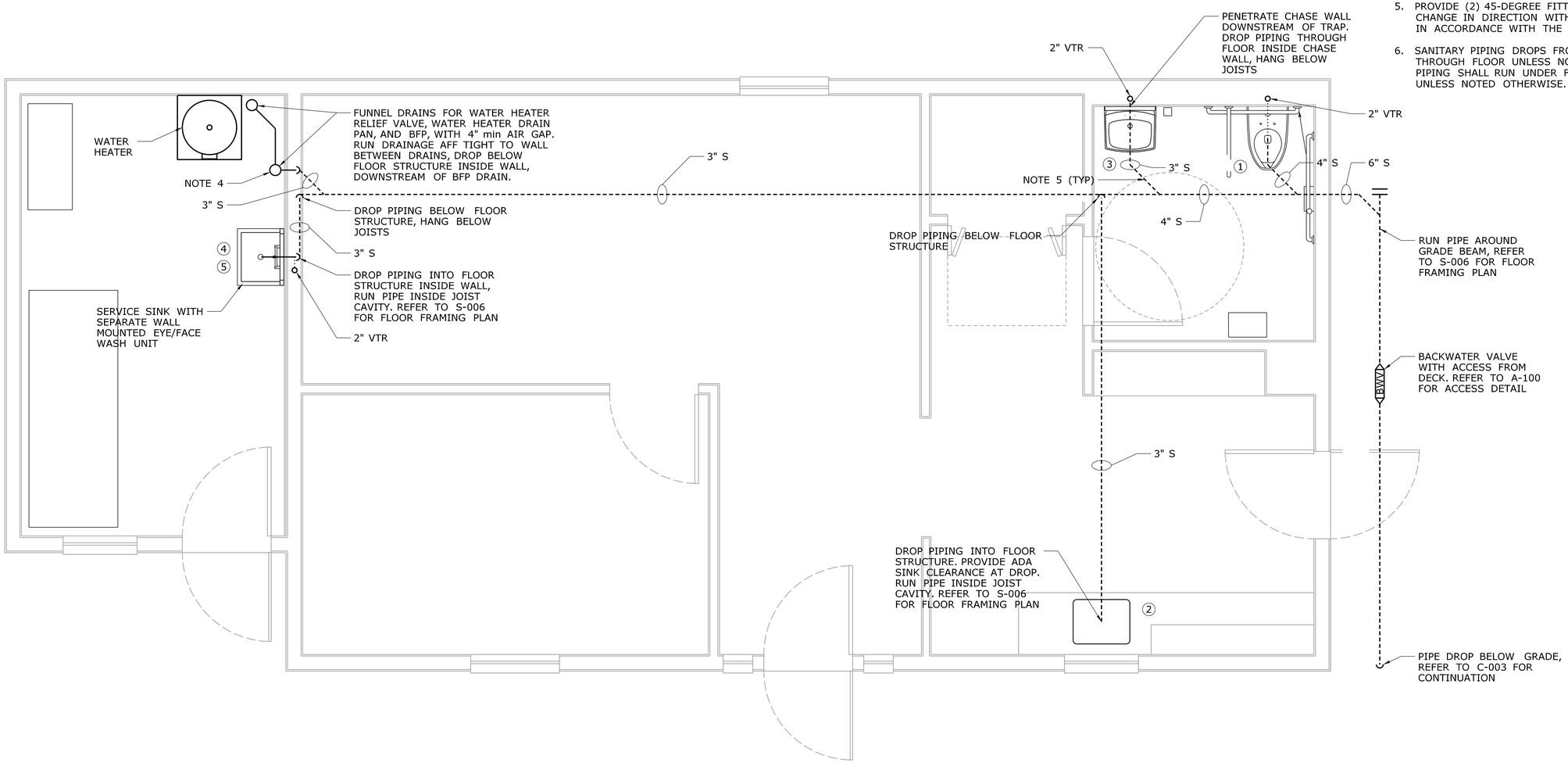

REV.	DATE	REVISION DESCRIPTION	SHEET NO.
-	-	-	-
-	-	-	-
-	-	-	-
-	-	-	-
-	-	-	-
-	-	-	-

THE INFORMATION, INCLUDING ESTIMATED QUANTITIES OF WORK, SHOWN ON THESE SHEETS IS BASED ON LIMITED INVESTIGATIONS BY THE STATE AND IS IN NO WAY WARRANTED TO INDICATE THE CONDITIONS OF ACTUAL QUANTITIES OF WORK WHICH WILL BE REQUIRED.

Plotted Date: 1/17/2013

DESIGNER/DRAFTER: **NAR**

CHECKED BY: **JSB**

SCALE: 1/2" = 1'-0"

STATE OF CONNECTICUT
DEPARTMENT OF TRANSPORTATION

Filename: ...\FD_MSH_MEC_118_163_P004.dgn

SIGNATURE/ BLOCK:

OFFICE OF ENGINEERING

APPROVED BY: DATE:

PROJECT TITLE:

ROCKY HILL - GLASTONBURY FERRY OFFICE BUILDING

TOWN: **ROCKY HILL**

DRAWING TITLE: **PLUMBING DRAINAGE PLAN**

PROJECT NO. **118-163**

DRAWING NO. **P-004**

SHEET NO. **07.04**

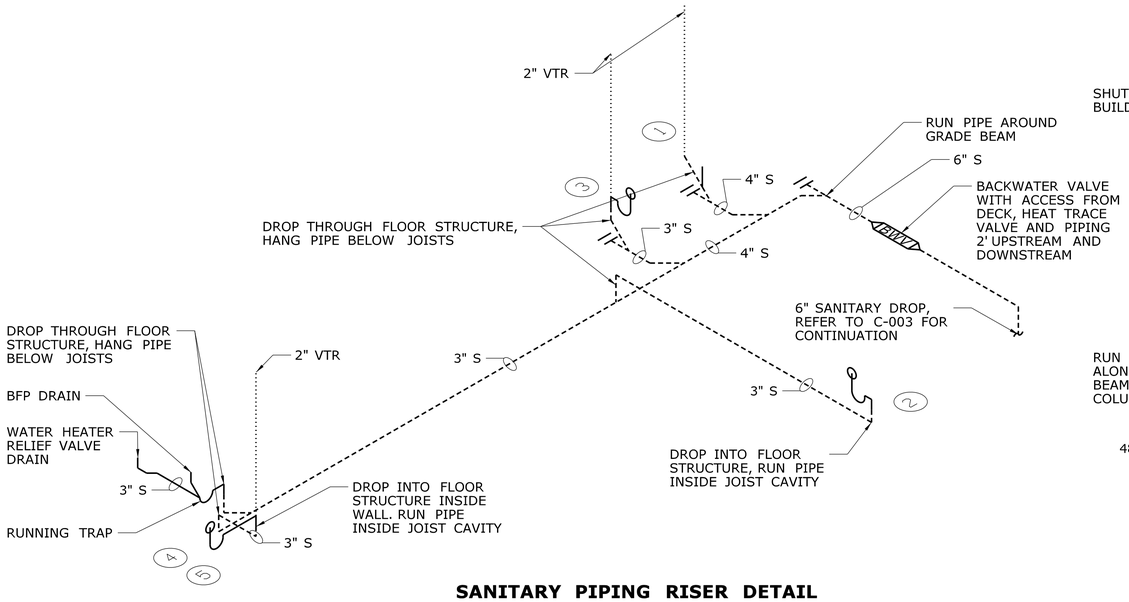

SANITARY PIPING RISER DETAIL

NOTE: REFER TO S-006 FOR FLOOR FRAMING PLAN

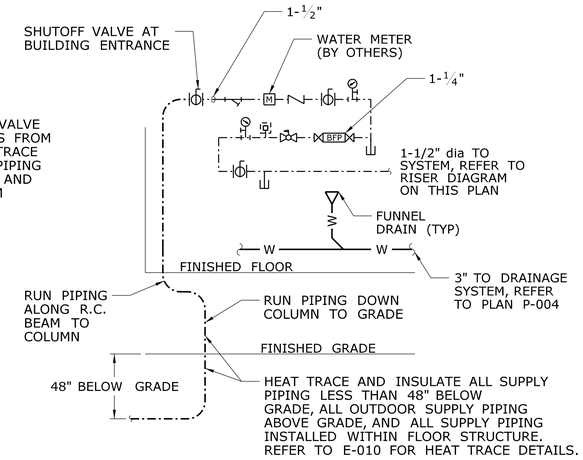

SERVICE ENTRANCE DETAIL

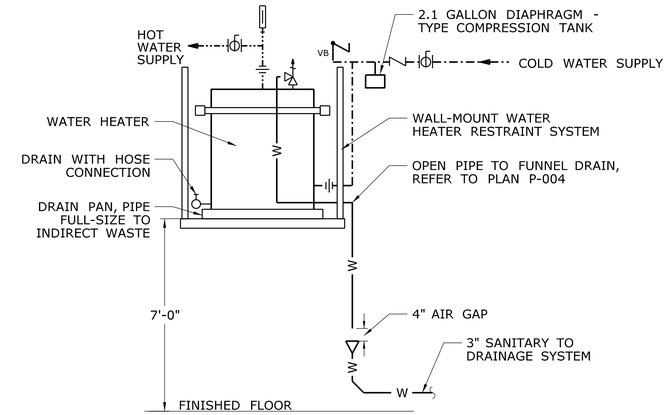

WATER HEATER DETAIL

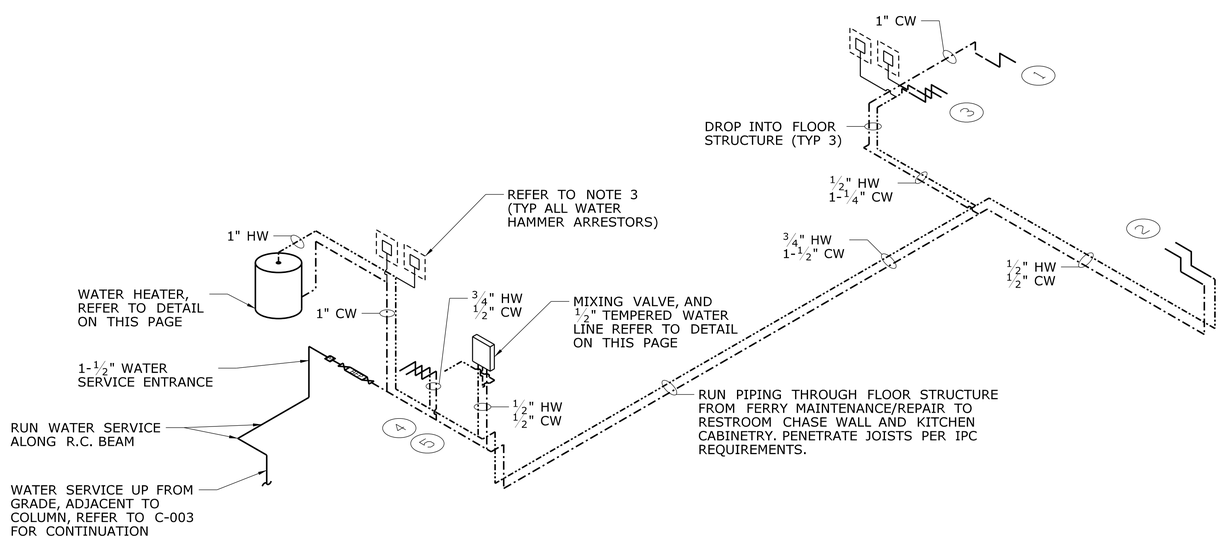

DOMESTIC WATER PIPING RISER DIAGRAM

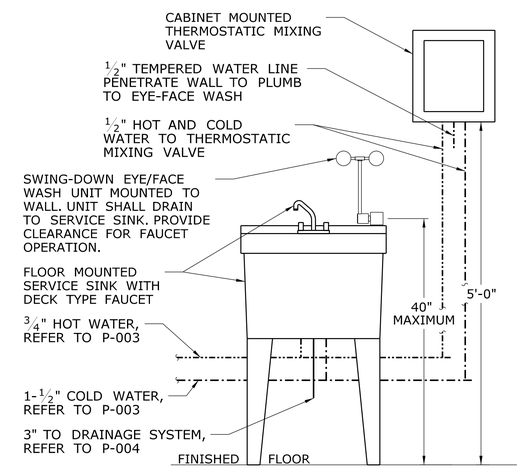

SERVICE SINK AND EYE/FACE WASH DETAIL

NOTES:

1. REFER TO PLAN P-002 FOR PLUMBING FIXTURE SCHEDULE.
2. REFER TO PLANS FOR FIXTURE LOCATIONS.
3. LOCATE ALL WATER HAMMER ARRESTORS AT THE TOP OF THE VERTICAL RISERS, LOCATIONS SHOWN FOR CLARITY ONLY.

REV.	DATE	REVISION DESCRIPTION	SHEET NO.
-	-	-	-
-	-	-	-
-	-	-	-
-	-	-	-
-	-	-	-
-	-	-	-

THE INFORMATION, INCLUDING ESTIMATED QUANTITIES OF WORK, SHOWN ON THESE SHEETS IS BASED ON LIMITED INVESTIGATIONS BY THE STATE AND IS IN NO WAY WARRANTED TO INDICATE THE CONDITIONS OF ACTUAL QUANTITIES OF WORK WHICH WILL BE REQUIRED.

Plotted Date: 1/17/2013

DESIGNER/DRAFTER: NAR
CHECKED BY: JSB
NOT TO SCALE

STATE OF CONNECTICUT
DEPARTMENT OF TRANSPORTATION

Filename: ...\FD_MSH_MEC_118_163_P005.dgn

SIGNATURE/BLOCK: OFFICE OF ENGINEERING
APPROVED BY: DATE:

PROJECT TITLE: ROCKY HILL - GLASTONBURY FERRY OFFICE BUILDING

TOWN: ROCKY HILL

DRAWING TITLE: PLUMBING DETAILS

PROJECT NO. 118-163
DRAWING NO. P-005
SHEET NO. 07.05