08 - MECHANICAL
INDEX OF DRAWINGS

DRAWING NUMBER	DRAWING TITLE	DRAWING NUMBER	DRAWING TITLE
M-001	MECHANICAL INDEX OF DRAWINGS		
M-002	LEGEND & GENERAL NOTES		
M-003	MECHANICAL PLAN		
M-004	TYPICAL HVAC DETAILS		
M-005	MECHANICAL SCHEDULES AND HVAC DETAILS		

THE DESIGN APPEARS TO CONFORM TO APPLICABLE CRITERIA. APPROVAL IS NOT TO BE CONSTRUED TO MEAN THAT ALL ASPECTS OF THE DESIGN HAVE BEEN PERSONALLY CHECKED BY THE UNDERSIGNED.

Theodore H. Nezames
2013.05.08
08:43:46-04'00'

TRANSPORTATION PRINCIPAL ENGINEER

REV.	DATE	REVISION DESCRIPTION	SHEET NO.
-	-	-	-
-	-	-	-
-	-	-	-
-	-	-	-
-	-	-	-
-	-	-	-

THE INFORMATION, INCLUDING ESTIMATED QUANTITIES OF WORK, SHOWN ON THESE SHEETS IS BASED ON LIMITED INVESTIGATIONS BY THE STATE AND IS IN NO WAY WARRANTED TO INDICATE THE CONDITIONS OF ACTUAL QUANTITIES OF WORK WHICH WILL BE REQUIRED.

Plotted Date: 1/17/2013

DESIGNER/DRAFTER: NAR
CHECKED BY: JSB
NOT TO SCALE

STATE OF CONNECTICUT
DEPARTMENT OF TRANSPORTATION

Filename: ...\FD_MSH_MEC_118_163_M001.dgn

SIGNATURE/ BLOCK:
OFFICE OF ENGINEERING
APPROVED BY: DATE:

PROJECT TITLE:
ROCKY HILL - GLASTONBURY FERRY OFFICE BUILDING

TOWN: ROCKY HILL

DRAWING TITLE: MECHANICAL INDEX OF DRAWINGS

PROJECT NO. 118-163
DRAWING NO. M-001
SHEET NO. 08.01

Connecticut Department of Transportation
QA/QC Format Check
PASS

LEGEND

FITTINGS

- PIPE RISER DOWN
- PIPE RISER UP
- UNION

VALVES

- ANGLE
- BALL
- CHECK
- SERVICE

PIPING SPECIALTIES

- CAP
- DIAL TYPE THERMOMETER
- PRESSURE GUAGE WITH BRASS PETCOCK
- STRAIGHT TYPE THERMOMETER
- STRAINER
- WATER HAMMER ARRESTOR (WITH ACCESS DOOR IF REQUIRED)

AIR MOVING DEVICES

- CO2 DETECTOR, CARBON DIOXIDE
- R 1,2 FAN, AXIAL FLOW (AF-X)
- S 1,2 FAN, CENTRIFUGAL (CF-X)

DUCTWORK

- AD ACCESS DOOR
- FD DAMPER, FIRE
- VD DAMPER, VOLUME
- W x D DUCT SECTION, RETURN OR EXHAUST
- W x D DUCT SECTION, SUPPLY
- W x D DUCT SIZE (WIDTH x DEPTH) - INCHES (DUCT SIZES ARE INSIDE DIMENSIONS)
- DUCT SMOKE DETECTOR
- FLEXIBLE CONNECTION
- FLEXIBLE DUCT
- F FREEZESTAT
- S SENSOR, DUCT
- V SENSOR, VELOCITY

GRILLES, REGISTERS, AND DIFFUSERS

- 2-WAY CEILING DIFFUSER (D)
- 4-WAY CEILING DIFFUSER (D)
- RETURN GRILLE (RG)
- UC D" CFM UNDERCUT DOOR

LEGEND CONT.

MISCELLANEOUS

- CONDENSING UNIT
- DRYER
- ELECTRIC BASEBOARD HEATER
- EXPANSION VALVE
- FILTER
- T OUTDOOR AIR TEMPERATURE SENSOR
- SIGHT GLASS
- S SPACE SENSOR
- S EO SPACE SENSOR WITH EMERGENCY OVERRIDE

GENERAL NOTES

1. THE INSTALLER SHALL NOTIFY THE ENGINEER OF ANY DISCREPANCIES BETWEEN FIELD CONDITIONS AND THE CONTRACT BEFORE PROCEEDING WITH THAT PORTION OF THE WORK. FAILURE TO NOTIFY THE ENGINEER WILL NOT RELIEVE THE INSTALLER OF RESPONSIBILITY. THE INSTALLER SHALL CORRECT ALL WORK ARISING FROM SUCH FAILURE TO COORDINATE DISCREPANCIES TO THE SATISFACTION OF THE ENGINEER WITHOUT ADDITIONAL COST TO THE OWNER.
2. MECHANICAL INSTALLER SHALL BE REQUIRED TO COORDINATE WITH ALL NECESSARY CONTRACTORS TO PREVENT INSTALLATION CONFLICTS.
3. ALL DUCTWORK AND EQUIPMENT SHALL BE SUPPORTED TO SUIT FIELD CONDITIONS AS APPROVED BY THE DESIGNER.
4. USE FLEXIBLE CONNECTIONS ON ALL EQUIPMENT SUPPLY, RETURN, & EXHAUST OPENINGS.
5. METHOD OF SEALING HVAC WALL PENETRATIONS SHALL BE IN ACCORDANCE WITH NFPA STANDARDS.
6. HVAC EQUIPMENT CLEARANCES SHALL BE IN ACCORDANCE WITH NFPA STANDARDS, INCLUDING NFPA 90A AND NFPA 251.
   a. ALL SPACE SENSORS IN THE OFFICE AREA SHALL BE MOUNTED 48" AFF MAX TO TOP OF SENSOR.
8. UNLESS OTHERWISE INDICATED, ALL BRANCH PIPING SHALL BE OFF THE BOTTOM OF THE MAIN PIPING RUN.
9. EXCAVATION FOR MECHANICAL SYSTEMS WITHIN THE BUILDING TO A POINT 5-FEET OFF THE OUTSIDE OF THE FOUNDATION WALL IS INCLUDED FOR PAYMENT IN THE MLSI. THERE WILL BE NO SEPARATE PAYMENT FOR EXCAVATION FOR THESE SYSTEMS.

ABBREVIATIONS

AC	AIR CONDITIONING
AD	ACCESS DOOR
AF	AXIAL FAN
AFF	ABOVE FINISHED FLOOR
AHU	AIR HANDLING UNIT
AL	ACOUSTICAL LINING
AMB	AMBIENT
ATC	AUTOMATIC TEMPERATURE CONTROL
AVG	AVERAGE
BAS	BUILDING AUTOMATION SYSTEM
BDD	BACKDRAFT DAMPER
BO	BLANK OFF
BOD	BOTTOM OF DUCT
BOS	BOTTOM OF STEEL
BTUH	BRITISH THERMAL UNITS/HOUR
C	CONVECTOR
CA	COMBUSTION AIR
CAP	CAPACITY
CCH	CABINET CONVECTION HEATER
CFM	CUBIC FEET PER MINUTE
CLG	CEILING
CSBV	COMBINATION SHUTOFF & BALANCE
CU	CONDENSING UNIT
CUH	CABINET UNIT HEATER
D	DIFFUSER
DBT	DRY BULB TEMPERATURE
DC	DOOR CONTACT
dia	DIAMETER
DN	DOWN
DOD	DRAW OFF DRAIN
DWG	DRAWING
EA	EXHAUST AIR
EAT	ENTERING AIR TEMPERATURE
EDB	ENTERING DRY BULB
EER	ENERGY EFFICIENCY RATIO
EF	EXHAUST FAN
EFF	EFFICIENCY
EL	ELEVATION
ELEC	ELECTRICAL
ESP	EXTERNAL STATIC PRESSURE
EWB	ENTERING WET BULB
EWT	ENTERING WATER TEMPERATURE
EXH	EXHAUST
FA	FRESH AIR
FC	FLEXIBLE CONNECTION
FCU	FAN COIL UNIT
FD	FIRE DAMPER
FO	FUEL OIL
FPM	FEET PER MINUTE
FRP	FIBERGLASS REINFORCED PIPE
FT	FOOT/FEET
FTR	FINNED TUBE RADIATION
GA	GAUGE
GAL	GALLON
GALV	GALVANIZED
GPM	GALLONS PER MINUTE
H	HOT
HP	HORSEPOWER
HGT	HEIGHT
HV	HEATING AND VENTILATION
HVAC	HEATING, VENTILATION, AND AIR CONDITIONING
HWB	HOT WATER BOILER
HWR	HOT WATER RETURN
HWS	HOT WATER SUPPLY
Hz	HERTZ

ABBREVIATIONS CONT.

id	INSIDE DIAMETER
JB	JUNCTION BOX
KW	KILOWATT
LAT	LEAVING AIR TEMPERATURE
LDB	LEAVING DRY BULB
LWB	LEAVING WET BULB
LWT	LEAVING WATER TEMPERATURE
max	MAXIMUM
MBH	THOUSAND BTUH
min	MINIMUM
MOD	MOTOR OPERATED DAMPER
MTD	MOUNTED
N	NEUTRAL
NO	NUMBER
NOM	NOMINAL
NTS	NOT TO SCALE
OA	OUTDOOR AIR
oc	ON CENTER
od	OUTSIDE DIAMETER
OL	OVER LOAD
OPP	OPPOSITE
PD	PRESSURE DROP
PF	PADDLE FAN
PH	PHASE
PLCS	PLACES
PVC	POLY VINYL CHLORIDE CONDUIT
R	RETURN
rad	RADIUS
RA	RETURN AIR
REQ'D	REQUIRED
RG	RETURN GRILLE
RHC	REHEAT COIL
RMC	RIGID METAL CONDUIT
RPM	REVOLUTIONS PER MINUTE
RSC	RIGID STEEL CONDUIT
S	SUPPLY
SA	SUPPLY AIR
SD	SMOKE DETECTOR
SEER	SEASONAL ENERGY EFFICIENCY RATIO
SP	STATIC PRESSURE
SQ	SQUARE
STD	STANDARD
TCM	THERMOSTAT CONTROL MODULE
TEMP	TEMPERATURE
TSP	TOTAL STATIC PRESSURE
TYP	TYPICAL
UH	UNIT HEATER
UON	UNLESS OTHERWISE NOTED
UST	UNDERGROUND STORAGE TANK
UV	UNIT VENTILATOR
V	VOLT
VAC	VOLTAGE ALTERNATING CURRENT
VAV	VARIABLE AIR VOLUME
VD	VOLUME DAMPER
VIF	VERIFY IN FIELD
W/	WITH
WG	WATER GAUGE
WBT	WET BULB TEMPERATURE
WPD	WATER PRESSURE DROP
WTD	WATER TEMPERATURE DROP

REV.	DATE	REVISION DESCRIPTION	SHEET NO.
-	-	-	-
-	-	-	-
-	-	-	-
-	-	-	-
-	-	-	-
-	-	-	-

THE INFORMATION, INCLUDING ESTIMATED QUANTITIES OF WORK, SHOWN ON THESE SHEETS IS BASED ON LIMITED INVESTIGATIONS BY THE STATE AND IS IN NO WAY WARRANTED TO INDICATE THE CONDITIONS OF ACTUAL QUANTITIES OF WORK WHICH WILL BE REQUIRED.

Plotted Date: 1/17/2013

DESIGNER/DRAFTER: NAR
CHECKED BY: JSB
NOT TO SCALE

STATE OF CONNECTICUT
DEPARTMENT OF TRANSPORTATION

Filename: ...\FD_MSH_MEC_118_163_M002.dgn

SIGNATURE/BLOCK:
OFFICE OF ENGINEERING
APPROVED BY: DATE:

PROJECT TITLE:
ROCKY HILL - GLASTONBURY FERRY OFFICE BUILDING

TOWN: ROCKY HILL

DRAWING TITLE: LEGEND & GENERAL NOTES

PROJECT NO. 118-163
DRAWING NO. M-002
SHEET NO. 08.02

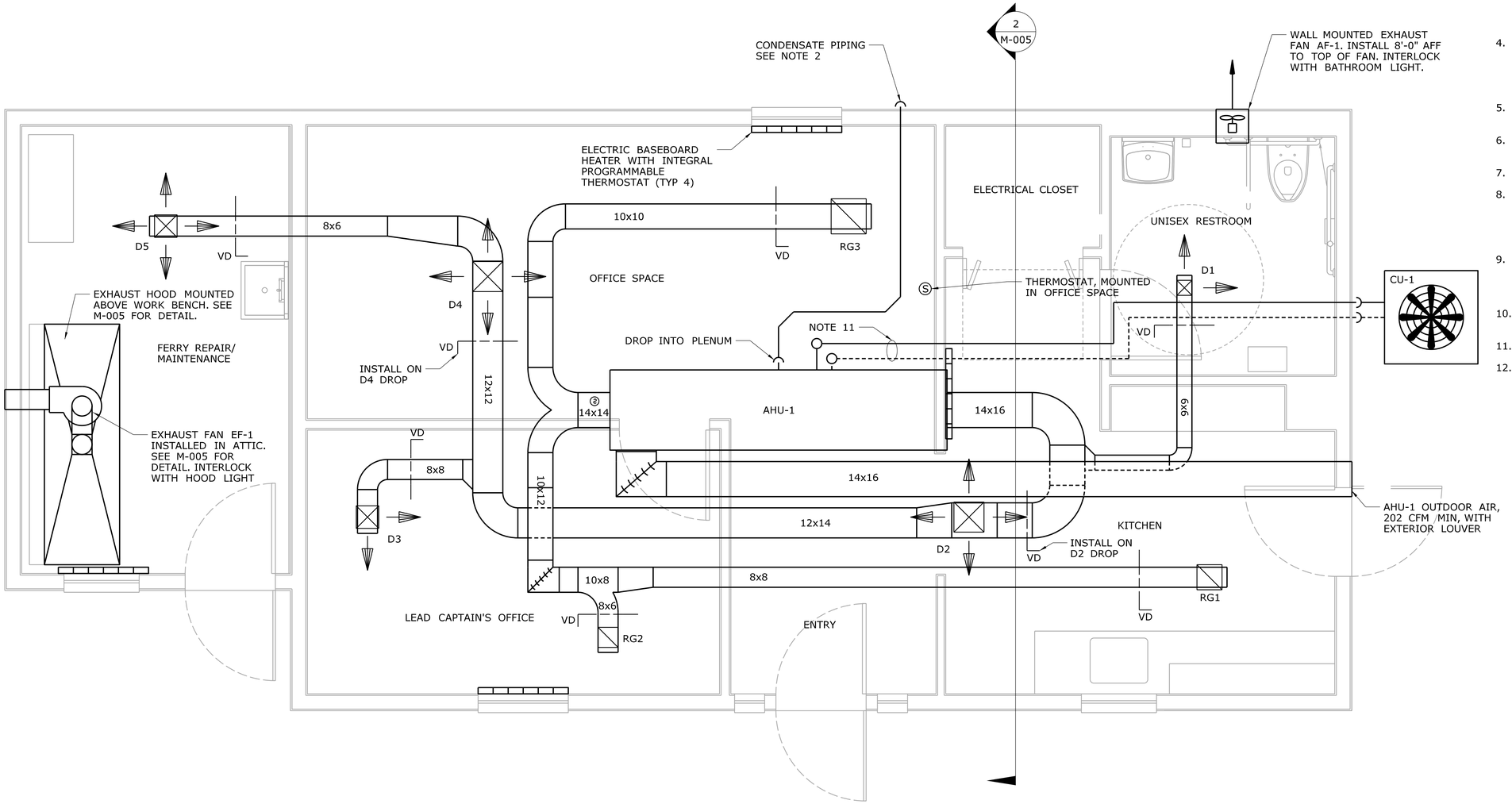

NOTES:

1. AIR HANDLING UNIT PER MANUFACTURERS RECOMMENDATIONS. INSTALL AHU-1 AND DUCTWORK IN ATTIC. INSTALL CU-1 ON DECK.
2. 1"ø PVC CONDENSATE DRAIN PIPING FROM AIR HANDLING UNIT CONDENSATE DRAIN TRAP. HORIZONTAL PIPING SHALL BE SLOPED 1/8-INCH PER FOOT. DROP PIPING DOWN INTO PLENUM, THEN PENETRATE THROUGH EXTERIOR WALL BELOW TOP PLATE AND DRAIN THROUGH SOFFIT.
3. PROVIDE 36" WIDE PLYWOOD FLOORING PASSAGEWAY FROM THE ATTIC ACCESS TO THE SERVICE SPACE AT THE FRONT OF THE AIR HANDLING UNIT. SEE S-007 FOR DETAIL. THE PASSAGEWAY AND SERVICE SPACE SHALL BE UNOBSTRUCTED UP TO A MINIMUM HEIGHT OF 30".
4. PROVIDE AN AUXILIARY DRAIN PAN UNDER AIR HANDLING UNIT WITH A MINIMUM OF 1½" DEPTH AND 3" LARGER IN LENGTH AND WIDTH THAN THE UNIT. PROVIDE WATER-LEVEL DETECTION DEVICE THAT WILL SHUT DOWN THE UNIT BEFORE THE PAN WILL OVERFLOW.
5. AIR HANDLING UNIT SHALL BE MOUNTED WITH VIBRATION ISOLATORS IN THE AUXILIARY DRAIN PAN.
6. PROVIDE FLEXIBLE DUCT FOR DROPS DOWN TO DIFFUSERS AND GRILLES.
7. PROVIDE INSECT SCREEN ON ALL LOUVER OPENINGS.
8. REFRIGERANT LINES PER MANUFACTURER'S WRITTEN INSTRUCTIONS. LINES SHALL BE RUN FROM AHU-1 A MINIMUM OF 30" ABOVE ATTIC FLOOR WHERE POSSIBLE. LINES SHALL PENETRATE EXTERIOR WALL 12" ABOVE ATTIC FLOOR ADJACENT TO CU-1.
9. DUCT MOUNTED SMOKE DETECTOR TO BE FURNISHED IN RETURN PLENUM, WIRED, AND CONNECTED BY THE ELECTRICAL INSTALLER. TO BE INSTALLED BY THE MECHANICAL INSTALLER.
10. REFER TO PLAN A-110 FOR THE REFLECTED CEILING PLAN.
11. REFER TO PLAN M-004 FOR DUCT DETAILS.
12. REFER TO CSI SECTION 260533 FOR CONDUIT INFORMATION.

REV.	DATE	REVISION DESCRIPTION	SHEET NO.
-	-	-	-
-	-	-	-
-	-	-	-
-	-	-	-
-	-	-	-
-	-	-	-

THE INFORMATION, INCLUDING ESTIMATED QUANTITIES OF WORK, SHOWN ON THESE SHEETS IS BASED ON LIMITED INVESTIGATIONS BY THE STATE AND IS IN NO WAY WARRANTED TO INDICATE THE CONDITIONS OF ACTUAL QUANTITIES OF WORK WHICH WILL BE REQUIRED.

Plotted Date: 1/17/2013

DESIGNER/DRAFTER: **NAR**

CHECKED BY: **JSB**

SCALE: ½" = 1'-0"

STATE OF CONNECTICUT
DEPARTMENT OF TRANSPORTATION

Filename: ...\FD_MSH_MEC_118_163_M003.dgn

SIGNATURE/ BLOCK:
OFFICE OF ENGINEERING
APPROVED BY: DATE:

PROJECT TITLE:
ROCKY HILL - GLASTONBURY FERRY OFFICE BUILDING

TOWN: **ROCKY HILL**

DRAWING TITLE: **MECHANICAL PLAN**

PROJECT NO. **118-163**

DRAWING NO. **M-003**

SHEET NO. **08.03**

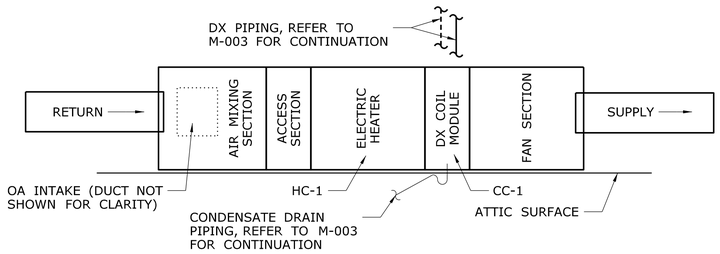

1. THIS DETAIL IS DIAGRAMMATIC ONLY. ARRANGE PIPING TO FACILITATE COIL REMOVAL & NOT TO OBSTRUCT ADJACENT EQUIPMENT.

AIR HANDLING UNIT DETAIL

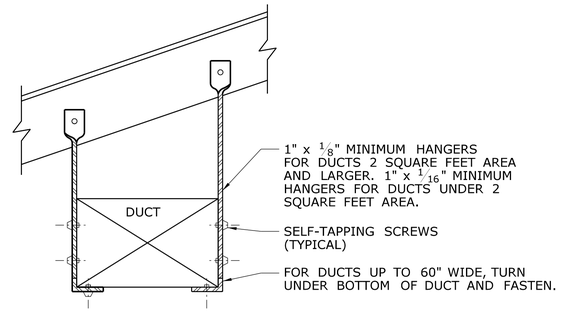

METHOD OF HANGING DUCTWORK

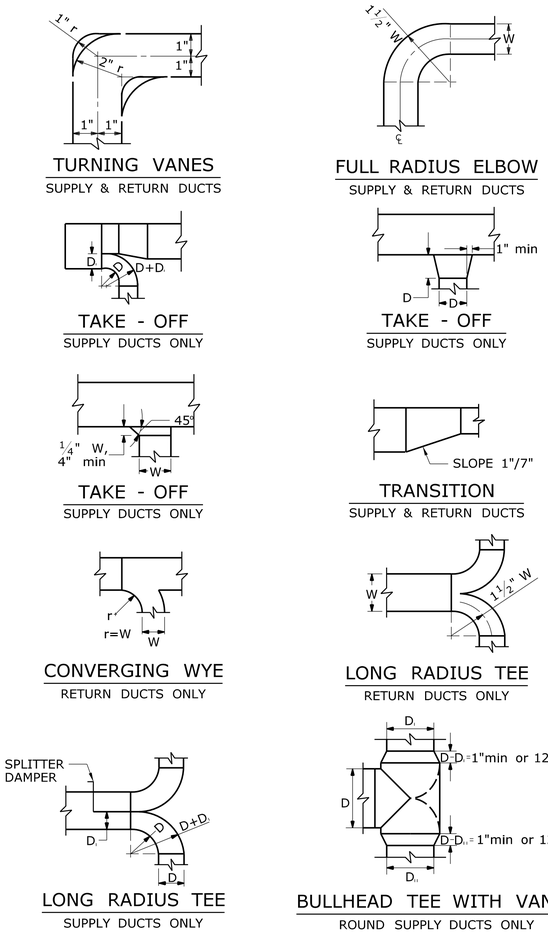

TYPICAL DUCT DETAILS

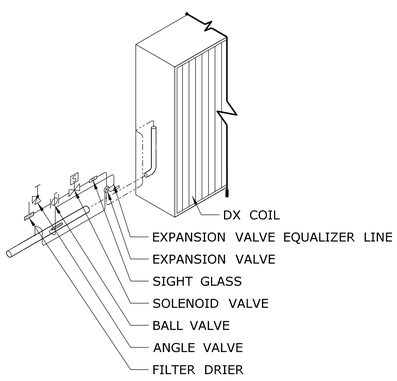

EVAPORATOR PIPING DIAGRAM

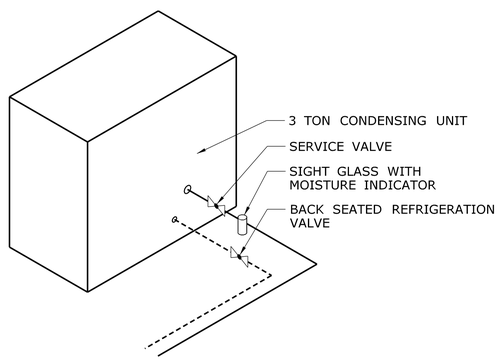

CONDENSER PIPING DIAGRAM

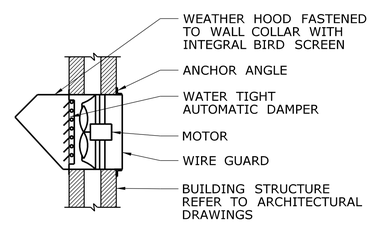

NOTES:

1. PROVIDE ELECTRICAL CONNECTION TO MOTOR WITH FLEXIBLE METAL CONDUIT.
2. PROVIDE RUBBER-IN-SHEAR VIBRATION ELIMINATION PADS AT ALL CORNERS BETWEEN FAN FRAME AND BUILDING STRUCTURE.
3. RIGIDLY ATTACH FAN TO BUILDING STRUCTURE IN ACCORDANCE WITH MANUFACTURER'S RECOMMENDATIONS.

WALL MOUNTED EXHAUST FAN DETAIL

NOTES:

1. PROVIDE REFRIGERANT COMPONENTS AND PIPE SIZES AS REQUIRED BY UNIT MANUFACTURER.
2. FLARE END CONNECTIONS ARE NOT PERMITTED ON REFRIGERANT COMPONENTS.

REV.	DATE	REVISION DESCRIPTION	SHEET NO.
-	-	-	-
-	-	-	-
-	-	-	-
-	-	-	-
-	-	-	-
-	-	-	-

THE INFORMATION, INCLUDING ESTIMATED QUANTITIES OF WORK, SHOWN ON THESE SHEETS IS BASED ON LIMITED INVESTIGATIONS BY THE STATE AND IS IN NO WAY WARRANTED TO INDICATE THE CONDITIONS OF ACTUAL QUANTITIES OF WORK WHICH WILL BE REQUIRED.

Plotted Date: 1/17/2013

DESIGNER/DRAFTER: NAR
CHECKED BY: JSB
NOT TO SCALE

STATE OF CONNECTICUT
DEPARTMENT OF TRANSPORTATION

Filename: ...\FD_MSH_MEC_118_163_M004.dgn

SIGNATURE/BLOCK: OFFICE OF ENGINEERING
APPROVED BY: DATE:

PROJECT TITLE: ROCKY HILL - GLASTONBURY FERRY OFFICE BUILDING

TOWN: ROCKY HILL

DRAWING TITLE: TYPICAL HVAC DETAILS

PROJECT NO. 118-163
DRAWING NO. M-004
SHEET NO. 08.04

AIR HANDLING UNIT SCHEDULE

MARK	AREA SERVED	MODEL NO.	CFM	OA CFM	COOLING LOAD		HEATING LOAD	SUPPLY FAN				
					SENSIBLE	LATENT		ESP	TSP	RPM	HP	VOLT/PH/HZ
AHU-1	ALL AREAS	CSIA003	1200	202	30.4	6.1	49.70	2.50	4.146	2273	2	240V, 1PH, 60 HZ

NOTES:
1. AHU-1 BASED ON TRANE CO.
2. PROVIDE VIBRATION ISOLATORS
3. TEMPERATURES IN DEGREES - FAHRENHEIT
4. AMBIENT TEMPERATURE = 90 DEGREES

COIL SCHEDULE

MARK	LOCATION	TYPE & MODEL NO.	FINS/FT	MBH	CFM	EAT	LAT	APD	FACE VELOCITY (FPM)	LIQ. TEMP	SUCTION TEMP	POWER REQ.
HC-1	AHU-1	ELECTRIC	N/A	49.7	1200	45	80.17	0.199	644	N/A	N/A	13.4 kW
CC-1	AHU-1	TYPE UF - 6 ROW	138	45.53	1200	78DB, 67WB	55DB, 54.78WB	0.548	411	115	45.00	N/A

NOTES:
1. BASED ON TRANE CO.
2. TEMPERATURES ARE IN DEGREES - FAHRENHEIT

CONDENSING UNIT SCHEDULE

MARK	AREA SERVED	EQUIPMENT SERVED	MODEL NO.	TONS	REFRIG.	NO. OF CIRCUITS	SEER	MOTOR	VOLT/PH/HZ
CU-1	ALL AREAS	AHU-1	4TTA3036A1	3	R-410A	1	13.0	1/5 HP	240V, 1PH, 60 HZ

NOTES: 1. BASED ON TRANE CO. 2. PROVIDE WITH LOW AMBIENT CONTROLS

DIFFUSER SCHEDULE

MARK	LOCATION	FACE	DIMENSION	MOUNTING	MODEL	CFM	PATTERN
D1	UNISEX RESTROOM	SQ	6" x 6"	FL	G2	75	2 - W
D2	KITCHEN	SQ	12" x 12"	FL	A4	303	4 - W
D3	LEAD CAPTAIN'S OFFICE	SQ	9" x 9"	FL	G2	212	2 - W
D4	OFFICE SPACE	SQ	12" x 12"	FL	A4	483	4 - W
D5	FERRY REPAIR/MAINT.	SQ	9" x 9"	FL	A4	127	4 - W

NOTES:
1. BASED ON TITUS.
2. DIMENSIONS ARE BASED ON NECK AREA

RETURN GRILLE SCHEDULE

MARK	LOCATION	DIMENSION	CFM
RG1	KITCHEN	10" x 10"	266
RG2	LEAD CAPTAIN'S OFFICE	8" x 8"	191
RG3	OFFICE SPACE	14" x 14"	435

NOTES:
1. BASED ON TITUS.
2. DIMENSIONS ARE BASED ON CORE AREA.

EXHAUST FAN SCHEDULE

MARK	AREA SERVED	TYPE & MODEL NO.	CFM	SP"	FAN RPM	MOTOR
AF-1	UNISEX RESTROOM	8SP15D	83	0.125	1450	1/80HP, 115V, 1PH, 60HZ
EF-1	FERRY REPAIR/MAINT.	SWB-106	220	1	1906	0.13HP, 115V, 1PH, 60HZ

NOTES:
1. AF-1 BASED ON LOREN COOK. EF-1 BASED ON GREENHECK.

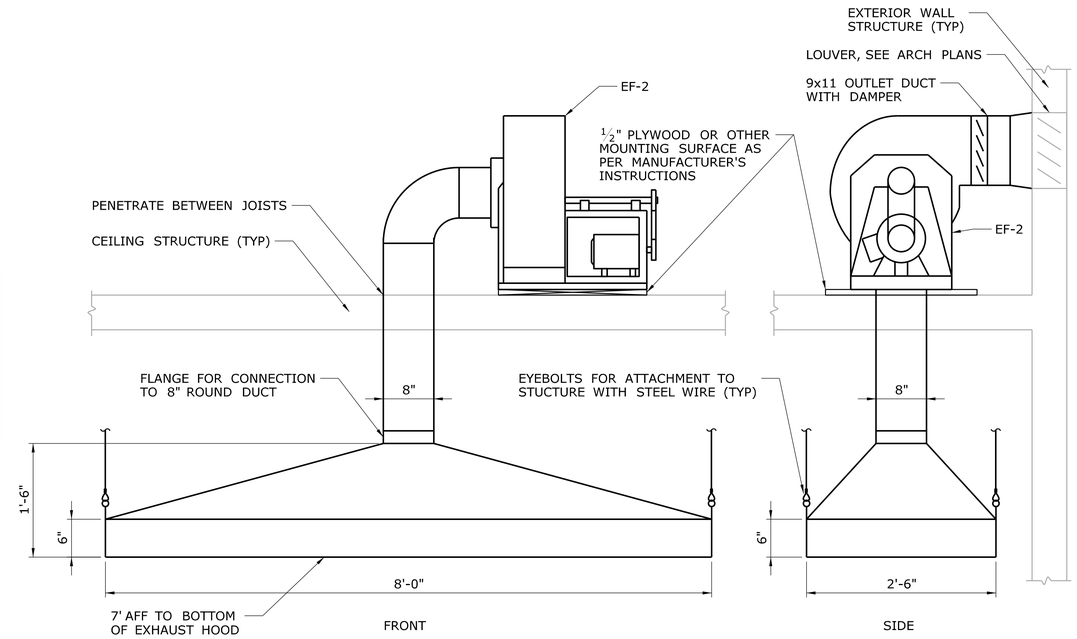

NOTE: HOOD SHALL BE CONSTRUCTED OF ALL WELDED 18 GA. GALVANIZED STEEL

EXHAUST HOOD DETAIL

NOT TO SCALE

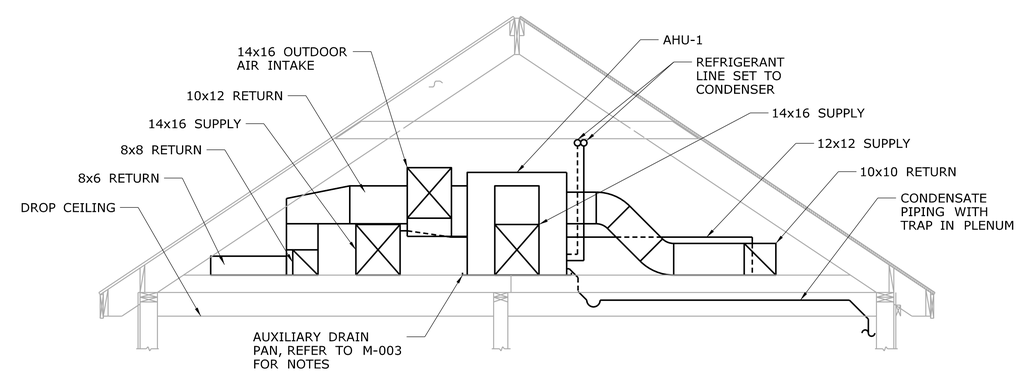

NOTE: FLEXIBLE DUCT AND DROPS TO DIFFUSERS/GRILLES NOT SHOWN

ATTIC SECTION DETAIL

2
M-003

SCALE: 1/2" = 1'-0"

REV.	DATE	REVISION DESCRIPTION	SHEET NO.
-	-	-	-
-	-	-	-
-	-	-	-
-	-	-	-
-	-	-	-
-	-	-	-

THE INFORMATION, INCLUDING ESTIMATED QUANTITIES OF WORK, SHOWN ON THESE SHEETS IS BASED ON LIMITED INVESTIGATIONS BY THE STATE AND IS IN NO WAY WARRANTED TO INDICATE THE CONDITIONS OF ACTUAL QUANTITIES OF WORK WHICH WILL BE REQUIRED.

Plotted Date: 1/17/2013

DESIGNER/DRAFTER: NAR
CHECKED BY: JSB
SCALE AS NOTED

STATE OF CONNECTICUT
DEPARTMENT OF TRANSPORTATION

Filename: ...\FD_MSH_MEC_118_163_M005.dgn

SIGNATURE/BLOCK: OFFICE OF ENGINEERING
APPROVED BY: DATE:

PROJECT TITLE: ROCKY HILL - GLASTONBURY FERRY OFFICE BUILDING

TOWN: ROCKY HILL

DRAWING TITLE: MECHANICAL SCHEDULES AND HVAC DETAILS

PROJECT NO. 118-163
DRAWING NO. M-005
SHEET NO. 08.05