04 - CIVIL
INDEX OF DRAWINGS

DRAWING NUMBER	DRAWING TITLE	DRAWING NUMBER	DRAWING TITLE
C-001	INDEX OF DRAWINGS		
C-002	SITE AND UTILITY PLAN - 1		
C-003	SITE AND UTILITY PLAN - 2		
C-004	GRADING PLAN		
C-005	CIVIL DETAILS		

THE DESIGN APPEARS TO CONFORM TO APPLICABLE CRITERIA. APPROVAL IS NOT TO BE CONSTRUED TO MEAN THAT ALL ASPECTS OF THE DESIGN HAVE BEEN PERSONALLY CHECKED BY THE UNDERSIGNED.

Theodore H. Nezames
2013.05.08
08:29:20-04'00'

TRANSPORTATION PRINCIPAL ENGINEER

REV.	DATE	REVISION DESCRIPTION	SHEET NO.
-	-	-	-
-	-	-	-
-	-	-	-
-	-	-	-
-	-	-	-
-	-	-	-

THE INFORMATION, INCLUDING ESTIMATED QUANTITIES OF WORK, SHOWN ON THESE SHEETS IS BASED ON LIMITED INVESTIGATIONS BY THE STATE AND IS IN NO WAY WARRANTED TO INDICATE THE CONDITIONS OF ACTUAL QUANTITIES OF WORK WHICH WILL BE REQUIRED.

Plotted Date: 1/15/2013

DESIGNER/DRAFTER:

CHECKED BY:

SCALE AS NOTED

STATE OF CONNECTICUT
DEPARTMENT OF TRANSPORTATION

Filename: ...\FD_MSH_CIV_0118_0163_C001.dgn

SIGNATURE/ BLOCK:

OFFICE OF ENGINEERING

APPROVED BY:

PROJECT TITLE:

ROCKY HILL-GLASTONBURY
FERRY OFFICE BUILDING PROJECT

TOWN: ROCKY HILL

DRAWING TITLE: CIVIL INDEX OF DRAWINGS

PROJECT NO. 118-0163

DRAWING NO. C-001

SHEET NO. 04.01

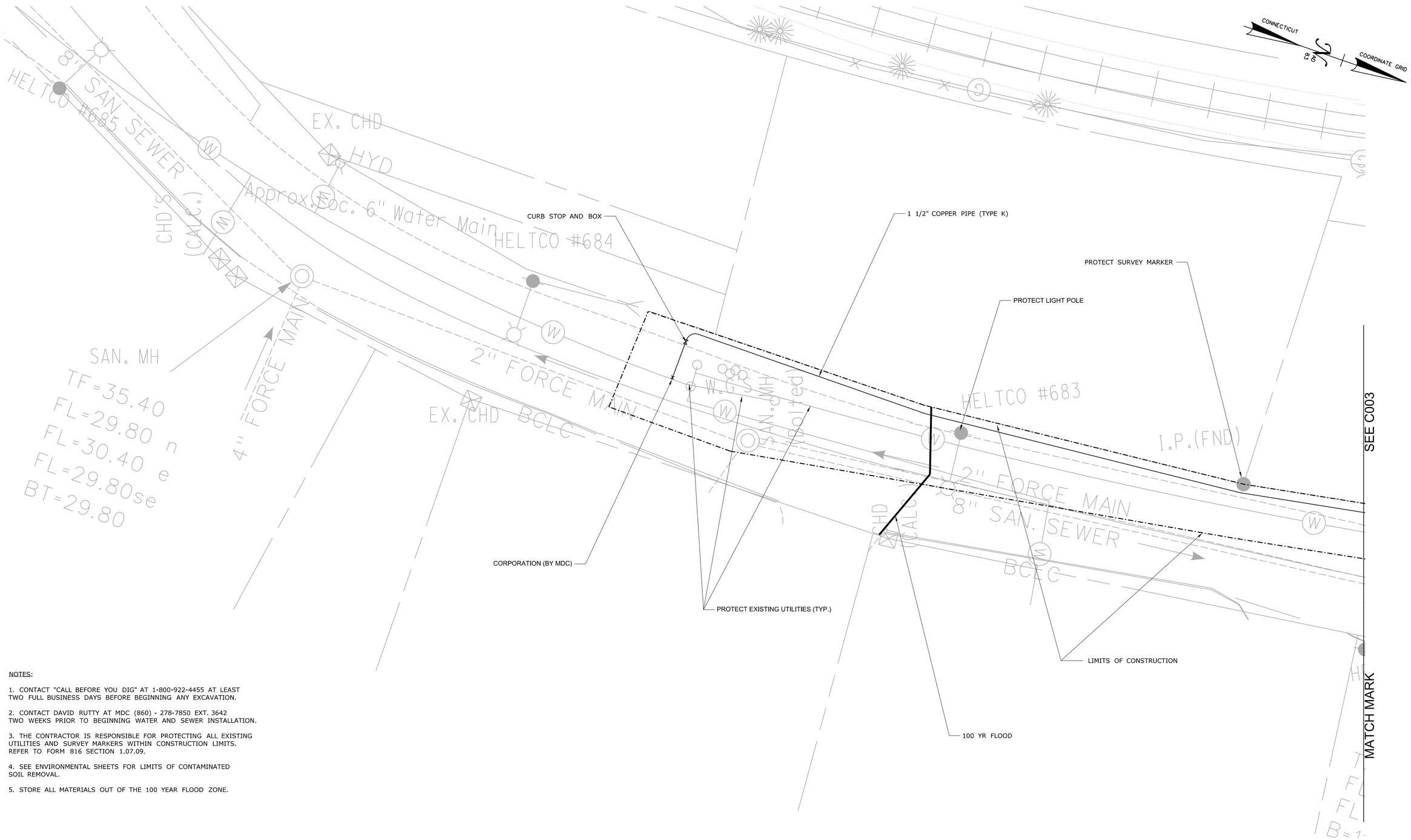

NOTES:

1. CONTACT "CALL BEFORE YOU DIG" AT 1-800-922-4455 AT LEAST TWO FULL BUSINESS DAYS BEFORE BEGINNING ANY EXCAVATION.

2. CONTACT DAVID RUTTY AT MDC (860) - 278-7850 EXT. 3642 TWO WEEKS PRIOR TO BEGINNING WATER AND SEWER INSTALLATION.

3. THE CONTRACTOR IS RESPONSIBLE FOR PROTECTING ALL EXISTING UTILITIES AND SURVEY MARKERS WITHIN CONSTRUCTION LIMITS. REFER TO FORM 816 SECTION 1.07.09.

4. SEE ENVIRONMENTAL SHEETS FOR LIMITS OF CONTAMINATED SOIL REMOVAL.

5. STORE ALL MATERIALS OUT OF THE 100 YEAR FLOOD ZONE.

REV.	DATE	REVISION DESCRIPTION	SHEET NO.
-	-	-	-
-	-	-	-
-	-	-	-
-	-	-	-
-	-	-	-
-	-	-	-

THE INFORMATION, INCLUDING ESTIMATED QUANTITIES OF WORK, SHOWN ON THESE SHEETS IS BASED ON LIMITED INVESTIGATIONS BY THE STATE AND IS IN NO WAY WARRANTED TO INDICATE THE CONDITIONS OF ACTUAL QUANTITIES OF WORK WHICH WILL BE REQUIRED.

Plotted Date: 1/22/2013

DESIGNER/DRAFTER: LM

CHECKED BY: SLM

SCALE IN FEET 0 10 20

SCALE 1"=10'

STATE OF CONNECTICUT
DEPARTMENT OF TRANSPORTATION

Filename: ...\FD_MSH_CIV_0118_0163_C002.dgn

SIGNATURE/ BLOCK: OFFICE OF ENGINEERING

APPROVED BY: DATE:

PROJECT TITLE: ROCKY HILL-GLASTONBURY FERRY OFFICE BUILDING

TOWN: ROCKY HILL

DRAWING TITLE: SITE AND UTILITY PLAN-1

PROJECT NO. 118-0163

DRAWING NO. C002

SHEET NO. 04.02

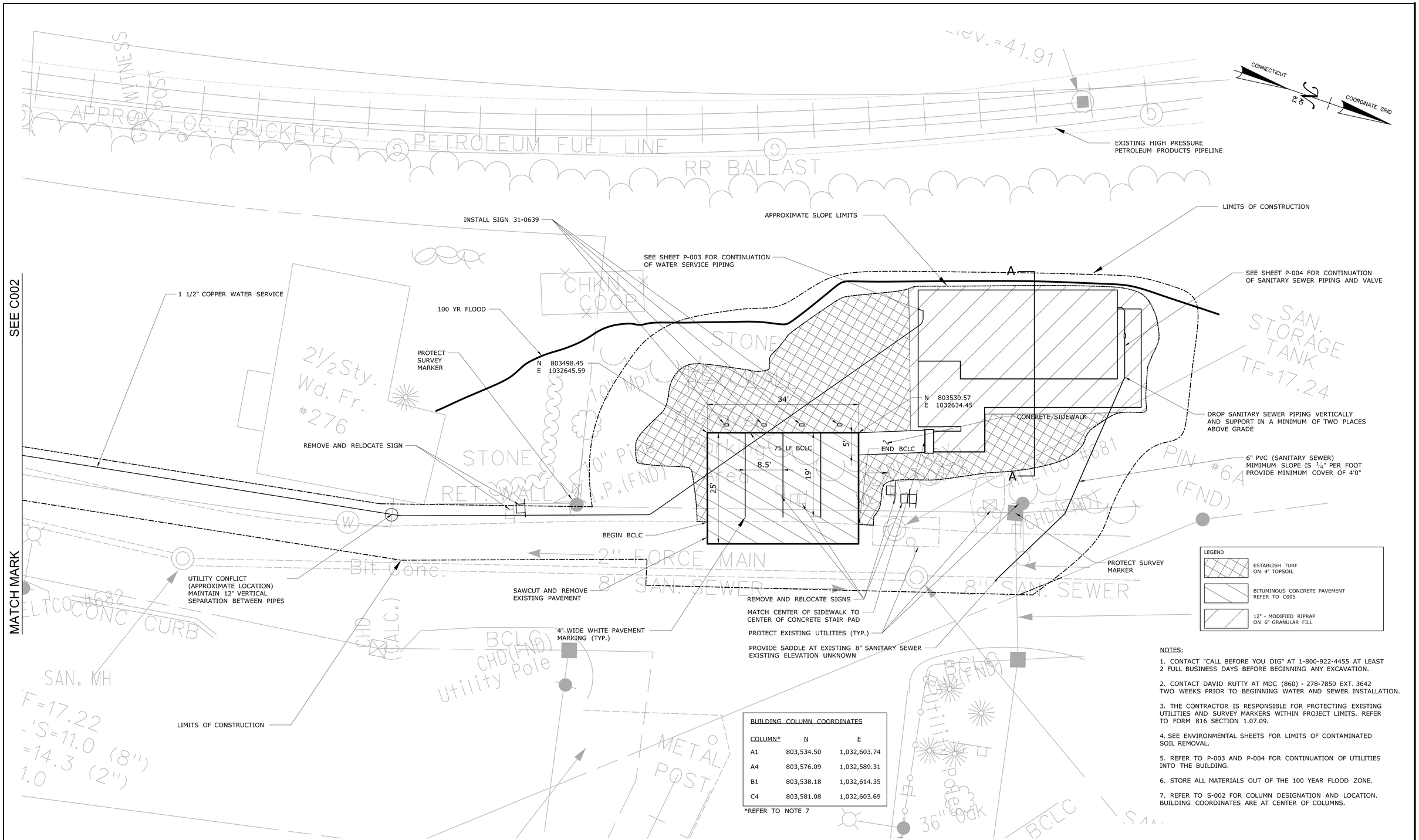

BUILDING COLUMN COORDINATES

COLUMN*	N	E
A1	803,534.50	1,032,603.74
A4	803,576.09	1,032,589.31
B1	803,538.18	1,032,614.35
C4	803,581.08	1,032,603.69

*REFER TO NOTE 7

NOTES:

1. CONTACT "CALL BEFORE YOU DIG" AT 1-800-922-4455 AT LEAST 2 FULL BUSINESS DAYS BEFORE BEGINNING ANY EXCAVATION.

2. CONTACT DAVID RUTTY AT MDC (860) - 278-7850 EXT. 3642 TWO WEEKS PRIOR TO BEGINNING WATER AND SEWER INSTALLATION.

3. THE CONTRACTOR IS RESPONSIBLE FOR PROTECTING EXISTING UTILITIES AND SURVEY MARKERS WITHIN PROJECT LIMITS. REFER TO FORM 816 SECTION 1.07.09.

4. SEE ENVIRONMENTAL SHEETS FOR LIMITS OF CONTAMINATED SOIL REMOVAL.

5. REFER TO P-003 AND P-004 FOR CONTINUATION OF UTILITIES INTO THE BUILDING.

6. STORE ALL MATERIALS OUT OF THE 100 YEAR FLOOD ZONE.

7. REFER TO S-002 FOR COLUMN DESIGNATION AND LOCATION. BUILDING COORDINATES ARE AT CENTER OF COLUMNS.

REV.	DATE	REVISION DESCRIPTION	SHEET NO.
-	-	-	-
-	-	-	-
-	-	-	-
-	-	-	-
-	-	-	-
-	-	-	-

THE INFORMATION, INCLUDING ESTIMATED QUANTITIES OF WORK, SHOWN ON THESE SHEETS IS BASED ON LIMITED INVESTIGATIONS BY THE STATE AND IS IN NO WAY WARRANTED TO INDICATE THE CONDITIONS OF ACTUAL QUANTITIES OF WORK WHICH WILL BE REQUIRED.

Plotted Date: 3/6/2013

DESIGNER/DRAFTER: LM
CHECKED BY: SLM
SCALE IN FEET 0 10 20
SCALE 1"=10'

STATE OF CONNECTICUT
DEPARTMENT OF TRANSPORTATION

Filename: ...\FD_MSH_CIV_0118_0163_C003.dgn

SIGNATURE/BLOCK: OFFICE OF ENGINEERING
APPROVED BY:

PROJECT TITLE: ROCKY HILL-GLASTONBURY FERRY OFFICE BUILDING

TOWN: ROCKY HILL

DRAWING TITLE: SITE AND UTILITY PLAN-2

PROJECT NO. 118-0163
DRAWING NO. C003
SHEET NO. 04.03

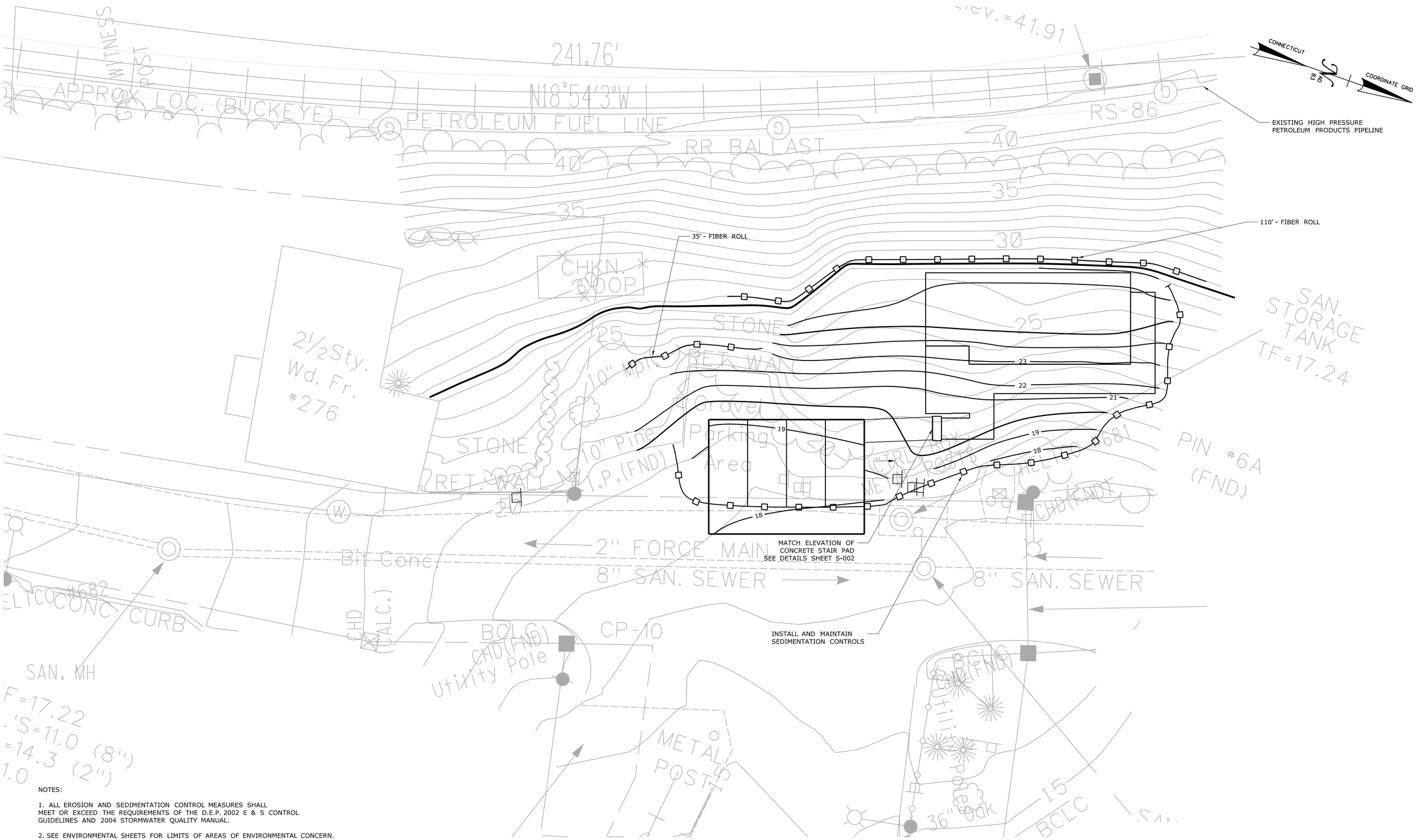

NOTES:

1. ALL EROSION AND SEDIMENTATION CONTROL MEASURES SHALL MEET OR EXCEED THE REQUIREMENTS OF THE D.E.P. 2002 E & S CONTROL GUIDELINES AND 2004 STORMWATER QUALITY MANUAL.

2. SEE ENVIRONMENTAL SHEETS FOR LIMITS OF AREAS OF ENVIRONMENTAL CONCERN.

REV.	DATE	REVISION DESCRIPTION	SHEET NO.
-	-	-	-
-	-	-	-
-	-	-	-
-	-	-	-
-	-	-	-
-	-	-	-

THE INFORMATION, INCLUDING ESTIMATED QUANTITIES OF WORK, SHOWN ON THESE SHEETS IS BASED ON LIMITED INVESTIGATIONS BY THE STATE AND IS IN NO WAY WARRANTED TO INDICATE THE CONDITIONS OF ACTUAL QUANTITIES OF WORK WHICH WILL BE REQUIRED.

Plotted Date: 1/25/2013

DESIGNER/DRAFTER: **LM**

CHECKED BY: **SLM**

SCALE IN FEET 0 10 20

SCALE 1"=10'

STATE OF CONNECTICUT
DEPARTMENT OF TRANSPORTATION

Filename: ...\FD_MSH_GRD_0118_0163_C004.dgn

SIGNATURE/ BLOCK:

OFFICE OF ENGINEERING

APPROVED BY: DATE:

PROJECT TITLE:

ROCKY HILL-GLASTONBURY FERRY OFFICE BUILDING

TOWN: **ROCKY HILL**

DRAWING TITLE: **GRADING PLAN**

PROJECT NO. **118-0163**

DRAWING NO. **C004**

SHEET NO. **04.04**

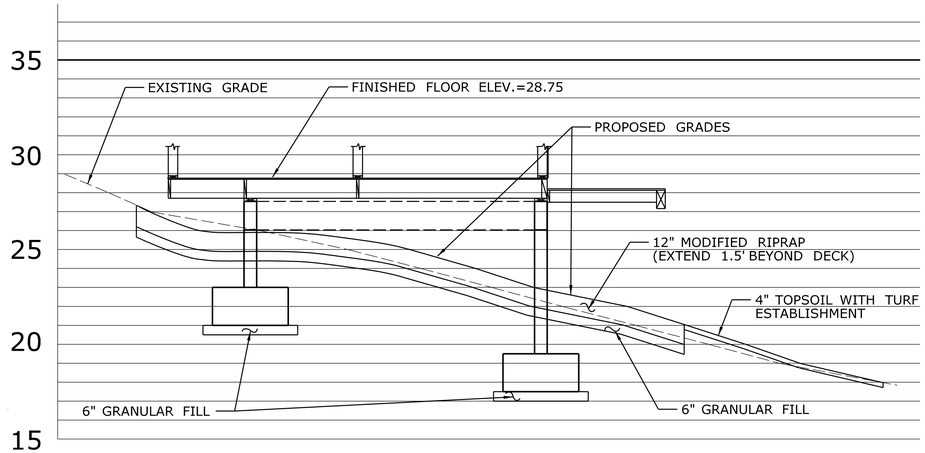

SECTION A-A ON SHEET C003

1H : 1V

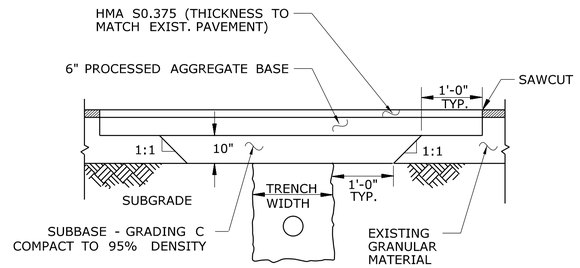

NOTES:

1. FOR TRENCH IN GRASS AREA, PROVIDE 4" OF TOPSOIL WITH TURF ESTABLISHMENT ABOVE TRENCH.

TRENCH REPAIR

NOT TO SCALE

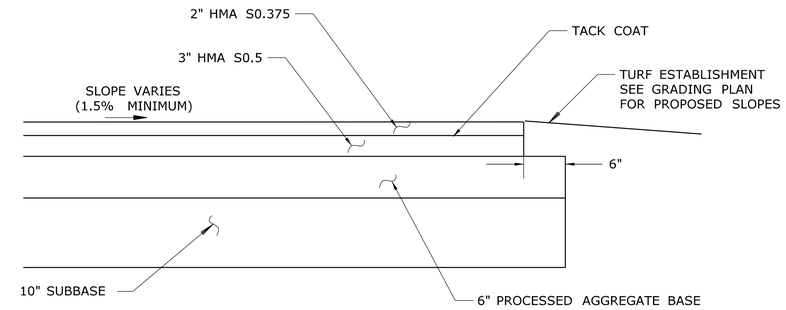

BITUMINOUS CONCRETE PAVEMENT

NOT TO SCALE

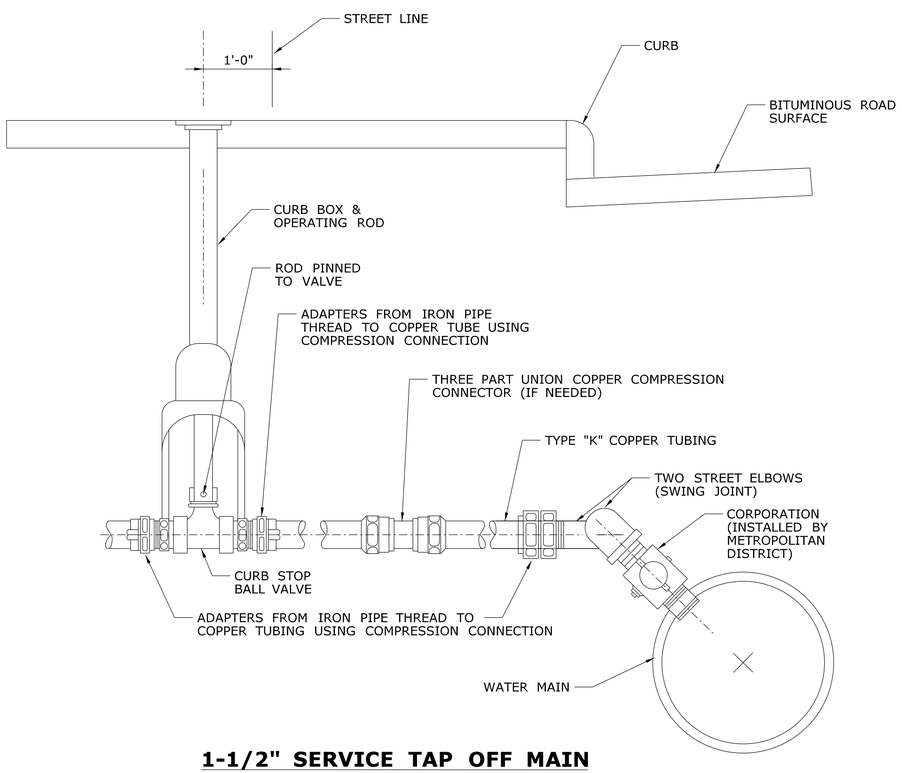

1-1/2" SERVICE TAP OFF MAIN

NOT TO SCALE

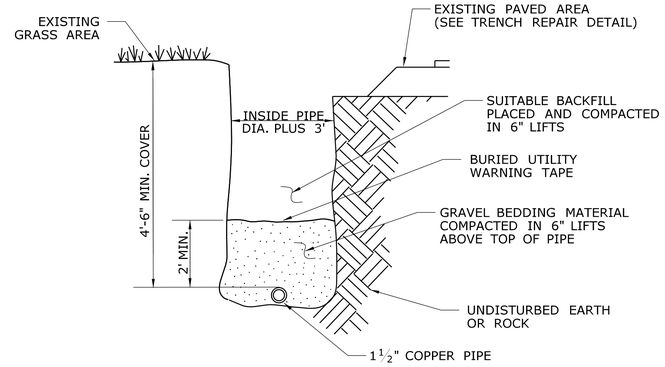

TYPICAL WATER SERVICE TRENCH SECTION

NOT TO SCALE

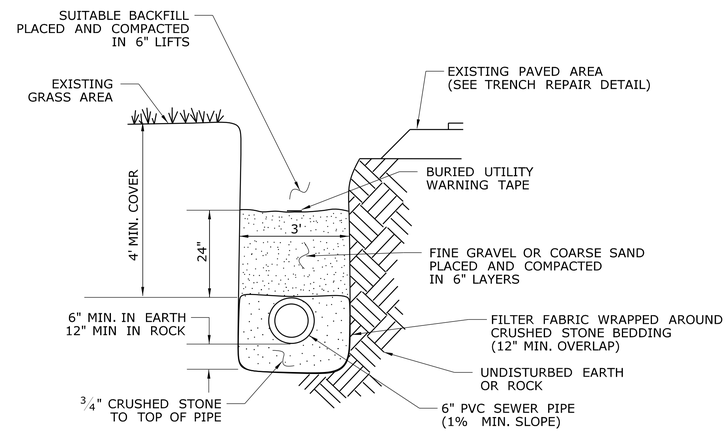

TYPICAL SEWER SERVICE TRENCH SECTION

NOT TO SCALE

REV.	DATE	REVISION DESCRIPTION	SHEET NO.
-	-	-	-
-	-	-	-
-	-	-	-
-	-	-	-
-	-	-	-
-	-	-	-

THE INFORMATION, INCLUDING ESTIMATED QUANTITIES OF WORK, SHOWN ON THESE SHEETS IS BASED ON LIMITED INVESTIGATIONS BY THE STATE AND IS IN NO WAY WARRANTED TO INDICATE THE CONDITIONS OF ACTUAL QUANTITIES OF WORK WHICH WILL BE REQUIRED.

Plotted Date: 1/22/2013

DESIGNER/DRAFTER: LM

CHECKED BY: SLM

SCALE AS NOTED

STATE OF CONNECTICUT
DEPARTMENT OF TRANSPORTATION

Filename: ...\FD_MSH_DET_0118_0163_C005.dgn

SIGNATURE/BLOCK: OFFICE OF ENGINEERING

APPROVED BY: DATE:

PROJECT TITLE: ROCKY HILL GLASTONBURY FERRY OFFICE BUILDING

TOWN: ROCKY HILL

DRAWING TITLE: CIVIL DETAILS

PROJECT NO. 118-0163

DRAWING NO. C005

SHEET NO. 04.05