9 - ELECTRICAL
INDEX OF DRAWINGS

DRAWING NUMBER	DRAWING TITLE	DRAWING NUMBER	DRAWING TITLE
E-001	9 ELECTRICAL INDEX OF DRAWINGS		
E-002	SYMBOLS,ABBREVIATIONS,AND GENERAL NOTES		
E-003	ELECTRICAL SITE PLAN		
E-004	LIGHTING PLAN		
E-005	POWER AND FIRE ALARM PLAN		
E-006	ATTIC POWER AND LIGHTING PLAN		
E-007	PANEL SCHEDULE ONE-LINE DIAGRAM		
E-008	ELECTRICAL DETAILS 1		
E-009	ELECTRICAL DETAILS 2		
E-010	ELECTRICAL DETAILS 3		

THE DESIGN APPEARS TO CONFORM TO APPLICABLE CRITERIA. APPROVAL IS NOT TO BE CONSTRUED TO MEAN THAT ALL ASPECTS OF THE DESIGN HAVE BEEN PERSONALLY CHECKED BY THE UNDERSIGNED.

Theodore H. Nezames
2013.05.08
08:47:45-04'00'

TRANSPORTATION PRINCIPAL ENGINEER

REV.	DATE	REVISION DESCRIPTION	SHEET NO.
-	-	-	-
-	-	-	-
-	-	-	-
-	-	-	-
-	-	-	-
-	-	-	-

THE INFORMATION, INCLUDING ESTIMATED QUANTITIES OF WORK, SHOWN ON THESE SHEETS IS BASED ON LIMITED INVESTIGATIONS BY THE STATE AND IS IN NO WAY WARRANTED TO INDICATE THE CONDITIONS OF ACTUAL QUANTITIES OF WORK WHICH WILL BE REQUIRED.

Plotted Date: 1/17/2013

DESIGNER/DRAFTER: SKW
CHECKED BY: JMK
NO SCALE

STATE OF CONNECTICUT
DEPARTMENT OF TRANSPORTATION

Filename: ...\FD_MST_ELE_0118_0163_E001Index.dgn

SIGNATURE/BLOCK: OFFICE OF ENGINEERING
APPROVED BY:

PROJECT TITLE: ROCKY HILL-GLASTONBURY FERRY OFFICE BUILDING

TOWN: ROCKY HILL

DRAWING TITLE: 9 ELECTRICAL INDEX OF DRAWINGS

PROJECT NO. 118-0163
DRAWING NO. E-001
SHEET NO. 09.01

Connecticut Department of Transportation
QA/QC Format Check
PASS

POWER SYMBOLS

225 AF / 200 AT	MOLDED CASE CIRCUIT BREAKER 225A FRAME RATING 200A TRIP RATING
	GROUND CONNECTION
	120/240V POWER/LIGHTING PANEL
SPD	SURGE PROTECTIVE DEVICE
FACP	FIRE ALARM CONTROL PANEL
GFI	GROUND FAULT INTERRUPTER, QUADRUPLEX RECEPTACLE, 20A,125V. 42" AFF UNLESS OTHERWISE INDICATED
	DUPLEX RECEPTACLE, 20A, 125V
WP GFI	GROUND FAULT INTERRUPTER, DUPLEX RECEPTACLE, 20A,125V WITH IN-USE, WEATHERPROOF COVER.
GFI	GROUND FAULT INTERRUPTER, DUPLEX RECEPTACLE, 20A,125V.
J J	JUNCTION BOX
PB	PULL BOX
	DISCONNECT SWITCH (TYPE: HEAVY DUTY)
	OVERHEAD CONDUCTORS
	UNDERGROUND GROUNDING LOOP
	UNDERGROUND CONDUIT
	CONDUIT EXPOSED
LP1-3	HOMERUN, LP1-3 DENOTES LIGHTING PANEL NO. 1, CIRCUIT #3
	EXISTING UTILITY POLE
	PROPOSED UTILITY POLE
M WP GFI	EXHAUST FAN W/ GFI
M 2	MOTOR (NUMBER DENOTES HORSEPOWER)
	MOTOR STARTER
	COMBINATION MOTOR STARTER
30A	DISCONNECT SWITCH, AMPERE RATING AS INDICATED
F 30A	FUSED DISCONNECT SWITCH, AMPERE RATING AS INDICATED

FIRE ALARM SYMBOLS

F	FIRE ALARM WITH STROBE LIGHT- SURFACE MOUNTED
F	FIRE ALARM HORN WITH STROBE LIGHT- SURFACE MOUNTED
WP F	WEATHERPROOF FIRE ALARM HORN WITH STROBE LIGHT- SURFACE MOUNTED
F	FIRE ALARM PULL STATION - SURFACE MOUNTED
H F	HEAT DETECTOR, F - DENOTES FIXED HIGH-TEMPERATURE DETECTOR THAT ACTIVATES AT 190F.
SD	SMOKE DETECTOR IONIZATION TYPE
	DUCT MOUNTED SMOKE DETECTOR TO BE FURNISHED, WIRED, AND CONNECTED BY THE ELECTRICAL INSTALLER.

LIGHT FIXTURE SYMBOLS

PC	PHOTOCELL
S	SWITCH BOX WITH SINGLE AUTO/MANUAL SWITCH
A a LP1-3	PENDANT MOUNTED VAPORTIGHT FLUORESCENT FIXTURE ("A" INDICATES FIXTURE TYPE, "LP1-3" INDICATED PANEL AND CIRCUIT NUMBER, "a" INDICATES SWITCH CIRCUIT)
LP1-8 D a	WALL MOUNTED LED (LED LIGHTING FIXTURE "D" INDICATES FIXTURE TYPE, "LP2-7" INDICATES PANEL AND CIRCUIT NUMBER, "a" INDICATES SWITCHING CIRCUIT)
B, B1,B2E a LP2-3	RECESS MOUNTED FLUORESCENT FIXTURE ("B", "B1",AND "B2E" INDICATES FIXTURE TYPE, "LP2-3" INDICATES PANEL AND CIRCUIT NUMBER, AND CIRCUIT NUMBER,"a" INDICATES SWITCHING CIRCUIT)
I	MIRROR LIGHT LUMINAIRE (LETTER INDICATES FIXTURE TYPE)
C	CEILING MOUNTED INCANDESCENT FIXTURE (LETTER INDICATES FIXTURE TYPE).
X	ARROW INDICATES EXIT SIGN WITH DIRECTIONAL ARROW WALL MOUNTED LED EXIT SIGN WITH SELF-CONTAINED NI-CAD BATTERY PACK AND CHARGER. "X" INDICATES FIXTURE TYPE.
EM	EMERGENCY LIGHTING UNIT WITH BATTERY PACK
EMR	WEATHERPROOF BATTERY EGRESS REMOTE HEAD
ES PB	EMERGENCY STOP PUSH BUTTON STATION

SWITCH CONTROL SYMBOLS

S_{TP}	MANUAL STARTER WITH THERMAL PROTECTION AND PILOT LIGHT
Sk_{3b}	KEY LOCK SWITCH, 3-WAY, "b" INDICATES SWITCHING CIRCUIT
Sa	SWITCH,SINGLE POLE, "a" INDICATES SWITCHING CIRCUIT
S_{3b}	SWITCH, 3-WAY, "b" INDICATES SWITCHING CIRCUIT
S_{4b}	SWITCH, 4-WAY, "b" INDICATING SWITCHING CIRCUIT
S_2	SWITCH, 2 POLE

OCCUPANCY SENSORS

DEVICE	DESCRIPTION
500	CEILING MOUNTED MULTI-TECHNOLOGY, 500 SQ FT
1000	CEILING MOUNTED MULTI-TECHNOLOGY, 1000 SQ FT
a M S	WALL SWITCH MULTI-TECHNOLOGY, SELF POWERED "a" INDICATES SWITCHING CIRCUIT
	WALL MOUNTED MULTI-TECHNOLOGY OCCUPANCY SENSOR
	OCCUPANCY SENSOR POWER PACK
	WALL MOUNTED PIR OUTDOOR MOTION SENSOR

ABBREVIATIONS

A	AMPERE
AFF	ABOVE FINISHED FLOOR
AFG	ABOVE FINISHED GRADE
AF-X	FAN, AXIAL FLOW
AUTO	AUTOMATIC
AIC	AMPS INTERRUPTING CAPACITY
ATS	AUTOMATIC TRANSFER SWITCH
AWG	AMERICAN WIRING GAUGE
BLDG	BUILDING
BRK.	BREAKER
C	CONDUIT
CKT.	CIRCUIT
COL.	COLUMN
CU	COPPER
DISC.	DISCONNECT
DP1	FUEL POWER PANEL
DWG	DRAWING
EF	EXHAUST FAN
ELEC.	ELECTRICAL
EUH	ELECTRICAL UNIT HEATER
FA	FIRE ALARM
FACP	FIRE ALARM CONTROL PANEL
FL	FLOOR
G.C.	GENERAL CONTRACTOR
GEN	GENERATOR
GFI	GROUND-FAULT INTERRUPTER
G, GND	GROUND
HP	HORSEPOWER
HPS	HIGH PRESSURE SODIUM
HT.	HEIGHT
HTR	HEATER
HZ	HERTZ
IN.	INCH
JB	JUNCTION BOX
kVA	KILOVOLT AMPERE
kW	KILOWATTS
LP	LIGHTING PANEL
MDP	MAIN DISTRIBUTION POWER PANEL
MECH	MECHANICAL
MH	METAL HALIDE
MTG. HT.	MOUNTING HEIGHT
NEC	NATIONAL ELECTRICAL CODE
N.C.	NORMALLY CLOSED
N.O.	NORMALLY OPEN
O.C.	ON CENTER
P.B.	PUSH BUTTON
P.V.C.	POLYVINYL CHLORIDE CONDUIT
PF	POWER FACTOR
PP	POWER PANEL
PNL	PANEL
RM	ROOM
RECEPT	RECEPTACLE
RGS	RIGID GALVANIZED STEEL
SPECS	SPECIFICATIONS
S	SWITCH, SINGLE POLE
SW	SWITCH
3PH	THREE PHASE
3P	THREE POLE
TYP.	TYPICAL
UH	ELECTRIC UNIT HEATER
V	VOLT
W	WATT OR WIRE
WP	WEATHERPROOF
XFMR	TRANSFORMER

GENERAL NOTES:

1. MINIMUM SIZE WIRE FOR POWER AND LIGHTING PANELS CIRCUITS SHALL BE #12 AWG. BRANCH CIRCUITS EXCEEDING 100 FEET IN LENGTH SHALL BE #10 AWG. WIRING SIZE SHALL BE ADJUSTED AS NECESSARY TO REFLECT AMPACITY DERATING DUE TO NUMBER OF LOADED CONDUCTORS SHARING A PARTICULAR RACEWAY. MINIMUM CONDUIT SIZE SHALL BE $^3/_4$" AS OUTLINED IN SPECIFICATION SECTION 260533.
2. INTERRUPTING CAPACITY OF ELECTRICAL EQUIPMENT SHALL BE EQUAL TO OR GREATER THAN THE AVAILABLE SHORT-CIRCUIT CURRENT AT ITS SUPPLY TERMINAL.
3. INSTALLERS SHALL, IN A WORKMANLIKE MANNER, PROVIDE COMPLETE OPERABLE SYSTEMS.
4. INSTALLER SHALL COORDINATE ALL WORK WITH OTHER DIVISION TRADES, LOCATE FIXTURES, DEVICES, ETC, IN ORDER TO AVOID INTERFERENCE.
5. ALL FEEDER AND BRANCH CIRCUITS SHALL HAVE AN EQUIPMENT GROUND CONDUCTOR INCLUDED WITH PHASE WIRING.
6. CONDUIT ROUTING SHOWN ON THE PLANS ARE ONLY DIAGRAMMATIC IN NATURE.
7. ALL CIRCUITS SHALL HAVE SEPARATE NEUTRAL CONDUCTOR FROM ELECTRICAL PANELS.
8. ALL PANELBOARDS SHALL BE MOUNTED ON 3/4" FIRE RETARDANT PLYWOOD, TREATED ON ALL SIDES, AND PAINTED WITH TWO COATS OF BLACK LAYER ENAMEL ON ALL SIDES.
9. PATCH AROUND ALL ELECTRICAL CONDUIT PENETRATIONS THROUGH WALLS.
10. COMMUNICATION OUTLETS SHALL BE INSTALLED AND WIRED IN ACCORDANCE WITH EIA/TIA-568 STANDARDS.
11. ALL CONDUITS AND BOXES IN OFFICE CORE AREA SHALL BE CONCEALED.
12. THE SPACE EQUAL TO THE WIDTH AND DEPTH OF SERVICE EQUIPMENT, SWITCHBOARDS, PANEL BOARDS, AND MOTOR CONTROL CENTERS EXTENDING UP FROM THE FLOOR TO A HEIGHT OF 6' ABOVE THE EQUIPMENT OR TO THE STRUCTURAL CEILING, WHICHEVER IS LOWER, SHALL BE DEDICATED TO THE ELECTRICAL INSTALLATION. FOREIGN SYSTEMS (SUCH AS WATER PIPING) INSTALLED DIRECTLY ABOVE THE DEDICATED SPACE MUST INCLUDE PROTECTIVE EQUIPMENT THAT INSURES THAT OCCURRENCES SUCH AS LEAKS, CONDENSATION, AND BREAKS DO NOT DAMAGE ELECTRICAL EQUIPMENT BELOW. SEE NEC ARTICLE 110.26 FOR FURTHER DETAILS.
14. CONDUCTORS FOR ALL THE ELECTRICAL SYSTEMS SHALL BE RUN IN CONDUIT NO EXPOSED CONDUCTORS SHALL BE ALLOWED UNLESS WHERE SPECIFICALLY NOTED OTHERWISE.
15. ALL MAIN CIRCUIT BREAKERS AND BRANCH CIRCUIT BREAKERS SHALL BE FULLY RATED FOR ALL PANELBOARDS.
16. REFER TO DRAWING NO. E-009 FOR THE MOUNTING HEIGHT OF ALL ELECTRICAL APPARATUS UNLESS OTHERWISE NOTED.
17. ENGRAVE EACH RECEPTACLE PLATE WITH PANEL DESIGNATION AND CIRCUIT NUMBER REFER TO SPECIFICATION 260553.
18. ALL EXTERIOR ELECTRICAL EQUIPMENT AND THOSE THAT ARE INDICATED FOR WET LOCATION USE SHALL HAVE AN ENCLOSURE SUITABLE FOR USE IN WET LOCATION. ALL RECEPTACLES SHALL BE PROVIDED WITH "IN-USE" COVERS PER NEC 406.8.

COMMUNICATION SYMBOLS

	COMMUNICATION OUTLET BOX (VOICE AND DATA)
W	COMMUNICATION OUTLET BOX (VOICE AND DATA) "W" DENOTES WALL HUNG TELEPHONE

REV.	DATE	REVISION DESCRIPTION	SHEET NO.
-	-	-	-
-	-	-	-
-	-	-	-
-	-	-	-
-	-	-	-
-	-	-	-

THE INFORMATION, INCLUDING ESTIMATED QUANTITIES OF WORK, SHOWN ON THESE SHEETS IS BASED ON LIMITED INVESTIGATIONS BY THE STATE AND IS IN NO WAY WARRANTED TO INDICATE THE CONDITIONS OF ACTUAL QUANTITIES OF WORK WHICH WILL BE REQUIRED.

Plotted Date: 1/17/2013

DESIGNER/DRAFTER: SKW
CHECKED BY: JMK
NOT TO SCALE

STATE OF CONNECTICUT
DEPARTMENT OF TRANSPORTATION

Filename: ...\FD_MST_ELE_0118_0163_E002.dgn

SIGNATURE/BLOCK: OFFICE OF ENGINEERING
APPROVED BY: DATE:

PROJECT TITLE: ROCKY HILL-GLASTONBURY FERRY OFFICE BUILDING

TOWN: ROCKY HILL

DRAWING TITLE: SYMBOLS, ABBREVIATIONS, AND GENERAL NOTES

PROJECT NO. 118-0163
DRAWING NO. E-002
SHEET NO. 09.02

ELECTRICAL DRAWING NOTES:

1. THE CONTRACTOR SHALL PREPARE A CUSTOMER REQUEST FOR SERVICE (CRS) AND SUBMIT IT TO CONNECTICUT LIGHT AND POWER (CL&P) FOUR (4) WEEKS PRIOR TO THE INITIATION OF PROJECT CONSTRUCTION. THE CONTRACTOR SHALL PROVIDE CL&P THREE (3) WEEKS NOTICE PRIOR TO REQUIRING CL&P TO BEGIN THEIR PORTION OF WORK.

2. CL&P SHALL PROVIDE SERVICE FROM THE EXISTING UTILITY POLE (CL&P #681) TO THE OFFICE BUILDING. CL&P SHALL PROVIDE 200 AMPS 240 VOLTS SINGLE PHASE SERVICE FOR THE OFFICE BUILDING. CL&P IS RESPONSIBLE FOR THE INSTALLATION OF OVERHEAD SERVICE CONDUCTORS FROM THE UTILITY POLE TO THE WEATHERHEAD. THE CONTRACTOR SHALL FURNISH AND INSTALL A CL&P APPROVED WEATHERHEAD. THE CONTRACTOR IS RESPONSIBLE FOR INSTALLING THE SERVICE CONDUIT AND CONDUCTORS BETWEEN THE WEATHERHEAD AND THE METER SOCKET. THE CONTRACTOR SHALL FURNISH AND INSTALL THE SERVICE CONDUIT AND CONDUCTORS FROM THE METER SOCKET TO PANEL PP1.

3. THE CONTRACTOR SHALL FURNISH AND INSTALL A CL&P APPROVED METER SOCKET.

4. THE CONTRACTOR SHALL PROVIDE AT&T THREE (3) WEEKS NOTICE PRIOR TO REQUIRING AT&T TO BEGIN THEIR PORTION OF WORK.

5. AT&T SHALL PROVIDE SERVICE FROM THE EXISTING UTILITY POLE (CL&P #681) TO THE OFFICE BUILDING. AT&T IS RESPONSIBLE FOR THE INSTALLATION OF OVERHEAD SERVICE CONDUCTORS. AT&T IS RESPONSIBLE FOR THE INSTALLATION OF COMMUNICATION ENTRANCE CONDUCTORS. COORDINATE THE INSTALLATION WITH THE UTILITIES.

6. EXCAVATION OF ANY TYPE SHALL BE PERFORMED SO THAT THE EXISTING UNDERGROUND UTILITIES OR STRUCTURES ARE NOT DAMAGED. IT SHALL BE THE CONTRACTOR'S RESPONSIBILITY FOR ANY DAMAGE COSTS RELATED TO THE REPAIR OF DAMAGED UTILITIES. ANY REPAIRS SHALL BE BORNE BY THE CONTRACTOR AT NO ADDITIONAL COST TO THE STATE. THE CONTRACTOR MUST ANTICIPATE POTENTIAL DELAYS CAUSED BY UTILITY WORK AND SCHEDULE THE CONSTRUCTION ACCORDINGLY. CONTRACTOR SHALL CONTACT "CALL BEFORE YOU DIG" PRIOR TO CONSTRUCTION AND BEFORE ANY EXCAVATION TAKES PLACE.

7. SEE DETAIL NOS. 1, 2, AND 4 ON DRAWING NO. E-008 FOR SURFACE MOUNTED CONDUIT ROUTING.

8. SEE DRAWING NO. E-004 FOR EXTERIOR WALL MOUNTED LIGHTING.

REV.	DATE	REVISION DESCRIPTION	SHEET NO.
-	-	-	-
-	-	-	-
-	-	-	-
-	-	-	-
-	-	-	-
-	-	-	-

THE INFORMATION, INCLUDING ESTIMATED QUANTITIES OF WORK, SHOWN ON THESE SHEETS IS BASED ON LIMITED INVESTIGATIONS BY THE STATE AND IS IN NO WAY WARRANTED TO INDICATE THE CONDITIONS OF ACTUAL QUANTITIES OF WORK WHICH WILL BE REQUIRED.

Plotted Date: 1/17/2013

DESIGNER/DRAFTER: SKW

CHECKED BY: JMK

SCALE: 1"=10'

STATE OF CONNECTICUT
DEPARTMENT OF TRANSPORTATION

Filename: ...\FD_MST_ELE_0118_0163_E003.dgn

SIGNATURE/ BLOCK:
OFFICE OF ENGINEERING

APPROVED BY: DATE:

PROJECT TITLE:
ROCKY HILL-GLASTONBURY FERRY OFFICE BUILDING

TOWN: ROCKY HILL

DRAWING TITLE: ELECTRICAL SITE PLAN

PROJECT NO. 118-0163

DRAWING NO. E-003

SHEET NO. 09.03

	NAME	DESCRIPTION	VOLTS	LAMP No.	LAMP TYPE	MOUNTING	BASIS OF DESIGN: MANUFACTURER & CATALOG NUMBER
INTERIOR	A	PREMIUM LOW PROFILE FLUORESCENT LUMINAIRE SUITED FOR WET AND DAMP LOCATION. PRECISION-FORMED HIGH PERFORMANCE, 95% TOTAL REFLECTANCE OPTICS.	120V	2	2-F032/841/XPS/ECO	PENDANT	HOLOPHANE #ENS4132S1BMPCLMVOLTGEB10IS
	B	2'x 4' RECESSED FLUORESCENT TROFFER WITH .125 PATTERN 12 DIFFUSER AND ONE TWO LAMP PROGRAM START BALLAST AND ENHANCED ALUMINUM SPECULAR REFLECTOR.	120V	2	2-F032/841/XPS/ECO	RECESSED	HOLOPHANE #HT24G232A12125120GEB10RS SSR
	BE	SAME AS TYPE 'B' BUT WITH A BATTERY BACKUP BALLAST FOR EMERGENCY EGRESS LIGHTING.	120V	2	2-F032/841/XPS/ECO	RECESSED	HOLOPHANE #HT24G232A12125120GEB10RS EL14 SSREL14
	B2E	2'x 2' RECESSED FLUORESCENT TROFFER WITH .125 PATTERN 12 DIFFUSER AND ONE TWO LAMP PROGRAM START BALLAST AND ENHANCED ALUMINUM SPECULAR REFLECTOR WITH A BATTERY BACKUP BALLAST FOR EMERGENCY EGRESS LIGHTING.	120V	2	2-F017/841XPS/ECO	RECESSED	HOLOPHANE #HT22G217A12125120GEB10RS EL14 SSREL6
	C	UTILITY VAPOR TIGHT FIXTURE UL LISTED FOR WET LOCATION DIE CAST ALUMINUM HOUSING WITH HEAVY DUTY GLASS GLOBE.	120V	1	150W	CEILING	LITHONIA LIGHTING #VC1501M12
	FE	2'x 2' SURFACE MOUNTED FLUORESCENT WITH CONTOURED HOUSING EFFICIENTLY DIRECTS LIGHT DOWN. A BATTERY BACKUP BALLAST FOR EMERGENCY EGRESS LIGHTING.	120V	1	1-F032/841/XPS/ECO	CEILING	LITHONIA #2M-2-17-A12125-MVOLT-EL6
	I	2' MIRROR LIGHT LUMINAIRE. USE PREMIUM ENHANCED ALUMINUM REFLECTOR WITH PROGRAM START BALLAST	120V	1	1-F032/841/XPS/ECO	WALL	LITHONIA #W-1-32-MVOLT-GEB10RS
EGRESS	BATT	12V INDUSTRIAL EMERGENCY NI-CAD BATTERY UNIT.	120V		12V 50W	WALL	HOLOPHANE #C4NT50WWNY0 HPMLSHELFW
	EM	12V INDUSTRIAL EMERGENCY LIGHTING, NI-CAD BATTERY UNIT.	120V	2	12V 50W	WALL	HOLOPHANE #C4NT50WWNY2 HPMLSHELFW
	EMR	WEATHERPROOF EMERGENCY HEAD WITH BOX COVER/ EXTERIOR EGRESS LIGHT REMOTE HEAD NEMA RATED WITH WEATHER PROOF MOUNTING PLATE.	120V	1	12W	WALL	HOLOPHANE HEAD: #LRNQ OBCRMP1WP
	X	SINGLE FACE CAST EXIT SIGN WITH LED ILLUMINATION SYSTEM AND ENCLOSED EMERGENCY NI-CAD BATTERY PACK.	120V		LED-4.6W	WALL	HOLOPHANE #MECE2LNCWSRDC
EXTR	D	LED FULL CUTOFF WALL-PACK LUMINAIRE WITH DIE-CAST ALUMINUM HOUSING PAINTED WITH POLYESTER POWDER COAT FINISH. THE OPTICAL ASSEMBLY SHALL BE GLASS REFRACTOR.	120V	1	LED-12W	WALL	HUBBELL #LCC-12LU-5K-2-LP

LIGHTING FIXTURE SCHEDULE

NOT TO SCALE

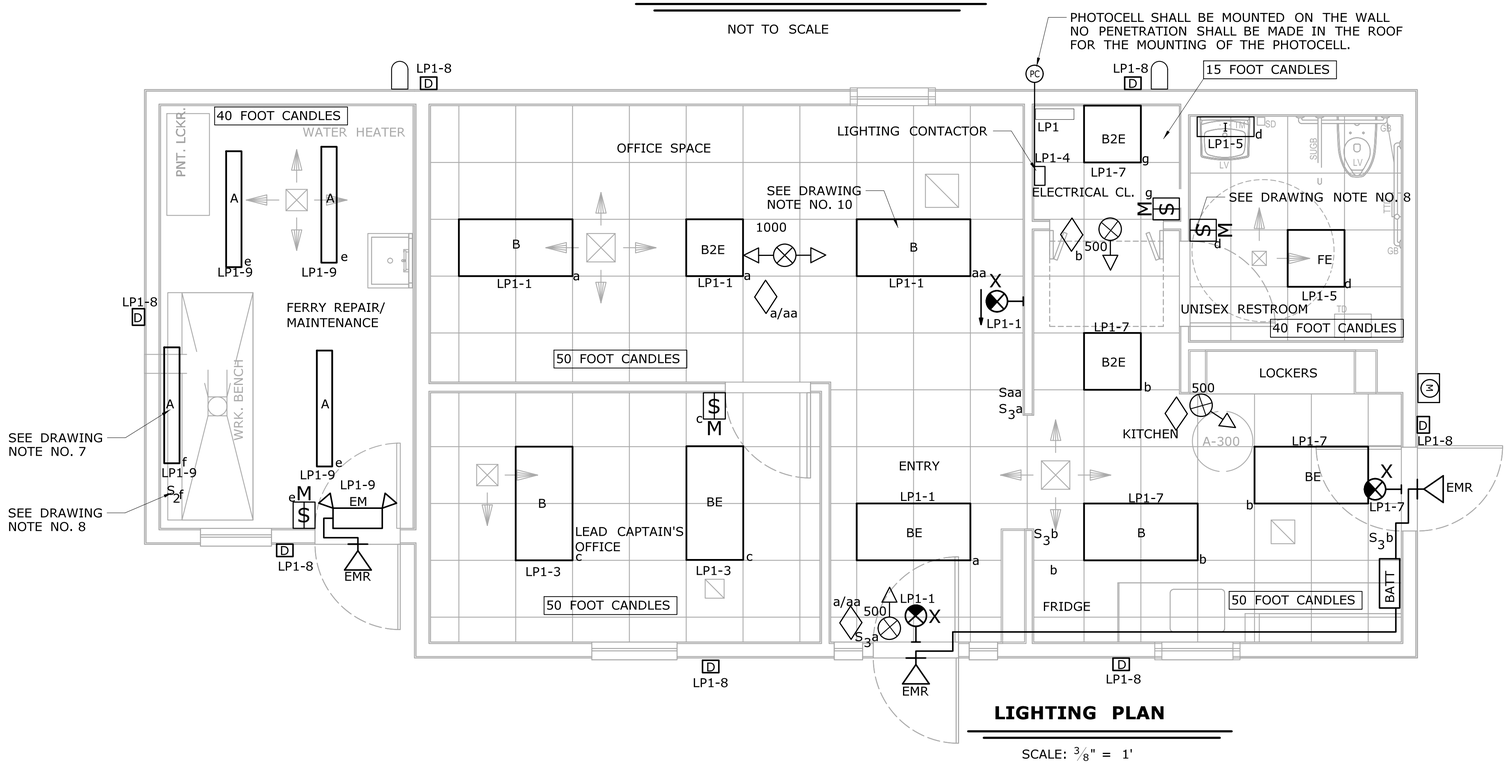

LIGHTING PLAN

SCALE: 3/8" = 1'

LIGHTING SCHEDULE NOTES:

1. ELECTRONIC BALLAST SHALL BE PER UTILITY LIST FOR POSSIBLE REBATE. ALL FLUORESCENT T8 LAMPS AND BALLASTS SHALL BE HIGH PERFORMANCE AND SHALL BE FROM THE SAME MANUFACTURER.
2. LIGHT FIXTURE'S CATALOG NUMBERS MAY HAVE CHANGED SINCE DESIGN - CONSULT MANUFACTURERS FOR CURRENT CATALOG NUMBERS.
3. LAMPS SPECIFIED ARE IN ACCORDANCE WITH ANSI CODE. CATALOG NUMBERS MAY HAVE CHANGED SINCE DESIGN - CONSULT MANUFACTURERS FOR CURRENT CATALOG NUMBERS.
4. DESIGN IS BASED ON CATALOG NUMBERS LISTED. IF SUBMITTED FIXTURES ARE DIFFERENT THE CONTRACTOR SHALL SUBMIT A PHOTOMETRIC LIGHTING ANALYSIS AND POWER DENSITY ANALYSIS REPORT COMPLETE WITH FOOT CANDLE LEVELS AND LIGHT POWER DENSITIES FOR APPROVAL BY THE DESIGNER.

OCCUPANCY SENSOR NOTES:

1. ALL SENSOR LOCATIONS ARE APPROXIMATE. REFER TO MANUFACTURER'S INSTALLATION INSTRUCTIONS PRIOR TO INSTALLATION.
2. ULTRASONIC AND MULTI-TECHNOLOGY CEILING MOUNT SENSORS SHALL BE LOCATED A MINIMUM OF SIX (6) FEET FROM HVAC SUPPLY/RETURN VENTS.
3. CONTRACTOR IS RESPONSIBLE FOR PROPER SENSITIVITY AND TIME DELAY SETTINGS FOR NON-ADAPTIVE PRODUCTS, FOLLOWING THE MANUFACTURER'S RECOMMENDED PLACEMENT, AND FIELD VERIFICATION OF CIRCUITS WITH RESPECT TO POWER PACK PLACEMENT.
4. CONTRACTOR IS RESPONSIBLE FOR FIELD VERIFICATION OF REQUIRED NUMBER OF POWER PACKS:
   - A. ONE POWER PACK IS REQUIRED FOR EACH CONTROLLED CIRCUIT.
   - B. EACH POWER PACK SUPPLY CAPACITY IS 150mA. REFER TO MANUFACTURER'S INSTALLATION GUIDE FOR MAXIMUM NUMBER OF SENSORS CONNECTED TO POWER PACK.
   - C. IF MULTIPLE CIRCUITS ARE TO BE CONTROLLED BY A SINGLE SENSOR, AUXILIARY RELAYS SHALL BE USED IN CONJUNCTION WITH A POWER PACK.
5. SENSORS MOUNTED OVER DOORWAYS SHALL BE PLACED ONE (1) FOOT INSIDE THRESHOLD.
6. EXTERIOR WALLPACKS LOCATED IN THE BACK OF THE BUILDING SHALL BE CONTROLLED BY BOTH THE PHOTOCELL AND OCCUPANCY SENSORS. OCCUPANCY SENSOR SHALL BE INSTALLED AHEAD OF THE PHOTOCELL SUCH THAT AFTER DUST THE REAR LIGHTS SHALL NOT BE ON UNLESS MOTION IS DETECTED.

DRAWING NOTES:

1. ALL CONCEALED CONDUIT IN OFFICE CORE SHALL BE EMT, EXCEPT FULLY RATED MC (METAL CLAD) CABLE SHALL BE USED TO CONNECT FLUORESCENT FIXTURES FROM JUNCTION BOXES ABOVE SUSPENDED CEILING. SEE DETAIL NO. 2 ON DRAWING NO. E-006.
2. MOUNT EGRESS REMOTE LAMP HEADS TYPE EMR OUTSIDE AS SHOWN ON THIS DRAWING. CONNECT FEED IN CONDUIT TO EM BATTERY PACK LOCATED INSIDE AS SHOWN ON THIS DRAWING.
3. REFER TO DRAWING NO. E-002 FOR LIGHTING FIXTURE, OCCUPANCY SENSORS, AND SWITCH CONTROL SYMBOLS. REFER TO DETAIL NO. 1 ON DRAWING NO. E-009 FOR MOUNTING DETAIL.
4. INSTALL FLUORESCENT FIXTURES TYPE "BE", "B2E" AND "FE" WITH EMERGENCY BALLAST IN LOCATIONS SHOWN ON THIS PAGE. PROVIDE MARKING ON EXTERIOR OF FIXTURE TO MAKE READILY APPARENT FROM GROUND LEVEL (PROVIDE A RED DOT OR DISTINCT MARKING APPROVED BY ENGINEER).
5. CENTER TYPE "I" FIXTURES OVER SINK. COORDINATE WITH PLUMBING.
6. COORDINATE FINAL LOCATION OF TYPE "A" FIXTURES WITH ENGINEER AS TO AVOID CONFLICT WITH MECHANICAL EQUIPMENT.
7. MOUNT LIGHT FIXTURE UNDER EXHAUST HOOD. COORDINATE INSTALLATION WITH THE MECHANICAL INSTALLER TO AVOID ALL CONFLICTS WITH MECHANICAL DEVICES. SEE EXHAUST HOOD DETAIL ON DRAWING NO. M-005.
8. PROVIDE WALL MOUNTED OCCUPANCY SENSOR SWITCH TO CONTROL BOTH THE LIGHT FIXTURE AND THE EXHAUST FAN.
9. PROVIDE A TWO POLE SWITCH TO CONTROL BOTH THE LIGHT FIXTURE AND THE EXHAUST FAN. SEE DRAWING NO. M-003 FOR EXHAUST FAN LOCATION.
10. THIS FIXTURES SHALL BE ON THEIR OWN SWITCH FOR THE PURPOSE OF DAYLIGHT HARVESTING. FIXTURE SHALL REMAIN OCCUPANCY CONTROLLED. SEE SWITCHES OCCUPANCY SENSORS, ETC.

REV.	DATE	REVISION DESCRIPTION	SHEET NO.
-	-	-	-
-	-	-	-
-	-	-	-
-	-	-	-
-	-	-	-
-	-	-	-

THE INFORMATION, INCLUDING ESTIMATED QUANTITIES OF WORK, SHOWN ON THESE SHEETS IS BASED ON LIMITED INVESTIGATIONS BY THE STATE AND IS IN NO WAY WARRANTED TO INDICATE THE CONDITIONS OF ACTUAL QUANTITIES OF WORK WHICH WILL BE REQUIRED.

Plotted Date: 5/3/2013

DESIGNER/DRAFTER: SKW
CHECKED BY: JMK
SCALE AS NOTED

STATE OF CONNECTICUT
DEPARTMENT OF TRANSPORTATION

Filename: ...\FD_MST_ELE_0118_0163_E004.dgn

SIGNATURE/BLOCK: OFFICE OF ENGINEERING
APPROVED BY: DATE:

PROJECT TITLE: ROCKY HILL-GLASTONBURY FERRY OFFICE BUILDING

TOWN: ROCKY HILL

DRAWING TITLE: LIGHTING PLAN

PROJECT NO. 118-163
DRAWING NO. E-004
SHEET NO. 09.04

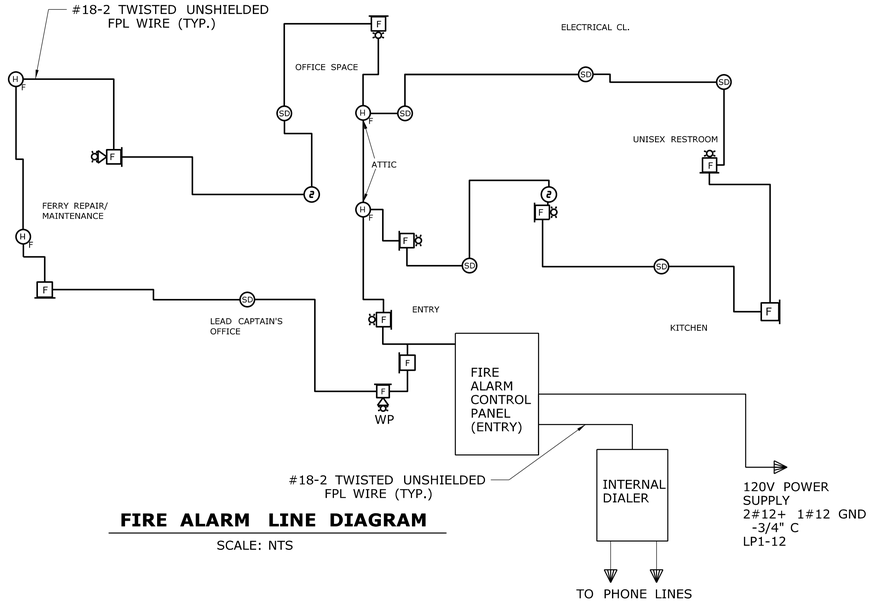

FIRE ALARM LINE DIAGRAM

SCALE: NTS

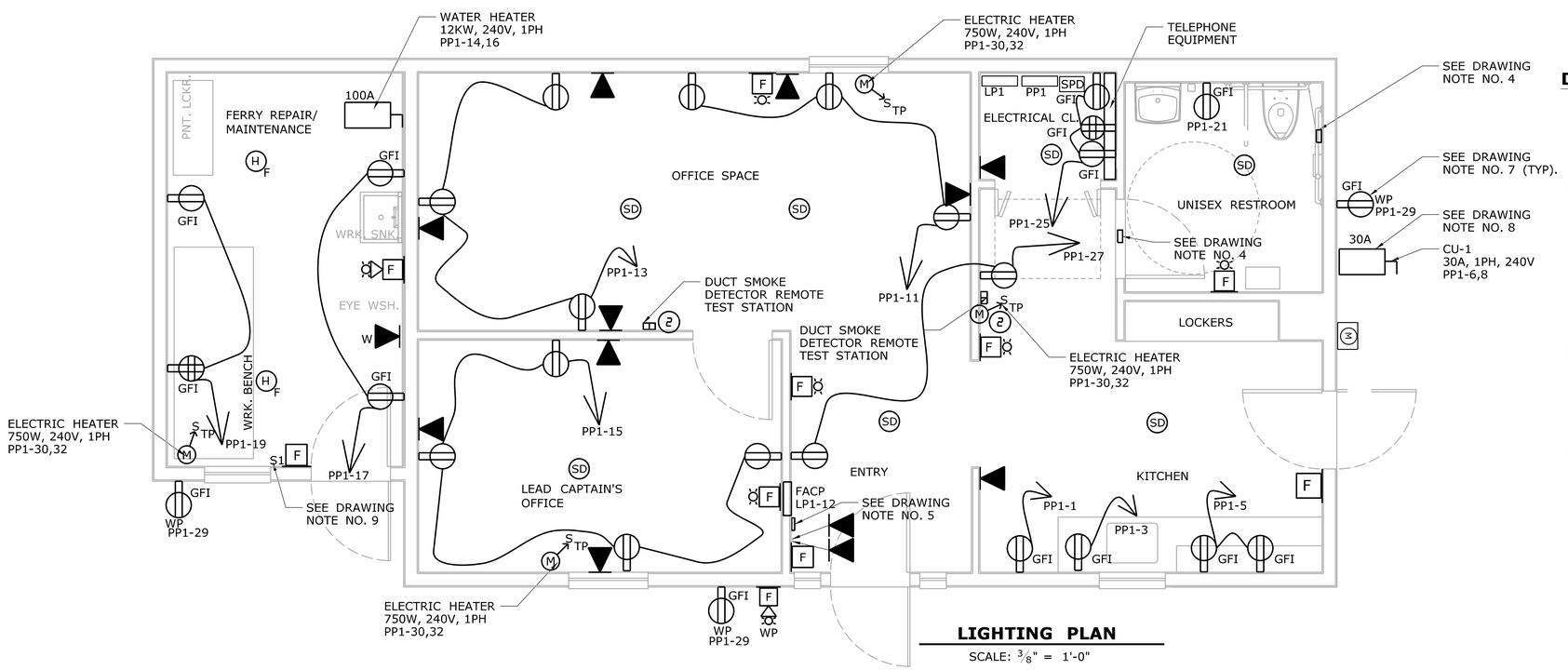

LIGHTING PLAN

SCALE: 3/8" = 1'-0"

FIRE ALARM NOTES:

1. BASIS OF DESIGN: THE FOLLOWING NOTIFIER SYSTEM COMPONENTS ARE INTENDED TO BE UTILIZED BY INSTALLER AS A GUIDE:

NOTIFIER CATALOG NUMBER	DESCRIPTION
NBG-12LX	ADDRESSABLE PULL STATION
NH100H	INTELLIGENT THERMAL DETECTOR
NP100	ADDRESSABLE PHOTO-ELECTRIC SMOKE DETECTOR
DNR	ADDRESSABLE DUCT SMOKE DETECTOR
NFW2-100R	ADDRESSABLE FIRE ALARM CONTROL PANEL
411 UD	DIGITAL DIALER
P2RK	ADDRESSABLE AUDIBLE/VISIBLE WITH HORN WEATHERPROOF
P2R	ADDRESSABLE AUDIBLE/VISIBLE WITH HORN
SR	ADDRESSABLE FIRE ALARM STROBE INDICATOR
RTS-151 KEY	DUCT SMOKE DETECTOR REMOTE TEST STATION

2. FIRE ALARM WIRING SHALL BE STYLE 4 CLASS "A" ADDRESSABLE THE RISER DIAGRAM MAY BE USED AS A GUIDE. ACTUAL WIRING SHALL CONFORM WITH MANUFACTURERS SPECIFICATIONS.

INSTALLATION NOTES:

1. FIRE ALARM SYSTEM SHALL BE FM GLOBAL APPROVED AND SHALL BE INSTALLED IN ACCORDANCE TO FM GLOBAL DATA SHEET 5-40.
2. FIRE ALARM SYSTEM APPURTENANCES SHALL COMPLY WITH ADA REQUIREMENTS.
3. WIRING IS DIAGRAMMATIC ONLY. CONSULT WITH FIRE ALARM MANUFACTURER FOR ACTUAL WIRING.
4. THE FIRE ALARM CONTROL PANEL CIRCUIT BREAKER SHALL PAINTED RED AND MARKED "FIRE ALARM"

DRAWING NOTES:

1. ALL WIRING IN OFFICE SHALL BE FED IN EMT CONDUIT INSIDE FINISH WALL.
2. REFER TO DETAIL NO. 1 ON DRAWING NO. E-009 FOR ALL MOUNTING HEIGHT INFORMATION.
3. CONTRACTOR SHALL RUN ALL PHONE AND DATA CABLE AS REQUIRED ON PLANS OR AS DIRECTED BY ENGINEER. CONTRACTOR SHALL MAKE ALL FINAL CONNECTIONS UNDER CONNDOT SUPERVISION.
4. INSTALL CALL TO AID SYSTEM IN THE BATHROOM. INSTALL PULL CORD SWITCH IN BATHROOM AS SHOWN AND THE LIGHT STROBE/HORN ABOVE THE BATHROOM DOOR ON THE HALL SIDE. REFER TO DETAIL NO. 1 ON DRAWING NO. E-009 FOR MOUNTING HEIGHT INFORMATION.
5. INSTALL A LAMINATED FIRE ALARM FLOOR PLAN IN THE ENTRY. REFER TO DETAIL NO. 1 ON DRAWING NO. E-009 FOR MOUNTING HEIGHT INFORMATION.
6. DUCT MOUNTED SMOKE DETECTORS TO BE INSTALLED BY MECHANICAL INSTALLER, AND FURNISHED, WIRED, AND CONNECTED BY THE ELECTRICAL INSTALLER. REFER TO MECHANICAL DRAWING M-003 FOR ADDITIONAL INSTALLATION AND EXACT LOCATION INFORMATION.
7. ALL EXTERIOR MOUNTED RECEPTACLES SHALL BE EQUIPPED WITH AN IN-USE, WEATHERPROOF COVER.
8. DISCONNECT ENCLOSURE SHALL BE NEMA 3R.
9. INSTALL EMERGENCY SHUT OFF SWITCH FOR THE WATER HEATER. POWER OFF SWITCH S1. REFER TO DETAIL NO. 1 ON DRAWING NO. E-009 FOR MOUNTING HEIGHT INFORMATION.
10. FIRE RETARDANT PLYWOOD SHALL BE INSTALLED IN ALL WALLS IN THE ELECTRICAL CLOSET FROM 2 FT TO 8 FT AFF.
11. THE CONTRACTOR SHALL FURNISH AND INSTALL #6 AWG. GND. CONDUCTOR IN 3/4" RGSC CONDUIT FROM PP1 GROUND BAR TO COMMUNICATION BACKBOARD.
12. INSTALL TWO (2) RJ31X TELEPHONE RECEPTACLES IN THE PROXIMITY OF THE DIALER FOR FIRE ALARM DEDICATED PHONE LINES.

REV.	DATE	REVISION DESCRIPTION	SHEET NO.
-	-	-	-
-	-	-	-
-	-	-	-
-	-	-	-
-	-	-	-
-	-	-	-

THE INFORMATION, INCLUDING ESTIMATED QUANTITIES OF WORK, SHOWN ON THESE SHEETS IS BASED ON LIMITED INVESTIGATIONS BY THE STATE AND IS IN NO WAY WARRANTED TO INDICATE THE CONDITIONS OF ACTUAL QUANTITIES OF WORK WHICH WILL BE REQUIRED.

Plotted Date: 1/17/2013

DESIGNER/DRAFTER: SKW
CHECKED BY: JMK
SCALE AS NOTED

STATE OF CONNECTICUT
DEPARTMENT OF TRANSPORTATION

Filename: ...\FD_MST_ELE_0118_0163_E005.dgn

SIGNATURE/BLOCK: OFFICE OF ENGINEERING
APPROVED BY: DATE:

PROJECT TITLE: ROCKY HILL-GLASTONBURY FERRY OFFICE BUILDING

TOWN: ROCKY HILL

DRAWING TITLE: POWER AND FIRE ALARM PLAN

PROJECT NO. 118-163
DRAWING NO. E-005
SHEET NO. 09.05

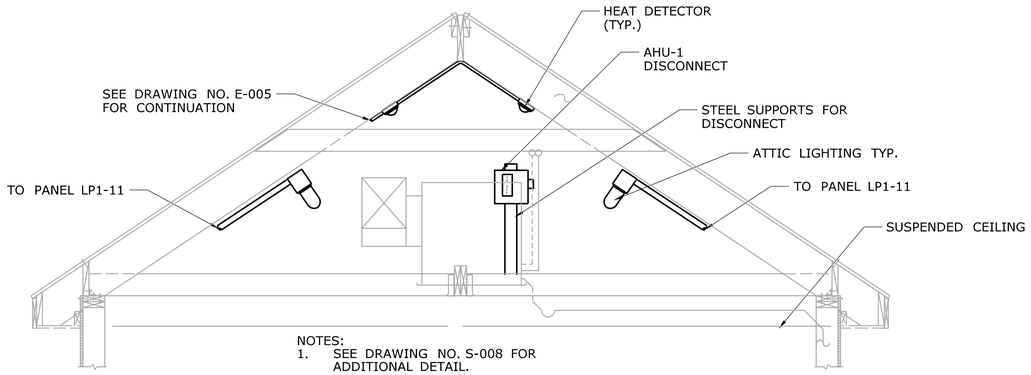

NOTES:
1. SEE DRAWING NO. S-008 FOR ADDITIONAL DETAIL.
2. SEE DRAWING NO. M-005 FOR THE ATTIC MOUNTED DUCT WORK DETAIL.

DETAIL 1 - ATTIC MOUNTING

SCALE: 1/2" = 1'-0"

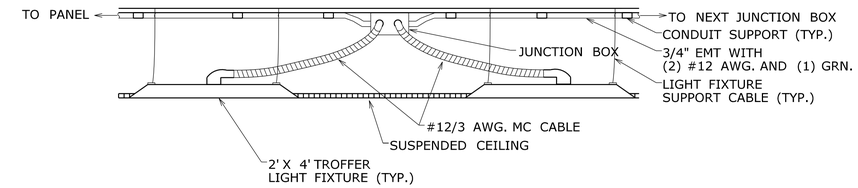

DETAIL 2 - RECESSED TROFFER LIGHTING IN OFFICE DETAIL

NOT TO SCALE

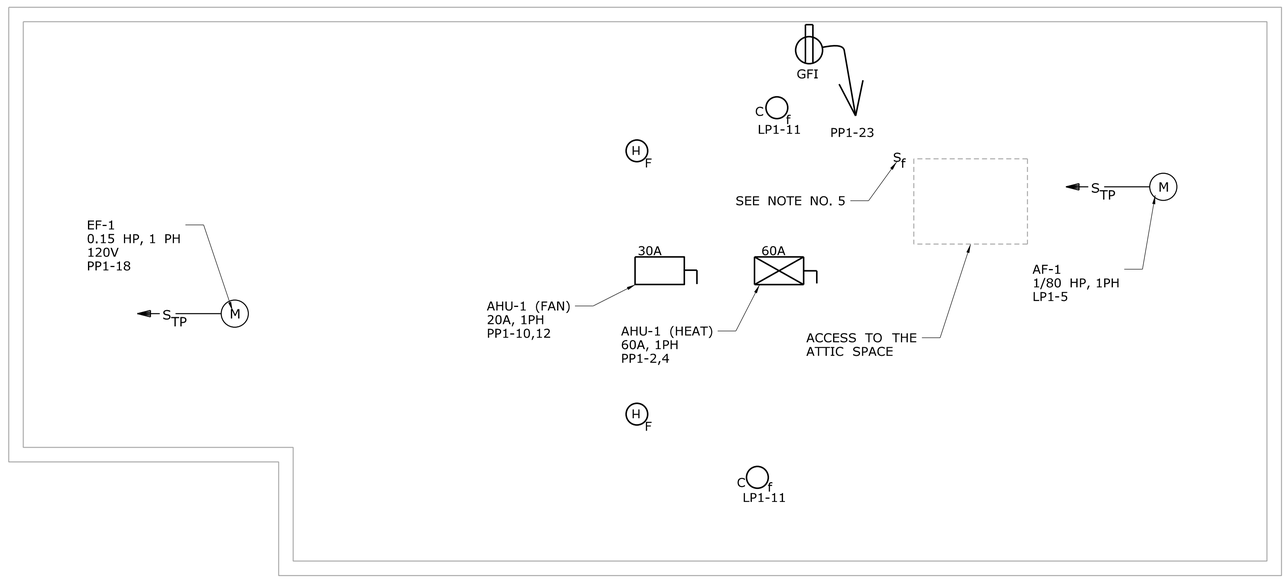

POWER & LIGHTING PLAN

SCALE: 3/8" = 1'-0"

DRAWING NOTES:

1. SEE DRAWING NO. E-005 FOR FIRE ALARM RISER DIAGRAM.
2. INSTALL INTELLIGENT ADDRESSABLE THERMAL DETECTORS IN THE ATTIC SPACE. ATTIC SPACE HEAT DETECTORS SHALL BE RATED FOR 190 DEGREES.
3. CONDUITS INSTALLED IN THE ATTIC SPACE SHALL BE EMT. FMC SHALL ONLY BE USED FOR SHORT RUNS (6 FEET MAXIMUM) FOR MOTORIZED EQUIPMENT.
4. PROVIDE STEEL SUPPORTS FOR DISCONNECTS AND STARTERS.
5. PROVIDE STEEL SUPPORTS FOR LIGHT SWITCH. LIGHT SWITCH SHALL BE EQUIPPED WITH PILOT LIGHT.

REV.	DATE	REVISION DESCRIPTION	SHEET NO.
-	-	-	-
-	-	-	-
-	-	-	-
-	-	-	-
-	-	-	-
-	-	-	-

THE INFORMATION, INCLUDING ESTIMATED QUANTITIES OF WORK, SHOWN ON THESE SHEETS IS BASED ON LIMITED INVESTIGATIONS BY THE STATE AND IS IN NO WAY WARRANTED TO INDICATE THE CONDITIONS OF ACTUAL QUANTITIES OF WORK WHICH WILL BE REQUIRED.

Plotted Date: 1/17/2013

DESIGNER/DRAFTER: SKW
CHECKED BY: JMK
SCALE AS NOTED

STATE OF CONNECTICUT
DEPARTMENT OF TRANSPORTATION

Filename: ...\FD_MST_ELE_0118_0163_E006.dgn

SIGNATURE/BLOCK:
OFFICE OF ENGINEERING
APPROVED BY: DATE:

PROJECT TITLE:
ROCKY HILL-GLASTONBURY FERRY OFFICE BUILDING

TOWN: ROCKY HILL

DRAWING TITLE:
ATTIC POWER AND LIGHTING PLAN

PROJECT NO. 118-163
DRAWING NO. E-006
SHEET NO. 09.06

OFFICE FACILITY LIGHTING PANEL "LP1"

CKT. NO.	DIRECTORY	LOAD (VA) LA		LB	TRIP (A)		TRIP (A)	LOAD (VA) LA		LB	DIRECTORY	CKT. NO.
1	OFFICE LIGHTING	255			20		20				SPARE	2
3	CAPTAIN OFFICE LGHTING			116	20		20			200	LIGHTING CONTACTOR	4
5	RESTROOM LIGHTING	740			20		20				SPARE	6
7	KITCHEN/ELE CLOSET			200	20		20			88	WALLPACK LIGHTING	8
9	MAINTENANCE LIGHTING	256			20		20				SPARE	10
11	ATTIC LIGHTING			300	20		20			360	FACP	12
13	SPARE				25		20				SPARE	14
15												16
17	SPARE				20		20				SPARE	18

A B

A		B	
1.25		1.26	KVA
10.4		10.5	AMPS
2.515			TOTAL LOAD IN KVA

SERVICE CHARACTERISTICS

18-CIRCUIT PANEL
120 / 240 V, 1 PH., 3 WIRE, SOLID NEUTRAL
60 CYCLE, WITH GROUND BUS
100 AMP MAIN BUS
100 AMP MAIN LUGS ONLY
22 KAIC MIN.
SURFACE MOUNTING

ENCLOSURE : NEMA 1
LOCATION: ELEC. CLOSET
FED FROM PP1

BRANCH CIRCUIT BREAKERS SHALL BE RATED FOR 22 KAIC

LIGHTING PANEL SCHEDULE DETAIL

NOT TO SCALE

NOTE:

1. CIRCUIT BREAKER SIZES FOR HVAC EQUIPMENT SHALL BE COORDINATED WITH THE ELECTRICAL REQUIREMENTS OF THE ACTUAL HVAC EQUIPMENT SUBMITTED. THE CONTRACTOR SHALL COORDINATE ANY BREAKER REQUIREMENTS WITH ACTUAL EQUIPMENT INSTALLED.

OFFICE FACILITY POWER PANEL "PP1"

MAIN BREAKER 200 AMPS

CKT. NO.	DIRECTORY	LOAD (VA) LA		LB	TRIP (A)	TRIP (A)	LOAD (VA) LA		LB	DIRECTORY	CKT. NO.	
1	FRIDGE REC	180			20	60	4800			AHU-1 (HEAT)	2	
3	KITCHEN REC			180	20				4800		4	
5	KITCHEN REC	360			20	30	2880			CU-1	6	
7	SPARE				20				2880		8	
9	SPARE				30	20	1020			AHU-1 (FAN)	10	
11	OFFICE REC			540	20				1020		12	
13	OFFICE REC	540			20	70	6000			WATER HEATER	14	
15	LEAD OFFICE REC			720	20				6000		16	
17	MAINTENANCE REC	360			20	20	680			EF-1	18	
19	MAINTENANCE REC			540	20	20				SPARE	20	
21	RESTROOM REC	180			20	60	1251			LP1	22	
23	ATTIC REC			180	20				1264		24	
25	ELECTRICAL CLOSET REC	720			20	20				SPARE	26	
27	HALL REC			360	20	20			550	HEAT TRACE	28	*
29	EXTERIOR REC	540			20	20	1500			UNIT HEATERS	30	
31	SPARE				20				1500		32	
33	SPARE				20	20				SPARE	34	
35	SPARE				20	20				SPARE	36	
37	SPARE				20	20				SPARE	38	
39	SPARE				20	20				SPARE	40	
41	SPARE					20				SPARE	42	

A B

A		B	
21.01		20.53	KVA
175.1		171.1	AMPS
41.545			TOTAL LOAD IN KVA

SERVICE CHARACTERISTICS

42-CIRCUIT PANEL
120 / 240 V, 1 PH., 3 WIRE, SOLID NEUTRAL
60 CYCLE, WITH GROUND BUS
200 AMP MAIN BUS
200 AMP MAIN CIRCUIT BREAKER
22 KAIC MIN.
SURFACE MOUNTING

* PROVIDE GFI CIRCUIT BREAKER

ENCLOSURE : NEMA 1
LOCATION: ELEC. CLOSET

BRANCH CIRCUIT BREAKERS SHALL BE RATED FOR 22 KAIC

POWER PANEL SCHEDULE DETAIL

NOT TO SCALE

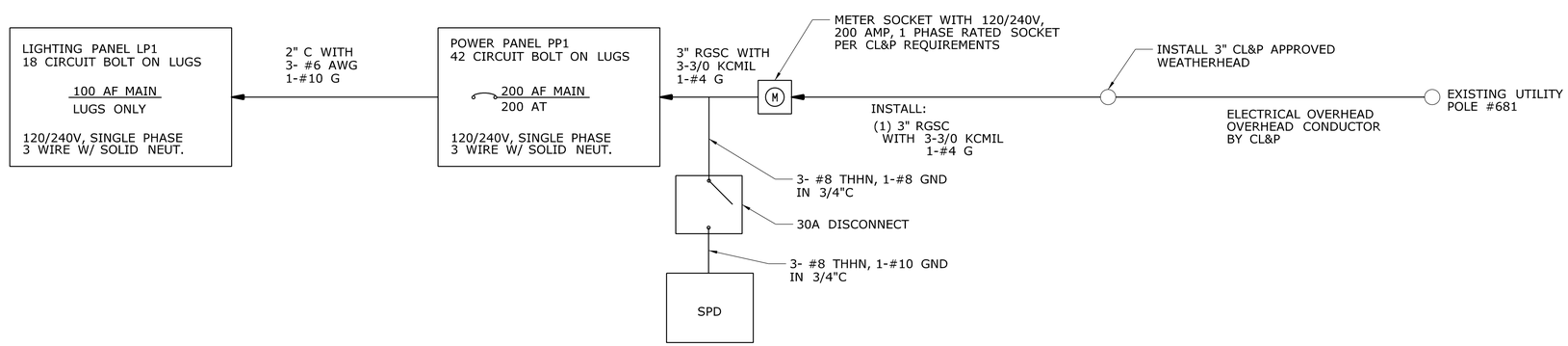

ONE LINE DIAGRAM

NOT TO SCALE

REV.	DATE	REVISION DESCRIPTION	SHEET NO.
-	-	-	-
-	-	-	-
-	-	-	-
-	-	-	-
-	-	-	-
-	-	-	-

THE INFORMATION, INCLUDING ESTIMATED QUANTITIES OF WORK, SHOWN ON THESE SHEETS IS BASED ON LIMITED INVESTIGATIONS BY THE STATE AND IS IN NO WAY WARRANTED TO INDICATE THE CONDITIONS OF ACTUAL QUANTITIES OF WORK WHICH WILL BE REQUIRED.

Plotted Date: 1/17/2013

DESIGNER/DRAFTER: SKW
CHECKED BY: JMK
SCALE AS NOTED

STATE OF CONNECTICUT
DEPARTMENT OF TRANSPORTATION

Filename: ...\FD_MST_ELE_0118_0163_E007.dgn

SIGNATURE/ BLOCK:
OFFICE OF ENGINEERING
APPROVED BY: DATE:

PROJECT TITLE:
ROCKY HILL-GLASTONBURY
FERRY OFFICE BUILDING

TOWN: ROCKY HILL

DRAWING TITLE:
PANEL SCHEDULE
ONE-LINE DIAGRAM

PROJECT NO. 118-0163
DRAWING NO. E-007
SHEET NO. 09.07

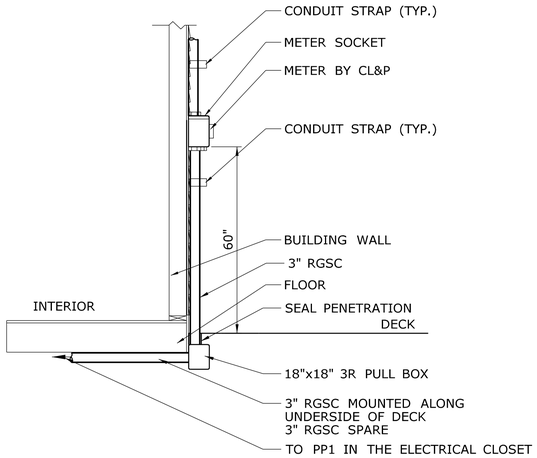

DETAIL 1- SERVICE CONDUIT STUB-UP DETAIL

NOT TO SCALE

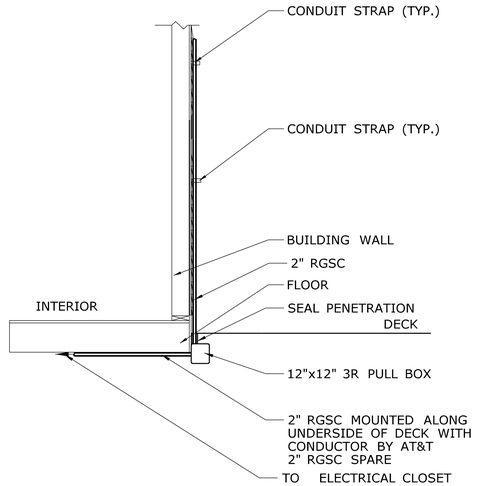

DETAIL 4- COMMUNICATION SERVICE CONDUIT STUB-UP DETAIL

NOT TO SCALE

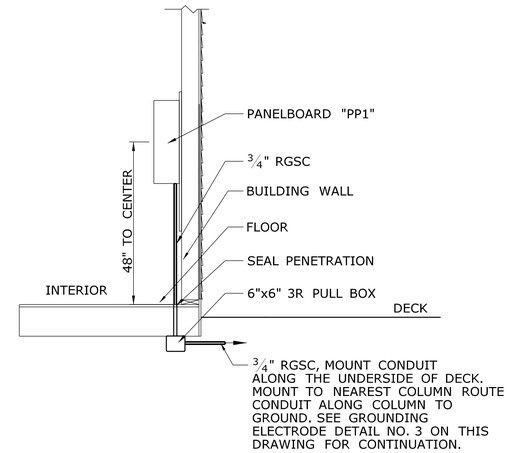

DETAIL 7- GROUNDING CONDUIT STUB-UP DETAIL

NOT TO SCALE

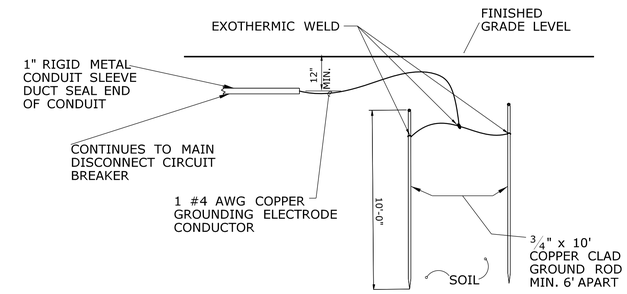

DETAIL 3 - GROUNDING ELECTRODE DETAIL

NOT TO SCALE

NOTE: CONDUIT SYSTEMS SHALL BE SUPPORTED IN ACCORDANCE TO NEC 344.30. THE CONDUIT SHALL BE SECURELY FASTENED WITHIN 3' OF THE SERVICE HEAD.

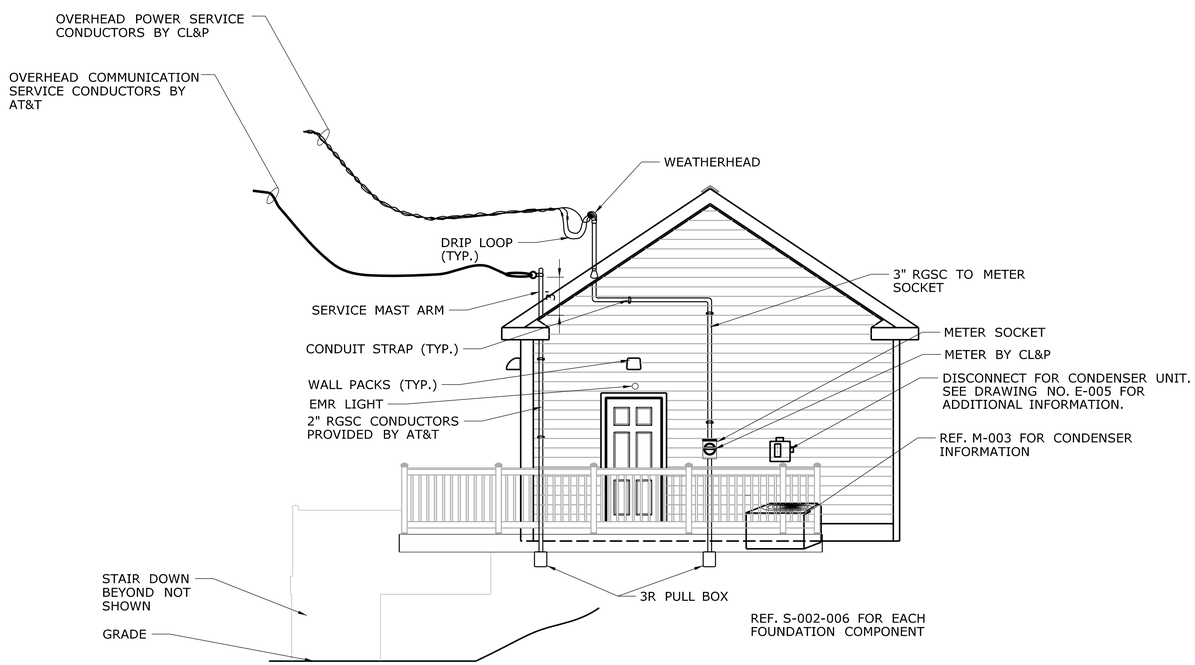

DETAIL 2 - SERVICE CONDUIT MOUNTING DETAIL

NOT TO SCALE

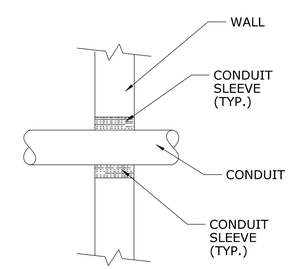

DETAIL 5 - WALL PENETRATION

NOT TO SCALE

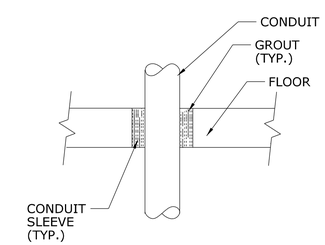

DETAIL 6 - FLOOR PENETRATION

NOT TO SCALE

REV.	DATE	REVISION DESCRIPTION	SHEET NO.
-	-	-	-
-	-	-	-
-	-	-	-
-	-	-	-
-	-	-	-
-	-	-	-

THE INFORMATION, INCLUDING ESTIMATED QUANTITIES OF WORK, SHOWN ON THESE SHEETS IS BASED ON LIMITED INVESTIGATIONS BY THE STATE AND IS IN NO WAY WARRANTED TO INDICATE THE CONDITIONS OF ACTUAL QUANTITIES OF WORK WHICH WILL BE REQUIRED.

Plotted Date: 1/17/2013

DESIGNER/DRAFTER: SKW

CHECKED BY: JMK

SCALE AS NOTED

STATE OF CONNECTICUT
DEPARTMENT OF TRANSPORTATION

Filename: ...\FD_MST_ELE_0118_0163_E008.dgn

SIGNATURE/BLOCK: OFFICE OF ENGINEERING

APPROVED BY: DATE:

PROJECT TITLE: ROCKY HILL-GLASTONBURY FERRY OFFICE BUILDING

TOWN: ROCKY HILL

DRAWING TITLE: ELECTRICAL DETAILS 1

PROJECT NO. 118-0163

DRAWING NO. E-008

SHEET NO. 09.08

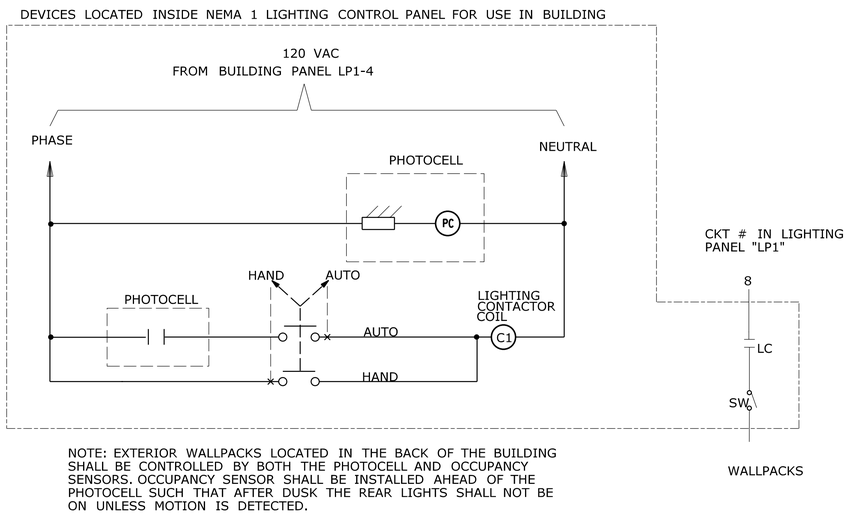

NOTE: EXTERIOR WALLPACKS LOCATED IN THE BACK OF THE BUILDING SHALL BE CONTROLLED BY BOTH THE PHOTOCELL AND OCCUPANCY SENSORS. OCCUPANCY SENSOR SHALL BE INSTALLED AHEAD OF THE PHOTOCELL SUCH THAT AFTER DUSK THE REAR LIGHTS SHALL NOT BE ON UNLESS MOTION IS DETECTED.

DETAIL 2 - LIGHTING CONTACTOR WIRING DIAGRAM

NOT TO SCALE

MOUNTING HEIGHT NOTES:

1. MEANS OF MOUNTING SHALL BE PER MANUFACTURER'S SPECIFICATIONS UNLESS OTHERWISE NOTED.
2. MOUNT GFI RECEPTACLES ADJACENT TO HANDICAP SINKS AT ADA ACCESSIBLE HEIGHT 40" AFF.
3. COUNTER TOP GFI RECEPTACLES SHALL BE INSTALLED 20" ABOVE COUNTER TOP MEASURED TO THE TOP OF THE RECEPTACLE.
4. TYPE EM LIGHT FIXTURES SHALL BE MOUNTED AT 6" ABOVE THE DOOR IN THE MAINTENANCE AREAS.
5. WHERE FINNED TUBE RADIATION EXISTS, INSTALL BOTTOM OF WORK BOXES 2" ABOVE FINNED TUBE RADIATION.
6. ALL CONDUIT INSTALLED SURFACE MOUNTED IN THE MAINTENANCE AREA AND ELECTRICAL CLOSET SHALL BE RGSC. CONCEALED CONDUIT SHALL BE EMT. CONDUIT RACEWAYS SPECIFIED TO BE INSTALLED AND EXTENDED BEYOND THE CEILING SHALL BE CONVERTED TO EMT ONCE EXTENDING PAST THE CEILING. COUPLING CONNECTING RGSC TO EMT CONDUIT SHALL BE THREADED TYPE ON THE RGSC SIDE ONLY.
7. CENTER WORKBENCH LIGHTING FIXTURES OVER WORKBENCH LOCATION 7' AFF. TYPE "A" FIXTURE SHALL BE MOUNTED UNDER THE VENT HOOD. INSTALL LIGHT SWITCHES FOR TYPE "A" FIXTURE ON THE WALL ADJACENT TO THE BENCH OR TO THE WORKBENCHES WHEN NOT AGAINST A WALL.
8. MASONRY BOXES INSTALLED IN MASONRY WALLS SHALL BE FLUSH MOUNTED. THE CONTRACTOR CAN ADJUST MOUNTING HEIGHT AND LOCATION OF MASONRY BOXES TO THE NEAREST CMU FOR EASE OF INSTALLATION. MOUNTING HEIGHTS SHALL BE UNIFORMED BETWEEN LIKE DEVICES AND DEVICES WITH THE SAME DESIGNATED MOUNTED HEIGHTS AS DETAILED IN THIS SHEET.

NOTE: NOT ALL DEVICES ARE NECESSARILY USED.

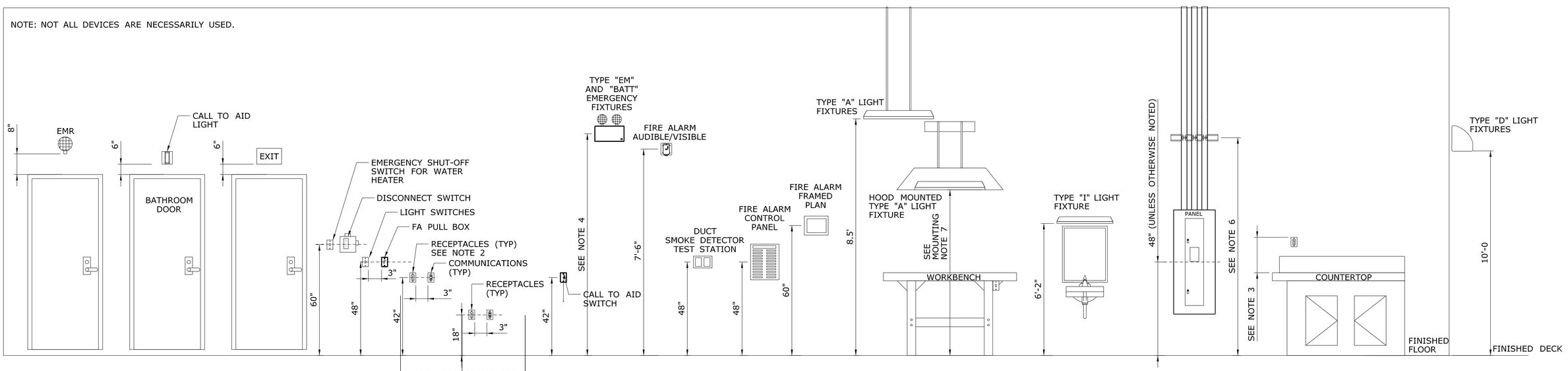

DETAIL 1 - ELECTRICAL APPARATUS MOUNTING HEIGHTS

NOT TO SCALE

REV.	DATE	REVISION DESCRIPTION	SHEET NO.
-	-	-	-
-	-	-	-
-	-	-	-
-	-	-	-
-	-	-	-
-	-	-	-

THE INFORMATION, INCLUDING ESTIMATED QUANTITIES OF WORK, SHOWN ON THESE SHEETS IS BASED ON LIMITED INVESTIGATIONS BY THE STATE AND IS IN NO WAY WARRANTED TO INDICATE THE CONDITIONS OF ACTUAL QUANTITIES OF WORK WHICH WILL BE REQUIRED.

Plotted Date: 1/17/2013

DESIGNER/DRAFTER: SKW
CHECKED BY: JMK
SCALE AS NOTED

STATE OF CONNECTICUT
DEPARTMENT OF TRANSPORTATION

Filename: ...\FD_MST_ELE_0118_0163_E009.dgn

SIGNATURE/BLOCK:
OFFICE OF ENGINEERING
APPROVED BY: DATE:

PROJECT TITLE:
ROCKY HILL-GLASTONBURY FERRY OFFICE BUILDING

TOWN: ROCKY HILL

DRAWING TITLE:
ELECTRICAL DETAILS 2

PROJECT NO. 118-0163
DRAWING NO. E-009
SHEET NO. 09.09

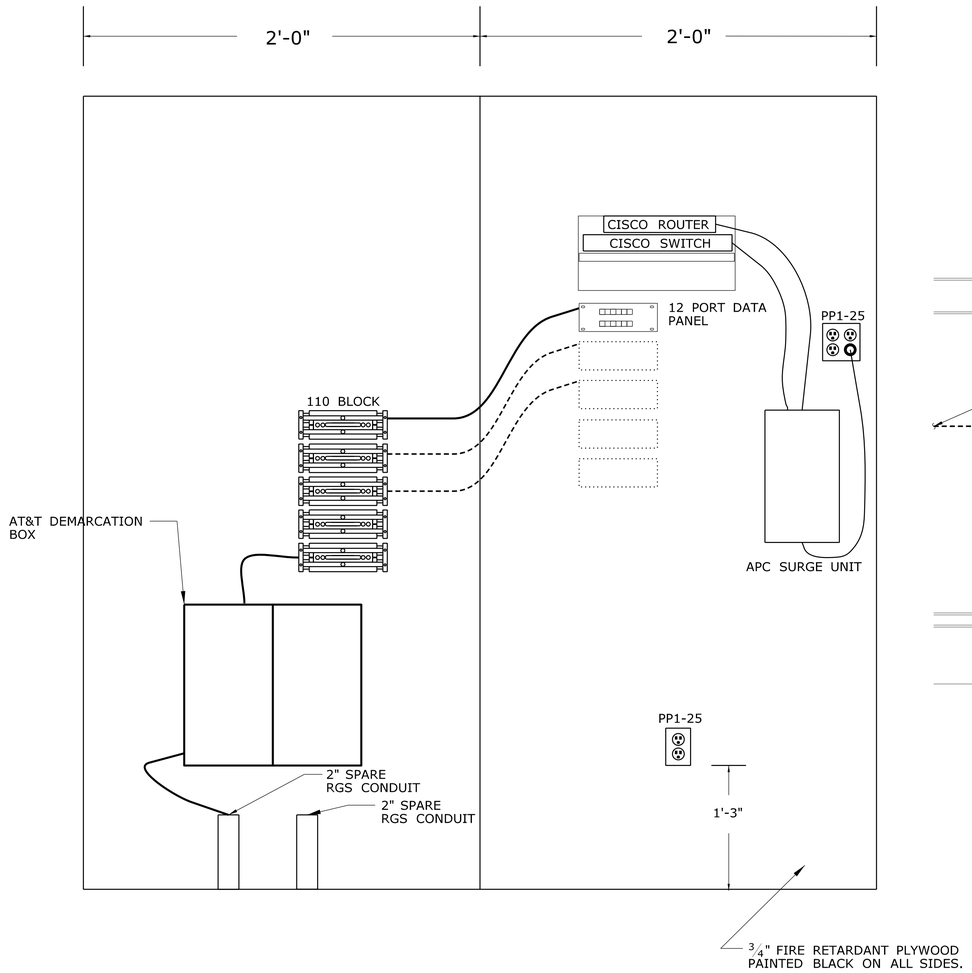

DETAIL 1 - VOICE AND DATA WALL SET-UP

NOT TO SCALE

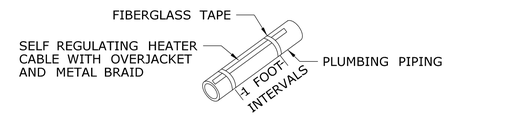

THE CABLE SHOULD FIT SNUGLY AGAINST THE PIPE AND BE SECURED AT ONE (1) FOOT INTERVALS, AS SHOWN (TYP).

WARNING
TO PREVENT POSSIBLE DAMAGE TO THE HEATING CABLE, DO NOT FASTEN WITH METAL STRAPS, WIRE, VINYL ELECTRICAL TAPE OR DUCT TAPE.

DETAIL 2 - HEATER CABLE INSTALLATION

NOT TO SCALE

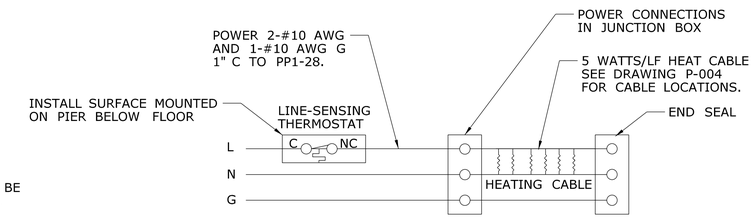

DETAIL 3 - TERMINAL BLOCK CONNECTION

NOT TO SCALE

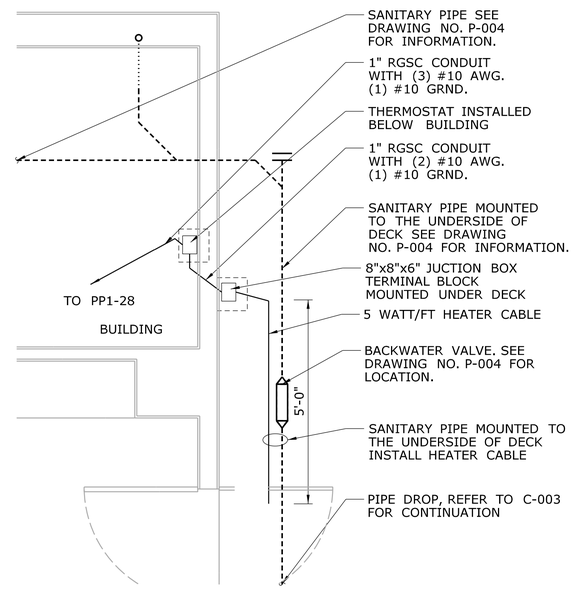

NOTE: INSTALLATION OF CONDUIT SHALL BE PER CSI SPECIFICATION 260533.

DETAIL 4 - SANITARY PIPING HEAT TRACE SYSTEM DETAIL

NOT TO SCALE

HEAT TRACE NOTES:

1. PROVIDE HEAT TRACE FOR ALL SUPPLY PLUMBING PIPING INSTALLED WITHIN FLOOR STRUCTURE, REFER TO P-003 FOR PLUMBING PIPE LOCATIONS. APPROXIMATELY 100 LINEAR FEET OF HEAT TRACE.
2. PROVIDE HEAT TRACE FOR THE WATER SERVICE ENTRANCE PIPE GREATER THAN 48" BELOW FINISHED GRADE UNTIL ABOVE FINISHED FLOOR. SEE DRAWING P-005 FOR ADDITIONAL INFORMATION.
3. PROVIDE HEAT TRACE AND INSULATE PIPE AND VALVE WITHIN BACKWATER VALVE (APPROXIMATELY 5 LINEAR FEET OF HEAT TRACE). SEE DRAWING NO. P-004 FOR LOCATION OF THE VALVE. SEE SANITARY PIPING RISER DETAIL ON DRAWING NO. P-005 FOR ADDITIONAL INFORMATION.

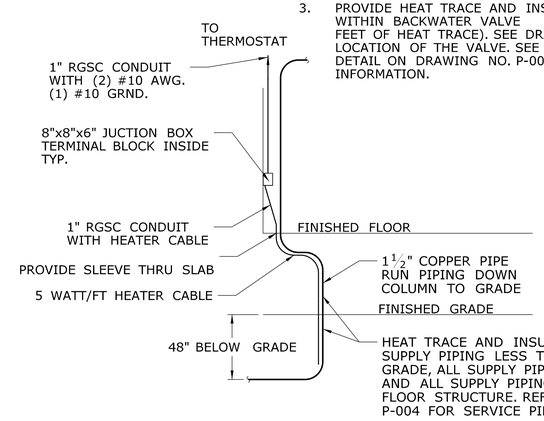

DETAIL 5 - SUPPLY PIPING HEAT TRACE SYSTEM DETAIL

NOT TO SCALE

REV.	DATE	REVISION DESCRIPTION	SHEET NO.
-	-	-	-
-	-	-	-
-	-	-	-
-	-	-	-
-	-	-	-
-	-	-	-

THE INFORMATION, INCLUDING ESTIMATED QUANTITIES OF WORK, SHOWN ON THESE SHEETS IS BASED ON LIMITED INVESTIGATIONS BY THE STATE AND IS IN NO WAY WARRANTED TO INDICATE THE CONDITIONS OF ACTUAL QUANTITIES OF WORK WHICH WILL BE REQUIRED.

Plotted Date: 1/17/2013

DESIGNER/DRAFTER: SKW
CHECKED BY: JMK
SCALE AS NOTED

STATE OF CONNECTICUT
DEPARTMENT OF TRANSPORTATION

Filename: ...\FD_MST_ELE_0118_0163_E010.dgn

SIGNATURE/BLOCK: OFFICE OF ENGINEERING
APPROVED BY: DATE:

PROJECT TITLE: ROCKY HILL-GLASTONBURY FERRY OFFICE BUILDING

TOWN: ROCKY HILL

DRAWING TITLE: ELECTRICAL DETAILS 3

PROJECT NO. 118-0163
DRAWING NO. E-010
SHEET NO. 09.10