10 - ENVIRONMENTAL
INDEX OF DRAWINGS

DRAWING NUMBER	DRAWING TITLE	DRAWING NUMBER	DRAWING TITLE
10.01	ENVIRONMENTAL INDEX		
10.02	ENVIRONMENTAL PLAN		
10.03	ENVIRONMENTAL DETAILS		
10.04	WASTE STOCKPILE AREA AND TRUCK ROUTE		
10.05	WASTE STOCKPILE AREA (WSA) DETAILS		

DESIGNED BY:
CONSULTANT: CDR MAGUIRE

David R. Stock
2013.05.16
12:03:36
-04'00'

REV.	DATE	REVISION DESCRIPTION	SHEET NO.
-	-	-	-
-	-	-	-
-	-	-	-
-	-	-	-
-	-	-	-
-	-	-	-

THE INFORMATION, INCLUDING ESTIMATED QUANTITIES OF WORK, SHOWN ON THESE SHEETS IS BASED ON LIMITED INVESTIGATIONS BY THE STATE AND IS IN NO WAY WARRANTED TO INDICATE THE CONDITIONS OF ACTUAL QUANTITIES OF WORK WHICH WILL BE REQUIRED.

Plotted Date: 2/25/2013

DESIGNER/DRAFTER: MJB
CHECKED BY: DRS
SCALE IN FEET
0 10 20
SCALE 1"=10'

STATE OF CONNECTICUT
DEPARTMENT OF TRANSPORTATION

Filename: ...\19097.57 0118-0163-ENV-001.dgn

SIGNATURE/
BLOCK:

PROJECT TITLE:
ROCKY HILL-GLASTONBURY
FERRY OFFICE BUILDING

TOWN: ROCKY HILL

DRAWING TITLE: ENVIRONMENTAL INDEX

PROJECT NO. 118-0163
DRAWING NO. ENV 01
SHEET NO. 10.01

Connecticut Department of Transportation
QA/QC Format Check
PASS

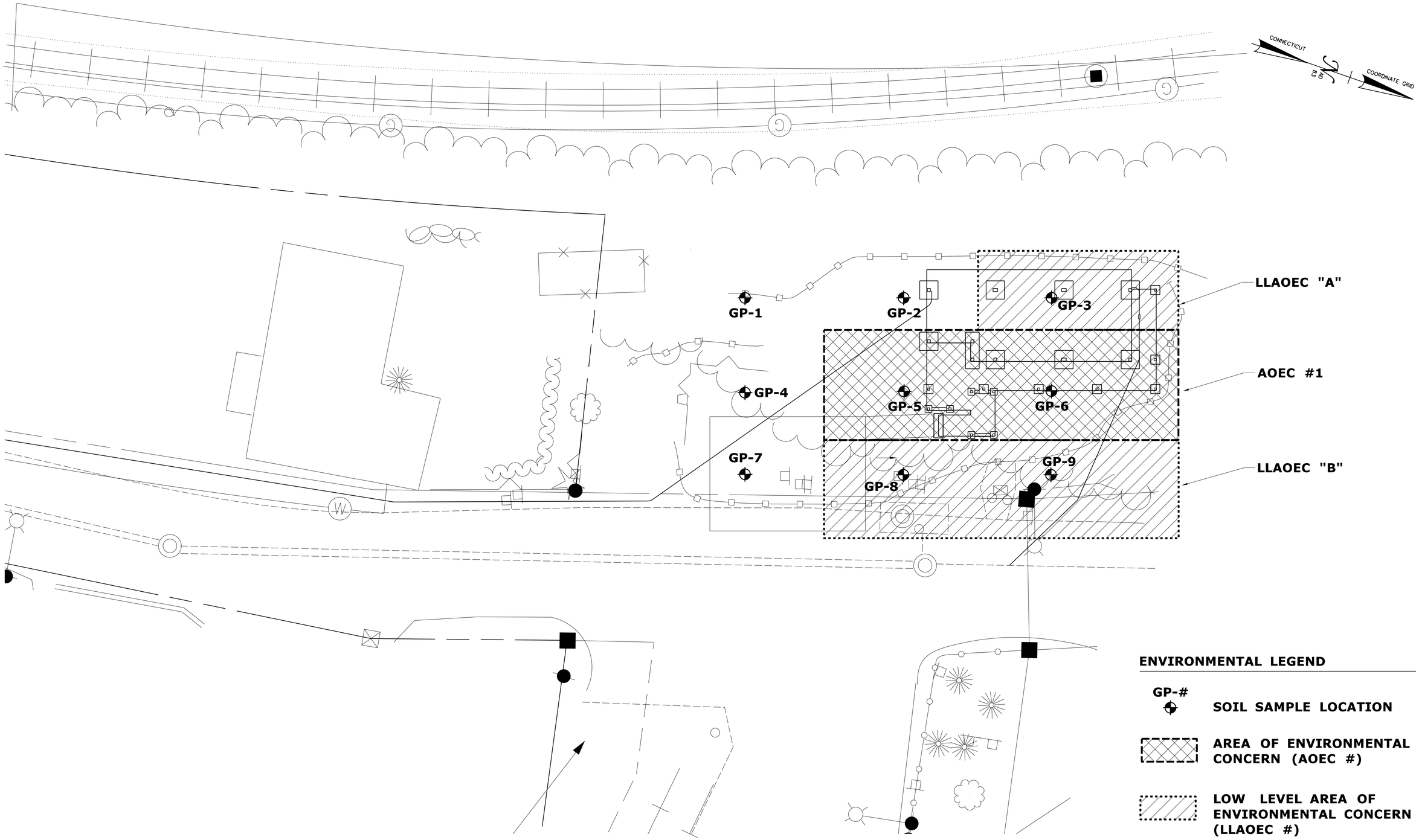

REV.	DATE	REVISION DESCRIPTION	SHEET NO.
-	-	-	-
-	-	-	-
-	-	-	-
-	-	-	-
-	-	-	-
-	-	-	-

THE INFORMATION, INCLUDING ESTIMATED QUANTITIES OF WORK, SHOWN ON THESE SHEETS IS BASED ON LIMITED INVESTIGATIONS BY THE STATE AND IS IN NO WAY WARRANTED TO INDICATE THE CONDITIONS OF ACTUAL QUANTITIES OF WORK WHICH WILL BE REQUIRED.

Plotted Date: 2/25/2013

DESIGNER/DRAFTER: **MJB**

CHECKED BY: **DRS**

SCALE IN FEET

0 10 20

SCALE 1"=10'

STATE OF CONNECTICUT
DEPARTMENT OF TRANSPORTATION

Filename: ...\19097.57 0118-0163-ENV-002.dgn

SIGNATURE/ BLOCK:

CDR Maguire
2080 Silas Deane Highway
Rocky Hill, CT 06067

PROJECT TITLE:

ROCKY HILL-GLASTONBURY FERRY OFFICE BUILDING

TOWN: **ROCKY HILL**

DRAWING TITLE: **ENVIRONMENTAL PLAN**

PROJECT NO. **118-0163**

DRAWING NO. **ENV 02**

SHEET NO. **10.02**

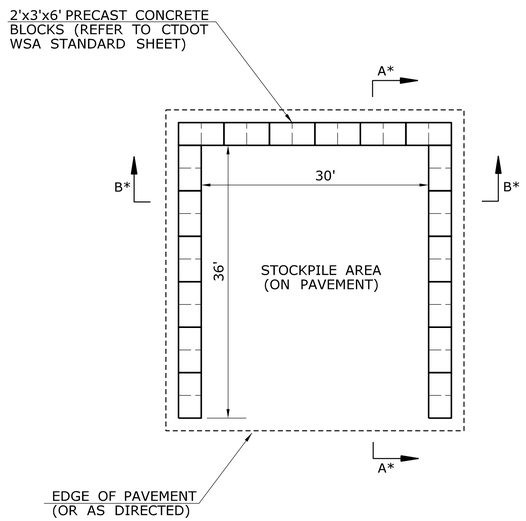

TYPICAL WASTE STOCKPILE AREA BIN DETAIL

NOT TO SCALE

* REFER TO CTDOT WSA STANDARD SHEET

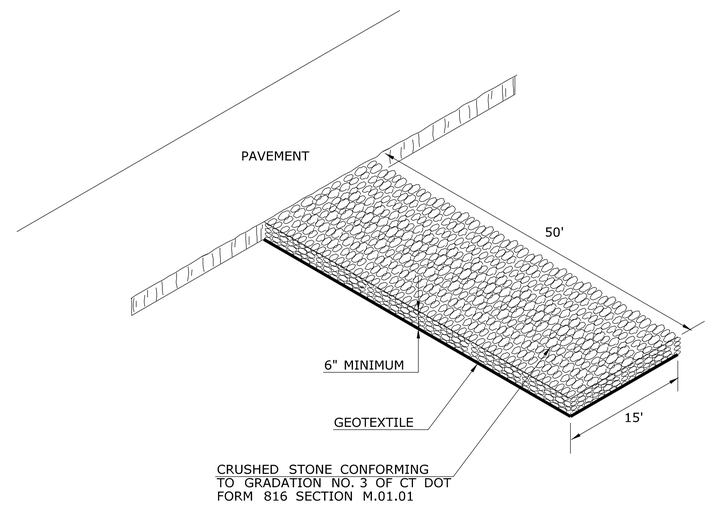

CONSTRUCTION ENTRANCE ANTI-TRACKING PAD

NOT TO SCALE

REV.	DATE	REVISION DESCRIPTION	SHEET NO.
-	-	-	-
-	-	-	-
-	-	-	-
-	-	-	-
-	-	-	-
-	-	-	-

THE INFORMATION, INCLUDING ESTIMATED QUANTITIES OF WORK, SHOWN ON THESE SHEETS IS BASED ON LIMITED INVESTIGATIONS BY THE STATE AND IS IN NO WAY WARRANTED TO INDICATE THE CONDITIONS OF ACTUAL QUANTITIES OF WORK WHICH WILL BE REQUIRED.

Plotted Date: 3/4/2013

DESIGNER/DRAFTER: **MJB**

CHECKED BY: **DRS**

SCALE IN FEET 0 10 20

SCALE 1"=10'

STATE OF CONNECTICUT
DEPARTMENT OF TRANSPORTATION

Filename: ...\19097.57_0118-0163-ENV-003.dgn

SIGNATURE/ BLOCK:

CDR Maguire
2080 Silas Deane Highway
Rocky Hill, CT 06067

STATE OF CONNECTICUT — DAVID R. ZIPP — No. 17198 — LICENSED PROFESSIONAL ENGINEER

PROJECT TITLE:

ROCKY HILL-GLASTONBURY FERRY OFFICE BUILDING

TOWN: **ROCKY HILL**

DRAWING TITLE: **ENVIRONMENTAL DETAILS**

PROJECT NO. **118-0163**

DRAWING NO. **ENV 03**

SHEET NO. **10.03**

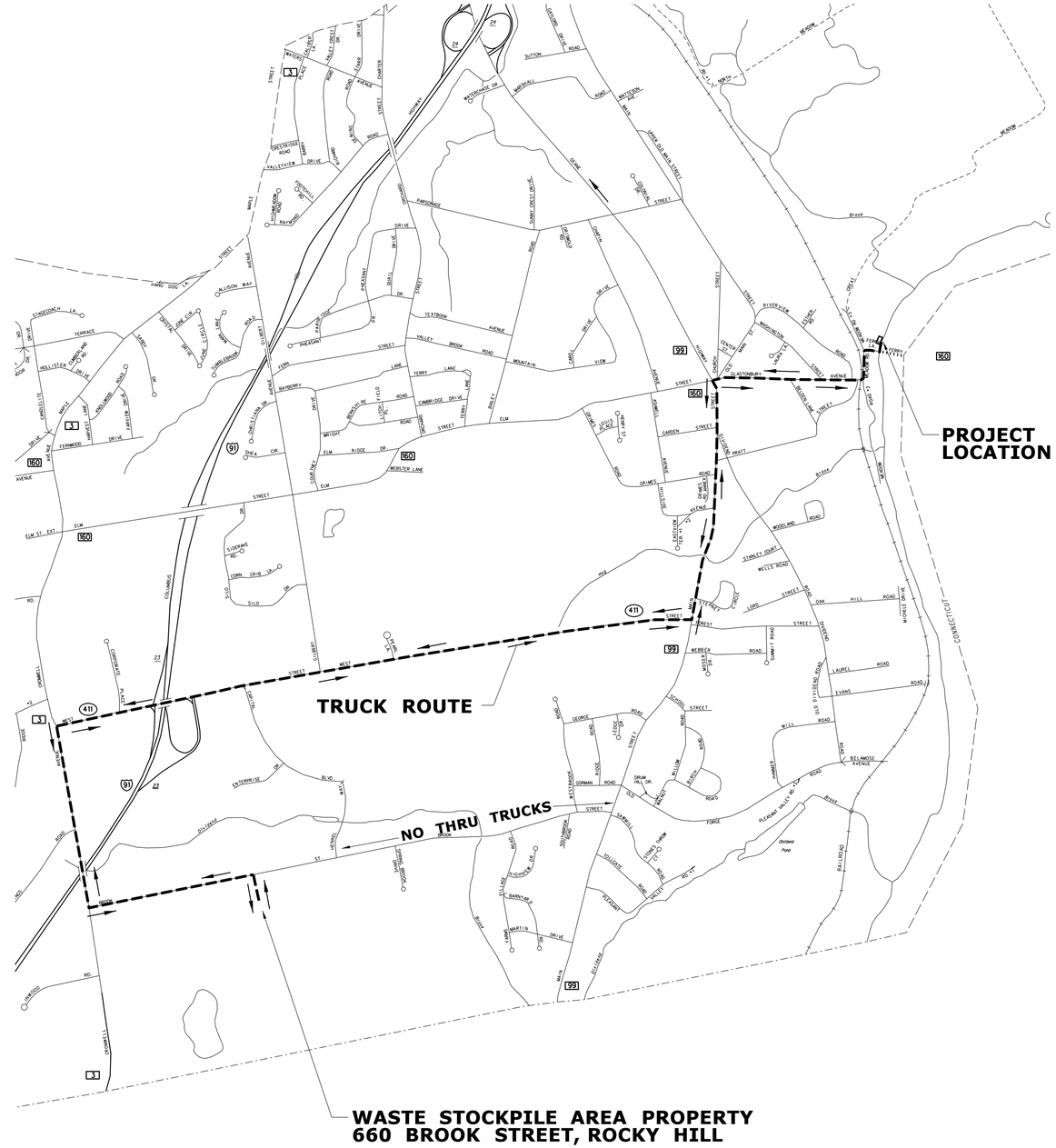

WASTE STOCKPILE AREA NOTES:

1. THE CONTRACTOR SHALL CONSTRUCT ONE (1) - 36'x30' WSA BIN, CAPABLE OF HOLDING 250 CY OF SOIL, ON PROPERTY LOCATED AT 660 BROOK STREET, ROCKY HILL.
2. THE CONTRACTOR SHALL COORDINATE ACTIVITY WITH CONTACT PERSONS AS DESCRIBED IN THE SPECIAL PROVISIONS.
3. ACTUAL DIMENSIONS AND LOCATION OF WSA TO BE AS DIRECTED BY THE ENGINEER.

WASTE STOCKPILE AREA

NOT TO SCALE

TRUCK ROUTE

NOT TO SCALE

REV.	DATE	REVISION DESCRIPTION	SHEET NO.
-	-	-	-
-	-	-	-
-	-	-	-
-	-	-	-
-	-	-	-
-	-	-	-

THE INFORMATION, INCLUDING ESTIMATED QUANTITIES OF WORK, SHOWN ON THESE SHEETS IS BASED ON LIMITED INVESTIGATIONS BY THE STATE AND IS IN NO WAY WARRANTED TO INDICATE THE CONDITIONS OF ACTUAL QUANTITIES OF WORK WHICH WILL BE REQUIRED.

Plotted Date: 3/4/2013

DESIGNER/DRAFTER: **MJB**

CHECKED BY: **DRS**

SCALE AS NOTED

STATE OF CONNECTICUT
DEPARTMENT OF TRANSPORTATION

Filename: ...\19097.57 0118-0163-ENV-004.dgn

SIGNATURE/BLOCK:

STATE OF CONNECTICUT
DONALD R. SCHOLLER
No. 11598
LICENSED PROFESSIONAL ENGINEER

CDR Maguire
2080 Silas Deane Highway
Rocky Hill, CT 06067

PROJECT TITLE: **ROCKY HILL-GLASTONBURY FERRY OFFICE BUILDING**

TOWN: **ROCKY HILL**

DRAWING TITLE: **WASTE STOCKPILE AREA AND TRUCK ROUTE**

PROJECT NO. **118-0163**

DRAWING NO. **ENV 04**

SHEET NO. **10.04**

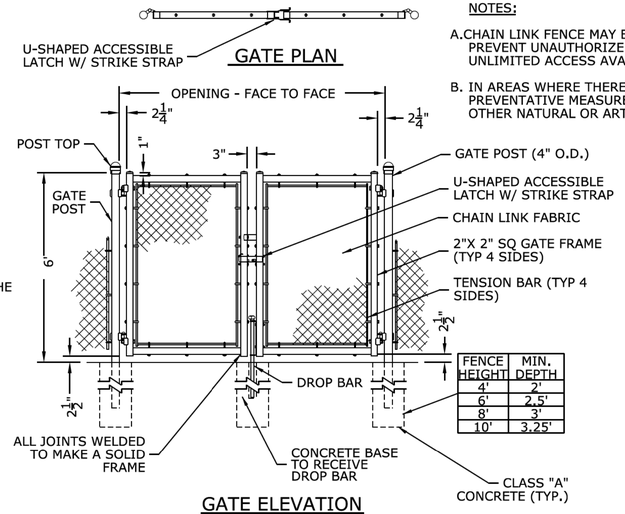

FENCE HEIGHT	MIN. DEPTH
4'	2'
6'	2.5'
8'	3'
10'	3.25'

NOTES:

A. CHAIN LINK FENCE MAY BE UTILIZED IN RESIDENTIAL NEIGHBORHOODS TO PREVENT UNAUTHORIZED ENTRY ONTO STOCKPILES WHERE THERE IS UNLIMITED ACCESS AVAILABLE TO PEDESTRIANS AND/OR TRAFFIC.

B. IN AREAS WHERE THERE IS LIMITED ACCESS, OTHER APPROPRIATE PREVENTATIVE MEASURES MAY BE ACCOMPLISHED THROUGH THE USE OF OTHER NATURAL OR ARTIFICIAL BARRIERS.

NOTE:

GATES SHOULD HAVE THE ABILITY TO SWING 180 DEGREES.

1 TYPICAL DOUBLE SWING GATES

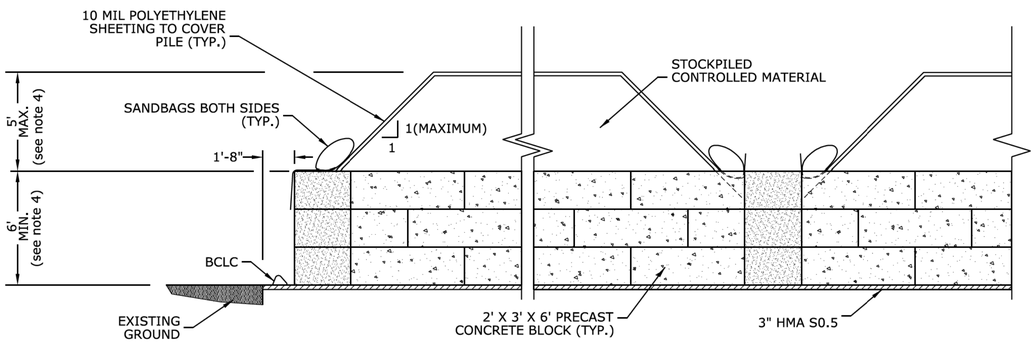

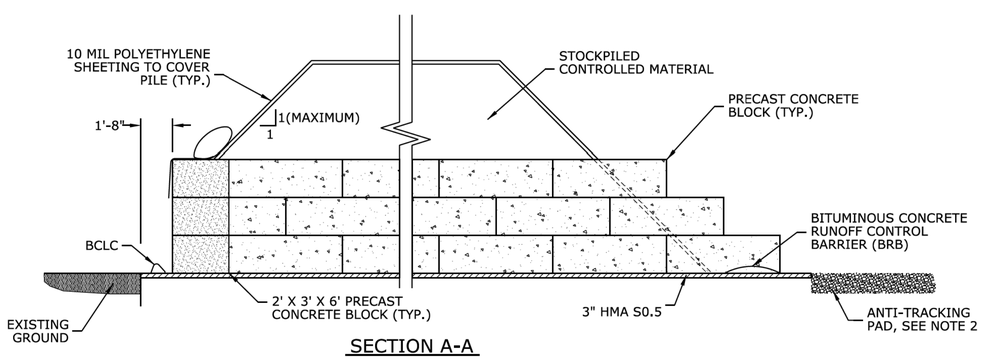

2 WASTE STOCKPILE AREA DETAIL

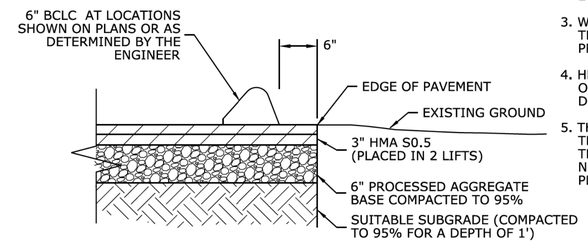

NOTE:

IF THE WSA IS TO BE LOCATED ON EXISTING PAVEMENT SUCH AS ROADWAY AND OR PARKING LOT A COMPOSITE PAVEMENT STRUCTURE WILL NOT BE REQUIRED.

3 COMPOSITE PAVEMENT STRUCTURE DETAIL

GENERAL NOTES:

1. WSA INSTALLATION AND ALL REQUIRED MATERIALS ARE AS INDICATED ON THE WSA PLAN.
2. ANTI-TRACKING PAD SHALL BE INSTALLED AS SHOWN ON THE WSA PLAN AND IN ACCORDANCE WITH "CONNECTICUT GUIDELINES FOR SOIL EROSION AND SEDIMENT CONTROL, 2002-SECTION 5-12."
3. WHERE FEASIBLE, A MINIMUM DISTANCE OF 5' IMMEDIATELY OUTSIDE THE PERIMETER OF THE WSA CONCRETE BLOCK WALLS SHALL REMAIN CLEAR AND FREE OF ANY OBJECT TO PROVIDE ACCESS FOR MAINTENANCE.
4. HEIGHT OF THE CONCRETE BLOCKS, STOCKPILED CONTROLLED MATERIAL AND CONFIGURATION OF THE BIN(S) MAY VARY BASED ON THE SIZE AS INDICATED ON THE WSA PLAN OR AS DIRECTED BY THE ENGINEER.
5. THE WSA SURFACE SHALL BE SUFFICIENTLY IMPERVIOUS TO PREVENT OR MINIMIZE THE TRANSFER OR INFILTRATION OF CONTAMINANTS FROM THE STOCKPILES TO THE GROUND. THE WSA SURFACE WILL VARY BASED ON PROJECT SPECIFICS AND MAY BE CONSTRUCTED ON NEW OR EXISTING PAVEMENT, BEDDING SAND, OR OTHER MATERIAL AS SHOWN ON THE WSA PLAN OR THE AREAS OF ENVIRONMENTAL CONCERN PLAN(S).

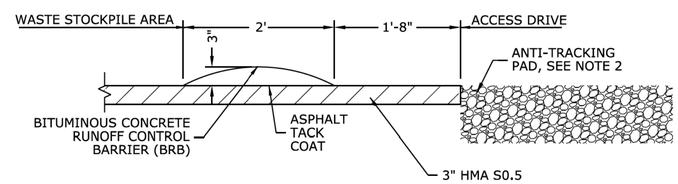

NOTE:

INSTALLATION OF BRB SHALL BE ON PAVEMENT ONLY AND IS BASED ON FIELD CONDITIONS OR AS DETERMINED BY THE ENGINEER.

4 BITUMINOUS CONCRETE RUNOFF CONTROL BARRIER (BRB) DETAIL

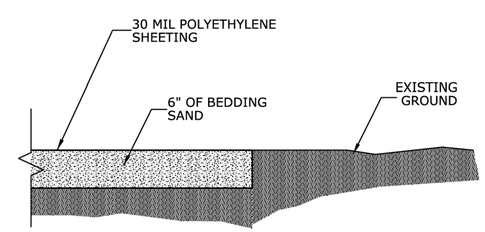

5 BEDDING SAND OVER EXISTING GROUND DETAIL

REV.	DATE	REVISION DESCRIPTION	SHEET NO.
-	-	-	-
-	-	-	-
-	-	-	-
-	-	-	-
-	-	-	-
-	-	-	-
-	-	-	-

THE INFORMATION, INCLUDING ESTIMATED QUANTITIES OF WORK, SHOWN ON THESE SHEETS IS BASED ON LIMITED INVESTIGATIONS BY THE STATE AND IS IN NO WAY WARRANTED TO INDICATE THE CONDITIONS OF ACTUAL QUANTITIES OF WORK WHICH WILL BE REQUIRED.

DESIGNER/DRAFTER:

CHECKED BY:

Plotted Date: 5/16/2013

Filename:

NOT TO SCALE

STATE OF CONNECTICUT
DEPARTMENT OF TRANSPORTATION

SIGNATURE/BLOCK:

CDR Maguire
2080 Silas Deane Highway
Rocky Hill, CT 06067

PROJECT TITLE: ROCKY HILL - GLASTONBURY FERRY OFFICE BUILDING

TOWN: ROCKY HILL

DRAWING TITLE: **WASTE STOCKPILE AREA (WSA) DETAILS**

PROJECT NO. 118-163

DRAWING NO. **ENV-5**

SHEET NO. **10.05**