06 - STRUCTURAL
INDEX OF DRAWINGS

DRAWING NUMBER	DRAWING TITLE	DRAWING NUMBER	DRAWING TITLE
S-000	STRUCTURAL INDEX OF DRAWINGS		
S-001	GENERAL NOTES AND ABBREVIATIONS		
S-002	FOUNDATION PLAN, SECTIONS AND DETAILS		
S-003	FOUNDATION DETAILS-1		
S-004	FOUNDATION DETAILS-2		
S-005	BEAM ELEVATIONS, SECTIONS AND DETAILS		
S-006	FLOOR FRAMING PLAN, SECTIONS AND DETAILS		
S-007	FLOOR FRAMING PLAN, SECTIONS AND DETAILS		

THE DESIGN APPEARS TO CONFORM TO APPLICABLE CRITERIA. APPROVAL IS NOT TO BE CONSTRUED TO MEAN THAT ALL ASPECTS OF THE DESIGN HAVE BEEN PERSONALLY CHECKED BY THE UNDERSIGNED.

Theodore H. Nezames
2013.05.08 08:35:39-04'00'

TRANSPORTATION PRINCIPAL ENGINEER

REV.	DATE	REVISION DESCRIPTION	SHEET NO.
-	-	-	-
-	-	-	-
-	-	-	-
-	-	-	-
-	-	-	-
-	-	-	-

THE INFORMATION, INCLUDING ESTIMATED QUANTITIES OF WORK, SHOWN ON THESE SHEETS IS BASED ON LIMITED INVESTIGATIONS BY THE STATE AND IS IN NO WAY WARRANTED TO INDICATE THE CONDITIONS OF ACTUAL QUANTITIES OF WORK WHICH WILL BE REQUIRED.

Plotted Date: 1/11/2013

DESIGNER/DRAFTER: RPL/SAB
CHECKED BY: RPL
SCALE AS NOTED

STATE OF CONNECTICUT
DEPARTMENT OF TRANSPORTATION

Filename: ...\FD_MST_STR_0118_0163_S000.dgn

SIGNATURE/BLOCK:
OFFICE OF ENGINEERING
APPROVED BY: DATE:

PROJECT TITLE:
ROCKY HILL - GLASTONBURY FERRY OFFICE BUILDING

TOWN: ROCKY HILL

DRAWING TITLE: STRUCTURAL INDEX OF DRAWINGS

PROJECT NO. 118-0163
DRAWING NO. S-000
SHEET NO. 06.01

Connecticut Department of Transportation
QA/QC Format Check
PASS

CODES AND REFERENCES

1. ALL WORK SHALL CONFORM TO THE STATE OF CONNECTICUT BUILDING CODE AND THE CONTRACT DOCUMENTS.

DESIGN LOADS

1. ROOF SNOW LOAD
   a. GROUND SNOW LOAD, Pg = 30 PSF.
   b. FLAT-ROOF SNOW LOAD, Pf = 30 PSF.
   c. EXPOSURE FACTOR, Ce = 1.0
   d. SNOW IMPORTANCE FACTOR, Is = 1.2
2. WIND LOAD
   a. BASIC WIND SPEED, 100 MPH.
   b. WIND IMPORTANCE FACTOR, Iw = 1.15
   c. EXPOSURE B
3. SEISMIC LOAD
   a. PEAK VELOCITY-RELATED ACCELERATION, Av = 0.11
   b. PEAK ACCELERATION, Aa = 0.15
   c. SEISMIC IMPORTANCE FACTOR, Ie = 1.5
   d. SEISMIC USE GROUP III
   e. SITE CLASSIFICATION - C
   f. LATERAL LOAD-RESISTING SYSTEMS:
      PLYWOOD SHEAR WALLS
      REINFORCED CONCRETE BEAMS AND COLUMNS
   g. RESPONSE MODIFICATION FACTOR, R = 5
      DEFLECTION AMPLIFICATION FACTOR, Cd = $2\frac{1}{2}$
   h. ANALYSIS PROCEDURE UTILIZED - EQUIVALENT LATERAL FORCE PROCEDURE
   i. SEISMIC DESIGN CATEGORY C.
   j. SEISMIC LOAD FACTORS, Ss =0.239, S1 =.063
      (SDs = 0.1912, SD1 = 0.0714)

GENERAL NOTES

1. THE STRUCTURAL DRAWINGS SHALL BE COORDINATED WITH OTHER DISCIPLINE DRAWINGS AND WITH EQUIPMENT MANUFACTURERS TO ENSURE THAT OPENINGS IN THE ROOF AND WALLS ARE PROVIDED WITH THE REQUIRED APPURTENANT FRAMING OR SUPPORT SYSTEM.
2. DIMENSIONS AND DETAILS RELATED TO THE SIZE AND LOCATION OF EQUIPMENT SHALL BE VERIFIED WITH THE EQUIPMENT MANUFACTURER PRIOR TO CONSTRUCTION.
3. SIZES AND LOCATIONS OF EMBEDDED MECHANICAL AND ELECTRICAL FIXTURES SHALL BE VERIFIED PRIOR TO CONSTRUCTION.
4. METHODS, PROCEDURES AND SEQUENCES OF CONSTRUCTION ARE THE RESPONSIBILITIES OF THE CONTRACTOR. THE CONTRACTOR IS RESPONSIBLE FOR IDENTIFYING AND IMPLEMENTING THE NECESSARY PRECAUTIONS TO MAINTAIN AND ENSURE THE INTEGRITY OF THE STRUCTURE AT ALL STAGES OF CONSTRUCTION.
5. TEMPORARY BRACING, SHEETING, SHORING AND OTHER SIMILAR SAFETY PRECAUTIONARY MEASURES DURING CONSTRUCTION ARE THE RESPONSIBILITIES OF THE CONTRACTOR AND SHALL BE DESIGNED BY A REGISTERED PROFESSIONAL ENGINEER EMPLOYED BY HIM.

WOOD

1. BEAMS, JOISTS, RAFTERS, STUDS, COLUMNS, LEDGERS, BLOCKINGS, PLATES

   SPECIES: SOUTHERN YELLOW PINE, GRADE NO.1

   ALLOWABLE STRESSES:

Fb	2,150 PSI (REPETITIVE USE)
Fb	1,850 PSI (SINGLE USE)
Fv	175 PSI
Fc	1,850 PSI ; Ft 1,050 PSI
E	1,700,000 PSI

2. ALL HARDWARES, SUCH AS BUT NOT LIMITED TO CLIPS, BEAM HANGERS, JOIST HANGERS, POST CAPS, METAL STRAPS, METAL PLATES, FASTENERS, FRAMING BOLTS AND ANCHOR BOLTS SHALL BE STAINLESS STEEL.
3. TREAT ALL ROUGH CARPENTRY ITEMS IN THE MAIN FLOOR FRAMING, INCLUDING JOISTS, SILL PLATES, LEDGERS, BLOCKINGS AND ALL FRAMING MEMBERS IN THE EXTERIOR BALCONY/DECK AND STAIRS WITH A PRESSURE-APPLIED WOOD PRESERVATIVE.
4. FOR THE ROOF FRAMING AND FLOOR FRAMING, THE CONTRACTOR MAY SUBMIT TO THE ENGINEER FOR REVIEW AND APPROVAL, DRAWINGS AND DESIGN CALCULATIONS FOR A SIMILAR AND EQUAL METHOD OF CONSTRUCTION AND MATERIALS, SUCH AS THE USE OF WOOD ROOF TRUSSES AND ENGINEERED COMPOSITE WOOD JOISTS.
5. ANCHOR BOLTS, WOOD TO CONCRETE, SHALL COMPLY WITH ASTM A 307, GRADE A, STAINLESS STEEL.

CONCRETE NOTES

1. FOUNDATIONS SHALL BE PLACED ON 6 INCHES MINIMUM OF COMPACTED GRANULAR FILL IN ACCORDANCE WITH FORM 816, SECTION 2.13. COMPACTION SHALL BE DONE STATICALLY. EXTEND THE LIMITS OF GRANULAR FILL BY 2 FEET HORIZONTALLY OUTSIDE THE ENTIRE FOOTPRINT OF THE FOOTING. THE AREA OUTSIDE OF THE LIMITS OF GRANULAR FILL IS TO HAVE THE FOUNDATION PREPARATION IN ACCORDANCE WITH FORM 816 SECTION 2.03.03-2.
2. REINFORCED CONCRETE SHALL BE IN ACCORDANCE WITH ACI 318, "BUILDING CODE REQUIREMENTS FOR REINFORCED CONCRETE".
3. ALL CAST-IN-PLACE CONCRETE SHALL BE NORMAL-WEIGHT AND SHALL BE CLASS 'F' IN ACCORDANCE WITH FORM 816, SECTION M.03. CONCRETE SHALL HAVE A MINIMUM 28-DAY COMPRESSIVE STRENGTH OF 4,000 PSI.
4. REINFORCING BARS SHALL BE DEFORMED BILLET STEEL CONFORMING TO ASTM A615, GEADE 60. EPOXY-COATED REINFORCEMENT AND TIES SHALL BE USED FOR FOOTING PADS AND COLUMNS. NON-COATED BARS SHALL BE USED FOR BEAMS UNLESS SUCH MEMBERS ARE NOT IN CONTACT WITH THE GROUND, OTHERWISE, EPOXY-COATED REINFORCEMENT AND TIES SHALL ALSO BE USED.
5. COORDINATE PLANS WITH CIVIL, MECHANICAL AND ELECTRICAL DRAWINGS FOR MISCELLANEOUS CONCRETE WORK.
6. REINFORCEMENT DETAILS SHALL CONFORM TO ACI 318. ALL CONCRETE REINFORCEMENT SPLICES SHALL BE ACI 318 CLASS 'B' SPLICES, UNLESS OTHERWISE NOTED.
7. EXPOSED CORNERS OF CONCRETE SHALL HAVE A CHAMFER OF $\frac{3}{4}$" X $\frac{3}{4}$" UNLESS OTHERWISE NOTED.
8. REFER TO DRAWINGS FOR MINIMUM BAR COVERING.
9. CONCRETE MIX DESIGN WITH ADMIXTURES SHALL BE SUBMITTED TO THE ENGINEER FOR APPROVAL.

ABBREVIATIONS

BRG	BEARING
BFE	BOTTOM OF FOOTING ELEVATION
BOS	BOTTOM OF STEEL
℄	CENTER LINE
CJ	CONTROL (CONTRACTION) JOINT
CLR	CLEAR
COL	COLUMN
CONC	CONCRETE
CONC BLK	CONCRETE BLOCK
CONT	CONTINUOUS
DET	DETAIL
DIA; ø	DIAMETER
DL	DOUBLE ANGLE
EA	EACH
EL	ELEVATION
EQ	EQUAL
EJ	EXPANSION (ISOLATION) JOINT
EW	EACH WAY
FH	FLIPPED HORIZONTALLY
FV	FLIPPED VERTICALLY
FF	FINISH FLOOR
FT	FOOT
GRT	GIRT
HP	HIGH POINT
HT	HEIGHT
JT	JOINT
LP	LOW POINT
MAINT	MAINTENANCE
MATL	MATERIAL
MET	METAL
MFR	MANUFACTURER
MIN	MINIMUM
M.O.	MASONRY OPENING
NTS	NOT TO SCALE
O.C.	ON CENTER
OH	OVERHEAD
PL	PLATE
REINF	REINFORCED
REQ	REQUIRED
R.O.	ROUGH OPENING
SECT	SECTION
SIM	SIMILAR
SP	SPECIAL
SQ	SQUARE
STRUCT	STRUCTURAL
T & B	TOP AND BOTTOM
TOC	TOP OF CONCRETE
TOCh	TOP OF CHANNEL
TOB	TOP OF BEAM
TOG	TOP OF GRATE
TOJ	TOP OF JOIST
TOKW	TOP OF KNEEWALL
TOS	TOP OF STEEL
TS	STRUCTURAL STEEL TUBING
TYP	TYPICAL
UON	UNLESS OTHERWISE NOTED
UOS	UNLESS OTHERWISE SHOWN
W/	WITH
WWR	WELDED WIRE REINFORCEMENT

REV.	DATE	REVISION DESCRIPTION	SHEET NO.
-	-	-	-
-	-	-	-
-	-	-	-
-	-	-	-
-	-	-	-
-	-	-	-

THE INFORMATION, INCLUDING ESTIMATED QUANTITIES OF WORK, SHOWN ON THESE SHEETS IS BASED ON LIMITED INVESTIGATIONS BY THE STATE AND IS IN NO WAY WARRANTED TO INDICATE THE CONDITIONS OF ACTUAL QUANTITIES OF WORK WHICH WILL BE REQUIRED.

Plotted Date: 1/11/2013

DESIGNER/DRAFTER: RPL/SAB
CHECKED BY: RPL
SCALE AS NOTED

STATE OF CONNECTICUT
DEPARTMENT OF TRANSPORTATION

Filename: ...\FD_MST_STR_0118_0163_S001.dgn

SIGNATURE/BLOCK:
OFFICE OF ENGINEERING
APPROVED BY: DATE:

PROJECT TITLE:
ROCKY HILL - GLASTONBURY FERRY OFFICE BUILDING

TOWN: ROCKY HILL

DRAWING TITLE:
GENERAL NOTES AND ABBREVIATIONS

PROJECT NO. 118-0163
DRAWING NO. S-001
SHEET NO. 06.02

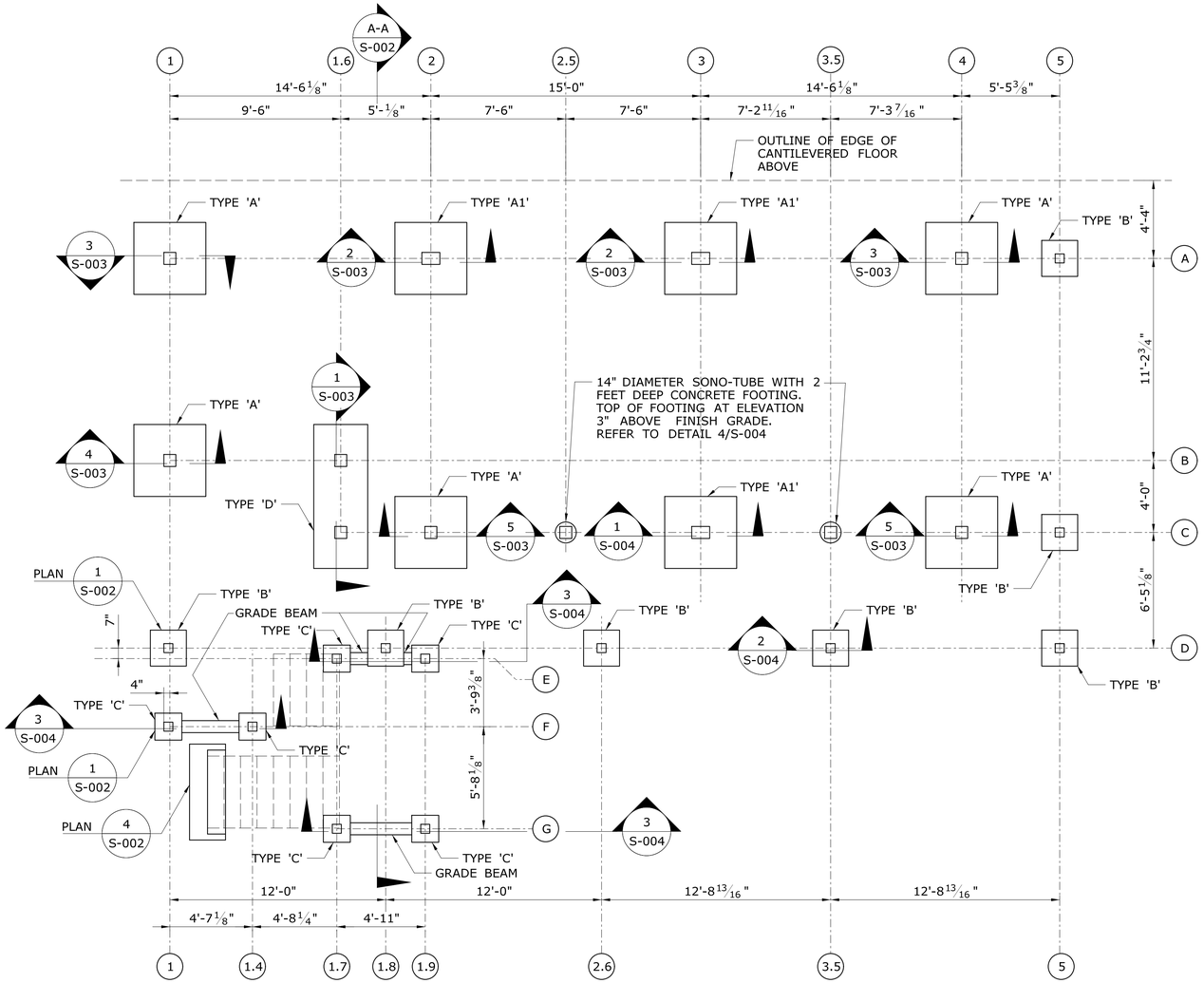

NOTE: UNLESS NOTED OTHERWISE, THE GEOMETRIC CENTER OF POSTS AND PADS SHALL COINCIDE WITH THE INTERSECTIONS OF GRID LINES.

FOUNDATION PLAN
SCALE 1/4"=1'-0"

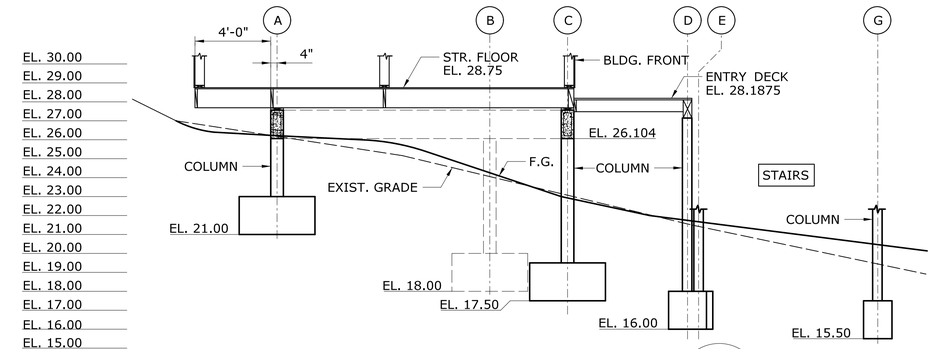

SCHEMATIC TRANSVERSE SECTION
SCALE: 1/4" = 1'-0"
A-A / S-002

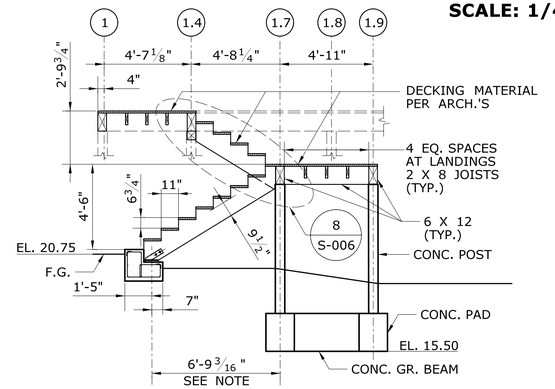

NOTE: THIS DIMENSION IS ONLY APPROXIMATE. THE EXACT DIMENSION WILL DEPEND ON THE ELEVATION OF THE FINAL FINISHED GRADE.

SECTION AT STAIRS
SCALE 1/4"=1'-0"
3 / S-002

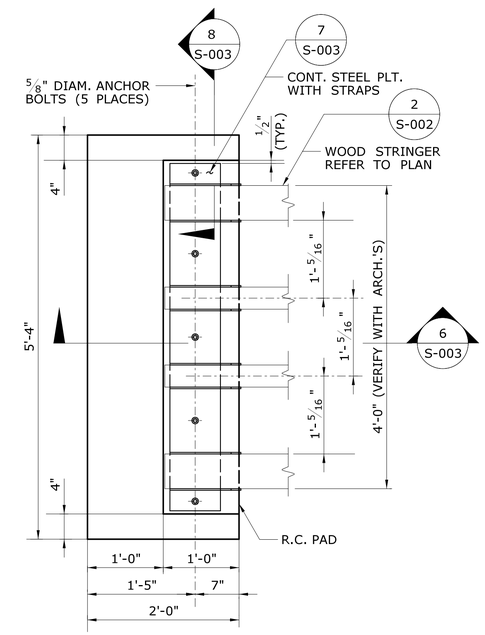

PLAN - STAIR PAD
SCALE: 1" = 1'-0"
4 / S-002

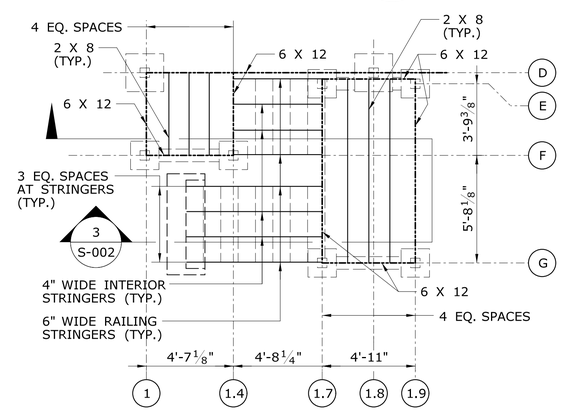

PLAN AT STAIRS
SCALE 1/4"=1'-0"
2 / S-002

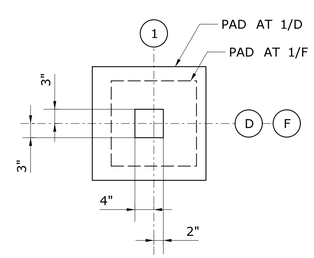

PLAN - PADS AT 1/D AND 1/F
SCALE: 3/4" = 1'-0"
1 / S-002

BOTTOM OF PAD ELEVATION	
PAD AT GRID LINES INTERSECTION	ELEVATION (FT.)
1/A, 2/A, 3/A, 4/A, 5/A	21.000
1/B	18.000
1.6/B,C, 2/C, 3/C, 4/C, 5/C	17.500
1/D, 1.8/D, 2.6/D, 3.5/D, 5/D, 1.7/E 1.9/E, 1/F, 1.4/F	16.000
1.7/G, 1.9/G	15.500

PAD SIZES (L' X W' X T')	
PAD TYPE	SIZE
'A'	4' X 4' X 2'
'A1'	4' X 4' X 2'
'B'	2' X 2' X 2'
'C'	1.5' X 1.5' X 2'
'D'	9.615' X 4' X 2'

REV.	DATE	REVISION DESCRIPTION	SHEET NO.
-	-	-	-
-	-	-	-
-	-	-	-
-	-	-	-
-	-	-	-
-	-	-	-

THE INFORMATION, INCLUDING ESTIMATED QUANTITIES OF WORK, SHOWN ON THESE SHEETS IS BASED ON LIMITED INVESTIGATIONS BY THE STATE AND IS IN NO WAY WARRANTED TO INDICATE THE CONDITIONS OF ACTUAL QUANTITIES OF WORK WHICH WILL BE REQUIRED.

Plotted Date: 3/6/2013

DESIGNER/DRAFTER: RPL/SAB
CHECKED BY: RPL
SCALE AS NOTED

STATE OF CONNECTICUT
DEPARTMENT OF TRANSPORTATION

Filename: ...\FD_MST_STR_0118_0163_S002.dgn

SIGNATURE/BLOCK: OFFICE OF ENGINEERING
APPROVED BY: DATE:

PROJECT TITLE: ROCKY HILL-GLASTONBURY FERRY OFFICE BUILDING

TOWN: ROCKY HILL

DRAWING TITLE: FOUNDATION PLAN, SECTIONS AND DETAILS

PROJECT NO. 118-0163
DRAWING NO. S-002
SHEET NO. 06.03

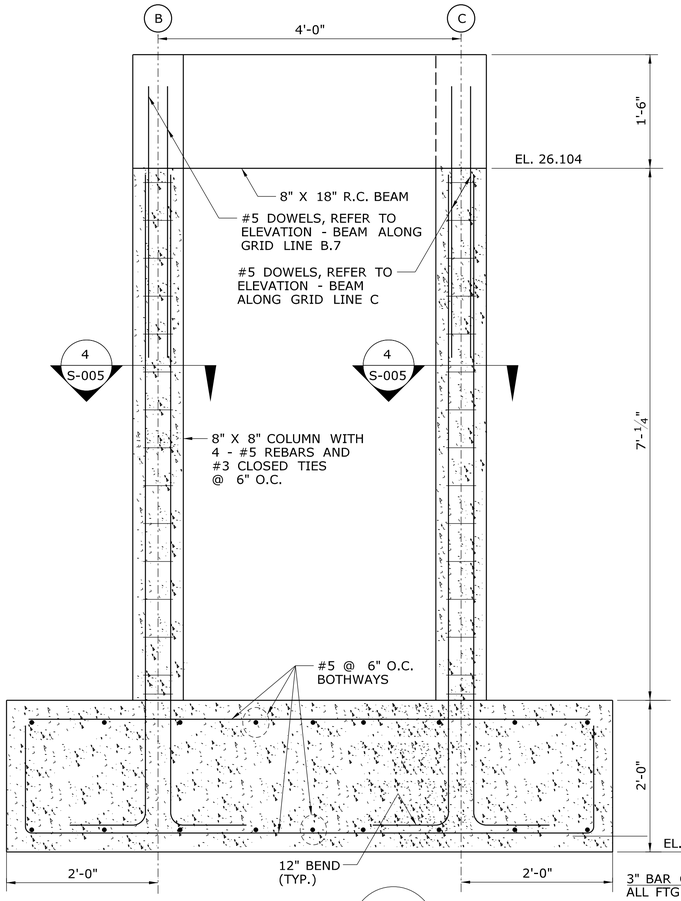

PAD SECTION 1 / S-003
SCALE: 1" = 1'-0"

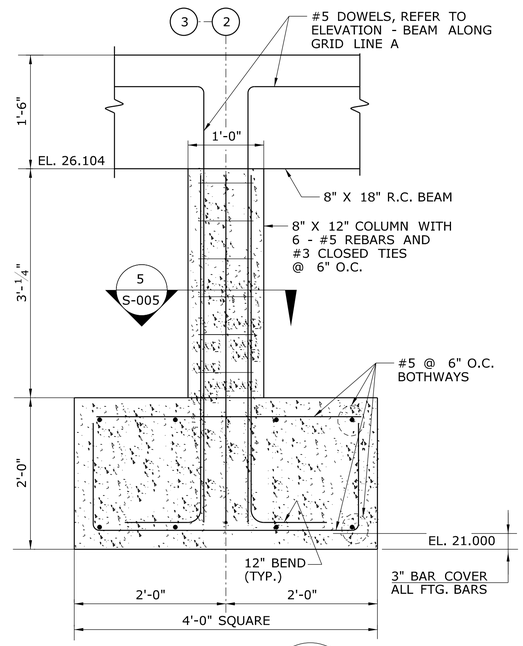

PAD SECTION 2 / S-003
SCALE: 1" = 1'-0"

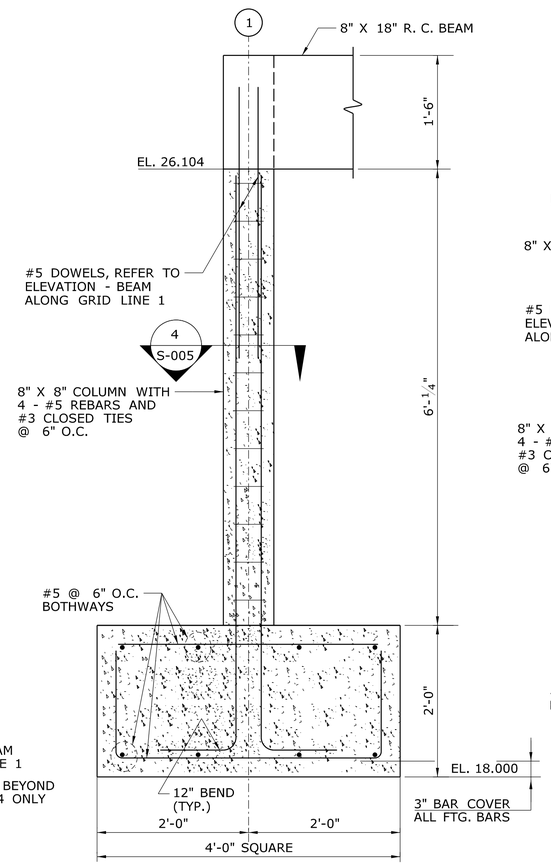

PAD SECTION 4 / S-003
SCALE: 1" = 1'-0"

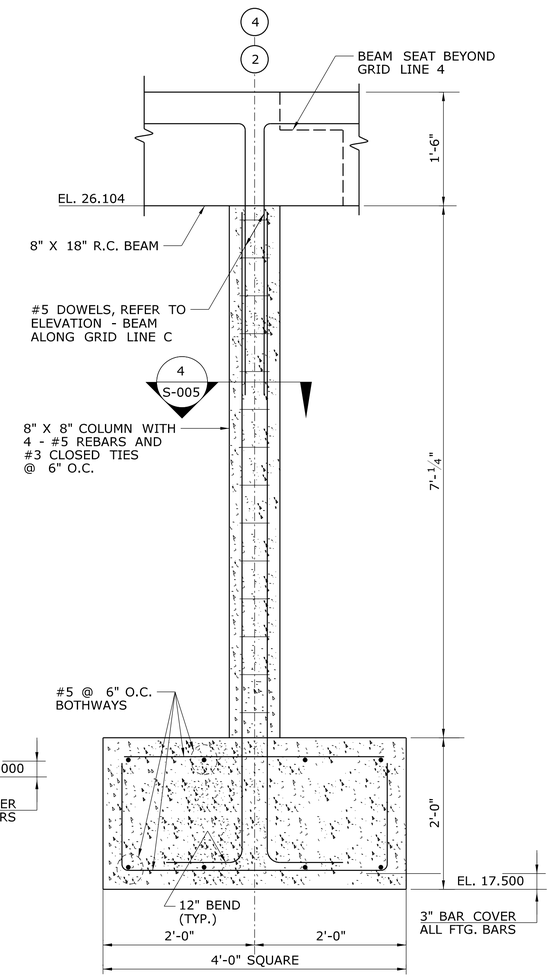

PAD SECTION 5 / S-003
SCALE: 1" = 1'-0"

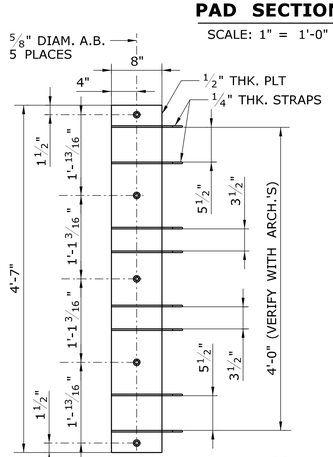

BASE/STRAP PLAN 7 / S-003
SCALE: 1 1/2" = 1'-0"

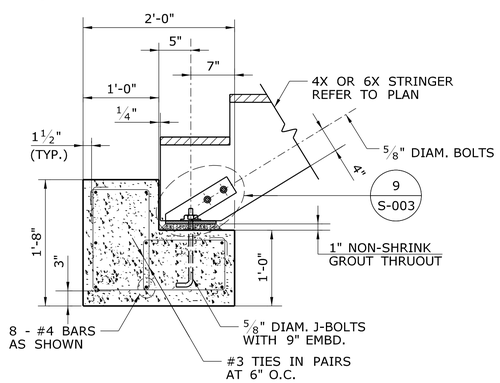

SECTION - STAIR PAD 6 / S-003
SCALE: 1" = 1'-0"

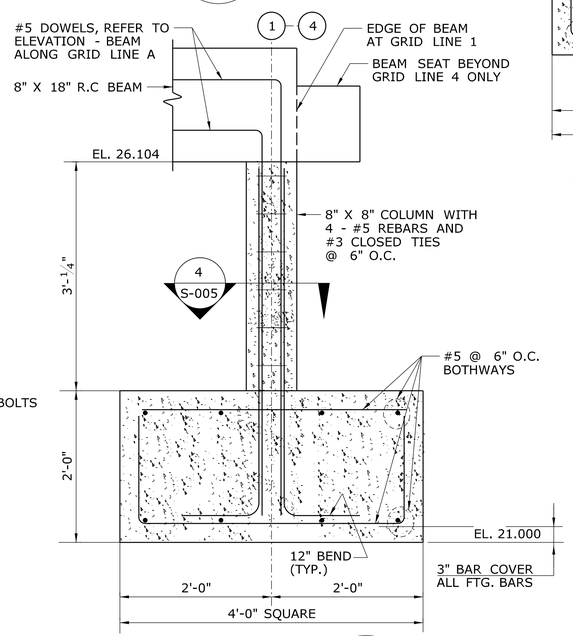

PAD SECTION 3 / S-003
SCALE: 1" = 1'-0"

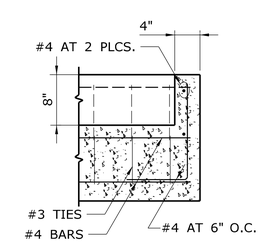

SECTION - STAIR PAD 8 / S-003
SCALE: 1" = 1'-0"

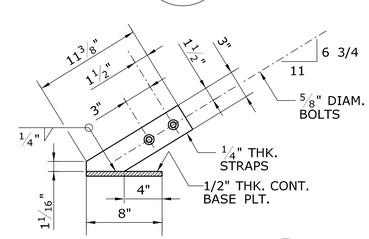

BASE/STRAP DETAIL 9 / S-003
SCALE: 1 1/2" = 1'-0"

REV.	DATE	REVISION DESCRIPTION	SHEET NO.
-	-	-	-
-	-	-	-
-	-	-	-
-	-	-	-
-	-	-	-
-	-	-	-

THE INFORMATION, INCLUDING ESTIMATED QUANTITIES OF WORK, SHOWN ON THESE SHEETS IS BASED ON LIMITED INVESTIGATIONS BY THE STATE AND IS IN NO WAY WARRANTED TO INDICATE THE CONDITIONS OF ACTUAL QUANTITIES OF WORK WHICH WILL BE REQUIRED.

Plotted Date: 1/11/2013

DESIGNER/DRAFTER: RPL/SAB
CHECKED BY: RPL
SCALE AS NOTED

STATE OF CONNECTICUT
DEPARTMENT OF TRANSPORTATION

Filename: ...\FD_MST_STR_0118_0163_S003.dgn

SIGNATURE/BLOCK: OFFICE OF ENGINEERING
APPROVED BY: DATE:

PROJECT TITLE: ROCKY HILL - GLASTONBURY FERRY OFFICE BUILDING

TOWN: ROCKY HILL

DRAWING TITLE: FOUNDATION DETAILS - 1

PROJECT NO. 118-0163
DRAWING NO. S-003
SHEET NO. 06.04

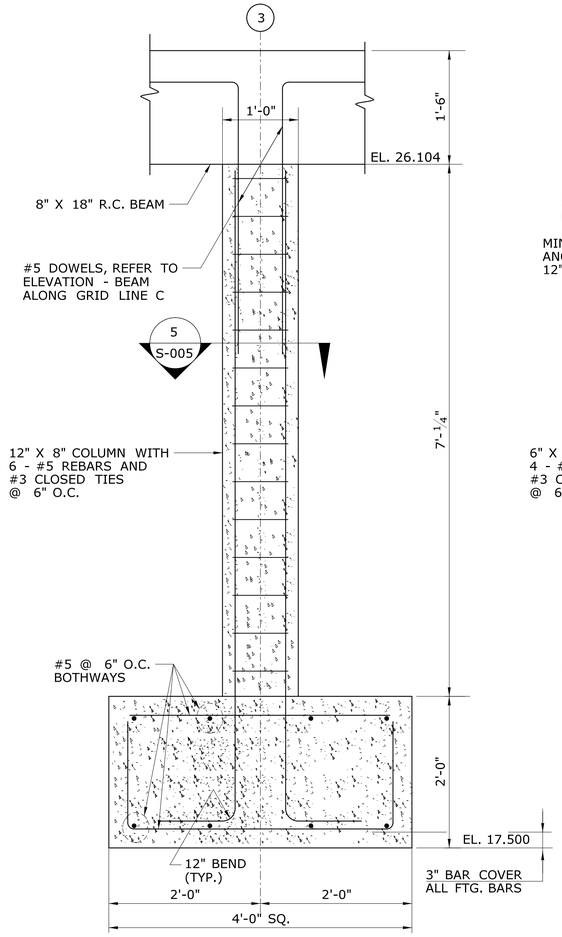

PAD SECTION 1 / S-004

SCALE: 1" = 1'-0"

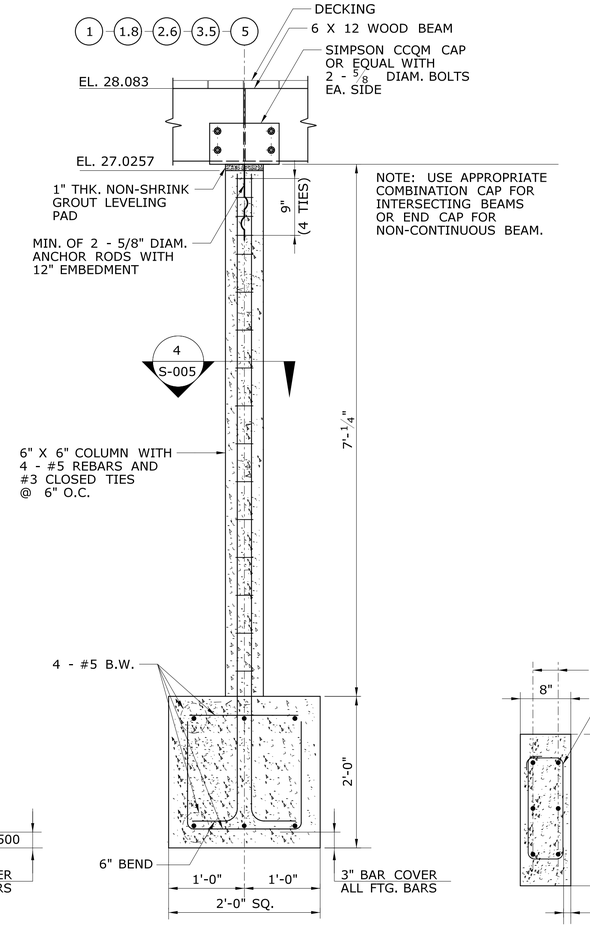

PAD SECTION 2 / S-004

SCALE: 1" = 1'-0"

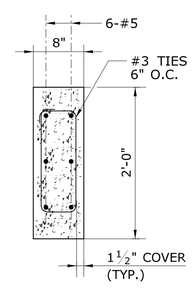

SECTION 3A / S-004

SCALE: 1" = 1'-0"

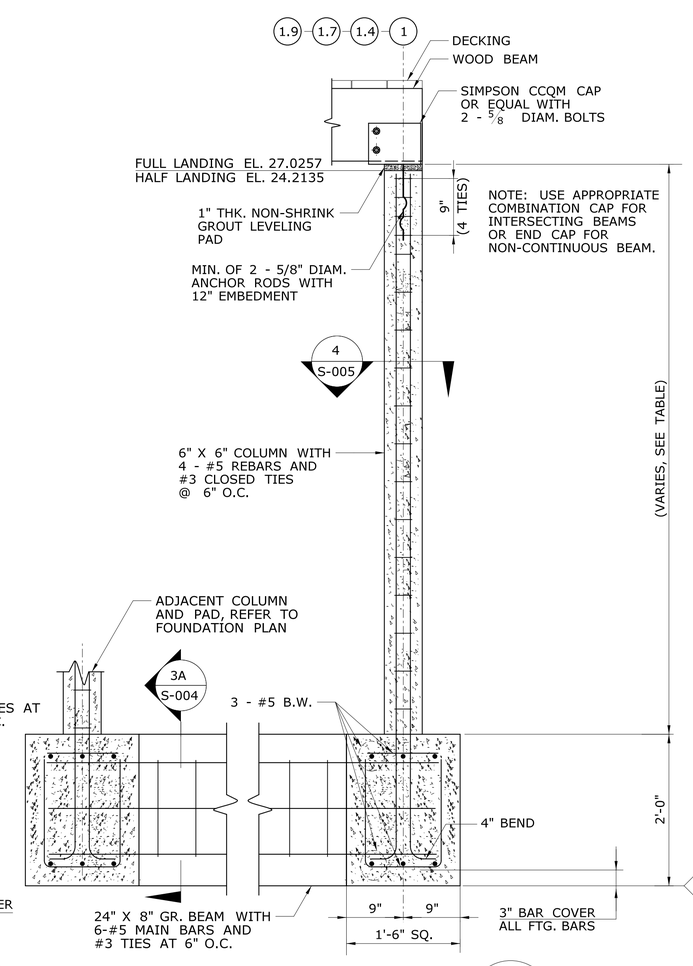

PAD SECTION 3 / S-004

SCALE: 1" = 1'-0"

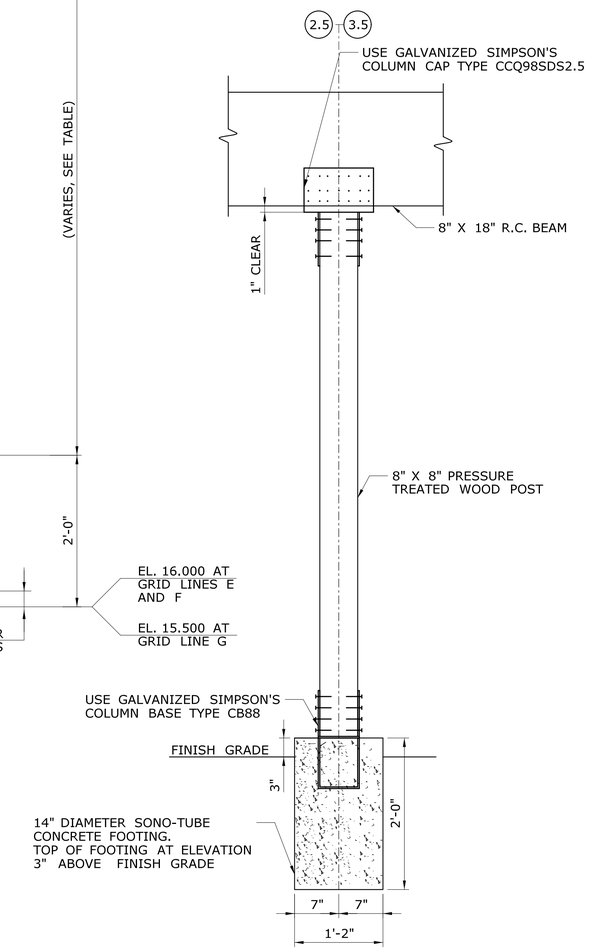

PAD SECTION 4 / S-004

SCALE: 1" = 1'-0"

COLUMN LENGTHS FOR 2/S-004	
LOCATION AT GRID LINES	LENGTH
5/A	4.0257 FT.
5/C	7.5257 FT.
1/D, 1.8/D, 2.6/D, 3.5/D, 5/D	9.0257 FT.

COLUMN LENGTHS FOR 3/S-004	
LOCATION AT GRID LINES	LENGTH
1.7/E, 1.9/E	6.2135 FT.
1.7/G, 1.9/G	6.7135 FT.
1/F, 1.4/F	9.0257 FT.

REV.	DATE	REVISION DESCRIPTION	SHEET NO.
-	-	-	-
-	-	-	-
-	-	-	-
-	-	-	-
-	-	-	-
-	-	-	-

THE INFORMATION, INCLUDING ESTIMATED QUANTITIES OF WORK, SHOWN ON THESE SHEETS IS BASED ON LIMITED INVESTIGATIONS BY THE STATE AND IS IN NO WAY WARRANTED TO INDICATE THE CONDITIONS OF ACTUAL QUANTITIES OF WORK WHICH WILL BE REQUIRED.

Plotted Date: 3/6/2013

DESIGNER/DRAFTER: RPL/SAB

CHECKED BY: RPL

SCALE AS NOTED

STATE OF CONNECTICUT
DEPARTMENT OF TRANSPORTATION

Filename: ...\FD_MST_STR_0118_0163_S004.dgn

SIGNATURE/BLOCK: OFFICE OF ENGINEERING

APPROVED BY: DATE:

PROJECT TITLE: ROCKY HILL - GLASTONBURY FRERRY OFFICE BUILDING

TOWN: ROCKY HILL

DRAWING TITLE: FOUNDATION DETAILS - 2

PROJECT NO. 118-0163

DRAWING NO. S-004

SHEET NO. 06.05

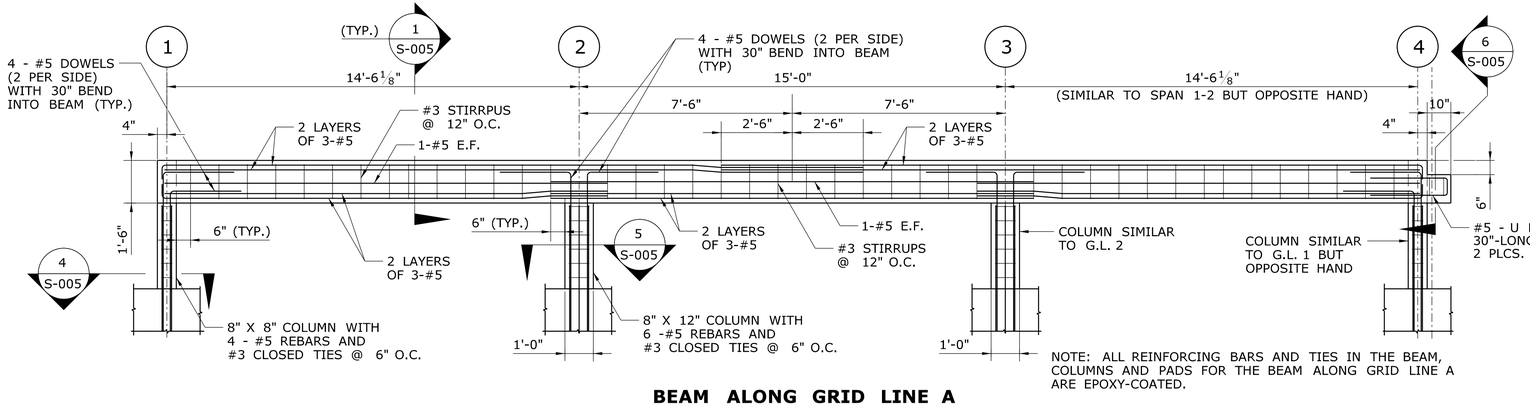

NOTE: ALL REINFORCING BARS AND TIES IN THE BEAM, COLUMNS AND PADS FOR THE BEAM ALONG GRID LINE A ARE EPOXY-COATED.

BEAM ALONG GRID LINE A

SCALE: 3/8" = 1'-0"

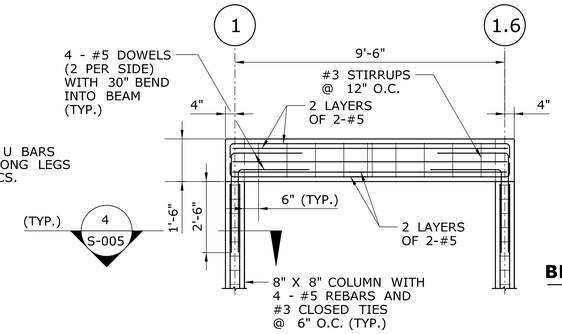

BEAM ALONG GRID LINE B

SCALE: 3/8" = 1'-0"

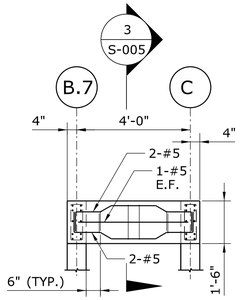

BEAM ALONG GRID LINE 1.6

SCALE: 3/8" = 1'-0"

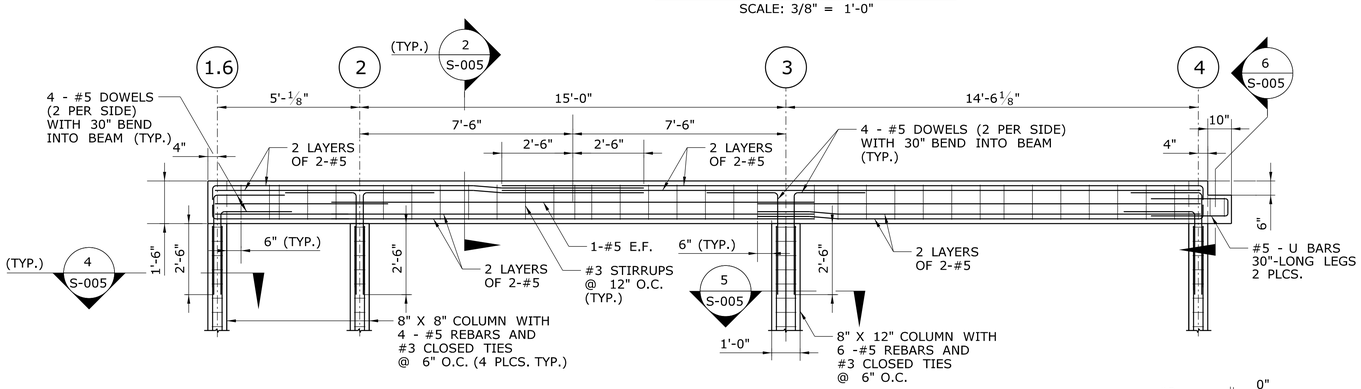

BEAM ALONG GRID LINE C

SCALE: 3/8" = 1'-0"

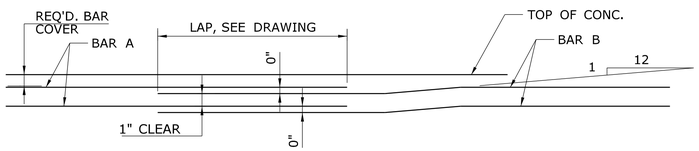

BEAM REBARS - LAPPING OF TOP BARS

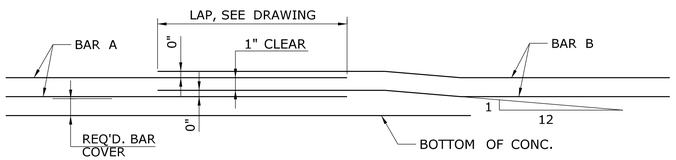

BEAM REBARS - LAPPING OF BOTTOM BARS

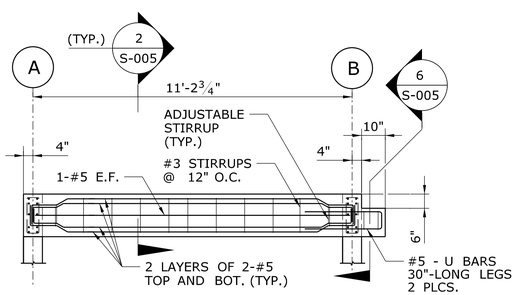

BEAM ALONG GRID LINE 1

SCALE: 3/8" = 1'-0"

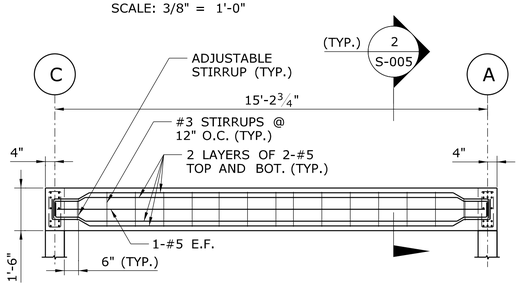

BEAM ALONG GRID LINE 4

SCALE: 3/8" = 1'-0"

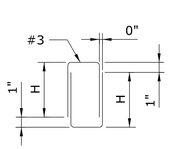

ADJUSTABLE STIRRUP

SCALE 1"=1'-0"

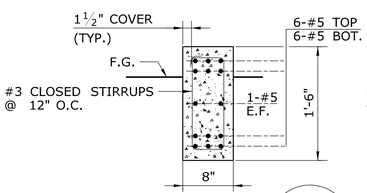

BEAM SECTION 1 / S-005

SCALE: 1" = 1'-0"

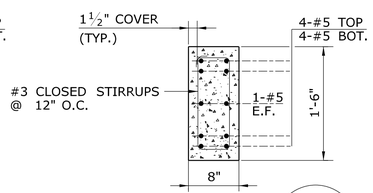

BEAM SECTION 2 / S-005

SCALE: 1" = 1'-0"

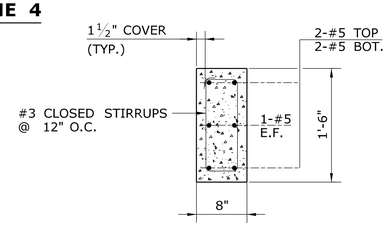

BEAM SECTION 3 / S-005

SCALE: 1" = 1'-0"

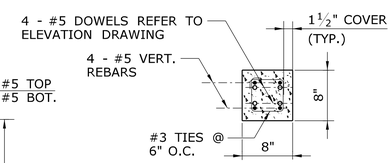

NOTE: 6" X 6" COLUMNS DO NOT HAVE DOWELS. USE SAME BARS AND TIES.

COLUMN SECTION 4 / S-005

SCALE: 1" = 1'-0"

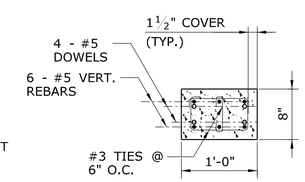

COLUMN SECTION 5 / S-005

SCALE: 1" = 1'-0"

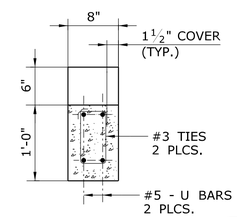

BEAM SECTION 6 / S-005

SCALE: 1" = 1'-0"

REV.	DATE	REVISION DESCRIPTION	SHEET NO.
-	-	-	-
-	-	-	-
-	-	-	-
-	-	-	-
-	-	-	-
-	-	-	-

THE INFORMATION, INCLUDING ESTIMATED QUANTITIES OF WORK, SHOWN ON THESE SHEETS IS BASED ON LIMITED INVESTIGATIONS BY THE STATE AND IS IN NO WAY WARRANTED TO INDICATE THE CONDITIONS OF ACTUAL QUANTITIES OF WORK WHICH WILL BE REQUIRED.

Plotted Date: 1/28/2013

DESIGNER/DRAFTER: RPL/SAB
CHECKED BY: RPL
SCALE AS NOTED

STATE OF CONNECTICUT
DEPARTMENT OF TRANSPORTATION

Filename: ...\FD_MST_STR_0118_0163_S005.dgn

SIGNATURE/BLOCK: OFFICE OF ENGINEERING
APPROVED BY: DATE:

PROJECT TITLE: ROCKY HILL - GLASTONBURY FERRY OFFICE BUILDING

TOWN: ROCKY HILL

DRAWING TITLE: BEAM ELEVATIONS, SECTIONS AND DETAILS

PROJECT NO. 118-0163
DRAWING NO. S-005
SHEET NO. 06.06

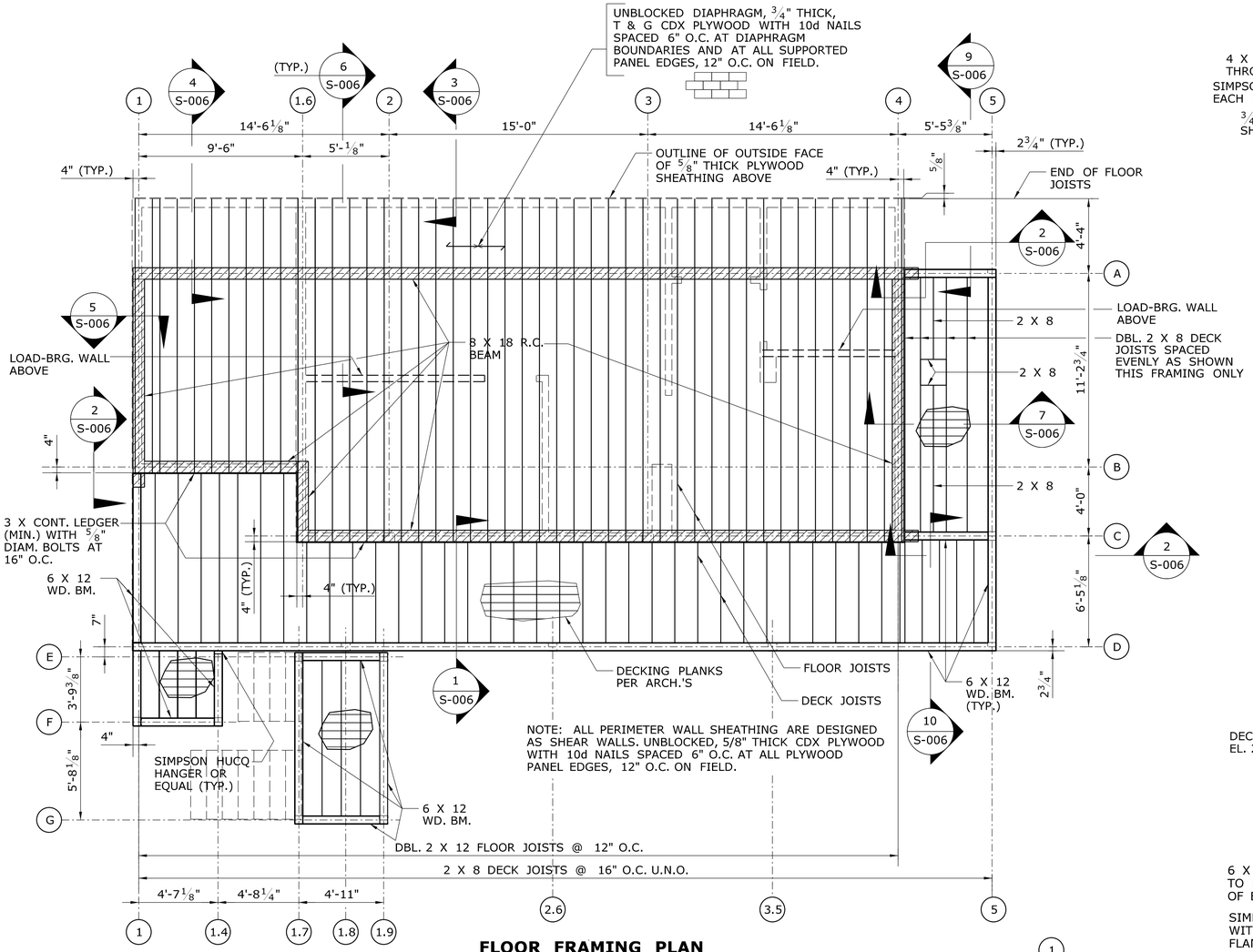

FLOOR FRAMING PLAN
SCALE 1/4"=1'-0"

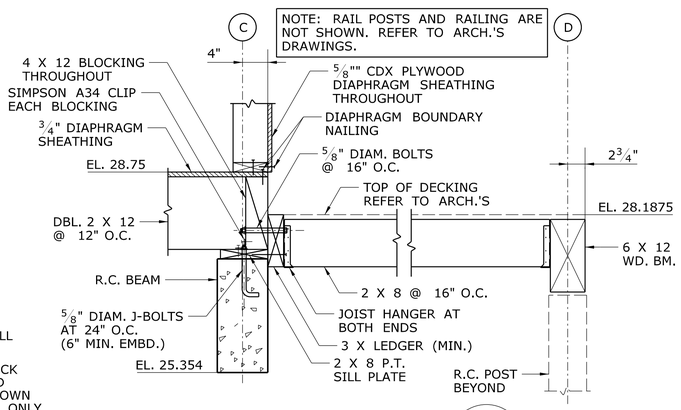

FRAMING SECTION 1
SCALE 1"=1'-0" S-006

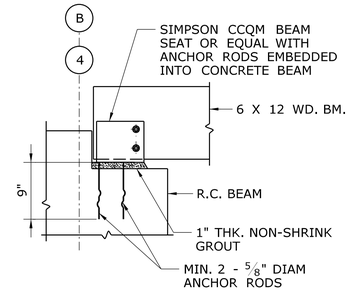

BEAM SEAT DETAIL 2
SCALE 1"=1'-0" S-006

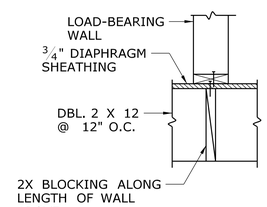

FRAMING SECTION 6
SCALE 1"=1'-0" S-006

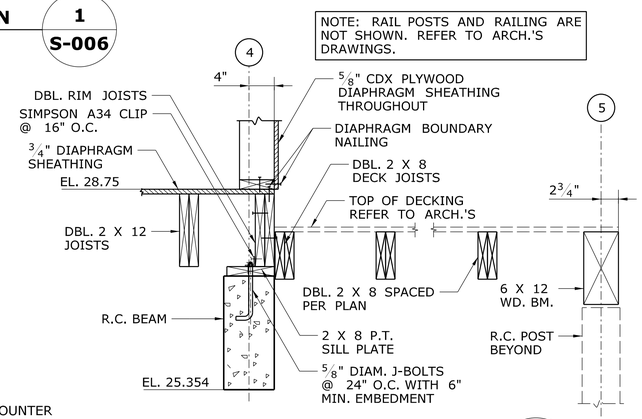

FRAMING SECTION 7
SCALE 1"=1'-0" S-006

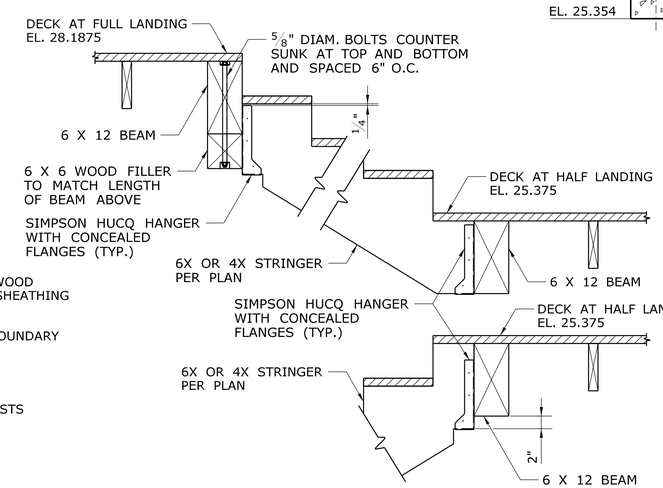

STRINGER HANGERS 8
SCALE 1"=1'-0" S-006

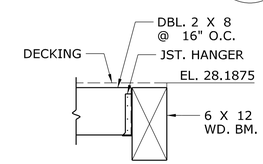

FRAMING SECTION 9
SCALE 1"=1'-0" S-006

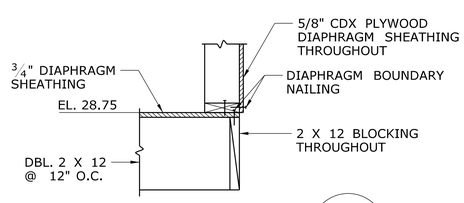

FRAMING SECTION 3
SCALE 1"=1'-0" S-006

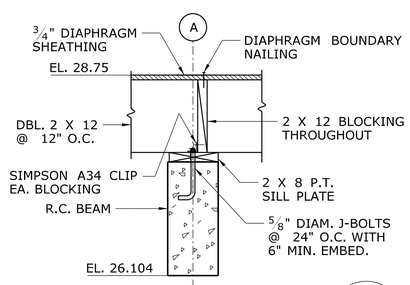

FRAMING SECTION 4
SCALE 1"=1'-0" S-006

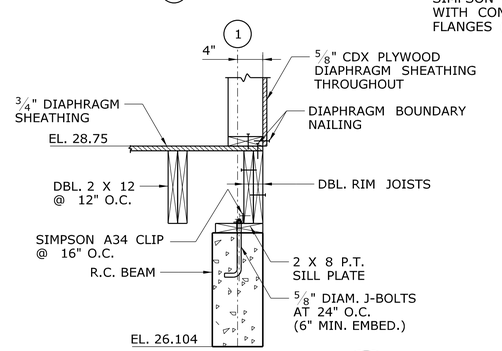

FRAMING SECTION 5
SCALE 1"=1'-0" S-006

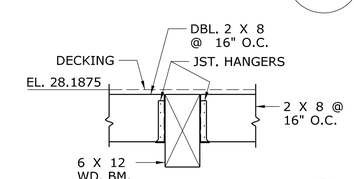

FRAMING SECTION 10
SCALE 1"=1'-0" S-006

REV.	DATE	REVISION DESCRIPTION	SHEET NO.
-	-	-	-
-	-	-	-
-	-	-	-
-	-	-	-
-	-	-	-
-	-	-	-

THE INFORMATION, INCLUDING ESTIMATED QUANTITIES OF WORK, SHOWN ON THESE SHEETS IS BASED ON LIMITED INVESTIGATIONS BY THE STATE AND IS IN NO WAY WARRANTED TO INDICATE THE CONDITIONS OF ACTUAL QUANTITIES OF WORK WHICH WILL BE REQUIRED.

Plotted Date: 1/17/2013

DESIGNER/DRAFTER: RPL/SAB
CHECKED BY: RPL
SCALE AS NOTED

STATE OF CONNECTICUT
DEPARTMENT OF TRANSPORTATION

Filename: ...\FD_MST_STR_0118_0163_S006.dgn

SIGNATURE/BLOCK: OFFICE OF ENGINEERING
APPROVED BY: DATE:

PROJECT TITLE: ROCKY HILL - GLASTONBURY FERRY OFFICE BUILDING

TOWN: ROCKY HILL

DRAWING TITLE: FLOOR FRAMING PLAN, SECTIONS AND DETAILS

PROJECT NO. 118-0163
DRAWING NO. S-006
SHEET NO. 06.07

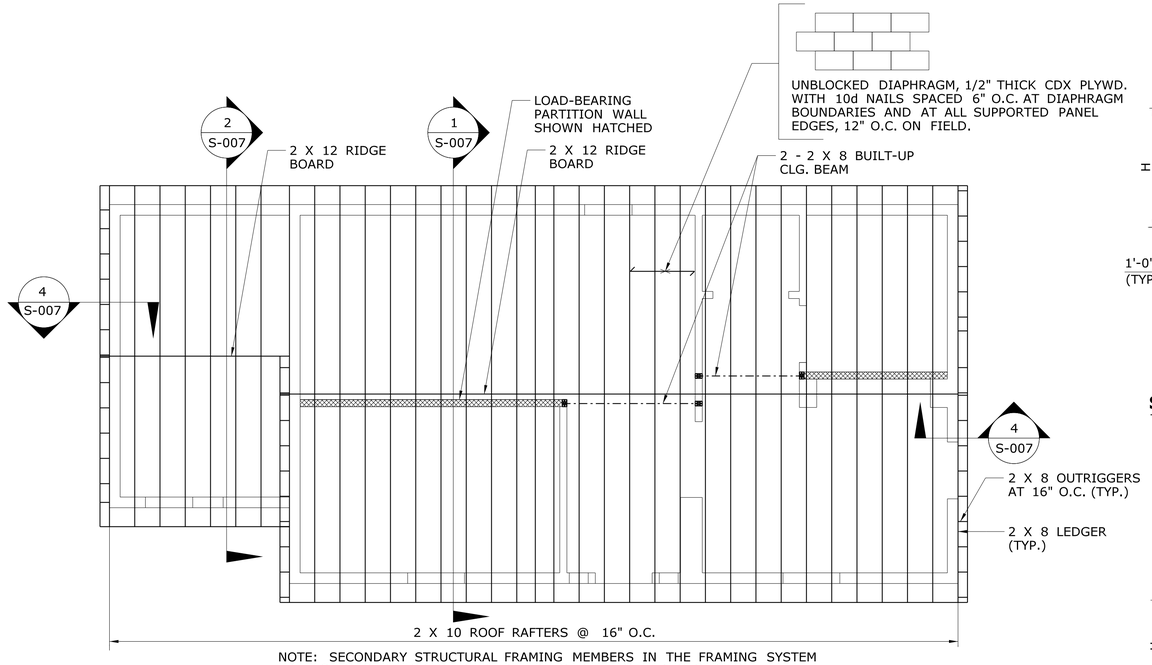

NOTE: SECONDARY STRUCTURAL FRAMING MEMBERS IN THE FRAMING SYSTEM ARE NOT SHOWN FOR CLARITY. REFER TO DETAILS AND SECTIONS.

ROOF FRAMING PLAN
SCALE 1/4"=1'-0"

FRAMING NOTES:

1. REFER TO THE FASTENING SCHEDULE IN IBC 2003 TABLE 2304.9.1 FOR MEMBER ATTACHMENTS U.N.O.
2. USE MINIMUM OF 2 - 2 X 6 BUILT-UP BEAM FOR ALL INTERIOR AND EXTERIOR HEADERS.
3. USE 2 - 2 X 8 BUILT-UP CEILING BEAM WITH TWO ROWS OF 10d NAILS AT 6" O.C. (TYP.)

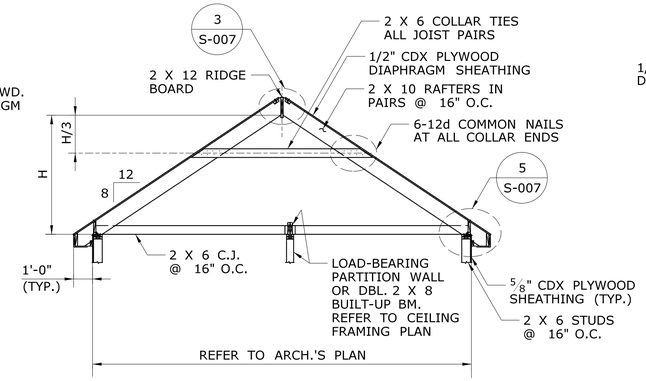

STRUCTURAL ROOF FRAMING (TYP.) 1 S-007
SCALE 1/4"=1'-0"

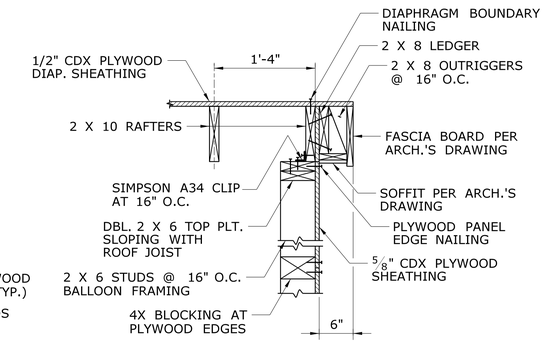

SHEAR TRANSFER DETAIL (TYP.) 4 S-007
SCALE 1"=1'-0"

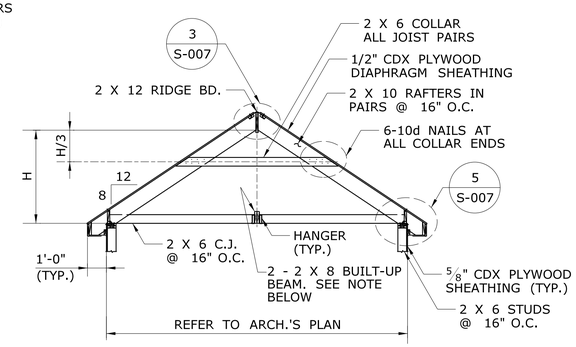

NOTE: NAIL PIECES TOGETHER WITH TWO LINES OF 10d NAILS AT 6" O.C. (TYP.)

STRUCTURAL ROOF FRAMING (TYP.) 2 S-007
SCALE 1/4"=1'-0"

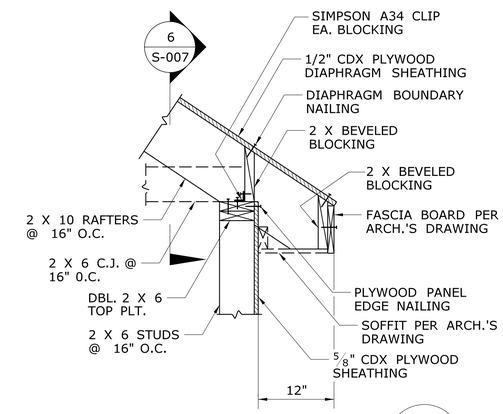

SHEAR TRANSFER DETAIL (TYP.) 5 S-007
SCALE 1"=1'-0"

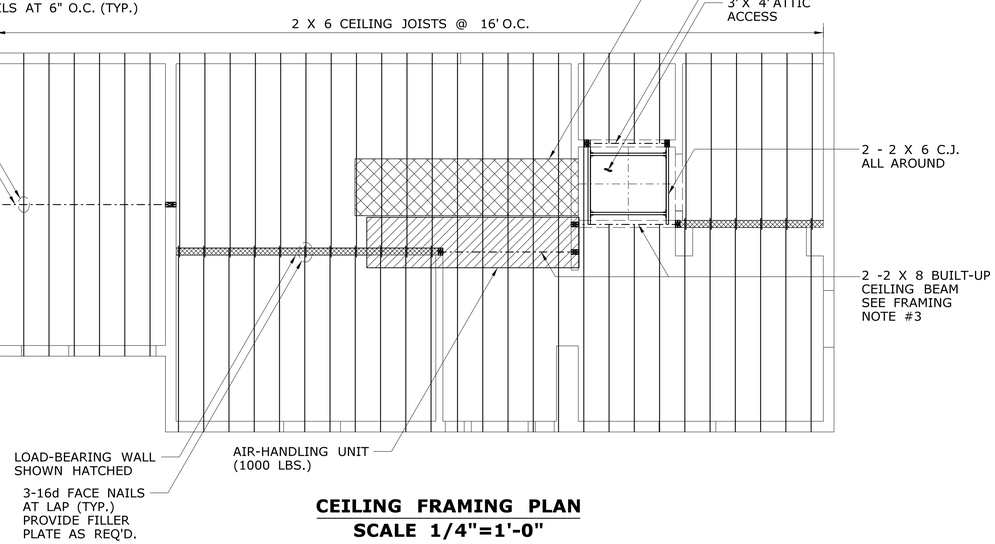

CEILING FRAMING PLAN
SCALE 1/4"=1'-0"

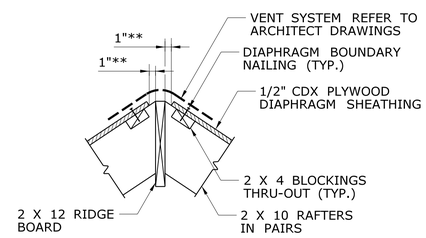

**NOTE: THIS DIMENSION SHALL BE COORDINATED WITH THE REQUIREMENT FOR ROOF VENT PER ARCHITECTURAL DRAWINGS.

RIDGE DETAIL (TYP.) 3 S-007
SCALE 1"=1'-0"

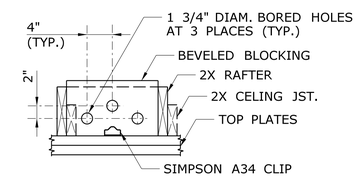

BLOCKING DETAIL (TYP.) 6 S-007
SCALE 1"=1'-0"

REV.	DATE	REVISION DESCRIPTION	SHEET NO.
-	-	-	-
-	-	-	-
-	-	-	-
-	-	-	-
-	-	-	-
-	-	-	-

THE INFORMATION, INCLUDING ESTIMATED QUANTITIES OF WORK, SHOWN ON THESE SHEETS IS BASED ON LIMITED INVESTIGATIONS BY THE STATE AND IS IN NO WAY WARRANTED TO INDICATE THE CONDITIONS OF ACTUAL QUANTITIES OF WORK WHICH WILL BE REQUIRED.

Plotted Date: 1/28/2013

DESIGNER/DRAFTER: RPL/SAB
CHECKED BY: RPL
SCALE AS NOTED

STATE OF CONNECTICUT
DEPARTMENT OF TRANSPORTATION

Filename: ...\FD_MST_STR_0118_0163_S007.dgn

SIGNATURE/BLOCK:
OFFICE OF ENGINEERING
APPROVED BY: DATE:

PROJECT TITLE:
ROCKY HILL - GLASTONBURY FERRY OFFICE BUILDING

TOWN: ROCKY HILL

DRAWING TITLE:
ROOF FRAMING PLAN, SECTIONS AND DETAILS

PROJECT NO. 118-0163
DRAWING NO. S-007
SHEET NO. 06.08