03 - STRUCTURES
INDEX OF DRAWINGS

DRAWING NUMBER	DRAWING TITLE	DRAWING NUMBER	DRAWING TITLE
S-01	SUBSET COVER SHEET - INDEX OF DRAWINGS	S-21	GENERAL PLAN - BRIDGE NO. 00374
S-02	ASPHALTIC EXPANSION JOINT DETAILS	S-22	JOINT DETAILS - 1 - BRIDGE NO. 00374
S-03	SILICONE EXPANSION JOINT DETAILS	S-23	JOINT DETAILS - 2 - BRIDGE NO. 00374
S-04	GENERAL PLAN - BRIDGE NO. 04276	S-24	GENERAL PLAN - BRIDGE NO. 01456
S-05	JOINT DETAILS - 1 - BRIDGE NO. 04276	S-25	JOINT DETAILS - BRIDGE NO. 01456
S-06	JOINT DETAILS - 2 - BRIDGE NO. 04276	S-26	GENERAL PLAN - 1 - BRIDGE NO. 01469B
S-07	GENERAL PLAN - BRIDGE NO. 04275	S-27	GENERAL PLAN - 2 - BRIDGE NO. 01469B
S-08	JOINT DETAILS - BRIDGE NO. 04275	S-28	JOINT DETAILS - BRIDGE NO. 01469B
S-09	GENERAL PLAN - BRIDGE NO. 05230	S-29	GENERAL PLAN - BRIDGE NO. 01242
S-10	JOINT DETAILS - 1 - BRIDGE NO. 05230	S-30	JOINT DETAILS - BRIDGE NO. 01242
S-11	JOINT DETAILS - 2 - BRIDGE NO. 05230	S-31	GENERAL PLAN - BRIDGE NO. 00443
S-12	GENERAL PLAN - BRIDGE NO. 05228	S-32	JOINT DETAILS - 1 - BRIDGE NO. 00443
S-13	JOINT DETAILS - BRIDGE NO. 05228	S-33	JOINT DETAILS - 2 - BRIDGE NO. 00443
S-14	GENERAL PLAN - BRIDGE NO. 05444		
S-15	JOINT DETAILS - BRIDGE NO. 05444		
S-16	GENERAL PLAN - BRIDGE NO. 00818		
S-17	JOINT DETAILS - 1 - BRIDGE NO. 00818		
S-18	JOINT DETAILS - 2 - BRIDGE NO. 00818		
S-19	GENERAL PLAN - BRIDGE NO. 05443		
S-20	JOINT DETAILS - BRIDGE NO. 05443		

DESIGNED BY:
CLOSE, JENSEN AND MILLER, PC

John Miller, P.E.
2013.07.09
11:40:51-04'00'

REV.	DATE	REVISION DESCRIPTION	SHEET NO.
-	-	-	-
-	-	-	-
-	-	-	-
-	-	-	-
-	-	-	-
-	-	-	-

THE INFORMATION, INCLUDING ESTIMATED QUANTITIES OF WORK, SHOWN ON THESE SHEETS IS BASED ON LIMITED INVESTIGATIONS BY THE STATE AND IS IN NO WAY WARRANTED TO INDICATE THE CONDITIONS OF ACTUAL QUANTITIES OF WORK WHICH WILL BE REQUIRED.

Plotted Date: 7/2/2013

DESIGNER/DRAFTER: **B.A./M.G.**
CHECKED BY: **J.H.M. II**

STATE OF CONNECTICUT
DEPARTMENT OF TRANSPORTATION

Filename: ...\SB_MSH_0_171_367_S_01_INDEX_SHEET.dgn

SIGNATURE/ BLOCK:
Close, Jensen and Miller, P.C.
1137 Silas Deane Highway
Wethersfield, CT 06109

PROJECT TITLE:
REPLACEMENT OF EXPANSION JOINTS IN DISTRICT 1

TOWN: **VARIOUS**

DRAWING TITLE: **SUBSET COVER SHEET INDEX OF DRAWINGS**

PROJECT NO. **171-367**
DRAWING NO. **S-01**
SHEET NO. **03.01**

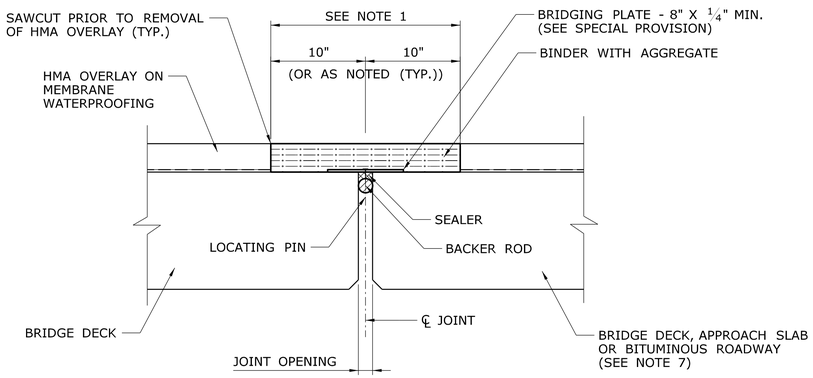

SECTION

SCALE: 1 1/2" = 1'-0"

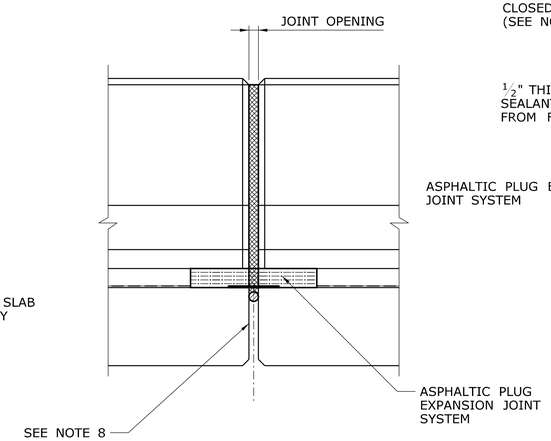

ELEVATION

SCALE: 1" = 1'-0"

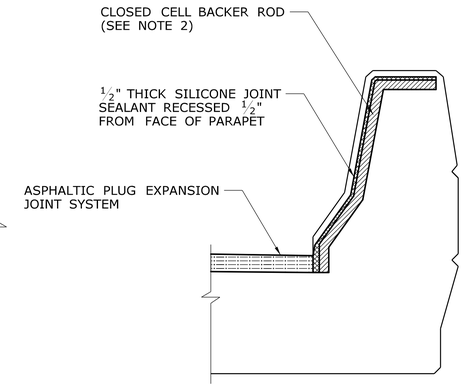

SECTION AT PARAPET

SCALE: 1" = 1'-0"

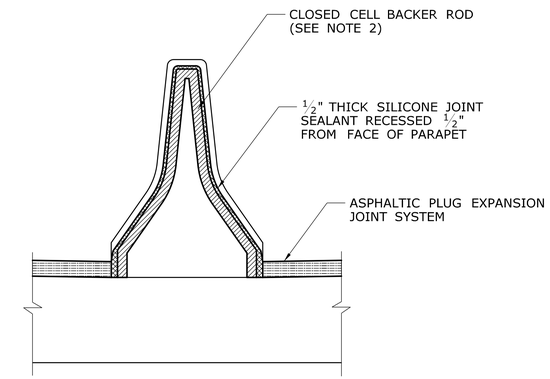

SECTION AT MEDIAN

SCALE: 1" = 1'-0"

NOTES:

1. REMOVE NEW HMA OVERLAY AND MEMBRANE WATERPROOFING. REPLACE WITH ASPHALTIC PLUG EXPANSION JOINT SYSTEM. TO BE PAID FOR UNDER THE ITEM "ASPHALTIC PLUG EXPANSION JOINT SYSTEM".
2. THE CLOSED CELL BACKER ROD SHALL BE PLACED A MINIMUM OF 2" FROM THE OUTSIDE FACE OF PARAPET AND MEDIAN BARRIER.
3. THE CLOSED CELL BACKER ROD DIAMETER SHALL BE DETERMINED AFTER MEASURING THE JOINT OPENING. THE ROD SHALL BE SIZED FOR THAT OPENING AS RECOMMENDED BY THE JOINT SUPPLIER.
4. PRIOR TO INSTALLING THE SILICONE SEALANT, CLEAN JOINT SIDES BY SANDBLASTING. DUST SHALL BE REMOVED BY THE METHOD APPROVED BY THE ENGINEER. THIS WORK SHALL BE PAID FOR UNDER THE ITEM "ASPHALTIC PLUG EXPANSION JOINT SYSTEM".
5. AT THE GUTTERS, THE SILICONE SEALANT SHALL BE FLUSH WITH THE OUTSIDE FACE OF CONCRETE.
6. SILICONE SEALANT AND BACKER ROD THROUGH THE PARAPET, SIDEWALK AND MEDIAN BARRIER IS INCLUDED IN THE ITEM "ASPHALTIC PLUG EXPANSION JOINT SYSTEM".
7. WHERE THE BRIDGE DECK ABUTS A BITUMINOUS ROADWAY, OR SHOULDER, BRIDGING PLATES SHALL NOT BE INSTALLED (SEE SPECIAL PROVISION).
8. AT SITE NO. 9 (BRIDGE NO. 00374) SEAL THE JOINT BETWEEN THE PARAPET AND CURB OR WINGWALL AS SHOWN ON THE PLANS IN ACCORDANCE WITH SILICONE JOINT SEALANT RECESSED FROM FACE OF PARAPET DETAIL. THIS WORK SHALL BE INCLUDED IN THE GENERAL COST OF CONSTRUCTION.

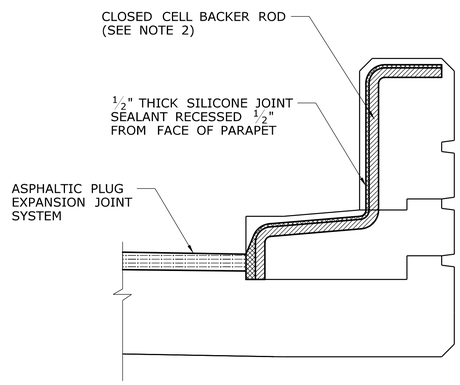

SECTION AT SAFETYWALK

SCALE: 1" = 1'-0"

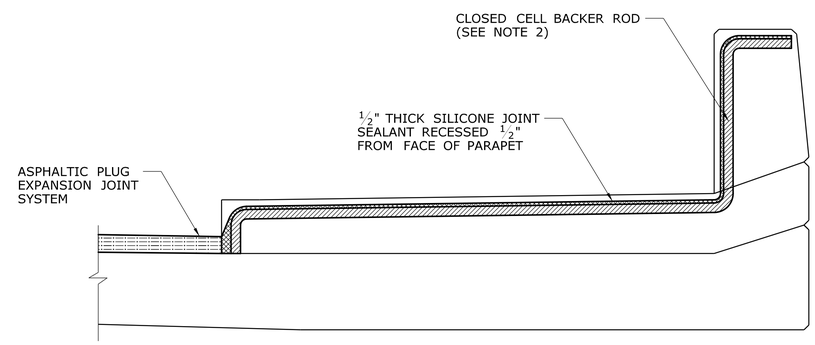

SECTION AT SIDEWALK

SCALE: 1" = 1'-0"

ASPHALTIC PLUG EXPANSION JOINT SYSTEM

REV.	DATE	REVISION DESCRIPTION	SHEET NO.
-	-	-	-
-	-	-	-
-	-	-	-
-	-	-	-
-	-	-	-
-	-	-	-

THE INFORMATION, INCLUDING ESTIMATED QUANTITIES OF WORK, SHOWN ON THESE SHEETS IS BASED ON LIMITED INVESTIGATIONS BY THE STATE AND IS IN NO WAY WARRANTED TO INDICATE THE CONDITIONS OF ACTUAL QUANTITIES OF WORK WHICH WILL BE REQUIRED.

Plotted Date: 7/9/2013

DESIGNER/DRAFTER: B.A./M.G.
CHECKED BY: J.H.M. II
SCALE AS NOTED

STATE OF CONNECTICUT
DEPARTMENT OF TRANSPORTATION

Filename: ...\SB_MSH_0_171_367_S_02_JOINT_DETAILS.dgn

SIGNATURE/BLOCK:
Close, Jensen and Miller, P.C.
1137 Silas Deane Highway
Wethersfield, CT 06109

PROJECT TITLE: REPLACEMENT OF EXPANSION JOINTS IN DISTRICT 1

TOWN: VARIOUS

DRAWING TITLE: ASPHALTIC EXPANSION JOINT DETAILS

PROJECT NO. 171-367
DRAWING NO. S-02
SHEET NO. 03.02

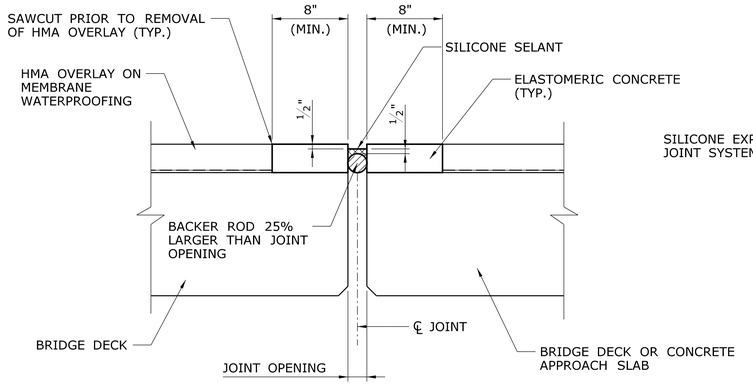

SECTION

SCALE: 1½" = 1'-0"

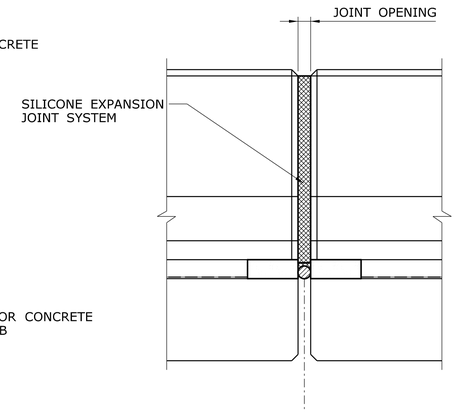

ELEVATION

SCALE: 1" = 1'-0"

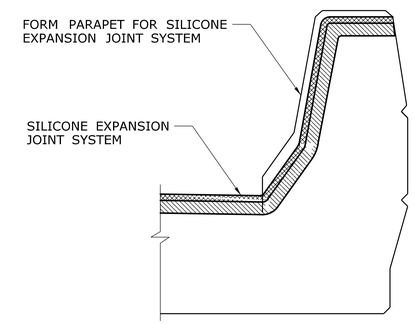

SECTION AT PARAPET

SCALE: 1" = 1'-0"

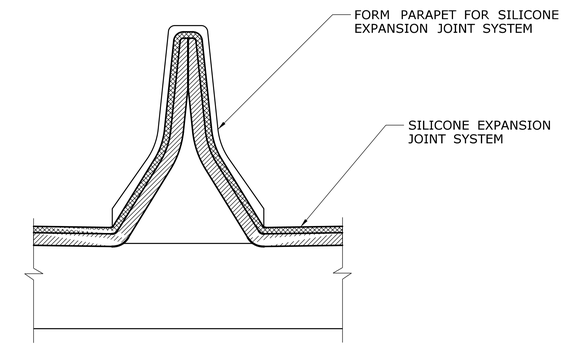

SECTION AT MEDIAN

SCALE: 1" = 1'-0"

NOTES:

1. REMOVE NEW HMA OVERLAY AND MEMBRANE WATERPROOFING. REPLACE WITH SILICONE EXPANSION JOINT SYSTEM. TO BE PAID FOR UNDER THE ITEM "SILICONE EXPANSION JOINT SYSTEM".
2. THE CLOSED CELL BACKER ROD SHALL BE PLACED A MINIMUM OF 2" FROM THE OUTSIDE FACE OF PARAPET AND MEDIAN BARRIER.
3. THE CLOSED CELL BACKER ROD DIAMETER SHALL BE DETERMINED AFTER MEASURING THE JOINT OPENING. THE ROD SHALL BE SIZED FOR THAT OPENING AS RECOMMENDED BY THE JOINT SUPPLIER.
4. PRIOR TO INSTALLING THE SILICONE SEALANT, CLEAN JOINT SIDES BY SANDBLASTING. DUST SHALL BE REMOVED BY THE METHOD APPROVED BY THE ENGINEER. THIS WORK SHALL BE PAID FOR UNDER THE ITEM "SILICONE EXPANSION JOINT SYSTEM".
5. THE NON-SAGGING SILICONE SEALANT SHALL BE PLACED ON THE BACKER ROD 1/2 " THICK. AT THE GUTTERS, THE SILICONE SEALANT SHALL BE FLUSH WITH THE OUTSIDE FACE OF CONCRETE.
6. AT THE GUTTERS, THE SILICONE SEALANT SHALL BE FLUSH WITH THE OUTSIDE FACE OF CONCRETE.
7. SILICONE SEALANT AND BACKER ROD THROUGH THE PARAPET, SIDEWALK AND MEDIAN BARRIER IS INCLUDED IN THE ITEM "SILICONE EXPANSION JOINT SYSTEM".

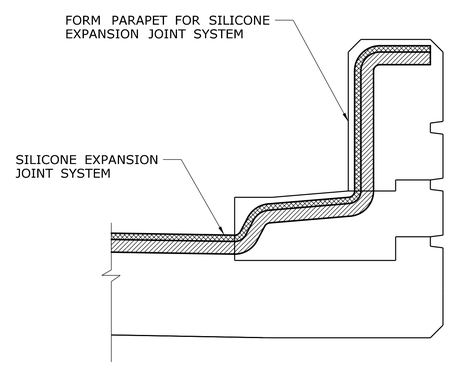

SECTION AT SAFETYWALK

SCALE: 1" = 1'-0"

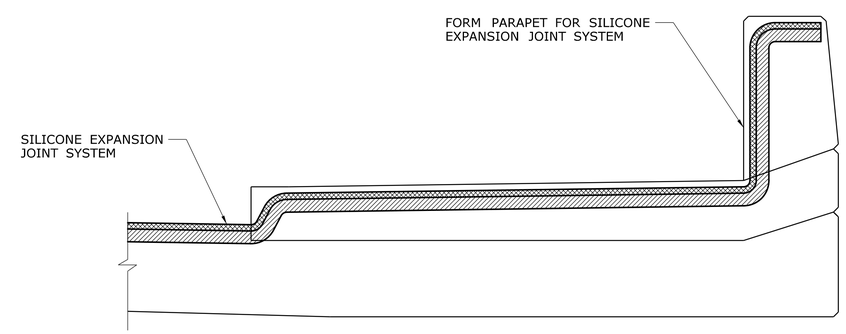

SECTION AT SIDEWALK

SCALE: 1" = 1'-0"

SILICONE EXPANSION JOINT SYSTEM

REV.	DATE	REVISION DESCRIPTION	SHEET NO.
-	-	-	-
-	-	-	-
-	-	-	-
-	-	-	-
-	-	-	-
-	-	-	-

THE INFORMATION, INCLUDING ESTIMATED QUANTITIES OF WORK, SHOWN ON THESE SHEETS IS BASED ON LIMITED INVESTIGATIONS BY THE STATE AND IS IN NO WAY WARRANTED TO INDICATE THE CONDITIONS OF ACTUAL QUANTITIES OF WORK WHICH WILL BE REQUIRED.

Plotted Date: 7/2/2013

DESIGNER/DRAFTER: B.A./M.G.
CHECKED BY: J.H.M. II
SCALE AS NOTED

STATE OF CONNECTICUT
DEPARTMENT OF TRANSPORTATION

Filename: ...\SB_MSH_0_171_367_S_03_JOINT_DETAILS.dgn

SIGNATURE/ BLOCK:
Close, Jensen and Miller, P.C.
1137 Silas Deane Highway
Wethersfield, CT 06109

PROJECT TITLE: REPLACEMENT OF EXPANSION JOINTS IN DISTRICT 1

TOWN: VARIOUS

DRAWING TITLE: SILICONE EXPANSION JOINT DETAILS

PROJECT NO. 171-367
DRAWING NO. S-03
SHEET NO. 03.03

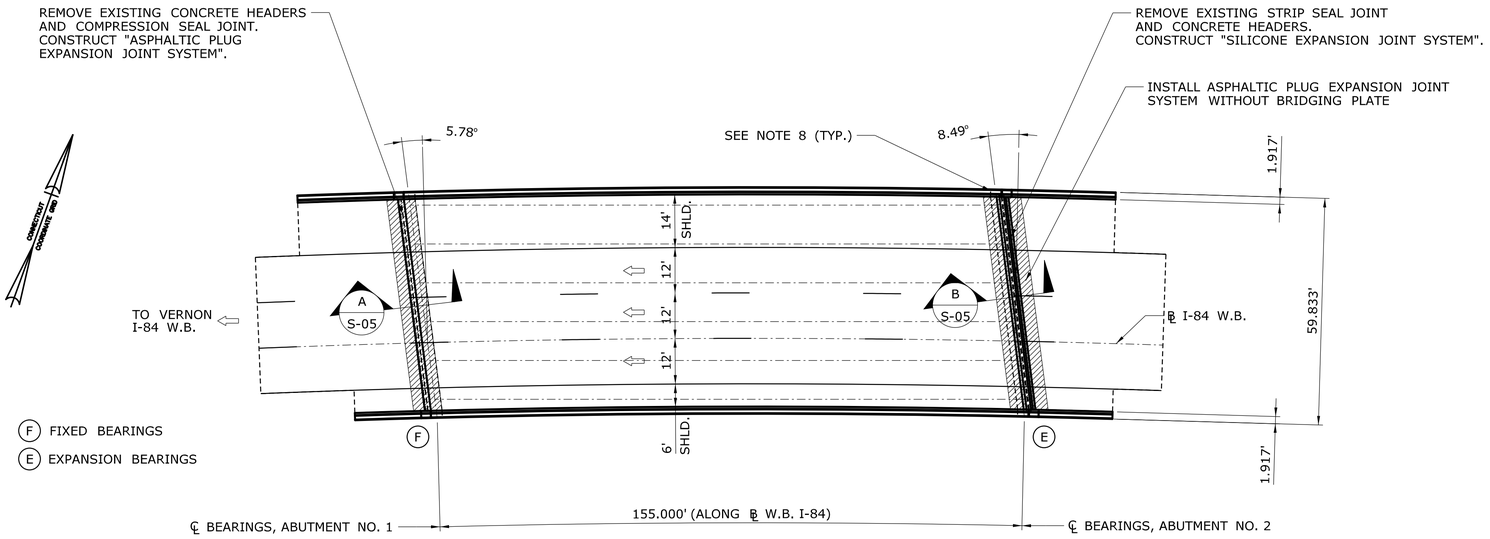

PLAN BRIDGE NO. 04276, SITE NO. 1
I-84 W.B. OVER ROUTE 31

SCALE: 1" = 20'

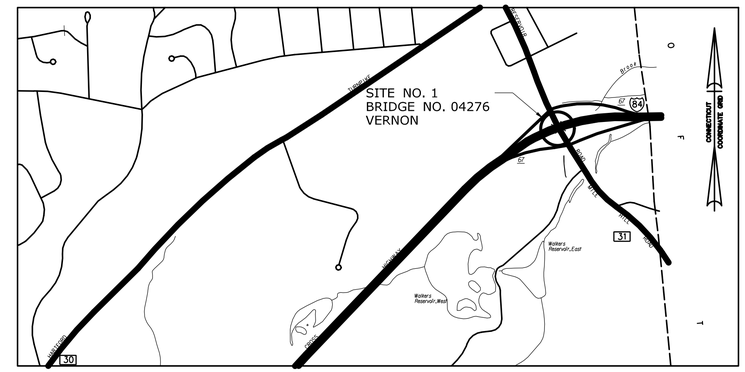

LOCATION PLAN - SITE NO. 1

SCALE: 1" = 1000'

SILICONE EXPANSION JOINT OPENING TABLE	
INSTALL TEMP. DEG. F°	PERPENDICULAR JOINT OPENING (IN.)
40°	2.37
50°	2.25
60°	2.13
70°	2.00
80°	1.88
90°	1.76

AT ABUTMENT 2

NOTES:

1. ALL WORK TO SAWCUT BITUMINOUS PAVEMENT, REMOVE AND DISPOSE OF BITUMINOUS CONCRETE, MEMBRANE WATERPROOFING, EXISTING JOINT COMPONENTS AND SEALING ELEMENTS, EXCLUDING THE REMOVAL OF PORTLAND CEMENT CONCRETE HEADERS SHALL BE INCLUDED IN THE COST OF THE APPROPRIATE JOINT SYSTEM (SEE SPECIAL PROVISIONS).
2. ALL WORK INVOLVING REMOVAL AND RECONSTRUCTION OF CONCRETE, INCLUDING CONCRETE HEADERS, DECK SLABS, APPROACH SLABS, HAUNCHES, SIDEWALKS, AND PARAPETS, AS SHOWN ON THE PLANS, SHALL BE PAID UNDER THE ITEM "CONSTRUCT CONCRETE HEADERS".
3. THE CONCRETE SHALL BE CHIPPED OUT TO A SOUND SURFACE WITHIN THE LIMITS AS DESCRIBED ON THE PLANS. EXTREME CARE SHALL BE TAKEN WHERE REINFORCING STEEL IS UNCOVERED NOT TO DAMAGE THE STEEL OR ITS BOND IN THE SURROUNDING CONCRETE.
4. ALL EXPOSED REINFORCING STEEL SHALL BE THOROUGHLY CLEANED AND REUSED. THE EXISTING REINFORCING SHALL BE REPLACED WHEN:
   - EXISTING REBAR HAS LOST 25% OR MORE OF THE ORIGINAL CROSS SECTIONAL AREA.
   - EXISTING REBAR IS BROKEN.
   - AS ORDERED BY THE ENGINEER.
5. THE REMOVED AREAS SHALL BE FILLED AND FINISHED WITH FAST SETTING CONCRETE AND MATCH EXISTING GRADES.
6. WHERE EXISTING BRIDGE DECK JOINTS ARE CONCEALED BENEATH BITUMINOUS CONCRETE OVERLAY THE CONTRACTOR SHALL VERIFY THE BRIDGE DECK JOINT LOCATION AND HAVE THE LIMITS OF SAW-CUTTING APPROVED BY THE ENGINEER.
7. MEMBRANE WATERPROOFING SHALL BE "MEMBRANE WATERPROOFING (SHEET)(TORCH APPLIED)" AND SHALL BE PLACED PRIOR TO PLACEMENT OF HMA S0.25. THE CONTRACTOR MAY MASK OFF THE LIMITS OF THE PROPOSED HEADERS WHEN CONSTRUCTION THE HEADERS AS APPROVED BY THE ENGINEER.
8. FOR PARAPET AT ABUTMENT NO. 2 JOINT TREATMENT DETAILS, SEE DRAWING NOS. S-06.
9. FOR PARAPET JOINT TREATMENT DETAILS, SEE DRAWING NOS. S-02 AND S-03.
10. PAVEMENT MARKINGS SUCH AS 4" WHITE, 4" YELLOW, 6" WHITE, 8" WHITE, AND SYMBOLS AND LEGENDS THAT MAY BE REMOVED AS A RESULT OF CONSTRUCTION SHALL BE REPLACED WITH SIMILAR EPOXY RESIN PAVEMENT MARKINGS. THE COST OF THIS WORK SHALL BE INCLUDED IN THE GENERAL COST OF CONSTRUCTION.

ASPHALTIC PLUG DESIGN THERMAL MOVEMENT

THE DESIGN THERMAL MOVEMENT AT ABUTMENT NO. 1 IS 0".

REV.	DATE	REVISION DESCRIPTION	SHEET NO.
-	-	-	-
-	-	-	-
-	-	-	-
-	-	-	-
-	-	-	-
-	-	-	-

THE INFORMATION, INCLUDING ESTIMATED QUANTITIES OF WORK, SHOWN ON THESE SHEETS IS BASED ON LIMITED INVESTIGATIONS BY THE STATE AND IS IN NO WAY WARRANTED TO INDICATE THE CONDITIONS OF ACTUAL QUANTITIES OF WORK WHICH WILL BE REQUIRED.

Plotted Date: 7/2/2013

DESIGNER/DRAFTER: B.A./M.G.
CHECKED BY: J.H.M. II
SCALE AS NOTED

STATE OF CONNECTICUT
DEPARTMENT OF TRANSPORTATION

Filename: ...\SB_MSH_1_Br04276_171_367_S_04_GPN.dgn

SIGNATURE/BLOCK:
Close, Jensen and Miller, P.C.
1137 Silas Deane Highway
Wethersfield, CT 06109

PROJECT TITLE: REPLACEMENT OF EXPANSION JOINTS IN DISTRICT 1

TOWN: VERNON

DRAWING TITLE: GENERAL PLAN BRIDGE NO. 04276

PROJECT NO. 171-367
DRAWING NO. S-04
SHEET NO. 03.04

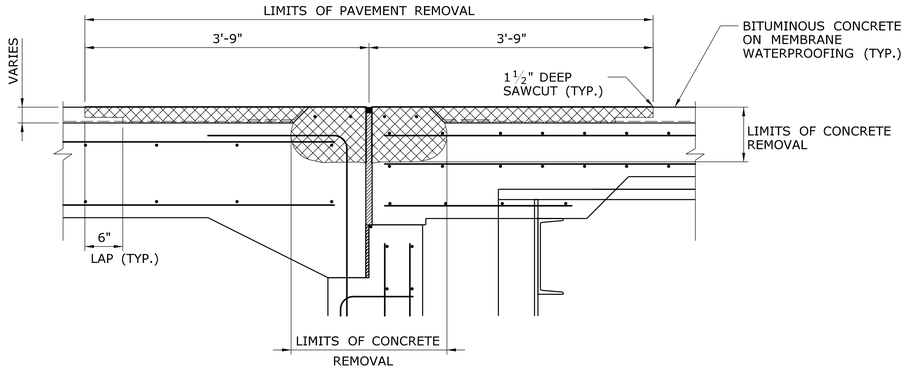

EXISTING CONDITION - LIMITS OF REMOVAL

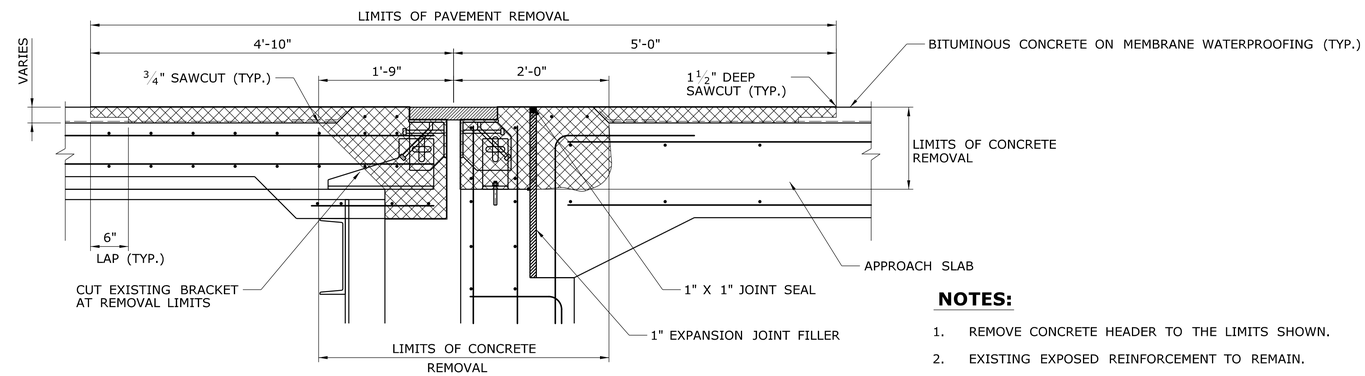

EXISTING CONDITION - LIMITS OF REMOVAL

NOTES:

1. REMOVE CONCRETE HEADER TO THE LIMITS SHOWN.
2. EXISTING EXPOSED REINFORCEMENT TO REMAIN.
3. SAWCUTTING, CONCRETE REMOVAL AND RECONSTRUCTION WORK SHALL BE PAID FOR UNDER THE ITEM "CONSTRUCT CONCRETE HEADERS", SEE SPECIAL PROVISION.

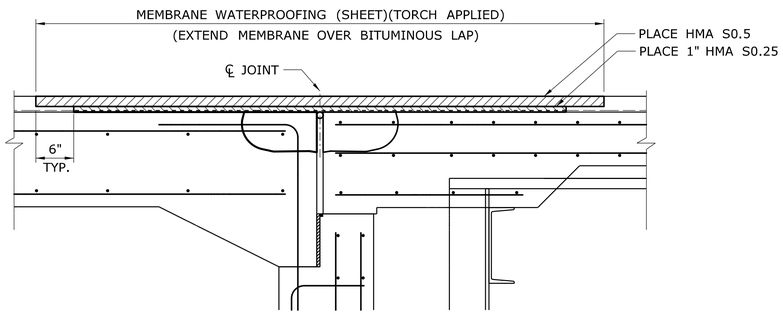

INTERMEDIATE CONDITION

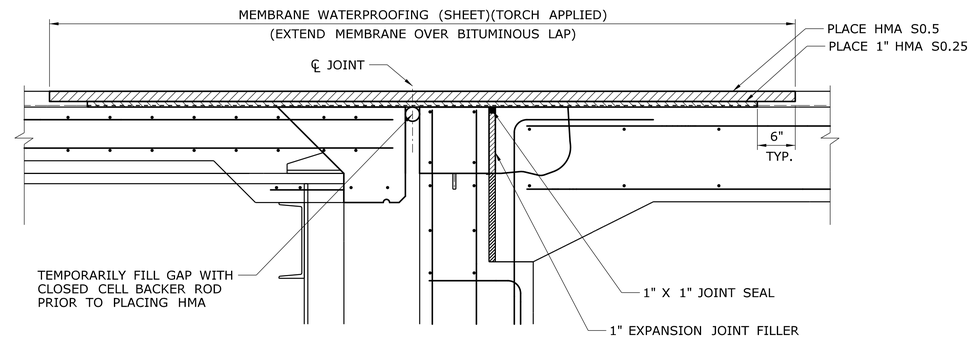

INTERMEDIATE CONDITION

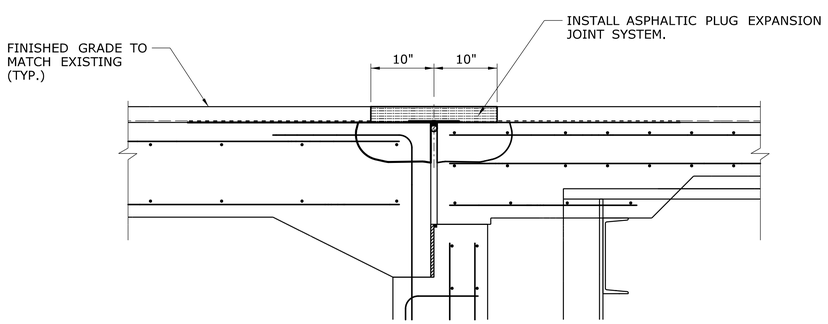

FINAL CONDITION

JOINT REPLACEMENT AT ABUTMENT NO. 1

SECTION A / S-04

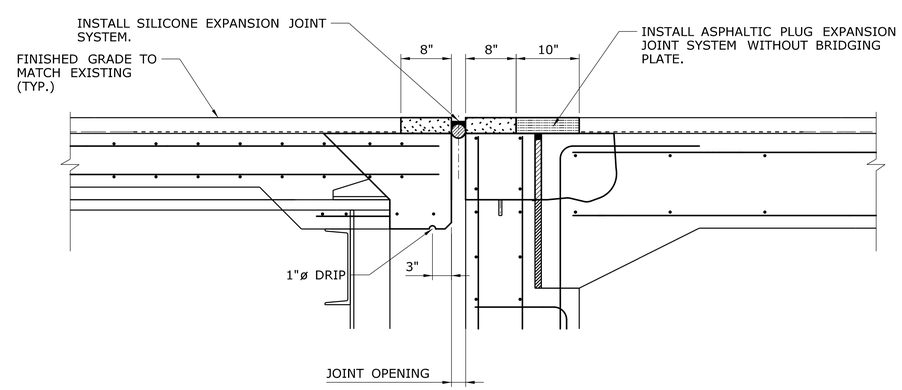

FINAL CONDITION

JOINT REPLACEMENT AT ABUTMENT NO. 2

SECTION B / S-04

REV.	DATE	REVISION DESCRIPTION	SHEET NO.
-	-	-	-
-	-	-	-
-	-	-	-
-	-	-	-
-	-	-	-
-	-	-	-

THE INFORMATION, INCLUDING ESTIMATED QUANTITIES OF WORK, SHOWN ON THESE SHEETS IS BASED ON LIMITED INVESTIGATIONS BY THE STATE AND IS IN NO WAY WARRANTED TO INDICATE THE CONDITIONS OF ACTUAL QUANTITIES OF WORK WHICH WILL BE REQUIRED.

Plotted Date: 7/2/2013

DESIGNER/DRAFTER: B.A./M.G.
CHECKED BY: J.H.M. II
SCALE: 1" = 1'-0"

STATE OF CONNECTICUT
DEPARTMENT OF TRANSPORTATION

Filename: ...\SB_MSH_1_Br04276_171_367_S_05_JOINT.dgn

SIGNATURE/BLOCK:
Close, Jensen and Miller, P.C.
1137 Silas Deane Highway
Wethersfield, CT 06109

PROJECT TITLE: REPLACEMENT OF EXPANSION JOINTS IN DISTRICT 1

TOWN: VERNON

DRAWING TITLE: JOINT DETAILS - 1 BRIDGE NO. 04276

PROJECT NO. 171-367
DRAWING NO. S-05
SHEET NO. 03.05

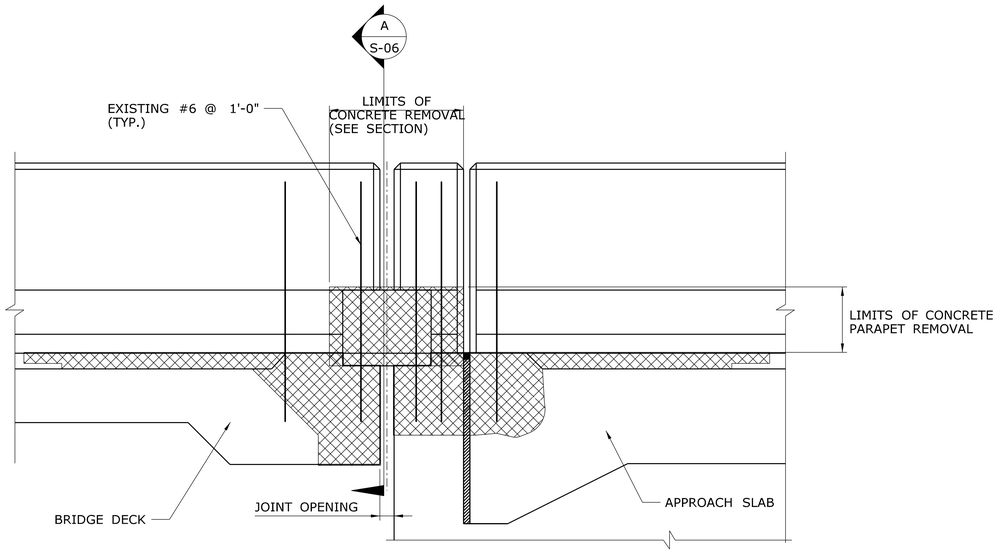

ELEVATION

EXISTING CONDITION

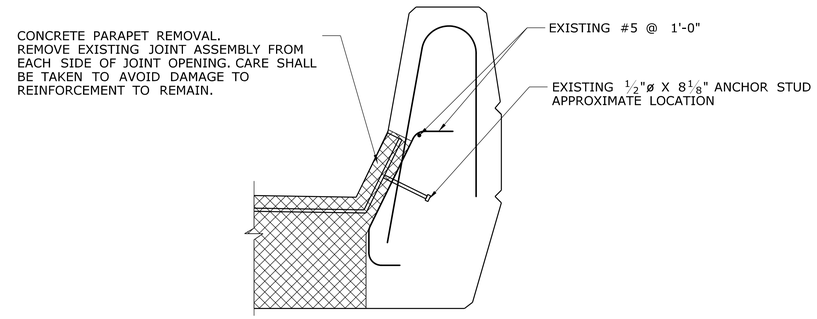

SECTION AT PARAPET

SECTION A / S-06

NOTES

1. PARAPET RECONSTRUCTION WORK SHALL BE PAID FOR UNDER THE ITEM "CONSTRUCT CONCRETE HEADERS".
2. NEW CONCRETE SHALL MATCH SHAPE AND COLOR OF EXISTING PARAPET AS CLOSELY AS POSSIBLE.
3. FOR PARAPET JOINT TREATMENT DETAILS, SEE DRAWING NO. S-03.

PARAPET JOINT REMOVAL AT ABUTMENT NO. 2

REV.	DATE	REVISION DESCRIPTION	SHEET NO.
-	-	-	-
-	-	-	-
-	-	-	-
-	-	-	-
-	-	-	-
-	-	-	-

THE INFORMATION, INCLUDING ESTIMATED QUANTITIES OF WORK, SHOWN ON THESE SHEETS IS BASED ON LIMITED INVESTIGATIONS BY THE STATE AND IS IN NO WAY WARRANTED TO INDICATE THE CONDITIONS OF ACTUAL QUANTITIES OF WORK WHICH WILL BE REQUIRED.

Plotted Date: 7/2/2013

DESIGNER/DRAFTER: **B.A./M.G.**

CHECKED BY: **J.H.M. II**

SCALE: 1" = 1'-0"

STATE OF CONNECTICUT
DEPARTMENT OF TRANSPORTATION

Filename: ...\SB_MSH_1_Br04276_171_367_S_06_JOINT.dgn

SIGNATURE/ BLOCK:

Close, Jensen and Miller, P.C.
1137 Silas Deane Highway
Wethersfield, CT 06109

PROJECT TITLE:
REPLACEMENT OF EXPANSION JOINTS IN DISTRICT 1

TOWN: **VERNON**

DRAWING TITLE:
JOINT DETAILS - 2
BRIDGE NO. 04276

PROJECT NO. **171-367**

DRAWING NO. **S-06**

SHEET NO. **03.06**

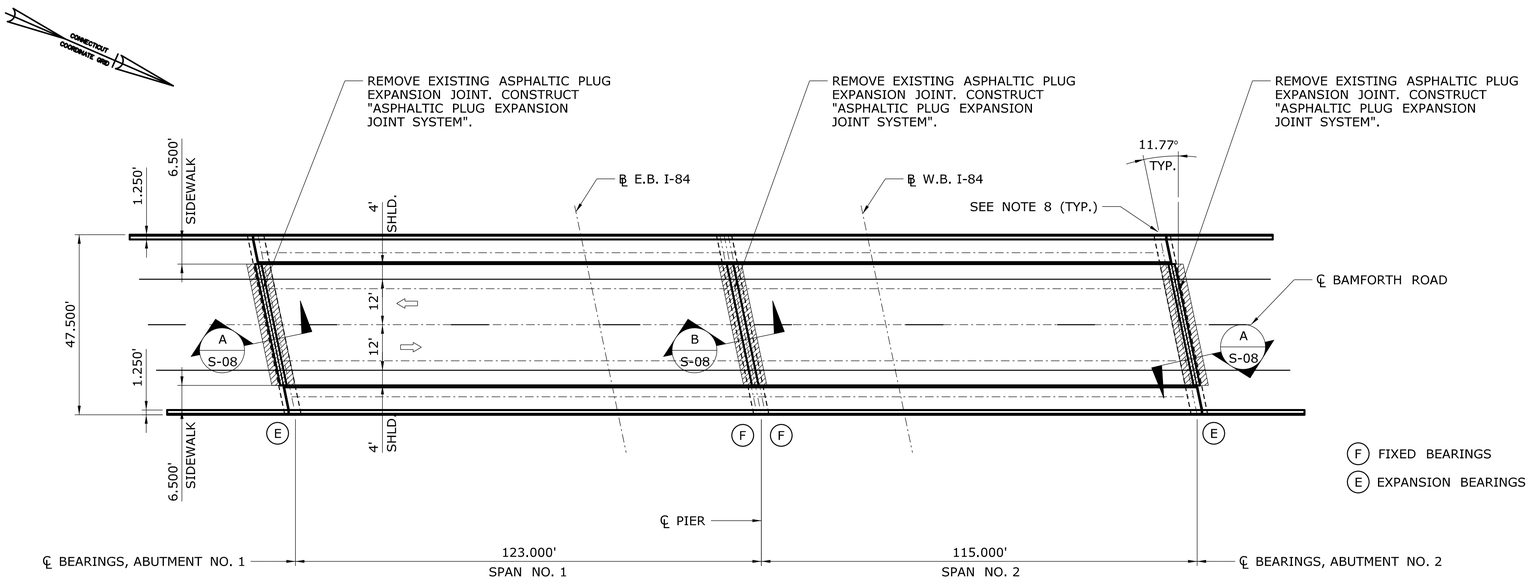

PLAN BRIDGE NO. 04275, SITE NO. 3
BAMFORTH ROAD OVER I-84

SCALE: 1" = 20'

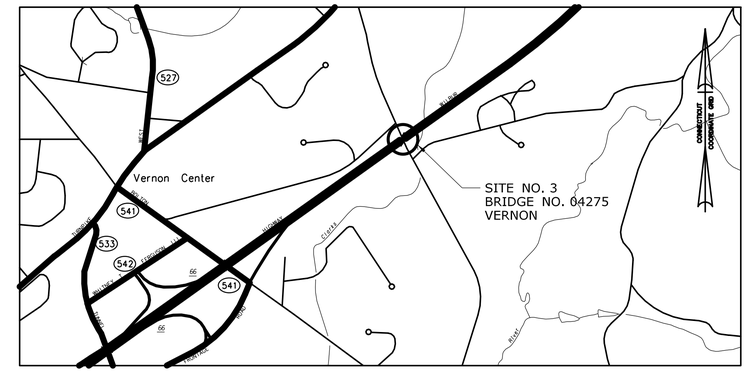

LOCATION PLAN - SITE NO. 3

SCALE: 1" = 1000'

ASPHALTIC PLUG DESIGN THERMAL MOVEMENT

THE DESIGN THERMAL MOVEMENT AT ABUTMENT NO. 1 IS 1.13".
THE DESIGN THERMAL MOVEMENT AT THE PIER IS 0".
THE DESIGN THERMAL MOVEMENT AT ABUTMENT NO. 2 IS 1.06".

NOTES:

1. ALL WORK TO SAWCUT BITUMINOUS PAVEMENT, REMOVE AND DISPOSE OF BITUMINOUS CONCRETE, MEMBRANE WATERPROOFING, EXISTING JOINT COMPONENTS AND SEALING ELEMENTS, EXCLUDING THE REMOVAL OF PORTLAND CEMENT CONCRETE HEADERS SHALL BE INCLUDED IN THE COST OF THE APPROPRIATE JOINT SYSTEM (SEE SPECIAL PROVISIONS).
2. ALL WORK INVOLVING REMOVAL AND RECONSTRUCTION OF CONCRETE, INCLUDING CONCRETE HEADERS, DECK SLABS, APPROACH SLABS, HAUNCHES, SIDEWALKS, AND PARAPETS, AS SHOWN ON THE PLANS, SHALL BE PAID UNDER THE ITEM "CONSTRUCT CONCRETE HEADERS".
3. THE CONCRETE SHALL BE CHIPPED OUT TO A SOUND SURFACE WITHIN THE LIMITS AS DESCRIBED ON THE PLANS. EXTREME CARE SHALL BE TAKEN WHERE REINFORCING STEEL IS UNCOVERED NOT TO DAMAGE THE STEEL OR ITS BOND IN THE SURROUNDING CONCRETE.
4. ALL EXPOSED REINFORCING STEEL SHALL BE THOROUGHLY CLEANED AND REUSED. THE EXISTING REINFORCING SHALL BE REPLACED WHEN:
   - EXISTING REBAR HAS LOST 25% OR MORE OF THE ORIGINAL CROSS SECTIONAL AREA.
   - EXISTING REBAR IS BROKEN.
   - AS ORDERED BY THE ENGINEER.
5. THE REMOVED AREAS SHALL BE FILLED AND FINISHED WITH FAST SETTING CONCRETE AND MATCH EXISTING GRADES.
6. WHERE EXISTING BRIDGE DECK JOINTS ARE CONCEALED BENEATH BITUMINOUS CONCRETE OVERLAY THE CONTRACTOR SHALL VERIFY THE BRIDGE DECK JOINT LOCATION AND HAVE THE LIMITS OF SAW-CUTTING APPROVED BY THE ENGINEER.
7. MEMBRANE WATERPROOFING SHALL BE "MEMBRANE WATERPROOFING (SHEET)(TORCH APPLIED)" AND SHALL BE PLACED PRIOR TO PLACEMENT OF HMA S0.25. THE CONTRACTOR MAY MASK OFF THE LIMITS OF THE PROPOSED HEADERS WHEN CONSTRUCTION THE HEADERS AS APPROVED BY THE ENGINEER.
8. FOR PARAPET AND SIDEWALK JOINT TREATMENT DETAILS, SEE DRAWING NO. S-02.
9. SEE DRAWING NO. S-08 FOR "SAWING AND SEALING JOINTS IN BITUMINOUS CONCRETE PAVEMENT" AT BOTH ABUTMENTS.
10. PAVEMENT MARKINGS SUCH AS 4" WHITE, 4" YELLOW, 6" WHITE, 8" WHITE, AND SYMBOLS AND LEGENDS THAT MAY BE REMOVED AS A RESULT OF CONSTRUCTION SHALL BE REPLACED WITH SIMILAR EPOXY RESIN PAVEMENT MARKINGS. THE COST OF THIS WORK SHALL BE INCLUDED IN THE GENERAL COST OF CONSTRUCTION.

REV.	DATE	REVISION DESCRIPTION	SHEET NO.
-	-	-	-
-	-	-	-
-	-	-	-
-	-	-	-
-	-	-	-
-	-	-	-

THE INFORMATION, INCLUDING ESTIMATED QUANTITIES OF WORK, SHOWN ON THESE SHEETS IS BASED ON LIMITED INVESTIGATIONS BY THE STATE AND IS IN NO WAY WARRANTED TO INDICATE THE CONDITIONS OF ACTUAL QUANTITIES OF WORK WHICH WILL BE REQUIRED.

Plotted Date: 7/2/2013

DESIGNER/DRAFTER: B.A./M.G.
CHECKED BY: J.H.M. II
SCALE AS NOTED

STATE OF CONNECTICUT
DEPARTMENT OF TRANSPORTATION

Filename: ...\SB_MSH_3_Br04275_171_367_S_07_GPN.dgn

SIGNATURE/BLOCK:
Close, Jensen and Miller, P.C.
1137 Silas Deane Highway
Wethersfield, CT 06109

PROJECT TITLE: REPLACEMENT OF EXPANSION JOINTS IN DISTRICT 1

TOWN: VERNON

DRAWING TITLE: GENERAL PLAN BRIDGE NO. 04275

PROJECT NO. 171-367
DRAWING NO. S-07
SHEET NO. 03.07

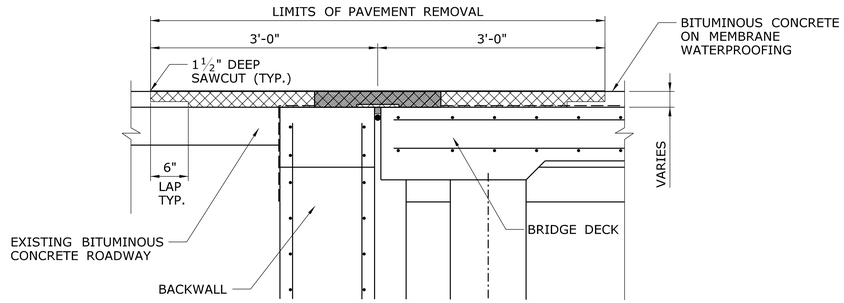

EXISTING CONDITION - LIMITS OF REMOVAL

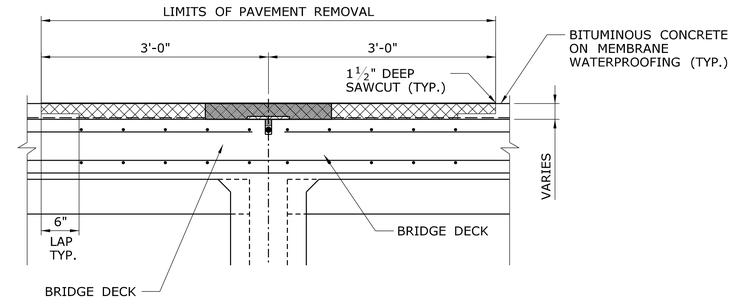

EXISTING CONDITION - LIMITS OF REMOVAL

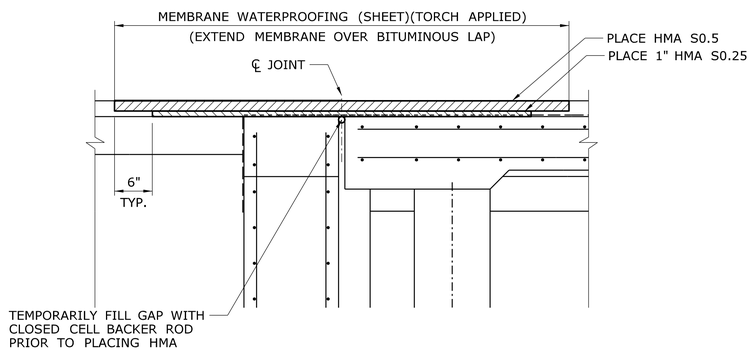

INTERMEDIATE CONDITION

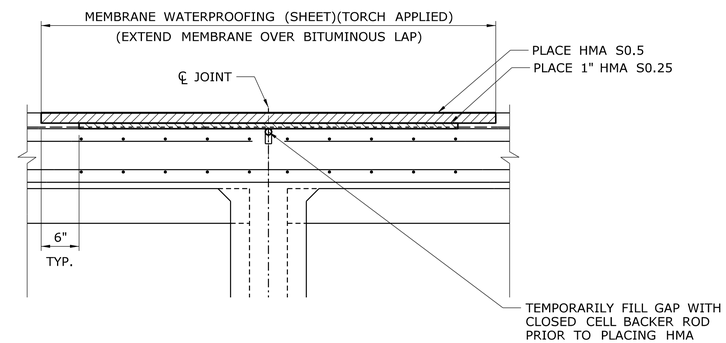

INTERMEDIATE CONDITION

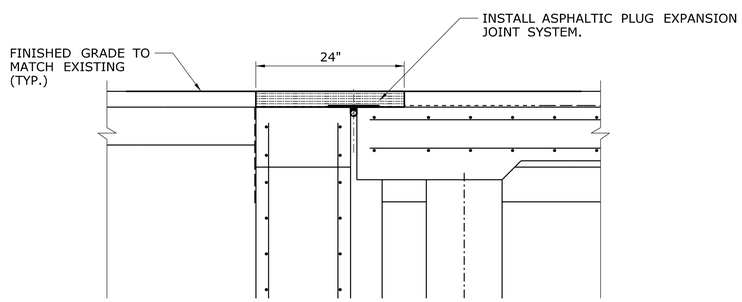

FINAL CONDITION
SECTION AT ABUTMENTS ROADWAY

SECTION A / S-07

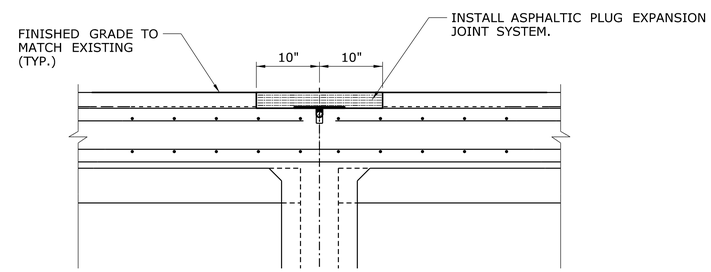

FINAL CONDITION
SECTION AT PIER ROADWAY

SECTION B / S-07

REV.	DATE	REVISION DESCRIPTION	SHEET NO.
-	-	-	-
-	-	-	-
-	-	-	-
-	-	-	-
-	-	-	-
-	-	-	-

THE INFORMATION, INCLUDING ESTIMATED QUANTITIES OF WORK, SHOWN ON THESE SHEETS IS BASED ON LIMITED INVESTIGATIONS BY THE STATE AND IS IN NO WAY WARRANTED TO INDICATE THE CONDITIONS OF ACTUAL QUANTITIES OF WORK WHICH WILL BE REQUIRED.

Plotted Date: 7/9/2013

DESIGNER/DRAFTER: **B.A./M.G.**
CHECKED BY: **J.H.M. II**
SCALE: 1" = 1'-0"

STATE OF CONNECTICUT
DEPARTMENT OF TRANSPORTATION

Filename: ...\SB_MSH_3_Br04275_171_367_S_08_JOINT.dgn

SIGNATURE/BLOCK:
Close, Jensen and Miller, P.C.
1137 Silas Deane Highway
Wethersfield, CT 06109

PROJECT TITLE:
REPLACEMENT OF EXPANSION JOINTS IN DISTRICT 1

TOWN: **VERNON**

DRAWING TITLE:
JOINT DETAILS
BRIDGE NO. 04275

PROJECT NO. **171-367**
DRAWING NO. **S-08**
SHEET NO. **03.08**

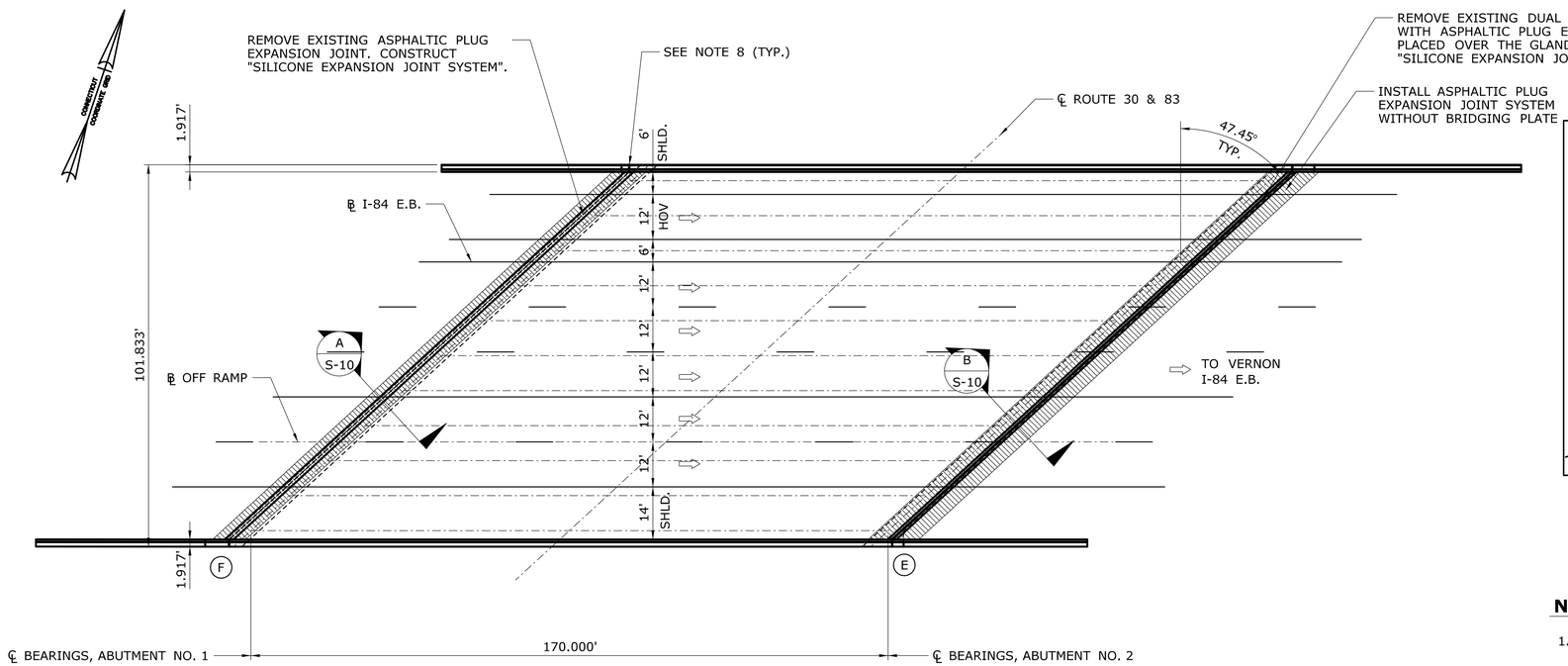

F FIXED BEARINGS

E EXPANSION BEARINGS

PLAN BRIDGE NO. 05230, SITE NO. 4
I-84 E.B. OVER ROUTE 30 AND ROUTE 83

SCALE: 1" = 20'

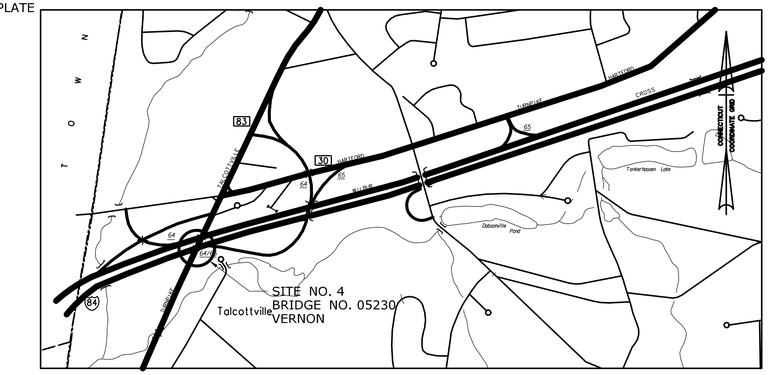

LOCATION PLAN - SITE NO. 4

SCALE: 1" = 1000'

SILICONE EXPANSION JOINT OPENING TABLE	
INSTALL TEMP. DEG. F°	PERPENDICULAR JOINT OPENING (IN.)
40°	2.59
50°	2.50
60°	2.41
70°	2.32
80°	2.23
90°	2.13

AT ABUTMENT NO. 2

NOTES:

1. ALL WORK TO SAWCUT BITUMINOUS PAVEMENT, REMOVE AND DISPOSE OF BITUMINOUS CONCRETE, MEMBRANE WATERPROOFING, EXISTING JOINT COMPONENTS AND SEALING ELEMENTS, EXCLUDING THE REMOVAL OF PORTLAND CEMENT CONCRETE HEADERS SHALL BE INCLUDED IN THE COST OF THE APPROPRIATE JOINT SYSTEM (SEE SPECIAL PROVISIONS).
2. ALL WORK INVOLVING REMOVAL AND RECONSTRUCTION OF CONCRETE, INCLUDING CONCRETE HEADERS, DECK SLABS, APPROACH SLABS, HAUNCHES, SIDEWALKS, AND PARAPETS, AS SHOWN ON THE PLANS, SHALL BE PAID UNDER THE ITEM "CONSTRUCT CONCRETE HEADERS".
3. THE CONCRETE SHALL BE CHIPPED OUT TO A SOUND SURFACE WITHIN THE LIMITS AS DESCRIBED ON THE PLANS. EXTREME CARE SHALL BE TAKEN WHERE REINFORCING STEEL IS UNCOVERED NOT TO DAMAGE THE STEEL OR ITS BOND IN THE SURROUNDING CONCRETE.
4. ALL EXPOSED REINFORCING STEEL SHALL BE THOROUGHLY CLEANED AND REUSED. THE EXISTING REINFORCING SHALL BE REPLACED WHEN:
   - EXISTING REBAR HAS LOST 25% OR MORE OF THE ORIGINAL CROSS SECTIONAL AREA.
   - EXISTING REBAR IS BROKEN.
   - AS ORDERED BY THE ENGINEER.
5. THE REMOVED AREAS SHALL BE FILLED AND FINISHED WITH FAST SETTING CONCRETE AND MATCH EXISTING GRADES.
6. WHERE EXISTING BRIDGE DECK JOINTS ARE CONCEALED BENEATH BITUMINOUS CONCRETE OVERLAY THE CONTRACTOR SHALL VERIFY THE BRIDGE DECK JOINT LOCATION AND HAVE THE LIMITS OF SAW-CUTTING APPROVED BY THE ENGINEER.
7. MEMBRANE WATERPROOFING SHALL BE "MEMBRANE WATERPROOFING (SHEET)(TORCH APPLIED)" AND SHALL BE PLACED PRIOR TO PLACEMENT OF HMA S0.25. THE CONTRACTOR MAY MASK OFF THE LIMITS OF THE PROPOSED HEADERS WHEN CONSTRUCTION THE HEADERS AS APPROVED BY THE ENGINEER.
8. FOR PARAPET AT ABUTMENT NO. 2 JOINT REMOVAL DETAILS, SEE DRAWING NO. S-11.
9. FOR PARAPET JOINT TREATMENT DETAILS, SEE DRAWING NO. S-03.
10. PAVEMENT MARKINGS SUCH AS 4" WHITE, 4" YELLOW, 6" WHITE, 8" WHITE, AND SYMBOLS AND LEGENDS THAT MAY BE REMOVED AS A RESULT OF CONSTRUCTION SHALL BE REPLACED WITH SIMILAR EPOXY RESIN PAVEMENT MARKINGS. THE COST OF THIS WORK SHALL BE INCLUDED IN THE GENERAL COST OF CONSTRUCTION.

ASPHALTIC PLUG DESIGN THERMAL MOVEMENT

THE DESIGN THERMAL MOVEMENT AT ABUTMENT NO. 2 IS 0".

REV.	DATE	REVISION DESCRIPTION	SHEET NO.
-	-	-	-
-	-	-	-
-	-	-	-
-	-	-	-
-	-	-	-
-	-	-	-

THE INFORMATION, INCLUDING ESTIMATED QUANTITIES OF WORK, SHOWN ON THESE SHEETS IS BASED ON LIMITED INVESTIGATIONS BY THE STATE AND IS IN NO WAY WARRANTED TO INDICATE THE CONDITIONS OF ACTUAL QUANTITIES OF WORK WHICH WILL BE REQUIRED.

Plotted Date: 7/2/2013

DESIGNER/DRAFTER: B.A./M.G.
CHECKED BY: J.H.M. II
SCALE AS NOTED

STATE OF CONNECTICUT
DEPARTMENT OF TRANSPORTATION

Filename: ...\SB_MSH_4_Br05230_171_367_S_09_GPN.dgn

SIGNATURE/BLOCK:
Close, Jensen and Miller, P.C.
1137 Silas Deane Highway
Wethersfield, CT 06109

PROJECT TITLE: REPLACEMENT OF EXPANSION JOINTS IN DISTRICT 1

TOWN: VERNON

DRAWING TITLE: GENERAL PLAN BRIDGE NO. 05230

PROJECT NO. 171-367
DRAWING NO. S-09
SHEET NO. 03.09

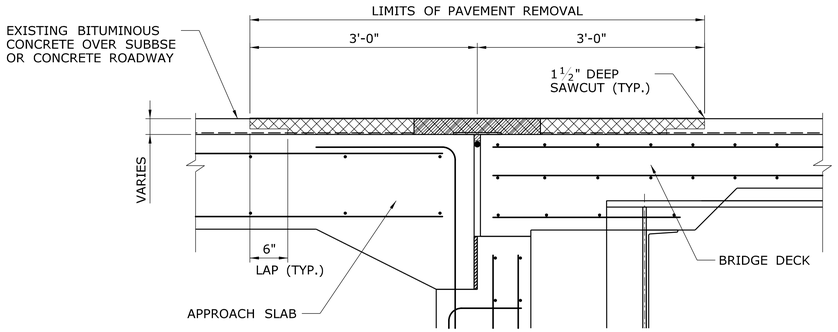

EXISTING CONDITION - LIMITS OF REMOVAL

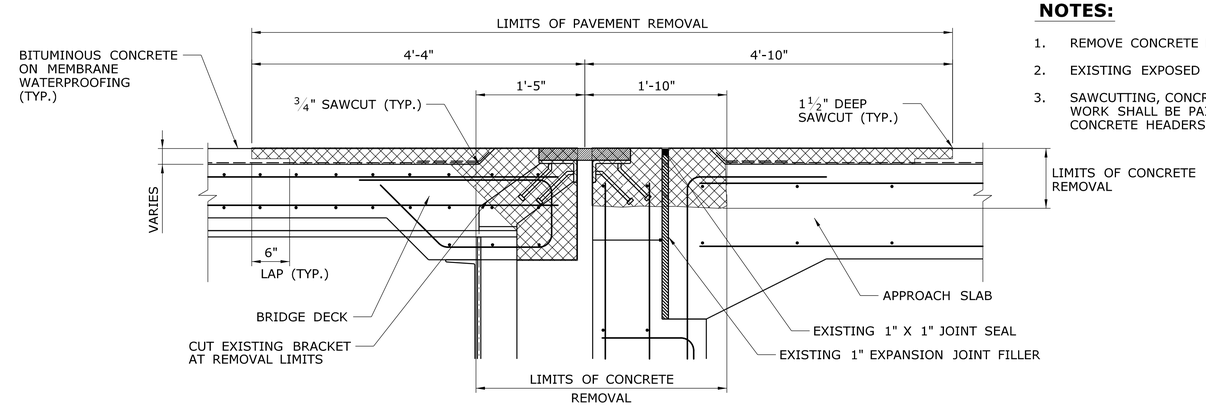

EXISTING CONDITION - LIMITS OF REMOVAL

NOTES:

1. REMOVE CONCRETE HEADER TO THE LIMITS SHOWN.
2. EXISTING EXPOSED REINFORCEMENT TO REMAIN.
3. SAWCUTTING, CONCRETE REMOVAL AND RECONSTRUCTION WORK SHALL BE PAID FOR UNDER THE ITEM "CONSTRUCT CONCRETE HEADERS", SEE SPECIAL PROVISION.

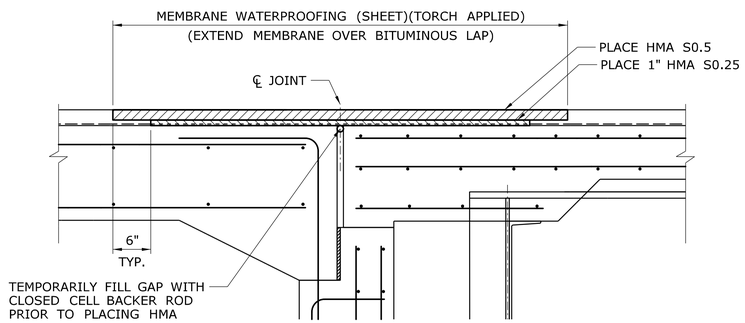

INTERMEDIATE CONDITION

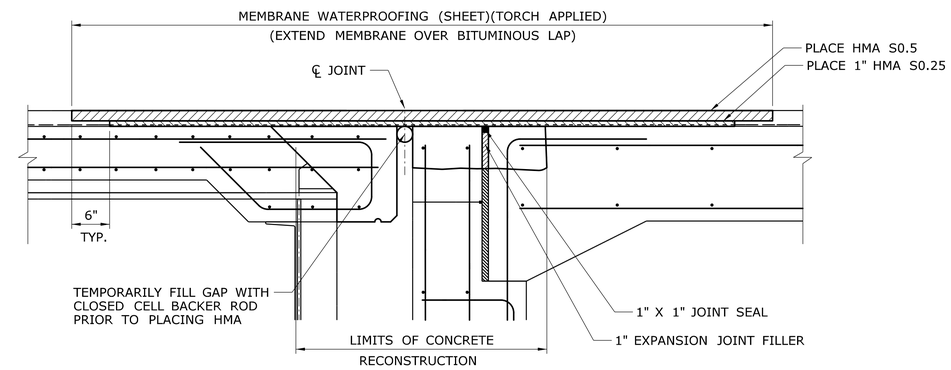

INTERMEDIATE CONDITION

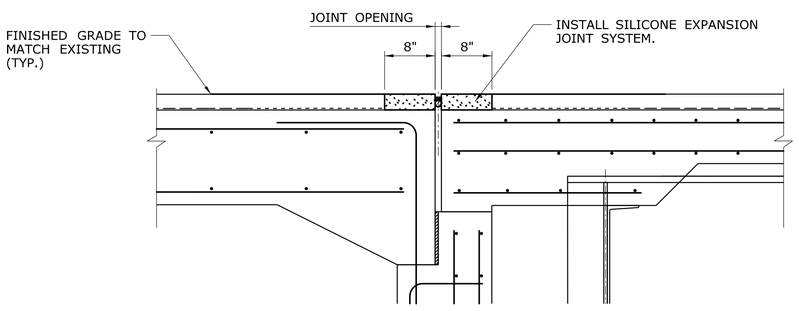

FINAL CONDITION

JOINT REPLACEMENT AT ABUTMENT NO. 1

SECTION A / S-09

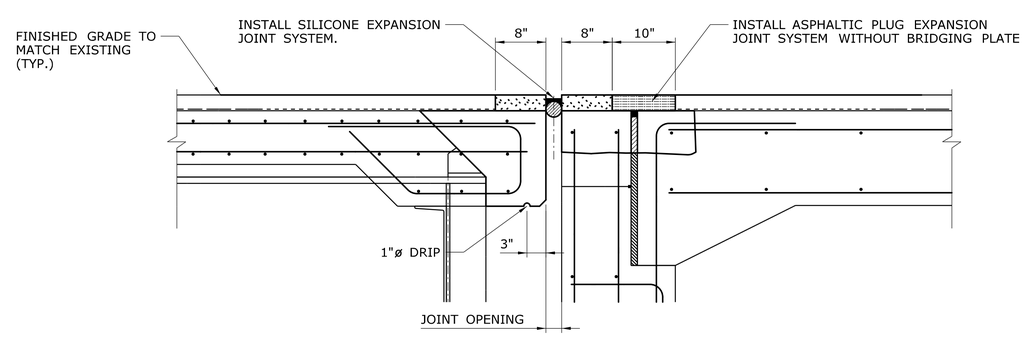

FINAL CONDITION

JOINT REPLACEMENT AT ABUTMENT NO. 2

SECTION B / S-09

REV.	DATE	REVISION DESCRIPTION	SHEET NO.
-	-	-	-
-	-	-	-
-	-	-	-
-	-	-	-
-	-	-	-
-	-	-	-

THE INFORMATION, INCLUDING ESTIMATED QUANTITIES OF WORK, SHOWN ON THESE SHEETS IS BASED ON LIMITED INVESTIGATIONS BY THE STATE AND IS IN NO WAY WARRANTED TO INDICATE THE CONDITIONS OF ACTUAL QUANTITIES OF WORK WHICH WILL BE REQUIRED.

Plotted Date: 7/2/2013

DESIGNER/DRAFTER: B.A./M.G.
CHECKED BY: J.H.M. II
SCALE: 1" = 1'-0"

STATE OF CONNECTICUT
DEPARTMENT OF TRANSPORTATION

Filename: ...\SB_MSH_4_Br05230_171_367_S_10_JOINT.dgn

SIGNATURE/BLOCK:
Close, Jensen and Miller, P.C.
1137 Silas Deane Highway
Wethersfield, CT 06109

PROJECT TITLE:
REPLACEMENT OF EXPANSION JOINTS IN DISTRICT 1

TOWN: **VERNON**

DRAWING TITLE:
JOINT DETAILS - 1
BRIDGE NO. 05230

PROJECT NO. 171-367
DRAWING NO. S-10
SHEET NO. 03.10

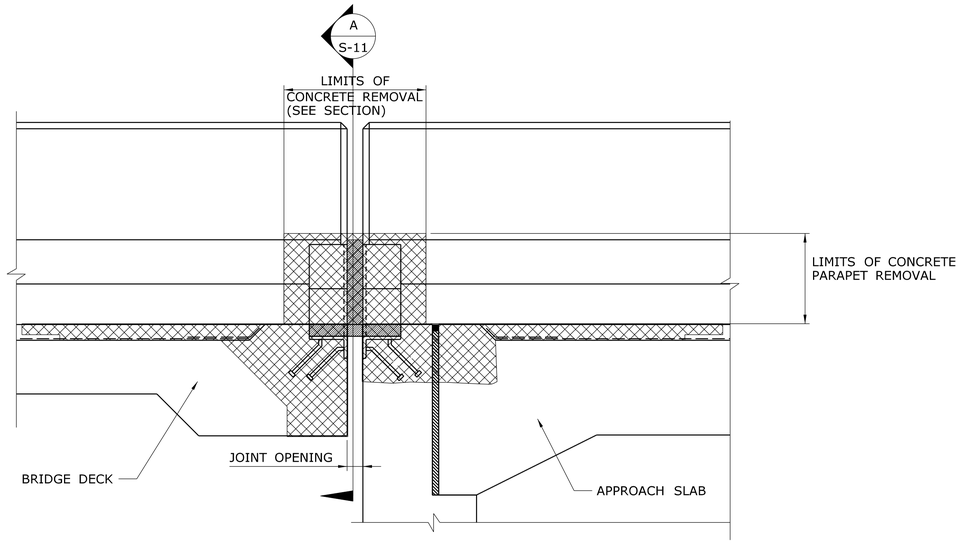

ELEVATION NORTH PARAPET
EXISTING CONDITION

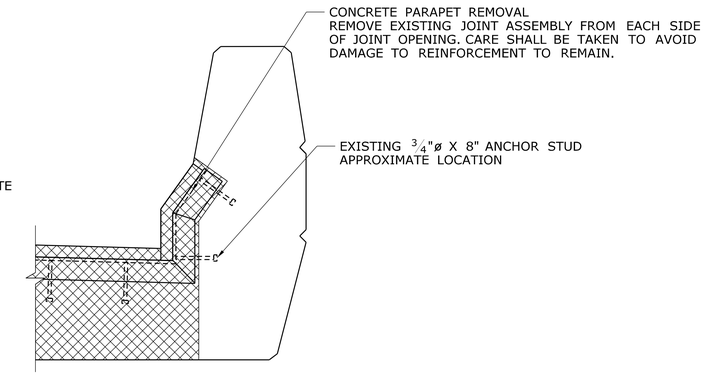

SECTION A S-11

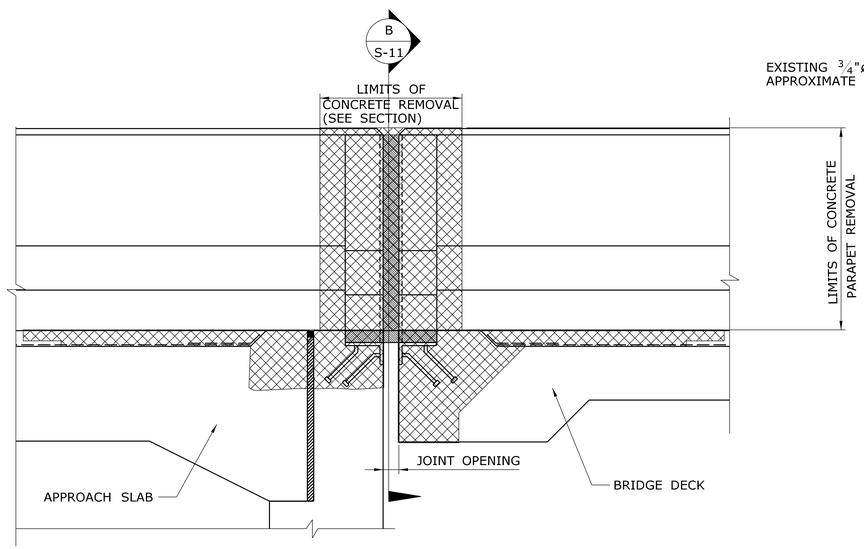

ELEVATION SOUTH PARAPET
EXISTING CONDITION

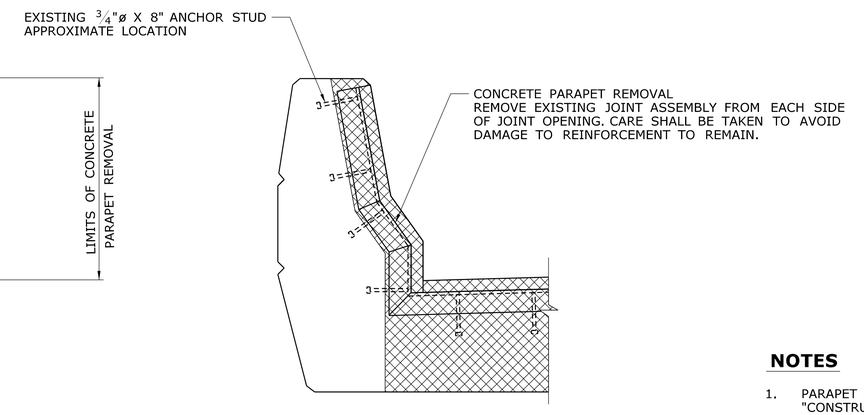

SECTION B S-11

NOTES

1. PARAPET RECONSTRUCTION WORK SHALL BE PAID FOR UNDER THE ITEM "CONSTRUCT CONCRETE HEADERS".
2. NEW CONCRETE SHALL MATCH SHAPE AND COLOR OF EXISTING PARAPET AS CLOSELY AS POSSIBLE.
3. FOR PARAPET JOINT TREATMENT DETAILS, SEE DRAWING NOS. S-03.

PARAPET JOINT REMOVAL AT ABUTMENT NO. 2

REV.	DATE	REVISION DESCRIPTION	SHEET NO.
-	-	-	-
-	-	-	-
-	-	-	-
-	-	-	-
-	-	-	-
-	-	-	-

THE INFORMATION, INCLUDING ESTIMATED QUANTITIES OF WORK, SHOWN ON THESE SHEETS IS BASED ON LIMITED INVESTIGATIONS BY THE STATE AND IS IN NO WAY WARRANTED TO INDICATE THE CONDITIONS OF ACTUAL QUANTITIES OF WORK WHICH WILL BE REQUIRED.

Plotted Date: 7/2/2013

DESIGNER/DRAFTER: B.A./M.G.
CHECKED BY: J.H.M. II
SCALE: 1" = 1'-0"

STATE OF CONNECTICUT
DEPARTMENT OF TRANSPORTATION

Filename: ...\SB_MSH_4_Br05230_171_367_S_11_JOINT.dgn

SIGNATURE/BLOCK:
Close, Jensen and Miller, P.C.
1137 Silas Deane Highway
Wethersfield, CT 06109

PROJECT TITLE:
REPLACEMENT OF EXPANSION JOINTS IN DISTRICT 1

TOWN: **VERNON**

DRAWING TITLE:
JOINT DETAILS - 2
BRIDGE NO. 05230

PROJECT NO. 171-367
DRAWING NO. S-11
SHEET NO. 03.11

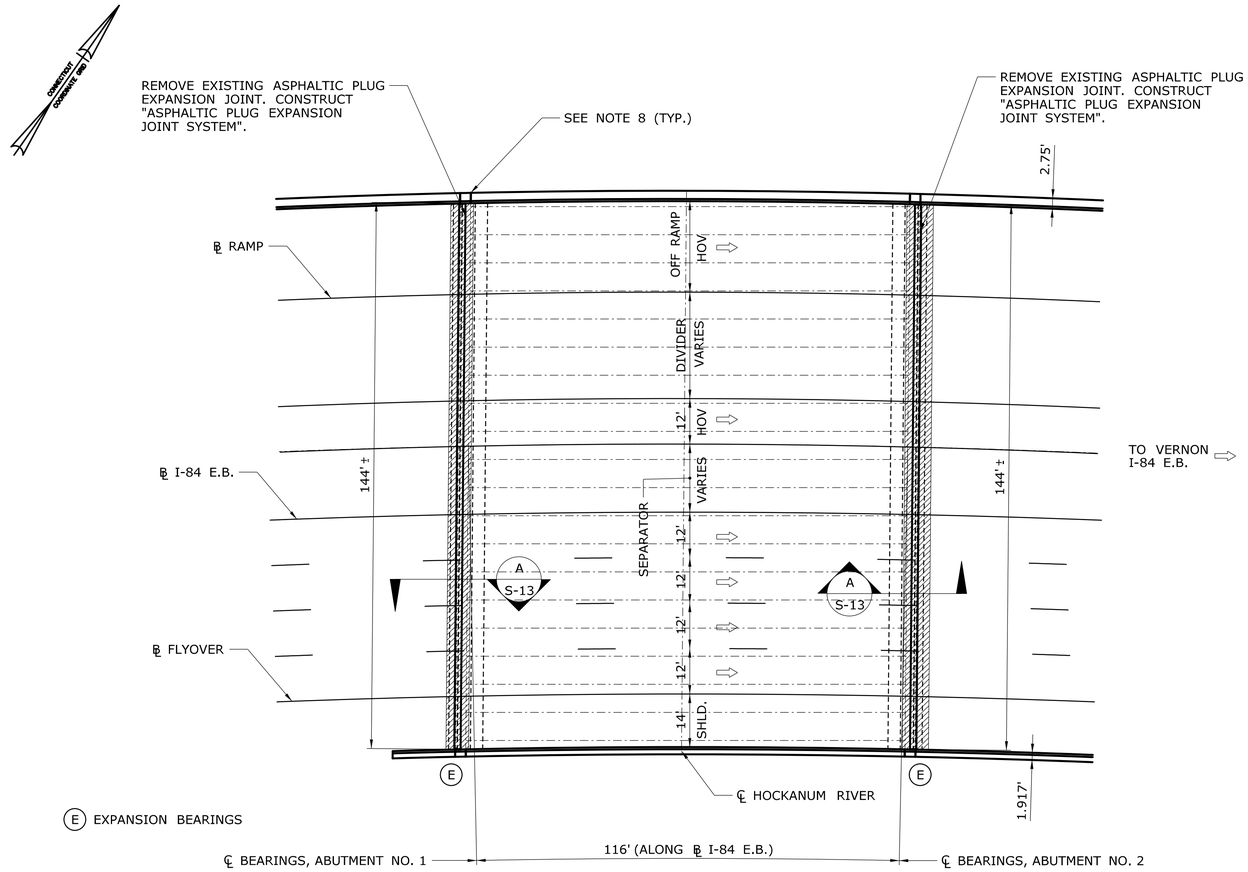

PLAN BRIDGE NO. 05228, SITE NO. 5
I-84 E.B. AND RAMP OVER HOCKANUM RIVER

SCALE: 1" = 20'

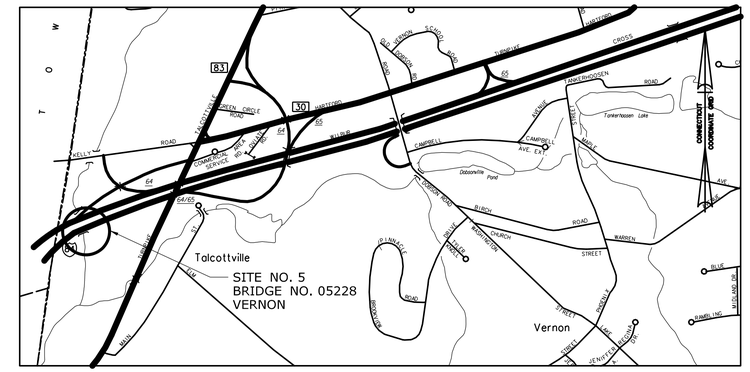

LOCATION PLAN - SITE NO. 5

SCALE: 1" = 1000'

NOTES:

1. ALL WORK TO SAWCUT BITUMINOUS PAVEMENT, REMOVE AND DISPOSE OF BITUMINOUS CONCRETE, MEMBRANE WATERPROOFING, EXISTING JOINT COMPONENTS AND SEALING ELEMENTS, EXCLUDING THE REMOVAL OF PORTLAND CEMENT CONCRETE HEADERS SHALL BE INCLUDED IN THE COST OF THE APPROPRIATE JOINT SYSTEM (SEE SPECIAL PROVISIONS).

2. ALL WORK INVOLVING REMOVAL AND RECONSTRUCTION OF CONCRETE, INCLUDING CONCRETE HEADERS, DECK SLABS, APPROACH SLABS, HAUNCHES, SIDEWALKS, AND PARAPETS, AS SHOWN ON THE PLANS, SHALL BE PAID UNDER THE ITEM "CONSTRUCT CONCRETE HEADERS".

3. THE CONCRETE SHALL BE CHIPPED OUT TO A SOUND SURFACE WITHIN THE LIMITS AS DESCRIBED ON THE PLANS. EXTREME CARE SHALL BE TAKEN WHERE REINFORCING STEEL IS UNCOVERED NOT TO DAMAGE THE STEEL OR ITS BOND IN THE SURROUNDING CONCRETE.

4. ALL EXPOSED REINFORCING STEEL SHALL BE THOROUGHLY CLEANED AND REUSED. THE EXISTING REINFORCING SHALL BE REPLACED WHEN:
   - EXISTING REBAR HAS LOST 25% OR MORE OF THE ORIGINAL CROSS SECTIONAL AREA.
   - EXISTING REBAR IS BROKEN.
   - AS ORDERED BY THE ENGINEER.

5. THE REMOVED AREAS SHALL BE FILLED AND FINISHED WITH FAST SETTING CONCRETE AND MATCH EXISTING GRADES.

6. WHERE EXISTING BRIDGE DECK JOINTS ARE CONCEALED BENEATH BITUMINOUS CONCRETE OVERLAY THE CONTRACTOR SHALL VERIFY THE BRIDGE DECK JOINT LOCATION AND HAVE THE LIMITS OF SAW-CUTTING APPROVED BY THE ENGINEER.

7. MEMBRANE WATERPROOFING SHALL BE "MEMBRANE WATERPROOFING (SHEET)(TORCH APPLIED)" AND SHALL BE PLACED PRIOR TO PLACEMENT OF HMA S0.25. THE CONTRACTOR MAY MASK OFF THE LIMITS OF THE PROPOSED HEADERS WHEN CONSTRUCTION THE HEADERS AS APPROVED BY THE ENGINEER.

8. FOR PARAPET JOINT TREATMENT DETAILS, SEE DRAWING NO. S-02.

9. PAVEMENT MARKINGS SUCH AS 4" WHITE, 4" YELLOW, 6" WHITE, 8" WHITE, AND SYMBOLS AND LEGENDS THAT MAY BE REMOVED AS A RESULT OF CONSTRUCTION SHALL BE REPLACED WITH SIMILAR EPOXY RESIN PAVEMENT MARKINGS. THE COST OF THIS WORK SHALL BE INCLUDED IN THE GENERAL COST OF CONSTRUCTION.

ASPHALTIC PLUG DESIGN THERMAL MOVEMENT

THE DESIGN THERMAL MOVEMENT AT ABUTMENT NO. 1 IS 1.07".
THE DESIGN THERMAL MOVEMENT AT ABUTMENT NO. 2 IS 1.07".

REV.	DATE	REVISION DESCRIPTION	SHEET NO.
-	-	-	-
-	-	-	-
-	-	-	-
-	-	-	-
-	-	-	-
-	-	-	-

THE INFORMATION, INCLUDING ESTIMATED QUANTITIES OF WORK, SHOWN ON THESE SHEETS IS BASED ON LIMITED INVESTIGATIONS BY THE STATE AND IS IN NO WAY WARRANTED TO INDICATE THE CONDITIONS OF ACTUAL QUANTITIES OF WORK WHICH WILL BE REQUIRED.

Plotted Date: 7/2/2013

DESIGNER/DRAFTER: B.A./M.G.
CHECKED BY: J.H.M. II
SCALE AS NOTED

STATE OF CONNECTICUT
DEPARTMENT OF TRANSPORTATION

Filename: ...\SB_MSH_5_Br05228_171_367_S_12_GPN.dgn

SIGNATURE/BLOCK:
Close, Jensen and Miller, P.C.
1137 Silas Deane Highway
Wethersfield, CT 06109

PROJECT TITLE: REPLACEMENT OF EXPANSION JOINTS IN DISTRICT 1

TOWN: VERNON

DRAWING TITLE: GENERAL PLAN BRIDGE NO. 05228

PROJECT NO. 171-367
DRAWING NO. S-12
SHEET NO. 03.12

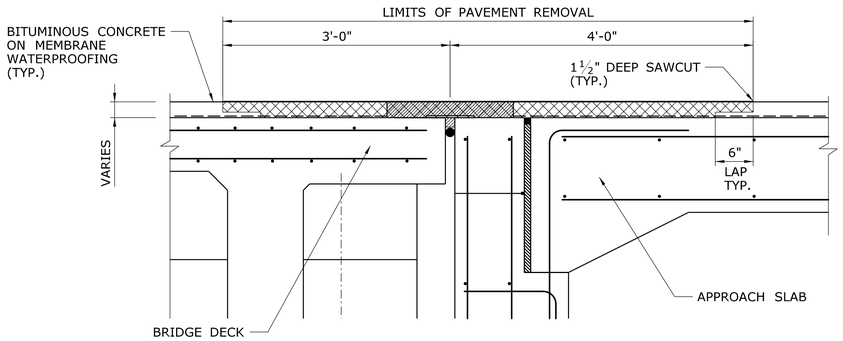

EXISTING CONDITION - LIMITS OF REMOVAL

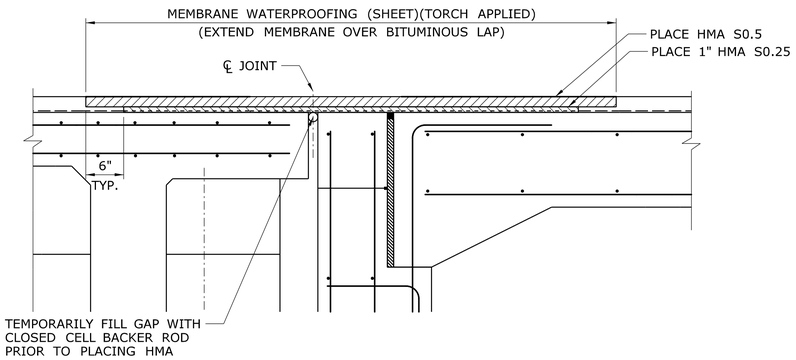

INTERMEDIATE CONDITION

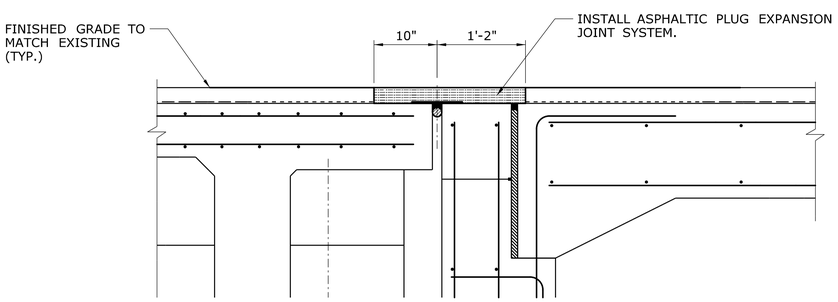

FINAL CONDITION

JOINT REPLACEMENT AT ABUTMENTS

SECTION A / S-12

REV.	DATE	REVISION DESCRIPTION	SHEET NO.
-		-	-
-	-	-	-
-	-	-	-
-	-	-	-
-	-	-	-
-	-	-	-

THE INFORMATION, INCLUDING ESTIMATED QUANTITIES OF WORK, SHOWN ON THESE SHEETS IS BASED ON LIMITED INVESTIGATIONS BY THE STATE AND IS IN NO WAY WARRANTED TO INDICATE THE CONDITIONS OF ACTUAL QUANTITIES OF WORK WHICH WILL BE REQUIRED.

Plotted Date: 7/2/2013

DESIGNER/DRAFTER: **B.A./M.G.**

CHECKED BY: **J.H.M. II**

SCALE: 1" = 1'-0"

STATE OF CONNECTICUT
DEPARTMENT OF TRANSPORTATION

Filename: ...\SB_MSH_5_Br05228_171_367_S_13_JOINT.dgn

SIGNATURE/ BLOCK:

JOHN H. MILLER JR. NO. 4142 LICENSED PROFESSIONAL ENGINEER

Close, Jensen and Miller, P.C.
1137 Silas Deane Highway
Wethersfield, CT 06109

PROJECT TITLE:

REPLACEMENT OF EXPANSION JOINTS IN DISTRICT 1

TOWN: **VERNON**

DRAWING TITLE: **JOINT DETAILS BRIDGE NO. 05228**

PROJECT NO. **171-367**

DRAWING NO. **S-13**

SHEET NO. **03.13**

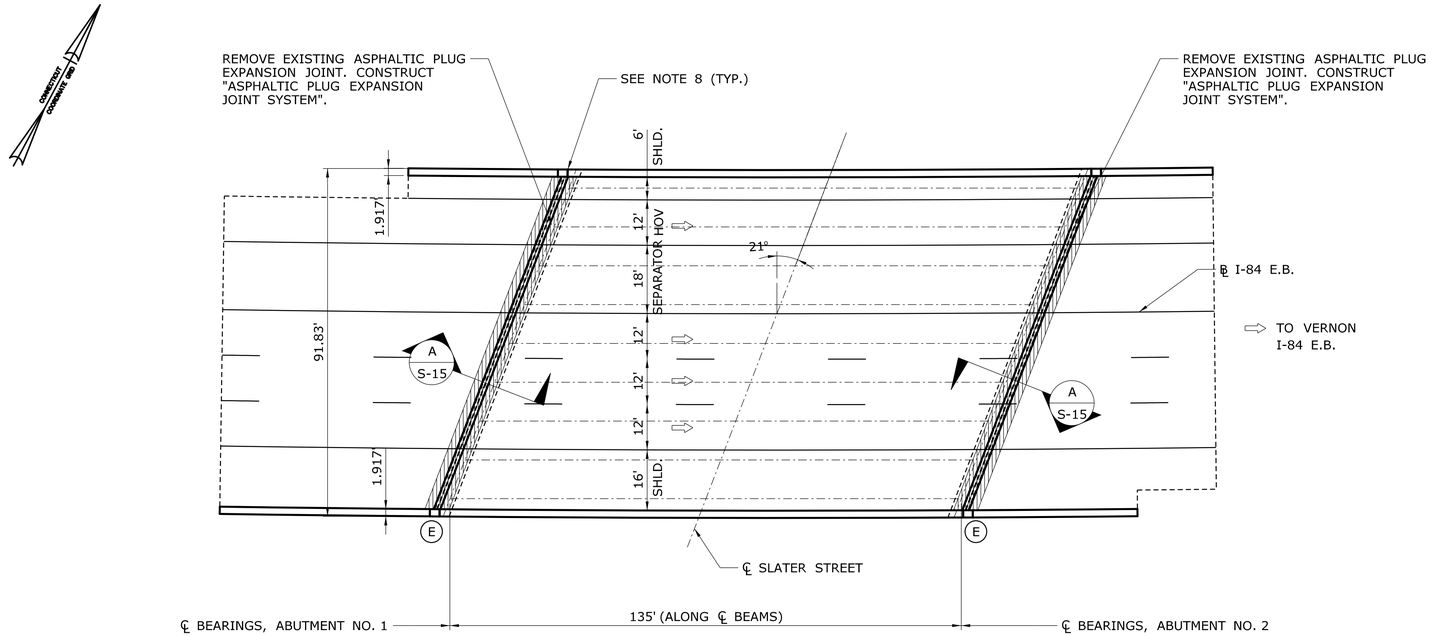

(E) EXPANSION BEARINGS

PLAN BRIDGE NO. 05444, SITE NO. 6
I-84 E.B. OVER SLATER STREET

SCALE: 1" = 20'

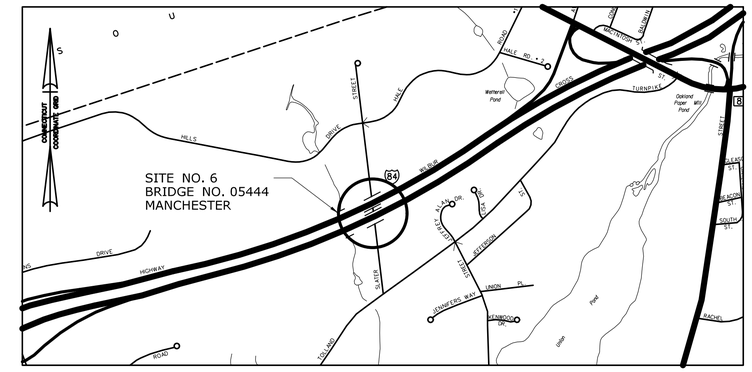

LOCATION PLAN - SITE NO. 6

SCALE: 1" = 1000'

NOTES:

1. ALL WORK TO SAWCUT BITUMINOUS PAVEMENT, REMOVE AND DISPOSE OF BITUMINOUS CONCRETE, MEMBRANE WATERPROOFING, EXISTING JOINT COMPONENTS AND SEALING ELEMENTS, EXCLUDING THE REMOVAL OF PORTLAND CEMENT CONCRETE HEADERS SHALL BE INCLUDED IN THE COST OF THE APPROPRIATE JOINT SYSTEM (SEE SPECIAL PROVISIONS).
2. ALL WORK INVOLVING REMOVAL AND RECONSTRUCTION OF CONCRETE, INCLUDING CONCRETE HEADERS, DECK SLABS, APPROACH SLABS, HAUNCHES, SIDEWALKS, AND PARAPETS, AS SHOWN ON THE PLANS, SHALL BE PAID UNDER THE ITEM "CONSTRUCT CONCRETE HEADERS".
3. THE CONCRETE SHALL BE CHIPPED OUT TO A SOUND SURFACE WITHIN THE LIMITS AS DESCRIBED ON THE PLANS. EXTREME CARE SHALL BE TAKEN WHERE REINFORCING STEEL IS UNCOVERED NOT TO DAMAGE THE STEEL OR ITS BOND IN THE SURROUNDING CONCRETE.
4. ALL EXPOSED REINFORCING STEEL SHALL BE THOROUGHLY CLEANED AND REUSED. THE EXISTING REINFORCING SHALL BE REPLACED WHEN:
   - EXISTING REBAR HAS LOST 25% OR MORE OF THE ORIGINAL CROSS SECTIONAL AREA.
   - EXISTING REBAR IS BROKEN.
   - AS ORDERED BY THE ENGINEER.
5. THE REMOVED AREAS SHALL BE FILLED AND FINISHED WITH FAST SETTING CONCRETE AND MATCH EXISTING GRADES.
6. WHERE EXISTING BRIDGE DECK JOINTS ARE CONCEALED BENEATH BITUMINOUS CONCRETE OVERLAY THE CONTRACTOR SHALL VERIFY THE BRIDGE DECK JOINT LOCATION AND HAVE THE LIMITS OF SAW-CUTTING APPROVED BY THE ENGINEER.
7. MEMBRANE WATERPROOFING SHALL BE "MEMBRANE WATERPROOFING (SHEET)(TORCH APPLIED)" AND SHALL BE PLACED PRIOR TO PLACEMENT OF HMA S0.25. THE CONTRACTOR MAY MASK OFF THE LIMITS OF THE PROPOSED HEADERS WHEN CONSTRUCTION THE HEADERS AS APPROVED BY THE ENGINEER.
8. FOR PARAPET JOINT TREATMENT DETAILS, SEE DRAWING NO. S-02.
9. PAVEMENT MARKINGS SUCH AS 4" WHITE, 4" YELLOW, 6" WHITE, 8" WHITE, AND SYMBOLS AND LEGENDS THAT MAY BE REMOVED AS A RESULT OF CONSTRUCTION SHALL BE REPLACED WITH SIMILAR EPOXY RESIN PAVEMENT MARKINGS. THE COST OF THIS WORK SHALL BE INCLUDED IN THE GENERAL COST OF CONSTRUCTION.

ASPHALTIC PLUG DESIGN THERMAL MOVEMENT

THE DESIGN THERMAL MOVEMENT AT ABUTMENT NO. 1 IS 1.24".
THE DESIGN THERMAL MOVEMENT AT ABUTMENT NO. 2 IS 1.24".

REV.	DATE	REVISION DESCRIPTION	SHEET NO.
-	-	-	-
-	-	-	-
-	-	-	-
-	-	-	-
-	-	-	-
-	-	-	-

THE INFORMATION, INCLUDING ESTIMATED QUANTITIES OF WORK, SHOWN ON THESE SHEETS IS BASED ON LIMITED INVESTIGATIONS BY THE STATE AND IS IN NO WAY WARRANTED TO INDICATE THE CONDITIONS OF ACTUAL QUANTITIES OF WORK WHICH WILL BE REQUIRED.

Plotted Date: 7/2/2013

DESIGNER/DRAFTER: B.A./M.G.
CHECKED BY: J.H.M. II
SCALE AS NOTED

STATE OF CONNECTICUT
DEPARTMENT OF TRANSPORTATION

Filename: ...\SB_MSH_6_Br05444_171_367_S_14_GPN.dgn

SIGNATURE/ BLOCK:
Close, Jensen and Miller, P.C.
1137 Silas Deane Highway
Wethersfield, CT 06109

PROJECT TITLE: REPLACEMENT OF EXPANSION JOINTS IN DISTRICT 1

TOWN: MANCHESTER

DRAWING TITLE: GENERAL PLAN BRIDGE NO. 05444

PROJECT NO. 171-367
DRAWING NO. S-14
SHEET NO. 03.14

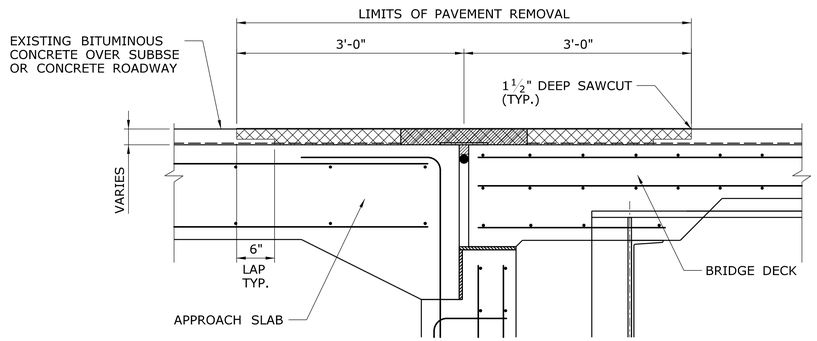

EXISTING CONDITION - LIMITS OF REMOVAL

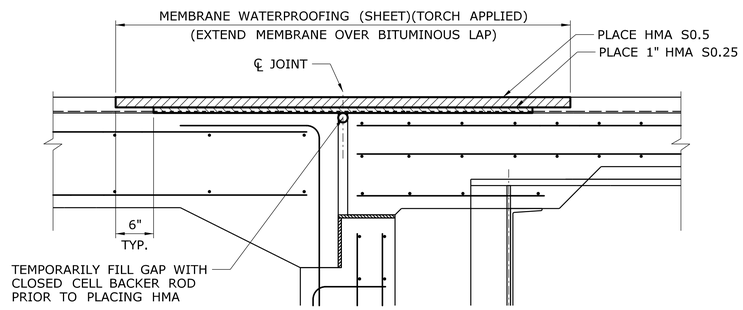

INTERMEDIATE CONDITION

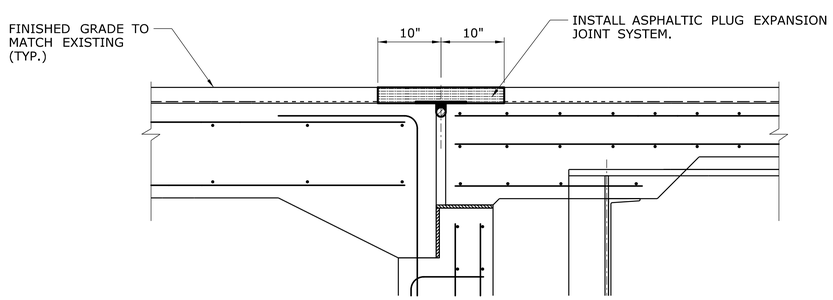

FINAL CONDITION

JOINT REPLACEMENT AT ABUTMENTS

SECTION A / S-14

REV.	DATE	REVISION DESCRIPTION	SHEET NO.
-	-	-	-
-	-	-	-
-	-	-	-
-	-	-	-
-	-	-	-
-	-	-	-

THE INFORMATION, INCLUDING ESTIMATED QUANTITIES OF WORK, SHOWN ON THESE SHEETS IS BASED ON LIMITED INVESTIGATIONS BY THE STATE AND IS IN NO WAY WARRANTED TO INDICATE THE CONDITIONS OF ACTUAL QUANTITIES OF WORK WHICH WILL BE REQUIRED.

Plotted Date: 7/2/2013

DESIGNER/DRAFTER: **B.A./M.G.**

CHECKED BY: **J.H.M. II**

SCALE: 1" = 1'-0"

STATE OF CONNECTICUT
DEPARTMENT OF TRANSPORTATION

Filename: ...\SB_MSH_6_Br05444_171_367_S_15_JOINT.dgn

SIGNATURE/ BLOCK:

STATE OF CONNECTICUT NO. 4142 LICENSED PROFESSIONAL ENGINEER

Close, Jensen and Miller, P.C.
1137 Silas Deane Highway
Wethersfield, CT 06109

PROJECT TITLE:

REPLACEMENT OF EXPANSION JOINTS IN DISTRICT 1

TOWN: **MANCHESTER**

DRAWING TITLE: **JOINT DETAILS BRIDGE NO. 05444**

PROJECT NO. **171-367**

DRAWING NO. **S-15**

SHEET NO. **03.15**

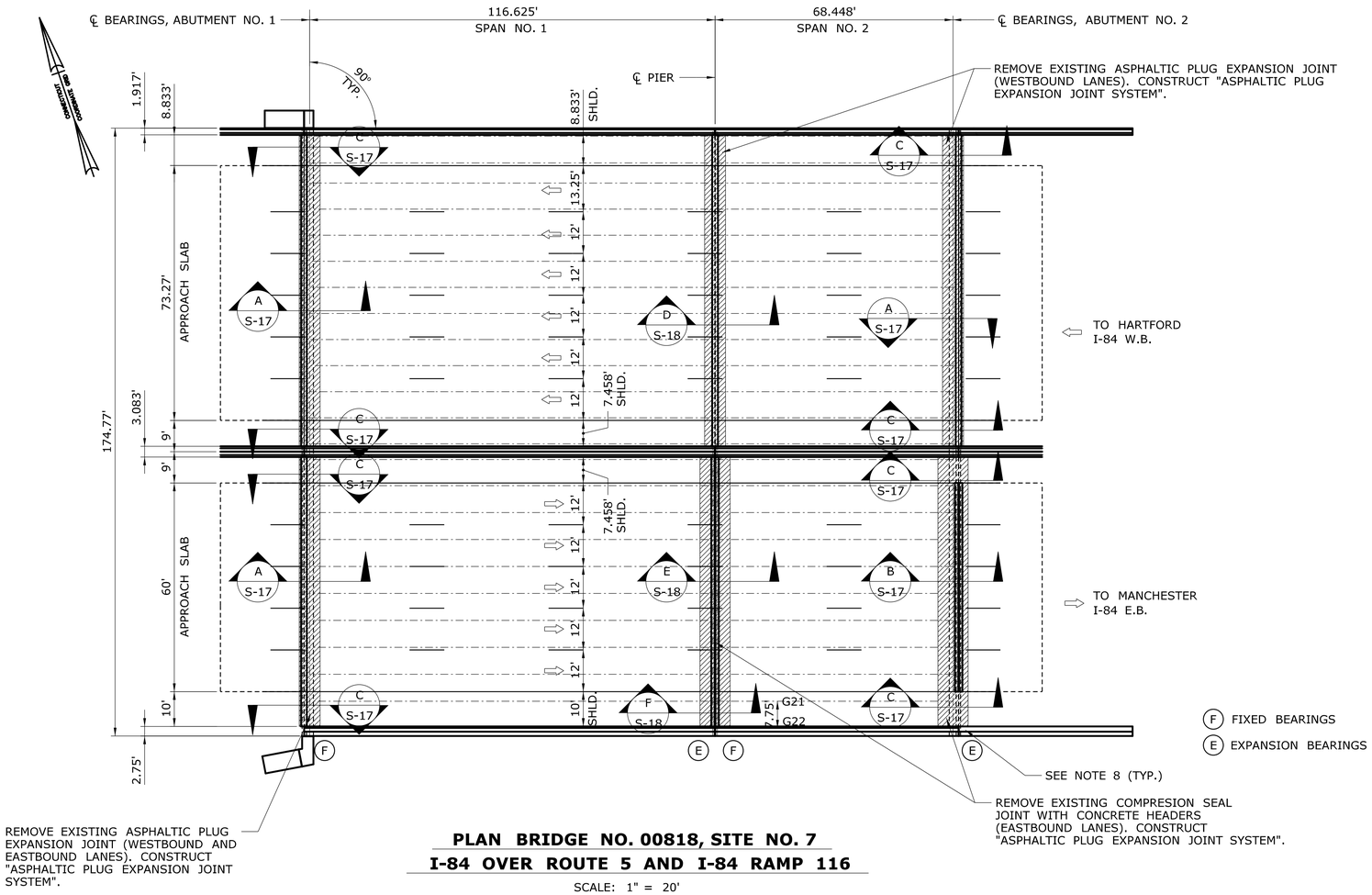

PLAN BRIDGE NO. 00818, SITE NO. 7
I-84 OVER ROUTE 5 AND I-84 RAMP 116

SCALE: 1" = 20'

LOCATION PLAN - SITE NO. 7

SCALE: 1" = 1000'

NOTES:

1. ALL WORK TO SAWCUT BITUMINOUS PAVEMENT, REMOVE AND DISPOSE OF BITUMINOUS CONCRETE, MEMBRANE WATERPROOFING, EXISTING JOINT COMPONENTS AND SEALING ELEMENTS, EXCLUDING THE REMOVAL OF PORTLAND CEMENT CONCRETE HEADERS SHALL BE INCLUDED IN THE COST OF THE APPROPRIATE JOINT SYSTEM (SEE SPECIAL PROVISIONS).
2. ALL WORK INVOLVING REMOVAL AND RECONSTRUCTION OF CONCRETE, INCLUDING CONCRETE HEADERS, DECK SLABS, APPROACH SLABS, HAUNCHES, SIDEWALKS, AND PARAPETS, AS SHOWN ON THE PLANS, SHALL BE PAID UNDER THE ITEM "CONSTRUCT CONCRETE HEADERS".
3. THE CONCRETE SHALL BE CHIPPED OUT TO A SOUND SURFACE WITHIN THE LIMITS AS DESCRIBED ON THE PLANS. EXTREME CARE SHALL BE TAKEN WHERE REINFORCING STEEL IS UNCOVERED NOT TO DAMAGE THE STEEL OR ITS BOND IN THE SURROUNDING CONCRETE.
4. ALL EXPOSED REINFORCING STEEL SHALL BE THOROUGHLY CLEANED AND REUSED. THE EXISTING REINFORCING SHALL BE REPLACED WHEN:
   - EXISTING REBAR HAS LOST 25% OR MORE OF THE ORIGINAL CROSS SECTIONAL AREA.
   - EXISTING REBAR IS BROKEN.
   - AS ORDERED BY THE ENGINEER.
5. THE REMOVED AREAS SHALL BE FILLED AND FINISHED WITH FAST SETTING CONCRETE AND MATCH EXISTING GRADES.
6. WHERE EXISTING BRIDGE DECK JOINTS ARE CONCEALED BENEATH BITUMINOUS CONCRETE OVERLAY THE CONTRACTOR SHALL VERIFY THE BRIDGE DECK JOINT LOCATION AND HAVE THE LIMITS OF SAW-CUTTING APPROVED BY THE ENGINEER.
7. MEMBRANE WATERPROOFING SHALL BE "MEMBRANE WATERPROOFING (SHEET)(TORCH APPLIED)" AND SHALL BE PLACED PRIOR TO PLACEMENT OF HMA S0.25. THE CONTRACTOR MAY MASK OFF THE LIMITS OF THE PROPOSED HEADERS WHEN CONSTRUCTION THE HEADERS AS APPROVED BY THE ENGINEER.
8. FOR PARAPET JOINT TREATMENT DETAILS, SEE DRAWING NO. S-02.
9. PAVEMENT MARKINGS SUCH AS 4" WHITE, 4" YELLOW, 6" WHITE, 8" WHITE, AND SYMBOLS AND LEGENDS THAT MAY BE REMOVED AS A RESULT OF CONSTRUCTION SHALL BE REPLACED WITH SIMILAR EPOXY RESIN PAVEMENT MARKINGS. THE COST OF THIS WORK SHALL BE INCLUDED IN THE GENERAL COST OF CONSTRUCTION.

ASPHALTIC PLUG DESIGN THERMAL MOVEMENT

THE DESIGN THERMAL MOVEMENT AT ABUTMENT NO 1 IS 0".
THE DESIGN THERMAL MOVEMENT AT PIER NO. 1 IS 1.07".
THE DESIGN THERMAL MOVEMENT AT ABUTMENT NO. 2 IS 0.63".

REV.	DATE	REVISION DESCRIPTION	SHEET NO.
-	-	-	-
-	-	-	-
-	-	-	-
-	-	-	-
-	-	-	-
-	-	-	-

THE INFORMATION, INCLUDING ESTIMATED QUANTITIES OF WORK, SHOWN ON THESE SHEETS IS BASED ON LIMITED INVESTIGATIONS BY THE STATE AND IS IN NO WAY WARRANTED TO INDICATE THE CONDITIONS OF ACTUAL QUANTITIES OF WORK WHICH WILL BE REQUIRED.

Plotted Date: 7/2/2013

DESIGNER/DRAFTER: B.A./M.G.
CHECKED BY: J.H.M. II
SCALE AS NOTED

STATE OF CONNECTICUT
DEPARTMENT OF TRANSPORTATION

Filename: ...\SB_MSH_7_Br00818_171_367_S_16_GPN.dgn

SIGNATURE/BLOCK:
Close, Jensen and Miller, P.C.
1137 Silas Deane Highway
Wethersfield, CT 06109

PROJECT TITLE: REPLACEMENT OF EXPANSION JOINTS IN DISTRICT 1

TOWN: EAST HARTFORD

DRAWING TITLE: GENERAL PLAN BRIDGE NO. 00818

PROJECT NO. 171-367
DRAWING NO. S-16
SHEET NO. 03.16

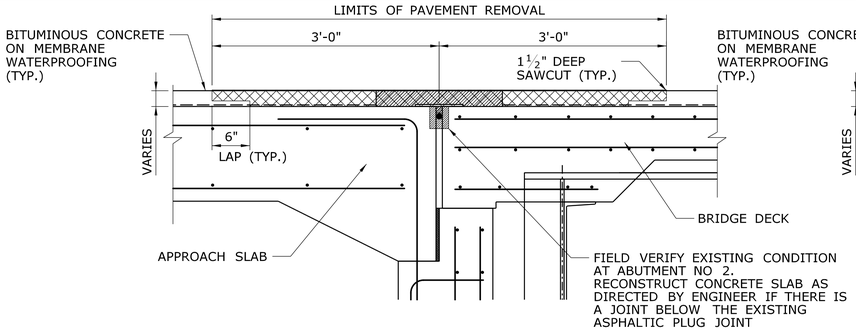

EXISTING CONDITION - LIMITS OF REMOVAL

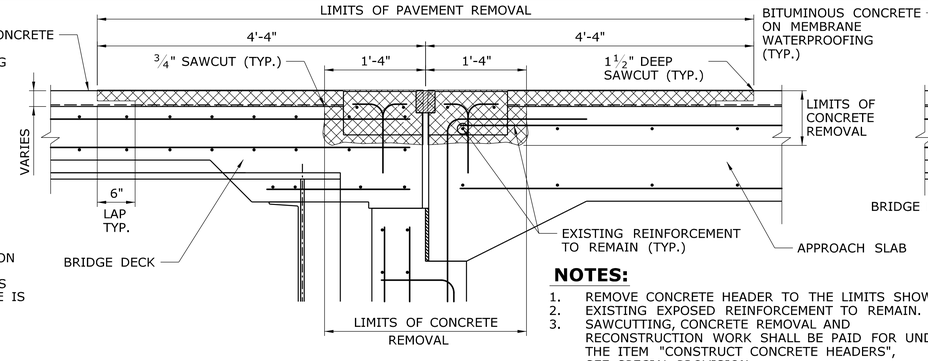

NOTES:

1. REMOVE CONCRETE HEADER TO THE LIMITS SHOWN.
2. EXISTING EXPOSED REINFORCEMENT TO REMAIN.
3. SAWCUTTING, CONCRETE REMOVAL AND RECONSTRUCTION WORK SHALL BE PAID FOR UNDER THE ITEM "CONSTRUCT CONCRETE HEADERS", SEE SPECIAL PROVISION.

EXISTING CONDITION - LIMITS OF REMOVAL

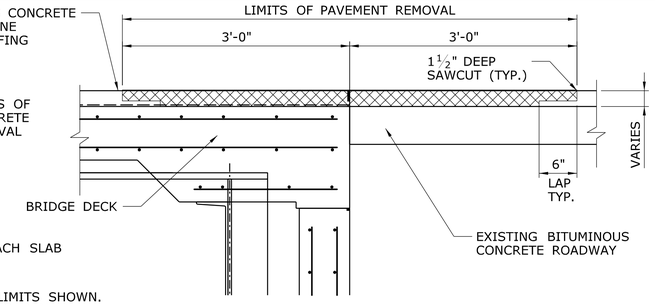

EXISTING CONDITION - LIMITS OF REMOVAL

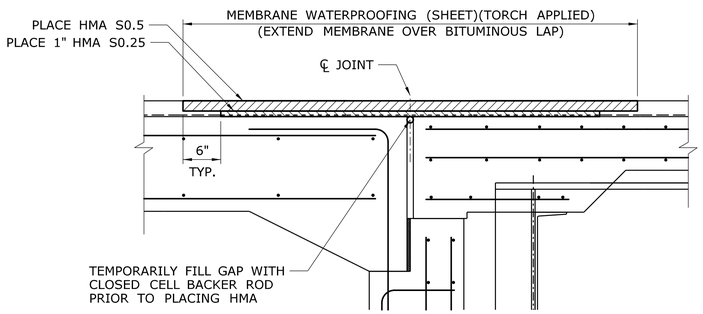

INTERMEDIATE CONDITION

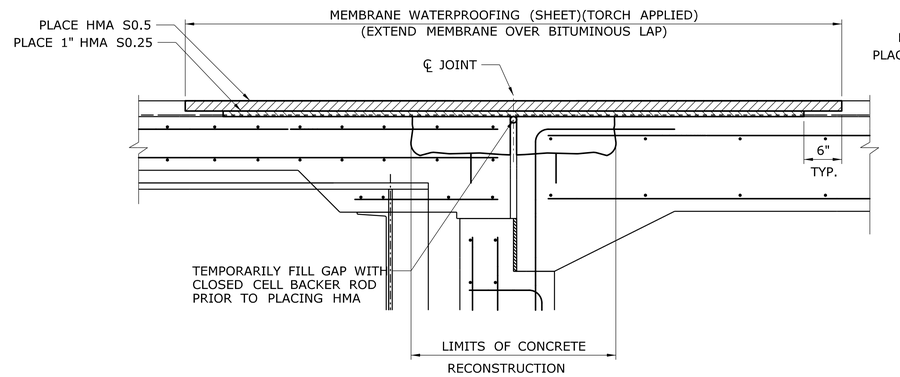

INTERMEDIATE CONDITION

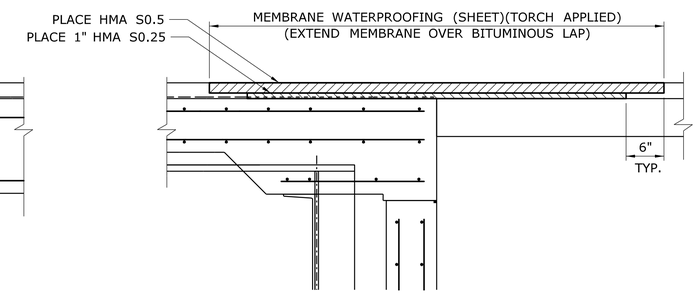

INTERMEDIATE CONDITION

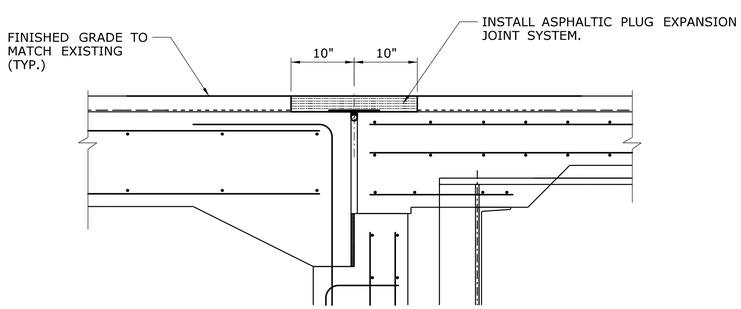

FINAL CONDITION

JOINT REPLACEMENT AT ABUTMENT NO. 1 W.B. AND E.B.

AND ABUTMENT NO. 2 W.B.

SECTION A / S-16

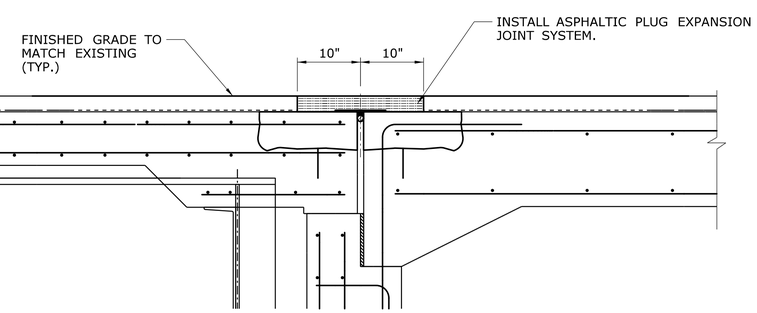

FINAL CONDITION

JOINT REPLACEMENT AT ABUTMENT NO. 2 E.B.

SECTION B / S-16

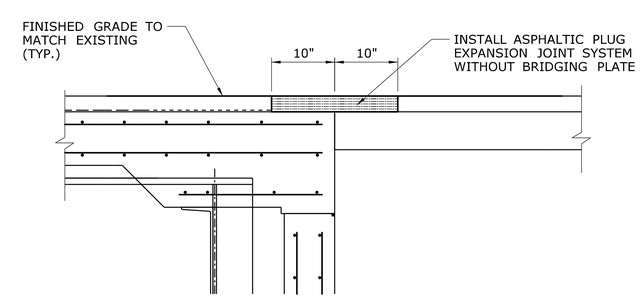

FINAL CONDITION

JOINT REPLACEMENT

AT ABUTMENT NOS. 1 AND 2 W.B. AND E.B. SHOULDERS

SECTION C / S-16

REV.	DATE	REVISION DESCRIPTION	SHEET NO.
-	-	-	-
-	-	-	-
-	-	-	-
-	-	-	-
-	-	-	-
-	-	-	-

THE INFORMATION, INCLUDING ESTIMATED QUANTITIES OF WORK, SHOWN ON THESE SHEETS IS BASED ON LIMITED INVESTIGATIONS BY THE STATE AND IS IN NO WAY WARRANTED TO INDICATE THE CONDITIONS OF ACTUAL QUANTITIES OF WORK WHICH WILL BE REQUIRED.

Plotted Date: 7/2/2013

DESIGNER/DRAFTER: **B.A./M.G.**

CHECKED BY: **J.H.M. II**

SCALE: 1" = 1'-0"

STATE OF CONNECTICUT
DEPARTMENT OF TRANSPORTATION

Filename: ...\SB_MSH_7_Br00818_171_367_S_17_JOINT.dgn

SIGNATURE/BLOCK:

Close, Jensen and Miller, P.C.
1137 Silas Deane Highway
Wethersfield, CT 06109

PROJECT TITLE:

REPLACEMENT OF EXPANSION JOINTS IN DISTRICT 1

TOWN: **EAST HARTFORD**

DRAWING TITLE: **JOINT DETAILS - 1**
BRIDGE NO. 00818

PROJECT NO. **171-367**

DRAWING NO. **S-17**

SHEET NO. **03.17**

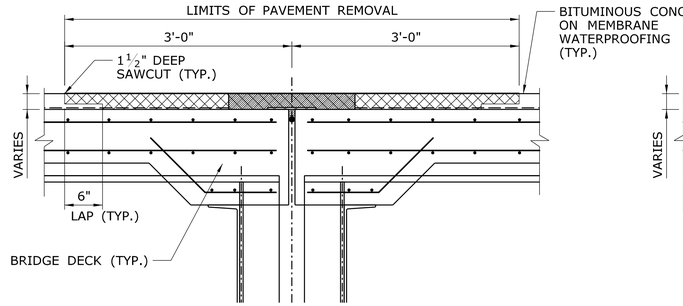

EXISTING CONDITION - LIMITS OF REMOVAL

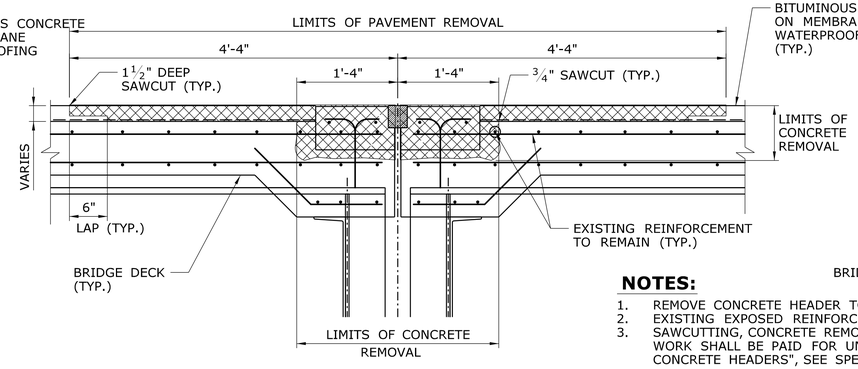

EXISTING CONDITION - LIMITS OF REMOVAL

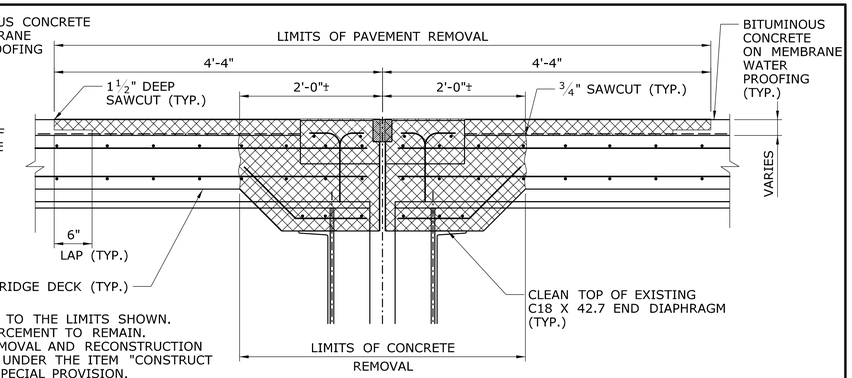

EXISTING CONDITION - LIMITS OF REMOVAL

NOTES:

1. REMOVE CONCRETE HEADER TO THE LIMITS SHOWN.
2. EXISTING EXPOSED REINFORCEMENT TO REMAIN.
3. SAWCUTTING, CONCRETE REMOVAL AND RECONSTRUCTION WORK SHALL BE PAID FOR UNDER THE ITEM "CONSTRUCT CONCRETE HEADERS", SEE SPECIAL PROVISION.

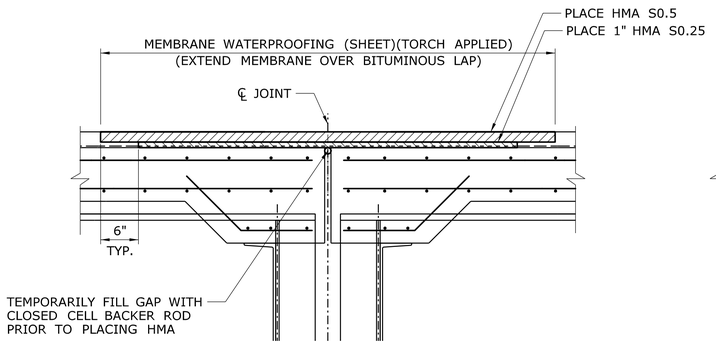

INTERMEDIATE CONDITION

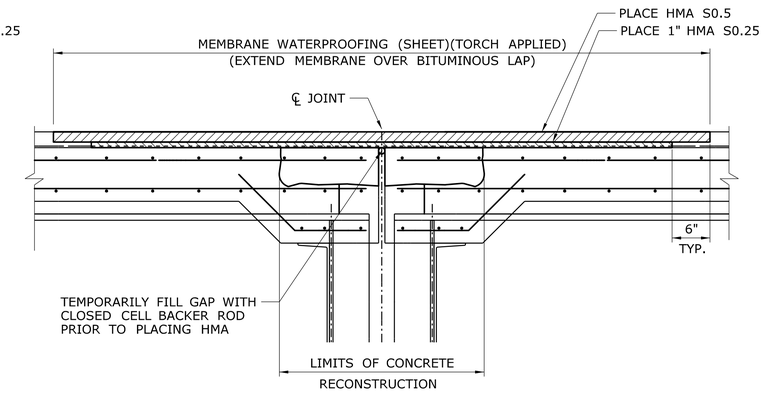

INTERMEDIATE CONDITION

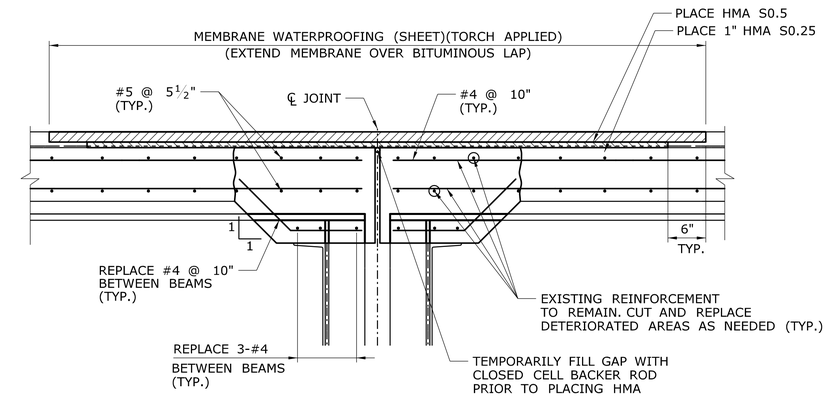

INTERMEDIATE CONDITION

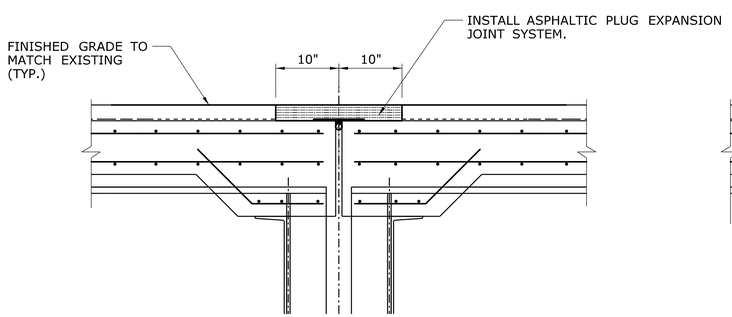

FINAL CONDITION

JOINT REPLACEMENT AT PIER W.B.

SECTION D / S-16

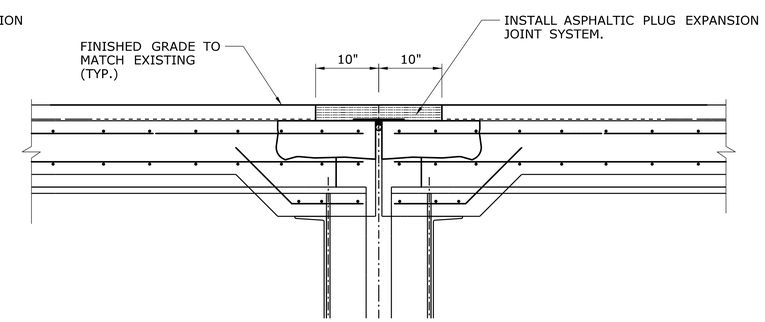

FINAL CONDITION

JOINT REPLACEMENT AT PIER E.B.

SECTION E / S-16

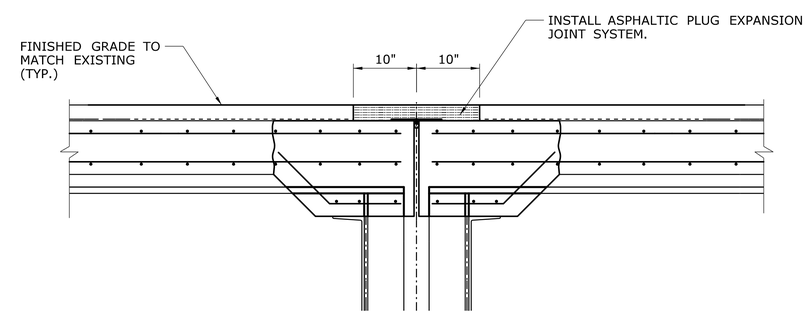

FINAL CONDITION

JOINT REPLACEMENT AT PIER E.B.

BETWEEN GIRDERS G21 AND G22

SECTION F / S-16

REV.	DATE	REVISION DESCRIPTION	SHEET NO.
-	-	-	-
-	-	-	-
-	-	-	-
-	-	-	-
-	-	-	-
-	-	-	-

THE INFORMATION, INCLUDING ESTIMATED QUANTITIES OF WORK, SHOWN ON THESE SHEETS IS BASED ON LIMITED INVESTIGATIONS BY THE STATE AND IS IN NO WAY WARRANTED TO INDICATE THE CONDITIONS OF ACTUAL QUANTITIES OF WORK WHICH WILL BE REQUIRED.

Plotted Date: 7/2/2013

DESIGNER/DRAFTER: B.A./M.G.
CHECKED BY: J.H.M. II
SCALE: 1" = 1'-0"

STATE OF CONNECTICUT
DEPARTMENT OF TRANSPORTATION

Filename: ...\SB_MSH_7_Br00818_171_367_S_18_JOINT.dgn

SIGNATURE/BLOCK:
Close, Jensen and Miller, P.C.
1137 Silas Deane Highway
Wethersfield, CT 06109

PROJECT TITLE:
REPLACEMENT OF EXPANSION JOINTS IN DISTRICT 1

TOWN: **EAST HARTFORD**

DRAWING TITLE: **JOINT DETAILS - 2 BRIDGE NO. 00818**

PROJECT NO. 171-367
DRAWING NO. S-18
SHEET NO. 03.18

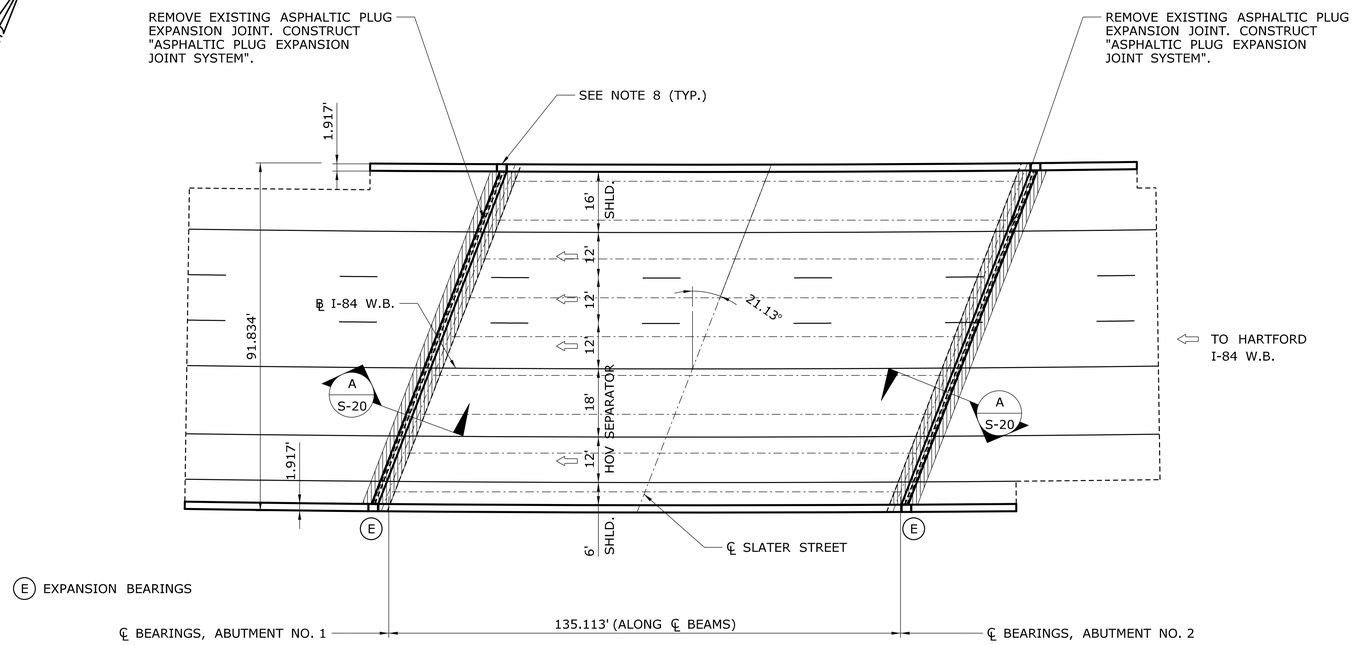

PLAN BRIDGE NO. 05443, SITE NO. 8
I-84 W.B. OVER SLATER STREET

SCALE: 1" = 20'

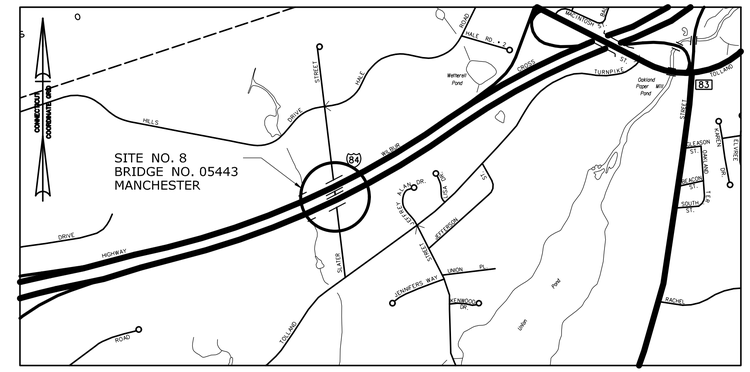

LOCATION PLAN - SITE NO. 8

SCALE: 1" = 1000'

NOTES:

1. ALL WORK TO SAWCUT BITUMINOUS PAVEMENT, REMOVE AND DISPOSE OF BITUMINOUS CONCRETE, MEMBRANE WATERPROOFING, EXISTING JOINT COMPONENTS AND SEALING ELEMENTS, EXCLUDING THE REMOVAL OF PORTLAND CEMENT CONCRETE HEADERS SHALL BE INCLUDED IN THE COST OF THE APPROPRIATE JOINT SYSTEM (SEE SPECIAL PROVISIONS).

2. ALL WORK INVOLVING REMOVAL AND RECONSTRUCTION OF CONCRETE, INCLUDING CONCRETE HEADERS, DECK SLABS, APPROACH SLABS, HAUNCHES, SIDEWALKS, AND PARAPETS, AS SHOWN ON THE PLANS, SHALL BE PAID UNDER THE ITEM "CONSTRUCT CONCRETE HEADERS".

3. THE CONCRETE SHALL BE CHIPPED OUT TO A SOUND SURFACE WITHIN THE LIMITS AS DESCRIBED ON THE PLANS. EXTREME CARE SHALL BE TAKEN WHERE REINFORCING STEEL IS UNCOVERED NOT TO DAMAGE THE STEEL OR ITS BOND IN THE SURROUNDING CONCRETE.

4. ALL EXPOSED REINFORCING STEEL SHALL BE THOROUGHLY CLEANED AND REUSED. THE EXISTING REINFORCING SHALL BE REPLACED WHEN:
   - EXISTING REBAR HAS LOST 25% OR MORE OF THE ORIGINAL CROSS SECTIONAL AREA.
   - EXISTING REBAR IS BROKEN.
   - AS ORDERED BY THE ENGINEER.

5. THE REMOVED AREAS SHALL BE FILLED AND FINISHED WITH FAST SETTING CONCRETE AND MATCH EXISTING GRADES.

6. WHERE EXISTING BRIDGE DECK JOINTS ARE CONCEALED BENEATH BITUMINOUS CONCRETE OVERLAY THE CONTRACTOR SHALL VERIFY THE BRIDGE DECK JOINT LOCATION AND HAVE THE LIMITS OF SAW-CUTTING APPROVED BY THE ENGINEER.

7. MEMBRANE WATERPROOFING SHALL BE "MEMBRANE WATERPROOFING (SHEET)(TORCH APPLIED)" AND SHALL BE PLACED PRIOR TO PLACEMENT OF HMA S0.25. THE CONTRACTOR MAY MASK OFF THE LIMITS OF THE PROPOSED HEADERS WHEN CONSTRUCTION THE HEADERS AS APPROVED BY THE ENGINEER.

8. FOR PARAPET JOINT TREATMENT DETAILS, SEE DRAWING NO. S-02.

9. PAVEMENT MARKINGS SUCH AS 4" WHITE, 4" YELLOW, 6" WHITE, 8" WHITE, AND SYMBOLS AND LEGENDS THAT MAY BE REMOVED AS A RESULT OF CONSTRUCTION SHALL BE REPLACED WITH SIMILAR EPOXY RESIN PAVEMENT MARKINGS. THE COST OF THIS WORK SHALL BE INCLUDED IN THE GENERAL COST OF CONSTRUCTION.

ASPHALTIC PLUG DESIGN THERMAL MOVEMENT

THE DESIGN THERMAL MOVEMENT AT ABUTMENT NO. 1 IS 1.24".
THE DESIGN THERMAL MOVEMENT AT ABUTMENT NO. 2 IS 1.24".

REV.	DATE	REVISION DESCRIPTION	SHEET NO.
-	-	-	-
-	-	-	-
-	-	-	-
-	-	-	-
-	-	-	-
-	-	-	-

THE INFORMATION, INCLUDING ESTIMATED QUANTITIES OF WORK, SHOWN ON THESE SHEETS IS BASED ON LIMITED INVESTIGATIONS BY THE STATE AND IS IN NO WAY WARRANTED TO INDICATE THE CONDITIONS OF ACTUAL QUANTITIES OF WORK WHICH WILL BE REQUIRED.

Plotted Date: 7/2/2013

DESIGNER/DRAFTER: B.A./M.G.
CHECKED BY: J.H.M. II
SCALE AS NOTED

STATE OF CONNECTICUT
DEPARTMENT OF TRANSPORTATION

Filename: ...\SB_MSH_8_Br05443_171_367_S_19_GPN.dgn

SIGNATURE/BLOCK:
Close, Jensen and Miller, P.C.
1137 Silas Deane Highway
Wethersfield, CT 06109

PROJECT TITLE: REPLACEMENT OF EXPANSION JOINTS IN DISTRICT 1

TOWN: MANCHESTER

DRAWING TITLE: GENERAL PLAN BRIDGE NO. 05443

PROJECT NO. 171-367
DRAWING NO. S-19
SHEET NO. 03.19

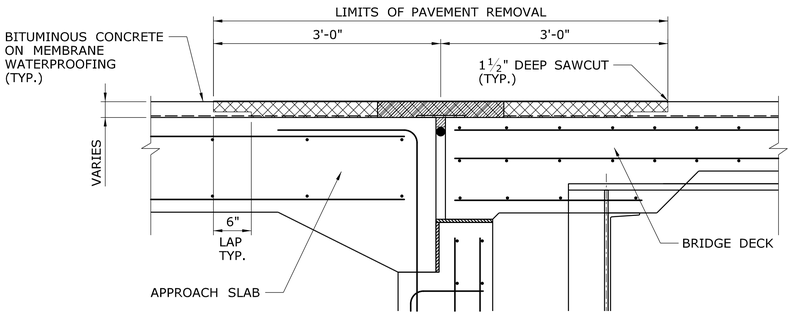

EXISTING CONDITION - LIMITS OF REMOVAL

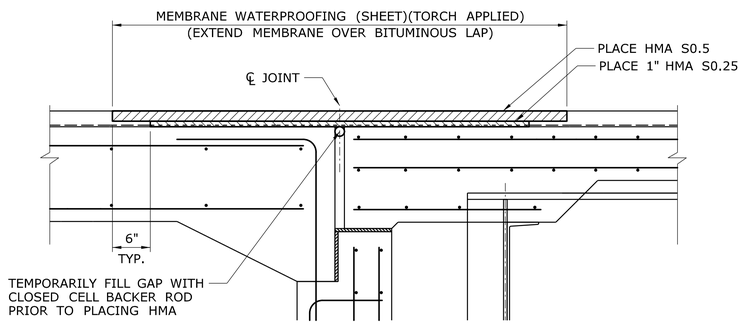

INTERMEDIATE CONDITION

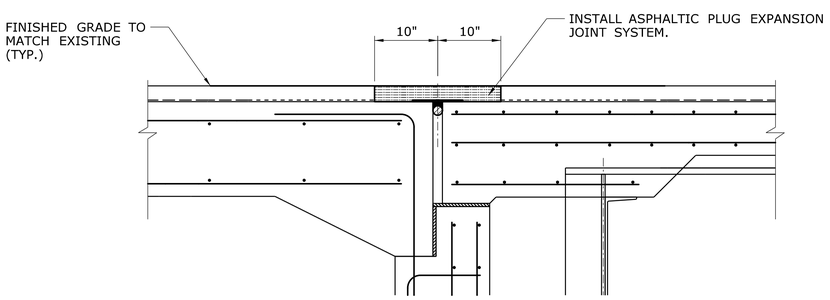

FINAL CONDITION

JOINT REPLACEMENT AT ABUTMENTS

SECTION A / S-19

REV.	DATE	REVISION DESCRIPTION	SHEET NO.
-	-	-	-
-	-	-	-
-	-	-	-
-	-	-	-
-	-	-	-
-	-	-	-

THE INFORMATION, INCLUDING ESTIMATED QUANTITIES OF WORK, SHOWN ON THESE SHEETS IS BASED ON LIMITED INVESTIGATIONS BY THE STATE AND IS IN NO WAY WARRANTED TO INDICATE THE CONDITIONS OF ACTUAL QUANTITIES OF WORK WHICH WILL BE REQUIRED.

Plotted Date: 7/2/2013

DESIGNER/DRAFTER: **B.A./M.G.**

CHECKED BY: **J.H.M. II**

SCALE: 1" = 1'-0"

STATE OF CONNECTICUT
DEPARTMENT OF TRANSPORTATION

Filename: ...\SB..MSH..8..Br05443..171..367..S..20..JOINT.dgn

SIGNATURE/ BLOCK:

Close, Jensen and Miller, P.C.
1137 Silas Deane Highway
Wethersfield, CT 06109

PROJECT TITLE:

REPLACEMENT OF EXPANSION JOINTS IN DISTRICT 1

TOWN: **MANCHESTER**

DRAWING TITLE: **JOINT DETAILS BRIDGE NO. 05443**

PROJECT NO. **171-367**

DRAWING NO. **S-20**

SHEET NO. **03.20**

STRIP SEAL EXPANSION JOINT OPENING TABLE

INSTALL TEMP. DEG. F°	PERPENDICULAR JOINT OPENING (IN.)
40°	3.79
50°	3.52
60°	3.25
70°	2.98
80°	2.71
90°	2.44

AT PIER 3

NOTES

1. ALL WORK TO SAWCUT BITUMINOUS PAVEMENT, REMOVE AND DISPOSE OF BITUMINOUS CONCRETE, MEMBRANE WATERPROOFING, EXISTING JOINT COMPONENTS AND SEALING ELEMENTS SHALL BE INCLUDED IN THE COST OF THE APPROPRIATE JOINT SYSTEM (SEE SPECIAL PROVISIONS).
2. REMOVAL AND RECONSTRUCTION OF CONCRETE TO PROVIDE A BLOCK OUT ENVELOPE IN DECK, CURB, AND PARAPET SHALL BE PAID UNDER THE ITEM "STRIP SEAL EXPANSION JOINT SYSTEM FOR REHABILITATION PROJECTS".
3. THE CONCRETE SHALL BE CHIPPED OUT TO A SOUND SURFACE WITHIN THE LIMITS AS DESCRIBED ON THE PLANS. EXTREME CARE SHALL BE TAKEN WHERE REINFORCING STEEL IS UNCOVERED NOT TO DAMAGE THE STEEL OR ITS BOND IN THE SURROUNDING CONCRETE.
4. ALL EXPOSED REINFORCING STEEL SHALL BE THOROUGHLY CLEANED AND REUSED. THE EXISTING REINFORCING SHALL BE REPLACED WHEN:
   - EXISTING REBAR HAS LOST 25% OR MORE OF THE ORIGINAL CROSS SECTIONAL AREA.
   - EXISTING REBAR IS BROKEN.
   - AS ORDERED BY THE ENGINEER.
5. THE REMOVED AREAS SHALL BE FILLED AND FINISHED WITH FAST SETTING CONCRETE AND MATCH EXISTING GRADES.
6. WHERE EXISTING BRIDGE DECK JOINTS ARE CONCEALED BENEATH BITUMINOUS CONCRETE OVERLAY THE CONTRACTOR SHALL VERIFY THE BRIDGE DECK JOINT LOCATION AND HAVE THE LIMITS OF SAW-CUTTING APPROVED BY THE ENGINEER.
7. MEMBRANE WATERPROOFING SHALL BE "MEMBRANE WATERPROOFING (SHEET)(TORCH APPLIED)" AND SHALL BE PLACED PRIOR TO PLACEMENT OF HMA S0.25. THE CONTRACTOR MAY MASK OFF THE LIMITS OF THE PROPOSED HEADERS WHEN CONSTRUCTION THE HEADERS AS APPROVED BY THE ENGINEER.
8. SEAL THE JOINT BETWEEN PARAPET AND ABUTTING CURB AT THE NE, NW, AND SW CORNERS OF THE BRIDGE, SEAL THE JOINT BETWEEN THE PARAPET AND THE WINGWALL AT THE SE CORNER OF THE BRIDGE (SEE SHEET S-02).
9. PAVEMENT MARKINGS SUCH AS 4" WHITE, 4" YELLOW, 6" WHITE, 8" WHITE, AND SYMBOLS AND LEGENDS THAT MAY BE REMOVED AS A RESULT OF CONSTRUCTION SHALL BE REPLACED WITH SIMILAR EPOXY RESIN PAVEMENT MARKINGS. THE COST OF THIS WORK SHALL BE INCLUDED IN THE GENERAL COST OF CONSTRUCTION.

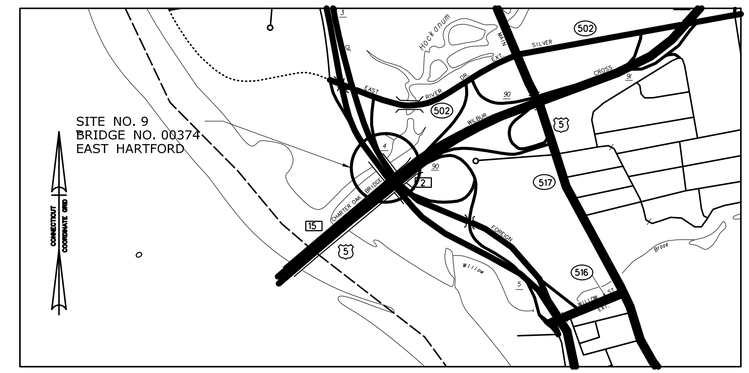

LOCATION PLAN - SITE NO. 9

SCALE: 1" = 1000'

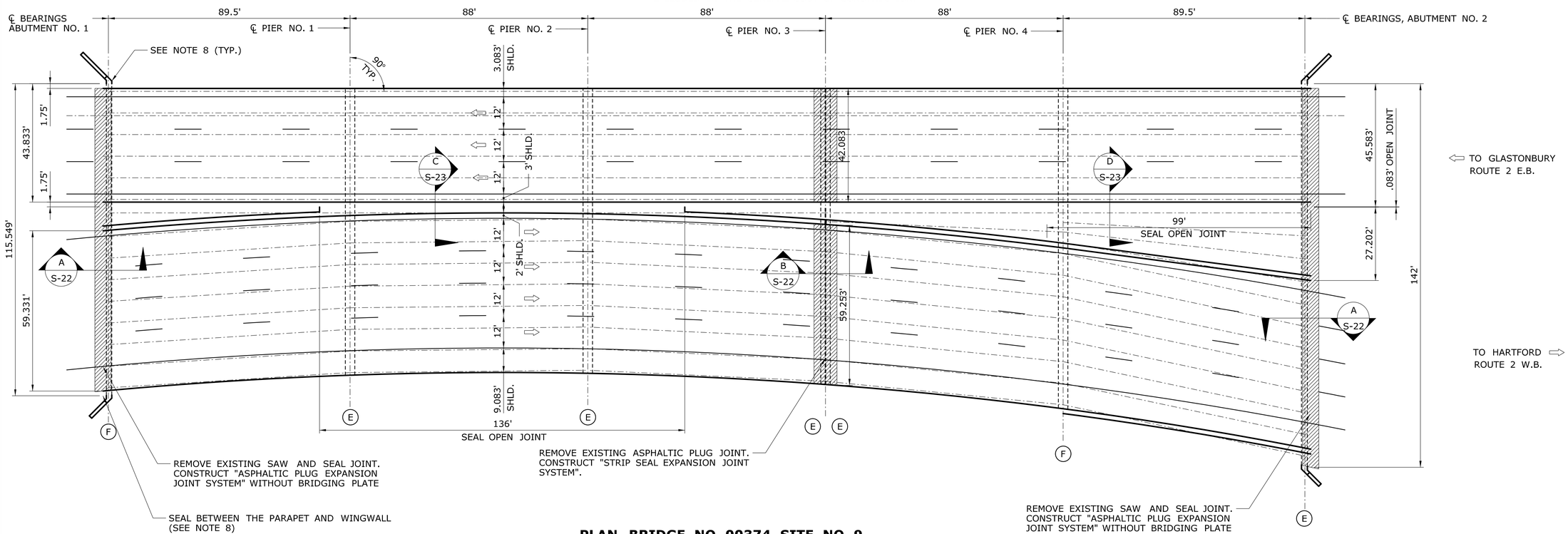

PLAN BRIDGE NO. 00374, SITE NO. 9

ROUTE 2 OVER HOCKANUM RIVER

SCALE: 1" = 20'

(F) FIXED BEARINGS

(E) EXPANSION BEARINGS

ASPHALTIC PLUG DESIGN THERMAL MOVEMENT

THE DESIGN THERMAL MOVEMENT AT ABUTMENT NO. 1 IS 0".
THE DESIGN THERMAL MOVEMENT AT ABUTMENT NO. 2 IS 0.80".

REV.	DATE	REVISION DESCRIPTION	SHEET NO.
-	-	-	-
-	-	-	-
-	-	-	-
-	-	-	-
-	-	-	-
-	-	-	-

THE INFORMATION, INCLUDING ESTIMATED QUANTITIES OF WORK, SHOWN ON THESE SHEETS IS BASED ON LIMITED INVESTIGATIONS BY THE STATE AND IS IN NO WAY WARRANTED TO INDICATE THE CONDITIONS OF ACTUAL QUANTITIES OF WORK WHICH WILL BE REQUIRED.

Plotted Date: 7/2/2013

DESIGNER/DRAFTER: B.A./M.G.
CHECKED BY: J.H.M. II
SCALE AS NOTED

STATE OF CONNECTICUT
DEPARTMENT OF TRANSPORTATION

Filename: ...\SB_MSH_9_Br00374_171_367_S_21_GPN.dgn

SIGNATURE/BLOCK:
Close, Jensen and Miller, P.C.
1137 Silas Deane Highway
Wethersfield, CT 06109

PROJECT TITLE: REPLACEMENT OF EXPANSION JOINTS IN DISTRICT 1

TOWN: EAST HARTFORD

DRAWING TITLE: GENERAL PLAN BRIDGE NO. 00374

PROJECT NO. 171-367
DRAWING NO. S-21
SHEET NO. 03.21

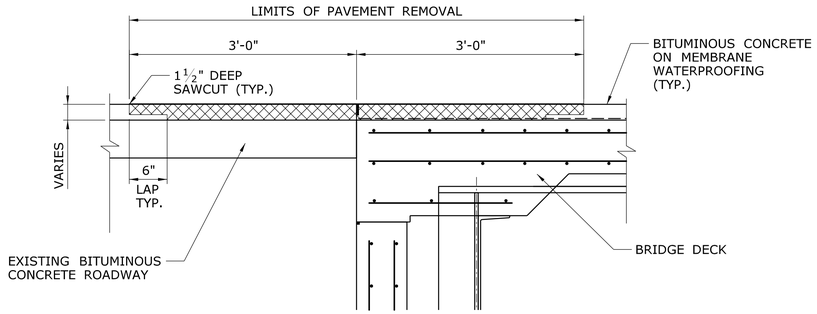

EXISTING CONDITION - LIMITS OF REMOVAL

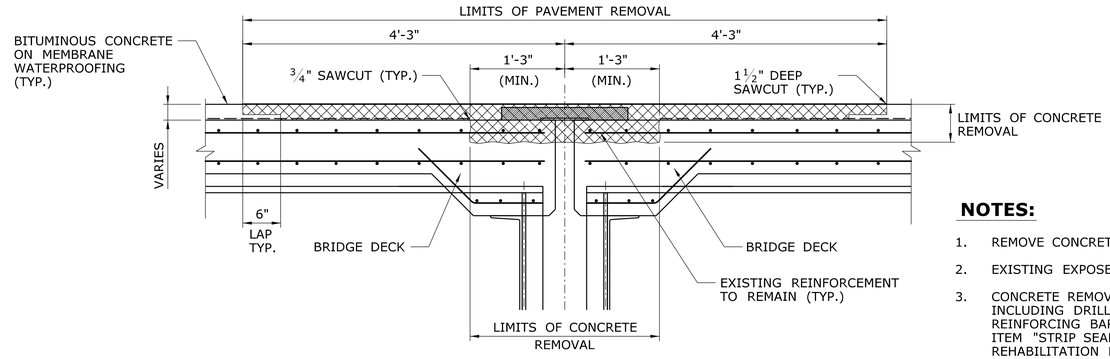

EXISTING CONDITION - LIMITS OF REMOVAL

NOTES:

1. REMOVE CONCRETE HEADER TO THE LIMITS SHOWN.
2. EXISTING EXPOSED REINFORCEMENT TO REMAIN.
3. CONCRETE REMOVAL AND RECONSTRUCTION WORK, INCLUDING DRILLING AND GROUTING #5 GALVANIZED REINFORCING BARS SHALL BE PAID FOR UNDER THE ITEM "STRIP SEAL EXPANSION JOINT SYSTEM FOR REHABILITATION PROJECTS" (SEE SPECIAL PROVISION).

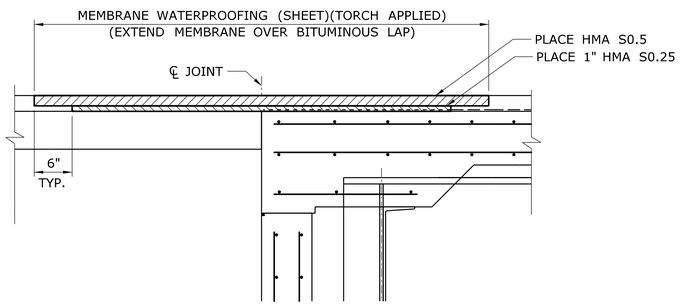

INTERMEDIATE CONDITION

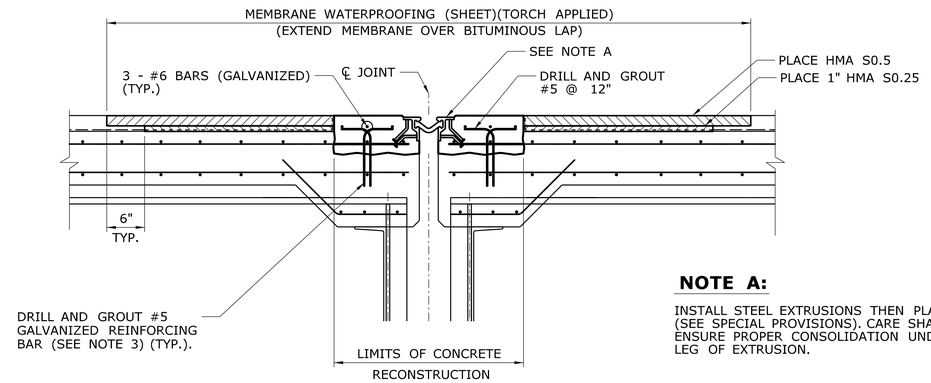

INTERMEDIATE CONDITION

NOTE A:

INSTALL STEEL EXTRUSIONS THEN PLACE CONCRETE (SEE SPECIAL PROVISIONS). CARE SHALL BE TAKEN TO ENSURE PROPER CONSOLIDATION UNDER HORIZONTAL LEG OF EXTRUSION.

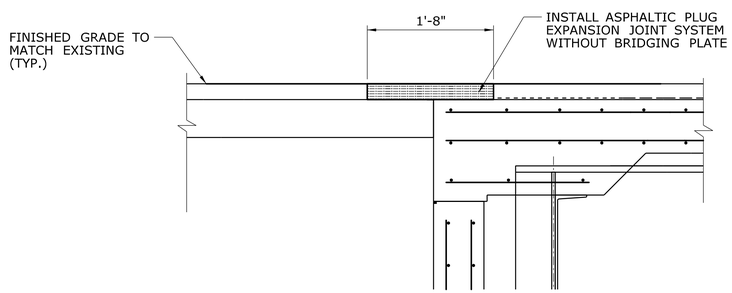

FINAL CONDITION

JOINT REPLACEMENT AT ABUTMENTS

SECTION A / S-21

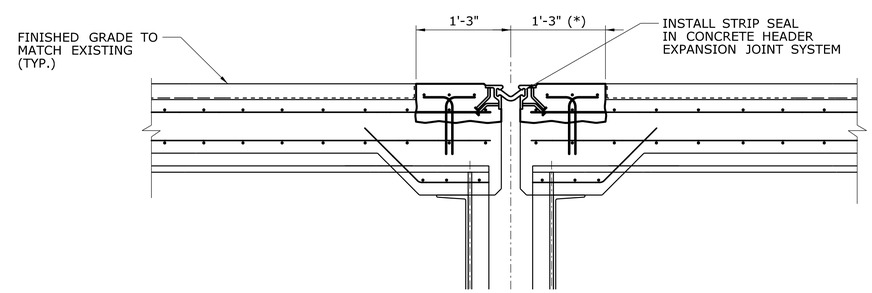

(*) FIELD ADJUST TO MATCH EXISTING SCUPPER HEADER (E.B.)

FINAL CONDITION

JOINT REPLACEMENT AT PIER NO. 3

SECTION B / S-21

REV.	DATE	REVISION DESCRIPTION	SHEET NO.
-	-	-	-
-	-	-	-
-	-	-	-
-	-	-	-
-	-	-	-
-	-	-	-

THE INFORMATION, INCLUDING ESTIMATED QUANTITIES OF WORK, SHOWN ON THESE SHEETS IS BASED ON LIMITED INVESTIGATIONS BY THE STATE AND IS IN NO WAY WARRANTED TO INDICATE THE CONDITIONS OF ACTUAL QUANTITIES OF WORK WHICH WILL BE REQUIRED.

Plotted Date: 7/2/2013

DESIGNER/DRAFTER: B.A./M.G.
CHECKED BY: J.H.M. II
SCALE: 1" = 1'-0"

STATE OF CONNECTICUT
DEPARTMENT OF TRANSPORTATION

Filename: ...\SB_MSH_9_Br00374_171_367_S_22_JOINT.dgn

SIGNATURE/BLOCK:
Close, Jensen and Miller, P.C.
1137 Silas Deane Highway
Wethersfield, CT 06109

PROJECT TITLE: REPLACEMENT OF EXPANSION JOINTS IN DISTRICT 1

TOWN: EAST HARTFORD

DRAWING TITLE: JOINT DETAILS - 1
BRIDGE NO. 00374

PROJECT NO. 171-367
DRAWING NO. S-22
SHEET NO. 03.22

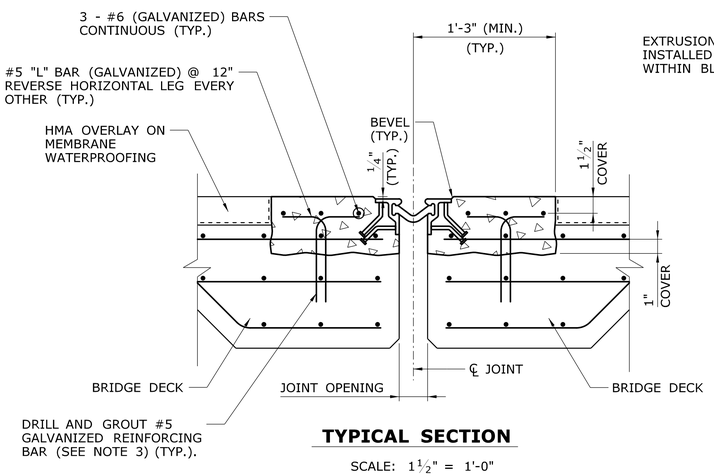

TYPICAL SECTION

SCALE: 1 1/2" = 1'-0"

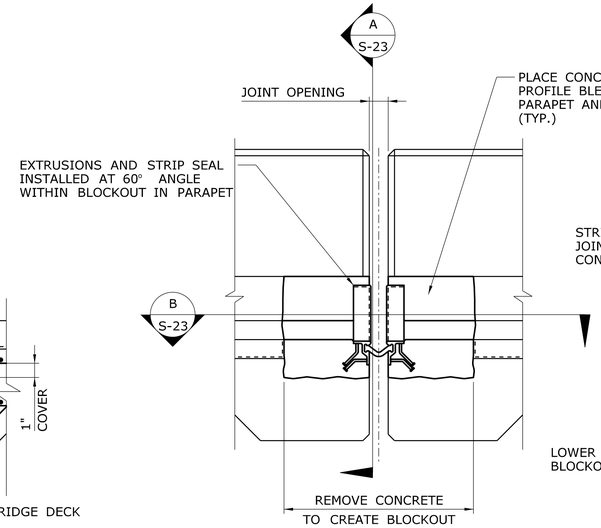

ELEVATION

SCALE: 1" = 1'-0"

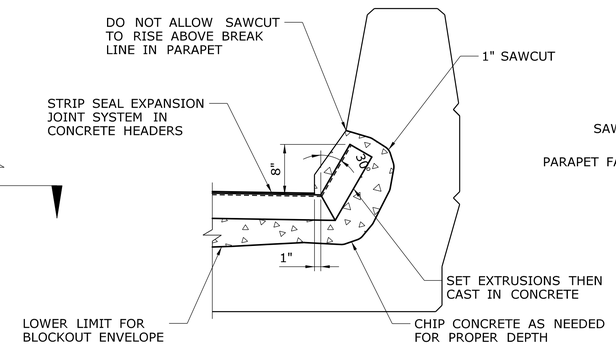

SECTION AT PARAPET

SCALE: 1" = 1'-0"

SECTION A / S-23

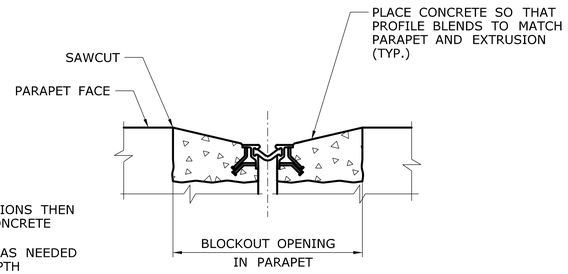

SECTION AT PARAPET

SCALE: 1" = 1'-0"

SECTION B / S-23

NOTES

1. REMOVE NEW HMA OVERLAY AND MEMBRANE WATERPROOFING. REPLACE WITH STRIP SEAL IN CONCRETE HEADER EXPANSION JOINT SYSTEM. TO BE PAID FOR UNDER THE ITEM "STRIP SEAL EXPANSION JOINT SYSTEM FOR REHABILITATION PROJECTS".
2. IF EXISTING REINFORCEMENT IS ENCOUNTERED DURING DRILLING, THE HOLE SHALL BE ABANDONED, FILLED WITH NON-SHRINK GROUT OR CHEMICAL ADHESIVE AND RELOCATED AS DIRECTED BY THE ENGINEER.
3. ℄ DRILLED HOLE FOR CHEMICALLY ANCHORED #5 (GALVANIZED). DEPTH AND DIAMETER OF HOLE TO BE AS REQUIRED BY CHEMICAL ADHESIVE MANUFACTURER TO DEVELOP THE FULL STRENGTH OF THE BAR. THIS WORK TO BE INCLUDED FOR PAYMENT UNDER THE ITEM "STRIP SEAL EXPANSION JOINT SYSTEM FOR REHABILITATION PROJECTS".
4. PARAPET RECONSTRUCTION WORK SHALL BE PAID FOR UNDER THE ITEM "STRIP SEAL EXPANSION JOINT SYSTEM FOR REHABILITATION PROJECTS".

STRIP SEAL EXPANSION JOINT SYSTEM FOR REHABILITATION PROJECT

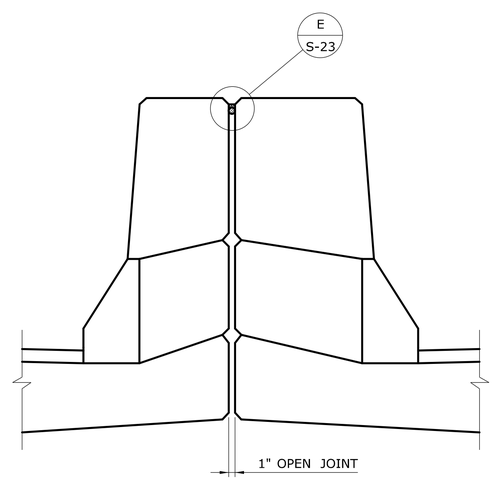

SECTION C / S-21

SCALE: 1" = 1'-0"

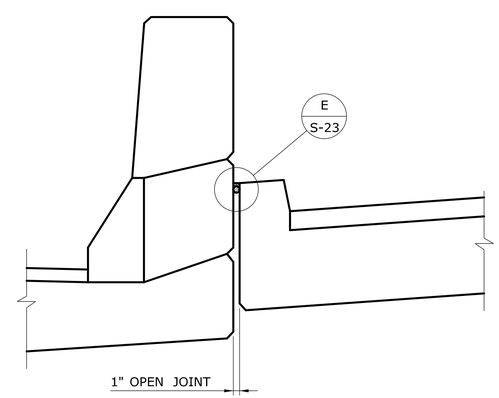

SECTION D / S-21

SCALE: 1" = 1'-0"

OPEN JOINT SEALING DETAILS

PAID AS "CLEAN AND RESEAL EXISTING FILLED BRIDGE JOINTS"

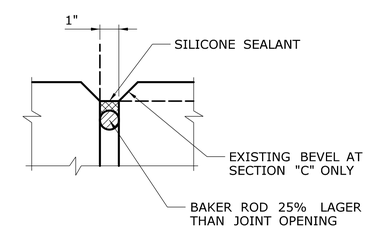

DETAIL E / S-23

SCALE: 3" = 1'-0"

CLEAN AND RESEAL EXISTING FILLED BRIDGE JOINTS

NOTES:

1. SILICONE SEALANT AND BAKER ROD TO BE PAID UNDER "CLEAN AND RESEAL EXISTING FILLED BRIDGE JOINTS".
2. THE BAKER ROD SHALL BE COMPRISED OF CLOSED CELL EXPANDED POLYETHYLENE FOAM, COMPATIBLE WITH COLD APPLIED SEALS UNLESS OTHERWISE APPROVED.

REV.	DATE	REVISION DESCRIPTION	SHEET NO.
-	-	-	-
-	-	-	-
-	-	-	-
-	-	-	-
-	-	-	-
-	-	-	-

THE INFORMATION, INCLUDING ESTIMATED QUANTITIES OF WORK, SHOWN ON THESE SHEETS IS BASED ON LIMITED INVESTIGATIONS BY THE STATE AND IS IN NO WAY WARRANTED TO INDICATE THE CONDITIONS OF ACTUAL QUANTITIES OF WORK WHICH WILL BE REQUIRED.

Plotted Date: 7/2/2013

DESIGNER/DRAFTER: B.A./M.G.
CHECKED BY: J.H.M. II
SCALE AS NOTED

STATE OF CONNECTICUT
DEPARTMENT OF TRANSPORTATION

Filename: ...\SB_MSH_9_Br00374_171_367_S_23_JOINT.dgn

SIGNATURE/BLOCK:
Close, Jensen and Miller, P.C.
1137 Silas Deane Highway
Wethersfield, CT 06109

PROJECT TITLE: REPLACEMENT OF EXPANSION JOINTS IN DISTRICT 1

TOWN: EAST HARTFORD

DRAWING TITLE: JOINT DETAILS - 2
BRIDGE NO. 00374

PROJECT NO. 171-367
DRAWING NO. S-23
SHEET NO. 03.23

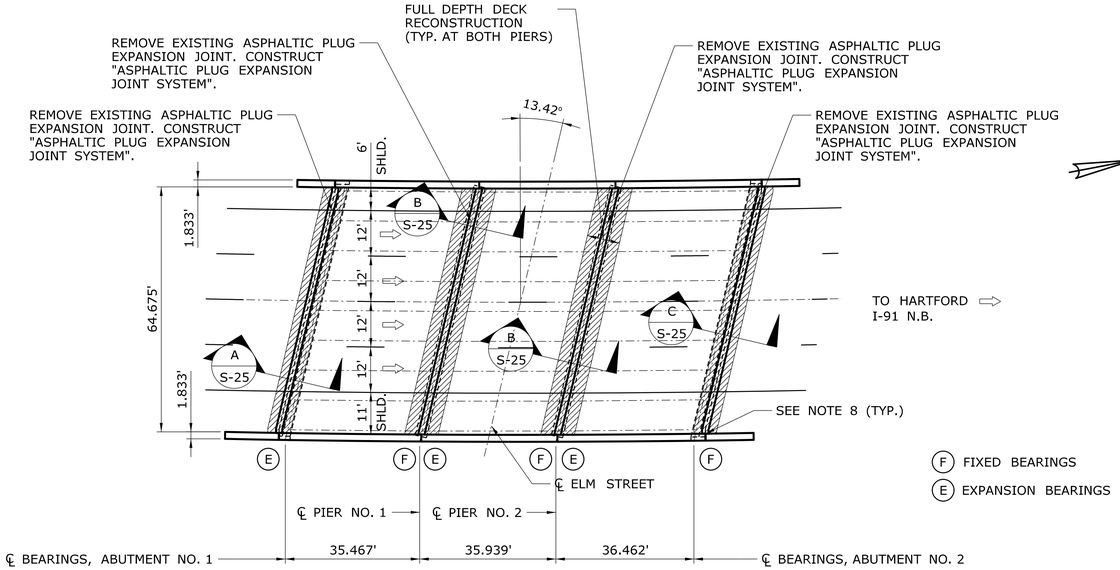

PLAN BRIDGE NO. 01456, SITE NO. 10
I-91 NORTHBOUND OVER ELM STREET

SCALE: 1" = 20'

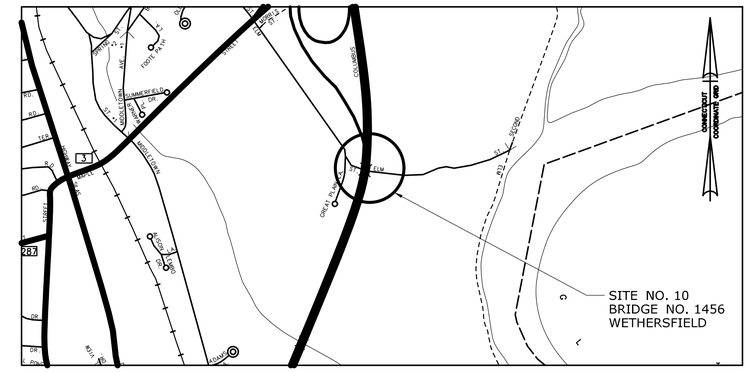

LOCATION PLAN - SITE NO 10

SCALE: 1" = 1000'

NOTES:

1. ALL WORK TO SAWCUT BITUMINOUS PAVEMENT, REMOVE AND DISPOSE OF BITUMINOUS CONCRETE, MEMBRANE WATERPROOFING, EXISTING JOINT COMPONENTS AND SEALING ELEMENTS, EXCLUDING THE REMOVAL OF PORTLAND CEMENT CONCRETE HEADERS SHALL BE INCLUDED IN THE COST OF THE APPROPRIATE JOINT SYSTEM (SEE SPECIAL PROVISIONS).

2. ALL WORK INVOLVING REMOVAL AND RECONSTRUCTION OF CONCRETE, INCLUDING CONCRETE HEADERS, DECK SLABS, APPROACH SLABS, HAUNCHES, SIDEWALKS, AND PARAPETS, AS SHOWN ON THE PLANS, SHALL BE PAID UNDER THE ITEM "CONSTRUCT CONCRETE HEADERS".

3. THE CONCRETE SHALL BE CHIPPED OUT TO A SOUND SURFACE WITHIN THE LIMITS AS DESCRIBED ON THE PLANS. EXTREME CARE SHALL BE TAKEN WHERE REINFORCING STEEL IS UNCOVERED NOT TO DAMAGE THE STEEL OR ITS BOND IN THE SURROUNDING CONCRETE.

4. ALL EXPOSED REINFORCING STEEL SHALL BE THOROUGHLY CLEANED AND REUSED. THE EXISTING REINFORCING SHALL BE REPLACED WHEN:
   - EXISTING REBAR HAS LOST 25% OR MORE OF THE ORIGINAL CROSS SECTIONAL AREA.
   - EXISTING REBAR IS BROKEN.
   - AS ORDERED BY THE ENGINEER.

5. THE REMOVED AREAS SHALL BE FILLED AND FINISHED WITH FAST SETTING CONCRETE AND MATCH EXISTING GRADES.

6. WHERE EXISTING BRIDGE DECK JOINTS ARE CONCEALED BENEATH BITUMINOUS CONCRETE OVERLAY THE CONTRACTOR SHALL VERIFY THE BRIDGE DECK JOINT LOCATION AND HAVE THE LIMITS OF SAW-CUTTING APPROVED BY THE ENGINEER.

7. MEMBRANE WATERPROOFING SHALL BE "MEMBRANE WATERPROOFING (SHEET)(TORCH APPLIED)" AND SHALL BE PLACED PRIOR TO PLACEMENT OF HMA S0.25. THE CONTRACTOR MAY MASK OFF THE LIMITS OF THE PROPOSED HEADERS WHEN CONSTRUCTION THE HEADERS AS APPROVED BY THE ENGINEER.

8. FOR PARAPET JOINT TREATMENT DETAILS, SEE DRAWING NO. S-02.

9. PAVEMENT MARKINGS SUCH AS 4" WHITE, 4" YELLOW, 6" WHITE, 8" WHITE, AND SYMBOLS AND LEGENDS THAT MAY BE REMOVED AS A RESULT OF CONSTRUCTION SHALL BE REPLACED WITH SIMILAR EPOXY RESIN PAVEMENT MARKINGS. THE COST OF THIS WORK SHALL BE INCLUDED IN THE GENERAL COST OF CONSTRUCTION.

ASPHALTIC PLUG DESIGN THERMAL MOVEMENT

THE DESIGN THERMAL MOVEMENT AT ABUTMENT NO. 1 IS 0.33".
THE DESIGN THERMAL MOVEMENT AT PIER NO. 1 IS 0.33".
THE DESIGN THERMAL MOVEMENT AT PIER NO. 2 IS 0.33".
THE DESIGN THERMAL MOVEMENT AT ABUTMENT NO. 2 IS 0".

REV.	DATE	REVISION DESCRIPTION	SHEET NO.
-	-	-	-
-	-	-	-
-	-	-	-
-	-	-	-
-	-	-	-
-	-	-	-

THE INFORMATION, INCLUDING ESTIMATED QUANTITIES OF WORK, SHOWN ON THESE SHEETS IS BASED ON LIMITED INVESTIGATIONS BY THE STATE AND IS IN NO WAY WARRANTED TO INDICATE THE CONDITIONS OF ACTUAL QUANTITIES OF WORK WHICH WILL BE REQUIRED.

Plotted Date: 7/3/2013

DESIGNER/DRAFTER: B.A./M.G.
CHECKED BY: J.H.M. II
SCALE AS NOTED

STATE OF CONNECTICUT
DEPARTMENT OF TRANSPORTATION

Filename: ...\SB_MSH_10_Br01456_171_367_S_24_GPN.dgn

SIGNATURE/BLOCK:
Close, Jensen and Miller, P.C.
1137 Silas Deane Highway
Wethersfield, CT 06109

PROJECT TITLE: REPLACEMENT OF EXPANSION JOINTS IN DISTRICT 1

TOWN: WETHERSFIELD

DRAWING TITLE: GENERAL PLAN BRIDGE NO. 01456

PROJECT NO. 171-367
DRAWING NO. S-24
SHEET NO. 03.24

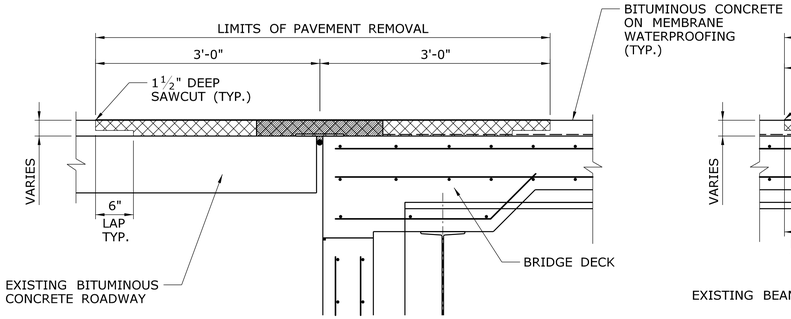

EXISTING CONDITION - LIMITS OF REMOVAL

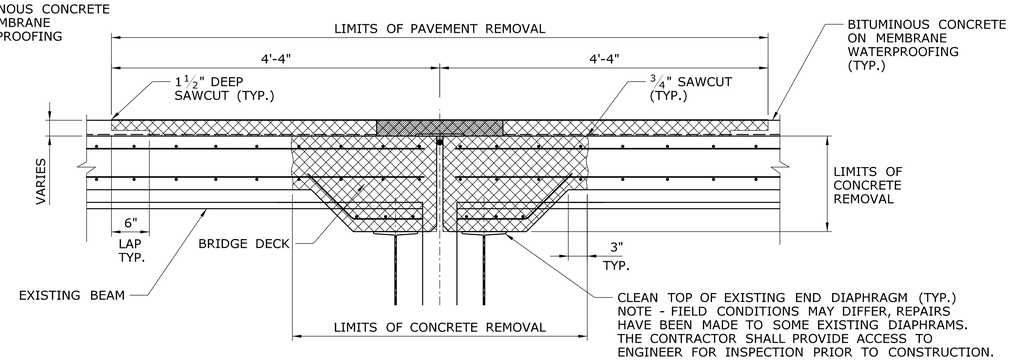

EXISTING CONDITION - LIMITS OF REMOVAL

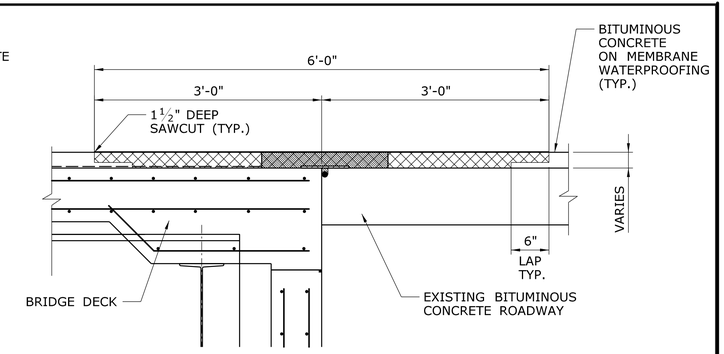

EXISTING CONDITION - LIMITS OF REMOVAL

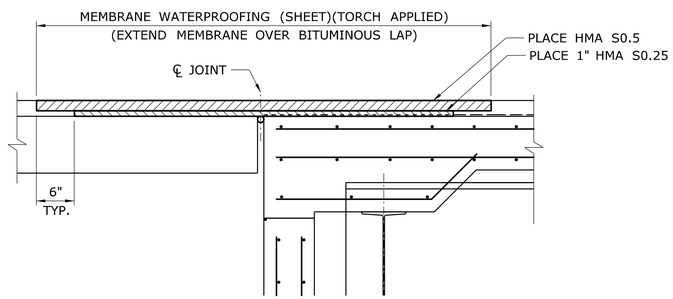

INTERMEDIATE CONDITION

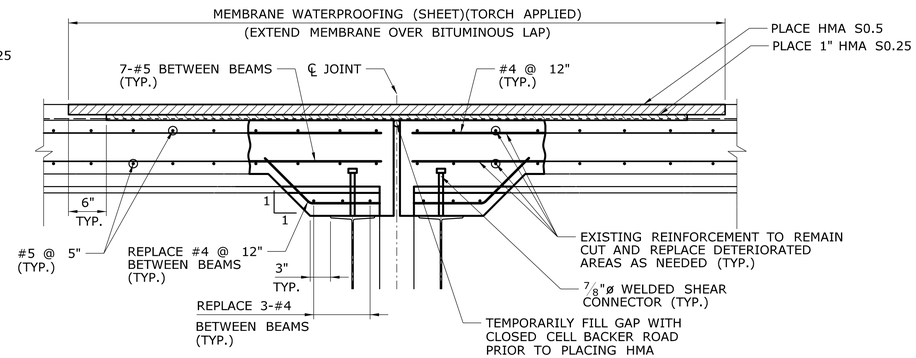

INTERMEDIATE CONDITION

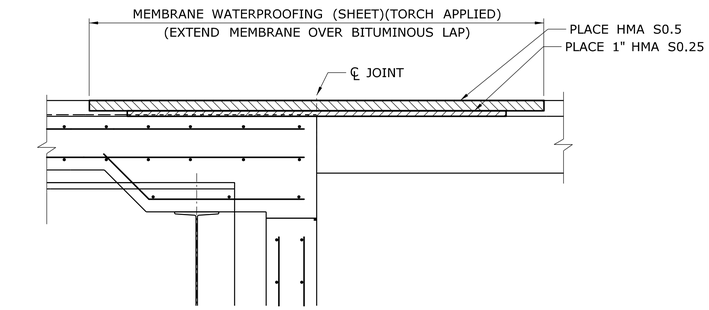

INTERMEDIATE CONDITION

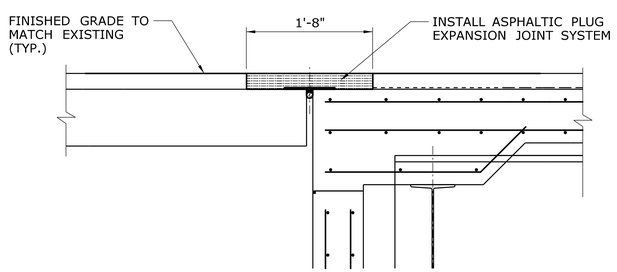

FINAL CONDITION

JOINT REPLACEMENT AT ABUTMENTS

SECTION A / S-24

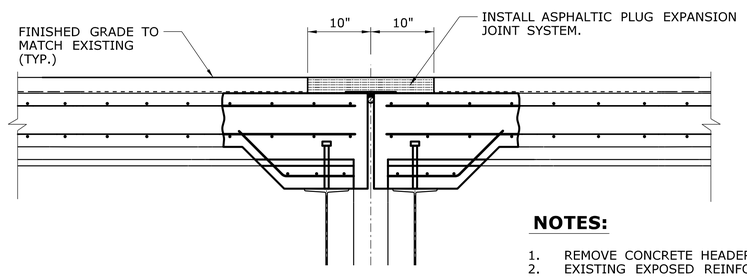

FINAL CONDITION

JOINT REPLACEMENT AT PIERS

SECTION B / S-24

NOTES:

1. REMOVE CONCRETE HEADER TO THE LIMITS SHOWN.
2. EXISTING EXPOSED REINFORCEMENT TO REMAIN.
3. SAWCUTTING, CONCRETE REMOVAL AND RECONSTRUCTION WORK INCLUDING REINFORCING BARS AND WELDED STUDS, SHALL BE PAID FOR UNDER THE ITEM "CONSTRUCT CONCRETE HEADERS" (SEE SPECIAL PROVISION).

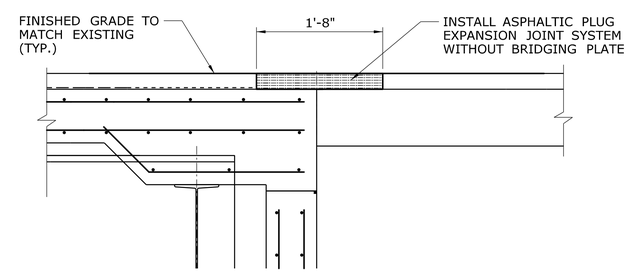

FINAL CONDITION

JOINT REPLACEMENT AT ABUTMENTS

SECTION C / S-24

REV.	DATE	REVISION DESCRIPTION	SHEET NO.
-	-	-	-
-	-	-	-
-	-	-	-
-	-	-	-
-	-	-	-
-	-	-	-

THE INFORMATION, INCLUDING ESTIMATED QUANTITIES OF WORK, SHOWN ON THESE SHEETS IS BASED ON LIMITED INVESTIGATIONS BY THE STATE AND IS IN NO WAY WARRANTED TO INDICATE THE CONDITIONS OF ACTUAL QUANTITIES OF WORK WHICH WILL BE REQUIRED.

Plotted Date: 7/2/2013

DESIGNER/DRAFTER: B.A./M.G.
CHECKED BY: J.H.M. II
SCALE: 1" = 1'-0"

STATE OF CONNECTICUT
DEPARTMENT OF TRANSPORTATION

Filename: ...\SB_MSH_10_Br01456_171_367_S_25_JOINT.dgn

SIGNATURE/BLOCK:
Close, Jensen and Miller, P.C.
1137 Silas Deane Highway
Wethersfield, CT 06109

PROJECT TITLE: REPLACEMENT OF EXPANSION JOINTS IN DISTRICT 1

TOWN: WETHERSFIELD

DRAWING TITLE: JOINT DETAILS BRIDGE NO. 01456

PROJECT NO. 171-367
DRAWING NO. S-25
SHEET NO. 03.25

PROJECT REFERENCE INFORMATION

FOR PLANS OF THE EXISTING BRIDGE SHOWING PIER LOCATIONS AND SPAN NUMBERS SEE PROJECT REFERENCE INFORMATION SHOWN ON SHEET G-3 (SEE SITE NO. 11).

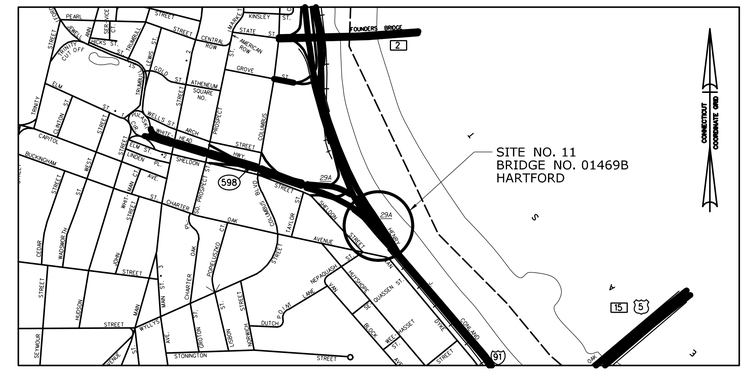

LOCATION PLAN - SITE NO. 11

SCALE: 1" = 1000'

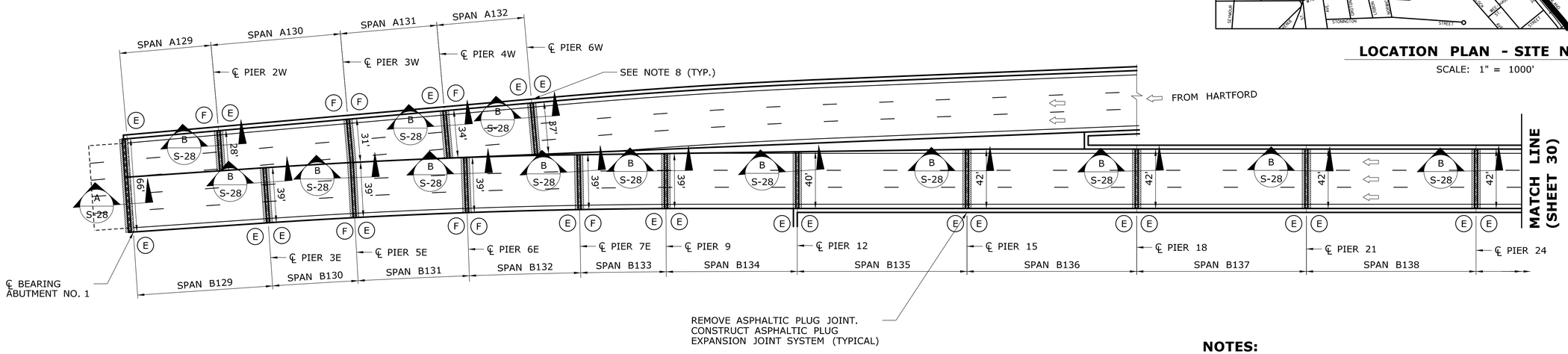

(F) FIXED BEARINGS

(E) EXPANSION BEARINGS

PLAN BRIDGE NO. 01469B, SITE NO. 11

I-91 DUTCH POINT VIADUCT

SCALE: 1" = 40'

NOTES:

1. ALL WORK TO SAWCUT BITUMINOUS PAVEMENT, REMOVE AND DISPOSE OF BITUMINOUS CONCRETE, MEMBRANE WATERPROOFING, EXISTING JOINT COMPONENTS AND SEALING ELEMENTS, EXCLUDING THE REMOVAL OF PORTLAND CEMENT CONCRETE HEADERS SHALL BE INCLUDED IN THE COST OF THE APPROPRIATE JOINT SYSTEM (SEE SPECIAL PROVISIONS).
2. ALL WORK INVOLVING REMOVAL AND RECONSTRUCTION OF CONCRETE, INCLUDING CONCRETE HEADERS, DECK SLABS, APPROACH SLABS, HAUNCHES, SIDEWALKS, AND PARAPETS, AS SHOWN ON THE PLANS, SHALL BE PAID UNDER THE ITEM "CONSTRUCT CONCRETE HEADERS".
3. THE CONCRETE SHALL BE CHIPPED OUT TO A SOUND SURFACE WITHIN THE LIMITS AS DESCRIBED ON THE PLANS. EXTREME CARE SHALL BE TAKEN WHERE REINFORCING STEEL IS UNCOVERED NOT TO DAMAGE THE STEEL OR ITS BOND IN THE SURROUNDING CONCRETE.
4. ALL EXPOSED REINFORCING STEEL SHALL BE THOROUGHLY CLEANED AND REUSED. THE EXISTING REINFORCING SHALL BE REPLACED WHEN:
   - EXISTING REBAR HAS LOST 25% OR MORE OF THE ORIGINAL CROSS SECTIONAL AREA.
   - EXISTING REBAR IS BROKEN.
   - AS ORDERED BY THE ENGINEER.
5. THE REMOVED AREAS SHALL BE FILLED AND FINISHED WITH FAST SETTING CONCRETE AND MATCH EXISTING GRADES.
6. WHERE EXISTING BRIDGE DECK JOINTS ARE CONCEALED BENEATH BITUMINOUS CONCRETE OVERLAY THE CONTRACTOR SHALL VERIFY THE BRIDGE DECK JOINT LOCATION AND HAVE THE LIMITS OF SAW-CUTTING APPROVED BY THE ENGINEER.
7. MEMBRANE WATERPROOFING SHALL BE "MEMBRANE WATERPROOFING (SHEET)(TORCH APPLIED)" AND SHALL BE PLACED PRIOR TO PLACEMENT OF HMA S0.25. THE CONTRACTOR MAY MASK OFF THE LIMITS OF THE PROPOSED HEADERS WHEN CONSTRUCTION THE HEADERS AS APPROVED BY THE ENGINEER.
8. FOR PARAPET JOINT TREATMENT DETAILS, SEE DRAWING NOS. S-02 AND S-03.
9. PAVEMENT MARKINGS SUCH AS 4" WHITE, 4" YELLOW, 6" WHITE, 8" WHITE, AND SYMBOLS AND LEGENDS THAT MAY BE REMOVED AS A RESULT OF CONSTRUCTION SHALL BE REPLACED WITH SIMILAR EPOXY RESIN PAVEMENT MARKINGS. THE COST OF THIS WORK SHALL BE INCLUDED IN THE GENERAL COST OF CONSTRUCTION.

ASPHALTIC PLUG DESIGN THERMAL MOVEMENT

THE DESIGN THERMAL MOVEMENT AT ABUTMENT NO. 1 SPAN A129 IS 0.60".
THE DESIGN THERMAL MOVEMENT AT ABUTMENT NO. 1 SPAN B129 IS 0.88".
THE DESIGN THERMAL MOVEMENT AT PIER NO. 2W IS 0.85".
THE DESIGN THERMAL MOVEMENT AT PIER NO. 3E IS 0.72".
THE DESIGN THERMAL MOVEMENT AT PIER NO. 3W IS 0".
THE DESIGN THERMAL MOVEMENT AT PIER NO. 5E IS 0.74".
THE DESIGN THERMAL MOVEMENT AT PIER NO. 4W IS 0.63".
THE DESIGN THERMAL MOVEMENT AT PIER NO. 6E IS 0".
THE DESIGN THERMAL MOVEMENT AT PIER NO. 6W IS 0.71".
THE DESIGN THERMAL MOVEMENT AT PIER NO. 7E IS 0.74".
THE DESIGN THERMAL MOVEMENT AT PIER NO. 9 IS 0.71".
THE DESIGN THERMAL MOVEMENT AT PIER NO. 12 IS 0.98".
THE DESIGN THERMAL MOVEMENT AT PIER NO. 15 IS 1.11".
THE DESIGN THERMAL MOVEMENT AT PIER NO. 18 IS 1.11".
THE DESIGN THERMAL MOVEMENT AT PIER NO. 21 IS 1.11".
THE DESIGN THERMAL MOVEMENT AT PIER NO. 24 IS 1.10".

REV.	DATE	REVISION DESCRIPTION	SHEET NO.
-	-	-	-
-	-	-	-
-	-	-	-
-	-	-	-
-	-	-	-
-	-	-	-

THE INFORMATION, INCLUDING ESTIMATED QUANTITIES OF WORK, SHOWN ON THESE SHEETS IS BASED ON LIMITED INVESTIGATIONS BY THE STATE AND IS IN NO WAY WARRANTED TO INDICATE THE CONDITIONS OF ACTUAL QUANTITIES OF WORK WHICH WILL BE REQUIRED.

Plotted Date: 7/2/2013

DESIGNER/DRAFTER: B.A./M.G.
CHECKED BY: J.H.M. II
SCALE AS NOTED

STATE OF CONNECTICUT
DEPARTMENT OF TRANSPORTATION

Filename: ...\SB_MSH_11_Br01469B_171_367_S_26_GPN-1.dgn

SIGNATURE/BLOCK:
Close, Jensen and Miller, P.C.
1137 Silas Deane Highway
Wethersfield, CT 06109

PROJECT TITLE:
REPLACEMENT OF EXPANSION JOINTS IN DISTRICT 1

TOWN: **HARTFORD**

DRAWING TITLE: **GENERAL PLAN - 1 BRIDGE NO. 01469B**

PROJECT NO. 171-367
DRAWING NO. S-26
SHEET NO. 03.26

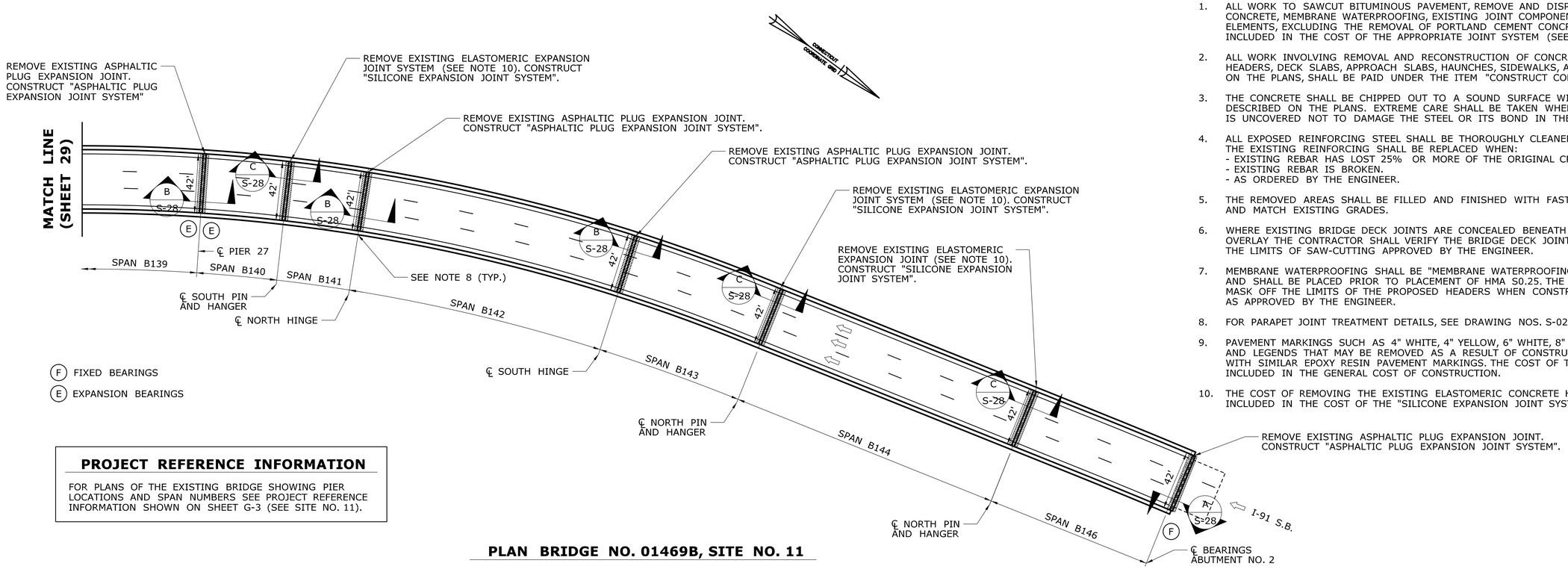

NOTES:

1. ALL WORK TO SAWCUT BITUMINOUS PAVEMENT, REMOVE AND DISPOSE OF BITUMINOUS CONCRETE, MEMBRANE WATERPROOFING, EXISTING JOINT COMPONENTS AND SEALING ELEMENTS, EXCLUDING THE REMOVAL OF PORTLAND CEMENT CONCRETE HEADERS SHALL BE INCLUDED IN THE COST OF THE APPROPRIATE JOINT SYSTEM (SEE SPECIAL PROVISIONS).
2. ALL WORK INVOLVING REMOVAL AND RECONSTRUCTION OF CONCRETE, INCLUDING CONCRETE HEADERS, DECK SLABS, APPROACH SLABS, HAUNCHES, SIDEWALKS, AND PARAPETS, AS SHOWN ON THE PLANS, SHALL BE PAID UNDER THE ITEM "CONSTRUCT CONCRETE HEADERS".
3. THE CONCRETE SHALL BE CHIPPED OUT TO A SOUND SURFACE WITHIN THE LIMITS AS DESCRIBED ON THE PLANS. EXTREME CARE SHALL BE TAKEN WHERE REINFORCING STEEL IS UNCOVERED NOT TO DAMAGE THE STEEL OR ITS BOND IN THE SURROUNDING CONCRETE.
4. ALL EXPOSED REINFORCING STEEL SHALL BE THOROUGHLY CLEANED AND REUSED. THE EXISTING REINFORCING SHALL BE REPLACED WHEN:
   - EXISTING REBAR HAS LOST 25% OR MORE OF THE ORIGINAL CROSS SECTIONAL AREA.
   - EXISTING REBAR IS BROKEN.
   - AS ORDERED BY THE ENGINEER.
5. THE REMOVED AREAS SHALL BE FILLED AND FINISHED WITH FAST SETTING CONCRETE AND MATCH EXISTING GRADES.
6. WHERE EXISTING BRIDGE DECK JOINTS ARE CONCEALED BENEATH BITUMINOUS CONCRETE OVERLAY THE CONTRACTOR SHALL VERIFY THE BRIDGE DECK JOINT LOCATION AND HAVE THE LIMITS OF SAW-CUTTING APPROVED BY THE ENGINEER.
7. MEMBRANE WATERPROOFING SHALL BE "MEMBRANE WATERPROOFING (SHEET)(TORCH APPLIED)" AND SHALL BE PLACED PRIOR TO PLACEMENT OF HMA S0.25. THE CONTRACTOR MAY MASK OFF THE LIMITS OF THE PROPOSED HEADERS WHEN CONSTRUCTION THE HEADERS AS APPROVED BY THE ENGINEER.
8. FOR PARAPET JOINT TREATMENT DETAILS, SEE DRAWING NOS. S-02 AND S-03.
9. PAVEMENT MARKINGS SUCH AS 4" WHITE, 4" YELLOW, 6" WHITE, 8" WHITE, AND SYMBOLS AND LEGENDS THAT MAY BE REMOVED AS A RESULT OF CONSTRUCTION SHALL BE REPLACED WITH SIMILAR EPOXY RESIN PAVEMENT MARKINGS. THE COST OF THIS WORK SHALL BE INCLUDED IN THE GENERAL COST OF CONSTRUCTION.
10. THE COST OF REMOVING THE EXISTING ELASTOMERIC CONCRETE HEADERS SHALL BE INCLUDED IN THE COST OF THE "SILICONE EXPANSION JOINT SYSTEM".

PROJECT REFERENCE INFORMATION

FOR PLANS OF THE EXISTING BRIDGE SHOWING PIER LOCATIONS AND SPAN NUMBERS SEE PROJECT REFERENCE INFORMATION SHOWN ON SHEET G-3 (SEE SITE NO. 11).

PLAN BRIDGE NO. 01469B, SITE NO. 11

I-91 DUTCH POINT VIADUCT

SCALE: 1" = 40'

ASPHALTIC PLUG DESIGN THERMAL MOVEMENT

THE DESIGN THERMAL MOVEMENT AT PIER NO. 27 IS 0.83".
THE DESIGN THERMAL MOVEMENT AT SPAN B141 NORTH HINGE IS 1.19".
THE DESIGN THERMAL MOVEMENT AT SPAN B143 SOUTH HINGE IS 1.44".
THE DESIGN THERMAL MOVEMENT AT ABUTMENT NO. 2 IS 0".

SILICONE EXPANSION JOINT OPENING TABLE

INSTALL TEMP. DEG. F°	PERPENDICULAR JOINT OPENING (IN.)
40°	2.09
50°	2.04
60°	1.99
70°	1.93
80°	1.88
90°	1.83

SPAN B141, SOUTH PIN AND HANGER

SILICONE EXPANSION JOINT OPENING TABLE

INSTALL TEMP. DEG. F°	PERPENDICULAR JOINT OPENING (IN.)
40°	2.22
50°	2.09
60°	1.97
70°	1.84
80°	1.72
90°	1.59

SPAN B143, NORTH PIN AND HANGER

SILICONE EXPANSION JOINT OPENING TABLE

INSTALL TEMP. DEG. F°	PERPENDICULAR JOINT OPENING (IN.)
40°	2.59
50°	2.47
60°	2.34
70°	2.22
80°	2.09
90°	1.97

SPAN B144, NORTH PIN AND HANGER

REV.	DATE	REVISION DESCRIPTION	SHEET NO.
-	-	-	-
-	-	-	-
-	-	-	-
-	-	-	-
-	-	-	-
-	-	-	-

THE INFORMATION, INCLUDING ESTIMATED QUANTITIES OF WORK, SHOWN ON THESE SHEETS IS BASED ON LIMITED INVESTIGATIONS BY THE STATE AND IS IN NO WAY WARRANTED TO INDICATE THE CONDITIONS OF ACTUAL QUANTITIES OF WORK WHICH WILL BE REQUIRED.

Plotted Date: 7/2/2013

DESIGNER/DRAFTER: B.A./M.G.
CHECKED BY: J.H.M. II
SCALE AS NOTED

STATE OF CONNECTICUT
DEPARTMENT OF TRANSPORTATION

Filename: ...\SB_MSH_11_Br01469B_171_367_S_27_GPN-2.dgn

SIGNATURE/BLOCK:
Close, Jensen and Miller, P.C.
1137 Silas Deane Highway
Wethersfield, CT 06109

PROJECT TITLE: REPLACEMENT OF EXPANSION JOINTS IN DISTRICT 1

TOWN: HARTFORD

DRAWING TITLE: GENERAL PLAN - 2 BRIDGE NO. 01469B

PROJECT NO. 171-367
DRAWING NO. S-27
SHEET NO. 03.27

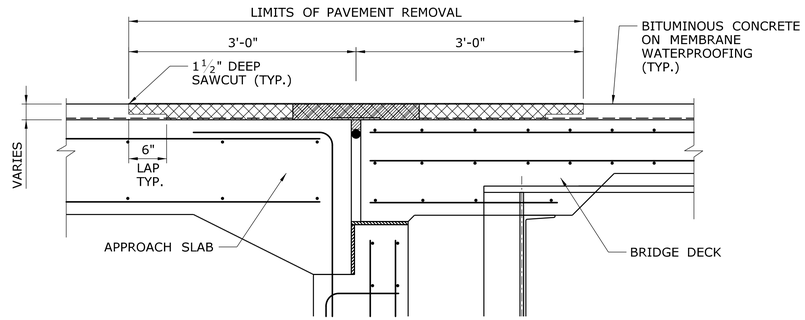

EXISTING CONDITION - LIMITS OF REMOVAL

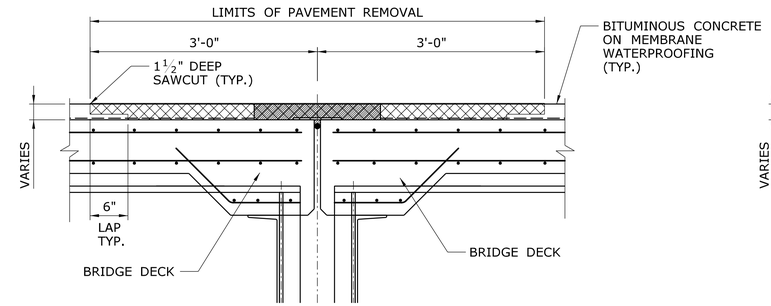

EXISTING CONDITION - LIMITS OF REMOVAL

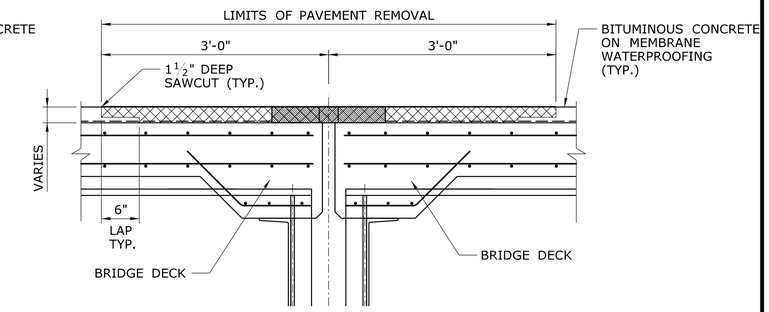

EXISTING CONDITION - LIMITS OF REMOVAL

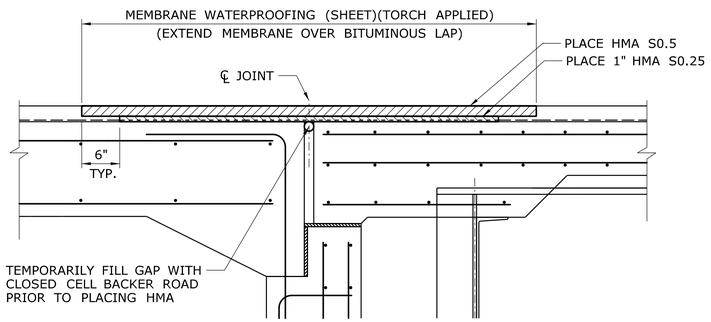

INTERMEDIATE CONDITION

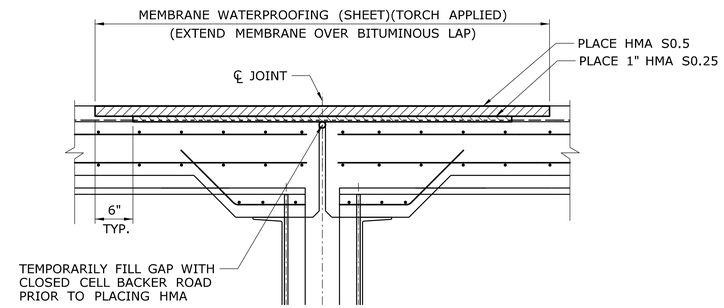

INTERMEDIATE CONDITION

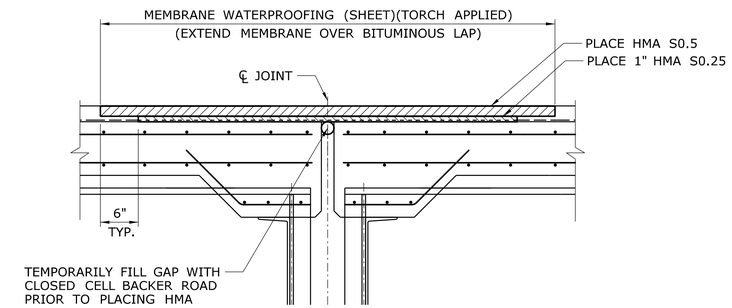

INTERMEDIATE CONDITION

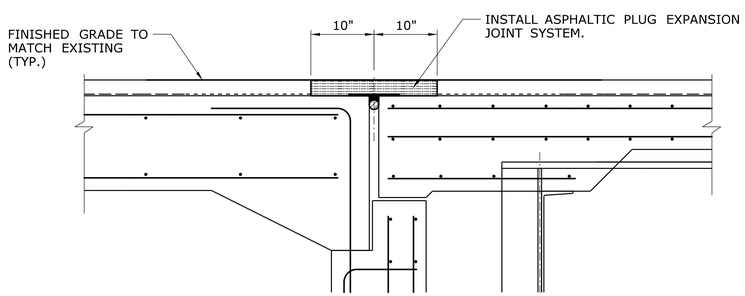

FINAL CONDITION

JOINT REPLACEMENT AT ABUTMENTS

SECTION A S-26 / A S-27

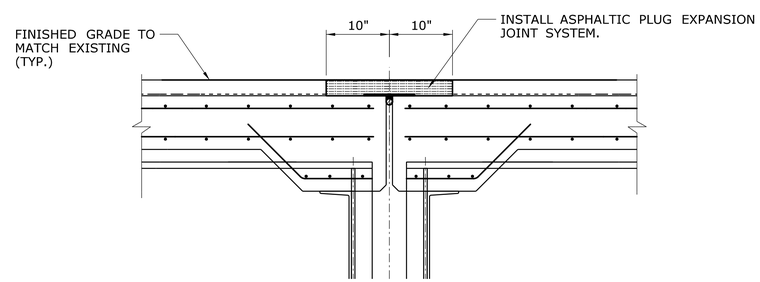

FINAL CONDITION

JOINT REPLACEMENT AT PIER NOS. 2W, 3W, 3E, 4W, 5E, 6W, 6E, 7E, 9, 12, 15, 18, 21, 24, 27, SPAN B141 NORTH HINGE, SPAN B143 SOUTH HINGE

SECTION B S-26 / B S-27

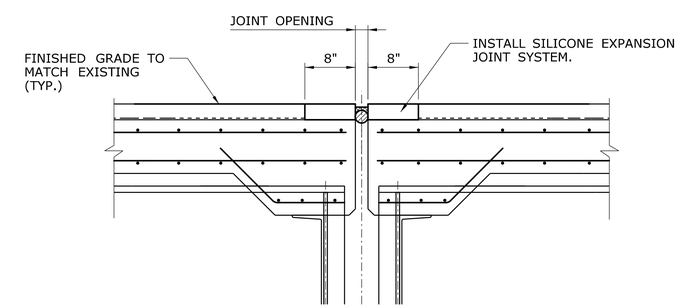

FINAL CONDITION

JOINT REPLACEMENT AT SPAN B141 SOUTH PIN & HANGER, SPAN B143 NORTH PIN & HANGER, SPAN B144 NORTH PIN & HANGER

SECTION C S-27

REV.	DATE	REVISION DESCRIPTION	SHEET NO.
-	-	-	-
-	-	-	-
-	-	-	-
-	-	-	-
-	-	-	-
-	-	-	-

THE INFORMATION, INCLUDING ESTIMATED QUANTITIES OF WORK, SHOWN ON THESE SHEETS IS BASED ON LIMITED INVESTIGATIONS BY THE STATE AND IS IN NO WAY WARRANTED TO INDICATE THE CONDITIONS OF ACTUAL QUANTITIES OF WORK WHICH WILL BE REQUIRED.

Plotted Date: 7/2/2013

DESIGNER/DRAFTER: B.A./M.G.
CHECKED BY: J.H.M. II
SCALE: 1" = 1'-0"

STATE OF CONNECTICUT
DEPARTMENT OF TRANSPORTATION

Filename: ...\SB_MSH_11_Br01469B_171_367_S_28_JOINT.dgn

SIGNATURE/BLOCK:
Close, Jensen and Miller, P.C.
1137 Silas Deane Highway
Wethersfield, CT 06109

PROJECT TITLE: REPLACEMENT OF EXPANSION JOINTS IN DISTRICT 1

TOWN: HARTFORD

DRAWING TITLE: JOINT DETAILS BRIDGE NO. 01469B

PROJECT NO. 171-367
DRAWING NO. S-28
SHEET NO. 03.28

SILICONE EXPANSION JOINT OPENING TABLE	
INSTALL TEMP. DEG. F°	PERPENDICULAR JOINT OPENING (IN.)
40°	1.56
50°	1.48
60°	1.40
70°	1.32
80°	1.24
90°	1.16

AT PIER NO. 1

SILICONE EXPANSION JOINT OPENING TABLE	
INSTALL TEMP. DEG. F°	PERPENDICULAR JOINT OPENING (IN.)
40°	1.56
50°	1.48
60°	1.40
70°	1.32
80°	1.24
90°	1.16

AT PIER NO. 3

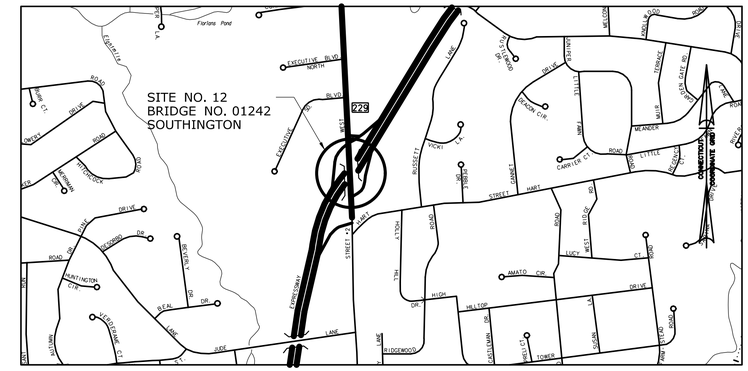

LOCATION PLAN - SITE NO. 12

SCALE: 1" = 1000'

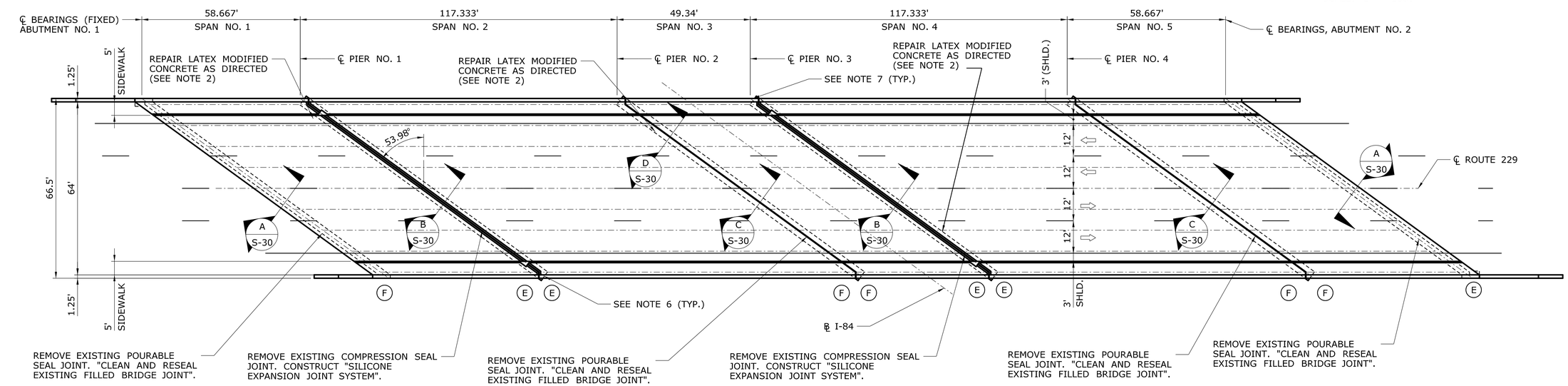

F FIXED BEARINGS

E EXPANSION BEARINGS

PLAN BRIDGE NO. 01242, SITE NO. 12

ROUTE 229 OVER I-84

SCALE: 1" = 20'

EXISTING CATHODIC DECK PROTECTION SYSTEM

THE EXISTING DECK HAS A CATHODIC PROTECTION SYSTEM. SEE PROJECT REFERENCE INFORMATION ON SHEET G-03. THE CONTRACTOR SHALL USE CAUTION TO AVOID DAMAGE TO THE EXISTING SYSTEM.

NOTES:

1. ALL WORK TO SAWCUT BITUMINOUS PAVEMENT, REMOVE AND DISPOSE OF BITUMINOUS CONCRETE, MEMBRANE WATERPROOFING, EXISTING JOINT COMPONENTS AND SEALING ELEMENTS, EXCLUDING THE REMOVAL OF PORTLAND CEMENT CONCRETE HEADERS SHALL BE INCLUDED IN THE COST OF THE APPROPRIATE JOINT SYSTEM (SEE SPECIAL PROVISIONS).
2. THE LIMITS OF CONCRETE REPAIR WORK SHALL BE AS DIRECTED BY THE ENGINEER. SEE SECTION D SHEET S-33 AND SPECIAL PROVISION "LATEX MODIFIED CONCRETE". USE CAUTION TO AVOID DAMAGE TO THE EXISTING CATHODIC PROTECTION SYSTEM IN THE DECK.
3. THE CONCRETE SHALL BE CHIPPED OUT TO A SOUND SURFACE WITHIN THE LIMITS AS DESCRIBED ON THE PLANS. EXTREME CARE SHALL BE TAKEN WHERE REINFORCING STEEL IS UNCOVERED NOT TO DAMAGE THE STEEL OR ITS BOND IN THE SURROUNDING CONCRETE.
4. ALL EXPOSED REINFORCING STEEL SHALL BE THOROUGHLY CLEANED AND REUSED. THE EXISTING REINFORCING SHALL BE REPLACED WHEN:
   - EXISTING REBAR HAS LOST 25% OR MORE OF THE ORIGINAL CROSS SECTIONAL AREA.
   - EXISTING REBAR IS BROKEN.
   - AS ORDERED BY THE ENGINEER.
4. THE REMOVED AREAS SHALL BE FILLED AND FINISHED WITH LATEX MODIFIED CONCRETE. THE WORK TO REMOVE AND REPLACE EXISTING CONCRETE SHALL BE PAID FOR UNDER THE ITEM "LATEX MODIFIED CONCRETE".
5. WHERE EXISTING BRIDGE DECK JOINTS ARE CONCEALED BENEATH BITUMINOUS CONCRETE OVERLAY THE CONTRACTOR SHALL VERIFY THE BRIDGE DECK JOINT LOCATION AND HAVE THE LIMITS OF SAW-CUTTING APPROVED BY THE ENGINEER.
6. FOR PARAPET AND SIDEWALK JOINT TREATMENT DETAILS, SEE DRAWING NOS. S-02 AND S-03.
7. PAVEMENT MARKINGS SUCH AS 4" WHITE, 4" YELLOW, 6" WHITE, 8" WHITE, AND SYMBOLS AND LEGENDS THAT MAY BE REMOVED AS A RESULT OF CONSTRUCTION SHALL BE REPLACED WITH SIMILAR EPOXY RESIN PAVEMENT MARKINGS. THE COST OF THIS WORK SHALL BE INCLUDED IN THE GENERAL COST OF CONSTRUCTION.

REV.	DATE	REVISION DESCRIPTION	SHEET NO.
-	-	-	-
-	-	-	-
-	-	-	-
-	-	-	-
-	-	-	-
-	-	-	-

THE INFORMATION, INCLUDING ESTIMATED QUANTITIES OF WORK, SHOWN ON THESE SHEETS IS BASED ON LIMITED INVESTIGATIONS BY THE STATE AND IS IN NO WAY WARRANTED TO INDICATE THE CONDITIONS OF ACTUAL QUANTITIES OF WORK WHICH WILL BE REQUIRED.

Plotted Date: 7/2/2013

DESIGNER/DRAFTER: **B.A./M.G.**

CHECKED BY: **J.H.M. II**

SCALE AS NOTED

STATE OF CONNECTICUT
DEPARTMENT OF TRANSPORTATION

Filename: ...\SB_MSH_12_Br01242_171_367_S_29_GPN.dgn

SIGNATURE/BLOCK:

JOHN H. MILLER JR. LICENSED NO. 4142 STATE OF CONNECTICUT PROFESSIONAL ENGINEER

Close, Jensen and Miller, P.C.
1137 Silas Deane Highway
Wethersfield, CT 06109

PROJECT TITLE: **REPLACEMENT OF EXPANSION JOINTS IN DISTRICT 1**

TOWN: **SOUTHINGTON**

DRAWING TITLE: **GENERAL PLAN BRIDGE NO. 01242**

PROJECT NO. **171-367**

DRAWING NO. **S-29**

SHEET NO. **03.29**

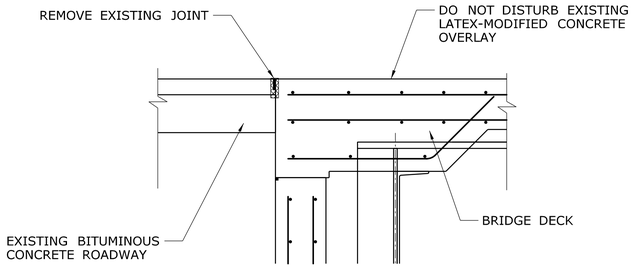

EXISTING CONDITION - LIMITS OF REMOVAL

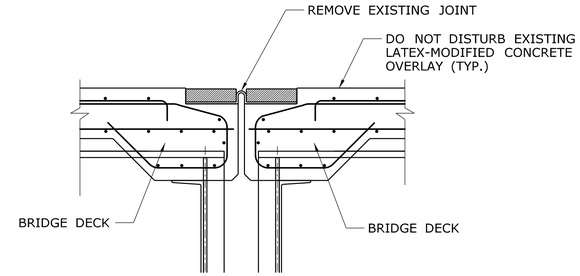

EXISTING CONDITION - ROADWAY

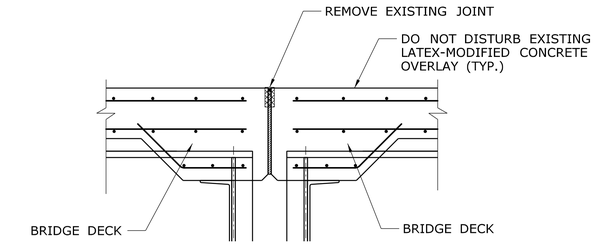

EXISTING CONDITION - LIMITS OF REMOVAL

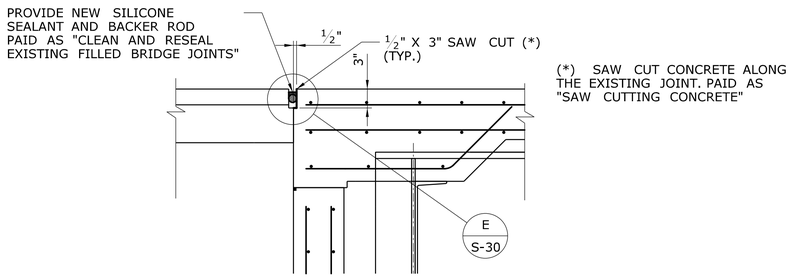

PROPOSED CONDITION

AT ABUTMENTS

"CLEAN AND RESEAL EXISTING FILLED BRIDGE JOINTS"

SECTION A S-29

SCALE: 1" = 1'-0"

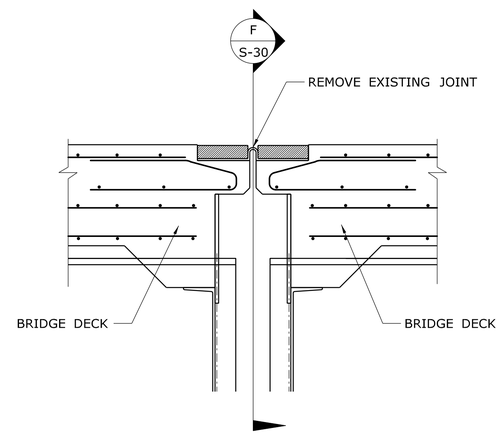

EXISTING CONDITION - SIDEWALK

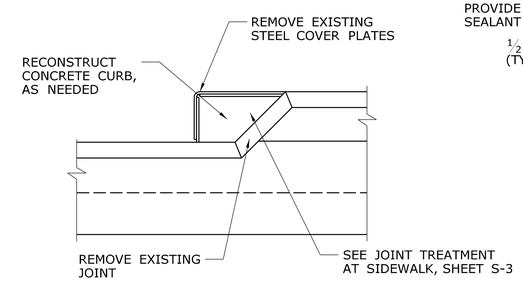

SECTION F S-30

SCALE: 1" = 1'-0"

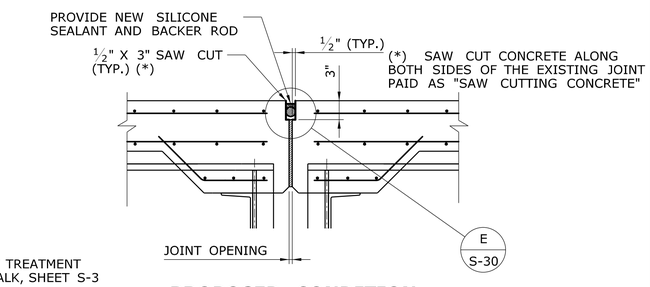

PROPOSED CONDITION

AT PIERS NO. 2 AND 4

SECTION C S-29

SCALE: 1" = 1'-0"

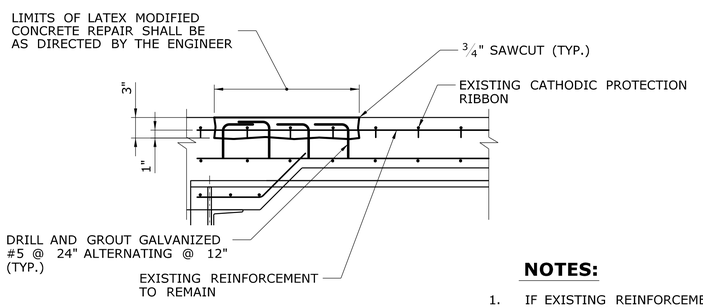

LATEX MODIFIED CONCRETE

REPAIR DETAIL

SECTION D S-29

SCALE: 1" = 1'-0"

NOTES:

1. IF EXISTING REINFORCEMENT IS ENCOUNTERED DURING DRILLING, THE HOLE SHALL BE ABANDONED, FILLED WITH NON-SHRINK GROUT OR CHEMICAL ADHESIVE AND RELOCATED AS DIRECTED BY THE ENGINEER.
2. ℄ DRILLED HOLE FOR CHEMICALLY ANCHORED #5 (GALVANIZED) AT SPACING SHOWN ON THE DETAIL. DEPTH AND DIAMETER OF HOLE TO BE AS REQUIRED BY CHEMICAL ADHESIVE MANUFACTURER TO DEVELOP THE FULL STRENGTH OF THE BAR. THIS WORK TO BE INCLUDED FOR PAYMENT UNDER THE ITEM "LATEX MODIFIED CONCRETE".

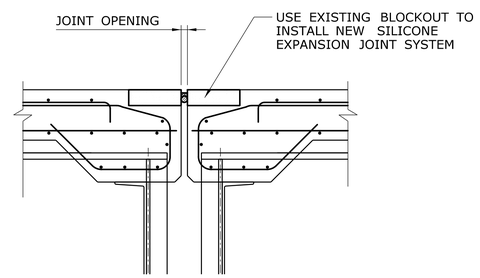

PROPOSED CONDITION

AT PIERS NO. 1 AND 3

SECTION B S-29

SCALE: 1" = 1'-0"

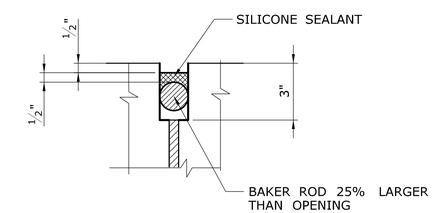

DETAIL E S-30

SCALE: 3" = 1'-0"

CLEAN AND RESEAL EXISTING FILLED BRIDGE JOINTS

NOTES:

1. SILICONE SEALANT AND BAKER ROD TO BE PAID UNDER "CLEAN AND RESEAL EXISTING FILLED BRIDGE JOINTS".
2. THE BAKER ROD SHALL BE COMPRISED OF CLOSED CELL EXPANDED POLYETHYLENE FOAM, COMPATIBLE WITH COLD APPLIED SEALS UNLESS OTHERWISE APPROVED.

REV.	DATE	REVISION DESCRIPTION	SHEET NO.
-	-	-	-
-	-	-	-
-	-	-	-
-	-	-	-
-	-	-	-
-	-	-	-

THE INFORMATION, INCLUDING ESTIMATED QUANTITIES OF WORK, SHOWN ON THESE SHEETS IS BASED ON LIMITED INVESTIGATIONS BY THE STATE AND IS IN NO WAY WARRANTED TO INDICATE THE CONDITIONS OF ACTUAL QUANTITIES OF WORK WHICH WILL BE REQUIRED.

Plotted Date: 7/2/2013

DESIGNER/DRAFTER: B.A./M.G.
CHECKED BY: J.H.M. II
SCALE AS NOTED

STATE OF CONNECTICUT
DEPARTMENT OF TRANSPORTATION

Filename: ...\SB_MSH_12_Br01242_171_367_S_30_JOINT.dgn

SIGNATURE/BLOCK:
Close, Jensen and Miller, P.C.
1137 Silas Deane Highway
Wethersfield, CT 06109

PROJECT TITLE: REPLACEMENT OF EXPANSION JOINTS IN DISTRICT 1

TOWN: SOUTHINGTON

DRAWING TITLE: JOINT DETAILS BRIDGE NO. 01242

PROJECT NO. 171-367
DRAWING NO. S-30
SHEET NO. 03.30

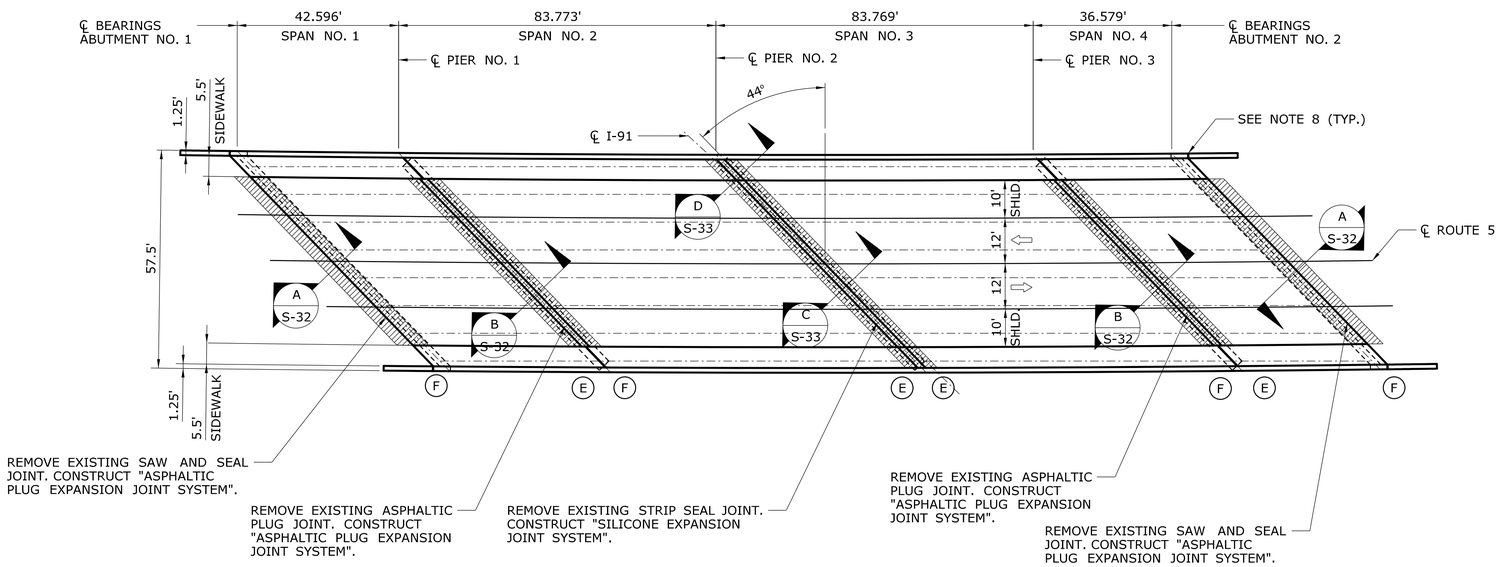

(F) FIXED BEARINGS

(E) EXPANSION BEARINGS

PLAN BRIDGE NO. 00443, SITE NO. 15
INTERSTATE 91 UNDER ROUTE 5

SCALE: 1" = 20'

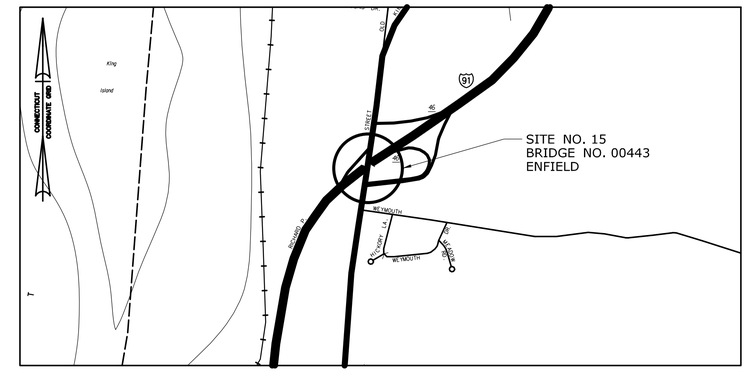

LOCATION PLAN - SITE NO. 15

SCALE: 1" = 1000'

NOTES:

1. ALL WORK TO SAWCUT BITUMINOUS PAVEMENT, REMOVE AND DISPOSE OF BITUMINOUS CONCRETE, MEMBRANE WATERPROOFING, EXISTING JOINT COMPONENTS AND SEALING ELEMENTS, EXCLUDING THE REMOVAL OF PORTLAND CEMENT CONCRETE HEADERS SHALL BE INCLUDED IN THE COST OF THE APPROPRIATE JOINT SYSTEM (SEE SPECIAL PROVISIONS).
2. ALL WORK INVOLVING REMOVAL AND RECONSTRUCTION OF CONCRETE, INCLUDING CONCRETE HEADERS, DECK SLABS, APPROACH SLABS, HAUNCHES, SIDEWALKS, AND PARAPETS, AS SHOWN ON THE PLANS, SHALL BE PAID UNDER THE ITEM "CONSTRUCT CONCRETE HEADERS".
3. THE CONCRETE SHALL BE CHIPPED OUT TO A SOUND SURFACE WITHIN THE LIMITS AS DESCRIBED ON THE PLANS. EXTREME CARE SHALL BE TAKEN WHERE REINFORCING STEEL IS UNCOVERED NOT TO DAMAGE THE STEEL OR ITS BOND IN THE SURROUNDING CONCRETE.
4. ALL EXPOSED REINFORCING STEEL SHALL BE THOROUGHLY CLEANED AND REUSED. THE EXISTING REINFORCING SHALL BE REPLACED WHEN:
   - EXISTING REBAR HAS LOST 25% OR MORE OF THE ORIGINAL CROSS SECTIONAL AREA.
   - EXISTING REBAR IS BROKEN.
   - AS ORDERED BY THE ENGINEER.
5. THE REMOVED AREAS SHALL BE FILLED AND FINISHED WITH FAST SETTING CONCRETE AND MATCH EXISTING GRADES.
6. WHERE EXISTING BRIDGE DECK JOINTS ARE CONCEALED BENEATH BITUMINOUS CONCRETE OVERLAY THE CONTRACTOR SHALL VERIFY THE BRIDGE DECK JOINT LOCATION AND HAVE THE LIMITS OF SAW-CUTTING APPROVED BY THE ENGINEER.
7. MEMBRANE WATERPROOFING SHALL BE "MEMBRANE WATERPROOFING (SHEET)(TORCH APPLIED)" AND SHALL BE PLACED PRIOR TO PLACEMENT OF HMA S0.25. THE CONTRACTOR MAY MASK OFF THE LIMITS OF THE PROPOSED HEADERS WHEN CONSTRUCTION THE HEADERS AS APPROVED BY THE ENGINEER.
8. FOR PARAPET AND SIDEWALK JOINT TREATMENT DETAILS, SEE DRAWING NOS. S-02 AND S-03.
9. PAVEMENT MARKINGS SUCH AS 4" WHITE, 4" YELLOW, 6" WHITE, 8" WHITE, AND SYMBOLS AND LEGENDS THAT MAY BE REMOVED AS A RESULT OF CONSTRUCTION SHALL BE REPLACED WITH SIMILAR EPOXY RESIN PAVEMENT MARKINGS. THE COST OF THIS WORK SHALL BE INCLUDED IN THE GENERAL COST OF CONSTRUCTION.

ASPHALTIC PLUG JOINT OPENING TABLE

INSTALL TEMP. DEG. F°	PERPENDICULAR JOINT OPENING (IN.)
40°	1.21
50°	1.18
60°	1.15
70°	1.12
80°	1.09
90°	1.06

AT PIER 1

SILICONE EXPANSION JOINT OPENING TABLE

INSTALL TEMP. DEG. F°	PERPENDICULAR JOINT OPENING (IN.)
40°	1.68
50°	1.58
60°	1.49
70°	1.39
80°	1.29
90°	1.19

AT PIER 2

ASPHALTIC PLUG DESIGN THERMAL MOVEMENT

THE DESIGN THERMAL MOVEMENT AT ABUTMENT NO. 1 IS 0".
THE DESIGN THERMAL MOVEMENT AT PIER NO. 1 IS 0.39".
THE DESIGN THERMAL MOVEMENT AT PIER NO. 2 IS 0.33".
THE DESIGN THERMAL MOVEMENT AT ABUTMENT NO. 2 IS 0".

REV.	DATE	REVISION DESCRIPTION	SHEET NO.
-	-	-	-
-	-	-	-
-	-	-	-
-	-	-	-
-	-	-	-
-	-	-	-

THE INFORMATION, INCLUDING ESTIMATED QUANTITIES OF WORK, SHOWN ON THESE SHEETS IS BASED ON LIMITED INVESTIGATIONS BY THE STATE AND IS IN NO WAY WARRANTED TO INDICATE THE CONDITIONS OF ACTUAL QUANTITIES OF WORK WHICH WILL BE REQUIRED.

Plotted Date: 7/2/2013

DESIGNER/DRAFTER: B.A./M.G.
CHECKED BY: J.H.M. II
SCALE AS NOTED

STATE OF CONNECTICUT
DEPARTMENT OF TRANSPORTATION

Filename: ...\SB_MSH_15_Br00443_171_367_S_31_GPN.dgn

SIGNATURE/BLOCK:
Close, Jensen and Miller, P.C.
1137 Silas Deane Highway
Wethersfield, CT 06109

PROJECT TITLE: REPLACEMENT OF EXPANSION JOINTS IN DISTRICT 1

TOWN: ENFIELD

DRAWING TITLE: GENERAL PLAN BRIDGE NO. 00443

PROJECT NO. 171-367
DRAWING NO. S-31
SHEET NO. 03.31

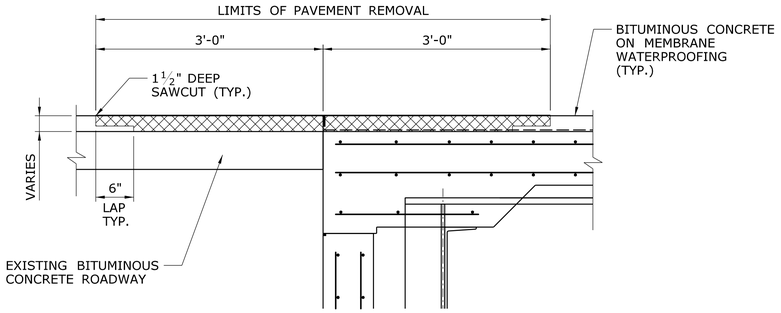

EXISTING CONDITION - LIMITS OF REMOVAL

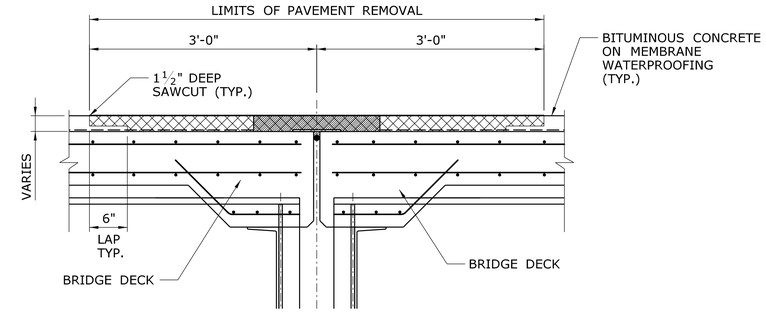

EXISTING CONDITION - LIMITS OF REMOVAL

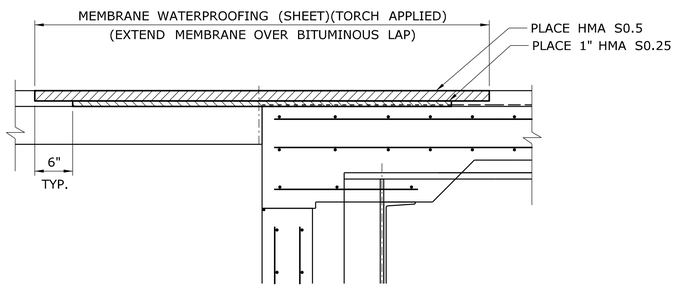

INTERMEDIATE CONDITION

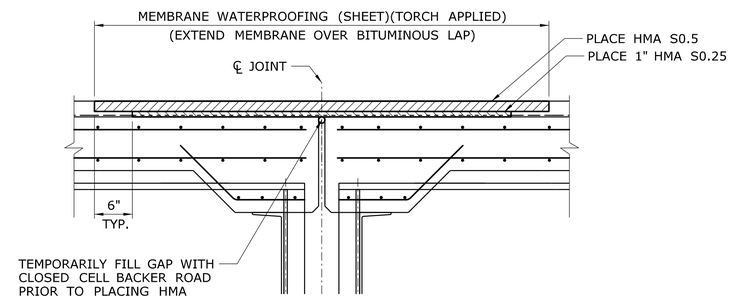

INTERMEDIATE CONDITION

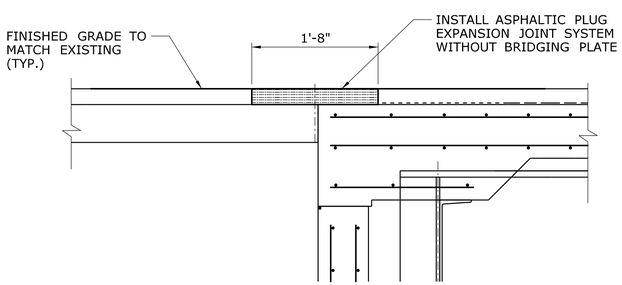

FINAL CONDITION
JOINT REPLACEMENT AT ABUTMENTS

SECTION A / S-31

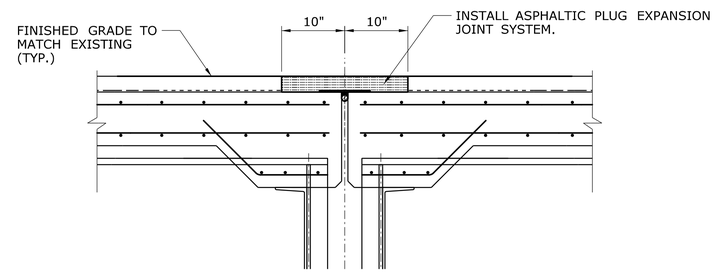

FINAL CONDITION
JOINT REPLACEMENT AT PIERS NOS. 1 AND 3

SECTION B / S-31

REV.	DATE	REVISION DESCRIPTION	SHEET NO.
-	-	-	-
-	-	-	-
-	-	-	-
-	-	-	-
-	-	-	-
-	-	-	-

THE INFORMATION, INCLUDING ESTIMATED QUANTITIES OF WORK, SHOWN ON THESE SHEETS IS BASED ON LIMITED INVESTIGATIONS BY THE STATE AND IS IN NO WAY WARRANTED TO INDICATE THE CONDITIONS OF ACTUAL QUANTITIES OF WORK WHICH WILL BE REQUIRED.

Plotted Date: 7/2/2013

DESIGNER/DRAFTER: B.A./M.G.
CHECKED BY: J.H.M. II
SCALE: 1" = 1'-0"

STATE OF CONNECTICUT
DEPARTMENT OF TRANSPORTATION

Filename: ...\SB_MSH_15_Br00443_171_367_S_32_JOINT.dgn

SIGNATURE/BLOCK:
Close, Jensen and Miller, P.C.
1137 Silas Deane Highway
Wethersfield, CT 06109

PROJECT TITLE:
REPLACEMENT OF EXPANSION JOINTS IN DISTRICT 1

TOWN: **ENFIELD**

DRAWING TITLE:
JOINT DETAILS - 1
BRIDGE NO. 00443

PROJECT NO. 171-367
DRAWING NO. S-32
SHEET NO. 03.32

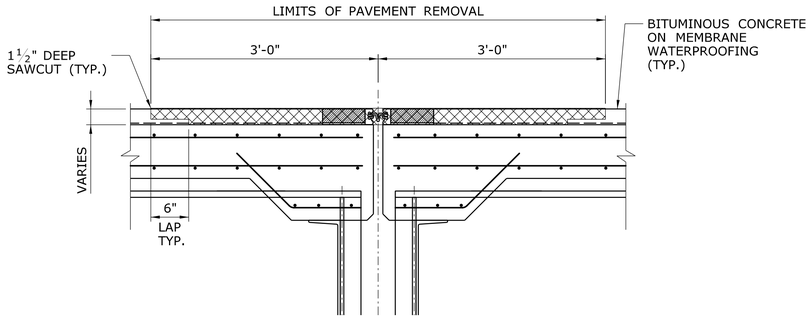

EXISTING CONDITION - LIMITS OF REMOVAL

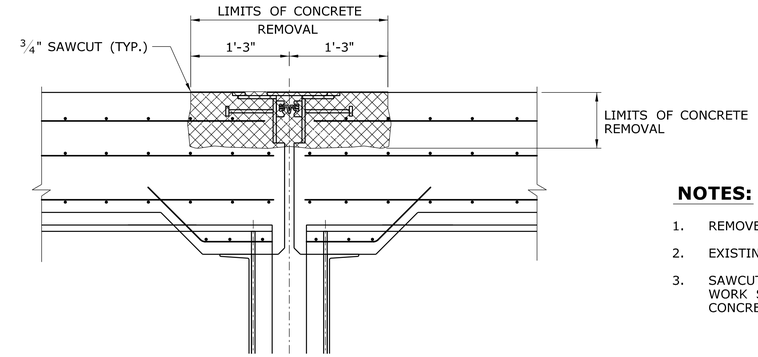

EXISTING CONDITION - LIMITS OF REMOVAL

NOTES:

1. REMOVE CONCRETE HEADER TO THE LIMITS SHOWN.
2. EXISTING EXPOSED REINFORCEMENT TO REMAIN.
3. SAWCUTTING, CONCRETE REMOVAL AND RECONSTRUCTION WORK SHALL BE PAID FOR UNDER THE ITEM "CONSTRUCT CONCRETE HEADERS", SEE SPECIAL PROVISION.

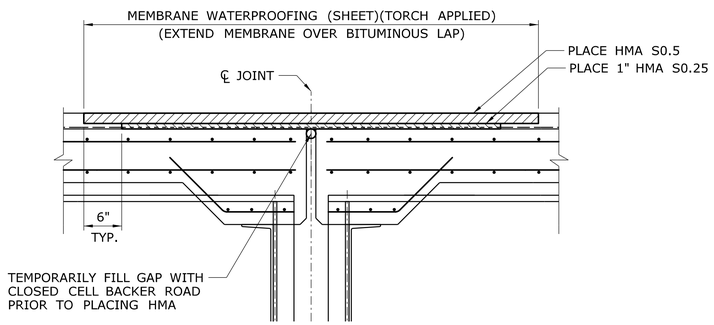

INTERMEDIATE CONDITION

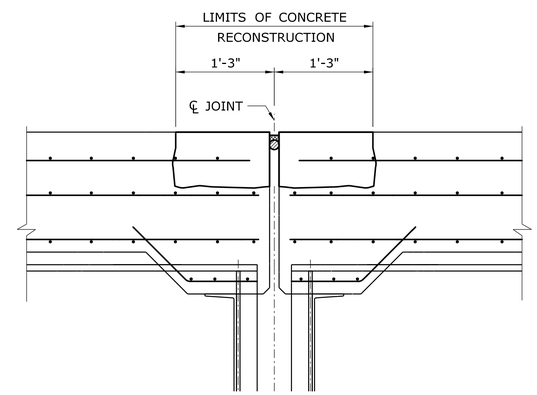

FINAL CONDITION

SIDEWALK

SECTION D / S-31

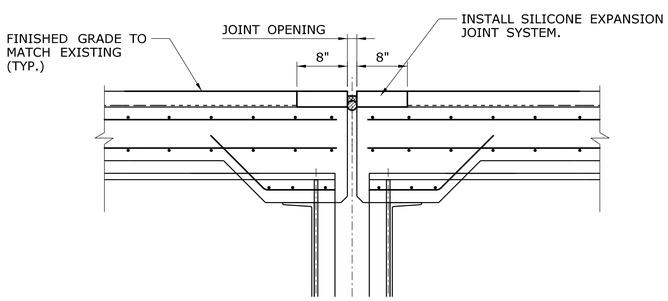

FINAL CONDITION

ROADWAY

SECTION C / S-31

JOINT REPLACEMENT AT PIER NO. 2

REV.	DATE	REVISION DESCRIPTION	SHEET NO.
-	-	-	-
-	-	-	-
-	-	-	-
-	-	-	-
-	-	-	-
-	-	-	-

THE INFORMATION, INCLUDING ESTIMATED QUANTITIES OF WORK, SHOWN ON THESE SHEETS IS BASED ON LIMITED INVESTIGATIONS BY THE STATE AND IS IN NO WAY WARRANTED TO INDICATE THE CONDITIONS OF ACTUAL QUANTITIES OF WORK WHICH WILL BE REQUIRED.

Plotted Date: 7/2/2013

DESIGNER/DRAFTER: B.A./M.G.
CHECKED BY: J.H.M. II
SCALE: 1" = 1'-0"

STATE OF CONNECTICUT
DEPARTMENT OF TRANSPORTATION

Filename: ...\SB_MSH_15_Br00443_171_367_S_33_JOINT.dgn

SIGNATURE/BLOCK:
Close, Jensen and Miller, P.C.
1137 Silas Deane Highway
Wethersfield, CT 06109

PROJECT TITLE: REPLACEMENT OF EXPANSION JOINTS IN DISTRICT 1

TOWN: ENFIELD

DRAWING TITLE: JOINT DETAILS - 2 BRIDGE NO. 00443

PROJECT NO. 171-367
DRAWING NO. S-33
SHEET NO. 03.33