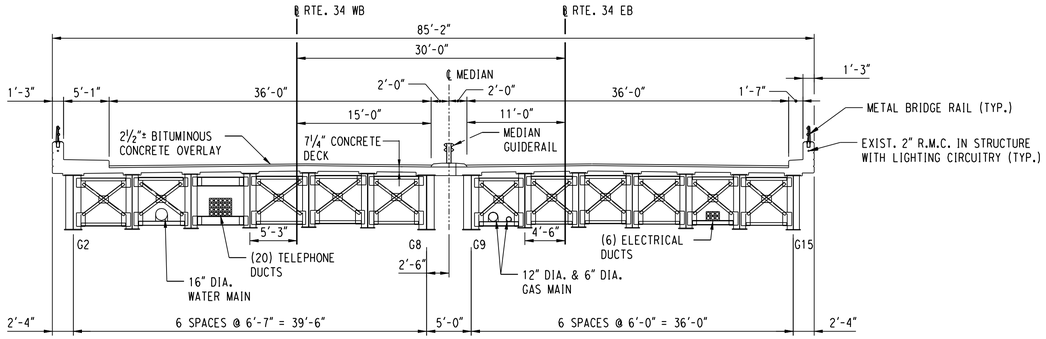

EXISTING CROSS SECTION

SCALE: ⅛" = 1'-0"

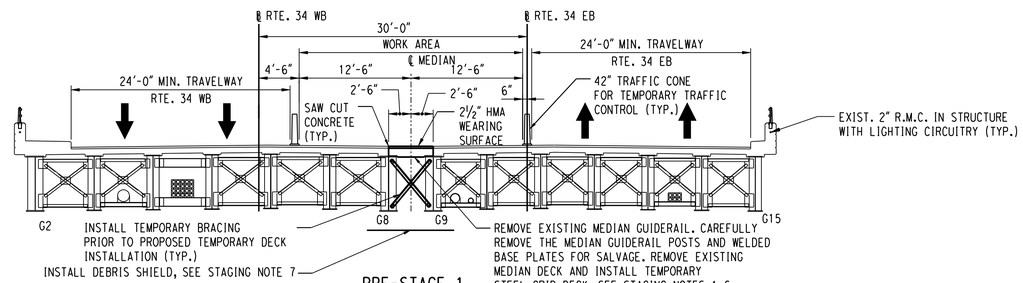

PRE-STAGE 1

SCALE: ⅛" = 1'-0"

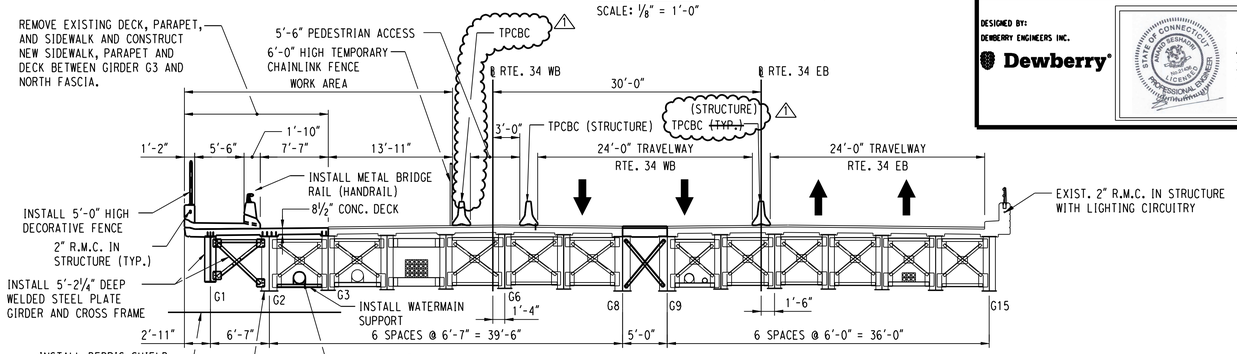

STAGE 1A

SCALE: ⅛" = 1'-0"

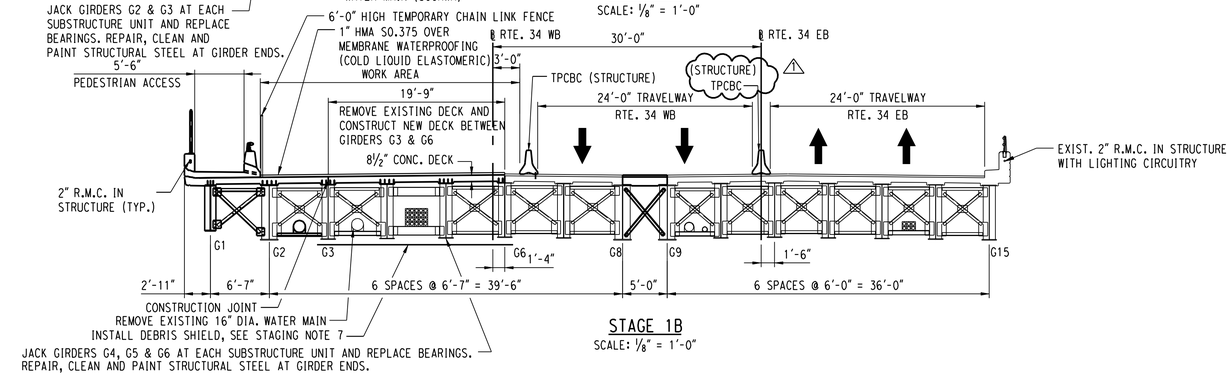

STAGE 1B

SCALE: ⅛" = 1'-0"

DESIGNED BY:
DEWBERRY ENGINEERS INC.
Dewberry

Anand Seshadri
2013.12.18
12:26:14-05'00'

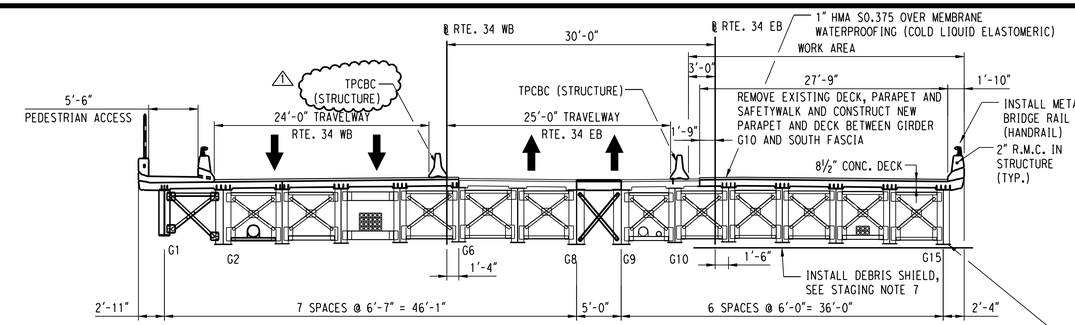

STAGE 2

SCALE: ⅛" = 1'-0"

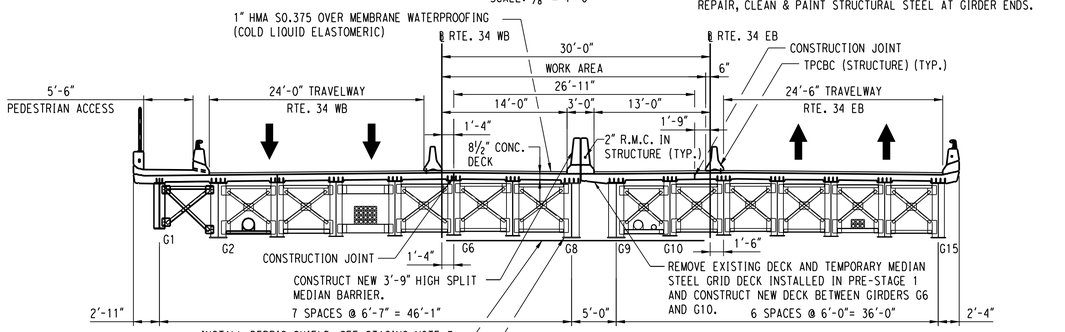

STAGE 3

SCALE: ⅛" = 1'-0"

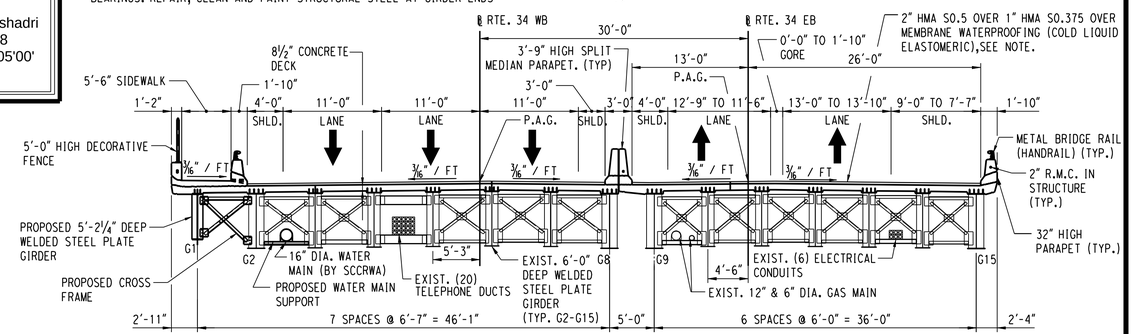

PROPOSED CROSS SECTION

SCALE: ⅛" = 1'-0"

NOTE: INSTALL FINAL COURSE OF 2" HMA S0.5 AND PERMANENT PAVEMENT MARKINGS USING CONNDOT APPROVED TEMPORARY TRAFFIC CONTROL PROCEDURES

STAGING NOTES

1. WORK DURING PRE-STAGE 1 SHALL BE ACCOMPLISHED UTILIZING CONNDOT APPROVED TEMPORARY TRAFFIC CONTROL PROCEDURES.
2. THE CONTRACTOR SHALL REMOVE THE MEDIAN GUIDERAIL, CURB AND DECK IN SECTIONS AND COMPLETE THE INSTALLATION OF THE TEMPORARY STEEL GRID DECK SYSTEM TO THE LIMITS OF REMOVED MEDIAN DECK SECTIONS AT THE END OF EACH WORK DAY/NIGHT SO AS TO NOT LEAVE A GAP IN THE DECK. CAREFULLY REMOVE THE MEDIAN GUIDERAIL POSTS AND WELDED BASE PLATES FOR SALVAGE. THE COST OF REMOVAL SHALL BE INCLUDED UNDER THE ITEM "REMOVAL OF SUPERSTRUCTURE".
3. THE TEMPORARY STEEL GRID DECK SYSTEM INCLUDING ATTACHMENTS TO GIRDERS G8 & G9, BRACINGS (25'-0" MAX. SPACING) AND ALL APPURTERANCES SHALL BE DESIGNED BY THE CONTRACTOR FOR AASHTO HL-93 LOADS AND GEOMETRY OF THE EXISTING BRIDGE. THE CONTRACTOR SHALL SUBMIT PLANS, COMPUTATIONS AND WORKING DRAWINGS PREPARED, SIGNED AND SEALED BY AN ENGINEER LICENSED IN THE STATE OF CONNECTICUT FOR APPROVAL PRIOR TO INSTALLATION.
4. THE CONTRACTOR SHALL REMOVE THE TEMPORARY STEEL GRID DECK SYSTEM INCLUDING ATTACHMENTS TO GIRDERS G8 & G9, BRACINGS AND ALL APPURTENANCES INSTALLED IN PRE-STAGE 1 IN STAGE 3 PRIOR TO CONSTRUCTION OF NEW DECK.
5. THE COST OF DESIGNING, FURNISHING, INSTALLING AND REMOVAL OF TEMPORARY STEEL GRID DECK SYSTEM, INCLUDING ATTACHMENTS TO GIRDERS G8 & G9, BRACINGS AND ALL APPURTENANCES SHALL BE PAID UNDER THE ITEM "STEEL GRID DECKING", SEE SPECIAL PROVISIONS.
6. THE CONTRACTOR SHALL REMOVE THE EXISTING GUIDERAIL IN THE MEDIAN IN ITS ENTIRETY AND PROVIDE TRAFFIC DRUMS ALONG THE MEDIAN TO PROTECT VEHICULAR TRAFFIC TRAVELLING IN OPPOSITE DIRECTIONS.
7. THE CONTRACTOR SHALL INSTALL A DEBRIS SHIELD TO PREVENT ANY DEBRIS FROM FALLING INTO THE WATER WAY BELOW. THE CONTRACTOR SHALL DEVELOP DETAILS AND METHODS OF SUPPORT AND SUBMIT IT TO THE ENGINEER FOR REVIEW AND APPROVAL. THE COST OF INSTALLATION AND REMOVAL DURING EACH STAGE OF CONSTRUCTION SHALL BE INCLUDED UNDER THE ITEM "REMOVAL OF SUPERSTRUCURE", SEE SPECIAL PROVISIONS.

REV.	DATE	REVISION DESCRIPTION	SHEET NO.
1	12/13/13	REVISED BARRIER TYPE	04.04

Filename: SB_Br00947_stagesections.A1.dgn — Border Version: 8/1/05

DESIGNER/DRAFTER: T.STRNAD/S.ERDAS
CHECKED BY: A. SESHADRI
SCALE AS NOTED

STATE OF CONNECTICUT
DEPARTMENT OF TRANSPORTATION

ENGINEER: DEWBERRY ENGINEERS INC.
APPROVED BY: -
DATE:

Dewberry
59 Elm Street, Suite 101
New Haven, CT 06510-2047

PROJECT TITLE:
REHABILITATION OF BRIDGE NO. 00947 ROUTE 34 OVER NAUGATUCK RIVER

TOWN: DERBY

DRAWING TITLE: BRIDGE STAGING SECTIONS

PROJECT NO. 36-182
DRAWING NO. S-3
SHEET NO. 04.04.A1

Connecticut Department of Transportation
QA/QC Format Check

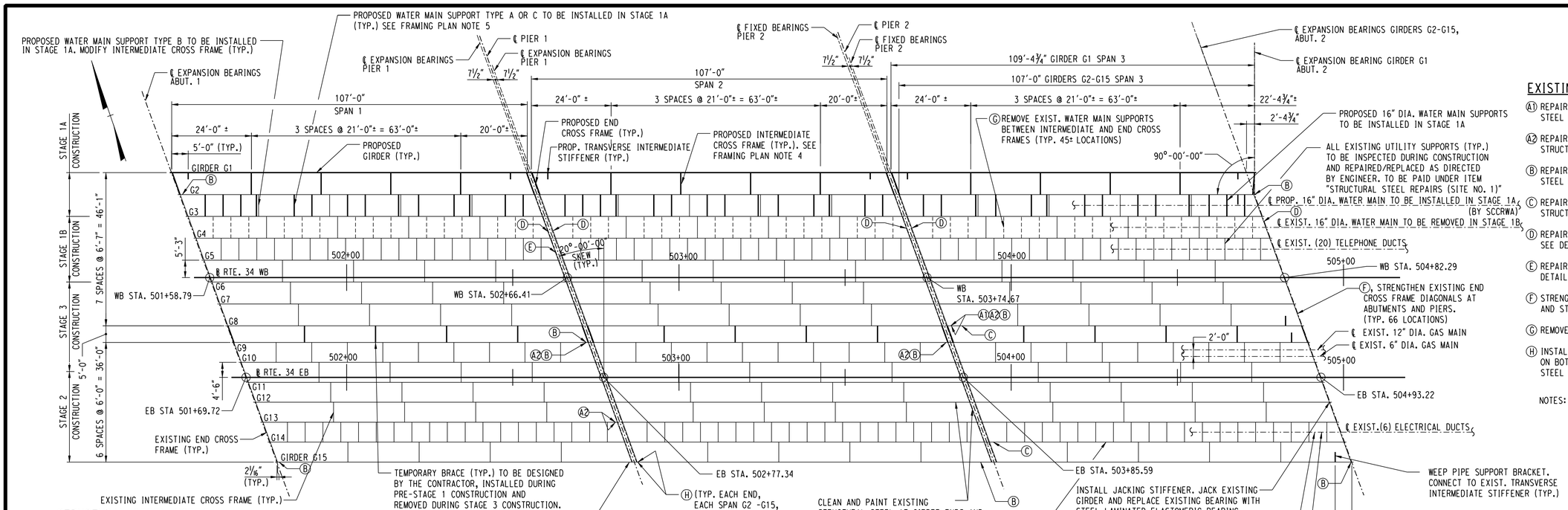

FRAMING PLAN

SCALE: 1/16" = 1'-0"

EXISTING GIRDER REPAIR LEGEND

- (A1) REPAIR TOP OF GIRDER WEB, SEE DETAIL A3 AND STRUCTURAL STEEL NOTE 2.
- (A2) REPAIR BOTTOM OF GIRDER WEB, SEE DETAIL A3 AND STRUCTURAL STEEL NOTE 2.
- (B) REPAIR BEARING STIFFENER, SEE DETAIL B3 AND STRUCTURAL STEEL NOTE 2.
- (C) REPAIR GIRDER BOTTOM FLANGE, SEE DETAIL C3 AND STRUCTURAL STEEL NOTE 2.
- (D) REPAIR END CROSS FRAME EXISTING WATER MAIN SUPPORT, SEE DETAIL D3 AND STRUCTURAL STEEL NOTE 2.
- (E) REPAIR END CROSS FRAME TELEPHONE DUCTS SUPPORT, SEE DETAIL E3 AND STRUCTURAL STEEL NOTE 2.
- (F) STRENGTHEN END CROSS FRAME DIAGONALS, SEE DETAIL F3 AND STRUCTURAL STEEL NOTE 1.
- (G) REMOVE EXISTING WATER MAIN SUPPORT, SEE DETAIL G3.
- (H) INSTALL PLATE TO COVER EXISTING ANCHOR BOLT HOLES ON BOTTOM FLANGE, SEE DETAIL H3 AND STRUCTURAL STEEL NOTE 2.

NOTES:
1. REMOVE EXISTING BEARING KEEPER ANGLE PRIOR TO PERFORMING REPAIR DETAIL "C3" OR REPLACING EXISTING BEARING ASSEMBLY.
2. SEE STEEL FRAMING DETERMINATION NOTES.

STRUCTURAL STEEL NOTES

1. STRUCTURAL STEEL (LOW ALLOY) FOR GIRDER G1 INCLUDING INTERMEDIATE AND END CROSS FRAMES, BEVELED SOLE PLATES AND GIRDERS G2-G15 JACKING STIFFENERS, END CROSS FRAME DIAGONAL STRENGTHENING ANGLES, SHIM PLATES AND WEEP PIPE SUPPORT BRACKETS SHALL CONFORM TO AASHTO M270, GRADE 50T2 AND SHALL BE PAID UNDER ITEM "STRUCTURAL STEEL (SITE NO. 1)", SEE SPECIAL PROVISIONS.
2. STRUCTURAL STEEL (LOW ALLOY) FOR GIRDER WEB, BEARING STIFFENER, BOTTOM FLANGE, END CROSS FRAMES AND UTILITY SUPPORT REPAIRS SHALL CONFORM TO AASHTO M270, GRADE 50 AND SHALL BE PAID UNDER ITEM "STRUCTURAL STEEL REPAIRS (SITE NO. 1)", SEE SPECIAL PROVISIONS.
3. STRUCTURAL STEEL (LOW ALLOY) FOR PROPOSED WATER MAIN SUPPORTS SHALL CONFORM TO AASHTO M270 GRADE 50 AND GALVANIZED IN ACCORDANCE WITH ASTM A123 AND SHALL BE PAID UNDER ITEM "WATER MAIN SUPPORT SYSTEM", SEE SPECIAL PROVISIONS.
4. WELDING DETAILS, PROCEDURES AND TESTING METHODS SHALL CONFORM TO THE CURRENT ANSI/AASTHO/AWS D1.5 BRIDGE WELDING CODE, UNLESS OTHERWISE NOTED ON THE PLANS.
5. FIELD SPLICES WILL NOT BE ALLOWED EXCEPT WITH THE WRITTEN PERMISSION OF THE ENGINEER PRIOR TO THE SUBMISSION OF THE SHOP PLANS. IF ALLOWED, THESE SPLICES SHALL BE DESIGNED BY THE CONTRACTOR AND APPROVED BY THE ENGINEER. THE COST OF THESE SPLICES, INCLUDING THE COST OF DESIGN, SHALL BE AT NO EXTRA EXPENSE TO THE STATE.
6. ALL WEB TO FLANGE, WEB TO BEARING/JACKING STIFFENER AND BEARING/JACKING STIFFENER TO FLANGE FILLET WELDS AT GIRDER G1 AND GIRDERS G2-G15 WEB TO JACKING STIFFENER AND JACKING STIFFENER TO FLANGE FILLET WELDS SHALL BE INSPECTED BY THE MAGNETIC PARTICLE METHOD.
7. MULTIPLE PASS WELDS, INSPECTED BY THE MAGNETIC PARTICLE METHOD SHALL HAVE EACH PASS OR LAYER INSPECTED AND ACCEPTED BEFORE PROCEEDING TO THE NEXT PASS OR LAYER, AS DETERMINED BY THE ENGINEER.
8. SHOP WEB SPLICES SHALL BE LOCATED WITHIN THE MIDDLE THIRD OF THE SPAN.
9. SHOP FLANGE SPLICES SHALL BE LOCATED A MINIMUM OF SIX INCHES FROM WEB SPLICES.
10. FLANGE OR WEB SPLICES SHALL BE LOCATED A MINIMUM OF SIX INCHES FROM STIFFENERS AND CONNECTION PLATES.
11. WELDING ELECTRODES SHALL HAVE THE SAME CORROSION RESISTANCE AS THE BASE METAL.
12. BEARING STIFFENERS AND ENDS OF GIRDERS SHALL BE VERTICAL AFTER THE APPLICATION OF FULL DEAD LOADS.
13. THE STRUCTURAL STEEL FABRICATORS SHALL BE CERTIFIED UNDER THE AISC QUALITY CONTROL PROGRAM, "CATEGORY MBr - MAJOR STEEL BRIDGES".
14. ALL FABRICATED STRUCTURAL STEEL SHALL BE ASSEMBLED AND MATCH MARKED IN THE SHOP BEFORE SHIPPING.
15. THE CONTRACTOR SHALL TAKE THE PROPER PRECAUTIONS TO ENSURE THE STABILITY OF ALL STRUCTURE ELEMENTS UNTIL THE TOTAL STRUCTURE IS IN BEING.
16. ALL BOLTS SHALL BE ASTM A325 7/8" DIA. IN 5/8" DIA. HOLES, UNLESS NOTED OTHERWISE. (1) BOLTS SHALL CONFORM TO TYPE 1 AND BE MECHANICALLY GALVANIZED IN ACCORDANCE WITH ASTM B695, CLASS 50.
17. BOLTED CONNECTIONS SHALL BE "SLIP CRITICAL" CONNECTION WITH CLASS "B" SURFACE CONDITIONS.
18. GIRDER G1 SHALL BE CAMBERED TO THE AMOUNTS SHOWN ON THE PLANS, AND AT THE TIME AND PLACE OF ERECTION, SHALL HAVE THE REQUIRED AMOUNT OF CAMBER.

FRAMING PLAN NOTES

1. ALL DIMENSIONS ARE HORIZONTAL AND MEASURED ALONG THE CENTERLINE OF THE WEB.
2. BEARING STIFFENERS AND JACKING STIFFENERS SHALL BE PROVIDED ON BOTH SIDES OF THE WEB FOR GIRDER G1.
3. CONNECTION PLATES AND TRANSVERSE INTERMEDIATE STIFFENERS SHALL BE PROVIDED ON INSIDE FACE ONLY FOR GIRDER G1.
4. CONNECT PROPOSED INTERMEDIATE CROSS FRAMES TO EXISTING TRANSVERSE INTERMEDIATE STIFFENERS ON GIRDER G2. SPACING OF INTERMEDIATE CROSS FRAMES SHOWN ARE APPROXIMATE. CONTRACTOR SHALL FIELD VERIFY TRANSVERSE INTERMEDIATE STIFFENER LOCATIONS ON GIRDER G2 PRIOR TO DEVELOPING STEEL SHOP DRAWING.
5. CONNECT PROPOSED WATER MAIN SUPPORTS TYPES A AND C TO EXISTING TRANSVERSE INTERMEDIATE STIFFENERS ON GIRDERS G2 AND G3. SPACING OF WATER MAIN SUPPORTS TYPE A AND C SHOWN ARE APPROXIMATE. CONTRACTOR SHALL FIELD VERIFY TRANSVERSE INTERMEDIATE STIFFENER LOCATIONS ON GIRDERS G2 AND G3 PRIOR TO DEVELOPING STEEL SHOP DRAWING. NOTIFY THE ENGINEER IF THE TRANSVERSE INTERMEDIATE STIFFENERS LOCATED ON GIRDERS G2 AND G3 DO NOT ALIGN TO PERMIT EACH END OF THE WATER MAIN SUPPORT TYPE A AND C TO BE CONNECTED TO AN EXISTING TRANSVERSE INTERMEDIATE STIFFENER.
6. TEMPORARY BRACING BETWEEN MEDIAN GIRDERS G8 & G9 SHALL BE DESIGNED BY THE CONTRACTOR WITH A 25'-0" MAX. SPACING TO SUPPORT MEDIAN GIRDERS AND DECK CARRY VEHICULAR TRAFFIC DURING STAGED CONSTRUCTION AND INSTALLED DURING PRE-STAGE 1 CONSTRUCTION . THE TEMPORARY BRACING SHALL BE REMOVED DURING STAGE 3 CONSTRUCTION PRIOR TO PERMANENT CONSTRUCTION. THE COST OF DESIGN, INSTALLATION AND REMOVAL SHALL BE PAID UNDER THE ITEM "STEEL GRID DECKING", SEE SPECIAL PROVISIONS.

PAINTING NOTES

1. THE ENDS OF EXISTING GIRDERS AND END CROSS FRAMES (IN THEIR ENTIRETY) SHALL BE CLEANED AND PAINTED IN ACCORDANCE WITH THE SPECIFICATION "ABRASIVE BLAST CLEANING AND FIELD PAINTING OF BEAM ENDS (SITE NO. 1)", SEE SPECIAL PROVISIONS. THE CONTAINMENT FOR THE PAINTING SHALL BE PAID UNDER THE ITEM "CLASS 1 CONTAINMENT AND COLLECTION OF SURFACE PREPARATION DEBRIS (SITE NO. 1), SEE SPECIAL PROVISIONS. DISPOSAL OF LEAD DEBRIS SHALL BE PAID UNDER THE ITEM "DISPOSAL OF LEAD DEBRIS FROM ABRASIVE BLAST CLEANING", SEE SPECIAL PROVISIONS.
2. CLEANING AND PAINTING OF AREAS IDENTIFIED BY THE ENGINEER, OTHER THAN THE ENDS OF EXISTING GIRDERS AND END CROSS FRAMES, SHALL BE PAID UNDER THE ITEM "LOCALIZED PAINT REMOVAL AND FIELD PAINTING OF EXISTING STEEL", SEE SPECIAL PROVISIONS. DISPOSAL OF LEAD DEBRIS SHALL BE PAID UNDER THE ITEM "DISPOSAL OF LEAD DEBRIS FROM ABRASIVE BLAST CLEANING", SEE SPECIAL PROVISIONS.
3. PAINT AND DEBRIS COLLECTED FROM PAINT REMOVAL SHALL BE STORED ABOVE THE 100-YEAR FLOOD ELEVATION.
4. THE 8,000 SQUARE FEET OF ESTIMATED SURFACE AREA OF EXISTING GIRDERS AND END CROSS FRAMES TO BE CLEANED & PAINTED IS APPROXIMATE. THE CONTRACTOR SHALL SURVEY THE EXISTING BRIDGE STRUCTURE AND REVIEW THE EXISTING PLANS TO FAMILIARIZE HIMSELF WITH THE AREA TO BE CLEANED AND PAINTED.

ESTIMATED WEIGHT OF STRUCTURAL STEEL = 1250 CWT

NOTE: THE ESTIMATED WEIGHT OF STRUCTURAL STEEL IS PROVIDED FOR INFORMATION ONLY.

STEEL FRAMING DETERIORATION NOTES

1. THE REPAIR LOCATIONS DEPICTED ON THE FRAMING PLAN ARE BASED ON LIMITED INFORMATION OBTAINED FROM BRIDGE SAFETY INSPECTION REPORT (2011). THE INFORMATION IS INTENDED TO BE USED AS A GUIDE AND DOES NOT NECESSARILY REFLECT THE CURRENT CONDITION OF THE STRUCTURE. THE EXACT LOCATION AND LIMITS OF DETERIORATED STEEL TO BE REPAIRED SHALL BE DELINEATED BY THE ENGINEER DURING CONSTRUCTION.
2. NO STEEL REPAIRS SHALL BE PERFORMED WITHOUT THE PRIOR APPROVAL OF THE ENGINEER.
3. REPAIR WORK SHALL BE PERFORMED IN ACCORDANCE WITH THE SUGGESTED SEQUENCE OF STEEL REPAIRS.

REFERENCES

1. SEE DWG NOS. S-23 FOR GIRDER G1 DETAILS.
2. SEE DWG. NO. S-24 FOR PROPOSED INTERMEDIATE AND END CROSS FRAME AND TRANSVERSE INTERMEDIATE STIFFENER DETAILS.
3. SEE DWG. NO. S-25 FOR EXISTING GIRDER STEEL REPAIR DETAILS B3 AND H3 AND SUGGESTED SEQUENCE OF STEEL REPAIRS.
4. SEE DWG. NOS. S-26 FOR EXISTING GIRDER STEEL REPAIR DETAILS A3 AND E3.
5. SEE DWG. NO. S-27 FOR EXISTING GIRDER STEEL REPAIR DETAILS C3, D3, F3, G3 AND J3 AND WEEP PIPE SUPPORT BRACKET DETAIL.
6. SEE DWG. S-28 FOR JACKING ASSEMBLY DETAILS.
7. SEE DWG. NO. S-29 FOR STEEL-LAMINATED ELASTOMERIC BEARING DETAILS.
8. SEE DWG. NO. W-1 AND W-2 FOR PROPOSED TYPES A, B, AND C WATER MAIN SUPPORT DETAILS.

ADDENDUM NO. 1

REV.	DATE	REVISION DESCRIPTION	SHEET NO.
1	12/13/13	ADDED NOTE	04.23

Filename: SB_Br00947_Framingplan.A1.dgn — Border Version: 6/1/05

THE INFORMATION, INCLUDING ESTIMATED QUANTITIES OF WORK, SHOWN ON THESE SHEETS IS BASED ON LIMITED INVESTIGATIONS BY THE STATE AND IS IN NO WAY WARRANTED TO INDICATE THE CONDITIONS OF ACTUAL QUANTITIES OF WORK WHICH WILL BE REQUIRED.

DESIGNER/DRAFTER: T.STRNAD / S.ERDAS
CHECKED BY: A. SESHADRI
SCALE AS NOTED

STATE OF CONNECTICUT
DEPARTMENT OF TRANSPORTATION

ENGINEER: DEWBERRY ENGINEERS INC.
APPROVED BY: -
DATE:

Dewberry
50 Elm Street, Suite 101
New Haven, CT 06510-2047

PROJECT TITLE: REHABILITATION OF BRIDGE NO. 00947 ROUTE 34 OVER NAUGATUCK RIVER

TOWN: DERBY

DRAWING TITLE: FRAMING PLAN

PROJECT NO. 36-182
DRAWING NO. S-22
SHEET NO. 04.23.A1