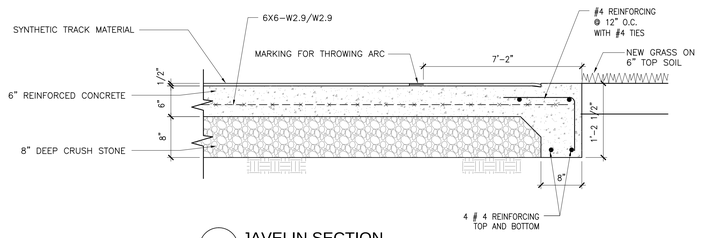

10 JAVELIN SECTION
SCALE: 1"= 1'-0"

NOTES:

1. ALL FACILITIES & EQUIPMENT MUST COMPLY WITH THE LATEST NCAA REGULATIONS AND THE IAAF TRACK AND FIELD FACILITIES MANUAL.
2. ALL TRACK AND FIELD ITEMS MUST MATCH ADJACENT AREAS FINISH GRADE ELEVATIONS AND SLOPES. SEE FINISH GRADE PLAN FOR THEIR LOCATIONS.
3. FOLLOW MANUFACTURER'S INSTALLATION INSTRUCTIONS FOR ALL THE ITEMS SHOWN ON THE DRAWINGS.
4. ITEMS DIMENSIONS ARE SHOWN IN METRIC AND IMPERIAL (FEET AND INCHES) FOR CONTRACTOR'S CONVENIENCE. IN CASE OF DISCREPANCY, METRIC DIMENSIONS OVERRIDES IMPERIAL DIMENSIONS PER NCAA AND IAAF REGULATIONS.
5. PROVIDE SHOP DRAWINGS AND CATALOG CUT SHEETS FOR REVIEW AND APPROVAL.
6. WHEN COLOR SELECTION IS REQUIRED, THE COLOR IS TO BE DETERMINED BY CCSU.

IMPORTANT:
CONCRETE 4000 PSI TYPICAL FOR ALL CONCRETE WORK

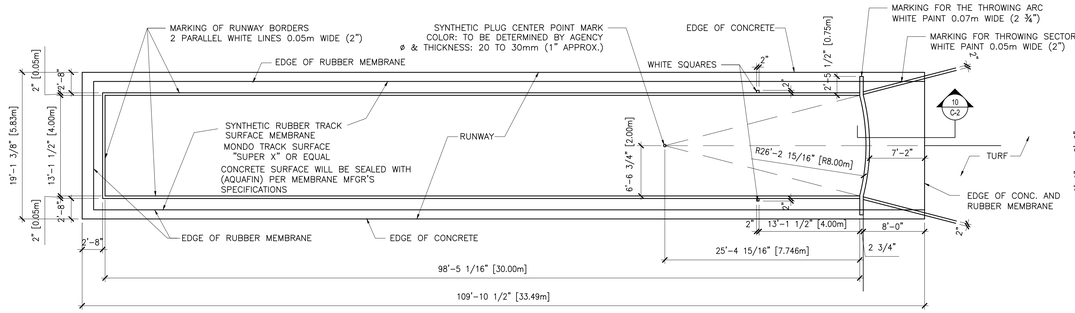

9 JAVELIN RUNWAY AND THROW AREA
SCALE: 1/8"= 1'-0"

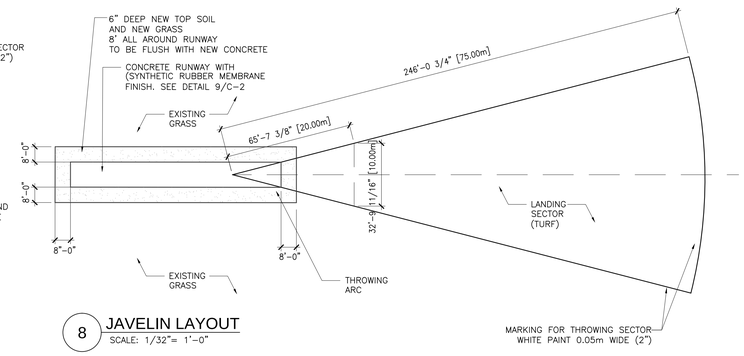

8 JAVELIN LAYOUT
SCALE: 1/32"= 1'-0"

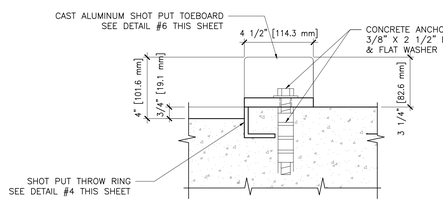

7 SECTION - SHOT PUT STOP BOARD
SCALE: 3"= 1'-0"

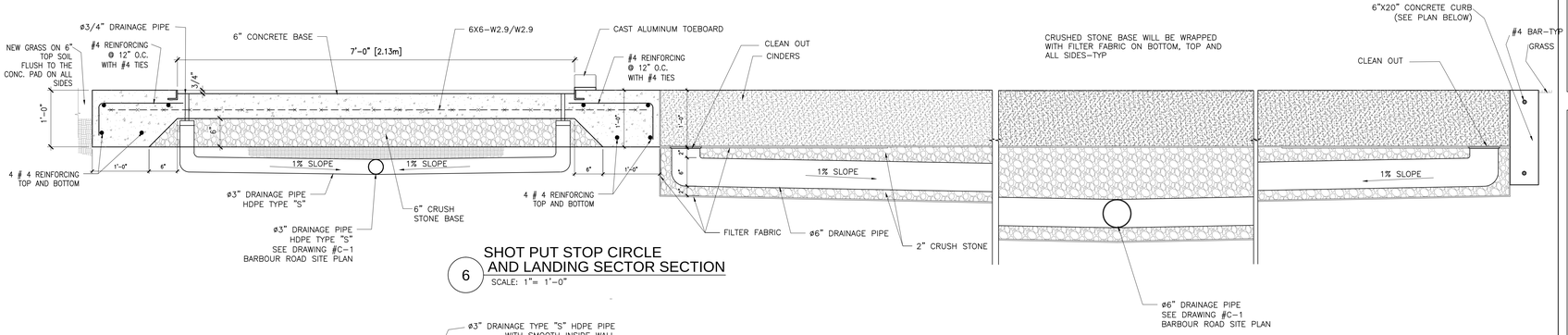

6 SHOT PUT STOP CIRCLE AND LANDING SECTOR SECTION
SCALE: 1"= 1'-0"

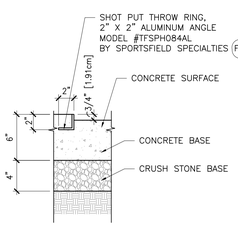

5 SECTION - SHOT PUT STOP CIRCLE
SCALE: 1 1/2"= 1'-0"

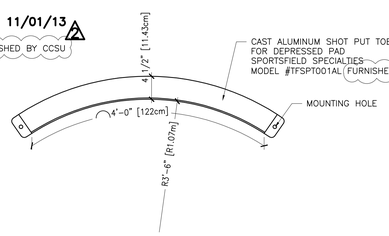

4 SHOT PUT STOP BOARD
SCALE: 1"= 1'-0"

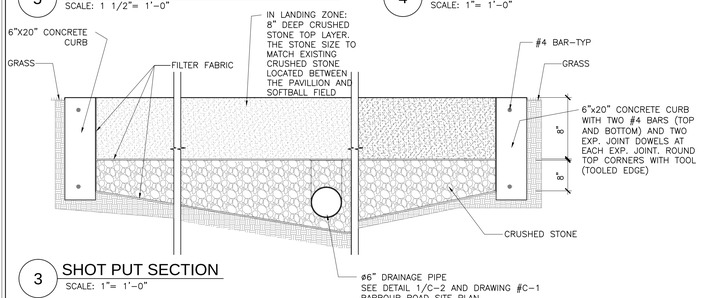

3 SHOT PUT SECTION
SCALE: 1"= 1'-0"

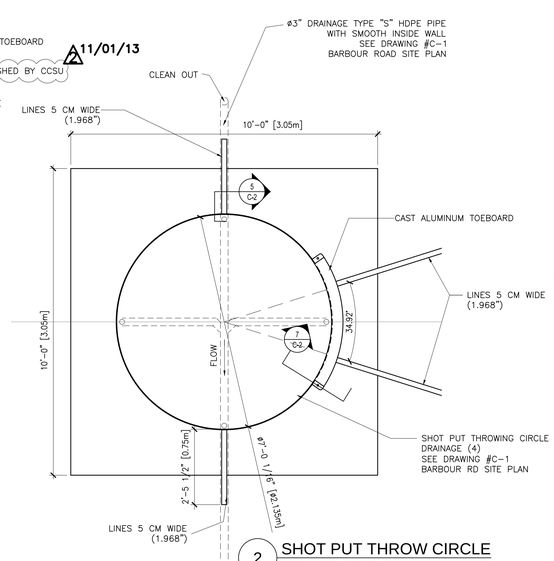

2 SHOT PUT THROW CIRCLE
SCALE: 1/2"= 1'-0"

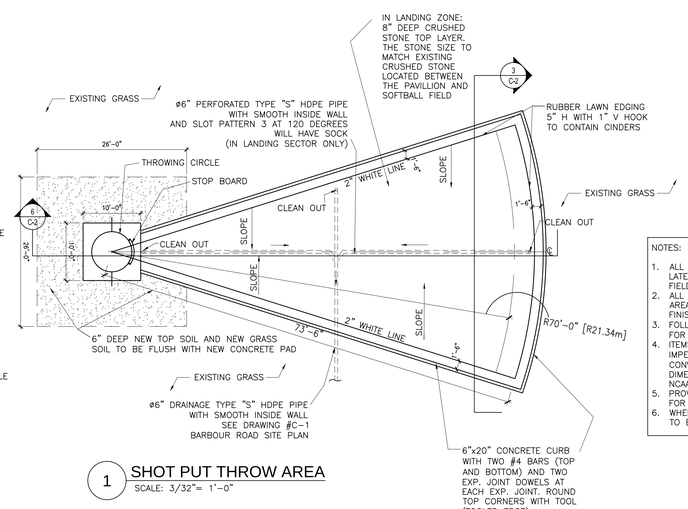

1 SHOT PUT THROW AREA
SCALE: 3/32"= 1'-0"

NOTES:

1. ALL FACILITIES & EQUIPMENT MUST COMPLY WITH THE LATEST NCAA REGULATIONS AND THE IAAF TRACK AND FIELD FACILITIES MANUAL.
2. ALL TRACK AND FIELD ITEMS MUST MATCH ADJACENT AREAS FINISH GRADE ELEVATIONS AND SLOPES. SEE FINISH GRADE PLAN FOR THEIR LOCATIONS.
3. FOLLOW MANUFACTURER'S INSTALLATION INSTRUCTIONS FOR ALL THE ITEMS SHOWN ON THE DRAWINGS.
4. ITEMS DIMENSIONS ARE SHOWN IN METRIC AND IMPERIAL (FEET AND INCHES) FOR CONTRACTOR'S CONVENIENCE. IN CASE OF DISCREPANCY, METRIC DIMENSIONS OVERRIDES IMPERIAL DIMENSIONS PER NCAA AND IAAF REGULATIONS.
5. PROVIDE SHOP DRAWINGS AND CATALOG CUT SHEETS FOR REVIEW AND APPROVAL.
6. WHEN COLOR SELECTION IS REQUIRED, THE COLOR IS TO BE DETERMINED BY CCSU.

Central Connecticut State University

1615 Stanley Street
New Britain, CT 06050

REVISIONS

NUMBER	DATE	DESCRIPTION
#1	08/20/13	SHOT PUT TOE BOARD UPD.
#2	11/01/13	SHOT PUT RING & TOEBOARD

BARBOUR ROAD FIELD

ATHLETIC FACILTIES

REVISED:: 10/22/2013
REVISED:: 11/03/2003

KEY PLAN
NOT TO SCALE

CCSU PROJECT No.:	32-K
DPW PROJECT No.:	N.A.
DRAWN BY:	ANS
DATE:	09/30/13
CAD FILE:	P:\...\C-2.DWG

SHOT PUT AND JAVELIN PLANS, DETAILS AND NOTES

BUILDING No.:	DRAWING No.:
32	C-2