TABLE OF CONTENTS OF SPECIAL PROVISIONS

Note: This Table of Contents has been prepared for the convenience of those using this contract with the sole express purpose of locating quickly the information contained herein; and no claims shall arise due to omissions, additions, deletions, etc., as this Table of Contents shall not be considered part of the contract.

Table of Contents

CONTRACT TIME AND LIQUIDATED DAMAGES 5
NOTICE TO CONTRACTOR – COORDINATION FOR WORK BY 6
OTHER PARTIES 6
NOTICE TO CONTRACTOR - CONNECTICUT DEPARTMENT OF 7
TRANSPORTATION DISCLAIMER 7
NOTICE TO CONTRACTOR - TRAFFIC DRUMS AND TRAFFIC CONES 8
NOTICE TO CONTRACTOR – ENVIRONMENTAL INVESTIGATIONS 9
NOTICE TO CONTRACTOR – HAZARDOUS MATERIALS INVESTIGATIONS 12
NOTICE TO CONTRACTOR - NCHRP 350 REQ. FOR WORK ZONE 13
TRAFFIC CONTROL DEVICES 13
NOTICE TO CONTRACTOR - REVISED SECTIONS 6.01 AND M.03 14
NOTICE TO CONTRACTOR - PAINTING REQUIREMENTS 15
NOTICE TO CONTRACTOR - WORK ON RAILROAD PROPERTY 16
NOTICE TO CONTRACTOR - VOLUNTARY PARTNERING 18
NOTICE TO CONTRACTOR - RIGHTS OF WAY RESTRICTIONS 19
NOTICE TO CONTRACTOR - REVISED SECTIONS 6.01 AND M.03 20
SECTION 1.02 – PROPOSAL REQUIREMENTS AND CONDITIONS 21
SECTION 1.03 - AWARD AND EXECUTION OF CONTRACT 22
SECTION 1.04 - SCOPE OF WORK 26
SECTION 1.05 -CONTROL OF THE WORK 27
SECTION 1.07 - LEGAL RELATIONS AND RESPONSIBILITIES 43
SECTION 1.08 - PROSECUTION AND PROGRESS 44
SECTION 1.09 - MEASUREMENT AND PAYMENT 49
SECTION 4.06 - BITUMINOUS CONCRETE 52
SECTION 6.01 CONCRETE FOR STRUCTURES 76
SECTION M.03 PORTLAND CEMENT CONCRETE 102
ON-THE-JOB TRAINING (OJT) WORKFORCE DEVELOPMENT PILOT: 149
D.B.E. SUBCONTRACTORS AND MATERIAL SUPPLIERS OR 153
MANUFACTURERS 153
ITEM #0020903A – LEAD COMPLIANCE FOR MISCELLANEOUS 165
EXTERIOR TASKS 165
ITEM #0062680A - TACTILE WARNING STRIP 181
ITEM #0063521A – RAIL FACILITY UPGRADE (SITE NO. 1) 182
ITEM #0090061A - ERECTION / REMOVAL CYCLE - BRIDGE PLATE 183
ITEM #0100500A - CONSTRUCTION COMMUNICATION EQUIPMENT 186
ITEM #0100600A - CONSTRUCTION ACCESS 188
ITEM #0101000A – ENVIRONMENTAL HEALTH AND SAFETY 193
ITEM #0201001A – CLEARING AND GRUBBING 207
ITEM #0201013A – REMOVAL OF EXISTING FENCE 208
ITEM #NO. 0202315A - DISPOSAL OF CONTROLLED MATERIALS 209
ITEM #0202513A- REMOVAL OF CONCRETE SIDEWALK 217
ITEM #0202530A REMOVAL OF BITUMINOUS SIDEWALK 218
ITEM #0202533A REMOVAL OF EXISTING CURBING 219
ITEM #0202629A – SETTLEMENT MONITORING PROGRAM 220
ITEM #0207150A – LIGHTWEIGHT FILL 223
ITEM #0213901A – BALLAST 225
ITEM #0213902A – SUB-BALLAST 231
ITEM #0213904A – BALLAST MAT 234
ITEM #0216000A – PERVIOUS STRUCTURE BACKFILL 238
ITEM #0406005A – PAVEMENT REPLACEMENT PERMANENT 240
ITEM #0406270A - MILLING OF BITUMINOUS CONCRETE (0” TO 6”) 245
ITEM #0406999A - ASPHALT ADJUSTMENT COST 249
ITEM #0502182A - RUBBER GRADE CROSSING 252
ITEM #0502235A - LIGHTED PEDESTRIAN SIDEWALK ENCLOSURES 259
ITEM #0503151A - REMOVAL OF SUPERSTRUCTURE (SITE NO. 1) 260
ITEM #0503152A - REMOVAL OF SUPERSTRUCTURE (SITE NO. 2) 262
ITEM #0506017A - RETAINING WALL 264

ITEM #0507188A -HYDRODYNAMIC SEPARATOR \(SITE NO. 1\) 284
ITEM #0507190A – OUTLET CONTROL STRUCTURE.....307
ITEM #0512016A – 8” HALF-ROUND STEEL DRAINAGE PIPE.....308
ITEM #0521021A - STEEL-LAMINATED ELASTOMERIC BEARINGS 309
ITEM #0601000A – CLASS A CONCRETE 314
ITEM #0601019A – CHEMICALLY STAINED CONCRETE 315
ITEM #0601088A – CONCRETE FORM LINERS 317
ITEM #0601108A – CONCRETE STAIRS.....321
ITEM #0601980A – PRECAST CONCRETE PLATFORM – TYPE 1 (10’ WIDE) 323
ITEM #0601981A – PRECAST CONCRETE PLATFORM – TYPE 2 (8’ WIDE) 323
ITEM #0602936A – DRILLING AND GROUTING REINFORCING BARS 326
ITEM #0603061A – STRUCTURAL STEEL (SITE NO. 1) 328
ITEM #0603062A – STRUCTURAL STEEL (SITE NO. 2) 336
ITEM #0603371A– MATERIALS FOR STRUCTURAL STEEL (SITE NO. 1) 344
ITEM #0603372A– MATERIALS FOR STRUCTURAL STEEL (SITE NO. 2) 348
ITEM #0603881A – TEMPORARY SUPPORT SYSTEM (SITE NO. 1) 352
ITEM #0661106A – SAFETY WALK.....355
ITEM #0707013A – RAILROAD DECK WATERPROOFING 357
ITEM #0714045A – TEMPORARY SOLDIER PILE AND LAGGING (RAILROAD) 364
ITEM #0751821A – 6” STRUCTURE UNDERDRAIN 366
ITEM #0811005A- CONCRETE WHEEL STOP.....367
ITEM #0914001A – METAL HANDRAIL.....368
ITEM #0914050A – REMOVE HANDRAIL 370
ITEM #0921001A - CONCRETE SIDEWALK.....371
ITEM #0947207A – BICYCLE RACK 373
ITEM #0969000A - PROJECT COORDINATOR.....374
ITEM #0969064A - CONSTRUCTION FIELD OFFICE, LARGE 384
ITEM #0970006A - TRAFFICPERSON (MUNICIPAL POLICE OFFICER) 395
ITEM #0970007A - TRAFFICPERSON (UNIFORMED FLAGGER) 395
ITEM #0971001A – MAINTENANCE AND PROTECTION OF TRAFFIC 398
ITEM #0974001A – REMOVAL OF EXISTING MASONRY 422
ITEM #0975004A - MOBILIZATION AND PROJECT CLOSEOUT 423
ITEM #0979003A - CONSTRUCTION BARRICADE TYPE III 425
ITEM #0980001A – CONSTRUCTION STAKING 426
ITEM #1002110A - LIGHT POLE BASE.....429
ITEM #1003380A- DECORATIVE LIGHT POLE AND FIXTURE TYPE A3 431
ITEM #1003382A - DECORATIVE LIGHT POLE AND FIXTURE TYPE A2-3 431
ITEM #1003383A - DECORATIVE LIGHT POLE AND FIXTURE TYPE AU3.....431
ITEM #1003384A - DECORATIVE LIGHT POLE AND FIXTURE TYPE UU23.....431
ITEM #1003385A - DECORATIVE LIGHT FIXTURE TYPE WM3.....431
ITEM #1003386A - DECORATIVE LIGHT FIXTURE TYPE WM4.....431
ITEM #1003387A - DECORATIVE LIGHT FIXTURE TYPE SL1 431
ITEM #1003906A - REMOVE LIGHT STANDARD.....439
ITEM #1003917A - REMOVE WOOD POLE.....441
ITEM #1006199A - UNDER DECK LIGHTING CONTACTOR 442
ITEM #1015034A - GROUNDING AND BONDING.....445
ITEM #1016001A - PHOTO ELECTRIC CONTROL 451
ITEM #1017050A – SERVICE RELOCATION.....453
ITEM #1020030A - TEMPORARY ILLUMINATION UNIT 454
ITEM #1206023A - REMOVAL AND RELOCATION OF EXISTING SIGNS 455
ITEM #1210101A – 4” (100mm) WHITE EPOXY RESIN PAVEMENT 457
MARKINGS.....457
ITEM #1210102A – 4” (100mm) YELLOW EPOXY RESIN PAVEMENT 457
MARKINGS.....457
ITEM #1210105A – EPOXY RESIN PAVEMENT MARKINGS, SYMBOLS 457
AND LEGENDS 457
ITEM #1220013A – CONSTRUCTION SIGNS - BRIGHT FLUORESCENT 458
SHEETING 458

TABLE OF CONTENTS - CSI FORMAT SPECIFICATIONS SECTION 462

JANUARY 15, 2014
FEDERAL AID PROJECT NO's. CT-05-0107 & CT-90-X510
STATE PROJECT NO. 301-092

REHABILITATION OF METRO-NORTH RAILROAD BRIDGE NO. 03948R OVER SOUND BEACH AVENUE AND BRIDGE NO. 03955R OVER TOMAC AVENUE

Town of Greenwich
Federal Aid Project No's. CT-05-0107 & CT-90-X510

The State of Connecticut, Department of Transportation, Standard Specifications for Roads, Bridges and Incidental Construction, Form 816, 2004, as revised by the Supplemental Specifications dated July 2013 (otherwise referred to collectively as "ConnDOT Form 816") is hereby made part of this contract, as modified by the Special Provisions contained herein. The State of Connecticut Department of Transportation's "Construction Contract Bidding and Award Manual" ("Manual"), May 14, 2010 edition or latest issue, is hereby made part of this contract. If the provisions of this Manual conflict with provisions of other Department documents (not including statutes or regulations), the provisions of the Manual will govern. The Manual is available upon request from the Transportation Manager of Contracts. The Special Provisions relate in particular to the Rehabilitation of Metro-North Railroad Bridge No. 03948R over Sound Beach Avenue and Bridge No. 03955R over Tomac Avenue in the Town(s) of Greenwich.

CONTRACT TIME AND LIQUIDATED DAMAGES

One Thousand and Sixty Nine (1,069) calendar days will be allowed for completion of the work on this project and the liquidated damages charge to apply will be assessed at **Eleven Thousand Dollars ($11,000) per calendar day**.

Construction of the bridges shall be performed concurrently as shown in the contract. Work shall progress as depicted on the construction staging plans. All necessary work must be completed in each Stage, prior to advancing to the next Stage.

Furthermore, all work in the Mobilization Stage of the Project shall be completed, a detailed Critical Path Baseline Schedule for all contract work as specified in Item #0969000A – Project Coordinator shall have been submitted and approved, prior to advancing to Stage 1A.

NOTICE TO CONTRACTOR – COORDINATION FOR WORK BY OTHER PARTIES

The station improvements require work to be performed by both the Contractor and other parties including Metro-North Railroad, and utilities. Coordination will be required between the Contractor, Metro-North Railroad (MNR), and utilities to stage the construction while minimizing disruption of normal activities at this station throughout the project. Key activities requiring coordination between parties and responsibilities for these activities are noted below. Other activities may also require coordination by the Contractor.

OLD GREENWICH STATION

Removal & Disposal of Light Poles and Fixtures: Contractor
Relocations of trash and recycling bins: Contractor
Installation of new trash and recycling bins: Contractor
Replacement of Platform PA system except for final connections: Contractor
Final connections for Platform PA system: MNR
Removal & Disposal of electrical service cabinets: Contractor
Installation/Final Connection of new wiring for DLC cabinet: MNR
Installation/Final Connection of new wiring for PA cabinet: MNR
Replacement of Platform Railroad Telephone System except for final connections: Contractor
Final connections for Platform Railroad Telephone System: MNR
Replacement of Platform VMS System except for final connections: Contractor
Final connections for Platform VMS System: MNR
Installation of new Lighting, Power System & Wiring: Contractor
New Electrical Pads for Electrical Equipment: Contractor
Removal & Disposal of existing Grounding and Bonding System: Contractor
Installation of Grounding and Bonding System: Contractor
Removal & Disposal of utility poles: Contractor
Removal & Disposal of shelters: Contractor
Removal & Disposal of pay phone pedestal: Contractor
Supply Bridge Plates: MNR
Delivery and erection of existing Bridge Plates: Contractor
Supply Rubber Crossing Pads: Contractor
Install Rubber Crossing Pads: MNR

The Contractor shall coordinate the removal of the existing electrical service and installation of the new service with Northeast Utilities (NU), Connecticut Light and Power (CL&P). A minimum of 30 days lead-time shall be provided to NU.

NOTICE TO CONTRACTOR - CONNECTICUT DEPARTMENT OF TRANSPORTATION DISCLAIMER

Connecticut Department of Transportation bidding and other information and documents which are obtained through the Internet or other sources, not authorized by the Department, are not to be construed to be official information for the purposes of bidding or conducting other business with the Department.

It is the responsibility of each bidder and all other interested parties to obtain all bidding related information and documents from authorized official sources of the Department, such as, the Department of Administrative Services (DAS) State Contracting Portal and Bid Express (bidx.com).

Persons and/or entities which reproduce and/or make such information available by any means are not authorized by the Department to do so and may be liable for claims resulting from the dissemination of unofficial, incomplete and/or inaccurate information.

NOTICE TO CONTRACTOR - TRAFFIC DRUMS AND TRAFFIC CONES

Traffic Drums and 42-inch (1 m) Traffic Cones shall have four six-inch (150 mm) wide stripes (two - white and two - orange) of flexible bright fluorescent sheeting.

The material for the stripes shall be one of the following, or approved equal:

- 3M Scotchlite Diamond Grade Flexible Work Zone Sheeting, Model 3910 for the white stripes and Model 3914 for the orange stripes,

- Avery Dennison WR-7100 Series Reboundable Prismatic Sheeting, Model WR-7100 for the white stripes and Model WR-7114 for the orange stripes.

NOTICE TO CONTRACTOR – ENVIRONMENTAL INVESTIGATIONS

An environmental site investigation has been conducted that involved the sampling and laboratory analysis of soil collected from various locations and depths within the Project limits. Based on the findings of the environmental investigation, four (4) soil Areas of Environmental Concern (AOECs) exist within the Project limits. The Contractor is hereby notified that Controlled Material (soil) within the AOECs will require special management and/or disposal procedures.

The DEEP groundwater classification for the project corridor is "GA". Groundwater was not encountered during the environmental investigation.

Results of the environmental investigation indicated the presence of polynuclear aromatic hydrocarbons (PAHs), total arsenic, and leachable lead at concentrations exceeding the applicable State of Connecticut Department of Energy & Environmental Protection (DEEP) Remediation Standard Regulations (RSRs) numeric criteria in soil within the Project limits. Soil within AOECs 1 and 3 contains concentrations of PAHs and lead exceeding the criteria, soil within AOEC 2 contains concentrations of lead exceeding the criteria, and soil within AOEC 4 contains concentrations of PAHs, arsenic, and lead exceeding the criteria.

All suitable Controlled Material excavated from a soil AOEC may be reused only in the AOEC from which it was excavated or another AOEC with similar contaminants, as determined by the Engineer. Controlled Material that is to be reused within an AOEC must be reused in accordance with certain restrictions, as described below.

In addition, the remaining project area is deemed to be a "Low Level" Area of Environmental Concern (LLAOEC), where regulated compounds were detected at concentrations below the RSR numeric criteria. The presence of regulated compounds in soil within the LLAOEC will not require material handling measures beyond those required for normal construction operations. Soil excavated within the LLAOEC may be reused at any location within the proposed Project limits with certain restrictions, as described below.

Soil within the AOECs and the LLAOEC is to be reused on-site prior to the use of other soil and/or fill such that the quantity of soil requiring off-site disposal that is generated from the AOECs and the LLAOEC is minimized.

To the extent possible, suitable Controlled Material excavated within the soil **AOECs** shall be utilized as fill/backfill within its originating AOEC or another AOEC with similar contaminants, as determined by the Engineer. To the extent possible, suitable material excavated within the **LLAOEC** shall be utilized as fill/backfill at any location within the Project limits.

Controlled Material reused within an AOEC, or LLAOEC soil reused within the Project limits, shall be reused in accordance with the following conditions: (1) such soil is deemed to be

structurally suitable for use as fill by the Engineer, (2) such soil is not placed below the water table, and 3) such soil is not placed in an area subject to erosion.

Excess or unsuitable Controlled Materials requiring off-site disposal shall be loaded directly into vehicles for immediate transport to the Contractor-selected disposal facility. Controlled Materials shall not be stockpiled within the Project limits, unless otherwise directed by the Engineer.

It is anticipated that the Contractor shall be able to excavate, load, and transport all Controlled Materials requiring off-site disposal directly from the Project site AOEC(s) and LLAOEC. No delay claim will be considered based upon the Contractor's failure to select facility(s) with enough capacity handle the anticipated volume of Controlled Materials being generated by its activities.

Contractor Take Note: Waste characterization of the Controlled Material will be completed by the Engineer prior to the start of any work. The Engineer will provide the Contractor with the waste characterization analytical data. The Contractor shall utilize the waste characterization analytical data to obtain acceptance of the Controlled Material for disposal at the facility selected by the Contractor from the list of approved facilities provided in Item No. 0202315A – Disposal of Controlled Materials before beginning excavation.

The Contractor will be required to implement appropriate health and safety measures for all construction activities to be performed within the AOECs. These measures shall include, but are not limited to, air monitoring, engineering controls, personal protective equipment and decontamination, equipment decontamination, and personnel training. WORKER HEALTH AND SAFETY PROTOCOLS WHICH ADDRESS POTENTIAL AND/OR ACTUAL RISK OF EXPOSURE TO SITE SPECIFIC HAZARDS IS SOLELY THE RESPONSIBILITY OF THE CONTRACTOR.

The Sections which shall be reviewed by the Contractor include, but are not limited to, the following:

- Item No. 0101000A – Environmental Health and Safety
- Item No. 0202315A – Disposal of Controlled Materials
- Item No. 0101133A – Disposal of Contaminated Railroad Ties

The Contractor is alerted to the fact that a Department environmental consultant will be on site for excavation activities within the AOECs and the LLAOEC to collect soil samples (if necessary) and to observe site conditions for the State.

Information pertaining to the results of the environmental investigation discussed can be found in the document listed below. This document shall be available for review at the Office of Contracts, 2800 Berlin Turnpike, Newington, Connecticut.

Field Cod

- Task 210 Subsurface Site Investigation Report, Proposed Reconstruction of Metro North Bridges Over Tomac and Sound Beach Avenues, Greenwich, Connecticut. Tetra Tech Rizzo, Inc., February 2009.

Field Cod

NOTICE TO CONTRACTOR – HAZARDOUS MATERIALS INVESTIGATIONS

Lead based paint (LBP) is presumed to be present on the painted surfaces of the bridge components scheduled for impact.

Any painted non-metallic debris and/or paint waste to be generated is presumed as RCRA hazardous waste (>5.0 mg/l).

All steel and metal generated from the miscellaneous exterior work tasks (painted or not) shall be segregated and recycled as scrap metal at a scrap metal recycling facility. The recycling of scrap metal (regardless of lead paint concentration) is exempt from USEPA RCRA and CTDEEP Hazardous Waste Regulation.

The Contractor is hereby notified that these hazardous materials requiring special management or disposal procedures will be encountered during various construction activities conducted within the project limits. The Contractor will be required to implement appropriate health and safety measures for all construction activities impacting these materials. These measures shall include, but are not limited to, air monitoring, engineering controls, personal protective equipment and decontamination, equipment decontamination and personnel training. WORKER HEALTH AND SAFETY PROTOCOLS WHICH ADDRESS POTENTIAL AND/OR ACTUAL RISK OF EXPOSURE TO SITE SPECIFIC HAZARDS ARE SOLELY THE RESPONSIBILITY OF THE CONTRACTOR.

The Department, as Generator, will provide an authorized representative to sign all manifests and waste profile documentation required by disposal facilities for disposal of hazardous materials.

The Sections which shall be reviewed by the Contractor include, but are not limited to, the following:

- Item No. 0020903A – Lead Compliance for Miscellaneous Exterior Tasks

The Contractor is alerted to the fact that a Department environmental consultant may be on site for abatement and related activities, to collect environmental samples (if necessary), and to observe site conditions for the State.

NOTICE TO CONTRACTOR - NCHRP 350 REQ. FOR WORK ZONE TRAFFIC CONTROL DEVICES

CATEGORY 1 DEVICES (traffic cones, traffic drums, tubular markers, flexible delineator posts)

Prior to using the Category 1 Devices on the project, the Contractor shall submit to the Engineer a copy of the manufacturer's self-certification that the devices conform to NCHRP Report 350.

CATEGORY 2 DEVICES (construction barricades, construction signs and portable sign supports)

Prior to using Category 2 Devices on the project, the Contractor shall submit to the Engineer a copy of the Letter of Acceptance issued by the FHWA to the manufacturer documenting that the devices (both sign and portable support tested together) conform to NCHRP Report 350 (TL-3).

Specific requirements for these devices are included in the Special Provisions.

Information regarding NCHRP Report 350 devices may be found at the following web sites:

FHWA: http://safety.fhwa.dot.gov/roadway_dept/road_hardware/index.htm

ATSSA: http://www.atssa.com/resources/NCHRP350Crashtesting.asp

NOTE: The portable wooden sign supports that have been traditionally used by most contractors in the State of Connecticut do NOT meet NCHRP Report 350 criteria and shall not be utilized on any project advertised after October 01, 2000.

CATEGORY 3 DEVICES (Truck-Mounted Attenuators & Work Zone Crash Cushions)

Prior to using Category 3 Devices on the project, the Contractor shall submit to the Engineer a copy of the Letter of Acceptance issued by the FHWA to the manufacturer documenting that the devices conform to NCHRP Report 350.

NOTICE TO CONTRACTOR - REVISED SECTIONS 6.01 AND M.03

This contract contains Special Provisions that replace Section 6.01 - *Concrete for Structures* and Section M.03 - *Portland Cement Concrete* in their entireties. Other Standard Specifications, Supplemental Specifications or Special Provisions may contain references to Articles or Subarticles from previous versions of Sections 6.01 and M.03 which are no longer valid.

Any references to Articles beginning with "6.01" or "M.03" shall refer to the pertinent topic or materials in the new Special Provisions contained herein.

NOTICE TO CONTRACTOR - PAINTING REQUIREMENTS

All painting contractors and painting subcontractors to be used for lead paint removal, containment and collection, surface preparation, or coating of structural steel must have been certified by the Society for Protective Coatings (SSPC) Painting Contractor Certification Program (PCCP), QP-1 and QP-2, before the day of bid opening. This certification must be full and not interim. The painting contractors and painting subcontractors must remain so certified for the duration of the project. If a contractor's or subcontractor's certification expires, the painting firm will not be allowed to perform any work until the certification is reissued. Requests for extension of time for any delay to the completion of the project due to an inactive certification will not be considered and liquidated damages will apply. At the option of the Engineer, if such a delay continues for more than 60 calendar days, the Department may engage another SSPC certified contractor to perform the painting work at the prime contractor's expense.

NOTICE TO CONTRACTOR - WORK ON RAILROAD PROPERTY

The Contractor acknowledges that work to be accomplished under this Contract is to be performed on Railroad territory, which consists of territory operated by Metro-North Commuter Railroad (Railroad). The Contractor's work must be accomplished simultaneously with ongoing daily railroad operations. Such operations include, but are not limited to, the passage of trains, storage of trains, flagging, inspection, repair, construction, reconstruction, and maintenance of the railroad right-of-way and facilities.

The Contractor is advised that the Railroad controls all activity in their respective right-of-way, and the Department expects that these conditions may cause delays and possibly a complete suspension of construction activity. If the Contractor is delayed or suspended in the completion of the work by railroad operations, the Contractor will be entitled to a time extension for every day that he can demonstrate that the delays affected the completion date of the contract. This extension of time will be considered non-compensable. The Contractor will not be entitled to any additional compensation for damages incurred for all direct and indirect costs including, but not limited to, all delay and impact costs, and inefficiencies as a result of railroad operational delays.

Additionally, the Contractor is advised, that this contract contains periods reserved exclusively for work that must be performed by the Railroad and the contractor will not be allowed on the tracks or to interfere with Railroad while that work is conducted. The Railroad shall notify the Engineer upon completion of their work and the Engineer shall notify the contractor when work may resume.

The Contractor shall be responsible for the coordination of the work of his various subcontractors. The Contractor shall coordinate his operations with those of the Railroad Company in carrying out railroad force account work.

The Contractor's employees, and the employees of all subcontractors, who will be entering the jobsite within railroad territory, must undergo a railroad safety training class, of approximately one hour, offered by the Railroad. The Engineer will arrange for the class; however, the Contractor is responsible for insuring that all employees on the jobsite have been trained. No additional compensation will be allowed to the Contractor for employees time for attending these classes. Refer to the special provisions and to Article 1.05.06 entitled "Cooperation with Utilities (Including Railroads)."

The Contractor must make his own arrangements with the Railroad for the use of railroad equipment or changes in railroad facilities made solely to facilitate the Contractor's operations. The expense incurred by making such arrangements shall not be a part of this contract.

All matters requiring Railroad Company approval or coordination shall be directed to:

Mr. David Willard
Assistant Director - Capital Projects
Metro-North Railroad Company
525 Water Street, 3rd Floor
Bridgeport, CT 06601

GENERAL INSURANCE INFORMATION FOR THE NEW HAVEN LINE:

For the purpose of complying with Section 1.03, the following information is provided:

Normal speed of passenger trains is **75 mph** in the area of the work. Normal speed of freight is **40 mph** in the area of the work.

In the Old Greenwich area, there are in a 24 hour weekday period:

(243) Scheduled Metro-North Passenger Trains
(4) Extra Trains
(41) Amtrak Trains
(3) Freight Trains

NOTICE TO CONTRACTOR - VOLUNTARY PARTNERING

The Connecticut Department of Transportation (ConnDOT) intends to encourage the foundation of a cohesive partnership with the Contractor and its principal subcontractors on this project. This partnership will be structured to draw on the strengths of each organization to identify and achieve reciprocal goals. The objectives are effective and efficient contract performance and completion within budget, on schedule, and in accordance with plans and specifications.

This partnership will be bilateral in makeup, and participation will be totally voluntary. Any cost associated with effectuating this partnering will be agreed to by both parties and will be shared equally.

To implement this partner initiative, the Contractor and ConnDOT will meet and plan a partnering development seminar/team building workshop. At this planning session arrangements will be made to determine attendees at the workshop, agenda of the workshop, duration and location. Persons required to be in attendance will be the ConnDOT District Engineer and key project personnel, the Contractor's on-site project manager and key supervision personnel of both the prime and principal subcontractors. The project design engineers and key local government personnel will also be required to have Regional/District and Corporate/State level managers on the project team.

Follow-up workshops will be held periodically throughout the duration of the Contract as agreed by the Contractor and ConnDOT.

The establishment of a partnership charter on a project will not change the legal relationship of the parties to the Contract nor relieve either party from any of the terms of the Contract.

ConnDOT and the Contractor will jointly select a facilitator to conduct the partnering workshops. The Contractor will obtain the services of the chosen facilitator and ConnDOT will reimburse the Contractor for fifty percent (50%) of the costs agreed to between ConnDOT and the Contractor.

NOTICE TO CONTRACTOR - RIGHTS OF WAY RESTRICTIONS

The Contractor is hereby advised that at the time of advertising for bids not all the property may be acquired by the State, certain residences and/or business establishments had not been vacated, and asbestos removal by others from buildings to be disposed of had not been completed. A complete listing of the affected properties and the anticipated dates that they will become available is hereinafter provided. The Contractor is further advised that limitations, as enumerated herein below, are imposed which may interfere with the physical construction of the project. Following are statements which will set forth the restrictions on the right of entrance to property and conditions governing construction of the project.

1) The Contractor shall not occupy properties that are unacquired, perform any work thereon, or inhibit access thereto until the properties have been acquired and right of possession has been obtained. If the Contractor is allowed to proceed with the physical construction of the project, no action will be taken that will result in unnecessary inconvenience such as the discontinuance of utilities, the prevention of ingress and egress to the property, or will result in disproportionate injury or any action coercive in nature to occupants of residences (businesses, farms, or non-profit organization) who have not yet moved from the right-of-way.

2) It should be anticipated that each of the properties listed herein may be considered to have an effect upon construction operations.

3) The Contractor shall be aware that extensions of time will be granted, if necessary, for delays in construction operations caused by continued occupancy of residences, properties being unacquired or asbestos abatement concluding beyond the estimated time period.

The following is a complete listing of properties which have not been acquired, vacated and asbestos abated as of January 15, 2014 with the anticipated dates such properties will be acquired and/or vacated and abated.

DESCRIPTION: ***Drainage Right-of-way***
SERIAL NO.: ***301-092-1B***
PROPERTY OWNER: ***Town of Greenwich***
ANTICIPATED COMPLETION DATE: ***March 31, 2014***

NOTICE TO CONTRACTOR - REVISED SECTIONS 6.01 AND M.03

This contract contains Special Provisions that replace Section 6.01 - *Concrete for Structures* and Section M.03 - *Portland Cement Concrete* in their entireties. Other Standard Specifications, Supplemental Specifications or Special Provisions may contain references to Articles or Subarticles from previous versions of Sections 6.01 and M.03 which are no longer valid.

Any references to Articles beginning with "6.01" or "M.03" shall refer to the pertinent topic or materials in the new Special Provisions contained herein.

SECTION 1.02 – PROPOSAL REQUIREMENTS AND CONDITIONS

Article 1.02.04 – Examination of Plans, Specifications, Special Provisions and Site of Work:

Replace the third sentence of the last paragraph with:

The Department cannot ensure a response to inquiries received later than ten (10) days prior to the original scheduled opening of the related bid.

SECTION 1.03 - AWARD AND EXECUTION OF CONTRACT

Article 1.03.07 – Insurance - is supplemented as follows:

Add the following to the first paragraph:

"In addition, the contractor is required to file certificates of insurance with Metro-North Commuter Railroad at least 30 days prior to commencing any work within the Railroad right-of-way. Certificates are to be sent to: Mr. Richard Webster, Risk Analyst, Metro-North Railroad Risk and Insurance Management Department, 2 Broadway, 21st floor, New York, NY, 10004."

Add the following paragraphs after the first paragraph:

"The Contractor is warned that he will not be allowed on the railroad property by the Railroad Company if there are outstanding charges remaining against the contractor for Railroad Services rendered on prior projects. No request for an extension of time will be considered as a result of any delay to the Contractor's operations caused by the Contractor's indebtedness to the railroad. It is agreed that providing of any conductors, flagmen, or other employees shall not relieve the contractor from liability or payment for any damages caused by his operations.

If any insurance specified within this Article shall be provided on a claims-made basis, then in addition to coverage requirements, such policy shall provide that:

1) The policy retroactive date must coincide with or precede the Contractor's start of work (including subsequent policies purchased as renewals or replacements),
2) The Contractor will make every effort to maintain similar insurance for at least two years following project completion,
3) If insurance is terminated for any reason, the Contractor agrees to purchase an extended reporting provision of at least two years to report claims arising from Work performed in connection with this Contract, and,
4) The policy must allow for reporting of circumstances or incidents that might give rise to future claims.

"The Contractor shall assume any and all deductibles in the described insurance policies contained herein. The Contractor’s insurers shall have no right of recovery or subrogation against the State or the Railroad and the described insurance shall be primary coverage.”

For coverage provided as per Article 1.03.07, Subarticle 2, 3, 5, and 6 as amended herein, the State shall be named as additional insured."

In Subarticle 1 - Worker's Compensation Insurance, after ". . . in accordance with the requirements of State law", add the following: ". . ., or with limits of liability of not less than $1,000,000 for each accident or illness, whichever is greater."

In Subarticle 2 – Commercial General Liability Insurance, delete the end of the first sentence after: ". . . which shall provide coverage . . ." (ie: "for each accident or occurrence . . . . . destruction of property."), and replace with: ". . . which shall provide coverage under this policy, or policies, with limits of liability of not less than $2,000,000 per occurrence, combined single limit for bodily injury, (including disease or death), personal injury and property damage (including loss of use) liability."

Add the following to Subarticle 2 – Commercial General Liability Insurance:

"Products, completed operations, independent Contractors, and contractual liability coverages are to be included and all railroad exclusions are to be deleted. The named as an additional insured with respect to operations to be performed shall be as noted in Subarticle 14."

Add the following to Subarticle 3 - Automobile Liability Insurance:

"A policy is issued to and covering the Contractor's tools and equipment, including automotive equipment used by the Contractor in the work which is the subject of this contract. Coverage shall be on all-risk basis. The State of Connecticut is to be named as an additional insured as respects its interest in the covered property, and the insurance shall include an insurer's waiver of subrogation in favor of each Party insured thereunder."

Revise Subarticle 4 - Owner's and Contractor's Protective Liability Insurance for and in the Name of The State as follows:

In the second sentence, after "aggregate coverage of at least", delete "$2,000,000", and replace with "$3,000,000".

Delete Subarticle 5 - Railroad Protective Liability Insurance, and replace with the following:

"**5. Railroad Protective Liability and Property Damage Liability Insurance:** The Contractor shall carry this insurance with respect to the Project operations it performs, and also those performed by its subcontractors, on ISO/RIMA Form, for and on behalf of (in the name of) those appearing in Subarticle 14. Those entities under Subarticle 14, shall be listed and named as additional insured on all policies taken for this project. The policy shall carry combined single limits for both coverages A and B of not less than $2,000,000 per occurrence for losses arising out of bodily injury or death, and for damage to or destruction of railroad property. "Physical Damage to Property" under the Railroad Protective shall mean the direct and accidental loss of or damage to rolling stock and their contents, mechanical construction equipment or motive power equipment, railroad tracks, roadbed, catenaries, signals, bridges, or buildings.

This policy shall be endorsed to the effect that for the purposes of this insurance, the employees of the Railroad Company, as listed below, shall be considered the same as regular employees of the Contractor: a) Any watchman, flagman, and similar employee who is employed by the Railroad and is specifically assigned or furnished by the Railroad for work in connection with the project, or, b) Any employee of the Railroad while operating the work trains or other equipment assigned to the project by the Railroad and while engaged in the performance of work directly involved in the Contract."

Revise Subarticle 7 – Termination or Change of Insurance as follows:

In the first sentence, after "…notify the Department…", add "and the Railroad…".

Add Subarticle 11 after Subarticle 10, as follows:

"**11. Contractual Liability Insurance:** The Contractor shall provide Insurance to indemnify the State against all claims as described in Article 1.07.10."

Add Subarticle 12 after Subarticle 11, as follows:

"**12. Structural Injury and Builders Risk:** For vertical (building) construction work only, the Contractor shall furnish evidence of insurance to the Department with respect to the operations the Contractor performs, and also those performed by its subcontractors, it carries on its own behalf Structural Injury Insurance providing for a total limit of $1,500,000 for all damages arising out of bodily injuries to or death of all persons in any one accident or occurrence, and, subject to that limit per accident, a total (or aggregate) limit of $3,000,000 for all damages arising out of injury to or destruction of property in any one accident or occurrence. In addition to structural injury coverage for property damages caused by covered perils, the Contractor must carry builder's risk (fire extended coverage) insurance, at a level not less than Fifty Percent (50%) of the Total Bid Amount for this project. Coverage shall be All Risk and on a Completed Value basis, including labor and materials in place, on site, in storage off-site, or in transit. Those entities appearing in Subarticle 14 and the Construction Contractors shall be named as insured with respects to their interests in the property."

Add Subarticle 13 after Subarticle 12, as follows:

"**13. Proof of Insurance:** Upon receipt of written request, the contractor shall furnish to the Railroad, a signed copy of the policy for Contractor's Commercial General Liability Insurance, Protective Liability Insurance and the Railroad Protective Liability Insurance. If any work is subcontracted, the Contractor shall furnish a signed copy of the policy for Contractor's Public Liability Insurance for each subcontractor requested."

Add Subarticle 14 after Subarticle 13, as follows:

"**14. Additional Insured:** Where required by the previous articles, the names of the "Additional Insured" shall be as indicated below:

Metro-North Commuter Railroad
Metropolitan Transportation Authority of New York (MTA)
Connecticut Department of Transportation (ConnDOT), Its Agents and Assigns
CSX Corporation
National Railroad Passenger Corporation (AMTRAK)
Providence and Worcester Railroad Company
Consolidated Railroad Corporation (CONRAIL)

Note: For projects with limits of construction that cross the Connecticut/New York State Line into New York, "American Premier Underwriters" shall also be shown as an additional insured."

SECTION 1.04 - SCOPE OF WORK

Article 1.04.05 – Extra Work:

Add the following after the fourth sentence:

Bonding costs shall not be included in the contractor's compensation request. However, if the contractor incurs or will incur increased bonding costs related to the extra work, the contractor shall request separate compensation for such costs. The contractors request shall be itemized and include a certified statement from the bonding company stating that the value of the work will require an increase in bonding coverage and shall detail the additional costs (within allowable contract amount limitations). If satisfactory substantiation is provided, a new item for increased bonding costs will be incorporated into the contract by means of a construction order.

SECTION 1.05 -CONTROL OF THE WORK

Article 1.05.06—Cooperation with Utilities (Including Railroads) – is supplemented as follows:

Add the following after the last paragraph:

"Special Requirements Regarding Work in Metro-North territory:"

Description:

This section covers authority, definitions, regulatory requirements, traffic regulation and coordination of the Contractor's work schedule with the operation of train service, construction equipment and safety requirements for working within railroad right-of-way, and provisions for storage of materials and equipment and worker safety rules. Subsequent to the Engineer's Pre-construction meeting and prior to commencement to contract activities, a working on the railroad meeting will be held by the Engineer to emphasis these Specifications.

Permission to Enter Upon Railroad Property

Permission is hereby granted to the Contractor to enter property of the State, under the custody and control of the Department and managed by Metro-North Commuter Railroad Company (hereinafter called "Railroad"), a public benefit corporation and subsidiary of Metropolitan Transportation Authority (hereinafter called "MTA"). The purpose of this permission shall be solely for those outlined in this contract and under the following terms and conditions:

I. Location and Access. Permission is hereby granted to the Contractor and its subcontractor(s), if any, to enter the property within the Project Limits identified on the Contract Plans (hereinafter called the "Property").

II. Liability. The Contractor covenants and agrees to at all times indemnify, protect and save harmless the "Additional Insureds", as defined under Article V, from and against any and all losses, damages, detriments, suits, claims, demands, costs, and charges which the "Additional Insureds" may directly or indirectly suffer, sustain, or be subjected to by or on account of the Contractors entry upon, occupancy or use of the Property, or the conduct thereon of the Contractor, its subcontractors, officers, employees, agents or invitees, whether such loss or damage be suffered or sustained by the "Additional Insureds" directly or persons (including employees of "Additional Insureds" or Corporations who may seek to hold the "Additional Insureds" liable therefore), and whether attributable to the fault, failure or negligence of the "Additional Insureds" or otherwise.

III. Consideration. The Contractor will pay to the Railroad, the sum of Zero Dollars ($0.00) for the right to enter upon the Property.

IV. Terms of Permit. The Railroad reserves the right to revoke this permission at any time. Unless subsequently modified, this shall begin with Notice to Proceed and shall end at Contract Completion Date at which time it shall expire automatically. Under no circumstances shall this temporary permission be construed as granting the Contractor any rights, title or interest of any kind or character in, on, or about the land or premises of MTA or Railroad thereafter. The Permittee agrees to notify the Railroad when use of the Property or work is completed.

V. Definitions of Terms and Permissible Abbreviations:

Authority of the Railroad Engineer - This supplements Form 814A, Section 1.05.01 in that all contract work upon or affecting railroad property, right-of-way or facilities, shall also be subject to the approval of the Senior Director, Capital Programs of the Railroad or his duly authorized representative, through coordination with the Engineer.

Additional Insureds - Those individuals or entities appearing under Article 1.03.07, Paragraph 13 of the Specifications.

Conductor/Flagman - A Railroad employee qualified on the Rules of the Operating Department and qualified on the physical characteristics of the portion of the railroad involved. He/she is the contact employee qualified to obtain the use of track. Each conductor/flagman will have the proper flagging equipment, up-to-date Railroad Operating Rules, Timetables and Safety Rules.

Coordination of Work - This supplements Form 814A, Section 1.05.06 in that the Contractor shall be responsible for the coordination of the work of his sub-contractors with respect to the railroad property, right-of-way or facilities.

Groundman - Class "A" employee of the Railroad's Power Department authorized to de-energize/re-energize and ground high tension power lines.

Horizontal Clearance Point - A point 10 feet from the centerline of a track.

Obstruction - An entering of the traffic envelope, also referred to as fouling.

Occupancy - Any use of track other than direct crossing.

On or Adjacent to - shall be interpreted to include space on, above and below the railroad right-of-way operated by the Railroad, as well as space on, above, and below adjacent property which the Railroad determines to affect the safe operations of service.

Qualified Railroad Employee - For the purpose of these specifications, a Qualified Railroad Employee is a Railroad employee qualified to remove track or tracks from service.

Railroad - Whenever the term "Railroad" is used without further qualification, it shall be taken to mean Metro-North Commuter Railroad Company.

Right-of-Way - The limits of railroad property on either side of tracks.

The Safety Rules - All work shall be performed in accordance with rules, regulations, procedures, and safe practices of the Railroad, FRA, OSHA, NESC and all other government agencies having jurisdiction over this project.

Track - The space between the rails plus not less than 4 feet outside each rail.

Traffic Envelope - The area encompassed by the vertical and the horizontal clearance points.

Vertical Clearance Point - A point 22 feet and 6 inches above the top of a running rail unless otherwise authorized by the Railroad.

Use of Track - Obtaining permission from the proper authority of the Railroad for track occupancy.

1 – Requirements for Performing Work on or Adjacent to the Railroad Right-of-Way

(a) General

(1) The Contractor should note that the proposed work involves construction operations on or adjacent to property owned by State and operated by the Railroad. In working near an operating railroad, great care must be exercised and the Railroad's safety rules must be strictly observed.

(2) If while completing the work covered by this contract, the tracks or other facilities of the Railroad are endangered, the Contractor shall immediately do such work as directed by the Railroad through the Engineer to restore safety. Upon failure of the Contractor to carry out such orders immediately, the Railroad may take whatever steps as are necessary to restore safe conditions. The cost and expense to the Railroad of restoring safe conditions, or of any damage to the Railroad's trains, tracks or other facilities caused by the Contractor's or subcontractor's operations, shall be considered a charge against the Contractor and shall be paid for by him, or may be deducted from any monies due or that may become due him under this contract.

(b) Rules and Regulations

(1) Railroad traffic shall be maintained at all times, and the Contractor shall conduct all of his operations on or adjacent to the Railroad right-of-way fully within the rules, regulations, and requirements of the Railroad. The Contractor shall be responsible for acquainting himself with such requirements as the Railroad may demand. The

Contractor shall include in his bid any expenses occasioned by delay or interruption of his work by reason of the operation or maintenance of the Railroad facilities.

(2) The Contractor shall obtain verification of the time and schedule of track occupancy from the Railroad before proceeding with any construction or demolition work on or adjacent to the Railroad right-of-way.

(3) All work to be done on or adjacent to the Railroad right-of-way shall be performed by the Contractor in a manner satisfactory to the Railroad and shall be performed at such times and in such manner as not to interfere with the movement of trains or traffic upon the tracks of the Railroad. The Contractor shall use all necessary care to avoid accidents, damage, delay or interference with the Railroad's trains or property.

(4) If deemed necessary by the Railroad, it may furnish or assign an inspector who will be placed on the work during the time the Contractor or any subcontractor is performing work under the contract on Railroad property.

(5) Before proceeding with any construction of demolition work on or adjacent to the Railroad Right-of-Way, a pre-construction meeting shall be held at which time the Contractor shall submit for approval of the Railroad, plans, computations, and a detailed description of his method and procedure for accomplishing the specific construction work required under this contract, including methods of protecting Railroad traffic. Such approval shall not serve, in any way, to relieve the Contractor of his responsibility for the adequacy and safety of his methods and procedures for conducting the work.

(6) The Contractor shall conduct his work and handle his equipment and materials in such manner that neither fouls a live track or wire line without the written permission of the Railroad.

(7) Equipment shall be considered to be potentially fouling the track when located in such a position that its failure, with or without load, brings the equipment within the traffic envelope. No equipment shall be placed in this position without prior approval of the Railroad.

(8) Equipment of the Contractor to be used:

(A) Equipment of the Contractor to be used adjacent to the tracks shall be in first-class condition so as to fully prevent failures of defective equipment that might cause delay in the operations of trains or damage to Railroad facilities. His equipment shall not be placed or put into operation adjacent to tracks without first obtaining permission from the Railroad. Under no circumstances shall any equipment or materials be placed or stored within 25 feet from the near rail of a track in operation, unless approved, in advance, by the Railroad.

(B) High rail equipment of the Contractor to be used on the tracks shall be subject to prior approval of the Railroad. The equipment must be inspected and approved in advance at the Railroad's facility by Railroad inspectors. The equipment inspection must be renewed every three months.

(C) On track vehicles shall be equipped with a Railroad approved tow bar and coupler. Multiple vehicles shall move in tandem and coupled when directed by the Railroad. Movement of on track vehicles shall proceed only under the direct supervision of a Qualified Railroad Employee.

(9) Materials and equipment belonging to the Contractor shall not be stored on Railroad property without first having obtained permission from the Engineer and Railroad. Such permission will be on the condition that the Engineer and Railroad will not be liable for damage to such materials and equipment from any cause. The Contractor shall keep the tracks adjacent to the site clear of all refuse and debris that may accumulate from his operations and shall leave the Railroad property in the condition existing before the start of his operations.

(10) The Contractor shall coordinate with the Engineer and the Railroad in order to determine the type of protection required to insure safety and continuity of Railroad traffic incidental to the particular methods of operation and equipment to be used on the work.

(11) The Railroad will require protection during all periods when the Contractor is working on, or over, the right-of-way of the Railroad, or as may be found necessary in the opinion of the Railroad. When protection is required, refer to Paragraph 1(g).

(12) It shall be expressly understood that this contract includes no work for which the Railroad is to be billed by the Contractor, and it shall be further understood that the Contractor is not to bill the Railroad for any work which he may perform, unless the Railroad gives a written request that such work be performed at its expense.

(13) Upon completion of the work, and before final payment is made, the Contractor shall remove from within the limits of the Railroad's right-of-way, all machinery, equipment, surplus materials, falsework, rubbish and temporary buildings, and other property of the Contractor/sub-contractor, and shall leave the right-of-way in a condition satisfactory to the Railroad.

(c) **Railroad Protective Services -** will be provided in accordance with the Roadway Worker's Protective Act, Title 49, Part 214, Sub-part C. Railroad protective services will also be performed to insure safe operations of trains when construction work would, in the Railroad's opinion, be a hazard to Railroad operations.

(d) **Definition of Hazard** – the Railroad has furnished the statements quoted below, explaining when they consider a hazard to operations exists:

"Protective services will be required whenever the Contractor is performing work on or adjacent to the Railroad tracks or right-of-way, such as excavating, sheeting, shoring, erection and removal of forms, handling materials, using equipment which by swinging or by failure could foul the track, and when any other type of work being performed, in the opinion of the Railroad, requires such service."

(e) Contractor Requirements for Work Affecting the Railroad

(1) All matters requiring Railroad Company approval or coordination shall be directed to the Engineer or a duly authorized representative thereof, for forwarding to the Railroad Engineer.

(2) Detailed plans and appurtenant data and calculations for any operation which, in the opinion of the Railroad, affect the Railroad, must be submitted to the Engineer or a duly authorized representative thereof, for forwarding to the Railroad Engineer for approval prior to commencement of the work. All plans and calculations submitted must be stamped by a Connecticut registered Professional Engineer.

(3) Permissible Track Outages - are identified in the SECTION 1.08 – PROSECUTION AND PROGRESS – Article 1.08.04 – "Limitation of Operations" - Contractor Requirements for Work Affecting the Railroad contained within the General Provisions of the Contract. The times identified are the times that the track may be removed from service. **If power outages are required, the de-energizing/re-energizing and grounding of the wires will subtract approximately forty-five minutes from the start and forty-five minutes at the end of the indicated outage period for a total of up to ninety minutes.**

(4) The Contractor shall maintain a minimum of 1 foot level shoulder from ends of ties to maintain lateral track support for all excavations and shall not excavate any slope steeper than 1 (vertical) on 2 (horizontal) from the edge of the shoulder. Sheeting shall be required on all excavations where the side of the excavation is intercepted by the Railroad live load influence line. The live load influence line is defined as a line originating at the bottom edge of tie and extending downward at a slope of 1 (vertical) on 1½ (horizontal). Such excavations must be designed to withstand, in addition to all common loads such as soil pressure and hydrostatic pressure, a railroad live load of Cooper E-80.

(5) The Contractor shall be required to design and install protective scaffolding over the right-of-way where, at the sole discretion of the Railroad, such scaffolding is necessary to protect the Railroad from possible falling debris; paint or other materials; to protect personnel working about the right-of-way or to provide a platform for personnel, materials and/or equipment. Said scaffolding shall be designed for live load of 200 pounds per square foot applied uniformly over the

entire structure and a 2 kips concentrated load placed anywhere on the structure. The two loads are not to be applied simultaneously for design purposes.

(6) All excavation area shall be located by the Contractor and inspected by the Railroad for the purpose of determining conflicts with underground facilities. Exploratory trenches, a minimum of 3 feet deep and 15 inches wide in the form of an "H" with outside dimensions matching and outside of sheeting dimensions are to be hand dug, as directed by the railroad. In some locations, excavations may exceed 3 feet in depth. Specialty excavations such as screw anchors, cat pole foundations, etc will require additional trenching to ensure all possible conflicts are located. These trenches are for exploratory purposes only and are to be backfilled and compacted immediately. All work outlined above must be done in the presence of a Railroad inspector.

(7) Cavities adjacent to sheet piling, created by driving of sheet piling, shall be filled with sand and any distributed ballast must be restored and tampered immediately.

(8) Sheet piling shall be cut off at top of tie during construction and at 3 feet below bottom of tie after construction just prior to completion of back filling.

(9) Plans and calculations for sheeting and scaffolding must be submitted to the Engineer for forwarding to the Railroad for approval prior to construction. Further, plans and calculations must be stamped by a Connecticut registered Professional Engineer.

(f) Requirements for Erection, Demolition and Other Rigging Operations On or Adjacent to Railroad Right-of-Way

The Contractor will be required to furnish the following information to the Engineer or a duly authorized representative thereof, for forwarding to the Railroad Engineer for approval prior to the start of any rigging operation over or adjacent to the Railroad right-or-way:

(1) Plan view showing locations of cranes, boom length and rigging operating radii, with delivery or disposal locations shown.

(2) Crane rating sheets showing crane(s) to be adequate for 150% of the lift. Crane and boom nomenclature is to be indicated.

(3) Plans and computations showing weight of pick.

(4) Location plan showing obstructions, indicating that the proposed swing is possible.

(5) Plans showing locations and details of mats, planking or special decking as may be required by the Railroad.

(6) Written statement from crane owner giving the date of last crane condition and safety inspection and the results of said inspection.

(7) Data sheet listing number, type, size and arrangement of slings, spreader bars or other connecting equipment. Include copies of catalog or information sheets of specialized equipment. All such equipment shall be shown adequate to safely carry 150% of the calculated loading.

(8) A complete procedure is to be included, indicating the order of lifts and repositioning or rehitching of the crane or cranes.

(9) Temporary support of any components or intermediate stages is to be shown.

(10) A time schedule of the various stages must be shown, as well as a schedule for the entire lifting procedure.

(11) All erection, demolition and rigging plans and calculations submitted to the Railroad must be stamped by a Connecticut licensed Professional Engineer.

(12) Operations directly on or adjacent to the operating right-of-way will be performed only at times and under conditions specified by the Railroad's representative.

(g) Ordering Protective Personnel

The Railroad will furnish Protective Service Personnel (conductors, flagmen, groundmen, inspectors, maintenance and/or other railroad personnel deemed necessary) to protect the operation of train traffic during the Contractor's construction activities. Railroad Protective Services will also be provided in conformance with the Roadway Worker's Protective Act as stated in Paragraph 1(c). There will be no charge to the Contractor for Railroad Protective Services provided. The providing or failing to provide Protective Services shall not relieve the Contractor from liability or payment for any damage caused by his or his subcontractor's operations conducted in their absence.

(1) The Contractor must obey all instructions from Railroad representatives on the job site promptly. Failure to follow instructions shall be deemed sufficient cause for closing the job site to the Contractor and its employees.

(2) The Railroad will, at its sole discretion, determine the need for and the availability of protective personnel. The Railroad will provide protective personnel to the extent possible considering its operational and maintenance priorities. The Railroad does not guarantee that protective personnel will be available to meet the Contractor's preferred schedule. Further, no work will commence until the assigned Railroad representative affirmatively advises the Contractor that the necessary protective personnel are stationed and that he may proceed.

(3) The assessment of the need for protective services will be based upon a weekly Railroad Construction Coordination Meeting. At these meetings, the Contractor shall provide a Bi-weekly Schedule that will begin on the following Saturday. Based on that schedule, the Railroad will determine the Protective Services required for the two-week period. Protective Services will be reserved for the following week beginning on the Saturday and ordered for the second week of the schedule. It will be the Contractor's responsibility to perform work in accordance with the submitted schedule. Variations from the submitted schedule may result in additional and unnecessary costs to the Engineer, Railroad and Contractor.

(A) The Contractor shall base his operations on a 5 consecutive day work week. The hours of operation during this time shall remain constant. Multiple shifts may be worked.

(B) The Contractor must demonstrate maximum use of Protective Service Personnel ordered. Failure to do so may result in the inability to consistently obtain services.

(C) The Contractor shall be responsible for forwarding all Protective Service requests from his subcontractors and suppliers in his Bi-weekly schedule submittal.

(4) Requests to cancel construction activities, and subsequently the scheduled Protective Service Personnel, will be also submitted at the weekly Railroad Construction Coordination Meeting. At these meetings, the previously scheduled Protective Services for the week beginning on the following Saturday may be cancelled. This will be the only time for cancellation. Once cancelled, no re-ordering of Protective Services for the following week will be allowed.

(5) Weather conditions will be considered the only basis upon which the Railroad will accept the Contractor's cancellation of scheduled work and will only be recognized on items of work which have been clearly identified and determined to be weather dependent in the Contractor's schedule. Activities not presented on the Bi-weekly schedule at the weekly Railroad Construction Coordination Meeting will not be able to commence until it has been inserted into the schedule and presented at the next meeting.

(6) Work that requires the support of Railroad personnel shall not be scheduled on the following days, unless the work is of an emergency nature:

Holiday's Observed:	*Independence Day	*Christmas Day
*New Year's Day	*Labor Day	*NewYear's Eve
*President's Day	*Thanksgiving Day	
*Good Friday	*Day Following Thanksgiving Day	

*Memorial Day *Christmas Eve

* The Saturday and Sunday preceding a Monday holiday.

* The Saturday and Sunday following a Friday holiday.

* The Friday and Monday preceding and following a weekend holiday.

(h) Requirements for Requesting Track Outages

Track outages as described in the plans and specifications must be requested at the weekly Railroad Construction Coordination Meeting.

(1) All procedures, material and equipment must be approved and on site prior to the Railroad accepting the track outage request(s). This applies to all track outage requests.

(2) Track outages will be granted based on need for constructability not for convenience.

(3) The Contractor must demonstrate the maximum use of track outages by coordinating his activities and work so that various elements and multiple activities are performed during approved outages. Failure to consistently utilize track outages may cause the inability to gain approval of future requests for outages.

(4) No new track outages may be initiated the weekend preceding or following these holidays:

Thanksgiving, Christmas and New Year's.

However, long-term continuous outages may extend through these periods.

(i) Catenary and Transmission Systems/Power Outages

(1) Catenary and Transmission Systems - The Contractor shall assume that all the wires on the Railroad Company are energized at all times and must be governed by the restrictions imposed by the Railroad with respect to such electrical circuits. Should it become necessary, in the opinion of the Railroad Engineer to de-energize any wire or wires to insure safety of operation, such wires will be de-energized by the Railroad only during such period that will not interfere with the Railroad’s operation. When the de-energizing and re-energizing of wires is deemed necessary, a representative of the Power Department of the Railroad must be on duty and present to arrange for the same. He will notify the Contractor in writing when the wires have been de-energized and also when said wires are to be re-energized.

(A) The Contractor is advised that the overhead electrification will remain in place for the duration of the entire project, except where called for on the drawings and in the specifications.

(B) Track rails of the Railroad are energized. Particular care must be taken to see that no contact is made between adjoining rails with any material, which is a good conductor of electricity when dry, or material of any nature when wet. Particular care is necessary when any work involving the use of chains, steel rods, cables, pipes, etc., is done. Since the Contractor shall assume the wires and rails of the Railroad will be energized at all times, the Contractor shall require all of his employees, sub-contractors, and others to sign a form similar to the form shown in the Contractor Requirements for Work Affecting the Railroad contained within the General Provisions of the Contract.

(2) Power Outages

(A) Catenary Power Outages - A catenary power outage must be scheduled concurrently with a track outage for the track and is restricted to the same periods as specified in the plans and specifications.

(B) Railroad Power and Signal Distribution Feeder Outages - Outages for feeders can be allowed only during off-peak hours. These outages should be requested at the weekly Railroad Construction Coordination Meeting. One set of power and signal feeders, either the north or south side of the railroad, must remain energized at all times.

NOTE: During peak hours (5:00 a.m. to 10:00 a.m. and 3:30 p.m. to 10:00 p.m., Monday through Friday) of railroad traffic, both the north and south sets of power and signal feeders must be energized.

(j) Safety for Contractor's Employees Working on or Adjacent to the Right-of-Way of the Railroad

(1) Personal Protection Equipment

(A) Approved hard hats, reflectorized vest and clothing must be worn by all Contractor employees while on the Right-of-Way, in yard, shop facilities, and construction and/or work sites. Approved safety eyewear must be worn by all Contractor employees while on Right-of-Way, in yard, shop facilities and construction and/or work sites and in the operating control cab of a moving locomotive or train. Any exclusion must be jointly approved by Railroad's department head and Director of Safety.

(B) Other protective equipment such as goggles, face shields, safety belts, floatation vests, gloves and respirators shall be issued by the Contractor when required.

Protection devices for hearing conservation may be used when determined necessary and safe to do so.

(2) Possession or Use of Intoxicants and Illegal Substances

The use of intoxicants, alcohol, narcotics, marijuana, amphetamines, hallucinogens or other illegal substances while working within the Railroad Right-of-Way, is prohibited and is sufficient cause for immediate removal from the Railroad property. Contractor employees under medication before or while on duty, must be certain that such use will not affect the safe performance of their duties.

(3) Surveying Equipment

(A) Measuring tape must be non-metallic to avoid shunting the signal system electric circuits. This will occur when a metallic object is laid across the top of two rails of any track.

(B) Electrically rated fiberglass elevation rods must be used to avoid injury in the event contact is made with energized catenary or signal/communication lines. Elevations of catenary wires must be obtained by or under direct supervision of a qualified Railroad Groundman.

(4) Conduct On or About Track

(A) Contractor employees must not enter the track envelope unless it is absolutely necessary in performance of their duty. If it is deemed necessary, than the Contractor employees must walk on tracks or cross tracks only when accompanied by or with permission from a Qualified Railroad Employee of the Railroad. Always use approved walkways when available; otherwise identify and take the shortest safe route after looking in both directions. If more than one track is to be crossed, stop and look before crossing each track.

(B) The possession of an umbrella on or about tracks is prohibited.

(C) Do not rest any object on your shoulder while in close proximity to a moving train or high-rail equipment.

(D) Expect equipment to move on any track, in any direction, at any time. Contractor employees must look in both directions and have permission from a Qualified Railroad Employee before:

1. Fouling track
2. Crossing track
3. Going between or around end of equipment or structure

4. Moving out from between or under equipment of structure
5. Getting on or off equipment
6. Performing any other applicable operation

(E) When required by a conductor/flagman or other Qualified Railroad Employee to vacate tracks, the Contractor employees must comply immediately.

(5) Catenary Electric Systems

(A) All overhead wires must be considered energized (LIVE) at all times except when it is known they have been de-energized and properly grounded.

(B) Until the wires are de-energized, properly grounded, and a Groundman has notified that the overhead wires are such, all Contractor employees must not approach within 10 feet of transmission systems wires, catenary system or signal power wires.

(C) At the beginning of each tour of duty, the Groundman will instruct the Contractor foreman and each Contractor employee, in the crew, of the dangers surrounding them, calling their particular attention to any hazards to be avoided in performance of the work.

(D) Whether due to inadequate knowledge of the English language or for any other reason, a Contractor employee who, in the opinion of the Groundman, does not understand the instructions given, shall not be permitted to work or observe.

(E) When clearances have been obtained and the wires, equipment or apparatus properly grounded, the Groundman will indicate to the Contractor foreman and the crew the location of wires, equipment or apparatus from which power has been removed and the location of the grounding devices applied. The Groundman must obtain on standard form, the signature of the Contractor foreman indicating that he and the crew have been so instructed, and will confine their work within the limits as outlined to them by the Groundman.

(F) When the Groundman leaves his crew for any reason, he must notify the Contractor foreman and each person in the crew to stop all work in the vicinity of the wires, personally assuring himself that all persons have moved to a safe distance away from the work area before his departure. The Groundman will obtain the signature of the Contractor foreman on standard form, that he and the crew have been informed that the Groundman is leaving the gang and they will not resume work until advised to do so on return of the Groundman.

(G) When the clearances are to be released, the Groundman will inform the Contractor foreman and each person in the crew and will personally observe that all persons have moved to a safe distance from the wires, equipment or

apparatus to be energized, before removing the grounding devices. The Groundman will obtain the signature of the Contractor foreman, on a standard form, stating that he and the gang have been advised that the wires, equipment or apparatus have been energized, and that they will remain at a safe distance from them until informed otherwise by the Groundman.

(H) The Groundman will inform the Contractor foreman if any Contractor employee on the job is unsafe and will not comply with instructions. If trouble is experienced with the Contractor foreman in maintaining safe working conditions, the Groundman will immediately notify his supervisor.

(6) Aerial Catenary Construction by Qualified Contractor Employees

(A) Aerial catenary work addressed in this Section shall include all overhead wire work shown in the contract.

(B) Aerial catenary work by the Contractor shall be done in accordance with the Railroad's safety rules and in accordance with the National Electric Safety Code. Failure to comply with these rules could result in removal of "Qualified" privileges and or removal from the project.

(C) Due to the specialty nature of the work, limited construction periods available, and high quality of work required, the aerial catenary construction is to be done only by qualified Contractor employees (except as outlined in section (E). Only Contractor employees that meet the requirements of the International Brotherhood of Electrical Worker's standards for Journeyman Lineman and who have successfully completed a Metro-North power orientation class shall be considered a Qualified Employee. The Power orientation class will be given periodically and will require less than one-half day to complete. Approval for qualification shall be determined by Metro-North and that approval shall not be unreasonably withheld.

(D) Metro-North approved Journeyman Lineman shall be issued identification as workers qualified to perform aerial catenary work. Qualified Contractor employees shall work according to the Railroad's MN-290 Electrical Operating Instructions. Metro-North approved Journeyman Lineman are authorized and expected to work within 3 feet of 13.5 kV energized overhead catenary. Contractor employees shall not de-energize circuits, place initial grounds, or provide protection for others.

(E) Apprentice Lineman shall be permitted to assist qualified Journeyman Lineman and work under their direct supervision within the following guidelines:

i. The number of apprentice linemen allowed to work on the catenary will be one less than the total number of Metro-North Railroad Power Department

Class "A" employees assigned to each contractor work operation. Additional groundmen will not be assigned to facilitate the use of Apprentices. (ex. 3,5 men crews are working a section of wire removal under the power outage protection of 2 Metro-North Railroad Power Department Class "A" employees, This contractor work operation can utilize one apprentice lineman.)

ii. No additional track or power outages shall be granted for the protection of apprentice Linemen.

iii. The Apprentice Linemen shall maintain an extended reach minimum approach distance of 10 feet to all railroad transmission wires, Catenary system, and signal power wires until such wires are de-energized, tested for potential, properly grounded, and proper protection afforded by a qualified Power Department Class "A" employee.

iv. The Contractor and his Safety Officer shall enforce the minimum approach distances and submit to the engineer a program to monitor and audit compliance of this procedure.

Apprentice Lineman are prohibited from coming closer than 10 feet from all overhead wires or circuits regardless of whether they have been de-energized or not.

(7) Safety Program and Plan

(A) Prior to the commencement of work the Contractor shall submit a "Working on the Railroad Safety Plan" that will include a Program which implements the plan. The submission shall be made to the Engineer or a duly authorized representative and forwarded to the Railroad for compliance with this specification. This plan is separate to the Health and Safety Plan required for other aspects of the project (i.e., lead, excavations, etc.).

(B) Each employee of the Contractor, subcontractor or others on site shall be given an initial Railroad Safety Training session administered by a Railroad Safety Representative prior to being allowed to work on the project. All employees receiving this training will receive a Registered Hard Hat sticker that will identify them as a trained employees.. No Contractor employees are permitted on the Railroad Right-of-Way without evidence of this training. Contractor employees shall renew this training annually. The training session will be held on the Railroad Right of Way or conducted at a location mutually agreed upon between the Railroad Safety Representative and the Contractor. At this session the following will be furnished to the employee:

1. Safety Orientation for Contractor Employees Working on Railroad Property produced by the Safety Engineer of the Railroad.
2. Safety Inspection Checklist
3. List of the applicable publications referenced in these specifications with respect to safety and where they are located for review if necessary. The list shall include, but not be limited to, such regulatory standards and mandates, i.e., OSHA, NIOSH, DOL, NFPA, EPA, FRA, MSDS, etc.
4. Copy of the applicable corporate safety plan.
5. Copy of the project Railroad Safety Plan or other project related plans.

NOTE: The employee shall sign the standard form for acknowledgement of the above-noted documents.

(C) All contractor employees entering the railroad right-of-way must attend and acknowledge the daily job briefings prior to commencing any work. The qualified railroad employees will conduct the job briefings.

(D) The Contractor shall hold "TOOL BOX" safety meetings for their employees at least once a week that will be documented and attendees listed.

(E) The Contractor supervisor shall attend a monthly Railroad Safety Meeting.

2. Insurance Requirements – Metro-North Railroad

The Contractor engaged in work on the project shall be required to comply with the requirements set forth under Article 1.03.07 – Insurance of the Specifications Form 816, its supplements and special provisions contained herein.

3. Cost Associated with this Specification

(a) There shall be no direct payment for compliance to this specification. All costs associated with any regulatory requirements, traffic regulation, specification administration, coordination, materials and incidentals required to fulfill the requirements of this specification will be considered as included in the general cost of the work and distributed in all items.

(b) Any work, material's supplied, inspections and protective services by the Railroad as described in the plans and specification, expressly needed for the construction of the project, will be compensated to the Railroad by the Engineer under a separate agreement."

SECTION 1.07 - LEGAL RELATIONS AND RESPONSIBILITIES

Article 1.07.10 - Contractor's Duty to Indemnify the State against Claims for Injury or Damage:

Add the following after the only paragraph:

"It is further understood and agreed by the parties hereto, that the Contractor shall not use the defense of Sovereign Immunity in the adjustment of claims or in the defense of any suit, including any suit between the State and the Contractor, unless requested to do so by the State."

SECTION 1.08 - PROSECUTION AND PROGRESS

Replace 1.08.01 – "Transfer of Work or Contract" with the following:

1.08.01—Transfer of Work or Contract: The Contractor shall perform with its own organization Contract work with a value under the Contract of at least 50% of the original total Contract value. If the Contractor sublets, sells, transfers, or otherwise disposes of any part of the Contract work without the Commissioner's prior written consent, the Contractor will not be relieved of any Contractual or other legal responsibility in connection therewith. Such an unauthorized act by the Contractor shall constitute a material breach of the Contract, and the Commissioner may, in such a case, terminate the Contract without further compensation to the Contractor.

The Contractor shall include the following alternative dispute resolution clause in all of its Project subcontracts:

"For any dispute arising out of the agreement between the Contractor and a subcontractor, including claims of late payment or non-payment, which cannot be settled within 60 days of the subcontractor submitting a written claim to the Contractor, either party may bring the dispute before an alternative dispute resolution entity for resolution. If the parties do not agree upon a particular dispute resolution entity for that purpose, the dispute shall be resolved under the auspices and construction arbitration rules of the American Arbitration Association, or under the rules of any other alternative dispute resolution entity approved by the Department either generally or for the specific dispute. The Department may not be made a party to formal arbitration regarding such a dispute. These rights and restrictions may not be waived, and if these provisions are not included in the Contractor's subcontracts for the Project, these provisions shall nonetheless be read into them."

The Contractor shall not knowingly enter into any lower tier transaction on a Department project with any person or entity which, under any federal or state law or regulation, or by voluntary agreement, is currently debarred or disqualified from bidding for construction contracts or participating in construction projects in any jurisdiction within the United States, unless after disclosure of such ineligibility, such participation is authorized by appropriate federal and State authorities, including the Commissioner.

The Contractor shall not sublet, sell, transfer, assign, or otherwise dispose of the Contract or any portion thereof, or of the work provided for therein, or of its right, title, or interest therein, to any individual or entity without the prior written consent of the Commissioner. No payment will be made for any part of the work sublet, sold, transferred, assigned, or otherwise disposed of by the Contractor, prior to the authorization date given in the written consent of the Commissioner. Such an unauthorized act by the Contractor shall constitute a material breach of the Contract, and the Commissioner may, in such a case, terminate the Contract without further compensation to the Contractor.

The Contractor shall pay the subcontractor for work performed within thirty (30) days after the Contractor receives payment for the work performed by the subcontractor. Withholding retainage by the Contractor, subcontractor or lower tier subcontractors is not allowed.

Payment for work that has been performed by a subcontractor does not eliminate the Contractor's responsibilities for all the work as defined in Article 1.07.12, "Contractor's Responsibility for Work."

Payment for work that has been performed by a subcontractor also does not release the subcontractor from its responsibility for maintenance and other periods of subcontractor responsibility specified for the subcontractor's items of work. Failure of a subcontractor to meet its maintenance, warranty and/or defective work responsibilities may result in administrative action on future Department contracts.

For any dispute regarding prompt payment, the alternate dispute resolution provisions of this article shall apply.

The above requirements are also applicable to all sub-tier subcontractors and the above provisions shall be made a part of all subcontract agreements.

Failure of the Contractor to comply with the provisions of this section may result in a finding that the Contractor is non-responsible on future projects.

Article 1.08.04 - Limitation of Operations - Add the following:

Contractor Requirements for Work Affecting the Railroad

In general, unless otherwise authorized by the Railroad, the Contractor's construction activities and operations directly over and/or adjacent to the operating railroad right-of-way can be performed only during the following track outage periods shown below.

Where the availability of four track outages are indicated below, one of the adjacent tracks will not be available to the Contractor and will remain in train service. The adjacent track to remain in train service will be the platform track for each of the passenger stations affected by the outage. During these outages all four tracks will have the catenary de-energized, and diesel train service will be operational through the outage area.

Where the availability of adjacent track outages are indicated in section 1(a) below, only one of the listed adjacent track outages can be used by the Contractor per each track outage request.

1(a). Allowable Track Outages with one track continuously out of service CP229-CP232:

Track Continuously Out of Service	Available Off-Peak Adjacent Track(s)	Track Outages on Adjacent Tracks for Section Outage Period	
4	2	0045 – 0600	
	2,1	0130 – 0500	
	2,1,3	0045 – 0615	Sat and Sun Only
2	4 or 1	0045 – 0600	
	4,1	0130 – 0500	
	4,1,3	0045 – 0615	Sat and Sun Only
1	2 or 3	0030 – 0600	
	2,3	0130 – 0500	
	2,3,4	0045 – 0615	Sat and Sun Only
3	1	0045 – 0600	
	1,2	0130 – 0500	
	1,2,4	0045 – 0615	Sat and Sun Only

Installation and Removal of Bridge Plates:

Bridge plates are to be installed and/or removed only during weekend off-peak night track outages. All bridge plates at all Stations must be completely installed or removed during the outage. For bridge plates on Track 3, the outage will extend from 0015 hrs to 0515 hrs. For bridge plates on Track 4, the outage will extend from 0015 hrs to 0515 hrs.

NOTES:

a. The above outages are not guaranteed by Metro-North Railroad at all times.
b. The Contractor's plan for demolition, erection, and any operation adjacent to or within the Railroad Right of Way shall be submitted to the Engineer for Railroad approval, prior to start of work.
c. No full track and/or power outages will be permitted on weekends either immediately before or after major holidays, nor any weekend between Thanksgiving and New Years day.
d. The track outage periods shown above are the times that the track(s) may be taken out of train service. Refer to Section 1.05.06(1)(e)(3) for additional restrictions regarding power outages requiring de-energizing, grounding and re-energizing of the wires.

2. All work involving rail, ties, and other track components on active tracks, unless specifically designated otherwise within the contract, will be performed by Railroad employees. The contractor may not remove abandoned (out of service) track unless given prior written approval from the Railroad and the Engineer.

3. The Contractor shall assume that the wires and rails of the Railroad will be energized at all times.

Article 1.08.07 - Determination of Contract Time:

Delete the second, third and fourth paragraphs and replace them with the following:

When the contract time is on a calendar day basis, it shall be the number of consecutive calendar days stated in the contract, INCLUDING the time period from December 1 through March 31 of each year. The contract time will begin on the effective date of the Engineer's order to commence work, and it will be computed on a consecutive day basis, including all Saturdays, Sundays, Holidays, and non-work days.

1.08.08 - Extension of Time:

Delete the last paragraph, "If an approved extension of time…. the following April 1".

Article 1.08.09 - Failure to Complete Work on Time:

Delete the second paragraph, "If the last day...the project is substantially completed" *and replace it with* "Liquidated damages as specified in the Contract shall be assessed against the Contractor per calendar day from that day until the date on which the project is substantially completed.".

SECTION 1.09 - MEASUREMENT AND PAYMENT

Article 1.09.04 – Extra and Cost-Plus Work:

Section 1.09.04 (f) - Add the following after the first sentence:

Increases in bonding costs shall not be compensated within any extra work payment. Payment for such costs, if substantiated as outlined in Article 1.04.05, shall be based on a lump sum for actual costs with no additional mark-ups.

Replace 1.09.06 – "Partial Payments" with the following:

1.09.06—Partial Payments:

A. Monthly and Semi-monthly Estimates.

(1) Once each month, the Engineer will make, in writing, current estimates of the value of work performed in accordance with the Contract, calculated at Contract unit prices, including but not limited to the value of materials complete in place and materials not yet incorporated into the Project, but approved by the Engineer for payment (as provided for elsewhere in this article). Retainage will not be held.

Exceptions may be made as follows:

(a) When not in conflict with the interests of the State, the Contractor may request, and the Engineer may make, semi-monthly estimates for payment.

(b) No estimates for payments will be made when, in the judgment of the Engineer, the Project is not proceeding in accordance with the Contract.

(2) The Engineer may also make payment at Contract unit prices for the number of units that represent the value of the Project work performed to date, if said units are essentially, though not totally, complete.

(3) As soon as possible after the final inspection, the apparent final quantities will be sent to the Contractor. The Contractor shall respond in writing within 21 days of receipt by either signing and thus accepting the final quantities or by disagreeing in writing, citing the pay items involved with documentation and justification of such agreement. Failure to respond within the 21 days will be considered as acceptance of the final quantities and the Department may proceed with final payment,

B. Payment for Stored Materials: Non-perishable materials that meet Contract requirements, that have been produced or purchased specifically for incorporation into the Project, and that have been delivered to the Project site or to such location as the Engineer may have approved, but which have not yet been incorporated into the Project, may be included in current estimates at such fraction of the applicable Contract unit price or lump sum price as the Engineer may deem to represent a fair value for the material, if such materials have been paid for by the Contractor as shown by receipted bills or, in lieu of such receipted bill(s), a duly-executed Certification of Title executed by the Contractor and the Vendor in the form approved by the Department. When partial payment is made for stored materials, such materials shall become the property of the State; but such payment shall in no way release the Contractor from its responsibility for the condition, protection and, in case of loss, replacement of such materials, or from any liability resulting in any manner from the presence of such materials wherever they may be stored or kept. All materials shall be stored in accordance with Article 1.06.03 and in accordance with the manufacturer's recommendations. Material test approval by the Department shall be required prior to payment for such materials.

Offsite storage may be approved by the Engineer provided that the materials proposed for payment are segregated from other materials, clearly labeled as being owned by the Department for use on the identified Project, otherwise handled in compliance with Article 1.06.03, and stored in accordance with the manufacturer's recommendations. All such materials must be readily-available for inventory and inspection by the Engineer. Storage outside of the State of Connecticut may be considered only when a representative of the Department is able to verify that the above requirements have been satisfied.

For items requiring extended fabrication, manufacturing or assembly time, the Contractor may propose to the Engineer a schedule of values for the related material costs. If the Engineer approves such a schedule of values, it shall become the Basis of Payment for the stored materials, so long as all other pertinent Contract requirements have been satisfied.

Generic materials having a use on many projects will be considered for payment prior to their incorporation into the Project only if stored in unopened packaging or in large lots. Stock and raw materials will not be considered for such advance payment without the Engineer's prior written consent thereto.

In no case shall material payments exceed the Contract unit price or lump sum price less the actual value of delivery and installation of the materials; if they do exceed such a price, the Engineer reserves the right to reduce any related payment accordingly. Such reductions in payment shall in no way affect the Department's ownership interest in the stored materials.

Replace 1.09.07 – "Final Payment" with the following:

1.09.07—Final Payment: When the Commissioner has accepted the Project, the Engineer will prepare a final payment estimate and a list of final item quantities. The list will include the entire amount of each item of Project work performed, the value thereof, and the amount of all payments made on prior estimates, all such estimated payments being merely partial payments and subject to correction in the calculation of the final payment.

SECTION 4.06 - BITUMINOUS CONCRETE

Section 4.06 is being deleted in its entirety and replaced with the following:

4.06.01—Description
4.06.02—Materials
4.06.03—Construction Methods
4.06.04—Method of Measurement
4.06.05—Basis of Payment

4.06.01—Description: Work under this section shall include the production, delivery and placement of a non-segregated, smooth and dense bituminous concrete mixture brought to proper grade and cross section. This section shall also include the method and construction of longitudinal joints. The Contractor shall furnish ConnDOT with a Quality Control Plan as described in Article 4.06.03.

The terms listed below as used in this specification are defined as:

Bituminous Concrete: A concrete material that uses a bituminous material (typically asphalt) as the binding agent and stone and sand as the principal aggregate components. Bituminous concrete may also contain any of a number of additives engineered to modify specific properties and/or behavior of the concrete material. For the purposes of this Specification, references to bituminous concrete apply to all of its sub-categories, for instance those defined on the basis of production and placement temperatures, such as hot-mix asphalt (HMA) or warm-mix asphalt (WMA), those categories derived from the mix-design procedure used, such as "Marshall" mixes or "Superpave" mixes, or those defined on the basis of composition, such as polymer-modified asphalt (PMA).

Course: A lift or multiple lifts comprised of the same bituminous concrete mixture placed as part of the pavement structure.

Density Lot: All material placed in a single lift and as defined in Article 4.06.03.

Disintegration: Wearing away or fragmentation of the pavement. Disintegration will be evident in the following forms: Polishing, weathering-oxidizing, scaling, spalling, raveling, potholes or loss of material.

Dispute Resolution: A procedure used to resolve conflicts resulting from discrepancies between the Engineer and the Contractor's density results that may affect payment.

Hot Mix Asphalt (HMA): A bituminous concrete mixture typically produced at 325°F.

Lift: An application of a bituminous concrete mixture placed and compacted to a specified thickness in a single paver pass.

Marshall: A bituminous concrete mix design used in mixtures designated as "Bituminous Concrete Class ( )".

Polymer Modified Asphalt (PMA): A bituminous concrete mixture containing a polymer modified asphalt binder in accordance with contract specifications.

Production Lot: All material placed during a continuous daily paving operation.

Quality Assurance (QA): All those planned and systematic actions necessary to provide confidence that a product or facility will perform as designed.

Quality Control (QC): The sum total of activities performed by the vendor (Producer, Manufacturer, and Contractor) to ensure that a product meets contract specification requirements.

Superpave: A bituminous concrete mix design used in mixtures designated as "S*" Where "S" indicates Superpave and * indicates the sieve related to the nominal maximum aggregate size of the mix.

Segregation: A non-uniform distribution of a bituminous concrete mixture in terms of volumetrics, gradation or temperature.

Warm Mix Asphalt (WMA): A bituminous concrete mixture that can be produced and placed at reduced temperatures than HMA using a qualified additive or technology.

4.06.02—Materials: All materials shall conform to the requirements of Section M.04.

1. Materials Supply: The bituminous concrete mixture must be from one source of supply and originate from one Plant unless authorized by the Engineer. Bituminous Concrete plant QC plan requirements are defined in Section M.04.

2. Recycle Option: The Contractor has the option of recycling reclaimed asphalt pavement (RAP) or Crushed Recycled Container Glass (CRCG) in bituminous concrete mixtures in accordance with Section M.04. CRCG shall not be used in the final lift of the surface course.

4.06.03—Construction Methods:

1. Material Documentation: All vendors producing bituminous concrete must have their truck-weighing scales, storage scales, and mixing plant automated to provide a detailed ticket.

Delivery tickets must include the following information:

a. State of Connecticut printed on ticket.
b. Name of producer, identification of plant, and specific storage bin (silo) if used.
c. Date and time of day.

d. Mixture Designation If RAP is used, the plant printouts shall include RAP dry weight, percentage and daily moisture content. If WMA technology is used, the technology and the additive rate or the water injection rate must be noted on the ticket. Class 3 mixtures for machine-placed curbing must state "curb mix only".
e. Net weight of mixture loaded into truck (When RAP is used, RAP moisture shall be excluded from mixture net weight).
f. Gross weight (Either equal to the net weight plus the tare weight or the loaded scale weight).
g. Tare weight of truck – Daily scale weight.
h. Project number, purchase order number, name of Contractor (if Contractor other than Producer).
i. Truck number for specific identification of truck.
j. Individual aggregate, RAP, and virgin asphalt high/target/low weights shall be printed on batch plant tickets (For drum plants and silo loadings, the plant printouts shall be printed out at 5 minute intervals maintained by the vendor for a period of three years after the completion of the project).
k. For every mixture designation the running daily total delivered and sequential load number.

The net weight of mixture loaded into the truck must be equal to the cumulative measured weight of its components.

The Contractor must notify the Engineer immediately if, during the production day, there is a malfunction of the weighing or recording system in the automated plant or truck-weighing scales. Manually written tickets containing all required information will be allowed for one hour, but for no longer, provided that each load is weighed on State-approved scales. At the Engineer's sole discretion, trucks may be approved to leave the plant if a State inspector is present to monitor weighing. If such a malfunction is not fixed within forty-eight hours, mixture will not be approved to leave the plant until the system is fixed to the Engineer's satisfaction. No damages will be considered should the State be unable to provide an inspector at the plant.

The State reserves the right to have an inspector present to monitor batching and /or weighing operations.

2. Transportation of Mixture: Trucks with loads of bituminous concrete being delivered to State projects must not exceed the statutory or permitted load limits referred to as gross vehicle weight (GVW). The Contractor shall furnish a list of all vehicles and allowable weights transporting mixture.

The State reserves the right to check the gross and tare weight of any delivery truck. A variation of 0.4 percent or less in the gross or tare weight shown on the delivery ticket and the certified scale weight shall be considered evidence that the weight shown on the delivery ticket is correct. If the gross or tare weight varies from that shown on the delivery ticket by more than 0.4 percent, the Engineer will recalculate the net weight. The Contractor shall take action to correct discrepancy to the satisfaction of the Engineer.

If a truck delivers mixture to the project and the ticket indicates that the truck is overweight, the load will not be rejected but a "Measured Weight Adjustment" will be taken in accordance with Article 4.06.04.

The mixture shall be transported from the mixing plant in trucks that have previously been cleaned of all foreign material and that have no gaps through which mixture might inadvertently escape. The Contractor shall take care in loading trucks uniformly so that segregation is minimized. Loaded trucks shall be tightly covered with waterproof covers acceptable to the Engineer. Mesh covers are prohibited. The front and rear of the cover must be fastened to minimize air infiltration. The Contractor shall assure that all trucks are in conformance with this specification. Trucks found not to be in conformance shall not be allowed to be loaded until re-inspected to the satisfaction of the Engineer.

Truck body coating and cleaning agents must not have a deleterious effect on the transported mixture. The use of solvents or fuel oil, in any concentration, is strictly prohibited for the coating of the inside of truck bodies. When acceptable coating or agents are applied, truck bodies shall be raised immediately prior to loading to remove any excess agent in an environmentally acceptable manner.

3. Paving Equipment: The Contractor shall have the necessary paving and compaction equipment at the project site to perform the work. All equipment shall be in good working order and any equipment that is worn, defective or inadequate for performance of the work shall be repaired or replaced by the Contractor to the satisfaction of the Engineer. During the paving operation, the use of solvents or fuel oil, in any concentration, is strictly prohibited as a release agent or cleaner on any paving equipment (i.e., rollers, pavers, transfer devices, etc.).

Refueling of equipment is prohibited in any location on the paving project where fuel might come in contact with bituminous concrete mixtures already placed or to be placed. Solvents for use in cleaning mechanical equipment or hand tools shall be stored clear of areas paved or to be paved. Before any such equipment and tools are cleaned, they shall be moved off the paved or to be paved area; and they shall not be returned for use until after they have been allowed to dry.

Pavers: Each paver shall have a receiving hopper with sufficient capacity to provide for a uniform spreading operation and a distribution system that places the mix uniformly, without segregation. The paver shall be equipped with and use a vibratory screed system with heaters or burners. The screed system shall be capable of producing a finished surface of the required evenness and texture without tearing, shoving, or gouging the mixture. Pavers with extendible screed units as part of the system shall have auger extensions and tunnel extenders as necessary. Automatic screed controls for grade and slope shall be used at all times unless otherwise authorized by the Engineer. The controls shall automatically adjust the screed to compensate for irregularities in the preceding course or existing base. The controls shall maintain the proper transverse slope and be readily adjustable, and shall operate from a fixed or moving reference such as a grade wire or floating beam.

Rollers: All rollers shall be self-propelled and designed for compaction of bituminous concrete. Rollers types shall include steel-wheeled, pneumatic or a combination thereof and may be capable of operating in a static or dynamic mode. Rollers that operate in a dynamic mode shall have drums that use a vibratory or oscillatory system or combination of. The vibratory system achieves compaction through vertical amplitude forces. Rollers with this system shall be equipped with indicators that provide the operator with amplitude, frequency and speed settings/readouts to measure the impacts per foot during the compaction process. The oscillatory system achieves compaction through horizontal shear forces. Rollers with this system shall be equipped with frequency indicators. Rollers can operate in the dynamic mode using the oscillatory system on concrete structures such as bridges and catch basins if at the lowest frequency setting.

Pneumatic tire rollers shall be self-propelled and equipped with wide-tread compaction tires capable of exerting an average contact pressure from 60 to 90 pounds per square inch uniformly over the surface, adjusting ballast and tire inflation pressure as required. The Contractor shall furnish evidence regarding tire size; pressure and loading to confirm that the proper contact pressure is being developed and that the loading and contact pressure are uniform for all wheels.

Lighting: For paving operations, which will be performed during hours of darkness, the paving equipment shall be equipped with lighting fixtures as described below, or with approved lighting fixtures of equivalent light output characteristics. A sufficient number of spare lamps shall be available on site as replacements in the event of failures. The Contractor shall provide brackets and hardware for mounting light fixtures and generators to suit the configuration of the rollers and pavers. Mounting brackets and hardware shall provide for secure connection of the fixtures, minimize vibration, and allow for adjustable positioning and aiming of the light fixtures. Lighting shall be aimed to maximize the illumination on each task and minimize glare to passing traffic. The Contractor shall provide generators on rollers and pavers of the type, size, and wattage, to adequately furnish 120 V AC of electric power to operate the specified lighting equipment. A sufficient amount of fuel shall be available on site. There shall be switches to control the lights. Wiring shall be weatherproof and installed to all applicable codes. The minimum lighting requirements are found in tables 4.06-1 and 4.06-2:

Table 4.06-1: Paver Lighting

Fixture	Quantity	Remarks
Type A	3	Mount over screed area
Type B (narrow) or Type C (spot)	2	Aim to auger and guideline
Type B (wide) or Type C (flood)	2	Aim 25 feet behind paving machine

Table 4.06-2: Roller Lighting

Fixture*	Quantity	Remarks
Type B (wide)	2	Aim 50 feet in front of and behind roller
Type B (narrow)	2	Aim 100 feet in front of and behind roller
OR		
Type C (flood)	2	Aim 50 feet in front of and behind roller
Type C (spot)	2	Aim 100 feet in front of and behind roller

*All fixtures shall be mounted above the roller.

Type A: Fluorescent fixture shall be heavy-duty industrial type. It shall be enclosed and sealed to keep out dirt and dampness. It shall be UL listed as suitable for wet locations. The fixture shall contain two 4-foot long lamps - Type "F48T12CWHO". The integral ballast shall be a high power factor, cold weather ballast, and 120 volts for 800 MA HO lamps. The housing shall be aluminum, and the lens shall be acrylic with the lens frame secured to the housing by hinging latches. The fixture shall be horizontal surface mounting, and be made for continuous row installation.

Type B: The floodlight fixture shall be heavy-duty cast aluminum housing, full swivel and tilt mounting, tempered-glass lens, sealed door, reflector to provide a wide distribution or narrow distribution as required, mogul lamp socket for 250 watt Metal Halide lamp, 120 volt integral ballast, and be UL listed as suitable for wet locations.
Type C: The power beam holder shall have ribbed die cast aluminum housing and a clear tempered-glass lens to enclose the fixture. There shall be an arm fully adjustable for aiming, with a male-threaded mount with serrated teeth and lock nuts. There shall be a 120-volt heatproof socket with extended fixture wiring for an "Extended Mogul End Prong" lamp base. The fixture shall have gaskets, and shall be UL listed as suitable for wet locations. The lamps shall be 1000-watt quartz PAR64, both Q1000PAR64MFL (flood) and Q1000PARNSP (spot) will be required.

Material Transfer Vehicle (MTV): A MTV shall be used when placing a bituminous concrete surface course as indicated in the contract documents. A surface course is defined as the total thickness of the same bituminous concrete mix that extends up to and includes the final wearing surface whether it is placed in a single or multiple lifts, and regardless of any time delays between lifts.

The MTV must be a self-propelled vehicle specifically designed for the purpose of delivering the bituminous concrete mixture from the delivery truck to the paver. The MTV must have the capability to remix the bituminous concrete mixture.

The use of a MTV will be subject to the requirements stated in Article 1.07.05- Load Restrictions. The Engineer may limit the use of the vehicle if it is determined that the use of the MTV may damage highway components, utilities, or bridges. The Contractor shall submit to the Engineer at time of pre-construction the following information:

- The make and model of the MTV to be used.
- The individual axle weights and axle spacing for each separate piece of paving equipment (haul vehicle, MTV and paver).
- A working drawing showing the axle spacing in combination with all three pieces of equipment that will comprise the paving echelon.

4. Seasonal Requirements: Paving, including placement of temporary pavements, shall be divided into two seasons, In-Season and Extended Season. In-Season paving shall occur from May 1 – October 14, and Extended Season shall occur from October 15- April 30. The following requirements shall apply unless otherwise authorized or directed by the Engineer:

- Bituminous concrete mixes shall not be placed when the air or subbase temperature is below 40°F regardless of the season.
- Should paving operations be scheduled during the Extended Season, the Contractor's Quality Control Plan for placement described in Section 9. "Contractor Quality Control Plan for Placement" shall include a separate section titled "Extended Season Paving" and address minimum delivered mix temperature, maximum paver speed, enhanced rolling patterns and the method to balance mixture delivery and placement operations. Work covered by the section on Extended Season paving shall not commence until the Engineer's comments have been incorporated into the section and approved.
- Should placement of the final lift of bituminous concrete be scheduled during the Extended Season, the Contractor is required to submit this plan to the Engineer for review 30 days prior to the paving operation.

5. Superpave Test Section: The Engineer may require the Contractor to place a test section whenever the requirements of this specification or Section M.04 are not met.

The Contractor shall submit the quantity of mixture to be placed and the location of the test section for review and acceptance by the Engineer. The equipment used in the construction of a passing test section shall be used throughout production.

If a test section fails to meet specifications, the Contractor shall stop production, make necessary adjustments to the job mix formula, plant operations, or procedures for placement and compaction. The Contractor shall construct test sections, as allowed by the Engineer, until all the required specifications are met. All test sections shall also be subject to removal as set forth in Article 1.06.04.

6. Transitions for Roadway Surface: Transitions shall be formed at any point on the roadway where the pavement surface deviates, vertically, from the uniform longitudinal profile as specified on the plans. Whether formed by milling or by bituminous concrete mixture, all transition lengths shall conform to the criteria below unless otherwise specified.

<u>Permanent Transitions</u>: A permanent transition is defined as any transition that remains as a permanent part of the work. All permanent transitions, leading and trailing ends shall meet the following length requirements:

a) Posted speed limit is greater than 35 MPH: 30 feet per inch of vertical change (thickness)
b) Posted speed limit is 35 MPH or less: 15 feet per inch of vertical change (thickness).
c) Bridge Overpass and underpass transition length will be 75 feet either
  (1) Before and after the bridge expansion joint, or
  (2) Before or after the parapet face of the overpass.

In areas where it is impractical to use the above described permanent transition lengths the use of a shorter permanent transition length may be permitted when approved by the Engineer.

Temporary Transitions: A temporary transition is defined as a transition that does not remain a permanent part of the work. All temporary transitions shall meet the following length requirements:

a) Posted speed limit is greater than 35 MPH
   (1) Leading Transitions = 15 feet per inch of vertical change (thickness)
   (2) Trailing Transitions = 6 feet per inch of vertical change (thickness)

b) Posted speed limit is 35 MPH or less
   (1) Leading and Trailing = 4 feet per inch of vertical change (thickness)

Note: Any temporary transition to be in-place over the winter shutdown period, holidays, or during extended periods of inactivity (more than 7 calendar days) shall conform to the "Permanent Transition" requirements shown above.

7. Spreading and Finishing of Mixture: Prior to the placement of the bituminous concrete, the underlying base course shall be brought to the plan grade and cross section within the allowable tolerance. Immediately before placing the mixture, the area to be surfaced shall be cleaned by sweeping or by other means acceptable to the Engineer. The bituminous concrete mixture shall not be placed whenever the surface is wet or frozen. The Engineer will verify the mix temperature by means of a probe or infrared type of thermometer. A probe type thermometer, verified by the Department on an annual basis, must be used in order to reject a load of mixture based on temperatures outside the range stated in the placement QC plan.

Placement: The bituminous concrete mixture shall be placed and compacted to provide a smooth, dense surface with a uniform texture and no segregation at the specified thickness and dimensions indicated in the plans and specifications.

When unforeseen weather conditions prevent further placement of the mix, the Engineer is not obligated to accept or place the bituminous concrete mixture that is in transit from the plant.

In advance of paving, traffic control requirements shall be set up daily, maintained throughout placement, and shall not be removed until all associated work including density testing is completed.

The Contractor shall inspect the newly placed pavement for defects in the mixture or placement before rolling is started. Any deviation from standard crown or section shall be immediately remedied by placing additional mixture or removing surplus mixture. Such defects shall be corrected to the satisfaction of the Engineer.

Where it is impractical due to physical limitations to operate the paving equipment, the Engineer may permit the use of other methods or equipment. Where hand spreading is permitted, the mixture shall be placed by means of suitable shovels and other tools, and in a uniformly loose layer at a thickness that will result in a completed pavement meeting the designed grade and elevation.

Placement Tolerances: Each lift of bituminous concrete placed at a uniform specified thickness shall meet the following requirements for thickness and area. Any pavement exceeding these limits shall be subject to an adjustment or removal. Lift tolerances will not relieve the Contractor from meeting the final designed grade. Lifts of specified non-uniform thickness, i.e. wedge or shim course, shall not be subject to thickness and area adjustments.

a) Thickness- Where the total thickness of the lift of mixture exceeds that shown on the plans beyond the tolerances shown in Table 4.06-3, the longitudinal limits of such variation including locations and intervals of the measurements will be documented by the Engineer for use in calculating an adjustment in accordance with Article 4.06.04.

TABLE 4.06-3 Thickness Tolerances

Mixture Designation	Lift Tolerance
Class 4 and S1	+/- ⅜ inch
Class 1, 2 and 12 and S0.25, S0.375, S0.5	+/- ¼ inch

Where the thickness of the lift of mixture is less than that shown on the plans beyond the tolerances shown in Table 4.06-3, the Contractor, with the approval of the Engineer, shall take corrective action in accordance with this specification.

b) Area- Where the width of the lift exceeds that shown on the plans by more than the specified thickness of each lift, the longitudinal limits of such variation including locations and intervals of the measurements will be documented by the Engineer for use in calculating the adjustment in Article 4.06.04.

c) Delivered Weight of Mixture - When the delivery ticket shows that the truck exceeds the allowable gross weight for the vehicle type the quantity of tons representing the overweight amount will be documented by the Engineer for use in calculating an adjustment in accordance with Article 4.06.04.

Transverse Joints: All transverse joints shall be formed by saw-cutting a sufficient distance back from the previous run, existing bituminous concrete pavement or bituminous concrete driveways to expose the full thickness of the lift. A brush of tack coat shall be used on any cold joint immediately prior to additional bituminous concrete mixture being placed.

Tack Coat Application: A thin uniform coating of tack coat shall be applied to the pavement immediately before overlaying and be allowed sufficient time to break (set). All surfaces in contact with the bituminous concrete that have been in place longer than 3 calendar days shall have an application of tack coat. The tack coat shall be applied by a non-gravity pressurized spray system that results in uniform overlapping coverage at an application rate of 0.03 to 0.05 gallons per square yard for a non-milled surface and an application rate of 0.05 to 0.07 gallons per square yard for a milled surface. For areas where both milled and un-milled surfaces occur, the tack coat shall be an application rate of 0.03 to 0.05 gallons per square yard. The Engineer must approve the equipment and the method of measurement prior to use. The material for tack coat shall not be heated in excess of 160°F and shall not be further diluted.

Compaction: The Contractor shall compact the mixture to meet the density requirements as stated in Article 4.06.03 and eliminate all roller marks without displacement, shoving, cracking, or aggregate breakage.

The Contractor shall only operate rollers in the dynamic mode using the oscillatory system at the lowest frequency setting on concrete structures such as bridges and catch basins. The use of the vibratory system on concrete structures is prohibited. Rollers operating in the dynamic mode shall be shut off when reversing directions.

If the Engineer determines that the use of compaction equipment in the dynamic vibratory mode may damage highway components, utilities, or adjacent property, the Contractor shall provide alternate compaction equipment. The Engineer may allow the Contractor to operate rollers in the dynamic mode using the oscillatory system at the lowest frequency setting.

These allowances will not relieve the Contractor from meeting pavement compaction requirements.

Surface Requirements: The pavement surface of any lift shall meet the following requirements for smoothness and uniformity. Any irregularity of the surface exceeding these requirements shall be corrected by the Contractor.

a) Smoothness- Each lift of the surface course shall not vary more than ¼ inch from a Contractor-supplied 10 foot straightedge. For all other lifts of bituminous concrete, the tolerance shall be ⅜ inch. Such tolerance will apply to all paved areas.

b) Uniformity- The paved surface shall not exhibit segregation, rutting, cracking, disintegration, flushing or vary in composition as determined by the Engineer.

8. Longitudinal Joint Construction Methods: Unless noted on the plans or the contract documents or directed by the Engineer, the Contractor shall use Method I- Notched Wedge Joint (see figure 4.06-1) when constructing longitudinal joints where lift thicknesses are between 1½ and 3 inches, except for S1 and Class 4 mixes. Method II Butt Joint (see figure 4.06-2) shall be used for lifts less than 1½ inches or greater than 3 inches, and S1 and Class 4 mixes. During placement of multiple lifts of bituminous concrete, the longitudinal joint shall be constructed in such a manner that it is located at least 6 inches from the joint in the lift immediately below. The joint in the final lift shall be at the centerline or at lane lines. Each longitudinal joint shall maintain a consistent offset from the centerline of the roadway along its entire length.

Method I - Notched Wedge Joint:

Figure 4.06-1

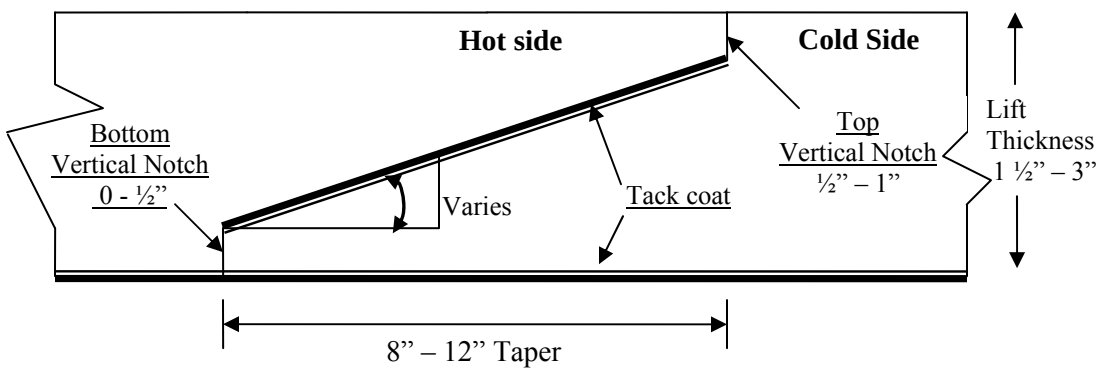

A notched wedge joint shall be constructed, as shown in the figure using a device that is capable of adjusting the top and bottom vertical notches independently and is attached to the paver screed.
The taper portion of the joint must be placed over the longitudinal joint in the lift immediately below. The top vertical notch must be located at the centerline or lane line in the final lift. The requirement for paving full width "curb to curb" as described in Method II may be waived if addressed in the QC plan and approved by the Engineer.

The taper portion of the wedge joint shall be compacted and not be exposed to traffic for more than 5 calendar days.

The pavement surface under the wedge joint must have an application of tack coat material. Prior to placing the completing pass (hot side), an application of tack coat must be applied to the exposed surface of the tapered section; regardless of time elapsed between paver passes. The in-place time allowance described in Sub article 4.06.03-7 does not apply to joint construction.

Any exposed wedge joint must be located to allow for the free draining of water from the road surface.

The Engineer reserves the right to define the paving limits when using a wedge joint that will be exposed to traffic.

<u>Method II - Butt Joint</u>:

Figure 4.06-2

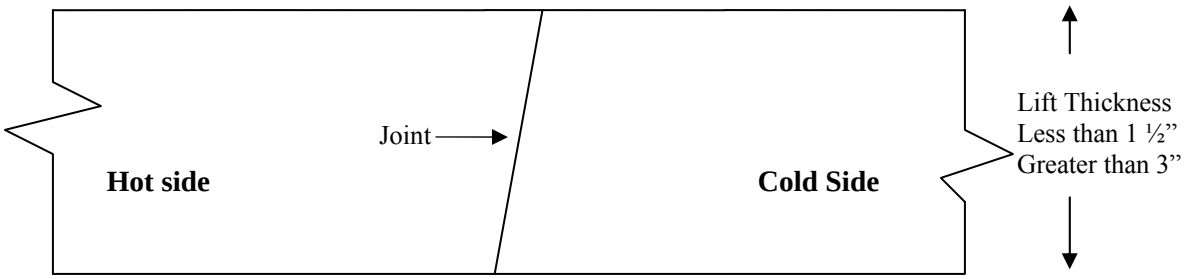

When adjoining passes are placed, the Contractor shall utilize equipment that creates a near vertical edge (refer to figure). The completing pass (hot side) shall have sufficient mixture so that the compacted thickness is not less than the previous pass (cold side). The end gate on the paver should be set so there is an overlap onto the cold side of the joint.

The Contractor shall not allow any butt joint to be incomplete at the end of a work shift unless otherwise allowed by the Engineer. When using this method, the Contractor is not allowed to leave a vertical edge exposed at the end of a work shift and must complete paving of the roadway full width "curb to curb."

<u>Method III- Butt Joint with Hot Poured Rubberized Asphalt Treatment</u>: When required by the contract or allowed by the Engineer, Method III (see figure 4.06-3) may be used.

Figure 4.06-3

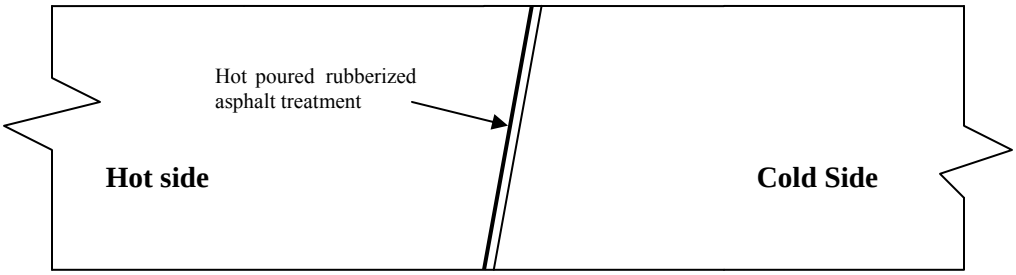

All of the requirements of Method II must be met with Method III. In addition, the longitudinal vertical edge must be treated with a joint seal material meeting the requirements of Section M.04 prior to placing a completing pass. The joint seal material shall be applied in accordance with the manufacturer's recommendation so as to provide a uniform coverage and avoid excess bleeding onto the newly placed pavement.

9. Contractor Quality Control (QC) Requirements for Placement:
The Contractor shall be responsible for maintaining adequate quality control procedures throughout the placement operations. Therefore, the Contractor must ensure that the materials, mixture and work provided by Subcontractors, Suppliers and Producers also meet contract specification requirements.

Quality Control Plan: Prior to placement the Contractor shall submit a QCP to the Engineer for approval. The QCP shall be submitted at the pre-construction meeting or a minimum 30 days prior to any production or paving. The QCP shall be in the format provided by the Engineer (http://www.ct.gov/dot/lib/dot/documents/dconstruction/pat/2012_qcp_outline_hma_placement_112012.pdf). Work covered by the QCP shall not commence until the Engineer's comments have been incorporated into the QCP and approved. The QCP shall detail every aspect of the placement process and if required, include a separate section on Extended Season paving as described in Section 4. "Seasonal Requirements". Information provided shall include the organization and procedures which the Contractor shall use to control all project site activity. The QCP must address the actions, inspection, or sampling and testing necessary to keep the production and placement operations in control, to determine when an operation has gone out of control and to respond to correct the situation in a timely fashion. The QCP shall also include details on when and who will communicate with personnel at the bituminous concrete plant to determine when immediate changes to the production or placement processes are needed, and to implement the required changes.

In addition the QCP shall also include the name and qualifications of a Quality Control Manager (QCM). The QCM shall be responsible for the administration of the QCP, and any modifications that may become necessary. The QCM shall have the ability to direct all Contractor personnel on the project during paving operations. All Contractor sampling, inspection and test reports shall be reviewed and signed by the QCM prior to submittal to the Engineer.

Approval of the QCP will be based on the inclusion of all of the required information. Approval of the QCP does not relieve the Contractor of its responsibility to comply with the project specifications. The Contractor may modify the QCP as work progresses and must document the changes in writing prior to commencing the next paving operation. These changes include but are not limited to changes in quality control procedures or personnel. Placement may be suspended by the Engineer until the revisions to the QCP have been put into effect.

The Quality Control Plan shall also include the name and qualifications of any outside testing laboratory performing any QC functions on behalf of the Contractor.

Quality Control Inspection, Sampling and Testing: The Contractor shall perform all quality control sampling and testing, provide inspection, and exercise management control to ensure that bituminous concrete production and placement conforms to the requirements as outlined in its QCP during all phases of the work.

a) Control Charts: The Contractor shall develop and maintain density control charts and shall submit them to the Engineer. The control charts shall include the project number, test numbers, test parameter, applicable upper and lower specification limits, and test data. The control charts shall be used as part of the quality control system to document the placement process. The control chart(s) shall be updated each day of production, and e a copy shall be submitted prior to the next day's production.
b) Records of Inspection and Testing: For each day of placement, the Contractor shall document all test results and inspections on forms approved by the Engineer. The document shall be certified by the Quality Control Manager or his representative that the information in the document is accurate, and that all work complies with the requirements of the contract.

The Contractor shall submit complete and accurate density sampling, testing and inspection documents to the Engineer within 48 hours. The documents shall be submitted in a manner acceptable to the Engineer.

The Contractor may obtain one (1) mat core and one (1) joint core per day for process control, provided this process is detailed in the QCP. The results of these process control cores shall not be used to dispute the Department determinations from the acceptance cores. The Contractor shall submit the location of each process control core to the Engineer for approval prior to taking the core. Additional cores may be obtained to correlate a density gauge used by the contractor for quality control as approved by the Engineer. The core holes shall be filled to the same requirements described in Sub article 4.06.03-10.

10. **Density Testing of Bituminous Concrete Utilizing Core Samples:** This procedure describes the frequency and the method the Contractor shall use to obtain pavement cores for acceptance from the project. Coring shall be performed on each lift specified to a thickness of one and one-half (1 ½) inches or more. Each lift including the longitudinal joints shall be compacted to the degree specified in Tables 4.06-9 and 4.06-10. The density of each core shall be determined using the production lot's average maximum theoretical gravity established from the plant production testing. Bituminous concrete Class 4 and HMA S1 are excluded from the longitudinal joint density requirements.

The Contractor shall extract cores (4 or 6 inch diameter for S0.25, S0.375 and S0.5 mixes, 6 inch diameter for S1.0 mixtures -wet sawed) from sampling locations determined by the Engineer. The Engineer must witness the extraction and labeling of cores, as well as the filling of the core holes. The cores shall be labeled by the Contractor with the project number, lot number, and sub-lot number on the top surface of the core. When labeling the core lot number, include whether the core is from a mat lot or joint lot by using an "M" for a mat core and "J" for a joint core. For example, a core from the first sub-lot of the first mat lot shall be labeled with "Lot M1 – 1". The first number refers to the lot and the second number refers to the sub-lot. Refer to

Figure 4.06-4. The side of the cores shall be labeled with the core lot number and date placed. The project inspector shall fill out a MAT-109 containing the same information to accompany the cores. The Contractor shall deliver the cores and MAT-109 to the Department's Central Testing Lab in a safe manner to ensure no damage occurs to the cores. The Contractor shall use a container approved by the Engineer. In general the container shall consist of an attached lid container made out of plastic capable of being locked shut and tamper proof. The Contractor shall use foam, bubble wrap, or another suitable material to prevent the cores from being damaged during transportation. Once the cores and MAT-109 are in the container the Engineer will secure the lid using a security seal. The security seal's identification number must be documented on the MAT-109. The Central Lab will break the security seal and take possession of the cores upon receipt.

Figure 4.06-4

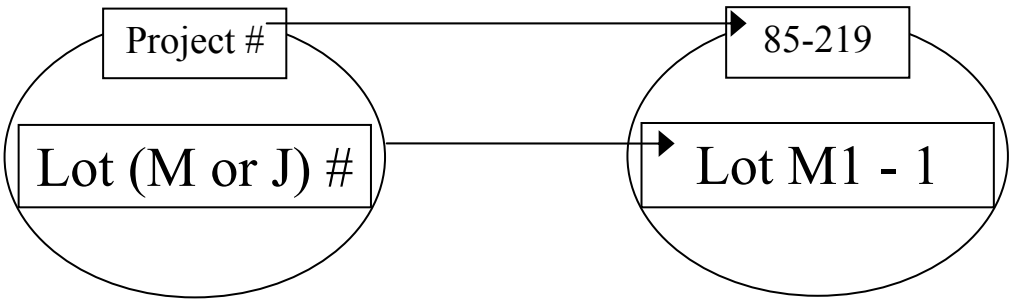

Frequency of sampling is in accordance with the following tables:

TABLE 4.06-4 - TESTING REQUIREMENT FOR BRIDGE DENSITY LOT

Length of Each Structure (Feet)	MAT – No. of Cores	JOINT - No. of cores
≤ 500'	See Table 4.06-5(A or B)	See Table 4.06-5(A or B)
501' – 1500'	3	3
1501' – 2500'	4	4
2501' and greater	5	5

All material placed on structures less than or equal to 500 feet in length shall be included as part of a standard lot as follows:

TABLE 4.06-5A – TESTING REQUIREMENT FOR DENSITY LOTS ≥ 500 TONS

Lot Type	No. of Mat Cores		No. of Joint Cores		Target Lot Size (Tons)
Lot Without Bridge(1)	4		4		2000
Lot With Bridge(s)(1)(2)	4 plus	1 per structure (≤ 300')	4 plus	1 per structure (≤ 300')	2000
		2 per structure (301' – 500')		2 per structure (301' – 500')	

TABLE 4.06-5B – TESTING REQUIREMENT FOR DENSITY LOTS

< 500 TONS

Lot Type	No. of Mat Cores	No. of Joint Cores	Lot Size (Tons)
Lot Without Bridge(1)	3	3	1 per lift
Lot With Bridge(s)(1)(2)	3	3	1 per lift

Note (1): The number of "Required Paver Passes for Full Width" shall be used to determine the sub-lot sizes within the lot. The number of paver passes for full width is determined by the contractor.

Note (2): If a non-bridge mat or joint core location randomly falls on a structure, the core is to be obtained on the structure in addition to the core(s) required on the structure.

A density lot will be complete when the full designed paving width of the established lot length has been completed and shall include all longitudinal joints that exist between the curb lines regardless of date(s) paved. Quantity of material placed on structures less than or equal to 500 feet long is inclusive of the standard lot. Prior to paving, the total length of the project to be paved shall be split up into lots that contain approximately 2000 tons each. Areas such as highway ramps may be combined to create one lot. In general, combined areas should be set up to target a 2000 ton lot size. One adjustment will apply for each lot. The tons shall be determined using the yield calculation in Article 4.06.04. The last lot shall be the difference between the total payable tons for the project and the sum of the previous lots.

After the compaction process has been completed, the material shall be allowed to cool sufficiently to allow the cutting and removal of the core without damage. The Contractor shall core to a depth that allows extraction so that the uppermost layer being tested for density will not be affected.

A mat core shall not be taken any closer than one foot from the edge of a paver pass. If a random number locates a core less than one foot from any edge, locate the core so that the sample is one foot from the edge.

Joint cores must be taken so that the center of the core is 5 inches from the visible joint on the hot mat side. Refer to figure 4.06-5.

Figure 4.06-5

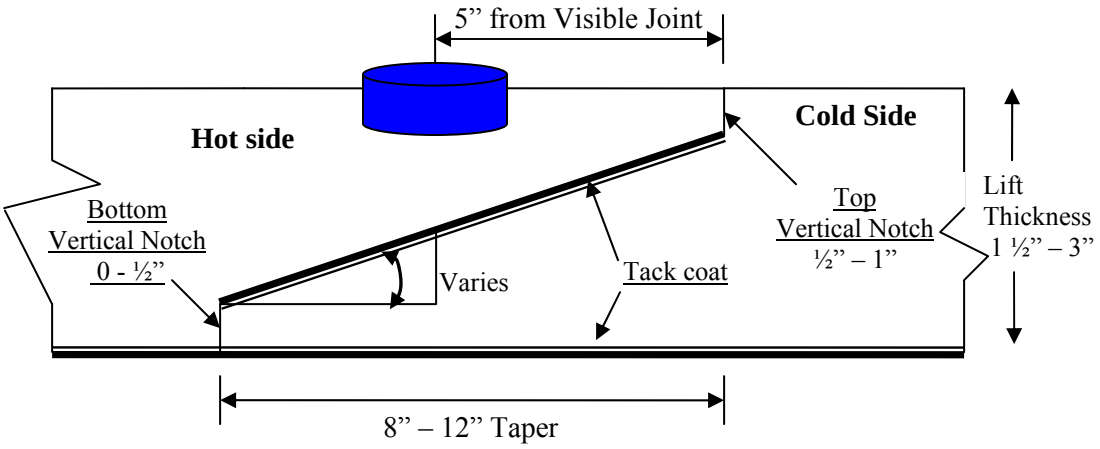

Cores may be obtained daily or weekly. All cores must be cut within 5 calendar days of placement. Any core that is damaged or obviously defective while being obtained will be replaced with a new core from a location within 2 feet measured in a longitudinal direction.

Core holes shall be filled immediately upon core extraction. Prior to being filled, the hole shall be prepared by removing any free water and applying tack coat using a brush or other means to uniformly cover the cut surface. The core hole shall be filled with a mixture containing the same nominal maximum aggregate size and compacted with a hand compactor or other mechanical means to the maximum compaction possible. The bituminous concrete mixture shall be compacted to ⅛ inch above the finished pavement prior to opening the roadway to traffic.

11. Acceptance Inspection, Sampling and Testing: Inspection, sampling, and testing to be used by the Engineer shall be performed at the minimum frequency specified in Section M.04 and stated herein.

Sampling for acceptance shall be established using ASTM D 3665, or a statistically based procedure of random sampling approved by the Engineer.

Plant Material Acceptance: The Contractor shall provide the required acceptance sampling, testing and inspection during all phases of the work in accordance with Section M.04. The Department will perform verification testing on the Contractor's acceptance test results. Should binder content or air void results exceed the specified tolerances in the Department's current QA Program for Materials, Acceptance and Assurance Testing Policies and Procedures, the Department will investigate to determine an assignable cause. Contractor's test results for a subject lot or sub lot may be replaced with verification's result for the purpose of assessing adjustments. The verification procedure is included in the Department's current QA Program for Materials.

Density Acceptance: The Engineer will perform all acceptance testing on the cores in accordance with AASHTO T 331(M).

12. Density Dispute Resolution Process: The Contractor and Engineer will work in partnership to avoid potential conflicts and to resolve any differences that may arise during quality control or acceptance testing for density. Both parties will review their sampling and testing procedures and results and share their findings. If the Contractor disputes the Engineer's test results, the Contractor must submit in writing a request to initiate the Dispute Resolution Process within 10 calendar days of the notification of the test results. No request for dispute resolution will be allowed unless the Contractor provides quality control results within the timeframe described in Sub article 4.06.03-9 supporting its position. Should the dispute not be resolved through evaluation of existing testing data or procedures, the Engineer may authorize the Contractor to obtain a new set of core samples per disputed lot. The core samples must be extracted no later than 30 calendar days from the date of Engineer's authorization. The number and type (mat, joint, or structure) of the cores taken for dispute resolution must reflect the number and type of the cores taken for acceptance. The location of each core shall be 36" from the original acceptance core location forward along a line parallel to the baseline that results in the same type (mat, joint, or structure) of core. All such core samples shall be extracted and filled using the procedure outlined in Article 4.06.03. The results from the dispute resolution cores shall be added to the results from the acceptance cores and averaged for determining the final in-place density value.

13. Corrective Work Procedures: Any portion of the completed pavement that does not meet the requirements of the specification shall be corrected at the expense of the Contractor. Any corrective courses placed as the final wearing surface shall not be less than 1½ inches in thickness after compaction.

If pavement placed by the Contractor does not meet the specifications, and the Engineer requires its replacement or correction, the Contractor shall:

a) Propose a corrective procedure to the Engineer for review and approval prior to any corrective work commencing. The proposal shall include:
   - Limits of pavement to be replaced or corrected, indicating stationing or other landmarks that are readily distinguishable.
   - Proposed work schedule.
   - Construction method and sequence of operations.
   - Methods of maintenance and protection of traffic.
   - Material sources.
   - Names and telephone numbers of supervising personnel.

b) Perform all corrective work in accordance with the Contract and the approved corrective procedure.

14. Protection of the Work: The Contractor shall protect all sections of the newly finished pavement from damage that may occur as a result of the Contractor's operations for the duration of the Project. Prior to the Engineer's authorization to open the pavement to traffic, the Contractor is responsible to protect the pavement from damage.

15. Cut Bituminous Concrete Pavement: Work under this item shall consist of making a straight-line cut in the bituminous concrete pavement to the lines delineated on the plans or as directed by the Engineer. The cut shall provide a straight, clean, vertical face with no cracking, tearing or breakage along the cut edge.

4.06.04—Method of Measurement:

1. Bituminous Concrete Class ( ) or HMA S* or PMA S*: The quantity of bituminous concrete measured for payment will be determined by the documented net weight in tons accepted by the Engineer in accordance with this specification and Section M.04.

2. Adjustments: Adjustments may be applied to bituminous concrete quantities and will be measured for payment using the following formulas:

Yield Factor for Adjustment Calculation = 0.0575 Tons/SY/inch

Actual Area = [(Measured Length (ft)) x (Avg. of width measurements (ft))]

Actual Thickness (t) = Total tons delivered / [Actual Area (SY) x 0.0575 Tons/SY/inch]

a) Area: If the average width exceeds the allowable tolerance, an adjustment will be made using the following formula. The tolerance for width is equal to the specified thickness (in.) of the lift being placed.

Tons Adjusted for Area (T_A) = [(L x W_{adj})/9] x (t) x 0.0575 Tons/SY/inch = (-) Tons

Where: L = Length (ft)
(t) = Actual thickness (inches)
W_{adj} = (Designed width (ft) + tolerance /12) - Measured Width)

b) Thickness: If the actual thickness is less than the allowable tolerance, the Contractor shall submit a repair procedure to the Engineer for approval. If the actual thickness exceeds the allowable tolerance, an adjustment will be made using the following formula:

Tons Adjusted for Thickness (T_T) = A x t_{adj} x 0.0575 = (-) Tons

Where: A = Area = {[L x (Designed width + tolerance (lift thickness)/12)] / 9}
t_{adj} = Adjusted thickness = [(Dt + tolerance) - Actual thickness]
Dt = Designed thickness (inches)

c) Weight: If the quantity of bituminous concrete representing the mixture delivered to the project is in excess of the allowable gross vehicle weight (GVW) for each vehicle, an adjustment will be made using the following formula:

Tons Adjusted for Weight (T_W) = GVW – DGW= (-) Tons

Where: DGW = Delivered gross weight as shown on the delivery ticket or measured on a certified scale.

d) Mixture Adjustment: If the quantity of bituminous concrete representing the produced mixture exceeds one or more of the production tolerances for Marshall (Table 4.06-6) or Superpave mix designs (Table 4.06-7 and 4.06-8) , an adjustment will be made using the following formulas. The Department's Division of Material Testing will calculate the daily adjustment values for T_{MD} and T_{SD}.

(1) *Marshall Design*- The tolerances shown in Table 4.06-6 for gradation and binder content will be used to determine whether a mixture adjustment will apply. If the mixture does not meet the requirements of Section M.04, an adjustment will be computed using the following formula:

Tons Adjusted for Marshall Design (T_{MD}) = M x 0.10

Where: M= Tons of bituminous concrete mixture exceeding the tolerances in Table 4.06-5.

TABLE 4.06-6
TOLERANCES FOR CONSECUTIVE TESTS (MARSHALL)

Classes	Criteria	% Tolerances (+/-)
-	Binder	0.4
1, 2, 4, 5, 5A & 5B	#200	2.0
1, 2, 4	#50	4
1, 2, 5, 5A & 5B	#30	5
1, 2, 4, 5, 5A & 5B	#8	6
1, 2, 4, 5, 5A & 5B	#4	7
1, 2, 4, 5, 5A & 5B	⅜ & ½ inch	8

(2) *Superpave Design*- The adjustment values in Table 4.06-7 and 4.06-8 shall be calculated for each sub lot based on the Air Void and Liquid Binder Content test results for that sub lot. The total adjustment for each day's production (lot) will be computed using tables and the following formulas:

Tons Adjusted for Superpave Design (T_{SD}) = $[(AdjAV_t + AdjPB_t) / 100]$ X Tons

Percent Adjustment for Air Voids = $AdjAV_t = [AdjAV_1 + AdjAV_2 + AdjAV_i + \ldots + AdjAV_n)] /n$

Where: $AdjAV_t$ = Total percent air void adjustment value for the lot
$AdjAV_i$ = Adjustment value from Table 4.06-7 resulting from each sub lot or the average of the adjustment values resulting from multiple tests within a sub lot, as approved by the Engineer.
n = number of sub lots based on Table M.04.03-1

TABLE 4.06-7
ADJUSTMENT VALUES FOR AIR VOIDS (SUPERPAVE)

Adjustment Value ($AdjAV_i$) (%)	**S0.25, S0.375, S0.5, S1 Air Voids (AV)**
+2.5	3.8 - 4.2
+3.125*(AV-3)	3.0 - 3.7
-3.125*(AV-5)	4.3 – 5.0
20*(AV-3)	2.3 – 2.9
-20*(AV-5)	5.1 – 5.7
-20.0	$\leq$ 2.2 or $\geq$ 5.8

<u>Percent Adjustment for Liquid Binder</u> = $AdjPB_t = [(AdjPB_1 + AdjPB_2 + AdjPB_i + \ldots + AdjPB_n)] / n$

Where: $AdjPB_t$= Total percent liquid binder adjustment value for the lot
$AdjPB_i$ = Adjustment value from Table 4.06-7 resulting from each sub lot
n = number of binder tests in a production lot

TABLE 4.06-8

Adjustment Value ($AdjAV_i$) (%)	**<u>S0.25, S0.375, S0.5, S1</u> Pb (refer to Table M.04.03-5)**
0.0	Equal to or above the min. liquid content
- 10.0	Below the min. liquid content

e) <u>Density Adjustment</u>: The quantity of bituminous concrete measured for payment for a specified lift of pavement 1½ inches or greater may be adjusted for density. Separate density adjustments will be made for each lot and will not be combined to establish one density adjustment. If either the Mat or Joint adjustment value is "remove and replace", the density lot shall be removed and replaced (curb to curb).

Tons Adjusted for Density (T_D) = $[\{(PA_M \times .50) + (PA_J \times .50)\} / 100]$ X Density Lot Tons

Where: T_D = Total tons adjusted for density for each lot
PA_M = Mat density percent adjustment from Table 4.06-9

PA_J = Joint density percent adjustment from Table 4.06-10

TABLE 4.06-9
ADJUSTMENT VALUES FOR PAVEMENT MAT DENSITY

Average Core Result Percent Mat Density	Percent Adjustment (Bridge and Non-Bridge) (1,2)
97.1 - 100	-1.667*(ACRPD-98.5)
94.5 – 97.0	+2.5
93.5 – 94.4	+2.5*(ACRPD-93.5)
92.0 – 93.4	0
90.0 – 91.9	-5*(92-ACRPD)
88.0 – 89.9	-10*(91-ACRPD)
87.0 – 87.9	-30
86.9 or less	Remove and Replace (curb to curb)

TABLE 4.06-10
ADJUSTMENT VALUES FOR PAVEMENT JOINT DENSITY

Average Core Result Percent Joint Density	Percent Adjustment (Bridge and Non-Bridge) (1,2)
97.1 – 100	-1.667*(ACRPD-98.5)
93.5 – 97.0	+2.5
92.0 – 93.4	+1.667*(ACRPD-92)
91.0 – 91.9	0
89.0 – 90.9	-7.5*(91-ACRPD)
88.0 – 88.9	-15*(90-ACRPD)
87.0 – 87.9	-30
86.9 or less	Remove and Replace (curb to curb)

(1) ACRPD = Average Core Result Percent Density
(2) All Percent Adjustments to be rounded to the second decimal place. For example, 1.667 is to be rounded to 1.67.

3. Transitions for Roadway Surface: The installation of permanent transitions shall be measured under the appropriate item used in the formation of the transition.

The quantity of material used for the installation of temporary transitions shall be measured for payment under the appropriate item used in the formation of the transition. The installation and removal of a bond breaker, and the removal and disposal of any temporary transition formed by milling or with bituminous concrete pavement is not measured for payment.

4. Cut Bituminous Concrete Pavement: The quantity of bituminous concrete pavement cut will be measured in accordance with Article 2.02.04.

5. Material for Tack Coat: The quantity of tack coat will be measured for payment by the number of gallons furnished and applied on the Project and approved by the Engineer. No tack coat material shall be included that is placed in excess of the tolerance described in Article 4.06.03.

Method of Measurement:

a. Container Method- Material furnished in a container will be measured to the nearest ½ gallon. The volume will be determined by either measuring the volume in the original container by a method approved by the Engineer or using a separate graduated container capable of measuring the volume to the nearest ½ gallon. The container in which the material is furnished must include the description of material, including lot number or batch number and manufacturer or product source.

b. Truck Method- The Engineer will establish a weight per gallon of the bituminous material based on the specific gravity at 60ºF for the material furnished. The number of gallons furnished will be determined by weighing the material on scales furnished by and at the expense of the Contractor.

6. Material Transfer Vehicle (MTV) - **The furnishing and use of a MTV will be measured separately for payment based on the actual number of surface course tons delivered to a paver using the MTV.**

4.06.05—Basis of Payment:

1. Bituminous Concrete Class ( ), HMA S* or PMA S*: The furnishing and placing of bituminous concrete will be paid for at the Contract unit price per ton for "Bituminous Concrete, Class ( )" or “HMA S*” or “PMA S*”.

- All costs associated with providing illumination of the work area are included in the general cost of the work.
- All costs associated with constructing longitudinal joints are included in the general cost of the work.
- All costs associated with obtaining cores for core correlation and dispute resolution are included in the general cost of the work.

2. Bituminous Concrete Adjustment Costs: The adjustment will be calculated using the formulas shown below if all of the measured adjustments in Article 4.06.04 do not equal zero. A payment will be made for a positive adjustment. A deduction from monies due the Contractor will be made for a negative adjustment.

Production Lot: $[T_T + T_A + T_W + (T_{MD} \text{ or } T_{SD})] \times \text{Unit Price} = \text{Est. (P)}$

Density Lot: T_D X Unit Price = Est. (D)

Where: Unit Price = Contract unit price per ton per type of mixture
T_* = Total tons of each adjustment calculated in Article 4.06.04

Est. ( ) = Pay Unit represented in dollars representing incentive or disincentive.

The estimated cost figure if included in the bid proposal or estimate is not to be altered in any manner by the bidder. If the bidder should alter the amount shown, the altered figure will be disregarded and the original cost figure will be used to determine the amount of the bid for the Contract.

3. Transitions for Roadway Surface: The installation of permanent transitions shall be paid under the appropriate item used in the formation of the transition. The quantity of material used for the installation of temporary transitions shall be paid under the appropriate pay item used in the formation of the transition. The installation and removal of a bond breaker, and the removal and disposal of any temporary transition formed by milling or with bituminous concrete pavement is included in the general cost of the work.

4. The cutting of bituminous concrete pavement will be paid in accordance with Article 2.02.05.

5. Material for tack coat will be paid for at the Contract unit price per gallon for "Material for Tack Coat".

6. The Material Transfer Vehicle (MTV) will be paid at the Contract unit price per ton for a "Material Transfer Vehicle".

Pay Item*	**Pay Unit***
Bituminous Concrete, Class ( )	TON
HMA S*	TON
PMA S*	TON
Bituminous Concrete Adjustment Cost	EST.
Material for Tack Coat	GAL.
Material Transfer Vehicle	TON

*For contracts administered by the State of Connecticut, Department of Administrative Services, the pay items and pay units are as shown in contract award price schedule.

SECTION 6.01 CONCRETE FOR STRUCTURES

Section 6.01 *Concrete for Structures* is hereby replaced in its entirety with the following:

6.01.01—Description
6.01.02—Materials
6.01.03—Construction Methods
6.01.04—Method of Measurement
6.01.05—Basis of Payment

6.01.01—Description: This item shall include concrete for use in bridges and culverts, walls, catch basins, drop inlets and other incidental construction as required. The concrete shall be composed of Portland cement, pozzolans, fine and coarse aggregate, admixtures and water, prepared and constructed in accordance with these specifications, at the locations and of the form dimensions and class shown on the plans, or as directed by the Engineer.

The use of concrete from dry batch or central mixed plants is permitted for all concrete mixtures.

6.01.02—Materials: The materials for this work shall conform to the requirements of Section M.03.

6.01.03—Construction Methods:

1. Falsework and Forms: Falsework is considered to be any temporary structure which supports structural elements of concrete, steel, masonry or other material during the construction or erection. Forms are to be considered to be the enclosures or panels which contain the fluid concrete and withstand the forces due to its placement and consolidation. Forms may in turn be supported on falsework.

This work shall consist of the construction and removal of falsework and forms that are designed by the Contractor in the execution of the work, and whose failure to perform properly could adversely affect the character of the contract work or endanger the safety of adjacent facilities, property, or the public. Falsework and forms shall be mortar tight and of sufficient rigidity and strength to safely support all loads imposed and to produce in the finished structure the lines and grades indicated in the contract documents. Forms shall also impart the required surface texture and rustication and shall not detract from the uniformity of color of the formed surfaces. Forms shall be of wood, steel or other material approved by the Engineer.

(a) Design: The design of falsework and formwork shall conform to the *AASHTO Guide Design Specifications for Bridge Temporary Works*, or to other established and generally accepted design codes such as ACI Standard *ACI 347-Recommended Practice for Concrete Formwork* or specific form or falsework manufacturer specifications. When other than new or undamaged materials are used, appropriate

reductions in allowable stresses, and decreases in resistance factors or imposed loads shall be used for design.

(b) Loads: The design of the falsework and forms shall be based on load factors specified in the *AASHTO LRFD Bridge Design Specifications* and all applicable load combinations shall be investigated. The design load for falsework shall consist of the sum of appropriate dead and live vertical loads and any horizontal loads.

As a minimum, dead loads shall include the weight of the falsework and all construction material to be supported. The combined unit weight of concrete, reinforcing and pre-stressing steel, and forms shall be assumed to be not less than 0.16 kip/ft^3 of normal-weight concrete or 0.13 kip/ft^3 of lightweight concrete that is supported.

Live loads shall consist of the actual weight of any equipment to be supported, applied as concentrated loads at the points of contact and a uniform load of not less than 0.02 kip/ft^2 applied over the area supported, plus 0.075 kip/ft applied at the outside edge of deck overhangs.

The horizontal load used for the design of the falsework bracing system shall be the sum of the horizontal loads due to equipment; construction sequence including unbalanced hydrostatic forces from fluid concrete and traffic control devices; stream flow, when applicable; and an allowance for wind. However, in no case shall the horizontal load to be resisted in any direction be less than two percent of the total dead load.

For post-tensioned structures, the falsework shall also be designed to support any increase in or redistribution of loads caused by tensioning of the structure. Loads imposed by falsework onto existing, new, or partially completed structures shall not exceed those permitted in Sub article 6.01.03-12, “Application of Loads.”

(c) Working Drawings: The working drawings for falsework and formwork shall be prepared in accordance with Article 1.05.02 whenever the falsework or formwork exceeds 14.0 feet in height or whenever vehicular, marine, or pedestrian traffic may travel under or adjacent to the falsework or formwork. Working drawings shall include the sequence, method and rate of placement of the concrete.

Manufacturer catalog cuts or written installation procedures shall be provided for any clips, braces, hangers or other manufactured parts used with the formwork or falsework.

(d) Construction: Forms and falsework shall be built true to lines and grades shall be strong, stable, firm, mortar-tight and adequately braced or tied, or both. They shall be designed and constructed to withstand all loads and pressures including those imposed by plastic concrete, taking full account of the stresses due to the rate of pour, effect of vibration and conditions brought about by construction methods. Forms and

falsework shall be constructed to compensate for variations in camber of supporting members and allow for deflections.

Falsework and formwork shall be chamfered at all sharp corners, unless otherwise ordered or permitted, and shall be given a slight bevel or draft in the case of projections to insure satisfactory removal. Materials for falsework and formwork and their supports, ties and bracing, shall be of the type, quality and strength to achieve the structural requirements. Form material in contact with concrete shall provide the finished concrete surface smoothness as specified in Sub article 6.01.03-10, "Finishing Concrete Surfaces" and uniform appearance.

Falsework and formwork shall be treated with form oil or other release agent approved by the Engineer before the reinforcing steel is placed or self-releasing forms approved by the Engineer may be used. Release agents which will adhere to or discolor the concrete shall not be used.

Falsework and formwork for concrete surfaces exposed to view shall produce a smooth surface of uniform texture, free of voids, indentations, protrusions and bulges. Panels lining falsework and formwork shall be arranged so that the joint lines form a symmetrical pattern conforming to the general lines of the structure. The same type of form-lining material shall be used throughout each element of a structure. Falsework and formwork shall be sufficiently rigid so that the undulation of the concrete surface shall not exceed 1/4 inch when checked with a 4 foot straightedge or template.

For non-exposed surfaces the falsework and formwork shall be sufficiently rigid so that the undulation of the concrete surface shall not exceed 1/2 inch when checked with a 4-foot straightedge or template.

Metal ties and anchors to hold the falsework and formwork in alignment and location shall be so constructed that the metal work can be removed to a depth of at least 2 inches from the concrete surface without damage to the concrete. All cavities resulting from the removal of metal ties shall be filled after removal of forms with cement mortar of the same proportions used in the body of the work or other materials approved by the Engineer, and the surface finished smooth and even, and if exposed in the finished work, shall conform to the texture and color of adjacent surfaces. With permission of the Engineer, the Contractor need not remove from the underneath side of bridge decks portions of metal devices used to support reinforcing steel providing such devices are of material, or are adequately coated with material, that will not rust or corrode. When coated reinforcing steel is required, all metal ties, anchorages, or spreaders that remain in the concrete shall be of corrosion-resistant material or coated with a dielectric material.

Forms shall be clean and clear of all debris. For narrow walls and columns where the bottom of the form is inaccessible, an access opening will be allowed in the form and falsework for cleaning out extraneous material.

(e) Date of Completion: The year in which the superstructure is completed in its entirety shall be cast in at least two places as shown on the plans unless otherwise ordered by the Engineer. The date shall be placed in diagonally opposite ends of the bridge parapets or as designated by the Engineer. The reverse molds for the date will be furnished by the Contractor.

(f) Bridge Decks: After erection of beams and prior to placing falsework and forms, the Contractor shall take elevations along the top of the beam at the points shown on the plans or as directed by the Engineer. The Contractor shall calculate the haunch depths and provide them to the Engineer a minimum of 7 days prior to installing the falsework and forms. The Contractor shall also provide calculations for the setting of the overhang brackets based on the final beam deflection. These calculations shall be based on the final proposed deck grade and parapet elevations.

Falsework or formwork for deck forms on girder bridges shall be supported directly on the girders so that there will be no appreciable differential settlement during placing of the concrete. Girders shall be either braced and tied to resist any forces that would cause rotation or torsion in the girders caused by the placing of concrete for diaphragms or decks, or shown to be adequate for those effects. Unless specifically permitted, welding of falsework support brackets or braces to structural steel members or reinforcing steel shall not be allowed.

(g) Stay-In-Place Metal Forms for Bridge Decks: These forms may be used if shown in the contract documents or approved by the Engineer. Prior to the use of such forms and before fabricating any material, the Contractor shall submit working drawings to the Engineer for review in accordance with Article 1.05.02 Working Drawings. These drawings shall include the proposed method of form construction, erection plans including placement plans, attachment details, weld procedure(s), material lists, material designation, gage of all materials, and the details of corrugation. Also, copies of the form design computations shall be submitted with the working drawings. Any changes necessary to accommodate stay-in-place forms, if approved, shall be at no cost to the Department.

The metal forms shall be designed on the basis of the dead load of the form, reinforcement and the plastic concrete, including the additional weight of concrete (considered to be equivalent to the weight imposed by an additional concrete thickness equal to 3% of the proposed deck thickness, but not to exceed 0.3 inches) due to the deflection of the metal forms, plus 50 pounds per square foot for construction loads. The allowable stress in the corrugated form and the accessories shall not be greater than 0.725 times the yield strength of the furnished material and the allowable stress shall not exceed 36,000 psi. The span for design and deflection shall be the clear distance between edges of the beams or girders less two inches and shall be measured parallel to the form flutes. The maximum deflection under the weight of plastic concrete, reinforcement, and forms shall not exceed 1/180 of the form span or 0.5 inches, whichever is less. In no case shall the loading used to estimate this deflection be less than 120 pounds per square foot. The permissible form camber shall be based on the actual dead load condition. Camber shall not be used to compensate for deflection in

excess of the foregoing limits. The form support angles shall be designed as a cantilever and the horizontal leg of the form support angle shall not be greater than 3 inches.

No stay-in-place metal forms shall be placed over or be directly supported by the top flanges of beams or girders. The form supporting steel angles may be supported by or attached to the top flanges.

Stay-in-place metal forms shall not be used in bays where longitudinal slab construction joints are located, under cantilevered slabs such as the overhang outside of fascia members, and bridges where the clearance over a salt-laden body of water is less than fifteen feet above mean high water level.

Welding to the top flanges of steel beams and girders is not permitted in the areas where the top flanges are in tension, or as indicated on the plans. Alternate installation procedures shall be submitted addressing this condition.

Drilling of holes in pre-stressed concrete beams or the use of power-actuated tools on the pre-stressed concrete beams for fastening of the form supports to the pre-stressed concrete beams will not be permitted. Welding of the reinforcing steel to the pre-stressed units is not permitted.

All edges of openings cut for drains, pipes, and similar appurtenances shall be independently supported around the entire periphery of the opening.

All fabricated stay-in-place metal forms shall be unloaded, stored at the project site at least four inches above the ground on platforms, skids or other suitable supports and shall be protected against corrosion and damage and handled in such a manner as to preclude damage to the forms. Damaged material shall be replaced at no additional cost to the State.

Any exposed form or form support metal where the galvanized coating has been damaged, shall be thoroughly cleaned, wire brushed, then coated with two coats of Zinc Dust – Zinc Oxide primer, Federal Specification No. TT-P-641d, Type II or another product acceptable to the Engineer.

The forms shall be installed from the topside in accordance with the manufacturer's recommended installation procedures. The form supports shall insure that the forms retain their correct dimensions and positions during use at all times. Form supports shall provide vertical adjustment to maintain design slab thickness at the crest of corrugation, to compensate for variations in camber of beams and girders and to allow for deflections. Stay-in-place metal forms shall have a minimum depth of the form valley equal to two inches. The forms shall have closed tapered ends. Lightweight filler material shall be used in the form valleys.

All field cutting shall be done with a steel cutting saw or shears including the cutting of supports, closures and cutouts Flame cutting of forms is not permitted.

All welding shall be performed by Department certified welders in accordance with the "Welding" Sub article in Section 6.03. Welding of forms to supports is not permitted.

The steel form supports shall be placed in direct contact with the flange of stringer or floor beam flanges and attached by bolts, clips, welding where permitted, or other approved means. Form sheets shall not be permitted to rest directly on the top of the stringer or floor beam flanges. The forms shall be securely fastened to form supports with self-drilling fasteners and shall have a minimum bearing length of one inch at each end. In the areas where the form sheets lap, the form sheets shall be securely fastened to one another by fasteners at a maximum spacing of 18 inches. The ends of the form sheets shall be securely attached to the support angles with fasteners at a maximum spacing of 18 inches or two corrugation widths, whichever is less.

The depth of the concrete slab shall be as shown on the plans and the corrugated forms shall be placed so that the top of the corrugation will coincide with the bottom of the deck slab. No part of the forms or their supports shall protrude into the slab. All reinforcement in the bottom reinforcement mat shall have a minimum concrete cover of one inch unless noted otherwise on the plans.

The completed stay-in-place metal form system shall be sufficiently tight to prevent leakage of mortar. Where forms or their installation are unsatisfactory in the opinion of the Engineer, either before or during placement of the concrete, the Contractor shall correct the defects before proceeding with the work.

(h) Construction Joints: Construction joints other than those shown on the plans will not be permitted without prior approval of the Engineer. In joining fresh concrete to concrete that has already set, the work already in place shall have all loose and foreign material removed, and the surface roughened and thoroughly drenched with water.

All reinforcing steel shall extend continuously through joints. Where unplanned construction joints may be needed, they shall be constructed as directed by the Engineer.

(i) Expansion and Contraction Joints: Expansion and contraction joints shall be constructed at the locations and in accordance with the details specified in the contract documents. The forming of joint openings shall be dimensioned in accordance with the joint manufacturer's design requirements. Joints include open joints, filled joints, joints sealed with sealants, joints reinforced with steel armor plates or shapes, paraffin coated joints, and joints with combinations of these features.

Open joints shall be placed at locations designated on the plans and shall be formed by the insertion and subsequent removal of templates of wood, metal or other suitable material. The templates shall be so constructed that their removal may be readily accomplished without damage to the work.

Filled joints shall be made with joint filler, the materials for which shall conform to the requirements of the plans and of these specifications.

For mechanical joint systems, the concrete shall be placed in such a manner that does not interfere with the movement of the joint.

(j) Pipes, Conduits and Utility Installations: The Contractor shall coordinate the installation of pipes, conduits and utilities as shown on the plans and in conformance with the contract documents or as directed by the Engineer. The openings accommodating such pipe, conduit and utility installations shall be incorporated into the formwork by the Contractor.

(k) Anchorages: Anchor bolts and systems shall be set to the requirements of the plans and contract documents. Anchor bolts and systems shall be clean and free of dirt, moisture or other foreign materials at the time of installation. The anchor bolts and systems shall be installed prior to placing concrete.

With the Engineer's approval, the Contractor may install anchorages after placement and setting of the concrete or in formed holes. The anchorages shall be installed into drilled or formed holes having a diameter and a depth suitable to receive the bolts in accordance with the grout manufacturer's requirements. Such holes shall be located to avoid damage to the existing reinforcement. All holes shall be perpendicular to the plane surface. The Contractor shall take every precaution necessary to prevent damage to the concrete due to freezing of water or grout in anchor bolt holes.

(l) Ornament or Reverse Moulds: Ornamental work, when so noted on the plans, shall be formed by the use of reverse moulds. These moulds shall be produced by a qualified manufacturer approved by the Engineer. They shall be built in accordance with the general dimensions and appearance shown on the plans. The Contractor shall submit all detailed drawings, models, or carvings for review by the Engineer before the moulds are made.

The Contractor shall be responsible for their condition at all times, and he will be required to remove and replace any damaged or defective moulds at his own expense.

The surfaces of the moulds shall be given a coating of form release agent to prevent the adherence of concrete. Any material which will adhere to or discolor the concrete shall not be used.

Form Liners, if required, shall be installed per the Contract Special Provisions.

(m) Removal of Falsework and Forms: The Contractor shall consider the location and character of the structure, the weather, the materials used in the mix, and other conditions influencing the early strength of the concrete when removing forms and falsework. Methods of removal likely to cause damage to the concrete surface shall

not be used. Supports shall be removed in such a manner as to permit the structure to uniformly and gradually take the stresses due to its own weight. For structures of two or more spans, the sequence of falsework release shall be as specified in the contract documents or approved by the Engineer.

Removal shall be controlled by field-cured cylinder tests. The removal shall not begin until the concrete has achieved 75 percent of the design compressive strength. To facilitate finishing, side forms carrying no load may be removed after 24 hours with the permission of the Engineer, but the curing process must be continued for seven days.

When the results of field-cured cylinder tests are unavailable, the following periods, exclusive of days when the temperature drops below 40°F, may govern the removal of forms.

Form Removal Requirements	
Structure Element	Minimum Time Period
Arch Centers, centering under beams, pier caps, and unsupported elements	14 days
Slabs on grade, Abutments and Walls	24 hours
Columns	2 days
Bridge Decks	28 days

The Contractor may submit for review and approval by the Engineer, alternate methods to determine the in-place strength of the concrete for removal of forms and falsework.

2. Protection from Environmental Conditions: The concrete shall be protected from damage due to weather or other environmental conditions during placing and curing periods. In-place concrete that has been damaged by weather conditions shall be either repaired to an acceptable condition or removed and replaced as determined by the Engineer.

(a) Rain Protection: The placement of concrete shall not commence or continue unless adequate protection satisfactory to the Engineer is provided by the Contractor.

(b) Hot Weather Protection: When the ambient air temperature is above 90°F, the forms, which will come in contact with the mix shall be cooled to below 90°F for a minimum of one hour prior to and one hour after completion of the concrete placement by means of a water spray or other methods satisfactory to the Engineer.

(c) Cold Weather Protection: When there is a probability of ambient air temperature below 40°F during placement and curing, a cold-weather concreting plan shall be submitted to the Engineer for review and comment. The plan shall detail the methods and equipment, including temperature measuring devices that will be used to ensure that the required concrete and air temperatures are maintained.

1. Placement: The forms, reinforcing steel, steel beam flanges, and other surfaces

which will come in contact with the mix shall be heated to a minimum of 40°F, by methods satisfactory to the Engineer, for a minimum of one hour prior to, and maintained throughout, concrete placement.

2. Curing: For the first six days, considered the initial cure period, the concrete shall be maintained at a temperature of not less than 45°F and the air temperature surrounding the structure shall be maintained at a temperature of not less than 60°F. When pozzolans or slag is used in the concrete mix, the initial cure period shall be increased to ten days. After the initial cure period, the air surrounding the structure shall be maintained at a temperature above 40° F for an additional eight days. If external heating is employed, the heat shall be applied and withdrawn gradually and uniformly so that no part of the concrete surface is heated to more than 90°F or caused to change temperature by more than 20°F in 8 hours. The Engineer may reduce or increase the amount of time that the structure must be protected or heated based on an indication of in-place concrete strength acceptable to the Engineer.

(d) Additional Requirements for Bridge Decks: Prior to the application of curing materials, all the concrete placed on bridge decks shall be protected from damage due to rapid evaporation by methods acceptable to the Engineer. During periods of low humidity (less than 60% relative humidity), sustained winds of 25 mph or more, or ambient air temperatures greater than 80ºF the Contractor shall provide, in writing for the Engineer's review, details of what additional measures during placement and curing shall be taken.

Protection may include increasing the humidity of the surrounding air with fog sprayers and employing wind-breaks or sun-shades. Additional actions may include reduction of the temperature of the concrete prior to placement, scheduling placement during the cooler times of days or nights, or any combination thereof.

(e) Concrete Exposed to Salt Water: No Construction joints shall be formed between the levels of extreme low water and extreme high water or the upper limit of wave action as determined by the Engineer.

3. Transportation and Delivery of Concrete: All material delivered to the project shall be supplied by a producer qualified in accordance with Section M.03. The producer shall have sufficient plant capacity and trucks to ensure continuous delivery at the rate required to prevent the formation of cold joints.

(a) Material Documentation: All vendors producing concrete must have their weigh scales and mixing plant automated to provide a detailed ticket. Delivery tickets must include the following information:

1. State of Connecticut printed on ticket
2. Name of producer, identification of plant
3. Date and time of day
4. Type of material

5. Cubic yards of material loaded into truck
6. Project number, purchase order number, name of contractor (if contractor other than producer)
7. Truck number for specific identification of truck
8. Individual aggregate, cement, water weights and any admixtures shall be printed on plant tickets
9. Water/cement ratio
10. Additional water allowance in gallons based on water/cement ratio for mix

A State inspector may be present to monitor batching and/or weighing operations.

The Contractor must notify the Engineer immediately if, during the production day, there is a malfunction of the recording system in the automated plant or weigh scales. Manually written tickets containing all required information may be allowed for up to one hour after malfunction provided they are signed by an authorized representative of the producer.

(b) Transportation of Mixture: Trucks delivering concrete shall be qualified in accordance with Section M.03.

If the concrete mix arrives at the project with a slump lower than allowed by specification, water may be considered as a means to temper concrete to bring the slump back to within specification. This tempering may only be done prior to discharge with the permission of the Engineer. The gallons of water added to the concrete cannot exceed the allowance shown on the delivery ticket.

The concrete shall be completely discharged into the forms within one and one-half hours from the batch time stamped on the delivery ticket. This time may be extended if the temperature of the concrete is measured and the reading is below 90ºF. This time may also be reduced if the temperature of the concrete is over 90ºF. Rejected concrete shall be disposed of by the Contractor at its own expense.

The addition of chemical admixtures or air entrainment admixtures at the project site, to increase the workability or to alter the time of set, will only be permitted if prior approval has been granted by the Engineer. The addition of air entrainment admixtures at the project site will only be permitted by the producer's quality control staff. Follow-up quality control testing to verify compliance with the specification is the responsibility of the Contractor.

4. Acceptance Testing and Test Specimens: The facilities and concrete required for sampling, transport to the testing location in the field, performing field testing and for casting sample cylinders for compressive-strength determinations shall be furnished by the Contractor. The personnel for sampling and casting Acceptance specimens will be furnished by the Department and the number of specimens required will be determined by the Engineer.
The equipment for the aforementioned testing is provided for elsewhere in the contract.

(a) Temperature, Air Content and Slump: Field testing will be in accordance with AASHTO T-23, "Making and Curing Concrete Test Specimens in the Field" and will be performed at the point of placement and at a frequency determined by the Engineer.

Standard Mix Class	Air Content	Slump	Concrete Temperature
A (3300 psi)	6.0 +/- 1.5%	4" +/- 1"	60º-90ºF
C (3300 psi)			
F (4400 psi)			
Modified Standards[1]	6.0 +/- 1.5% [2]	4" +/- 1" [2]	
Special Provision Mix[3]	As specified	As specified	

[1] Modifications to Standard Mixes, including mixes placed by pumping, shall be reviewed by the Engineer prior to use. These include but are not limited to the use of chemical admixtures such as high range water reducing (HRWR) admixtures and the use of coarse aggregate sizes for that class not specified in Article M.03.

[2] If the only modification is the addition of HRWR, the maximum allowable slump shall be 7 inches.

[3] All concrete mixes with a design strength not shown in the table must be approved by the Engineer on a case-by-case basis. Limits on the plastic properties and strength requirements of these mixes are listed in the special provision.

(b) Acceptance Testing and Compressive Strength Specimens: Concrete samples shall be taken at the point of placement into the forms or molds. Representatives of the Engineer will sample the mix.

The Contractor shall provide and maintain facilities, acceptable to the Engineer, on the project site for sampling, transporting the initial sample, casting, safe storage and initial curing of the concrete test specimens as required by AASHTO T-23. This shall include but not be limited to a sampling receptacle, a means of transport of the initial concrete sample from the location of the concrete placement to the testing location, a level and protected area of adequate size to perform testing, and a specimen storage container capable of maintaining the temperature and moisture requirements for initial curing of Acceptance specimens. The distance from the location of concrete placement to the location of testing and initial curing shall be limited to 100' unless otherwise approved by the Engineer.
The specimen storage container described in this section is in addition to the concrete cylinder curing box provided for elsewhere in the contract specifications.
After initial curing, the test specimens will be transported by Department personnel and stored in the concrete cylinder curing box until such time as they can be transported to the Division of Materials Testing for strength evaluation.

(c) Sampling Procedure for Pumping: It is the responsibility of the contractor to provide concrete that meets specification at the point of placement. Samples of concrete shall be taken at the discharge end of the pump at the point of placement with the exception of underwater concrete. The contractor may submit an alternate location to provide a sample from the discharge end of the pump with verification

showing that the characteristics of the mix will not be altered from that of which would have been attained at the point of placement. The Engineer will review the documentation and other extenuating circumstances when evaluating the request.

In the case of underwater concrete the contractor shall submit the proposed sampling location with the submittals required in Subarticle 6.01.03-6(f) of this specification.

(d) Additional field testing: Additional field testing such as density and yield measurements may be required at the time of placement as determined by the Engineer.

5. Progression Cylinders and Compressive Strength Specimens: Progression Cylinders outlined in this section are field cured compressive strength specimens taken for information related to when a structure or segment of a structure can be loaded or put into service, adequacy of curing and protection of concrete in the structure, or when formwork or shoring may be removed from the structure. The information produced from strength results of Progression Cylinders will not be considered for acceptance of the concrete.

The personnel, equipment, and molds for sampling, casting, curing and testing of Progression Cylinders shall be furnished by the Contractor at no expense to the Department.

Sampling, casting, and field curing of the specimens shall be performed in accordance with AASHTO T23 by an ACI Concrete Field Testing Technician Grade 1 or higher and shall be witnessed by a representative of the Department.

The sample shall be taken at the point of placement into the forms or molds from one or more of the same truck loads that an Acceptance sample was taken from.

A minimum of two of cylinder results will be used to determine in-place strength.

Compression testing shall be performed in accordance with AASHTO T-22 by personnel approved by the Engineer.

A Certified Test Report in accordance with Section 1.06.07 shall be provided to the Engineer reporting the Progression Cylinder test results. A copy of the results of the compressive strength testing shall be provided to the Engineer at least 24 hours prior to any project activity that the results may control.

6. Handling and Placing Concrete: Concrete shall be handled, placed, and consolidated by methods acceptable to the Engineer that will not segregate the mix and will result in a dense homogeneous concrete. The methods used shall not cause displacement of reinforcing steel or other materials to be embedded in the concrete. Concrete shall not be placed until the forms and all materials have been inspected by the Engineer. All mortar from previous placements, debris, and foreign material shall be removed from the forms

and steel prior to commencing placement. The forms and sub grade shall be thoroughly moistened with water immediately before concrete is placed. All water that has ponded within the forms shall also be removed. Temporary form spreader devices shall not be left in place.

All laitance or unsound material shall be removed before placing substructure concrete onto the surface of any concrete placed underwater.

Placement of concrete for each section of the structure shall be performed continuously between construction or expansion joints as shown on the plans. The delivery rate, placing sequence and methods shall be such that fresh concrete is always placed and consolidated against previously placed concrete before initial set has occurred. The temperature of the concrete mixture during placement shall be maintained between 60ºF and 90ºF. During and after placement of concrete, care shall be taken not to damage the concrete or break the bond with reinforcing steel. Platforms for workers and equipment shall not be supported directly on any reinforcing steel. Forces that may damage the concrete shall not be applied to the forms or reinforcing steel.

(a) Sequence of Placement: The sequence of placement shall be in accordance with the contract documents or as permitted by the Engineer.

Concrete for integral horizontal members, such as caps, slabs, or footings shall not be placed until the concrete for the columns, substructure, culvert walls and other similar vertical members has achieved sufficient strength as stated in Sub article 6.01.03-1(m).

The concrete in arches shall be placed in such a manner as to load the formwork uniformly and symmetrically.

The base slab or footings of cast-in-place box culverts shall reach sufficient strength before the remainder of the culvert is constructed.

(b) Placement Methods: The Contractor shall notify the Engineer at least 24 hours in advance of his intention to place concrete.

Vibrators shall not be used to shift the fresh concrete horizontally. Vibrators shall be adequate to consolidate the concrete and integrate it with the previous lift.

The rate of concrete placement must not produce loadings that exceed those considered in the design of the forms.

The use of chutes and pipes for conveying concrete into the forms must be reviewed by the Engineer. Chutes shall be clean, lined with smooth watertight material and, when steep slopes are involved, shall be equipped with baffles or reverses. When the discharge must be intermittent, a hopper or other device for regulating the discharge shall be provided.

Aluminum shall not be permanently incorporated into the concrete unless otherwise specified.

When placing operations involve dropping the concrete more than five feet, the Contractor shall take action to prevent segregation of the mix and spattering of mortar on steel and forms above-the elevation of the lift being placed. This restriction shall not apply to cast-in-place pilings.

When using stay-in-place forms, concrete shall not be dropped more than three feet above the top of the forms, and the concrete shall be discharged directly over the beams or girders.

(c) **Pumping:** The Contractor shall use equipment specifically manufactured to pump concrete mixes and that meets the needs of the specific concrete placement.

(d) **Consolidation:** Unless otherwise specified, all concrete, except concrete placed under water shall be sufficiently consolidated by mechanical vibration immediately after placement.

The Contractor shall provide a sufficient number of commercially available mechanical immersion type vibrators to properly consolidate the concrete immediately after it is placed in the forms unless external form vibrators are used. The Contractor shall have an adequate number of operable vibrators available in case of breakdown.

External form vibrators may be used if submitted prior to concrete placement and reviewed by the Engineer.

Vibration shall not be applied directly to the reinforcement or hardened concrete. Special care shall be taken in placing and consolidating concrete around ornamental moulds, form liners and other embedded items. The vibrator shall not touch these items at any time.

(e) **Additional Requirements for Bridge Decks:** At least 15 days before the erection of the screed rails, the Contractor shall submit his screed erection plans, grades and sequence of concrete placement and proposed rate of placing concrete for review by the Engineer. These plans shall include details of equipment to be used in the placement and finishing of the concrete, including the number and type of personnel who will be engaged in placing the concrete. The screed equipment shall be a commercially available vibratory system. The use of wooden screeds is prohibited.

When setting screed rails for mechanical finishing, the Contractor shall take into consideration and make proper allowances for the deflection of the bridge superstructure due to all operations.

Screed and runway supports shall not be located on any stay-in-place metal form sheets, form supports or reinforcing steel. The Contractor shall operate the mechanical screed at least 24 hours prior to actual placement of the concrete to verify deck survey and equipment operations to the satisfaction of the Engineer.

Concrete shall be deposited in a uniform manner across the entire width being placed, and only 2 passes of the transverse screed will be permitted over a given deck area, unless otherwise allowed by the Engineer.

If the Contractor proposes to place concrete outside of daylight hours, an adequate lighting system must be provided.

Concrete shall be deposited in accordance with the placement sequence as noted on the plans. If no sequence is indicated, the Contractor shall provide a placement sequence to the Engineer for review. The placement sequence shall proceed in such a manner that the total deflection or settlement of supporting members, and the final finishing of the surface will occur before the initial set of the concrete takes place.

At construction joints, concrete shall not be placed against the previously placed concrete for at least 12 hours unless otherwise allowed by the Engineer.

(f) **Underwater Placement:** Concrete may only be placed under water within a cofferdam unless otherwise specified in the contract documents or otherwise allowed by the Engineer. Placement shall begin following inspection and acceptance of the depth and character of the foundation material by the Engineer.

Underwater concrete mixes are considered non-standard designs and shall be submitted to the Engineer for approval. Typically a minimum of ten percent additional cement than comparable non-underwater mixes will be required.

Underwater concrete shall be placed continuously with the surface of the concrete kept as horizontal as practical. To ensure thorough bonding, each succeeding layer shall be placed before the preceding layer has taken initial set. For large pours, more than one tremie or pump shall be used to ensure compliance with this requirement.

To prevent segregation, underwater concrete shall be placed in a compact mass, in its final position, by means of a tremie, concrete pump, or other approved method and shall not be disturbed. Still water shall be maintained at the point of deposit. Cofferdams shall be vented during the placement and curing of the concrete to equalize the hydrostatic pressure and thus prevent flow of water through the concrete.

If a tremie is used, the method of depositing the concrete shall be detailed in a submission to the Engineer as a working drawing for review. The tube shall have watertight couplings and shall permit the free movement of the discharge end over the area of the work.

(g) Mass concrete placement: Mass concrete placement shall be defined as any placement in which the concrete being cast has dimensions of 5 feet or greater in each of three different directions. For placements with a circular cross-section, a mass concrete placement shall be defined as any placement that has a diameter of 6 feet or greater and a height of 5 feet or greater. For all mass concrete placements, the mix temperature shall not exceed 85°F as measured at point of discharge into the forms. Any special concrete mix design proposed by the Contractor to meet the above temperature requirements shall be submitted to the Engineer for review.

7. Finishing Plastic Concrete: Unless otherwise specified in the contract documents, after concrete has been consolidated and prior to final curing, all surfaces of concrete that are not placed against forms shall be struck-off to the planned elevation or slope. The surface shall be finished by floating with an acceptable tool. While the concrete is still in a workable state, all construction and expansion joints shall be tooled with an edger. Joint filler shall be left exposed. For requirements on float finish, refer to Sub article 6.01.03-10, "Finishing Concrete Surfaces".

After completion of the placing and finishing operation and for at least 12 hours after the concrete has set, the Contractor shall not operate any equipment in the immediate vicinity of the freshly placed concrete if in the opinion of the Engineer; it could cause excessive vibration, movement or deflection of the forms.

The addition of water to the surface of the concrete to assist in finishing operations will not be permitted.

(a) Bridge Decks: After the concrete has been consolidated and brought to the proper elevation by the screed machine, it shall be finished by use of a suitable float. The Contractor shall not disturb the fresh concrete after it has been finished. All finishing work, including the application of the fog spray and placement of the curing mats, shall be performed from work bridges supported above the deck surface. A work bridge shall be made available to the Engineer for inspection of the concrete work.

Surfaces that are to be covered with a waterproofing membrane shall be finished to a smooth surface, free of mortar ridges and other projections and in accordance with the membrane manufacturer's recommendations.

Unless otherwise noted in the contract, the concrete wearing surfaces shall be given a skid-resistant texture by dragging, brooming, tining, or by a combination of these methods These methods shall be done after floating and at such time and in such manner that the desired texture will be achieved while minimizing displacement of the larger aggregate particles.

1. Dragging: The surface shall be finished by dragging a seamless strip of damp burlap over the surface. The burlap to be dragged shall consist of sufficient layers and have sufficient length in contact with the concrete to slightly groove the surface. The burlap shall be drawn longitudinally along the

surface in a slow manner so as to leave an even texture. The burlap shall be kept damp, clean, and free of particles of hardened concrete. The Contractor may propose an alternate material for the Engineer's consideration.

2. Tining: Tining shall be in a transverse direction using a wire broom, comb, or float having a single row of tines or fins. The tining grooves shall be between 1/16 inch and 3/16 inch wide and between 1/8 inch and 3/16 inch deep, spaced ½ inch to ¾ inch on centers. Tining shall be discontinued 12 inches from the curb line on bridge decks. The area adjacent to the curbs shall be given a light broom finish longitudinally. As an alternative, tining may be achieved using a machine designed specifically for tining or grooving concrete pavements.

The transverse grooving shall be performed when the grooves can be formed to a maximum depth of 3/16 inch with relative ease and without the walls of the grooves closing in on each other. The tining shall be aligned so as to prevent overlapping of grooves in any two successive transverse passes. The Contractor shall measure the depth of the grooves in the presence of the Engineer with an appropriate device to ensure compliance.

(b) Surface Testing and Correction: The completed surface shall be constructed in accordance with grades and cross slopes shown on the plans. The entire surface shall be checked by the Contractor in the presence of the Engineer, with an acceptable 10-foot straightedge. The surface shall not vary more than +/- 1/8 inch in 10 feet for decks which will not be covered with an overlay. The surface shall not vary more than +/- 1/4 inch in 10 feet for decks which will be covered with an overlay. Variances greater than this, which, in the opinion of the Engineer, may adversely affect the riding qualities of the surface shall be corrected; and this shall be done at the expense of the Contractor. The Contractor shall submit a corrective procedure to the Engineer for review and approval. This procedure shall correct such irregularities by such methods as but not limited to concrete planing or grooving.

8. Bearing Surfaces: Concrete surfaces under metallic masonry plates and elastomeric bearings shall have a float finish. After the concrete has set, the area which will be in contact with the masonry plate shall be ground as necessary to provide full and even bearing. The finished surface shall not vary from a straightedge laid on the surface in any direction within the limits of the masonry plate by more than 0.0625 in. Surfaces which fail to conform shall be ground or filled until acceptable to the Engineer.

9. Curing Concrete: All newly placed concrete shall be cured so as to prevent loss of water by use of one or more of the methods specified. If requested by the Engineer, the contractor shall furnish a curing plan.

The duration of the initial and final curing period in total shall continue uninterrupted for a minimum of seven days.

(a) Curing Methods:

1. Forms-In-Place Method: Formed surfaces of concrete may be cured by retaining the forms in place without loosening. During periods of hot weather, water shall be applied to the forms until the Engineer determines that it is no longer required.

2. Water Method: Exposed concrete surfaces shall be kept continuously wet by ponding, spraying, or covering with materials that are kept continuously and thoroughly wet. Such materials may consist of cotton mats, multiple layers of burlap, or other approved materials that do not discolor or otherwise damage the concrete.

3. Waterproof Cover Method: This method shall consist of covering exposed surfaces with a waterproof sheet material so as to prevent moisture loss from the concrete. The concrete shall be wet at the time the cover is installed. The sheets shall be of the widest practicable width and adjacent sheets shall overlap a minimum of 6.0 inch. to form a waterproof cover of the entire concrete surface and shall be adequately secured. Broken or damaged sheets shall be immediately repaired and the concrete shall be remoistened.

(b) Additional Requirements for Bridge Decks:

1. Curing Plan: The contractor shall submit to the Engineer, at least 14 days prior to the placement of concrete for the bridge deck, a detailed curing plan that describes the following: the initial and final curing durations, equipment and materials to be used for curing concrete and monitoring concrete temperature, and proposed primary and secondary water and heat sources.

2. Initial Curing Period: A water fog spray shall be used by the Contractor from the time of initial placement until the final curing period begins. The amount of fog spray shall be strictly controlled so that accumulations of standing or flowing water on the surface of the concrete shall not occur.

   Should atmospheric conditions render the use of fog spray impractical, the Contractor shall request approval by the Engineer to use a curing compound that meets the requirements of Section M.03 in lieu of a fog spray. The application shall be in accordance with the manufacturer's recommendation and be compatible with the membrane waterproofing.

3. Final Curing: After completion of finishing and as soon as any bleed water has dissipated and the concrete reaches sufficient strength to avoid marring, the Final curing period shall begin and the entire concrete surface shall be covered with water-retaining materials such as cotton mats, multiple layers of burlap, or other materials approved by the Engineer. Materials used shall be kept saturated by means of an acceptable sprinkler or wetting system. The

Contractor may cover the wet water-retaining material with a suitable polyethylene film to minimize evaporation during the curing period. The use of the polyethylene film does not relieve the Contractor from maintaining saturation of the curing materials.

4. Temperature Monitoring: The internal temperature of the concrete will be monitored with a calibrated continuous recording thermometer for a minimum of seven days. The air temperature at the concrete surface or the air temperature between the concrete surface and its protective covering will be monitored with a minimum of one recording thermometer.

   The number and placement of the thermometers will be determined by the Engineer. A minimum of two thermometers per concrete placement shall be provided by the contractor.

   Thermometers used to monitor curing temperatures will consist of one of the following types:

   a. Continuously Recording Thermometer: The thermometer shall be capable of continuously recording temperatures within a range of -4 ºF to 122 ºF for a minimum of 24 hours.

   b. Maximum–Minimum Recording Thermometer: For all placements, the thermometer shall be capable of recording maximum and minimum temperatures in a range of -4 ºF to 122 ºF.

10. Finishing Concrete Surfaces: Any minor repairs due to fins, bulges, offsets and irregular projections shall be performed immediately following the removal of forms. For areas of newly placed concrete that are honeycombed or segregated the contractor shall provide a written corrective procedure for review by the Engineer prior to the work being performed. Construction and expansion joints in the completed work shall be left carefully tooled and free of mortar and concrete. The joint filler shall be left exposed for its full length with clean and true edges.

The cavities produced by form ties and all other holes, broken corners or edges, and other defects shall be cleaned, saturated with water, pointed and trued with a mortar conforming to Section M.11.04. Cement similar in color to the exposed surface being repaired shall be added to the mortar. Mortar used in pointing shall be used within one hour of mixing. The concrete shall be finished as defined below if required and the cure continued as previously specified in "Curing Concrete."

Finishing work shall not interrupt the curing period unless permitted by the Engineer. The curing period may be extended to provide the minimum total number of days required.

Concrete surface finishes shall be classified as follows:

(a) Float Finish: This finish shall be achieved by placing an excess of material in the form and removing or striking off of such excess forcing the coarse aggregate below the mortar surface. Concave surfaces in which water will be retained will not be allowed. After the concrete has been struck off, the surface shall be thoroughly worked and floated. Before this last finish has set, the surface shall be lightly stripped with a fine brush to remove the surface cement film, leaving a fine-grained, smooth, but sanded texture. Curing, as specified elsewhere, shall follow. Any surfaces that will support appurtenances such as light standards, railing, or fences shall be finished in accordance with 6.01.03-8, "Bearing Surfaces".

(b) Rubbed Finish: The initial rubbing shall only be allowed within three days after placement. The entire surface shall be thoroughly wet with a brush and rubbed with a No. 16 Carborundum Stone or an abrasive of equal quality, bringing the surface to a paste. The rubbing shall be continued sufficiently to remove all form marks and projections, producing a smooth, dense surface without pits or irregularities. The paste formed by the rubbing may be finished by stripping with a clean brush, or it may be spread uniformly over the surface and allowed to re-set. If all or portions of the rubbed surface are unacceptable to the Engineer or a rubbed finish is not provided within three days after removal of forms, the Contractor will be directed to provide a grout clean down finish.

(c) Grout Clean-Down Finish: As soon as all cavities have been filled as required elsewhere and the cement mortar has set sufficiently, grout clean-down shall be performed. All burrs, unevenness, laitance, including that in air holes, and any other material which will adversely affect the bond of the grout to the concrete, shall be removed by acceptable methods. This cleaning shall be done from the top or uppermost part of the surface to be finished to the bottom.

A mixture of a fine aggregate and Portland cement shall be thoroughly blended while dry. The proportions shall be such that when mixed with the proper amount of water, the color will match that of the concrete to be finished. Water shall be added to this mixture in an amount which will bring the grout to a workable thick paint-like consistency.

The surface to be treated shall be thoroughly wetted with a sufficient amount of water to prevent the absorption of water from the grout. Grout shall then be applied to the wetted surface before setting of the grout occurs. Grout which has set shall not be re-tempered and shall be disposed of by the Contractor at his expense.

The grout shall be uniformly applied over the entire surface, completely filling all air bubbles and holes. Immediately after applying the grout, the surface shall be floated with a suitable float, scouring the surface vigorously. While the grout is still plastic, all excess grout shall be removed.

After the final rubbing is completed and the surface has dried, it shall be rubbed to remove loose powder and shall be left free from all unsound patches, paste, powder, and objectionable marks. Wetting, application and removal of excess grout shall be completed in one work shift.

All finished surfaces shall be cured for a minimum of 24 hours. Horizontal surfaces shall have a float finish and vertical exposed surfaces shall have a rubbed finish. A grout clean down finish may be substituted for a rubbed finish as noted in this section or as directed by the Engineer

11. Mortar, Grout, Epoxy and Joint Seal

(a) Mortar and Grout: This work consists of the making and placing of mortar and grout. At least 48 hours prior to the planned use, a copy of the installation instructions and MSDS sheet(s) shall be provided to the Engineer for review and concurrence of their applicability and for verification of proper hole sizes in concrete structures. Such uses include mortar for filling under masonry plates, mortar used to fill voids and repair surface defects, grout used to fill sleeves for anchor bolts, and mortar and grout for other such uses where required or approved.

Concrete areas to be in contact with the mortar or grout shall be cleaned of all loose or foreign material that would in any way prevent bond, and the concrete surfaces shall be flushed with water and allowed to dry until no free-standing water is present.

The mortar or grout shall completely fill and shall be tightly packed into recesses and holes, on surfaces, under structural members, and at other locations specified. After placing, all surfaces of mortar or grout shall be cured as previously specified under Sub article 6.01.03-9(a)-2 “Curing Concrete – Water Method" for a period of not less than three days.

(b) Epoxy: The epoxy shall be prepared and placed in accordance with the manufacturer's directions and with the equipment prescribed by the manufacturer. Instructions furnished by the supplier for the safe storage, mixing, handling and application of the epoxy shall be followed. Contents of damaged or previously opened containers shall not be used.

(c) Joint Seal: This work consists of sealing joints where shown on the plans or as otherwise directed by the Engineer.

Before placement of the sealing material, the joints shall be thoroughly cleaned of all scale, loose concrete, dirt, dust or other foreign matter. Projections of concrete into the joint space shall be removed. The joint shall be clean and dry before the sealing compound is applied.

The joint sealant shall be prepared and placed in accordance with the manufacturer's directions and with the equipment prescribed by the manufacturer. The sealing

compound shall be flush with, or not more than 1/8 inch above the adjacent surface of concrete, cutting off all excess compounds after the application. The joints shall be sealed in a neat and workmanlike manner and when the work is completed, the joints shall effectively seal against infiltration of moisture and water.

The Contractor shall arrange for, and have present at the commencement of the joint-sealing operation, a technically competent manufacturer's representative knowledgeable in the methods of installation of the sealant. The Contractor shall also arrange to have the representative present at such other times as the Engineer may request.

(d) Closed Cell Elastomer: The closed cell elastomer shall be of the thickness, size and type specified and installed as shown on the plans and shall be in accordance with Section M.03.

12. Application of Loads: Loads shall not be applied to concrete structures until the concrete has attained sufficient strength and, when applicable, sufficient pre-stressing and post tensioning has been completed, so that damage will not occur. The means to determine when the concrete has attained sufficient strength shall be the use of Progression cylinders as defined elsewhere in this specification, or other means approved in advance by the Engineer.

(a) Earth Loads: The placement of backfill shall not begin until the concrete is cured and has reached at least 80 percent of its specified strength unless otherwise permitted by the Engineer. The sequence of placing backfill around structures shall minimize overturning or sliding forces and flexural stresses in the concrete.

(b) Construction Loads: Light materials and equipment may be hand carried onto bridge decks only after the concrete has been in place at least 24 hours providing curing is not interfered with and the surface texture is not damaged.

Prior to the concrete achieving its specified compressive strength, any other live or dead loads imposed on existing, new, or partially completed portions of structures, shall not exceed the reduced load carrying capacity of the structure, or portion of structure. The Contractor may be required to submit to the Engineer calculations that verify these requirements are being met. The compressive strength of concrete (f' c) to be used in computing the load-carrying capacity shall be the smaller of the actual field compressive strength at the time of loading or the specified design strength of the concrete. The means to determine the actual field compressive strength shall be approved by the Engineer.

For post-tensioned structures, no live or dead loads shall be allowed on any span until the steel for that span has been tensioned.

(c) Precast concrete or steel girders shall not be placed on substructure elements until the substructure concrete has attained 85 percent of its specified strength.

No load shall be allowed on mortar or grout that has been in place less than 72 hours.

(d) Traffic Loads: The concrete deck will not be opened to traffic until at least 14 days after the last placement of deck concrete and until such concrete has attained its specified strength.

13. Dispute Resolution:

The basis of any dispute resolution is side-by-side and quality control testing by the Contractor or his representative. The Contractor and Engineer should perform independent testing on the material to reasonably establish the true characteristics of the material at the time of delivery. Absent of Contractor QC testing, the Engineer's test results will apply to the quantity of concrete represented by the sample, not to exceed 75 cubic yards.

Air Content: Contractor QC Testing must be performed by personnel qualified by The American Concrete Institute as an ACI Concrete Field Testing Technician Grade 1 or higher and performed in accordance with AASHTO T-23. If the Contractor's test results vary from those of the Engineer, the Contractor must immediately notify the Engineer of the difference and work in a cooperative fashion to determine the reasonable cause and recognize the valid test. Should there be agreement, then the result of the valid test will be used for acceptance and adjustment purposes for that lot of material. Should there not be an agreement as to the valid test, then an additional set of tests should be performed. Results of all valid tests on the same lot may be averaged and used for acceptance and adjustment purposes. Should the Contractor wish to perform additional QC testing on subsequent material, then the lot sizes may be adjusted to the amount of material included in that specific delivery. Any such QC testing must be witnessed and agreed to be valid by the Engineer.

Compressive Strength: Contractor QC testing for compressive strength must be performed in accordance with AASHTO T-22 by personnel approved by the Engineer. Samples used to dispute the Engineer's test results must be made simultaneously and from the same batch of concrete. Should the Contractor wish to pursue a dispute resolution with regard to compressive strength, the Contractor must submit in writing to the Engineer all test results, control charts, or other documentation that may be useful in determining if the specific lot(s) of material met the Contract specifications. The Engineer will consider the submittal and may average specific test results on the disputed lot(s) for acceptance and adjustment purposes. Destructive testing of any kind on the placed concrete structure will not be allowed.

6.01.04—Method of Measurement: This work will be measured for payment as follows:

1. Concrete: The quantity of concrete shall be the actual volume in cubic yards of the specified class or classes, with the exception of underwater concrete, completed and accepted within the neat lines as shown on the plans or as ordered by the Engineer.

When concrete is placed against bedrock, a maximum of six additional inches beyond the neat lines can be measured for payment.

No deduction will be made for panels, form liners, reinforcing bars, structural steel shapes or for pile heads. Also there will be no deduction made for the volume occupied by culvert and drainage pipes, scuppers, weep holes, public utility structures or any other opening, unless the surface area of any such single opening is 9 square feet or more.

In the case of culverts or drainage pipes, the computation of the surface area shall be based on the nominal diameter of the pipe, disregarding the thickness of the shell.

Miscellaneous materials necessary for completion of the work such as felt, mortar, grout, epoxy, joint seal, paraffin coating and closed cell elastomer will not be measured for payment.

Incidental work such as forming for anchor bolts, utilities, keyways, and sampling and testing will not be measured for payment.

2. Underwater Concrete: When underwater concrete is used, it will be measured by the volume in cubic yards within the actual horizontal limits of the cofferdam and between the elevations established by the Engineer.

3. Joint Filler: This material will be measured by the area in square feet of the joint filler, of the type and thickness specified, actually installed and accepted.

6.01.05—Basis of Payment: Payment for this work will be made as follows:

1. Concrete: Progress payments may be allowed for completed major labor elements of work such as forming, placing and curing. Prior to placement, the Contractor shall submit a proposed schedule of values for review and approval by the Engineer.

Payment for any lot of concrete allowed to remain in place will be adjusted when the field and laboratory testing of the material is completed. The quantity of concrete in each lot will be a maximum of 75 cubic yards. Payment for each lot of concrete will be adjusted based on the results of the Acceptance testing performed by the Engineer.

The following pay factors apply for Standard and Modified Standard Mix classes with regard to entrained air content:

Measured air (%)		**Pay factor (%)**
4.5 to 7.5		100
4.3 and 4.4	7.6 and 7.7	98
4.1 and 4.2	7.8 and 7.9	96
3.9 and 4.0	8.0 and 8.1	94
3.7 and 3.8	8.2 and 8.3	92
3.5 and 3.6	8.4 and 8.5	90
Concrete lots with less than 3.5% or greater than 8.5% entrained air will be rejected.		

The following pay factors apply for Standard and Modified Standard Mix classes with regard to compressive strength:

Compressive Strength (%)	**Pay factor (%)**
95 or greater	100
90 to 94.9	95
85 to 89.9	90
Concrete lots with less than 85% specified strength will be rejected.	

The adjusted payment for any lot of concrete that is allowed to remain in-place is the product of both pay factors, an index price of $400.00, and the quantity of concrete within the lot.

The Contractor must request permission from the Engineer to remove and replace a lot(s) of concrete to avoid a negatively adjusted payment. Any replacement material will be sampled, tested and evaluated in accordance with this specification.

No direct payment will be made for any labor, equipment or materials used during the sampling and testing of the concrete for Progression or Acceptance. The cost shall be considered as included in the general cost of the work or as stated elsewhere in the Contract. The work of transporting the concrete test specimens, after initial curing, for Acceptance testing will be performed by the Department without expense to the Contractor.

This material will be paid for at the contract unit price per cubic yard less any adjustments, for the specified class or classes, complete in place, which price shall include all materials, equipment, tools, labor and work incidental thereto, including heating, all admixtures, joint sealer roofing felt and closed cell elastomer, and any miscellaneous materials such as metal flashing and metal used in expansion joints and bearings.

2. Underwater Concrete: When this class of concrete is used, it will be paid for at the contract unit price per cubic yard for "Underwater Concrete," complete in place, which price shall include all materials, equipment, tools, labor and work incidental thereto.

3. Joint Filler: Expansion joint filler will be paid for at the contract unit price per square foot for "Joint Filler for Bridges" of the type and thickness specified, complete in place, which price shall include all materials, equipment, tools, labor and work incidental thereto.

Pay Item	Pay Unit
Concrete (Class A, C, F)	c.y.
Underwater Concrete	c.y.
Joint Filler for Bridges (Thickness and Type)	s.f.

SECTION M.03 PORTLAND CEMENT CONCRETE

Section M.03 *Portland Cement Concrete* is hereby replaced in its entirety with the following:

M.03.01 - Component Materials
M.03.02 - Mix Design Requirements
M.03.03 - Producer Equipment and Production Requirements
M.03.04 - Curing Materials
M.03.05 - Non Shrink, Non Staining Grout
M.03.06 - Expansive Cement for Anchoring
M.03.07 - Chemical Anchors
M.03.08 - Joint Materials
M.03.09 - Protective Compound/Sealers
M.03.10 - Formwork

M.03.01 – Component Materials

1. Coarse Aggregate: Coarse aggregate shall be broken stone, gravel, or reclaimed concrete aggregate defined as mortar-coated rock, consisting of clean durable fragments of uniform quality throughout. It shall be free from soft, disintegrated pieces, mud, dirt, organic or other injurious material and shall not contain more than one percent of dust by mass, as determined by AASHTO T-11. Coarse aggregate of a size retained on a 1-inch square opening sieve shall not contain more than 8% of flat or elongated pieces, whose longest dimension exceeds five times their maximum thickness. Heating or cooling of coarse aggregates may be required to meet concrete mix temperature requirements at time of placement.

(a) Soundness: When tested with magnesium sulfate solution for soundness, using AASHTO Method T 104, coarse aggregate shall not have a loss of more than 10% at the end of five cycles.

(b) Loss on Abrasion: When tested by means of the Los Angeles Machine, using AASHTO Method T 96, coarse aggregate shall not have a loss of more than 40%.

(c) Gradation: Grading and stone sizes of the coarse aggregate shall conform to Article M.01.01 as determined by AASHTO T-27. All coarse aggregate proportions shall be approved in advance by the Transportation Division Chief (TDC) as part of the Mix Design requirements.

(d) Storage: Aggregate stockpiles shall be located on smooth, hard, sloped/well-drained areas. Each source and gradation shall have an individual stockpile or bin. Aggregates shall be handled from stockpiles or other sources to the batching plant in such manner as to minimize segregation of the material. Aggregates that have become segregated, or mixed with earth or foreign material, shall not be used.

(e) Reclaimed Concrete Aggregate: In addition to the above requirements (a-d), when reclaimed concrete aggregate is proposed, it shall be tested for chloride content. If blended with virgin aggregate reclaimed aggregate shall be tested prior to being mixed. The test used to determine chloride content shall be that outlined in AASHTO T-260 "Sampling and Testing for Chloride Ion in Concrete and Concrete Raw Materials". Aggregate shall not be used if the chloride content as determined from this test exceeds 0.5 pound/cubic yard. Regardless of chloride content, reclaimed concrete aggregate shall not be used in concrete mixes used for pre-stressed concrete construction.

2. Fine Aggregate: Fine aggregate shall be natural or manufactured sand consisting of clean, hard, durable, uncoated particles of quartz or other rock, free from lumps of clay, soft or flaky material, mica, loam, organic or other injurious material. In no case shall fine aggregate containing lumps of frozen material be used. Heating or cooling of fine aggregates may be required to meet concrete mix temperature requirements at time of placement.

For continued shipments of fine aggregate from a given source, the fineness modulus of any sample shall not vary more than 0.20 from the base fineness modulus. The base fineness modulus for a source shall be established by the Engineer and may be revised based on current testing results.

(a) Fine Material: Fine aggregate shall contain not more than 3% of material finer than a #200 sieve, as determined by AASHTO T 11.

(b) Organic Impurities: Fine aggregate subjected to the colorimetric test shall not produce a color darker than Gardner Color Standard No. 11, using AASHTO T 21. If the fine aggregate fails to meet this requirement, the provisions of AASHTO M 6, Section 7.2.3, may apply.

(c) Gradation: Fine aggregate gradation shall be within the ranges listed in Table M.03.01-1 for any source. All fine aggregate proportions shall be approved in advance by the TDC as part of the Mix Design requirements.

(d) Soundness: When tested with magnesium sulfate solution for soundness, using AASHTO T 104, fine aggregate shall not have a loss of more than 10% at the end of five cycles. Fine aggregate that fails to meet this requirement, but meets all other requirements, may be allowed for use on a restricted basis with the approval of the Engineer on a case-by-case basis. Typically concrete forming any surface subject to polishing or erosion from running water will not be allowed to contain such material.

(e) Storage: Aggregate stockpiles shall be located on smooth, hard, sloped/well-drained areas. Each source and gradation shall have an individual stockpile or bin. Aggregates shall be handled from stockpiles or other sources to the batching plant in such manner as to minimize segregation of the material. Aggregates that have become segregated, or mixed with earth or foreign material, shall not be used.

Table M.03.01-1 TOTAL % PASSING BY WEIGHT

Sieve Size	3/8"	No. 4	No. 8	No. 16	No. 30	No. 50	No. 100
Percent Passing	100	95-100	80-100	50-85	25-60	10-30	2-10

3. Cement:

(a) Portland: Types I, II, and III Portland cement shall conform to the requirements of AASHTO M 85. Type I and Type III Portland cement shall be used only when required or expressly permitted by the project specification or the Engineer. The use of Type I or III will require that these mixtures be submitted as Non-standard Mix Designs. All cement shall be provided by a mill participating in the Departments' Cement Certification program. The requirements of the Certification Program are detailed in the Departments' Quality Assurance Program for Materials.

(b) Pre-Blended Cements: Binary or Ternary cements consisting of Portland Cement and supplemental cementitious materials may be used provided that all the requirements of Sub articles M.03.01- 3(a) and -3(c) are met.

(c) Replacement Materials: Unless already approved as a Standard Mix Design, any Contractor proposed Mix Designs with partial replacement of Portland Cement (PC) with fly ash or ground granulated blast furnace slag (GGBFS), must be submitted in writing to the Engineer for approval prior to the start of work, on a project-by-project basis. The type of material, source, and the percentage of the PC replaced must be clearly indicated. Upon request, a Certified Test Report for the cement replacement material must be provided to the Engineer for use during the Mix Design review.

1. Fly Ash: Fly ash to be used as a partial replacement for Portland cement shall meet the requirements of AASHTO M 295, either Class C or Class F, including the uniformity requirements of Table 2A. Loss on Ignition for either class of fly ash shall not exceed 4.0%. Fly ash may be used to replace up to a maximum of 20% of the required Portland cement. The fly ash shall be substituted on a weight basis, with a minimum of 1 pound of fly ash for 1 pound of Portland cement. Different classes of fly ash or the same class from different sources shall not be permitted on any single project without the written approval of the Engineer.

2. Ground Granulated Blast Furnace Slag (GGBFS): GGBFS used as a partial replacement for Portland cement shall conform to the requirements of AASHTO M 302/ASTM C989, Grade 100 or 120. As determined by the Engineer, GGBFS may be used to replace a maximum of 30% of the required Portland cement. The Engineer may restrict or prohibit the use of GGBFS if ambient temperatures anticipated during the placement and initial curing of the concrete are low. The GGBFS shall be substituted on a weight basis, with a minimum of 1 pound of slag for 1 pound of Portland cement. Different sources of GGBFS shall not be permitted on any single project without the written approval of the Engineer.

4. Water: All water used in the mixing of concrete shall be clear in appearance and free from oil, salt, acids, alkalis, sugar, and organic matter. Surface water may be used if not taken from shallow or muddy sources; classified as Class C or Class D on the Department of Energy and Environmental Protection (DEEP) Water Quality Classification mapping; accommodations have been made to prevent contaminants from entering the supply to the satisfaction of the Engineer. The Engineer may request that water from any surface or ground source be tested in accordance with AASHTO T26 and AASHTO D512 if the appearance or scent of the water is suspect. To be acceptable, the pH of the water must not be less than 6.0 or greater than 8.0 and Chloride Ion Concentration of the water must not exceed 250ppm. Potable water taken directly from a municipal or regional water supply may be used for mixing concrete without testing. Heating or cooling of water may be required to meet mix temperature requirements at time of placement.

5. Admixtures: All admixtures shall perform their function without injurious effects upon the concrete. If requested by the TDC, the Contractor shall present a certified statement from a recognized laboratory attesting to this requirement. A "recognized" laboratory is any cement and concrete laboratory approved and inspected regularly by the Cement and Concrete Reference Laboratory. The statement shall contain results of compression tests of cylinder specimens made with concrete utilizing the admixture(s) in proportions equal to those proposed by the Contractor. The results of at least 5 standard 6-inch x 12-inch cylinders of each mix design must be listed with the results of at least 5 like-sized cylinders not utilizing the admixture(s). Specimens must be made and cured in the laboratory in accordance with AASHTO T 126 and will be tested in accordance with AASHTO T 22.

(a) Air-Entraining Admixtures: In the event that air entrained concrete is required, an admixture conforming to the requirements of AASHTO M 154 may be used. Tests for 7 and 28-day compressive and flexural strengths and resistance to freezing and thawing are required whereas tests for bleeding, bond strength and volume change will not be required.

(b) Other Chemical Admixtures: In the event that concrete properties are specified that require the use of additional admixtures, or the Contractor proposes the use of additional admixtures to facilitate placement, the admixtures shall conform to the requirements of AASHTO M194M/M, including the one year performance data.

M.03.02 – Mix Design Requirements

1. Standard ConnDOT Mix Designs: Standard Mix Designs shall be designed in accordance with applicable sections of ACI 211 and ACI 318. The mixtures shall consist of Portland cement, fine aggregate, coarse aggregate, admixtures[1], and water proportioned in accordance with the following table. The mixtures shall also be designed to obtain the physical properties of plastic concrete as specified in Article 6.01.03

Table M.03.02-1

TYPE	28-day Minimum Compressive Strength (psi)	Water / Cement; or Water / Cement plus other approved Cementitious Material (by weight) Maximum	Minimum Cement[2] Required (pounds/ cubic yard)	Maximum Aggregate Size Required Section M.01.01
Class "A"	3300	0.53	615	No. 4
Class "C"	3300	0.53	658	No. 6
Class "F"	4400	0.44	658	No. 6
Pavement	3500	0.49	615	No. 4
Slope Paving	2200	0.69	455	No. 3

[1] Approved admixtures may be used in proportions recommended by the manufacturer.

[2] Portland Cement may be partially replaced within a Standard Mix Design by other approved cementitious material meeting the requirements of Article M.03.01-3(b) if permitted by the Engineer.

Mix designs must indicate the dosage of admixtures anticipated to provide plastic properties required in the project specification. Properties of standard classes of concrete in the plastic state are listed in Article 6.01.03

Standard Mix Designs are required to be designed and submitted by the concrete producers, and are approved by the Department on a standing basis. Submittal or re-approval of these Standard Mix Designs on an annual basis is not required. Previously approved producer-designed Standard Mixes that have a record of satisfactory performance may be utilized on Department projects unless there is a change in the gravimetric properties or the sources of any materials. Revisions to the Standard Mix Designs, which include changes in component sources, can be submitted at any time to the TDC, but must be approved prior to use on Department projects.

2. Non-Standard ConnDOT Mix Designs: Any proposed Mix Designs that do not comply with Table M.03.02-1 are required to be submitted 15 days prior to use on a project-by-project basis and be approved by the TDC prior to use. The use of an approved admixture with an otherwise approved Standard Mix Design is not considered non-standard.

All Non-standard Mix Designs used for load-bearing structures shall contain a minimum of 658 lbs/cubic yard of cementitious materials.

Concrete used in applications such as flowable fill or controlled low-strength material may be designed with less than 658 lbs/cubic yard of cementitious materials.

M.03.03 - Producer Equipment and Production Requirements

1. General Requirements: The source of the concrete must be approved by the Engineer prior to use on Department projects. Specifically the location and capacity of the central mix or dry

batch plant, and complement of truck mixers/haulers, shall be adequate for continuous placement of concrete on a typical Department project. Approval may be revoked at any time in accordance with Section 1.06.01.

(a) Inspection: The production facility supplying hydraulic cement concrete shall have a current Certification of Ready Mixed Concrete Production Facilities from the National Ready Mixed Concrete Association (NRMCA), or equivalent certification approved by the Engineer.

(b) In addition to the requirements of approved third party certification, the facility must produce batch tickets that conform to Sub article 6.01.03-3(a).

(c) Quality Control: The Contractor is responsible for all aspects of Quality Control (QC). As determined by the Engineer, should material delivered to a project not meet specification, the Contractor may be required to submit to the Engineer a corrective procedure for approval within 3 calendar days. The procedure must address any minor adjustments or corrections made to the equipment or procedures at the facility.

(d) Suspension: As determined by the Engineer, repeated or frequent delivery of deficient material to a Department project may be grounds for suspension of that source of material. A detailed QC plan that describes all QC policies and procedures for that facility may be required to formally address quality issues. This plan must be approved by the Engineer and fully implemented, prior to reinstatement of that facility.

2. Hand Mixed Concrete: Hand mixing shall be permitted only with the permission of the Engineer. Hand mixed batches shall not exceed 1/2 cubic yard in volume. Hand mixing will not be permitted for concrete to be placed under water.

M.03.04 - Curing Materials

1. Water: Any water source deemed acceptable by the Engineer for mixing concrete may be used to provide water for curing purposes. Surface water may be used if classified as Class C or Class D on the Department of Energy and Environmental Protection (DEEP) Water Quality Classification mapping and accommodations have been made to prevent contaminants from entering the supply to the satisfaction of the Engineer. In general water shall not be taken from shallow or muddy sources. In cases where sources of supply are relatively shallow, the intake pipe shall be enclosed to exclude silt, mud, grass, etc.; and the water in the enclosure shall be maintained at a depth of not less than 2 feet under the intake pipe.

2. Mats: Mats for curing concrete shall be capable of maintaining moisture uniformly on the surface of the concrete. The mats shall not contain any materials such as dyes, sugar, etc., that may be injurious to the concrete.

The length or width of the mats shall be sufficient to cover all concrete surfaces being cured. Should more than one mat be required, sufficient overlap must be provided by the Contractor as determined by the Engineer.

3. Liquid Membrane-Forming Compound: Liquid membrane-forming compound shall conform to the requirements of AASHTO M 148 Type 2, Class B, or shall be a water-soluble linseed oil-based compound conforming to the requirements of AASHTO M 148, Type 2.

4. White Polyethylene Sheeting (Film): White polyethylene sheeting (film) shall conform to the requirements of AASHTO M 171.

M.03.05 - Non Shrink, Non Staining Grout

1. Bagged (pre-mixed): Bagged (pre-mixed) formulations of non-shrink grout shall meet the requirements of ASTM C 1107. The grout must be mixed with potable water for use. The grout shall be mixed to a flowable consistency as determined by ASTM C 230. All bagged material shall be clearly marked with the manufacturer's name, date of production, batch number, and written instructions for proper mixing, placement and curing of the product.

2. Bulk: The Contractor may formulate and design a grout mix for use on the project in lieu of using a pre-bagged product. The Contractor must obtain prior written approval of the Engineer for any such proposed Mix Design. Any such Mix Design shall include the proportions of hydraulic cement, potable water, fine aggregates, expansive agent, and any other necessary additive or admixture. This material shall meet all of the same chemical and physical requirements as must the pre-bagged grout, in accordance with ASTM C 1107.

M.03.06 – Expansive Cement for Anchoring

The premixed anchoring cement shall be non-metallic, concrete gray in color and prepackaged. The mix shall consist of hydraulic cement, fine aggregate, expansive admixtures and water conforming to the following requirements:

1. The anchoring cement shall have a minimum 24 hour compressive strength of 2,600 psi when tested in accordance with ASTM C 109.

2. The water content of the anchoring cement shall be as recommended by the manufacturer. Water shall conform to the requirements of Sub article M.03.01-4.

The Contractor shall provide a Certified Test Report and Materials Certificate for the premixed anchoring cement in conformance with Article 1.06.07. The Contractor shall also provide, when requested by the Engineer, samples of the premixed anchoring cement for testing and approval.

M.03.07 – Chemical Anchors

Chemical anchor material must be listed on the Departments' Qualified Products List and approved by the Engineer for the specified use.

The chemical anchor material shall be epoxy or polyester polymer resin. It shall not contain any metals or other products that promote corrosion of steel. The Contractor shall supply the Engineer with a Certified Test Report and Materials Certificate for the chemical anchor material

in conformance with Article 1.06.07. When requested by the Engineer, the Contractor shall also provide samples of the chemical anchor material.

M.03.08 – Joint Materials

1. Transverse Joints for Concrete Pavement:

Transverse joints shall consist of corrosion resistant load transfer devices, poured joint seal and in addition, in the case of expansion joints, expansion joint filler all conforming to the following requirements:

(a) The corrosion resistant load transfer device shall be coated steel or sleeved steel or be made of corrosion resistant material. The dimensions of any devices used shall be as shown on the plans, exclusive of any coating or sleeving. Core material of coated or sleeved metallic devices shall be steel meeting the requirements of AASHTO M 255M/M 255 Grade 520, or steel having equal or better properties and approved by the Engineer. Nonmetallic devices shall meet the various strength requirements applicable to metallic devices as well as all other requirements stated herein.

(b) All coated load transfer devices shall conform to the requirements of AASHTO M 254. Uncoated or sleeved load transfer devices shall meet the applicable physical requirements of AASHTO M 254. The use of field applied bond breakers will not be permitted.

(c) The basis of acceptance for corrosion resistant load transfer devices shall be the submission by the Contractor of a minimum of two samples accompanied by Certified Test Reports conforming to the requirements of Article 1.06.07 demonstrating that the load transfer device conforms to the requirements of AASHTO M 254 for the type of device supplied. The Engineer reserves the right to reject any load transfer device which he deems unsatisfactory for use.

2. Joint Filler for Concrete Curbing

Expansion joint filler shall be either preformed expansion joint filler or wood joint filler as indicated on the plans and shall conform to the following requirements:

(a) Preformed expansion joint filler shall be the bituminous cellular type and shall conform to the requirements of AASHTO M 213.

(b) Boards for wood joint filler shall be planed on two sides and shall be either redwood, cypress or white pine. Redwood and cypress boards shall be of sound heartwood. White pine boards shall be of sound sapwood. Occasional small, sound knots and medium surface checks will be permitted provided the board is free of any defects that will impair its usefulness for the purpose intended. The joint filler may be composed of more than one length of board in the length of the joint, but no board of a length less than 6 feet may be used; and the separate boards shall be held securely to form a straight joint. Boards composed of pieces that are jointed and glued shall be considered as one board.

(c) Dimensions shall be as specified or shown on the plans; and tolerances of plus 1/16-inch thickness, plus 1/8-inch depth and plus 1/4-inch length will be permitted.

(d) All wood joint filler boards shall be given a preservative treatment by brushing with creosote oil conforming to AASHTO M 133. After treatment, the boards shall be stacked in piles, each layer separated from the next by spacers at least 1/4 inch thick; and the boards shall not be used until 24 hours after treatment. Prior to concreting, all exposed surfaces of the wood filler shall be given a light brush coating of form oil.

(e) Testing of board expansion joint filler shall be in accordance with pertinent sections of AASHTO T 42.

3. Longitudinal Joint Devices: The metal used in the fabrication of longitudinal joint devices shall conform to ASTM requirements for each type of metal used. The dimensions shall be as shown on the plans.

4. Expansion Joint Fillers for Bridges and Bridge Bearings

(a) Preformed expansion joint filler for bridges shall conform to the requirements of AASHTO M 153, Type I or Type II.

(b) Pre-molded expansion joint filler for bridge bearings shall conform to the requirements of AASHTO M 33.

5. Joint Sealants

(a) Joint Sealer for Pavement: The joint sealer for pavement shall be a rubber compound of the hot-poured type and shall conform to the requirements of AASHTO M 324 Type II unless otherwise noted on the plans or in the special provisions.

(b) Joint Sealer for Structures: Structure joint sealers shall be one of the following type sealants:

1. Where "Joint Seal" is specified on the plans, it shall conform to the Federal Specifications SS-S-200-E (Self-leveling type), TT-S-0227E (COM-NBS) Type II-Class A (Non-sag type), or one component polyurethane-base elastomeric sealants conforming to the Federal Specification TT-S-00230C Type II-Class A or an approved equal.

   A Certified Test Report will be required in accordance with Article 1.06.07, certifying the conformance of the sealant to the requirements set forth in the Federal Specification. Should the consignee noted on a Certified Test Report be other than the Prime Contractor, a Materials Certificate shall be required to identify the shipment.

2. Where "Silicone Joint Sealant" is specified on the plans, it shall be one of the following or an approved equal:

   Sealant, manufactured by the Dow Corning Corporation, Midland, Michigan Dow Corning 888 Silicone Joint Sealant or Dow Corning 888-SL Self-Leveling Silicone Joint 48686-0994.

6. **Closed Cell Elastomer:** The closed cell elastomer shall conform to the requirements of ASTM D1056, Grade RE-41 B2. The elastomer shall have a pressure-sensitive adhesive backing on one side.

   The Contractor shall deliver the closed cell elastomer to the job site a minimum of 30 days prior to installation. Prior to the delivery of the closed cell elastomer, the Contractor shall notify the Engineer of the date of shipment and the expected date of delivery. Upon delivery of the closed cell elastomer to the job site, the Contractor shall immediately notify the Engineer.

   Each separate length, roll or container shall be clearly tagged or marked with the manufacturer's name, trademark and lot number. A lot is defined as that amount of closed cell elastomer manufactured at one time from one batch of elastomer. A batch is defined as that amount of elastomer prepared and compounded at one time. The Contractor shall furnish a Certified Test Report in accordance with Article 1.06.07, confirming the conformance of the closed cell elastomer to the requirements set forth in these specifications. Should the co-signee noted on a Certified Test Report be other than the Prime Contractor, a Materials Certificate shall be required to identify shipment.

   The Contractor shall furnish a 1 ft. length of closed cell elastomer in each lot for purposes of inspection and testing by the Engineer. The Engineer will cut a 1 ft. sample from each lot and inspect the sample for conformance to size, and perform physical tests on the sample as deemed necessary.

   The Engineer shall reject any lot or portion of a lot that does not conform to the requirements stated herein. A rejected lot or portion of a lot may be resubmitted provided the Contractor has removed or corrected, in a manner acceptable to the Engineer, all non-conforming material.

M.03.09 – Protective Compound/Sealers

The brand and type of material must be listed on the Department’s Qualified Products List and approved by the Engineer for the specified use.

M.03.10 – Formwork

1. **Stay-in-place Forms:** Material for stay-in-place metal forms shall be made of zinc-coated (galvanized) steel sheet conforming to ASTM Specification A653 (Structural Steel (SS) Grade 33 through 80). The minimum thickness shall be 20 gage. Coating weight shall conform to ASTM A924, Class G235, and shall otherwise meet all requirements relevant to steel stay-in-place metal forms and the placing of concrete as specified herein and as noted in the contract documents.

   Form supports shall either be fabricated and conform to the same material requirements as the forms, or be fabricated from structural steel conforming to the requirements of ASTM A36 and shall be hot-dip galvanized in accordance with ASTM A123.

   Lightweight filler material for forms shall be as recommended by the form manufacturer.

2. **Temporary Forms and Falsework:** Forms and Falsework shall be of wood, steel or other material approved by the Engineer. This approval does not relieve the Contractor from employing adequately sized materials of sufficient rigidity to prevent objectionable distortion of the formed concrete surfaces caused by pressure of the plastic concrete and other loads incidental to the construction operations.

SECTION M.04 - BITUMINOUS CONCRETE

Section M.04 is being deleted in its entirety and replaced with the following:

M.04.01—Bituminous Concrete Materials and Facilities
M.04.02—Mix Design and Job Mix Formula (JMF)
M.04.03—Production Requirements

M.04.01—Bituminous Concrete Materials and Facilities: Each source of material, and facility or plant used to produce and test bituminous concrete must be qualified on an annual basis by the Engineer. Test Procedures and Specifications referenced herein are in accordance with the latest AASHTO and ASTM Standard Test Procedures and Specifications. Such references when noted with an (M) have been modified by the Engineer and are detailed in Table M.04.03-6.

The Contractor shall submit to the Engineer all sources of coarse aggregate, fine aggregate, mineral filler, PG binder, and if applicable any additives such as but not limited to anti-strip, warm mix, and polymer modifiers. The Contractor shall submit a Material Safety Data Sheet (MSDS) for each grade of binder, and additive to be used on the Project. The Contractor shall not change any material sources without prior approval of the Engineer.

An adequate quantity of each size aggregate, mineral filler, bitumen, and additives, shall be maintained at the bituminous concrete plant site at all times while the plant is in operation to ensure that the plant can consistently produce bituminous concrete mixtures that meet the job mix formula (JMF) as specified in Article M.04.02. The quantity of such material shall be reviewed by the Engineer on an individual plant basis and is dependent upon the plant's daily production capacity. A total quantity of any material on site that amounts to less than one day's production capacity may be cause for the job mix formula to be rejected.

1. Coarse Aggregate:

a. Requirements: The coarse aggregate shall consist of clean, hard, tough, durable fragments of crushed stone or crushed gravel of uniform quality. Aggregates from multiple sources of supply must not be mixed or stored in the same stockpile.

b. Basis of Approval: The request for approval of the source of supply shall include a washed sieve analysis in accordance with AASHTO T 27. The Gsa, Gsb, and Pw_a shall be determined in accordance with AASHTO T 85. The coarse aggregate must not contain more than 1% crusher dust, sand, soft disintegrated pieces, mud, dirt, organic and other injurious materials. When tested for abrasion using AASHTO T 96, the aggregate loss must not exceed 40%. When tested for soundness using AASHTO T 104 with a magnesium sulfate solution, the coarse aggregate must not have a loss exceeding 10% at the end of 5 cycles.

For all bituminous mixtures, materials shall also meet the coarse aggregate angularity criteria as specified in Tables M.04.02-2 thru M.04.02-4 for blended aggregates retained

Field Code Changed

on the #4 sieve when tested according to ASTM D 5821. The amount of aggregate particles of the coarse aggregate blend retained on the #4 sieve that are flat or elongated shall be determined in accordance with ASTM D 4791 and shall not exceed 10% by weight when tested to a 3:1 ratio, as shown in Tables M.04.02-2 thru M.04.02-4.

2. Fine Aggregate:

Requirements: The fine aggregate from each source quarry/pit deposit shall consist of clean, hard, tough, rough-surfaced and angular grains of natural sand; manufactured sand prepared from washed stone screenings; stone screenings, slag or gravel; or combinations thereof, after mechanical screening or manufactured by a process approved by the Engineer. The Contractor is prohibited from mixing two or more sources of fine aggregate on the ground for the purpose of feeding into a plant.

a. All fine aggregate shall meet the listed criteria shown in items #1 thru #7 of Table M.04.01-1. Table M.04.01-1 indicates the quality tests and criteria required for all fine aggregate sources. Individually approved sources of supply shall not be mixed or stored in the same stockpile. The fine aggregates must be free from injurious amounts of clay, loam, and other deleterious materials.

For Superpave mixtures, in addition to the above requirements, the fine aggregate angularity shall be determined by testing the materials passing the #8 sieve in accordance with AASHTO T 304, Method A. Qualification shall be based on the criteria listed in Tables M.04.02-2 thru M.04.02-4. The fine aggregate shall also be tested for clay content as a percentage contained in materials finer than the #8 sieve in accordance with AASHTO T 176.

Table M.04.01-1: Fine Aggregate Criteria by Pit/Quarry Source

Item	Title	AASHTO Protocol(s)	Criteria
1	Grading	T 27 & T 11	100% Passing 3/8 inch 95% Passing the #4 min.
2	Absorption	T 84	3% maximum
3	Plasticity limits	T 90	0 or not detectable
4	L.A. Wear	T 96	50% maximum(fine agg. particle size # 8 and above)
5	Soundness by Magnesium Sulfate	T 104	20% maximum @ 5 cycles
6	Clay Lumps and Friable Particles	T 112	3% maximum
7	Deleterious Material	As determined by the Engineer	Organic or inorganic calcite, hematite, shale, clay or clay lumps, friable materials, coal-lignite, shells, loam, mica, clinkers, or organic matter (wood, etc). -Shall not contain more than 3% by mass of any individual listed constituent and not more than 5% by mass in total of all listed constituents.
8	Petrographic Analysis	ASTM C 295	Terms defined in Section M.04.01-2c.

Field Code Changed

b. Basis of Approval: A Quality Control Plan for Fine Aggregate (QCPFA) provided by the Contractor shall be submitted for review and approval for each new source documenting how conformance to Items 1 through 7 as shown in Table M.04.01-1 is monitored. The QCPFA must be resubmitted any time the process, location or manner of how the fine aggregate (FA) is manufactured changes, or as requested by the Engineer. The QCPFA must include the locations and manufacturing processing methods. The QCPFA for any source may be suspended by the Engineer due to the production of inconsistent mixtures.

The Contractor shall submit all test results to the Engineer for review. The Contractor shall also include a washed sieve analysis in accordance with AASHTO T 27/T 11. Any fine aggregate component or final combined product shall have 100% passing the 3/8 inch sieve and a minimum of 95% passing the # 4. The Gsa, Gsb, and Pw_a shall be determined in accordance with AASHTO T 84.

The Contractor will be notified by the Engineer if any qualified source of supply fails any portion of Table M.04.01-1. One retest will be allowed for the Contractor to make corrections and/or changes to the process. If, upon retest, the material does not meet the requirements of items 1-7, additional testing will be required in accordance with item 8.

c. The Contractor may provide a Petrographic analysis of the material performed by a third party acceptable to the Engineer at its' own expense. The Contractor shall submit the results of the analysis with recommended changes to the manufacturing process to the Engineer. The Contractor shall submit fine aggregate samples for testing by the Engineer after the recommended changes have been made.

The Contractor may request the use of such fine aggregate on select project(s) for certain applications of bituminous concrete pavement. Such material will be monitored for a period no less than 48 months, at no cost to the State. Terms of any evaluation and suitable application will be determined by the Engineer.

3. Mineral Filler:

a. Requirements: Mineral filler shall consist of finely divided mineral matter such as rock dust, including limestone dust, slag dust, hydrated lime, hydraulic cement, or other accepted mineral matter. At the time of use it shall be freely flowing and devoid of agglomerations. Mineral filler shall be introduced and controlled at all times during production in a manner acceptable to the Engineer.

b. Basis of Approval: The request for approval of the source of supply shall include the location, manufacturing process, handling and storage methods for the material. Mineral filler shall conform to the requirements of AASHTO M-17

Field Code Changed

4. Liquid Bituminous Materials:

a. General:

i Liquid PG binders shall be uniformly mixed and blended and be free of contaminants such as fuel oils and other solvents. Binders shall be properly heated and stored to prevent damage or separation.

ii. The blending at mixing plants of PG binder from different suppliers is strictly prohibited. Contractors who blend PG binders will be classified as a supplier and will be required to certify the binder in accordance with AASHTO R-26(M). The binder shall meet the requirements of AASHTO M-320(M) and AASHTO R-29(M). The Contractor shall submit a Certified Test Report and bill of lading representing each delivery in accordance with AASHTO R-26(M). The Certified Test Report must also indicate the binder specific gravity at 77ºF; rotational viscosity at 275ºF and 329ºF and the mixing and compaction viscosity-temperature chart for each shipment.

iii. The Contractor shall submit the name(s) of personnel responsible for receipt, inspection, and record keeping of PG binder materials. Contractor plant personnel shall document specific storage tank(s) where binder will be transferred and stored until used, and provide binder samples to the Engineer upon request. The person(s) shall assure that each shipment (tanker truck) is accompanied by a statement certifying that the transport vehicle was inspected before loading and was found acceptable for the material shipped and that the binder will be free of contamination from any residual material, along with two (2) copies of the bill of lading.

iv. Basis of Approval: The request for approval of the source of supply shall list the location where the material will be manufactured, and the handling and storage methods, along with necessary certification in accordance with AASHTO R-26(M). Only suppliers/refineries that have an approved "Quality Control Plan for Performance Graded Binders" formatted in accordance with AASHTO R-26(M) will be allowed to supply PG binders to Department projects.

b. Neat Performance Grade (PG) Binder:

i. PG binder shall be classified by the supplier as a "Neat" binder for each lot and be so labeled on each bill of lading. Neat PG binders shall be free from modification with: fillers, extenders, reinforcing agents, adhesion promoters, thermoplastic polymers, acid modification and other additives, and shall indicate such information on each bill of lading and certified test report.

ii. The asphalt binder shall be Performance Grade PG 64-22.

Field Code Changed

c. Modified Performance Grade (PG) Binder

Unless otherwise noted, the asphalt binder shall be Performance Grade PG 76-22 asphalt modified with a Styrene-Butadiene-Styrene (SBS) polymer. The polymer modifier shall be added at either the refinery or terminal and delivered to the bituminous concrete production facility as homogenous blend. The stability of the modified binder shall be verified in accordance with ASTM D7173 using the Dynamic Shear Rheometer (DSR). The DSR G*/sin(δ) results from the top and bottom sections of the ASTM D7173 test shall not differ by more than 10%. The results of ASTM D7173 shall be included on the Certified Test Report. The binder shall meet the requirements of AASHTO M-320(M) and AASHTO R-29(M).

d. Warm Mix Additive or Technology:

i. The warm mix additive or technology must be listed on the NEAUPG Qualified Warm Mix Asphalt (WMA) Technologies List at the time of bid, which may be accessed online at http://www.neaupg.uconn.edu/wma_info.html.

ii. The warm mix additive shall be blended with the asphalt binder in accordance with the manufacturer's recommendations.

iii. The blended binder shall meet the requirements of AASHTO M-320(M) and AASHTO R-29(M) for the specified binder grade. The Contractor shall submit a Certified Test Report showing the results of the testing demonstrating the binder grade. In addition, it must include the grade of the virgin binder, the brand name of the warm mix additive, the manufacturer's suggested rate for the WMA additive, the water injection rate (when applicable) and the WMA Technology manufacturer's recommended mixing and compaction temperature ranges.

iv. Cut-backs (medium cure type);

i. Requirements: The liquid petroleum materials shall be produced by fluxing an asphalt base with appropriate petroleum distillates to produce the grade specified.

ii. Basis of Approval: The request for approval of the source of supply shall be submitted at least seven days prior to its use listing the location where the materials will be produced, and manufacturing, processing, handling and storage methods. The Contractor shall submit a Certified Test Report in accordance with Section 1.06 and a Material Safety Data Sheet (MSDS) for the grade to be used on the Project. The liquid asphalt shall be MC-250 conforming to AASHTO M-82.

Field Code Changed

e. Emulsions

i. Requirements: The emulsified asphalt shall be homogeneous and not be used if exposed to freezing temperatures.

ii. Basis of Approval**:** The request for approval of the source of supply must include the location where the materials will be produced, and manufacturing, processing, handling and storage methods.

1. Emulsified asphalts shall conform to the requirements of AASHTO M-140. Materials used for tack coat shall not be diluted and meet grade RS-1. When ambient temperatures are 80˚F and rising, grade SS-1 or SS-lh may be substituted if accepted by the Engineer. Each shipment shall be accompanied with a Certified Test Report listing Saybolt viscosity, residue by evaporation, penetration of residue, and weight per gallon.

2. Cationic emulsified asphalt shall conform to the requirements of AASHTO M-208(M). Materials used for tack coat shall not be diluted and meet grade CRS-1. The settlement and demulsibility test will not be performed unless deemed necessary by the Engineer. When ambient temperatures are 80˚F and rising, grade CSS-1 or CSS-lh may be substituted if accepted by the Engineer. Each shipment shall be accompanied with a Certified Test Report listing Saybolt viscosity, residue by evaporation, penetration of residue, and weight per gallon.

5. Reclaimed Asphalt Pavement (RAP):

a. Requirements: RAP shall consist of asphalt pavement constructed with asphalt and aggregate reclaimed by cold milling or other removal techniques approved by the Engineer. For bituminous concrete mixtures containing RAP, the Contractor shall submit a JMF in accordance with Article M.04.02 to the Engineer for review.

b. Basis of Approval: The RAP material will be accepted on the basis of one of the following criteria:

i. When the source of all RAP material is from pavements previously constructed on Department projects, the Contractor shall provide a materials certificate listing the detailed locations and lengths of those pavements and that the RAP is only from those locations listed.

ii. When the RAP material source or quality is not known, the Contractor shall test the material and provide the following information along with a request for approval to the Engineer at least 30 calendar days prior to the start of the paving operation. The request shall include a material certificate stating that the RAP consists of aggregates that meet the specification requirements of sub articles M.04.01-1 through 3 and that the binder in the RAP is substantially free of solvents, tars and other contaminants. The Contractor is prohibited from using unapproved material on Department projects

Field Code Changed

and shall take necessary action to prevent contamination of approved RAP stockpiles. Stockpiles of unapproved material shall remain separate from all other RAP materials at all times. The request for approval shall include the following:

1. A 50-pound sample of the RAP to be incorporated into the recycled mixture.
2. A 25-pound sample of the extracted aggregate from the RAP.
3. A statement that RAP material has been crushed to 100% passing the ½ inch sieve and remains free from contaminants such as joint compound, wood, plastic, and metals.

6. Crushed Recycled Container Glass (CRCG):

a. Requirements: The Contractor may propose to use clean and environmentally-acceptable CRCG in an amount not greater than 5% by weight of total aggregate.

b. Basis of Approval: The Contractor shall submit to the Engineer a request to use CRCG. The request shall state that the CRCG contains no more than 1% by weight of contaminants such as paper, plastic and metal and conform to the following gradation:

CRCG Grading Requirements	
Sieve Size	Percent Passing
3/8-inch	100
No. 4	35-100
No. 200	0.0-10.0

7. Joint Seal Material:

Requirements: Joint seal material shall be a hot-poured rubber compound intended for use in sealing joints and cracks in bituminous concrete pavements. Joint seal material must meet the requirements of AASHTO M-324 – Type 2.

8. Plant Requirements:

a. Mixing Plant and Machinery:

The mixing plant used in the preparation of the bituminous concrete shall comply with AASHTO M-156(M)/ASTM D 995 for a Batch Plant or a Drum Dryer Mixer Plant, and be approved by the Engineer.

b. Storage Silos:

For all mixes, the Contractor may use silos for short-term storage of Superpave mixtures with prior notification and approval of the Engineer. A silo must have heated cones and an unheated silo cylinder if it does not contain a separate internal heating system. Prior approval must be obtained for storage times greater than those indicated. When multiple

Field Code Changed

silos are filled, the Contractor shall discharge one silo at a time. Simultaneous discharge of multiple silos is not permitted.

Type of silo cylinder	Maximum storage time for all classes (hr)	
	HMA	WMA/PMA
Open Surge	4	Mfg Recommendations
Unheated – Non-insulated	8	Mfg Recommendations
Unheated – Insulated	18	Mfg Recommendations
Heated – No inert gas	TBD by the Engineer	

c. Documentation System: The mixing plant documentation system shall include equipment for accurately proportioning the components of the mixture by weight and in the proper order, controlling the cycle sequence and timing the mixing operations. Recording equipment shall monitor the batching sequence of each component of the mixture and produce a printed record of these operations on each delivery ticket, as specified herein. Material feed controls shall be automatically or manually adjustable to provide proportions within the tolerances listed below for any batch size.

An asterisk (*) shall be automatically printed next to any individual batch weight(s) exceeding the tolerances in ASTM D 995 section 8.7.3. The entire batching and mixing interlock cut-off circuits shall interrupt and stop the automatic batching operations when an error exceeding the acceptable tolerance occurs in proportioning.

There must be provisions so that scales are not manually adjusted during the printing process. In addition, the system shall be interlocked to allow printing only when the scale has come to a complete rest. A unique printed character (m) shall automatically be printed on the truck and batch plant printout when the automatic batching sequence is interrupted or switched to auto-manual or full manual during proportioning. For each day's production, each project shall be provided a clear, legible copy of these recordings on each delivery ticket.

d. Aggregates: The Contractor shall ensure that aggregate stockpiles are managed to provide uniform gradation and particle shape, prevent segregation and cross contamination in a manner acceptable to the Engineer. For drum plants only, the Contractor shall determine the percent moisture content at a minimum, prior to production and half way through production.

e. Mixture: The dry and wet mix times shall be sufficient to provide proper coating (minimum 95% as determined by AASHTO T 195(M)) of all particles with bitumen and produce a uniform mixture.

The Contractor shall make necessary adjustments to ensure all types of bituminous concrete mixtures contain no more than 0.5% moisture throughout when tested in accordance with AASHTO T 329.

Field Code Changed

f. RAP: The Contractor shall indicate the percent of RAP, the moisture content (as a minimum determined twice daily – prior to production and halfway through production), and the net dry weight of RAP added to the mixture on each truck ticket. For each day of production, the production shall conform to the job mix formula and RAP percentage and no change shall be made without the prior approval of the Engineer.

g. Asphalt Binder: The last day of every month, a binder log shall be submitted when the monthly production for the Department exceeds 5000 tons. Blending of PG binders from different suppliers or grades at the bituminous concrete production facility is strictly prohibited.

h. Warm mix additive: For mechanically foamed WMA, the maximum water injection rate shall not exceed 2.0% water by total weight of binder and the water injection rate shall be constantly monitored during production.

i. Field Laboratory: The Contractor shall furnish the Engineer an acceptable field laboratory at the production facility to test bituminous concrete mixtures during production. The field laboratory shall have a minimum of 300 square feet, have a potable water source and drainage in accordance with the CT Department of Public Health Drinking Water Division, be equipped with all necessary testing equipment as well as with a PC, printer, and telephone with a dedicated hard-wired phone line. In addition, the PC shall have a high speed internet connection with a minimum upstream of 384 Kbps and a functioning web browser with unrestricted access to https://ctmail.ct.gov. This equipment shall be maintained in clean and good working order at all times and be made available for use by the Engineer.

The laboratory shall be equipped with a suitable heating system capable of maintaining a minimum temperature of 65°F. It shall be clean and free of all materials and equipment not associated with the laboratory. Windows shall be installed to provide sufficient light and ventilation. During summer months adequate cooling or ventilation must be provided so the indoor air temperature shall not exceed the ambient outdoor temperature. Light fixtures and outlets shall be installed at convenient locations, and a telephone shall be within audible range of the testing area. The laboratory shall be equipped with an adequate workbench that has a suitable length, width, and sampling tables, and be approved by the Engineer.

The field laboratory testing apparatus, supplies, and safety equipment shall be capable of performing all tests in their entirety that are referenced in AASHTO R 35(M), *Standard Practice for Superpave Volumetric Design for Hot-Mix Asphalt (HMA)* and AASHTO M 323, *Standard Specification for Superpave Volumetric Mix Design*. In addition, the quantity of all equipment and supplies necessary to perform the tests must be sufficient to initiate and complete the number of tests identified in Table M.04.03-2 for the quantity of mixture produced at the facility on a daily basis. The Contractor shall ensure that the

Field Code Changed

Laboratory is adequately supplied at all times during the course of the project with all necessary testing materials and equipment.

The Contractor shall maintain a list of laboratory equipment used in the acceptance testing processes including but not limited to, balances, scales, manometer/vacuum gauge, thermometers, gyratory compactor, clearly showing calibration and/or inspection dates, in accordance with AASHTO R-18.The Contractor shall notify the Engineer if any modifications are made to the equipment within the field laboratory. The Contractor shall take immediate action to replace, repair, and/or recalibrate any piece of equipment that is out of calibration, malfunctioning, or not in operation.

M.04.02—Mix Design and Job Mix Formula (JMF)

1. Marshall Method - Class 1, 2, 3, 4, 5, 5A, 5B and 12:

a. Requirements: When specified, the Marshall method shall be employed to develop a bituminous concrete mix design that includes a JMF consisting of target values for gradation and bitumen content for each class of bituminous concrete designated for the project in accordance with the latest Asphalt Institute's MS-2 manual. Each class of bituminous concrete must meet the requirements as shown in Table M.04.02-1.

b. Basis of Approval: The Contractor shall submit to the Engineer a request for approval of the JMF annually in accordance with one of the methods described herein. Prior to the start of any paving operations, the JMF and production percentage of bitumen must be accepted by the Engineer, and the Contractor must demonstrate the ability to meet the accepted JMF and production percentage of bitumen for each class of mixture. Additionally, the fraction of material retained between any two consecutive sieves shall not be less than 4%.

The Engineer will test each class of mixture for compliance with the submitted JMF and Table M.04.02-1. The maximum theoretical density (Gmm) will be determined by AASHTO T 209(M). If the mixture does not meet the requirements, the JMF shall be adjusted within the ranges shown in Table M.04.02-1 until an acceptable mixture is produced. All equipment, tests and computations shall conform to the Marshall method in accordance with AASHTO T 245(M).

An accepted JMF from the previous operating season may be acceptable to the Engineer provided that there are no changes in the sources of supply for the coarse aggregate, fine aggregate, recycled material (if applicable) and the plant operation had been consistently producing acceptable mixture.

The Contractor shall not change sources of supply after a JMF has been accepted. Before a new source of supply for materials is used, a new JMF shall be submitted to the Engineer for approval.

Field Code Changed

c. Marshall Mixture (Virgin): For bituminous concrete mixtures that contain no recycled material, the limits prescribed in Table M.04.02-1 govern. The Contractor shall submit to the Engineer for approval, a JMF with the individual fractions of the aggregate expressed as percentages of the total weight of the mix and the source(s) of all materials. The JMF shall indicate two bitumen contents; the JMF target percentage and a production percentage (actual amount added to mix) of bitumen for each mix class by total weight. For surface course Class 1, a 0.45 power gradation chart shall also be submitted on which is plotted the percentage passing each sieve. The JMF shall also indicate the target temperature of completed mixture as it is dumped from the mixer and tested in accordance with Article M.04.03.

d. Marshall Mixtures with RAP: In addition to subarticles M.04.02 – 1a through c, RAP in bituminous concrete shall comply with requirements stated in Article M.04.01, and as stated herein. Upon approval of the Engineer, a maximum of 15% RAP may be used with no binder grade modification. RAP material shall not be used with any other recycling option.
The Contractor may increase the RAP percentage in 5% increments up to a maximum of 30% provided a new JMF is accepted by the Engineer. The following information shall be included in the JMF submittal:
- Gradation and asphalt content of the RAP.
- Percentage of RAP to be used.
- Virgin aggregate source(s).
- Total binder content based on total mixture weight.
- Production pull percentage of added virgin binder based on total mixture weight.
- Gradation of combined bituminous concrete mixture (including RAP).
- Grade of virgin added, if greater than 15% of total mix weight.

e. Marshall Mixture with CRCG: In addition to subarticle M.04.02 – 1a through c, for bituminous concrete that contains CRCG, the Contractor shall submit a materials certificate to the Engineer stating that the mixture and its components comply with requirements stated in subarticle M.04.01 - (6). Additionally, 1% hydrated lime, or other accepted non-stripping agent, shall be added to all mixtures containing CRCG. CRCG material shall not be used with any other recycling option.

2. Cold Patch Method - Class 5, 5A, 5B:

a. Requirements: This mixture must be capable of being stockpiled and workable at all times. A non-stripping agent accepted by the Engineer shall be used in accordance with manufacturer's recommendations. The Contractor shall take necessary steps to ensure that this mixture uses aggregate containing no more than 1% moisture and is not exposed to any rain, snow, or standing water for a period of 6 hours after being mixed. This mixture shall be mixed and stockpiled at the point of production on a paved surface at a height not greater than 4 feet during the first 48 hours prior to its use.

Field Code Changed

i. Class 5A mixture shall have 3/8 to ½ inch polypropylene fibers that have been approved by the Engineer added at a rate of 6 pounds per ton of mixture.
ii. Class 5B mixture shall have ¼ inch polyester fibers that have been approved by the Engineer added at the rate of 2 1/2 pounds per ton of mixture.
iii. Class 5 mixture shall not contain fibers.

b. Basis of Approval: The aggregates, fibers and binder (MC-250) shall meet the requirements as specified in sub articles M.04.01-1 through 4 and in Table M.04.02-1. The use of recycled material is not permitted with these classes of bituminous concrete. Mixtures not conforming to the binder content as shown in Table M.04.02-1 shall be subject to rejection. There is a two test minimum per day of production. Mixtures not conforming to the gradation as shown in Table M.04.02-1 shall be subject to payment adjustment as specified in Section 4.06.

Field Code Changed

TABLE M.04.02 – 1 MASTER RANGES FOR MARSHALL BITUMINOUS-CONCRETE MIXTURES

Notes: (a) 75 blow (Marshall Criteria). (b) 3-6% when used for a roadway wearing surface. (c) For divided highways with 4 or more lanes, a stability of 1500 lbs is required. (d) Contains an accepted non-stripping compound. (e) To help prevent stripping, the mixed material will be stockpiled on a paved surface and at a height not greater than 4 feet during the first 48 hours. (f) As determined by AASHTO T 245(M). (g) The percent passing the #200 sieve shall not exceed the percentage of bituminous asphalt binder determined by AASHTO T 164 or AASHTO T 308(M). (h) Mixture with 5% or more aggregate retained on ¾" sieve. (i) Mixtures finer than condition (h) above. (j) Class 5 mixture shall contain no fibers. Class 5A mixture shall have 3/8 to ½ inch polypropylene fibers that have been previously accepted by the Engineer added at a minimum rate of 6 pounds per ton of mixture. Class 5B mixture shall have ¼ inch polyester fibers that have been previously accepted by the Engineer added at the minimum rate of 2 1/2 pounds per ton of mixture

CLASS	1	2	3	4	12	5 (e)(j)	5A (e)(j)	5B (e)(j)	JMF % Tol. (±)
Grade of PG Binder content %	PG 64-22 5.0 – 6.5	PG 64-22 5.0 – 8.0	PG 64-22 6.5 - 9.0	PG 64-22 4.0 - 6.0	PG 64-22 7.5 - 10.0	MC-250 (d) 6.0 - 7.5	MC-250 (d) 6.0 - 7.5	MC-250 (d) 6.0 - 7.5	0.4
Sieve Size	Percent Passing (%)								
# 200	3.0 – 8.0 (g)	3.0 – 8.0 (g)	3.0 – 8.0 (g)	0.0 – 5.0 (g)	3.0 – 10.0 (g)	0.0 - 2.5	0 .0- 2.5	0.0 - 2.5	2.0
# 50	6 – 26	8 – 26	10 - 30	5 - 18	10 - 40				4
# 30	10 - 32	16 - 36	20 - 40		20 - 60	2 - 15	2 – 15	2 - 15	5
# 8	28 - 50	40 - 64	40 - 70	20 - 40	60 - 95	10 - 45	10 – 45	10 - 45	6
# 4	40 - 65	55 - 80	65 - 87	30 - 55	80 - 95	40 - 100	40 – 100	40 - 100	7
¼"									
3/8 "	60 - 82	90 - 100	95 - 100	42 - 66	98 - 100	100	100	100	8
½ "	70 - 100	100	100		100				8
¾"	90 - 100			60 - 80					8
1"	100								
2"				100					
Additionally, the fraction of material retained between any two consecutive sieves shall not be less than 4%									
Mixture Temperature									
Binder	325°F maximum					140-185° F			
Aggregate	280-350° F					100-175° F			
Mixtures	**265-325° F**				**275-325°F**	**120-175° F**			**25 °F**
Mixture Properties									
VOIDS - %	3.0 – 6.0 (a)	2.0 – 5.0 (b)	0 – 4.0		0 - 5.0 (a)				
Stability (f) lbs. min.	1200 (c)	1000	1000		1000				
FLOW (f) in.	.08 - .15	.08 - .15	.08 - .18		.08 - .15				
VMA % - min.	15(h) :16 (i)								

Field Code Changed

GENERAL

3. Superpave Design Method – S0.25, S0.375, S0.5, and S1

a. Requirements: The Contractor or its representative shall design and submit Superpave mix designs annually for approval. The design laboratory developing the mixes shall be approved by the Engineer. The mix design shall be based on the specified Equivalent Single-Axle Loads (ESAL). Each bituminous concrete mix type must meet the requirements shown in Tables M.04.02-2 thru Table M.04.02-5 and in accordance with AASHTO M 323(M) and AASHTO R 35(M). The mix design shall include the nominal maximum aggregate size and a JMF consisting of target values for gradation and bitumen content for each bituminous concrete mix type designated for the project.

The contractor shall provide test results with supporting documentation from an AASHTO Materials Reference Laboratory (AMRL) with the use of NETTCP Certified Technicians for the following tests;

1. Aggregate consensus properties for each type & level, as specified in Table M.04.02-3. In addition the Gsa, Gsb, Pw_a shall also be provided for each component aggregate.

2. New mixes shall be tested in accordance with AASHTO T 283(M) *Standard Method of Test for Resistance of Compacted Hot-Mix Asphalt (HMA) to Moisture-Induced Damage*, (TSR). The compacted specimens may be fabricated at a bituminous concrete facility and then tested at an AMRL accredited facility.

   The AASHTO T 283(M) test results, specimens, and corresponding JMF sheet (Form MAT-429s) shall be submitted by the Contractor for review.

The Contractor shall supply the Engineer with 1 gallon of the specified PG binder and 1 gallon of the same PG binder with the warm mix additive blended into it. The MSDS for the WMA additive shall be included with every submittal.

In addition, minimum binder content values apply to all types of bituminous concrete mixtures, as stated in Table M.04.02-5. For mixtures containing RAP, the virgin production and the anticipated proportion of binder contributed by the RAP cannot be less than the total permitted binder content value for that type nor the JMF minimum binder content.

i. Superpave Mixture (virgin): For bituminous concrete mixtures that contain no recycled material, the limits prescribed in Tables M.04.02-2 thru Table M.04.02-5 apply. The Contractor shall submit a JMF, on a form provided by the Engineer, with the individual fractions of the aggregate expressed as percentages of the total weight of the mix and the source(s) of all materials to the Engineer for approval. The JMF shall indicate the corrected target binder content and applicable binder correction factor (ignition oven or extractor) for each mix type by total weight of mix. The mineral filler (dust) shall be defined as that portion of blended mix that

Field Code Changed

passes the #200 sieve by weight when tested in accordance with AASHTO T 30(M). The dust-to-effective asphalt (D/Pbe) ratio shall be between 0.6 and 1.2 by weight. The dry/wet mix times and hot bin proportions (batch plants only) for each type shall be included in the JMF.

The percentage of aggregate passing each sieve shall be plotted on a 0.45 power gradation chart and shall be submitted for all bituminous concrete mixtures. This chart shall delineate the percentage of material passing each test sieve size as defined by the JMF. The percentage of aggregate passing each standard sieve shall fall within the specified control points, but outside the restricted zone limits as shown in Tables M.04.02-2 thru Table M.04.02-5. Mixes with documented performance history which pass through the restricted zone may be permitted for use as long as all other physical and volumetric criteria meets specifications as specified in Tables M.04.02-2 thru Table M.04.02-5 and with prior approval from the Engineer. A change in the JMF requires that a new chart be submitted.

ii. Superpave Mixtures with RAP: Use of approved RAP may be allowed with the following conditions:

- RAP amounts up to 15% may be used with no binder grade modification.
- RAP amounts up to 20% may be used provided a new JMF is approved by the Engineer. The JMF submittal shall include the grade of virgin binder added and test results that show the combined binder (recovered binder from the RAP, virgin binder at the mix design proportions and warm mix asphalt additive if used) meets the requirements of the specified binder grade.

Unless approved by the Engineer, RAP material shall not be used with any other recycling option.

b. Basis of Approval: On an annual basis, the Contractor shall submit to the Engineer any bituminous concrete mix design, and JMF anticipated for use on Department projects. Prior to the start of any paving operations, the mix design and JMF must be approved by the Engineer. Bituminous concrete mixture supplied to the project without an approved mix design and JMF will be rejected. The following information must be included in the mix design submittal:

a. Gradation, specific gravities and asphalt content of the RAP,
b. Source of RAP and percentage to be used.
c. Warm mix Technology and manufacturer's recommended additive rate and tolerances, mixing and compaction temperature ranges for the mix with and without the warm-mix technology incorporated.
d. Result of TSR testing, and if applicable Anti-strip manufacturer, and dosage rate.
e. Target Temperature at plant discharge.

Field Code Changed

Note – Testing to be performed shall be done in accordance with section M.04.03.

The JMF shall be accepted if the Plant mixture and materials meet all criteria as specified in Tables M.04.02-2 thru Table M.04.02-5. If the mixture does not meet the requirements, the contractor shall adjust the JMF within the ranges shown in Tables M.04.02-2 thru Table M.04.02-5 until an acceptable mixture is produced. All equipment, tests, and computations shall conform to the latest AASHTO R-35(M) and AASHTO M-323(M).

Any JMF, once approved, shall only be acceptable for use when it is produced by the designated plant, it utilizes the same component aggregates and binder source, and it continues to meet all criteria as specified herein, and component aggregates are maintained within the tolerances shown in Table M.04.02-2.

The Contractor shall not change any component source of supply including consensus properties after a JMF has been accepted. Before a new source of materials is used, a revised JMF shall be submitted to the Engineer for approval. Any approved JMF applies only to the plant for which it was submitted. Only one mix with one JMF will be approved for production at any one time. Switching between approved JMF mixes with different component percentages or sources of supply is prohibited.

Superpave mixture with CRCG: In addition to subarticles M.04.02 – 3 a through c, for bituminous concrete mixtures that contain CRCG, the Contractor shall submit a materials certificate to the Engineer stating that the CRCG complies with requirements stated in Article M.04.01, as applicable. Additionally, 1% hydrated lime, or other accepted non-stripping agent, shall be added to all mixtures containing CRCG. CRCG material shall not be used with any other recycling option.

c. Mix Status: Each facility will have each type of bituminous concrete mixture evaluated based on the previous year of production, for the next construction paving season, as determined by the Engineer. Based on the rating a type of mixture receives it will determine whether the mixture can be produced without the completion of a PPT. Ratings will be provided to each bituminous concrete producer annually prior to the beginning of the paving season.

The rating criteria are based on compliance with Air Voids and Voids in Mineral Aggregate (VMA) as indicated in Table M.04.03-3: *Superpave Master Range for Bituminous Concrete Mixture Production*, and are as follows:

Criteria A: Based on Air Voids. Percentage of acceptance results with passing air voids.

Criteria B: Based on Air Voids and VMA. The percentage of acceptance results with passing VMA, and the percentage of acceptance results with passing air voids, will be averaged.

Field Code Changed

The final rating assigned will be the lower of the rating obtained with Criteria A or Criteria B.

Ratings are defined as:

"A" – Approved:
A rating of "A" is assigned to each mixture type from a production facility with a current rating of 70% passing or greater.

"PPT" – Pre-Production Trial:
Rating assigned to each mixture type from a production facility when:

1. there are no passing acceptance production results submitted to the Department from the previous year;
2. there is a source change in one or more aggregate components from the JMF on record by more than 10% by weight;
3. there is a change in RAP percentage ,
4. the mixture has a rating of less than 70% from the previous season;
5. a new JMF not previously submitted.

Bituminous concrete mixtures rated with a "PPT" cannot be shipped or used on Department projects. A passing "PPT" test shall be performed with NETTCP certified personnel on that type of mixture by the bituminous concrete producer and meet all specifications (Table M.04.02-2 Table M.04.02-5) before production shipment may be resumed.
Contractors that have mix types rated a "PPT" may use one of the following methods to change the rating to an "A."

Option A: Schedule a day when a Department inspector can be at the facility to witness a passing "PPT" test or,

Option B: When the Contractor or their representative performs a "PPT" test without being witnessed by an inspector, the Contractor shall submit the test results and a split sample including 2 gyratory molds, 5,000 grams of boxed bituminous concrete for binder and gradation determination, and 5,000 grams of cooled loose bituminous concrete for Gmm determination for verification testing and approval. Passing verifications will designate the bituminous concrete type to be on an "A" status. Failing verifications will require the contractor to submit additional trials.

Option C: When the Contractor or their representative performs a "PPT" test without being witnessed by a Department inspector, the Engineer may verify the mix in the Contractor's laboratory. Passing verifications will designate the bituminous concrete type to be an "A" status. Failing verifications will require the Contractor to submit additional trials.

Field Code Changed

When Option (A) is used and the "PPT" test meets all specifications, the "PPT" test is considered a passing test and the rating for that mix is changed to "A". When the "PPT" test is not witnessed, the "PPT" Option (B) or (C) procedure must be followed. If the "PPT" Option (B) procedure is followed, the mixtures along with the test results must be delivered to the Materials Testing Lab. The test results must meet the "C" tolerances established by the Engineer. The tolerance Table is included in the Department's current QA Program for Materials, Acceptance and Assurance Testing Policies and Procedures.

"U" – No Acceptable Mix Design on File:

Rating assigned to a type of mixture that does not have a JMF submitted, or the JMF submitted has not been approved, or is incomplete. A mix design or JMF must be submitted annually seven (7) days prior in order to obtain an "A," or "PPT" status for that mix. A "U" will be used only to designate the mix status until the mix design has been approved, and is accompanied with all supporting data as specified. Bituminous concrete mixtures rated with a "U" cannot be used on Department projects.

Field Code Changed

TABLE M.04.02– 2: SUPERPAVE MASTER RANGE FOR BITUMINOUS CONCRETE MIXTURE DESIGN CRITERIA

Notes: (1) Minimum Pb as specified in Table M.04.02-5. (2) Voids in Mineral Aggregates shall be computed as specified herein. (3) Control point range is also defined as the master range for that mix. (4) Dust is considered to be the percent of materials passing the #200 sieve. (5) For WMA, lower minimum aggregate temperature will require Engineer's approval. (6) For WMA and PMA, the mix temperature shall meet manufacturer's recommendations.

	S0.25				**S0.375**				**S0.5**				**S1**			
Sieve	CONTROL POINTS (3)		*RESTRICTED ZONE*		CONTROL POINTS(3)		*RESTRICTED ZONE*		CONTROL POINTS(3)		*RESTRICTED ZONE*		CONTROL POINTS(3)		*RESTRICTED ZONE*	
inches	Min (%)	Max (%)	*Max (%)*	*Min (%)*	Min (%)	Max (%)	*Min (%)*	*Max (%)*	Min (%)	Max (%)	*Min (%)*	*Max (%)*	Min (%)	Max (%)	*Min (%)*	*Max (%)*
2.0	-	-	-	-	-	-	-	-	-	-	-	-	-	-	-	-
1.5	-	-	-	-	-	-	-	-	-	-	-	-	100	-	-	-
1.0	-	-	-	-	-	-	-	-	-	-	-	-	90	100	-	-
3/4	-	-	-	-	-	-	-	-	100	-	-	-	-	90	-	-
1/2	100	-	-	-	100	-	-	-	90	100	-	-	-	-	-	-
3/8	97	100	-	-	90	100	-	-	-	90	-	-	-	-	-	-
#4	-	90	-	-	-	90	-	-	-	-	-	-	-	-	*39.5*	*39.5*
#8	32	67	*47.2*	*47.2*	32	67	*47.2*	*47.2*	28	58	*39.1*	*39.1*	19	45	*26.8*	*30.8*
#16	-	-	*31.6*	*37.6*	-	-	*31.6*	*37.6*	-	-	*25.6*	*31.6*	-	-	*18.1*	*24.1*
#30	-	-	*23.5*	*27.5*	-	-	*23.5*	*27.5*	-	-	*19.1*	*23.1*	-	-	*13.6*	*17.6*
#50	-	-	*18.7*	*18.7*	-	-	*18.7*	*18.7*	-	-	*15.5*	*15.5*	-	-	*11.4*	*11.4*
#100	-	-	-	-	-	-	-	-	-	-	-	-	-	-	-	-
#200	2.0	10.0	-	-	2.0	10.0	-	-	2.0	10.0	-	-	1.0	7.0	-	-
Pb (1)	-	-	-	-	-	-	-	-	-	-	-	-	-	-	-	-
VMA (2) (%)	16.0 ± 1				16.0 ± 1				15.0 ± 1				13.0 ± 1			
VA (%)	4.0 ± 1				4.0 ± 1				4.0 ± 1				4.0 ± 1			
Gse	JMF value				JMF value				JMF value				JMF value			
Gmm	JMF ± 0.030				JMF ± 0.030				JMF ± 0.030				JMF ± 0.030			
Dust/Pbe(4)	0.6 – 1.2				0.6 – 1.2				0.6 – 1.2				0.6 – 1.2			
Agg. Temp(5)	280 – 350F				280 – 350F				280 – 350F				280 – 350F			
Mix Temp(6)	265 – 325 F				265 – 325 F				265 – 325 F				265 – 325 F			
Design TSR	≥ 80%				≥ 80%				≥ 80%				≥ 80%			
T-283 Stripping	Minimal, as determined by the Engineer															

Field Code Changed

TABLE M.04.02–3

SUPERPAVE MASTER RANGE FOR CONSENSUS PROPERTIES OF COMBINED AGGREGATE STRUCTURES

Notes: (1) If less than 25 % of a given layer is within 4 inches of the anticipated top surface, the layer may be considered to be below 4 inches for mixture design purposes.

Traffic Level	Design ESALs (80 kN)	Coarse Aggregate Angularity (1) ASTM D 5821	Fine Aggregate Angularity (7) AASHTO T 304	Flat or Elongated Particles ASTM D 4791	Sand Equivalent AASHTO T 176
-----	(million)			>#4	-----
1*	< 0.3	55/- -	40	10	40
2	0.3 to < 3.0	75/- -	40	10	40
3	≥ 3.0	95/90	45	10	45
	Design ESALs are the anticipated project traffic level expected on the design lane, projected over a 20 year period, regardless of the actual expected design life of the roadway.	Criteria presented as minimum values. 95/90 denotes that a minimum of 95% of the coarse aggregate, by mass, shall have one fractured face and that a minimum of 90% shall have two fractured faces.	Criteria presented as minimum percent air voids in loosely compacted fine aggregate passing the #8 sieve.	Criteria presented as maximum Percent by mass of flat or elongated particles of materials retained on the #4 sieve, determined at 3:1 ratio.	Criteria presented as minimum values for fine aggregate passing the #8 sieve.

*** NOTE: Level 1 for use by Towns and Municipalities ONLY.**

TABLE M.04.02– 4: SUPERPAVE MASTER RANGE FOR TRAFFIC LEVELS AND DESIGN VOLUMETRIC PROPERTIES.

Traffic Level	Design ESALs	Number of Gyrations by Superpave Gyratory Compactor			Percent Density of Gmm from HMA/WMA specimen			Voids Filled with Asphalt (VFA) Based on Nominal mix size – inch			
	(million)	Nini	Ndes	Nmax	Nini	Ndes	Nmax	0.25	0.375	0.5	1
1*	< 0.3	6	50	75	≤ 91.5	96.0	≤ 98.0	70 - 80	70 - 80	70 - 80	67 - 80
2	0.3 to < 3.0	7	75	115	≤ 90.5	96.0	≤ 98.0	65 - 78	65 - 78	65 - 78	65 - 78
3	≥ 3.0	8	100	160	≤ 90.0	96.0	≤ 98.0	73 – 76	73 - 76	65 - 75	65 - 75

*** NOTE: Level 1 for use by Towns and Municipalities ONLY.**

Field Code Changed

TABLE M.04.02– 5: SUPERPAVE MINIMUM BINDER CONTENT BY MIX TYPE & LEVEL.

Mix Type	Level	Binder Content Minimum (1)
S0.25	1*	5.6
S0.25	2	5.5
S0.25	3	5.4
S0.375	1*	5.6
S0.375	2	5.5
S0.375	3	5.4
S0.5	1*	5.0
S0.5	2	4.9
S0.5	3	4.8
S1	1*	4.6
S1	2	4.5
S1	3	4.4

*** NOTE: Level 1 for use by Towns and Municipalities ONLY.**

M.04.03— Production Requirements:

1. Quality Control Plan and Processes: The Contractor shall submit a Quality Control Plan (QCP) for bituminous concrete production specifically for the plant producing the bituminous concrete mixture for review and approval of the Engineer on an annual basis.

The QCP shall describe the organization and procedures which the Contractor shall use to administer quality control. The QCP shall include the procedures used to control the production process, to determine when immediate changes to the processes are needed, and to implement the required changes. The QCP must detail the inspection, sampling and testing protocols to be used, and the frequency for each.

Field Code Changed

Control Chart(s) shall be developed and maintained for critical aspect(s) of the production process as determined by the Contractor. The control chart(s) shall identify the material property, applicable upper and lower control limits, and be updated with current test data. The control chart(s) shall be used as part of the quality control system to document variability of the bituminous concrete production process. The control chart(s) shall be submitted to the Engineer upon request.

The QCP shall also include the name and qualifications of a Quality Control Manager. The Quality Control Manager shall be responsible for the administration of the QCP, including compliance with the plan and any plan modifications. All daily QC sampling, inspection and test reports shall be reviewed by the Quality Control Manager and be submitted to the Engineer upon request.

The QCP shall also include the name and qualifications of any outside testing laboratory performing any QC functions on behalf of the Contractor. The QCP must also include a list of sampling & testing methods and frequencies used during production, and the names of all Quality Control personnel and their duties.

Approval of the QCP does not imply any warranty by the Engineer that adherence to the plan will result in production of bituminous concrete that complies with these specifications. The Contractor shall submit any changes to the QCP as work progresses.

2. **Acceptance Sampling & Testing Methods:** Acceptance samples of mixtures shall be obtained from the hauling vehicles and tested by the Contractor at the facility during each day's production.

The hauling vehicle from which samples are obtained shall be selected using stratified – random sampling based on the total estimated tons of production in accordance with ASTM D 3665, except that the first test shall be randomly taken from the first 151 tons or as directed by the Engineer.

The number of sub lots and tests required per sub lot is based on the total estimated tons of production per day as indicated in Table M.04.03-1. Quantities of the same type/level mix per plant may be combined daily for multiple state projects to determine the number of sub lots.
The payment adjustment for air voids and liquid binder will be calculated per sub lot as described in Section 4.06.

Field Code Changed

An acceptance test shall not be performed within 150 tons of production from a previous acceptance test unless approved by the Engineer. Quality Control tests are not subject to this restriction. Unless otherwise tested, a minimum of one (1) acceptance test shall be performed for every four days of production at a facility for each type/level mix (days of production may or may not be consecutive days).

The Contractor shall submit all acceptance tests results to the Engineer within 24 hours or prior to the next day's production. All acceptance test specimens and supporting documentation must be retained by the Contractor. Verification testing will be performed by the Engineer on the retained specimens in accordance with the Department's QA Program for Materials.

Should the Department be unable to verify the Contractor's acceptance test result(s) due to a failure of the Contractor to retain acceptance test specimens or supporting documentation, the Contractor shall review its quality control plan, determine the cause of the nonconformance and respond in writing within 24 hours to the Engineer describing the corrective action taken at the plant. In addition the Contractor must provide supporting documentation or test results to validate the subject acceptance test result(s). The Engineer may invalidate any positive adjustments for material corresponding to the acceptance test(s). Failure of the Contractor to adequately address quality control issues at a facility may result in suspension of production for Department projects at that facility.

Contractor personnel performing acceptance sampling and testing must be present at the facility prior to, and during production, and be certified as a NETTCP HMA Plant Technician or Interim HMA Plant Technician and be in good standing. Production of material for use on State projects must be suspended by the Contractor if such personnel are not present.

Technicians found by the Engineer to be non-compliant with NETTCP or Department policies may be removed by the Engineer from participating in the acceptance testing process for Department projects until their actions can be reviewed.

Anytime during production that testing equipment becomes inoperable, production can continue for a maximum of 1 hour. The Contractor shall obtain box sample(s) in accordance with Table M.04.03-1 to satisfy the daily acceptance testing requirement for the quantity shipped to the project. The box sample(s) shall be tested once the equipment issue has been resolved to the satisfaction of the Engineer. Production beyond 1 hour may be considered by the Engineer. Production will not be permitted beyond that day until the subject equipment issue has been resolved.

Field Code Changed

Table M.04.03 – 1: Acceptance Testing Frequency per Type/Level/Plant

Daily quantity produced in tons (lot)	Number of Sub Lots/Tests
0 to 150	0, Unless requested by the Engineer
151 to 600	1
601 to 1,200	2
1,201 to 1,800	3
1,801 or greater	1 per 600 tons or portions thereof

Field Code Changed

i. Marshall Mix Acceptance Sampling and Testing Procedures: When the Marshall mix design is specified, the following acceptance procedures and AASHTO test methods shall be used:

Table M.04.03 – 2: Marshall Acceptance Test Procedures

Protocol	Reference	Description
1	**AASHTO T 30(M)**	Mechanical Analysis of Extracted Aggregate
2	**AASHTO T 40(M)**	Sampling Bituminous Materials
3	**AASHTO T 308(M)**	Binder content by Ignition Oven method (adjusted for aggregate correction factor)
4	**AASHTO T 245(M)**	Resistance to Plastic Flow of Bituminous Mixtures Using Marshall Apparatus
5	**AASHTO T 209(M)**	Theoretical Maximum Specific Gravity and Density of Bituminous Paving Mixtures
6	**AASHTO T 269(M)**	Percent Air Voids in Compacted Dense and Open Bituminous Paving Mixtures
7	**AASHTO T 329**	Moisture Content of Hot-Mix Asphalt (HMA) by Oven Method

a. Cessation of Supply: Marshall Mix Production shall cease for the Project from any facility that consistently fails to produce mixture that meets the JMF and volumetric properties. The criteria for ceasing the supply of a class of mixture from any plant are as follows:

i. Off-Test Status: The results of AASHTO T 164 or AASHTO T 308(M) and T 30(M) will be used to determine if the mixture is within the tolerances shown in Table M.04.02-1. The Contractor will be notified that a plant is "off test" for a class of mixture when the test results indicate that any single value for bitumen content or gradation are not within the tolerances shown in Table M.04.02-1 for that class of mixture.

ii. When multiple plants and silos are located at one site, mixture supplied to one project is considered as coming from one source for the purpose of applying the “off test” adjusted payment.

iii. If a test indicates that the bitumen content or gradation are outside the tolerances, the Contractor may make a single JMF change on classes 1, 2, 3, 4 and 12 as allowed by the Engineer prior to any additional testing. A JMF change shall

Field Code Changed

include the date and name of the Engineer that allowed it. Consecutive test results outside the requirements of Table M.04.02-1 JMF tolerances may result in rejection of the mixture.

iv. The Engineer may cease supply of mixture from the plant when the test results from three non-consecutive samples of a class of mixture are not within the JMF tolerances or the test results from two non-consecutive samples not within the master range indicated in Table M.04.02-1 during any one production period, due to inconsistent production.

v. Any modification to the JMF shall not exceed 50% of the JMF tolerances indicated in Table M.04.02-1 for any given component of the mixture without approval of the Engineer. When such an adjustment is made to the bitumen, the corresponding production percentage of bitumen shall be revised accordingly.

b. Adjustments for Off Test Mixture under Cessation of Supply: The bituminous concrete plant shall cease supplying to the project:

i. When the test results from three consecutive samples are "off test" and not within the JMF tolerances or,

ii. The test results from two consecutive samples are "off test" and not within the ranges indicated in Table M.04.02 – 1 or,

iii. When the percent of material passing the minus #200 sieve material exceeds the percent of extracted bitumen content for three consecutive samples during any production period of the values stated in Table M.04.02-1:

a. The quantity of mixtures shipped to the project determined to be "off test" and outside the tolerances will be tabulated by the Engineer and will be adjusted in accordance with Section 4.06.

b. Following cessation, a trial production period will be required at the plant for that class of mixture. Use of that class of mixture from that plant will be prohibited on the Project until the plant has demonstrated the ability to consistently produce acceptable mixture.

c. When the Engineer has accepted the mixtures from the trial production period, the use of that mixture on the Project may resume.

Field Code Changed

ii. Superpave Mix Acceptance Sampling and Testing Procedures: When the Superpave mix design is specified, the following acceptance and AASHTO test procedures shall be used:

Table M.04.03– 3: Superpave Acceptance Testing Procedures

Protocol	Reference	Description
1	AASHTO T 168(M)	Sampling of bituminous concrete
2	AASHTO T 308(M)	Binder content by Ignition Oven method (adjusted for aggregate correction factor)
3	AASHTO T 30(M)	Gradation of extracted aggregate for bituminous concrete mixture
4	AASHTO T 312(M)	(1)Superpave Gyratory molds compacted to N_{des}
5	AASHTO T 166(M)	(2)Bulk specific gravity of bituminous concrete
6	AASHTO R 35(M)	(2)Air voids, VMA
7	AASHTO T 209(M)	Maximum specific gravity of bituminous concrete (average of two tests)
8	AASHTO T 329	Moisture content of Production bituminous concrete

The Contractor shall perform moisture susceptibility (TSR) testing annually for all design levels of HMA-, WMA-, and PMA- S0.5 plant-produced mixtures, in accordance with the latest version of AASHTO T 283(M).

If any material source changes from the previous year, or during the production season, a mix design TSR as well as a production TSR is required for the new mixture. The AASHTO T 283(M) test shall be performed at an AASHTO Materials Reference Laboratory (AMRL) by NETTCP Certified Technicians. The test results and specimens shall be submitted to the Engineer for review. This shall be completed within 30 days from the start of production. Superpave mixtures that require anti-strip additives (either liquid or mineral) shall continue to meet all requirements specified herein for binder and bituminous concrete. The Contractor shall submit the name, manufacturer, percent used, and MSDS sheet for the anti-strip additive (if applicable) to the Engineer. In addition, compaction of samples shall be accomplished utilizing an accepted

Field Code Changed

Superpave Gyratory Compactor (SGC), supplied by the Contractor. The SGC shall be located at the facility supplying mixture to the project.

a. Determination of Off-Test Status:

i. Off Test Status: Superpave mixes shall be considered *"off test"* when any Control Point Sieve, VA, VMA, and Gmm values are outside of the limits specified in Table M.04.03-3 and the computed binder content (Pb) established by AASHTO T308(M) or as documented on the vehicle delivery ticket is below the minimum binder content stated in sub article M.04.03-5. Note that further testing of samples or portions of samples not initially tested for this purpose cannot be used to change the status.

ii. Any time the bituminous concrete mixture is considered Off-test:

1. The Contractor shall notify the Engineer (and project staff) when the plant is *"off test"* for a type of mixture. When multiple plants and silos are located at one site, mixture supplied to one project is considered as coming from one source for the purpose of applying the *"off test"* determination.

2. The Contractor must take immediate actions to correct the deficiency, minimize *"off test"* production to the project, and obtain an additional Process Control (PC) test after any corrective action to verify production is in conformance to the specifications. A PC test will not be used for acceptance and is solely for the use of the Contractor in its quality control process.

b. Cessation of Supply for Superpave Mixtures with no Payment Adjustment: Production of bituminous concrete shall cease for the Project from any plant that consistently fails to produce mixture that meets the JMF and volumetric properties. The quantity of Superpave mixtures shipped to the project that is "off-test" will not be adjusted for deficient mixtures.

A Contractor shall cease to supply mixture from a plant when:

1. Bituminous concrete mixture is "off test" on three (3) consecutive tests for VMA or Gmm, regardless of date of production due to inconsistency (i.e., small production requires 1 test per day for multiple days).

Field Code Changed

2. Bituminous concrete mixture is "off test" on two (2) consecutive tests for the Control Point sieves in one day's production.

Following cessation, the Contractor shall immediately make necessary material or process corrections and run a Pre-Production Trial (PPT) for that type of mixture. Use of that type of mixture from that plant will be prohibited on the Project until the Contractor has demonstrated the ability to produce acceptable mixture from that facility. When the Contractor has a passing test and has received approval from the Engineer, the use of that mixture to the Project may resume.

c. Cessation of Supply for Superpave Mixtures with Payment Adjustment:
Production of bituminous concrete shall cease for the Project from any plant that consistently fails to produce mixture that meets the Superpave minimum binder content by mix type and level listed in Table M.04.02-5. The quantity of Superpave mixtures shipped to the project that is "off-test" will be adjusted for deficient mixtures in accordance with Section 4.06.

A Contractor shall cease to supply mixture from a plant when the binder content (Pb) is below the requirements of Table M.04.03-5 on the ignition oven test result after two (2) consecutive tests, regardless of the date of production.

Following cessation, the Contractor shall immediately make necessary material or process corrections and run a Pre-Production Trial (PPT) for that type of mixture. Use of that type of mixture from that plant will be prohibited on the Project until the Contractor has demonstrated the ability to produce acceptable mixture from that facility. When the Contractor has a passing test and has received approval from the Engineer, the use of that mixture to the Project may resume.

d. JMF Changes for Superpave Mixture Production: It is understood that a JMF change is effective from the time it was submitted forward and is not retroactive to the previous test or tests. JMF changes are permitted to allow for trends in aggregate and mix properties but every effort shall be employed by the Contractor to minimize this to ensure a uniform and dense pavement.

JMF changes to the G_{mm} or mix Absorption Correction Factor (A_{cf}) are only permitted prior to or after a production shift for all bituminous-concrete types of mixtures and only when they:

Field Code Changed

i. Are requested in writing and pre-approved by the Engineer;
ii. Are based on a minimum of a two test trend;
iii. Are documented with a promptly submitted revised JMF on form provided by the Engineer.
iv. A revised JMF submittal shall include the date and name of the Engineer that allowed it.

Field Code Changed

TABLE M.04.03– 3: SUPERPAVE MASTER RANGE FOR BITUMINOUS CONCRETE MIXTURE PRODUCTION

Notes: (1) 300°F minimum after October 15. (2) Minimum Pb as specified in Table M.04.03-5 (3) Control point range is also defined as the master range for that mix. (4) JMF tolerances shall be defined as the limits for production compliance. VA & Pb payment is subject to adjustments, as defined in sub-article 4.06.04 - 2. (5) For WMA, lower minimum aggregate temperature will require Engineer's approval. (6) For WMA and/or polymer modified asphalt, the mix temperature shall meet manufacturer's recommendations. In addition, for WMA, the maximum mix temperature shall not exceed 325°F once the WMA technology is incorporated.

	S0.25		**S0.375**		**S0.5**		**S1**		**Tolerances**
Sieve	CONTROL POINTS (4)		CONTROL POINTS (4)		CONTROL POINTS (4)		CONTROL POINTS (4)		**JMF Limits** (4)
inches	Min(%)	Max(%)	Min(%)	Max(%)	Min(%)	Max(%)	Min(%)	Max(%)	±Tol
2.0	-	-	-	-	-	-	-	-	
1.5	-	-	-	-	-	-	100	-	
1.0	-	-	-	-	-	-	90	100	
3/4	-	-	-	-	100	-	-	90	
1/2	100	-	100	-	90	100	-	-	
3/8	97	100	90	100	-	90	-	-	
#4	-	90	-	90	-	-	-	-	
#8	32	67	32	67	28	58	19	45	
#16	-	-	-	-	-	-	-	-	
#200	2.0	10.0	2.0	10.0	2.0	10.0	1.0	7.0	
Pb(2)	-	-	-	-	-	-	-	-	note (2)
VMA (%)	16.0		16.0		15.0		13.0		1.0
VA (%)	4.0		4.0		4.0		4.0		1.0
Gmm	JMF value		JMF value		JMF value		JMF value		0.030
Agg. Temp (5)	280 – 350F		280 – 350F		280 – 350F		280 – 350F		
Mix Temp (6)	265 – 325 F (1)		265 – 325 F (1)		265 – 325 F (1)		265 – 325 F (1)		
Prod. TSR	N/A		N/A		≥80%		N/A		
T-283 Stripping	N/A		N/A		Minimal as determined by the Engineer		N/A		

Field Code Changed

TABLE M.04.03– 4: SUPERPAVE MASTER RANGE FOR TRAFFIC LEVELS AND DESIGN VOLUMETRIC PROPERTIES.

Traffic Level	Design ESALs (million)	Number of Gyrations by Superpave Gyratory Compactor	
		Nini	Ndes
1*	< 0.3	6	50
2	0.3 to < 3.0	7	75
3	≥3.0	8	100

*** NOTE: Level 1 for use by Towns and Municipalities ONLY.**

TABLE M.04.03– 5: SUPERPAVE MINIMUM BINDER CONTENT BY MIX TYPE & LEVEL.

Mix Type	Level	Binder Content Minimum (1)
S0.25	1*	5.6
S0.25	2	5.5
S0.25	3	5.4
S0.375	1*	5.6
S0.375	2	5.5
S0.375	3	5.4
S0.5	1*	5.0
S0.5	2	4.9
S0.5	3	4.8
S1	1*	4.6
S1	2	4.5
S1	3	4.4

*** NOTE: Level 1 for use by Towns and Municipalities ONLY.**

Field Code Changed

Table M.04.03-6:
Modifications to Standard AASHTO and ASTM Test Specifications and Procedures.

AASHTO Standard Specification	
Reference	**Modification**
M 320	1. Mass change for PG 64-22 shall be a maximum loss of 0.5% when tested in accordance with AASHTO T 240. 2. The two bottles used for the mass change determination may be re-heated and used for further testing.
AASHTO Standard Methods of Test	
Reference	**Modification**
T 27	Section 7.7 Samples are not washed
T 30	Section 6.2 thru 6.5 Samples are not routinely washed
T 168	Samples are taken at one point in the pile. All types of bituminous concrete except Class 4 are scooped from the sample container instead of remixing and quartering. (Method verified by laboratory study). Samples from a hauling vehicle are taken from only one point instead of three as specified. Selection of Samples: Sampling is equally important as the testing, and the sampler shall use every precaution to obtain samples that are truly representative of the bituminous mixture. Box Samples: In order to enhance the rate of processing samples taken in the field by construction or maintenance personnel the samples will be tested in the order received and data processed to be determine conformance to material specifications and to prioritize inspections by laboratory personnel.
T 195	Section 4.3 only one truck load of mixture is sampled. Samples are taken from opposite sides of the load.
T 209	Article 9.5.1 Bowl is suspended 2 minutes prior to reading rather than 10 minutes. This makes no significant difference in results. Section 7.2 The average of two bowls is used proportionally in order to satisfy minimum mass requirements. 8.3 Omit Pycnometer method.
T 245	Article 3.3.2 A compacting temperature of 140 to 146°C (284 to 295°F) is used Article 3.5.2 Seventy-five (75) blows per side are used on Classes 1 and 12, per ConnDOT design requirements Section 3.1 for production testing: one specimen is molded for each extraction test for production over 275 metric tons/day (300 tons/day). Other mixtures: two specimens per extraction test.
T 283	When foaming technology is used, the material used for the fabrication of the specimens shall be cooled to room temperature, and then reheated to the manufactures recommended compaction temperature prior to fabrication of the

Field Code Changed

	specimens.
T 308	In addition to the standard testing procedure, the Department has adopted a procedure that addresses a correction factor that is calculated using the composite aggregate percentages (**C**omposite **A**ggregate **C**orrection **F**actor **M**ethod **(CACF)**). The aggregate is burned in compliance with the standard AASHTO procedure Method A exclusively. All modifications are listed for this method only. A2.2 and A2.3 Omit A2.4 Omit. Replace with: Determine an aggregate gradation for each aggregate component "blank" in accordance with T30. A2.5 Omit. Replace with: The individual aggregate samples are to be dried in an oven at a maximum temperature of 148 ± 5ºC (300 ± 9º F) to a constant weight. RAP samples are to be oven dried at a maximum temperature of 110 ± 5ºC (230 ± 9º F) to a constant weight. RAP samples will be burned for total binder content only and not to arrive at a correction factor for a mixture. A2.6 and A2.7 and A2.8 Omit. A2.8.1 Omit Note 2 A2.9 Omit. Replace with: Perform a gradation analysis on the residual aggregate in accordance with T30 and compare it to the gradation performed prior to burning. A2.9.1 and A2.9.2 Omit The correction factors for each size aggregate are provided by the Contractor to the Engineer prior to the Annual Plant Inspection. The Engineer may verify the correction factors. The Composite Aggregate Correction Factor (CACF) for any mixture may be calculated by summing the result of the correction factor for each individual aggregate multiplied by the percentage of that aggregate in the overall mixture. (Note: All correction factors must be re-calculated every time the percentage of any aggregate changes within the mixture.) If the average corrected Pb content from the ignition oven differs by 0.3% or more from the average bituminous concrete facility production weigh ticket in five (5) consecutive tests regardless of the production date (moving average), the Contractor shall immediately investigate, determine an assignable cause and correct the issue. When two consecutive moving average differences are 0.3% or more, the Engineer may require a new correction factor calculation for all the aggregate components in the mix. In addition to the standard testing procedure, the Department has adopted a procedure that addresses the time involved between sampling the hot-mix asphalt specimen and the beginning of the test. 6.3 Omit. Replace with: The test specimen must be ready to be placed in an approved ignition furnace for testing within ten minutes of being obtained from the hauling vehicle and the test shall start immediately after.

Field Code Changed

T 331	6.1 Cores are dried to a constant mass prior to testing using a core-dry machine.

AASHTO Standard Recommended Practices

Reference	Modification
R 35	**<u>Volumetric Calculations of VMA and Correction Factor</u>** VMA_a - Voids in Mineral Aggregate from (Va + Vbe) the mix: A. VMA calculated from the mix shall be determined in accordance with *Formula 5.16.1A*. It can be correlated that the VMA calculated from AASHTO R-35 is equivalent to VMA_a when the Pb_a x (100-Pb_t) / 100 is known and substituted for A_{cf}, as shown in *Formula 5.16.1A (ii)*. Test results from VMA_a shall therefore be required to meet all contract specifications. Values of VMA_a that are out of specifications during production may be cause for the contractor to determine assignable reason, take corrective action, and modify the Job Mix Formula (JMF), as needed. Continued VMA_a data that is out of specifications may be cause for the Engineer to order cessation of supply. *Formula 5.16.1A.* Determining the VMA of bituminous concrete by the mix or air voids & effective binder method: $$VMA_a = V_a + \left[\frac{(Gmb_d \times (Pb_t - A_{cf})}{G_b}\right]$$ Where: VMA_a = VMA calculated from plant production mix(V_a + Vb_e) Gmb_d = Bulk specific gravity as determined by AASHTO T 166(M) Pb_t = Total Binder Content (corrected) by AASHTO T 308(M) A_{cf} = Absorption correction factor provided by Contractor (refer to B. i and ii) B. Determining the bituminous concrete mix binder correction factor for each class by use of percent absorption of water by AASHTO T 84/85, AASHTO M 323 and D_f method. This value shall be performed by the Contractor during the mix design only and submitted as a JMF value. Two methods for determining the A_{cf} are shown, although method (i) will be the desired method to be used. Both methods are equivalent when the Gsa, Gsb and Pwa are recent and valid for the mix. *i.* $A_{cf} = Df \times Pwa \times (100 - Pb_t) / 100$ *ii.* $A_{cf} = (Pb_a \text{ from annual JMF submittal}) \times (100 - Pb_t) / 100$ Where: Df = as determined by Formula 5.16.1B. Pwa = as determined by AASHTO T 84/85 Pb_a = as determined by AASHTO M 323 (from annual JMF submittal) D_f (Density Factor): The Contractor shall calculate the bituminous concrete

Formatted: Indent: Left: -0.25", Hanging: 0.53", Numbered + Level: 1 + Numbering Style: A, B, C, … + Start at: 1 + Alignment: Left + Aligned at: -0.25" + Tab after: 0.03" + Indent at: 0.03", Tab stops: 0.03", Left + Not at 0.03"

Field Code Changed

	mix design D_f (*derived from formula X1.2 APPENDIX X1 of AASHTO R 35)* for each class of material, in accordance with *Formula 5.16.1B.* *Formula 5.16.1B.* Determining the Density Factor *(D_f)* of mix design bituminous concrete: $$D_f = \left(\frac{Gse - Gsb}{Gsa - Gsb}\right)$$ Where: D_f = Density Factor or multiplier determined by AASHTO R-35(M) Gse = Effective Specific Gravity determined by AASHTO M-323 at plant Gsa = Apparent Specific Gravity determined by AASHTO T 84/85 of mix design Gsb = Bulk Specific Gravity determined by AASHTO T 84/85 of mix design
R 26	Quality Control Plans must be formatted in accordance with AASHTO R 26, certifying suppliers of performance-graded asphalt binders, Section 9.0, Suppliers Quality Control Plan, and "NEAUPG Model PGAB QC Plan." 1. The Department requires that all laboratory technician(s) responsible for testing PG-binders be certified or Interim Qualified by the New England Transportation Technician Certification Program (NETTCP) as a PG Asphalt Binder Lab Technician. 2. Sampling of asphalt binders should be done under the supervision of qualified technician. NECTP "Manual of Practice," Chapter 2 Page 2-4 (Key Issues 1-8). 3. A copy of the Manual of Practice for testing asphalt binders in accordance with the Superpave PG Grading system shall be in the testing laboratory. 4. All laboratories testing binders for the Department are required to be accredited by the AASHTO Materials Reference Laboratory (AMRL). 5. Sources interested in being approved to supply PG-binders to the Department by use of an "in-line blending system," must record properties of blended material, and additives used. 6. Each source of supply of PG-binder must indicate that the binders contain no additives used to modify or enhance their performance properties. Binders that are manufactured using additives, modifiers, extenders etc., shall disclose the type of additive, percentage and any handling specifications/limitations required. Suppliers shall provide AASHTO M-320 Table 2 testing at a minimum of once per month on one sample of material. Each supplier shall rotate the PG grade each month (including polymer-modified asphalt (PMA)), so that data can be collected for all the grades produced.

Formatted: Numbered + Level: 1 + Numbering Style: 1, 2, 3, … + Start at: 1 + Alignment: Left + Aligned at: 0.25" + Tab after: 0.5" + Indent at: 0.5"

Formatted: Numbered + Level: 1 + Numbering Style: 1, 2, 3, … + Start at: 1 + Alignment: Left + Aligned at: 0.25" + Tab after: 0.5" + Indent at: 0.5"

Formatted: Numbered + Level: 1 + Numbering Style: 1, 2, 3, … + Start at: 1 + Alignment: Left + Aligned at: 0.25" + Tab after: 0.5" + Indent at: 0.5"

Formatted: Numbered + Level: 1 + Numbering Style: 1, 2, 3, … + Start at: 1 + Alignment: Left + Aligned at: 0.25" + Tab after: 0.5" + Indent at: 0.5"

Formatted: Numbered + Level: 1 + Numbering Style: 1, 2, 3, … + Start at: 1 + Alignment: Left + Aligned at: 0.25" + Tab after: 0.5" + Indent at: 0.5"

Formatted: Numbered + Level: 1 + Numbering Style: 1, 2, 3, … + Start at: 1 + Alignment: Left + Aligned at: 0.25" + Tab after: 0.5" + Indent at: 0.5"

Field Code Changed

ON-THE-JOB TRAINING (OJT) WORKFORCE DEVELOPMENT PILOT:

Description

To provide construction industry related job opportunities to minorities, women and economically disadvantaged individuals; and to increase the likelihood of a diverse and inclusive workforce on Connecticut Department of Transportation (ConnDOT) projects.

All contractors (existing and newcomers) will be automatically placed in the Workforce Development Pilot. Standard OJT requirements typically associated with individual projects will no longer be applied at the project level for new projects. Instead, these requirements will be applicable on an annual basis for each contractor performing work on ConnDOT projects.

The OJT Workforce Development Pilot will allow a contractor to train employees on Federal, State and privately funded projects located in Connecticut. However, contractors should give priority to training employees on ConnDOT Federal-Aid funded projects.

Funding

The Department will establish an OJT fund annually from which contractors may bill the Department directly for eligible trainee hours. The funds for payment of trainee hours on federal-aid projects will be allocated from the ½ of 1% provided for OJT funding, and will be based on hours trained, not to exceed a maximum of $25,000.00 per year; per contractor.

Minorities and Women

Developing, training and upgrading of minorities, women and economically disadvantaged individuals toward journeyperson level status is the primary objective of this special training provision. Accordingly, the Contractor shall make every effort to enroll minority, women and economically disadvantaged individuals as trainees to the extent that such persons are available within a reasonable area of recruitment. This training commitment is not intended, and shall not be used, to discriminate against any applicant for training whether a member of a minority group or not.

Assigning Training Goals

The Department, through the OJT Program Coordinator, will assign training goals for a calendar year based on the contractor's past two year's activities and the contractor's anticipated upcoming year's activity with the Department. At the beginning of each year, all contractors eligible will be contacted by the Department to determine the number of trainees that will be assigned for the upcoming calendar year. At that time, the Contractor shall enter into an agreement with the Department to provide a self-imposed on-the-job training program for the calendar year. This agreement will include a specific number of annual training goals agreed to by both parties. The number of training assignments may range from one (1) to six (6) per

contractor per calendar year. Each January, a summary of the trainees required and the OJT Workforce Development Pilot package will be sent to participating contractors. The number of trainees assigned to each contractor in the summary will increase proportionately not to exceed 6, as shown in the following table. This package will also be provided to contractors as they become newly eligible for the OJT Workforce Development Pilot throughout the remainder of the year. Projects awarded after September 30 will be included in the following year's Program.

The dollar thresholds for training assignments are as follows:

$4.5 – 8 million=	1 trainee
$ 9 – 15 million=	2 trainees
$16 – 23 million=	3 trainees
$24 – 30 million=	4 trainees
$31 – 40 million=	5 trainees
$41 – and above=	6 trainees

Training Classifications

Preference shall be given to providing training in the following skilled work classifications. However, the classifications established are not all-inclusive:

Equipment Operators	Electricians
Laborers	Painters
Carpenters	Iron / Reinforcing Steel Workers
Concrete Finishers	Mechanics
Pipe Layers	Welders

The Department has on file common training classifications and their respective training requirements; that may be used by the contractors. Contractors shall submit new classifications for specific job functions that their employees are performing. The Department will review and recommend for acceptance the new classifications proposed by contractors, if applicable. New classifications shall meet the following requirements:

Proposed training classifications are reasonable and realistic based on the job skill classification needs, and the number of training hours specified in the training classification is consistent with common practices and provides enough time for the trainee to obtain journeyman level status.

Where feasible, 25% percent of apprentices or trainees in each occupation shall be in their first year of apprenticeship or training. The number of trainees shall be distributed among the work classifications on the basis of the contractor's needs and the availability of journeymen in the various classifications within a reasonable area of recruitment.

No employee shall be employed as a trainee in any classification in which they have successfully completed a training course leading to journeyman level status or in which they have been employed as a journeyman.

Records and Reports

The Contractor shall maintain enrollment in the program and submit all required reports documenting company compliance under these contract requirements. These documents and any other information shall be submitted to the OJT Program Coordinator as requested.

Upon the trainee's completion and graduation from the program, the Contractor shall provide each trainee with a certification Certificate showing the type and length of training satisfactorily completed.

Trainee Interviews

In order to determine the continued effectiveness of the OJT Program in Connecticut, the department will periodically conduct personal interviews with current trainees and may survey recent graduates of the program. This enables the OJT Program Coordinator to modify and improve the program as necessary. Trainee interviews are generally conducted at the job site to ensure that the trainees' work and training is consistent with the approved training program.

Trainee Wages

Contractors shall compensate trainees on a graduating pay scale based upon a percentage of the prevailing minimum journeyman wages (Davis-Bacon Act). Minimum pay shall be as follows:

60 percent	of the journeyman wage for the first half of the training period
75 percent	of the journeyman wage for the third quarter of the training period
90 percent	of the journeyman wage for the last quarter of the training period

In no case, will the trainee be paid less than the prevailing rate for general laborer as shown in the contract wage decision (must be approved by the Department of Labor).

Achieving or Failing to Meet Training Goals

The Contractor will be credited for each trainee currently enrolled or who becomes enrolled in the approved training program and providing they receive the required training under the specific training program. Trainees will be allowed to be transferred between projects if required by the Contractor's schedule and workload. The OJT Program Coordinator must be notified of transfers within five (5) days of the transfer or reassignments by e-mail (Phylisha.Coles@ct.gov).

Where a contractor does not or cannot achieve its annual training goal with female or minority trainees, they must produce adequate Good Faith Efforts documentation. Good Faith Efforts are those designed to achieve equal opportunity through positive, aggressive, and continuous result-oriented measures. 23 CFR § 230.409(g) (4). Contractors should request minorities and females from unions when minorities and females are under-represented in the contractor's workforce.

Whenever a contractor requests ConnDOT approval of someone other than a minority or female, the contractor must submit documented evidence of its Good Faith Efforts to fill that position with a minority or female. When a non-minority male is accepted, a contractor must continue to attempt to meet its remaining annual training goals with females and minorities.

Where a contractor has neither attained its goal nor submitted adequate Good Faith Efforts documentation, ConnDOT will issue a letter of non-compliance. Within thirty (30) days of receiving the letter of non-compliance, the contractor must submit a written Corrective Action Plan (CAP) outlining the steps that it will take to remedy the non-compliance. The CAP must be approved by ConnDOT. Failure to comply with the CAP may result in your firm being found non-responsive for future projects.

Measurement and Payment

Optional reimbursement will be made to the contractor for providing the required training under this special provision on ConnDOT Federal-Aid funded projects only.

Contractor will be reimbursed at $0.80 for each hour of training given to an employee in accordance with an approved training or apprenticeship program. This reimbursement will be made even though the Contractor receives additional training program funds from other sources, provided such other source does not specifically prohibit the contractor from receiving other reimbursement.

Reimbursement for training is made annually or upon the trainees completion and not on a monthly basis. No payment shall be made to the Contractor if either the failure to provide the required training, or the failure to hire the trainee as a journeyperson, is caused by the Contractor.

Program reimbursements will be made directly to the prime contractor on an annual basis. To request reimbursement, prime contractors must complete the Voucher for OJT Workforce Development Pilot Hourly Reimbursement for each trainee in the OJT Program. This form is included in the OJT Workforce Development Pilot package and is available on the Department's web site at:

www.ct.gov/dot

The completed form must be submitted to the Office of Contract Compliance for approval. The form is due on the 15th day of January for each trainee currently enrolled and for hours worked on ConnDOT Federal-Aid funded projects only.

D.B.E. SUBCONTRACTORS AND MATERIAL SUPPLIERS OR MANUFACTURERS

January 2013

I. ABBREVIATIONS AND DEFINITIONS AS USED IN THIS SPECIAL PROVISION

A. *CTDOT* means the Connecticut Department of Transportation.

B. *USDOT* means the U.S. Department of Transportation, including the Office of the Secretary, the Federal Highway Administration ("FHWA"), the Federal Transit Administration ("FTA"), and the Federal Aviation Administration ("FAA").

C. *Broker* means a party acting as an agent for others in negotiating Contracts, Agreements, purchases, sales, etc., in return for a fee or commission.

D. *Contract, Agreement or Subcontract* means a legally binding relationship obligating a seller to furnish supplies or services (including but not limited to, construction and professional services) and the buyer to pay for them. For the purposes of this provision, a lease for equipment or products is also considered to be a Contract.

E. *Contractor* means a consultant, second party or any other entity under Contract to do business with CTDOT or, as the context may require, with another Contractor.

F. *Disadvantaged Business Enterprise ("DBE")* means a for profit small business concern:

1. That is at least 51 percent owned by one or more individuals who are both socially and economically disadvantaged or, in the case of a corporation, in which 51 percent of the stock is owned by one or more such individuals; and

2. Whose management and daily business operations are controlled by one or more of the socially and economically disadvantaged individuals who own it; and

3. Certified by CTDOT under Title 49 of the Code of Federal Regulations, Part 26, (Title 49 CFR Part 23 of the Code of Federal Regulations for Participation of Disadvantaged Business Enterprise in Airport Concessions)

G. *USDOT-assisted Contract* means any Contract between CTDOT and a Contractor (at any tier) funded in whole or in part with USDOT financial assistance.

H. *Good Faith Efforts ("GFE")* means all necessary and reasonable steps to achieve a DBE goal or other requirement which by their scope, intensity, and appropriateness to the objective, can reasonably be expected to fulfill the program requirement.

I. *Small Business Concern* means, with respect to firms seeking to participate as DBEs in USDOT-assisted Contracts, a small business concern as defined pursuant to Section 3 of the Small Business Act and Small Business Administration ("SBA") regulations implementing it (13 CFR Part 121) that also does not exceed the cap on average annual gross receipts in 49 CFR Part 26, Section 26.65(b).

J. *Socially and Economically Disadvantaged Individual* means any individual who is a citizen (or lawfully admitted permanent resident) of the United States and who is:

1. Any individual who CTDOT finds, on a case-by-case basis, to be a socially and economically disadvantaged individual.

2. Any individuals in the following groups, members of which are rebuttably presumed to be socially and economically disadvantaged:

    - "Black Americans", which includes persons having origins in any of the Black racial groups of Africa;
    - "Hispanic Americans", which includes persons of Mexican, Puerto Rican, Cuban, Dominican, Central or South American, or other Spanish or Portuguese culture or origin, regardless of race;
    - "Native Americans", which includes persons who are American Indians, Eskimos, Aleuts, or Native Hawaiians.
    - "Asian-Pacific Americans", which includes persons whose origins are from Japan, China, Taiwan, Korea, Burma (Myanmar), Vietnam, Laos, Cambodia (Kampuchea), Thailand, Malaysia, Indonesia, the Philippines, Brunei, Samoa, Guam, the U.S. Trust Territories of the Pacific Islands (Republic of Palau), the Commonwealth of the Northern Marianas Islands, Macao, Fiji, Tonga, Kiribati, Juvalu, Nauru, or Federated States of Micronesia;
    - "Subcontinent Asian Americans", which includes persons whose origins are from India, Pakistan, Bangladesh, Bhutan, the Maldives Islands, Nepal or Sri Lanka;
    - Women;
    - Any additional groups whose members are designated as socially and economically disadvantaged by the SBA, at such time as the SBA designation becomes effective.

K. *Commercially Useful Function ("CUF")* means the DBE is responsible for the execution of the work of the contract and is carrying out its responsibilities by actually performing, managing, and supervising the work involved with its own forces and equipment. The DBE must be responsible for procuring, determining quantity, negotiating price, determining quality and paying for all materials (where applicable) associated with their work. The DBE must also perform at least 30% of the total cost of its contract with its own workforce.

II. ADMINISTRATIVE REQUIREMENTS

A. General Requirements

A DBE goal percentage equaling **Twelve Percent (12%)** of the Contract value has been established for this Contract. This DBE goal percentage will be applied to the final Contract value to ultimately determine the required DBE goal. If additional work is required, DBE firms should be provided the appropriate opportunities to achieve the required DBE goal.

In order to receive credit toward the Contract DBE goal, the firms utilized as DBE subcontractors or suppliers must be certified as DBEs in the type of work to be counted for credit by CTDOT's Office of Contract Compliance prior to the date of the execution of the subcontract. Neither CTDOT nor the State of Connecticut's Unified Certification Program (UCP) makes any representation as to any DBE's technical or financial ability to perform the work. Prime contractors are solely responsible for performing due diligence in hiring DBE subcontractors.

All DBEs shall perform a CUF for the work that is assigned to them. The Contractor shall monitor and ensure that the DBE is in compliance with this requirement. The Connecticut DBE UPC Directory of certified firms can

be found on the CTDOT website http://www.ct.gov/dot. The directory lists certified DBE firms with a description of services that they are certified to perform. Only work identified in this listing may be counted towards the project's DBE goal. A DBE firm may request to have services added at any time by contacting CTDOT's Office of Contract Compliance. No credit shall be counted for any DBE firm found not to be performing a CUF.

Once a Contract is awarded, all DBEs that were listed on the pre-award DBE commitment document must be utilized. The Contractor is obligated to provide the value and items of the work originally established in the pre-award documentation to the DBE firms listed in the pre-award documentation. Any modifications to the pre-award commitment must follow the procedure established in Section II-C.

The Contractor shall designate a liaison officer who will administer the Contractor's DBE program. Upon execution of this Contract, the name of the liaison officer shall be furnished in writing to CTDOT's unit administering the Contract, CTDOT's Office of Contract Compliance and CTDOT's Office of Construction ("OOC"). Contact information for the designated liaison officer shall be furnished no later than the scheduled date for the pre-construction meeting.

The Contractor shall submit a bi-monthly report to the appropriate CTDOT unit administering the Contract. This report shall indicate what work has been performed to date, with the dollars paid and percentage of DBE goal completed.

Verified payments made to DBEs shall be included in this bi-monthly report. A sample form is included on the CTDOT website.

In addition, the report shall include:

1. A projected time frame of when the remaining work is to be completed for each DBE.

2. A statement by the Contractor either confirming that the approved DBEs are on schedule to meet the Contract goal, or that the Contractor is actively pursuing a GFE.

3. If retainage is specified in the Contract specifications, then a statement of certification that the subcontractors' retainage is being released in accordance with 1.08.01 (Revised or supplemented).

Failure by the Contractor to provide the required reports may result in CTDOT withholding an amount equal to one percent (1%) of the monthly estimate until the required documentation is received.

The Contractor shall receive DBE credit when a DBE, or any combination of DBEs, perform work under the Contract in accordance with this specification.

Only work actually performed by and/or services provided by DBEs which are certified for such work and/or services, as verified by CTDOT, can be counted toward the DBE goal. Supplies and equipment a DBE purchases or leases from the Contractor or its affiliate cannot be counted toward the goal.

Monitoring of the CUF will occur by CTDOT throughout the life of the project. If it is unclear that the DBE is performing the work specified in its subcontract with the prime Contractor, further review may be required. If it is determined that the DBE is not performing a CUF, then the work performed by that DBE will not be counted towards the DBE goal percentage.

B. Subcontract Requirements

The Contractor shall submit to CTDOT's OOC all requests for subcontractor approvals on the standard CLA-12 forms provided by CTDOT. The dollar amount and items of work identified on the CLA-12 form must, at minimum, equal the dollar value submitted in the pre-award commitment. CLA-12 forms can be found at http://www.ct.gov/dot/construction under the "Subcontractor Approval" section. All DBE subcontractors must be identified on the CLA-12 form, regardless of whether they are being utilized to meet a Contract goal percentage. A copy of the legal Contract between the Contractor and the DBE subcontractor/supplier, a copy of the Title VI Contractor Assurances and a copy of the Required Contract Provision for Federal Aid Construction Contracts (Form FHWA-1273) (Federal Highway Administration projects only) must be submitted along with a request for subcontractor approval. These attachments cannot be substituted by reference.

If retainage is specified in the Contract specifications, then the subcontract agreement must contain a prompt payment mechanism that acts in accordance with Article 1.08.01 (Revised or supplemented).

If the Contract specifications do not contain a retainage clause, the Contractor shall not include a retainage clause in any subcontract agreement, and in this case, if a Contractor does include a retainage clause, it shall be deemed unenforceable.

In addition, the following documents are to be included with the CLA-12, if applicable:

- An explanation indicating who will purchase material.
- A statement explaining any method or arrangement for utilization of the Contractor's equipment.

The subcontract must show items of work to be performed, unit prices and, if a partial item, the work involved by all parties. If the subcontract items of work or unit prices are modified, the procedure established in Section II-C must be followed.

Should a DBE subcontractor further sublet items of work assigned to it, only lower tier subcontractors who are certified as a DBE firm will be counted toward the DBE goal. If the lower tier subcontractor is a non-DBE firm, the value of the work performed by that firm will not be counted as credit toward the DBE goal.

The use of joint checks between a DBE firm and the Contractor is acceptable, provided that written approval is received from the OOC prior to the issuance of any joint check. Should it become necessary to issue a joint check between the DBE firm and the Contractor to purchase materials, the DBE firm must be responsible for negotiating the cost, determining the quality and quantity, ordering the material and installing (where applicable), and administering the payment to the supplier. The Contractor should not make payment directly to suppliers.

Each subcontract the Contractor signs with a subcontractor must contain the following assurance:

"The subcontractor/supplier/manufacturer shall not discriminate on the basis of race, color, national origin, or sex in the performance of this contract. The contractor shall carry out applicable requirements of 49 CFR Part 26 in the award and administration of DOT-assisted contracts. Failure by the contractor/subcontractor/supplier/manufacturer to carry out these requirements is a material breach of this contract, which may result in the termination of this contract or such other remedy as the recipient deems appropriate."

C. Modification to Pre-Award Commitment

Contractors may not terminate for convenience any DBE subcontractor or supplier that was listed on the pre-award DBE commitment without prior written approval of the OOC. This includes, but is not limited to, instances

in which a Contractor seeks to perform work originally designated for a DBE subcontractor with its own forces or those of an affiliate, a non-DBE firm, or with another DBE firm. Prior to approval, the Contractor must demonstrate to the satisfaction of the OOC, that it has good cause, as found in 49CFR Part 26.53 (f)(3), for termination of the DBE firm.

Before transmitting its request for approval to terminate pre-award DBE firms to the OOC, the Contractor must give written notice to the DBE subcontractor and include a copy to the OOC of its notice to terminate and/or substitute, and the reason for the notice.

The Contractor must provide five (5) days for the affected DBE firm to respond. This affords the DBE firm the opportunity to advise the OOC and the Contractor of any reasons why it objects to the termination of its subcontract and why the OOC should not approve the Contractor's action.

Once the Contract is awarded, should there be any amendments or modifications of the approved pre-award DBE submission other than termination of a DBE firm, the Contractor shall follow the procedure below that best meets the criteria associated with the reason for modification:

1. If the change is due to a scope of work revision or non-routine quantity revision by CTDOT, the Contractor must notify CTDOT's OOC in writing or via electronic mail that their DBE participation on the project may be impacted as soon as they are aware of the change. In this case, a release of work from the DBE firm may not be required; however the Contractor must concurrently notify the DBE firm in writing, and copy the OOC for inclusion in the project DBE file. This does not relieve the Contractor of its obligation to meet the Contract specified DBE goal, or of any other responsibility found in this specification.

2. If the change is due to a factor other than a CTDOT directive, a request for approval in writing or via electronic mail of the modification from the OOC must be submitted, along with an explanation of the change(s), prior to the commencement of work. The Contractor must also obtain a letter of release from the originally named DBE indicating their concurrence with the change, and the reason(s) for their inability to perform the work. In the event a release cannot be obtained, the Contractor must document all efforts made to obtain it.

3. In the event a DBE firm that was listed in the pre-award documents is **unable** or **unwilling** to perform the work assigned, the Contractor shall:

    - Notify the OOC Division Chief immediately and make efforts to obtain a release of work from the firm.

    - Submit documentation that will provide a basis for the change to the OOC for review and approval prior to the implementation of the change.

    - Use the DBE Directory to identify and contact firms certified to perform the type of work that was assigned to the unable or unwilling DBE firm. The Contractor should also contact CTDOT's Office of Contract Compliance for assistance in locating additional DBE firms to the extent needed to meet the contract goal.

Should a DBE subcontractor be terminated or fail to complete work on the Contract for any reason, the Contractor must make a GFE to find another DBE subcontractor to substitute for the original DBE. The DBE replacement shall be given every opportunity to perform at least the same amount of work under the Contract as the original DBE subcontractor.

If the Contractor is unable to find a DBE replacement:

- The Contractor should identify other contracting opportunities and solicit DBE firms in an effort to meet the Contract DBE goal requirement, if necessary, and provide documentation to support a GFE. (Refer to GFE in Section III.)

- The Contractor must demonstrate that the originally named DBE, who is unable or unwilling to perform the work assigned, is in default of its subcontract, or identify other issues that affected the DBE firm's ability to perform the assigned work. **The Contractor's ability to negotiate a more advantageous agreement with another subcontractor is not a valid basis for change.**

III. GOOD FAITH EFFORTS

The DBE goal is **NOT** reduced or waived for projects where the Contractor receives a Pre-Award GFE determination from the Office of Contract Compliance prior to the award of the Contract. It remains the responsibility of the Contractor to make a continuing GFE to achieve the specified Contract DBE goal. The Contractor shall pursue every available opportunity to obtain additional DBE firms and document all efforts made in such attempts.

At the completion of all Contract work, the Contractor shall submit a final report to CTDOT`s unit administering the Contract indicating the work done by and the dollars paid to DBEs. Only verified payments made to DBEs performing a CUF will be counted towards the Contract goal.

Goal attainment is based on the total Contract value, which includes all construction orders created during the Contract. If the Contractor does not achieve the specified Contract goal for DBE participation or has not provided the value of work to the DBE firms originally committed to in the pre-award submission, the Contractor shall submit documentation to CTDOT`s unit administering the Contract detailing the GFE made during the performance of the Contract to satisfy the goal.

A GFE should consist of the following, where applicable (CTDOT reserves the right to request additional information):

1. A detailed statement of the efforts made to replace an unable or unwilling DBE firm, and a description of any additional subcontracting opportunities that were identified and offered to DBE firms in order to increase the likelihood of achieving the stated goal.

2. A detailed statement, including documentation of the efforts made to contact and solicit bids from certified DBEs, including the names, addresses, and telephone numbers of each DBE firm contacted; the date of contact and a description of the information provided to each DBE regarding the scope of services and anticipated time schedule of work items proposed to be subcontracted and the response from firms contacted.

3. Provide a detailed explanation for each DBE that submitted a subcontract proposal which the Contractor considered to be unacceptable stating the reason(s) for this conclusion.

4. Provide documentation, if any, to support contacts made with CTDOT requesting assistance in satisfying the specified Contract goal.

5. Provide documentation of all other efforts undertaken by the Contractor to meet the defined goal. Additional documentation of efforts made to obtain DBE firms may include but will not be limited to:
   - Negotiations held in good faith with interested DBE firms, not rejecting them without sound reasons.
   - Written notice provided to a reasonable number of specific DBE firms in sufficient time to allow effective participation.
   - Those portions of work that could be performed by readily available DBE firms.

In instances where the Contractor can adequately document or substantiate its GFE and compliance with other DBE Program requirements, the Contractor will have satisfied the DBE requirement and no administrative remedies will be imposed.

IV. PROJECT COMPLETION

At the completion of all Contract work, the Contractor shall:

1. Submit a final report to CTDOT`s unit administering the Contract indicating the work done by, and the dollars paid to DBEs.

2. Submit verified payments made to all DBE subcontractors for the work that was completed.

3. Submit documentation detailing any changes to the DBE pre-award subcontractors that have not met the original DBE pre-award commitment, including copies of the Department's approvals of those changes.

4. Retain all records for a period of three (3) years following acceptance by CTDOT of the Contract and those records shall be available at reasonable times and places for inspection by authorized representatives of CTDOT and Federal agencies. If any litigation, claim, or audit is started before the expiration of the three (3) year period, the records shall be retained until all litigation, claims, or audit findings involving the records are resolved.

If the Contractor does not achieve the specified Contract goal for DBE participation in addition to meeting the dollar value committed to the DBE subcontractors identified in the pre-award commitment, the Contractor shall submit documentation to CTDOT`s unit administering the Contract detailing the GFE made during the performance of the Contract to satisfy the goal.

V. SHORTFALLS

A. Failure to meet DBE goals

As specified in (II-A) above, attainment of the Contract DBE goal is based on the final Contract value. The Contractor is expected to achieve the amount of DBE participation originally committed to at the time of award; however, additional efforts must be made to provide opportunities to DBE firms in the event a Contract's original value is increased during the life of the Contract.

The Contractor is expected to utilize the DBE subcontractors originally committed in the DBE pre-award documentation for the work and dollar value that was originally assigned.

If a DBE is terminated or is unable or unwilling to complete its work on a Contract, the Contractor shall make a GFE to replace that DBE with another certified DBE to meet the Contract goal.

The Contractor shall immediately notify the OOC of the DBE's inability or unwillingness to perform, and provide reasonable documentation and make efforts to obtain a release of work from the firm.

If the Contractor is unable to find a DBE replacement, then the Contractor should identify other contracting opportunities and solicit DBE firms in an effort to meet the Contract DBE goal requirement, if necessary, and provide documentation to support a GFE.

When a DBE is unable or unwilling to perform, or is terminated for just cause, the Contractor shall make a GFE to find other DBE opportunities to increase DBE participation to the extent necessary to at least satisfy the Contract goal.

For any DBE pre-award subcontractor that has been released appropriately from the project, no remedy will be assessed, provided that the Contractor has met the criteria described in Section II-C.

B. Administrative Remedies for Non-Compliance:

In cases where the Contractor has failed to meet the Contract specified DBE goal or the DBE pre-award commitment, and where no GFE has been demonstrated, then one or more of the following administrative remedies will be applied:

1. A reduction in Contract payments to the Contractor as determined by CTDOT, not to exceed the shortfall amount of the **DBE goal**. The maximum shortfall will be calculated by multiplying the Contract DBE goal (adjusted by any applicable GFE) by the final Contract value, and subtracting any verified final payments made to DBE firms by the Contractor.

2. A reduction in Contract payments to the Contractor determined by CTDOT, not to exceed the shortfall amount of the **pre-award commitment**. The maximum shortfall will be calculated by subtracting any verified final payments made by the Contractor to each DBE subcontractor from the amount originally committed to that subcontractor in the pre-award commitment.

3. A reduction in Contract payments to the Contractor determined by CTDOT for any pre-award DBE subcontractor who has not obtained the dollar value of work identified in the DBE pre-award commitment and has not followed the requirements of Section II-C or for any DBE firm submitted for DBE credit that has not performed a CUF.

4. The Contractor being required to submit a written DBE Program Corrective Action Plan to CTDOT for review and approval, which is aimed at ensuring compliance on future projects.

5. The Contractor being required to attend a Non-Responsibility Meeting on the next contract where it is the apparent low bidder.

6. The Contractor being suspended from bidding on contracts for a period not to exceed six (6) months.

VI. CLASSIFICATIONS OTHER THAN SUBCONTRACTORS

A. Material Manufacturers

Credit for DBE manufacturers is 100% of the value of the manufactured product. A manufacturer is a firm that operates or maintains a factory or establishment that produces on the premises the materials or supplies obtained by the Contractor.

If the Contractor elects to utilize a DBE manufacturer to satisfy a portion of, or the entire specified DBE goal, the Contractor must provide the OOC with:

- Subcontractor Approval Form (CLA-12) indicating the firm designation,
- An executed "Affidavit for the Utilization of Material Suppliers or Manufacturers" (sample attached), and
- Substantiation of payments made to the supplier or manufacturer for materials used on the project.

B. Material Suppliers (Dealers)

Credit for DBE dealers/suppliers is limited to 60% of the value of the material to be supplied, provided such material is obtained from an approved DBE dealer/supplier.

In order for a firm to be considered a regular dealer, the firm must own, operate, or maintain a store, warehouse, or other establishment in which the materials, supplies, articles or equipment of the general character described by the specifications and required under the contract are bought, kept in stock, and regularly sold or leased to the public in the usual course of business. At least one of the following criteria must apply:

- To be a regular dealer, the firm must be an established, regular business that engages, as its principal business and under its own name, in the purchase and sale or lease of the products in question.
- A person may be a regular dealer in such bulk items as petroleum products, steel, cement, gravel, stone, or asphalt without owning, operating or maintaining a place of business if the person both owns and operates distribution equipment for the products. Any supplementing of the regular dealers' own distribution equipment shall be by long term lease agreement, and not on an ad hoc or contract to contract basis.
- Packagers, brokers, manufacturers' representatives, or other persons who arrange or expedite transactions are not regular dealers within the meaning of this paragraph.

If the Contractor elects to utilize a DBE supplier to satisfy a portion or the entire specified DBE goal, the Contractor must provide the OOC with:

- Subcontractor Approval Form (CLA-12) indicating the firm designation,
- An executed "Affidavit for the Utilization of Material Suppliers or Manufacturers" (sample attached), and
- Substantiation of payments made to the supplier or manufacturer for materials used on the project.

C. Brokering

- Brokering of work for DBE firms who have been listed by the Department as certified brokers is allowed. Credit for those firms shall be applied following the procedures in Section VI-D.

- Brokering of work by DBEs who have been approved to perform subcontract work with their own workforce and equipment is not allowed, and is a Contract violation.

- Firms involved in the brokering of work, whether they are DBEs and/or majority firms who engage in willful falsification, distortion or misrepresentation with respect to any facts related to the project shall be referred to the U.S. DOT, Office of the Inspector General for prosecution under Title 18, U.S. Code, Part I, Chapter 47, Section 1020.

D. Non-Manufacturing or Non-Supplier DBE Credit

Contractors may count towards their DBE goals the following expenditures with DBEs that are not manufacturers or suppliers:

- Reasonable fees or commissions charged for providing a bona fide service such as professional, technical, consultant or managerial services and assistance in the procurement of essential personnel, facilities, equipment materials or supplies necessary for the performance of the Contract, provided that the fee or commission is determined by the OOC to be reasonable and consistent with fees customarily allowed for similar services.

- The fees charged only for delivery of materials and supplies required on a job site when the hauler, trucker, or delivery service is a DBE, and not the manufacturer, or regular dealer of the materials and supplies, and provided that the fees are determined by the OOC to be reasonable and not excessive as compared with fees customarily allowed for similar services.

- The fees or commissions charged for providing bonds or insurance specifically required for the performance of the Contract, provided that the fees or commissions are determined by CTDOT to be reasonable and not excessive as compared with fees customarily allowed for similar services.

E. Trucking

While technically still considered a subcontractor, the rules for counting credit for DBE trucking firms are as follows:

- The DBE must own and operate at least one fully licensed, insured, and operational truck used on the Contract.
- The DBE receives credit for the total value of the transportation services it provides on the Contract using trucks it owns, insures and operates using drivers it employs.
- The DBE may lease trucks from another DBE firm, including an owner-operator who is certified as a DBE. The DBE who leases trucks from another DBE receives credit for the total value of the transportation services the lessee DBE provides on the Contract.
- The DBE may lease trucks from a non-DBE firm; however the DBE may only receive credit for any fees or commissions received for arranging transportation services provided by the non-DBE firms. Additionally, the DBE firm must demonstrate that they are in full control of the trucking operation for which they are seeking credit.

VII. Suspected DBE Fraud

In appropriate cases, CTDOT will bring to the attention of the USDOT any appearance of false, fraudulent, or dishonest conduct in connection with the DBE program, so that USDOT can take the steps, e.g. referral to the

Department of Justice for criminal prosecution, referral to USDOT Inspector General, action under suspension and debarment or Program Fraud and Civil Penalties rules provided in 49 CFR Part 31.

CONNECTICUT DEPARTMENT OF TRANSPORTATION
(OFFICE OF CONSTRUCTION)
BUREAU OF ENGINEERING AND CONSTRUCTION

This affidavit must be completed by the State Contractor's DBE notarized and attached to the contractor's request to utilize a DBE supplier or manufacturer as a credit towards its DBE contract requirements; failure to do so will result in not receiving credit towards the contract DBE requirement.

State Contract No.

Federal Aid Project No.

Description of Project

I, _____, acting in behalf of _____,
(Name of person signing Affidavit) (DBE person, firm, association or corporation)
of which I am the _____ certify and affirm that _____
(Title of Person) (DBE person, firm, association or corporation)
is a certified Connecticut Department of Transportation DBE. I further certify and affirm that I have read and understand 49 CFR, Sec. 26.55(e)(2), as the same may be revised.

I further certify and affirm that _____ will assume the actual and
(DBE person, firm, association or Corporation)
for the provision of the materials and/or supplies sought by _____ .

If a manufacturer, I operate or maintain a factory or establishment that produces, on the premises, the materials, supplies, articles or equipment required under the contract an of the general character described by the specifications.

If a supplier, I perform a commercially useful function in the supply process. As a regular dealer, I, at a minimum, own and operate the distribution equipment for bulk items. Any supplementing of my distribution equipment shall be by long-term lease agreement, and not on an ad hoc or contract-by-contract basis.

I understand that false statements made herein are punishable by Law (Sec. 53a-157), CGS, as revised).

(Name of Corporation or Firm)

(Signature & Title of Official making the Affidavit)

Subscribed and sworn to before me, this _____ day of _____ 20 _____.

Notary Public (Commissioner of the Superior Court)

My Commission Expires_____

CERTIFICATE OF CORPORATION

I, _____, certify that I am the _____
(Official) (President)
of the Corporation named in the foregoing instrument; that I have been duly authorized to affix the seal of the Corporation to such papers as require the seal; that _____, who signed said instrument on behalf of the Corporation, was then _____ of said corporation; that said instrument was duly signed for and in behalf of said Corporation by authority of its governing body and is within the scope of its corporation powers.

_____ _____
(Signature of Person Certifying) (Date)

ITEM #0020903A – LEAD COMPLIANCE FOR MISCELLANEOUS EXTERIOR TASKS

Description:

Work under this item shall include the special handling measures and work practices required for miscellaneous exterior tasks that impact materials containing or covered by lead paint. Lead paint includes paint found to contain **any** detectable amount of lead by Atomic Absorption Spectrophotometry (AAS) or X-Ray Fluorescence (XRF). Examples of typical miscellaneous exterior tasks includes; work impacting signs, guiderails, minor bridge rehabilitation, catenary structures, canopy structures, spot paint removal, etc.

All activities shall be performed in accordance with the OSHA Lead in Construction Regulations (29 CFR 1926.62), the USEPA RCRA Hazardous Waste Regulations (40 CFR Parts 260 through 274), and the CTDEEP Hazardous Waste Regulations (RCSA 22a-209-1 and 22a-449(c)).

All activities shall be performed by individuals with appropriate levels of OSHA lead awareness and hazard communication training and shall supervised by the Contractors Competent Person on the job site at all times. The Contractors Competent Person is one who is capable of identifying existing and predictable hazards in the surroundings or working conditions which are unsanitary, hazardous or dangerous to employees, and who has authorization to take prompt corrective measures to eliminate them.

Deviations from these Specifications require the written approval of the Engineer.

Materials:

All materials shall be delivered to the job site in the original packages, containers, or bundles bearing the name of the manufacturer, the brand name and product technical description, with MSDS sheets as applicable.

No damaged or deteriorating materials shall be used. If material becomes contaminated with lead, the material shall be decontaminated or disposed of as lead-containing waste material. The cost to decontaminate and dispose of this material shall be at the expense of the Contractor.

The following material requirements are to be met if to be used during the work:

Fire retardant polyethylene sheet shall be in roll size to minimize the frequency of joints, with factory label indicating minimum six (6) mil thickness.

Polyethylene disposable bags shall be minimum six (6) mils thick.

Tape (or equivalent) product capable of sealing joints in adjacent polyethylene sheets and for the attachment of polyethylene sheets to finished or unfinished surfaces must be capable of adhering under both dry and wet conditions.

Cleaning Agents and detergent shall be lead specific, such as TriSodium Phosphate (TSP).

Chemical strippers and chemical neutralizers shall be compatible with the substrate as well as with each other. Such chemical stripper shall contain less than 50% Volatile Organic Compounds (VOCs) by weight in accordance with RCSA 22a-174-40 Table 40-1.

Labels and warning signs shall conform to 29 CFR 1926.62, 40 CFR 260 through 274 and 49 CFR 172 as appropriate.

Air filtration devices and vacuum units shall be equipped with High-Efficiency Particulate Air (HEPA) filters.

Construction Methods:

(1) Pre-Abatement Submittals and Notices

A. Prior to the start of **any** work on a contiguous per site basis that will generate hazardous lead waste above conditionally exempt small quantities (greater than 100 kg/month or greater than 1000 kg at any time), the Contractor shall obtain from the Engineer on a contiguous per site basis a temporary EPA Hazardous Waste Generators ID number, unless otherwise directed by the Engineer.

B. Fifteen (15) working days prior to beginning work that impacts lead paint, the Contractor shall submit the following to the Engineer:

1. Work plan for work impacting lead paint including engineering controls, methods of containment of debris and work practices to be employed, as needed, to minimize employee exposure and prevent the spread of lead contamination outside the Regulated Area.

2. Copies of all employee certificates, dated within the previous twelve (12) months, relating to OSHA lead awareness and hazard communication training and training in the use of lead-safe work practices. SSPC training programs may be accepted as meeting these requirements if it can be demonstrated that such training addressed all required topics.

   This information shall be updated and resubmitted annually, or as information changes, for the duration of the activities impacting lead to verify continued compliance.

3. Name and qualifications of Contractor's OSHA Competent Person under 29 CFR 1926.62.

4. Documentation from the Contractor, typed on company letterhead and signed by the Contractor, certifying that all employees listed therein have received the following:

   a. medical monitoring within the previous twelve (12) months, as required in 29 CFR 1926.62;
   b. biological monitoring within the previous six (6) months, as required in 29 CFR 1926.62;
   c. respirator fit testing within the previous twelve (12) months, as required in 29 CFR 1910.134 (for those who don a tight-fitting face piece respirator)

   This information shall be updated and resubmitted annually, or as information changes, for the duration of the activities impacting lead to verify continued compliance.

5. Names of the proposed non-hazardous construction and demolition (C&D) lead debris bulky waste disposal facility (CTDEEP-permitted Solid Waste landfill).

6. Names of the proposed scrap metal recycling facilities. The Contractor shall submit to the Engineer all documentation necessary to demonstrate the selected facility is able to accept lead-painted scrap metal.

7. Names of the proposed hazardous waste disposal facility (selected from the Department approved list provided herein), and copies of each facilities acceptance criteria and sampling frequency requirements.

8. Copies of the proposed hazardous waste transporters current USDOT Certificate of Registration for Hazardous Materials Transport, and the proposed transporters current Hazardous Waste Transporter Permits for the State of Connecticut and the waste destination State.

9. Negative exposure assessments conducted within the previous 12 months documenting that employee exposure to lead for each task is below the OSHA Action Level of 30 $\mu g/m^3$. If a negative exposure assessment has not been conducted, the Contractor shall submit its air monitoring program for the work tasks as part of the Work Plan. Until a negative exposure assessment is developed for each task impacting lead paint, the Contractor shall ensure that all workers and authorized persons entering the Regulated Area wear protective clothing and respirators in accordance with OSHA 29 CFR 1926.62.

No activity shall commence until all required submittals have been received and found acceptable to the Engineer. Those employees added to the Contractor's original list will be

allowed to perform work only upon submittal of acceptable documentation to, and review by, the Engineer.

Contractor shall provide the Engineer with a minimum of 48 hours notice in advance of scheduling, changing or canceling work activities.

(2) Lead Abatement Provisions

A. General Requirements:

All employees of the Contractor who perform work impacting lead paint shall be properly trained to perform such duties. In addition, the Contractor shall instruct all workers in all aspects of personnel protection, work procedures, emergency evacuation procedures and use of equipment including procedures unique to this project.

Contractor shall provide all labor, materials, tools, equipment, services, testing, and incidentals which are necessary or required to perform the work in accordance with applicable governmental regulations, industry standards and codes, and these Specifications.

Prior to beginning work, the Engineer and Contractor shall perform a visual survey of each work area and review conditions.

As necessary, the Contractor shall:

> Shut down and lock out electrical power, including all receptacles and light fixtures, where feasible. The use or isolation of electrical power will be coordinated with all other ongoing uses of electrical power at the site.

If adequate electrical supply is not available at the site, the Contractor shall supply temporary power. Such temporary power shall be sufficient to provide adequate lighting and power the Contractor's equipment. The Contractor is responsible for proper connection and installation of electrical wiring and shall ensure safe installation of electrical equipment in compliance with applicable electrical codes and OSHA requirements.

If water is not available at the site for the Contractor's use, the Contractor shall supply sufficient water for each shift to operate the wash facility/decontamination shower units in addition to the water needed at the work area.

The Engineer may provide a Project Monitor to monitor compliance of the Contractor and protect the interests of the Department. In such cases, no activity impacting lead paint shall be performed until the Project Monitor is on-site. Where no Project Monitor will be provided, Contractor shall proceed at the direction of the Engineer. Environmental sampling, including ambient air sampling, TCLP waste stream sampling, and dust wipe sampling, will be conducted by the State as it deems necessary throughout the project. Air monitoring to comply with the Contractor's obligations under OSHA remains solely responsibility of the Contractor.

If at any time, procedures for engineering, work practice, administrative controls or other topics are anticipated to deviate from those documented in the submitted and accepted Lead Work Plan, the Contractor shall submit a modification of its existing plan for review and acceptance by the Engineer prior to implementing the change.

If air samples collected outside of the Regulated Area during activities impacting lead paint indicate airborne lead concentrations greater than original background levels or 30 ug/m^3, whichever is larger, or if at any time visible emissions of lead paint extend out from the Regulated Area, an examination of the Regulated Area shall be conducted and the cause of such emissions corrected. Cleanup of surfaces outside the Regulated Area using HEPA vacuum equipment or wet cleaning techniques shall be done prior to resuming work.

Work outside the initial designated area(s) will not be paid for by the Engineer. The Contractor will be responsible for all costs incurred from these activities including repair of any damage.

B. Regulated Area

The Contractor shall establish a Regulated Area through the use of appropriate barrier tape or other means to control unauthorized access into the area where activities impacting lead paint are occurring. Warning signs meeting the requirements of 29 CFR 1926.62 shall be posted at all approaches to Regulated Areas. These signs shall read:

WARNING
LEAD WORK AREA
POISON
NO SMOKING OR EATING

The Contractor shall implement appropriate engineering controls such as poly drop cloths, local exhaust ventilation, wet dust suppression methods, etc. as necessary, and as approved by the Engineer, to prevent the spread of lead contamination beyond the Regulated Area in accordance with the Contractor's approved work plan. Should the previously submitted work plan prove to be insufficient to contain the contamination, the Contractor shall modify its plan and submit it for review by the Engineer.

C. Wash Facilities:

The Contractor shall provide handwash facilities in compliance with 29 CFR 1926.51(f) and 29 CFR 1926.62 <u>regardless of airborne lead exposure</u>.

If employee exposure to airborne lead exceeds the OSHA Permissible Exposure Limit of 50 micrograms per cubic meter (µg/m^3), shower rooms must be provided. The Shower Room shall be of sufficient capacity to accommodate the number of workers. One shower stall shall be provided for each eight (8) workers. Showers shall be equipped with hot and cold or warm

running water. Shower water shall be collected and filtered using best available technology and disposed of in accordance with all Federal, State and local laws, regulations and ordinances.

D. Personal Protection:

The Contractor shall initially determine if any employee performing construction tasks impacting lead paint may be exposed to lead at or above the OSHA Action Level of 30 $\mu g/m^3$. Assessments shall be based on initial air monitoring results as well as other relevant information. The Contractor may rely on historical air monitoring data obtained within the past 12 months under workplace conditions closely resembling the process, type of material, control methods, work practices and environmental conditions used and prevailing in the Contractors current operations to satisfy the exposure assessment requirements. Monitoring shall continue as specified in the OSHA standard until a negative exposure assessment is developed.

Until a negative exposure assessment is developed for each task impacting lead paint, the Contractor shall ensure that all workers and authorized person entering the Regulated Area wear protective clothing and respirators in accordance with OSHA 29 CFR 1926.62. Protective clothing shall include impervious coveralls with elastic wrists and ankles, head covering, gloves and foot coverings. Sufficient quantities shall be provided to last throughout the duration of the project.

Protective clothing provided by the Contractor and used during chemical removal operations shall be impervious to caustic materials. Gloves provided by the Contractor and used during chemical removal shall be of neoprene composition with glove extenders.

Respiratory protective equipment shall be provided and selection shall conform to 42 CFR Part 84, 29 CFR Part 1910.134, and 29 CFR Part 1926.62. A formal respiratory protection program must be implemented in accordance with 29 CFR Part 1926.62 and Part 1910.134.

E. Air Monitoring Requirements

The Contractor shall:

1. Provide air monitoring equipment including sample filter cassettes of the type and quantity required to properly monitor operations and personnel exposure surveillance throughout the duration of the project.

2. Conduct initial exposure monitoring to determine if any employee performing construction tasks impacting lead paint may be exposed to lead at or above the OSHA Action Level of 30 micrograms per cubic meter. Monitoring shall continue as specified in the OSHA standard until a negative exposure assessment is developed.

3. Conduct personnel exposure assessment air sampling, as necessary, to assure that workers are using appropriate respiratory protection in accordance with OSHA Standard 1926.62. Documentation of air sampling results must be recorded at the

work site within twenty-four (24) hours and shall be available for review until the job is complete.

F. Lead Abatement Procedures

The Contractor's Competent Person shall be at the job site at all times during work impacting lead.

Work impacting lead paint shall not begin until authorized by the Engineer, following a pre-work visual inspection by the Project Monitor or Engineer to verify existing conditions.

Any activity impacting lead painted surfaces shall be performed in a manner which minimizes the spread of lead dust contamination and generation of airborne lead.

The Contractor shall conduct exposure assessments for all tasks which impact lead paint in accordance with 29 CFR 1926.62(d) and shall implement appropriate personal protective equipment until negative exposure assessments are developed.

All work impacting the materials identified below shall be conducted within an established Regulated Area with a remote wash facility/decontamination system in accordance with "C. Wash Facilities" and the OSHA Lead in Construction Standard. In accordance with 29 CFR 1926.62, engineering controls and work practices shall be utilized to prevent the spread of lead dust and debris beyond the Regulated Area and limit the generation of airborne lead. All wastes containing lead paint shall be properly contained and secured for storage, transportation and disposal.

The Contractor shall ensure proper entry and exit procedures for workers and authorized persons who enter and leave the Regulated Area. All workers and authorized persons shall leave the Regulated Area and proceed directly to the wash or shower facilities where they will HEPA vacuum gross debris from work suit, remove and dispose of work suit, wash and dry face and hands, and vacuum clothes. Lead chips and dust must not be removed by blowing or shaking of clothing. Wash water shall be collected, filtered, and disposed of in accordance with Federal, State and local water discharge standards. Any permit required for such discharge shall be the responsibility of the Contractor.

No one shall eat, drink, smoke, chew gum or tobacco, or apply cosmetics while in the Regulated Area.

Data from the limited lead testing performed by the Engineer is documented in the reports listed in the "Notice to Contractor – Hazardous Materials Investigations" or is presented herein. Under no circumstances shall this information be the sole means used by the Contractor for determining the extent of lead painted materials. The Contractor shall be responsible for verification of all field conditions affecting performance of the work as described in these Specifications in accordance with OSHA, USEPA, USDOT and CTDEEP standards. Compliance with the applicable requirements is solely the responsibility of the Contractor.

The following details the extent of each phase of operation designated for this project. Phase areas may be combined or divided at the direction of the Engineer. Proceed through the sequencing of the work phases under the direction of the Engineer.

Bridge No. 03948R over Sound Beach Avenue, Greenwich, CT
Bridge No. 03955R over Tomac Avenue, Greenwich, CT

- **Lead paint is presumed present on the painted bridge surfaces of Bridge No. 03948R & 03955R.**

- **Any painted non-metallic debris and/or paint waste to be generated is presumed as RCRA/CT DEEP hazardous waste.**

While conducting work on the bridges, where it is necessary to impact the painted surfaces, the Contractor shall either:

a. **Remove the paint to be impacted prior to impacting/cutting/etc. the painted bridge surface in accordance with OSHA Lead in Construction Standard 29CFR 1926.62, or**
b. **Impact the painted bridge surface with the paint in place using methods which are fully in accordance with OSHA Lead in Construction Standard 29CFR 1926.62.**

The Contractor shall submit a Work Plan to ConnDOT outlining the exact procedures that will be used to perform the work, contain the spread of lead debris and protect the employees performing the required renovation work impacting the lead paint. No work shall be started by the Contractor until the Work Plan is approved by the Engineer.

All work impacting the lead paint materials shall be conducted within an established Regulated Area with a remote wash facility/decontamination system in accordance with "C. Wash Facilities" and the OSHA Lead in Construction Standard. In accordance with 29 CFR 1926.62, engineering controls and work practices shall be utilized to prevent the spread of lead dust and debris beyond the Regulated Area and limit the generation of airborne lead. All wastes containing lead paint shall be properly contained and secured for storage, transportation and disposal.

The Engineer has presumed all painted non-metallic debris and/or paint waste streams as RCRA hazardous waste. These waste materials shall be handled and disposed of in accordance with USEPA/CTDEEP Hazardous Waste Regulations as described under this Item 0020903A.

All steel and metal components generated from the miscellaneous exterior work tasks (painted or not) shall be segregated and recycled as scrap metal. The recycling of scrap

metal (regardless of lead paint concentration) is exempt from USEPA RCRA and CTDEEP Hazardous Waste Regulation.

Should lead contamination be discovered outside of the Regulated Area, the Contractor shall immediately stop all work in the Regulated Area, eliminate causes of such contamination and take steps to decontaminate non-work areas.

Special Requirements:

1. Demolition/Renovation:

    a. Demolish/renovate in a manner which minimizes the spread of lead contamination and generation of lead dust.

    b. Implement dust suppression controls, such as misters, local exhaust ventilation, etc. to minimize the generation of airborne lead dust.

    c. Segregate work areas from non-work areas through the use or barrier tape, drop cloths, etc.

    d. Clean up immediately after renovation/demolition has been completed

2. Chemical Removal:

    a. Apply chemical stripper in quantities and for durations specified by manufacturer.

    b. Where necessary, scrape lead paint from surface down to required level of removal (i.e. stabilized surface, bare substrate with no trace of residual pigment, etc.). Use sanding, hand scraping, and dental picks to supplement chemical methods as necessary.

    c. Apply neutralizer compatible with substrate and chemical agent to substrate following removal in accordance with manufacturer's instructions.

    d. Protect adjacent surfaces from damage from chemical removal.

    e. Maintain a portable eyewash station in the work area.

    f. Wear respirators that will protect workers from chemical vapors.

    g. Do not apply caustic agents to aluminum surfaces.

3. Mechanical Paint Removal:

a. Provide sanders, grinders, rotary wire brushes, or needle gun removers equipped with a HEPA filtered vacuum dust collection system. Cowling on the dust collection system for orbital-type tools must be capable of maintaining a continuous tight seal with the surface being abated. Cowling on the dust collection system for reciprocating-type tools shall promote an effective vacuum flow of loosened dust and debris. Inflexible cowlings may be used on flat surfaces only. Flexible contoured cowlings are required for curved or irregular surfaces.

b. Provide HEPA vacuums that are high performance designed to provide maximum static lift and maximum vacuum system flow at the actual operating vacuum condition with the shroud in use. The HEPA vacuum shall be equipped with a pivoting vacuum head.

c. Remove lead paint from surface down to required level of removal (i.e. stabilized surface, bare substrate with no trace of residual pigment, etc.). Use chemical methods, hand scraping, and dental picks to supplement abrasive removal methods as necessary.

d. Protect adjacent surfaces from damage from abrasive removal techniques.

e. "Sandblasting" type removal techniques shall not be allowed.

4. Component Removal/Replacement:

a. Wet down components which are to be removed to reduce the amount of dust generated during the removal process.

b. Remove components utilizing hand tools, and follow appropriate safety procedures during removal. Remove the components by approved methods which will provide the least disturbance to the substrate material. Do not damage adjacent surfaces.

c. Clean up immediately after component removals have been completed. Remove any dust located behind the component removed.

G. Prohibited Removal Methods:

The use of heat guns in excess of 700 degrees Fahrenheit to remove lead paint is prohibited.

The use of sand, steel grit, air, CO_2, baking soda, or any other blasting media to remove lead or lead paint without the use of a HEPA ventilated contained negative pressure enclosure is prohibited.

Power/pressure washing shall not be used to remove lead paint.

Compressed air shall not be utilized to remove lead paint.

Chemical strippers containing Methylene Chloride are prohibited. Any chemical stripping may be prohibited on a project by project basis.

Power tool assisted grinding, sanding, cutting, or wire brushing of lead paint without the use of cowled HEPA vacuum dust collection systems is prohibited.

Lead paint burning, busting of rivets painted with lead paint, welding of materials painted with lead paint, and torch cutting of materials painted with lead paint is prohibited. Where cutting, welding, busting, or torch cutting of materials is required, lead paint in the affected area must be removed first.

Chemical stripping of coatings from bridge components is generally prohibited unless specifically allowed on a project by project basis.

H. Clean-up and Visual Inspection:

The Contractor shall remove and containerize all lead waste material and visible accumulations of debris, paint chips and associated items.

During clean-up the Contractor shall utilize rags and sponges wetted with lead-specific detergent and water as well as HEPA filtered vacuum equipment.

The Engineer will conduct a visual inspection of the work areas in order to document that all surfaces have been maintained as free as practicable of accumulations of lead in accordance with 29 CFR 1926.62(h). If visible accumulations of waste, debris, lead paint chips or dust are found in the work area, the Contractor shall repeat the cleaning, at the Contractor's expense, until the area is in compliance. The visual inspection will detect incomplete work, damage caused by the abatement activity, and inadequate clean up of the work site.

I. Post-Work Regulated Area Deregulation:

Following an acceptable visual inspection, any engineering controls implemented may be removed.

A final visual inspection of the work area shall be conducted by the Competent Person and the Project Monitor or Engineer to ensure that all visible accumulations of suspect materials have been removed and that no equipment or materials associated with the lead paint removal remain. If this final visual inspection is acceptable, the Contractor will reopen the Regulated Area and remove all signage.

The Contractor shall restore all work areas and auxiliary areas utilized during work to conditions equal to or better than original. Any damage caused during the performance of the work activity shall be repaired by the Contractor at no additional expense to the State.

J. Waste Disposal/Recycling:

Non-metallic building debris waste materials tested and found to be non-hazardous Construction and Demolition (C&D) bulky waste shall be disposed of properly at a CTDEEP approved Solid Waste landfill as described under this Item 0020903A.

Metallic debris shall be segregated and recycled as scrap metal at an approved metal recycling facility.

Concrete, brick, etc. coated with <u>any amount of lead paint</u> cannot be crushed, recycled or buried on-site to minimize waste disposal unless tested and found to meet the RSR GA/Residential standards.

Hazardous lead debris shall be disposed of as described under this Item 0020903A.

The Contractor shall comply with the latest requirements of the USEPA RCRA Hazardous Waste Regulations 40 CFR 260-274 and the DEEP Hazardous/Solid Waste Management Standards 22a-449(c).

Hazardous lead debris shall be transported from the Project by a licensed hazardous waste transporter approved by the Department and disposed of at an EPA-permitted and Department-approved hazardous waste landfill within 90 days from the date of generation.

The Contractor must use one or more of the following Department-approved disposal facilities for the disposal of <u>hazardous</u> waste:

Clean Earth of North Jersey, Inc., (CENJ) 115 Jacobus Avenue, South Kearny, NJ 07105 Phone: (973) 344-4004; Fax: (973) 344-8652	Clean Harbors Environmental Services, Inc. 2247 South Highway 71, Kimball, NE 69145 Phone: (308) 235-8212; Fax: (308) 235-4307
Clean Harbors of Braintree, Inc. 1 Hill Avenue, Braintree, MA 02184 Phone: (781) 380-7134; Fax: (781) 380-7193	Cycle Chem (General Chemical Corp.) 217 South First Street, Elizabeth, NJ 07206 Phone: (908) 355-5800; Fax (908) 355-0562
EnviroSafe Corporation Northeast (former Jones Environmental Services (NE), Inc.) 263 Howard Street, Lowell, MA 01852 Phone: (978) 453-7772; Fax: (978) 453-7775	Environmental Quality Detroit, Inc. 1923 Frederick Street, Detroit, MI 48211 Phone: (800) 495-6059; Fax: (313) 923-3375
Republic Environmental Systems 2869 Sandstone Drive, Hatfield, PA 19440 Phone: (215) 822-8995; Fax: (215) 997-1293	Chemical Waste Management of New York 1550 Balmer Rd., Model City, NY 14107 Phone: (800) 843-3604; Fax: (716) 754-0211

Environmental Quality Company: Wayne Disposal Facility 49350 North I-94 Service Drive Belleville, MI 48111 Phone: (800) 592-5489; Fax: (800) 592-5329	Northland Environmental, Inc. (PSC Environmental Systems) 275 Allens Avenue, Providence, RI 02905 Phone: (401) 781-6340; Fax: (401) 781-9710

The apparent low bidder shall submit in writing, within fourteen days after Bid opening, (1) a letter listing the names of the hazardous waste disposal facilities (from the above list) that the bidder, if it is awarded the Contract, will use to receive hazardous material from this Project, and (2) a copy of each facility's acceptance criteria and sampling frequency requirements.

Any other Contractor which the Department may subsequently designate as the apparent low bidder shall make the aforementioned submissions within fourteen (14) days from the date on which the Department notifies the Contractor that it has become the apparent low bidder. If, however, the Department deems it is necessary for such a subsequent-designated Contractor to make said submissions within a shorter period of time, the Contractor shall make those submissions within the time designated by the Department.

Failure to comply with all of the above requirements may result in the rejection of the bid.

No facility may be substituted for the one(s) designated in the Contractor's submittal without the Engineer's prior approval. If the material cannot be accepted by any of the Contractor's designated facilities, the Department will supply the Contractor with the name(s) of other acceptable facilities.

Prior to the generation of any hazardous waste, the Contractor shall notify the Engineer of its selected hazardous waste transporter and disposal facility. The Contractor must submit to the Engineer (1) the transporter's current US DOT Certificate of Registration and (2) the transporter's current Hazardous Waste Transporter Permits for the State of Connecticut, the hazardous waste destination state and any other applicable states. The Engineer will then obtain on a contiguous per site basis a temporary EPA Generators ID number for the site that he will forward to the Contractor. Any changes in transporter or facility shall be immediately forwarded to the Engineer for review.

Handling, storage, transportation and disposal of hazardous waste materials generated as a result of execution of this project shall comply with all Federal, State and Local regulations including the USEPA RCRA Hazardous Waste Regulations (40 CFR Parts 260-271), the CTDEEP Hazardous Waste Regulations (22a-209 and 22a-449(c)), and the USDOT Hazardous Materials Regulations (49 CFR Part 171-180).

All debris shall be contained and collected daily or more frequently as directed by the Engineer, due to debris buildup. Debris shall be removed by HEPA vacuum collection. Such debris and paint chips shall be stored in leak-proof storage containers in the secured storage site, or as directed by the Engineer. The storage containers and storage locations shall be reviewed by the Engineer and shall be located in areas not subject to ponding. Storage containers shall be placed

on pallets and closed and covered with tarps at all times except during placement, sampling and disposal of the debris.

Hazardous waste materials are to be properly packed and labeled for transport by the Contractor is accordance with EPA, CTDEEP and USDOT regulations. The disposal of debris characterized as hazardous waste shall be completed within 90 calendar days of the date on which it began to be accumulated in the lined containers. Storage of containers shall be in accordance with current DEEP/EPA procedures.

The Contractor shall label hazardous waste storage containers with a 6-inch square, yellow, weatherproof, Hazardous Waste sticker in accordance with USDOT regulations.

Materials other than direct paint related debris which are incidental to the paint removal work activities (tarps, poly, plywood, PPE, gloves, decontamination materials, etc.) which may be contaminated with lead, shall be stored separately from the direct paint debris, and shall be sampled by the Engineer for waste disposal characterization testing. Such materials characterized as hazardous shall be handled/disposed of as described herein, while materials characterized as non-hazardous shall be disposed of as non-hazardous CTDEEP Solid Waste.

Direct paint related debris materials not previously sampled and characterized for disposal, which may be originally presumed to be hazardous waste, shall also be stored separately and sampled by the Engineer for ultimate waste disposal characterization testing and handled/disposed of based on that testing.

Project construction waste materials unrelated to the paint removal operations shall NOT be combined/stored with paint debris waste and/or incidental paint removal materials as they are not lead contaminated and shall NOT be disposed of as hazardous waste. The Engineer's on-site Inspectors shall conduct inspections to verify materials remain segregated.

The Contractor shall obtain and complete all paperwork necessary to arrange for material disposal, including disposal facility waste profile sheets. It is solely the Contractor's responsibility to co-ordinate the disposal of hazardous materials with its selected treatment/recycling/disposal facility(s). Upon receipt of the final approval from the facility, the Contractor shall arrange for the loading, transport and treatment/recycling/disposal of the materials in accordance with all Federal and State regulations. **No claim will be considered based on the failure of the Contractor's disposal facility(s) to meet the Contractor's production rate or for the Contractor's failure to select sufficient facilities to meet its production rate.**

The Contractor shall process the hazardous waste such that the material conforms with the requirements of the selected treatment/disposal facility, including but not limited to specified size and dimension. Refusal on the part of the treatment/disposal facility to accept said material solely on the basis of non-conformance of the material to the facility's physical requirements is the responsibility of the Contractor and no claim for extra work shall be accepted for reprocessing of said materials to meet these requirements.

All DOT shipping documents, including the Uniform Hazardous Waste Manifests utilized to accompany the transportation of the hazardous waste material shall be prepared by the Contractor and reviewed/signed by an authorized agent representing ConnDOT, as Generator, for each load of hazardous material that is packed to leave the site. The Contractor shall not sign manifests on behalf of the State as Generator. The Contractor shall forward the appropriate original copies of all manifests to the Engineer the same day the material leaves the Project site.

Materials not related to lead paint removal and/or characterized as non-hazardous waste shall NOT be shipped for hazardous waste disposal in accordance with USEPA RCRA hazardous waste minimization requirements.

A load-specific certificate of disposal, signed by the authorized agent representing the waste disposal facility, shall be obtained by the Contractor and promptly delivered to the Engineer for each load.

In addition to all pertinent Federal, State and local laws or regulatory agency polices, the Contractor shall adhere to the following precautions during the transport of hazardous materials off-site:

- All vehicles departing the site are to be properly logged to show the vehicle identification, driver's name, time of departure, destination, and approximate volume, and contents of materials carried. Vehicles shall display the proper USDOT placards for the type and quantity of waste;

- No materials shall leave the site unless a disposal facility willing to accept all of the material being transported has agreed to accept the type and quantity of waste;

- Documentation must be maintained indicating that all applicable laws have been satisfied and that the materials have been successfully transported and received at the disposal facility; and,

- The Contractor shall segregate the waste streams (i.e. concrete, wood, etc.) as directed by the receiving disposal facility.

Any spillage of debris during disposal operations during loading, transport and unloading shall be cleaned up in accordance with EPA 40 CFR 265 Subparts C & D, at the Contractor's expense.

The Contractor is liable for any fines, costs or remediation costs incurred as a result of their failure to be in compliance with this Item and all Federal, State and Local laws.

K. Project Closeout Data:

Provide the Engineer, within thirty (30) days of completion of the project site work, a compliance package; which shall include, but not be limited to, the following:

1. Competent persons (supervisor) job log;
2. OSHA-compliant personnel air sampling data;
3. Completed waste shipment papers for non-hazardous lead construction and demolition (C&D) waste disposal or recycling and scrap metal recycling.
4. Copies of completed Hazardous Waste Manifests (signed by authorized disposal facility representative).

Method of Measurement:

The completed work shall be paid as a lump sum. This item will include all noted services, equipment, facilities, testing and other associated work for up to three (3) ConnDOT project representatives. Services provided to any ConnDOT project representatives in excess of three (3) representatives will be measured for payment in accordance with Article 1.09.04 – "Extra and Cost-Plus Work."

Basis of Payment:

The lump sum price bid for this item shall include: services, materials, equipment, all permits, notifications, submittals, personal air sampling, personal protection equipment, temporary enclosures, incidentals, fees and labor incidental to activities impacting lead removal, treatment and handling of lead contaminated materials, and the transport and disposal of any hazardous and/or non-hazardous lead construction and demolition (C&D) bulky waste.

Final payment will not be made until all project closeout data submittals have been completed and provided to the Engineer. Once the completed package has been received in its entirety and accepted by the Engineer, final payment will be made to the Contractor.

Pay Item	Pay Unit
Lead Compliance for Miscellaneous Exterior Tasks	Lump Sum

END OF SECTION

ITEM #0062680A - TACTILE WARNING STRIP

0.62.01 - Description: This item shall include furnishing and installing Tactile Warning Strip in the locations and to the dimensions and details shown on the plans or as ordered by the Engineer. Work under this item shall also include saw-cutting and milling of the concrete platform for installation of the tactile warning strip, as shown on the plans.

0.62.02 – Materials: The Tactile Warning Strip shall be a prefabricated detectable warning surface tile chosen from the Department's Qualified Products Lists. The tile shall conform to the dimensions shown on the plans and have a solid homogeneous color throughout in compliance with MNR Standards or approved equal.

0.62.03 – Construction Methods: The Tactile Warning Strip shall be installed according to the plans and all Manufacturers requirements for environmental conditions, site preparations, installation procedures, curing procedures, and material compatibility.

The detectable warning strip shall be installed 4" from the edge of concrete platform along the full length of the platform as shown on the plans.

The Contractor is responsible for removing any material spatters or debris and repairing any damage to the existing platforms arising from the installation of the tile.

0.62.04 - Method of Measurement: The Tactile Warning Strip shall be measured for payment by the number of linear feet of tactile warning strip installed and accepted in the finished structure.

0.62.05 – Basis of Payment: Installation of the tactile warning strip shall be paid for at the contract unit price per linear foot of "Tactile Warning Strip" complete in place. This price shall include all saw cutting concrete, cleaning, adhesive, drilling holes for fasteners, fasteners, materials, equipment, tools and labor incidental thereto.

Pay Item	Pay Unit
Tactile Warning Strip	L.F.

ITEM #0063521A – RAIL FACILITY UPGRADE (SITE NO. 1)

0.63.01 Description: Under this item, the Contractor shall complete all work associated with the upgrade of the rail facilities at Site No. 1, as depicted on the Contract Plans and described in the CSI-formatted Specifications that make up this Major Lump Sum Item (MLSI). Refer to Form 816 Article 1.20-1.02.04 for additional information.

Any work incidental to another bid item which is not specifically described or included in the bid item, but which is required for performance and completion of the work required under the Contract at Site No. 1, shall be considered to be included under this item for the respective site.

0.63.02 Materials: All materials shall be as required by the Contract Plans and as described in the CSI-formatted Specifications that make up this MLSI unless noted otherwise. Structural steel framing and anchorages for the shelter systems including all columns, and rafters shall conform to Article 6.03.02-Structural Steel-Materials of Form 816.

0.63.03 Construction Methods: All methods of construction shall conform to the requirements as stipulated in the CSI-formatted Specifications that make up this MLSI; Standard Specifications Form 816; and the special provisions, as applicable.

0.63.04 Method of Measurement: This item, being paid for on a lump sum basis per site, will not be measured for payment.

0.63.05 Basis of Payment: This work will be paid for at the contract lump sum price per site for "RAIL FACILITY UPGRADE SITE NO. 1", complete, accepted in place, which price shall include all administrative and procedural requirements, material, equipment, labor and work incidental to the fabrication and construction of the rail facility upgrades at Site No. 1.

Pay Item	Pay Unit
Rail Facility Upgrade	L.S.

ITEM #0090061A - ERECTION / REMOVAL CYCLE - BRIDGE PLATE

Description: Work under this item consists of furnishing, erecting, maintaining and removing Bridge Plates, as shown on the plans, for continuous track outages at station platforms.

Work shall include the installation of new ground supports for 14'-wide bridge plates at CosCob, Riverside, and Old Greenwich Stations.

The quantity of bridge plates, to be picked up and delivered to the above stations by the Contractor, are estimated as follows:

16 ea. - 8' Wide Bridge Plates
16 ea. – 14' Wide Bridge Plates

All bridge plates are required to be in-service during the continuous track outages on Tracks 3 and 4.

Materials: Bridge Plates are comprised of lightweight components and include detachable handrails. The Bridge plates are designed for a live load of 60 pounds per square foot and a concentrated vertical load of 300 lbs applied evenly over a one square foot area to any part of the bridge plate. Bridge Plates are designed such that they are wheelchair accommodating. Dimensions are as shown on the plans. Railings have top and middle rail, smooth and free of all burrs, projections and cracks and be made detachable by removing six 2 1/2" long, quick release lock pins. Railing are designed for a minimum of 50 lbs./lf transversely and vertically acting simultaneously on each longitudinal member. A spare pair of lock pins shall be included with each set of handrails. Handrails are supported by 6 sockets on the ramp curbs. The ramp structure consists of safety curbs, slip resistant deck, non-skid approach and lip. All exposed surfaces shall be checked for finish and free of any course or jagged edges. The main deck of the bridge plates are slip resistant.

The Bridge Plates provided come with adjustable support legs to match the station platform height within 3/16" and have been designed to prevent sway in either direction from dynamic loads, when installed as shown on the plans. The legs are adjustable and designed to match existing bridge plate ground supports. Where no bridge plate ground supports are presently in place, the Contractor shall supply the necessary materials and install suitable ground supports.

The design of the Bridge Plates are such that they may readily and quickly be removed and stored off-track in an area designated by the Engineer and MNRR. The construction of the Bridge Plates are sufficiently rigid to allow repeated moves over the duration of the construction period and provide safe access of passengers between train and platform.

Submittals: Existing shop drawings for 8' wide bridge plates and 14' wide bridge plates stamped by a Connecticut licensed Professional Engineer, will be made available to the

contractor. The shop drawings show details of components of the platform, connections and methods of anchorage to the ground supports.

Construction Methods: At all stations, Bridge Plates shall be installed to accommodate trains in numbers indicated on the plans and at a spacing matching the doors on the MU-cars.

The Bridge Plates shall be placed to maintain 3" of clearance between the ends of the platform and a point 5'-8" from the centerline of the track being serviced. The Bridge Plates shall be anchored firmly in place immediately after positioning. The Contractor may be required to relocate existing ground supports as necessary to achieve proper alignment. All layout of the Bridge Plates shall be performed by the Contractor and approved by the Engineer and MNRR prior to installation.

The Contractor shall maintain the Bridge Plates and the ground supports in a safe and useable condition at all times. The Contractor shall perform snow and ice removal.

Bridge plates are to be installed or removed during a weekend off-peak night outage. All Bridge Plates at all locations are to be completely installed or removed during the outage. The staging plans indicate the periods when Track 3 & 4 outages occur that require the installation and removal cycles to take place.

The Contractor is responsible for measuring track centers, platform heights and track heights at each bridge plate location to ensure that the bridge plates are erected and installed correctly.

The Contractor is responsible for pick-up and delivery of Railroad supplied bridge plates from a site designated by the Railroad. The bridge plates are located at the Metro-North Railroad (MNRR) Port Chester Yard in New York. The Contractor is required to deliver them to the above noted stations to staging locations determined by the Engineer and MNRR. At the completion of the Project or when the Bridge Plates are no longer needed, they shall be turned-over to the Railroad in good condition and transported to the Port Chester Rail Yard in New York.

Method of Measurement: Erection and Removal of Bridge Plates shall be measured for payment by the number of cycles carried out by the Contractor and paid for as ERECTION/REMOVAL CYCLE – BRIDGE PLATES. One cycle is defined as the erection and removal of a single bridge plate, regardless of width. Erection or removal of bridge plates during continuous track outages for the Contractor's convenience shall not be paid separately, but the cost thereof shall be included in the item for ERECTION/REMOVAL CYCLE – BRIDGE PLATES.

There shall be no separate payment for maintenance, snow removal or final return of Bridge Plates to the rail yard, but the cost thereof shall be included in the unit price for ERECTION/REMOVAL CYCLE – BRIDGE PLATES.

There shall be no separate payment for the installation of new bridge plate ground supports, but the cost thereof shall be included in the unit price for ERECTION/REMOVAL CYCLE – BRIDGE PLATES.

There shall be no separate payment for the relocation of existing bridge plate ground supports, but the cost thereof shall be included in the unit price for ERECTION/REMOVAL CYCLE – BRIDGE PLATES.

There shall be no separate payment for pick-up and delivery of Railroad supplied bridge plates, but the cost thereof shall be included in the unit price for ERECTION/REMOVAL CYCLE - BRIDGE PLATES.

Basis for Payment: This work will be paid for at the contract unit price for the following pay item which prices shall include all transportation, materials, equipment, tools and labor incidental thereto:

Pay Item	**Pay Unit**
ERECTION / REMOVAL CYCLE - BRIDGE PLATES	EA

ITEM #0100500A - CONSTRUCTION COMMUNICATION EQUIPMENT

1.00.01 - Description: The Contractor shall provide authorized radio communication equipment for use by inspection personnel. This item shall include all necessary equipment, accessories, material and labor to put the system into operation. Provisions shall also be made to maintain all provided communication equipment and any additional communication equipment assigned to the project by the Department, as directed by the Engineer.

1.00.02 - Materials: The equipment for this item shall conform to the following: A hand-held cellular phone capable of communicating digitally between units with two-way feature. In addition, the phones shall have the ability to send and receive text and numeric messaging, voice mail, caller ID and call waiting. No other options or features will be required and, if provided, will be at no additional expense to the Department.

The service shall be provided and maintained until the notice of completion date of the contract or as directed by the Engineer.

1.00.03 - Construction Methods: The Contractor shall submit three (3) proposals for the communication described herein and forward to the Engineer for approval. The estimated quantity of phones required for inspection personnel is three (3) phones. The Department reserves the right to adjust this number accordingly.

The three proposals may be for either rental or purchase of equipment that is new or of like-new condition and meeting the specification requirements. Also, the three proposals must indicate the minimum and maximum number of phones that will be allotted. The Engineer will have ten (10) days from receipt of the proposal to inform the Contractor of its selection. Once approved, the contractor shall order the equipment, and have it installed and operating within fifteen (15) working days.

The Contractor will furnish to the State, a copy of the monthly call record for each phone when submitting the billing invoices for the communication equipment.

All equipment and associated materials will remain the property of the Contractor upon completion of the project unless otherwise specified by the Engineer in writing.

1.00.04 - Method of Measurement: The item, “Construction Communication Equipment”, will be measured for payment under Article 1.09.04 Extra and Cost Plus Work.

The sum of money shown on the estimate and in the itemized proposal as “Estimated Cost” for this work will be considered the bid price although will be made only for actual cost of equipment, materials, accessories and labor. The estimated cost figure is not to be altered in any manner by the bidder. If the bidder alters the amount shown, the altered figures will be disregarded, and the original price will be used to determine the total bid for the contract.

1.00.05 - Basis of Payment: The item "Construction Communication Equipment", will be paid for in accordance with Article 1.09.04 (b) Specialized Work.

Pay Item	Pay Unit
Construction Communication Equipment	EST.

ITEM #0100600A - CONSTRUCTION ACCESS

Description: This item consists of all work shown on the plans, contained herein or as directed by the Engineer to provide the Contractor with access to the railroad tracks at the existing locations noted herein.

This work includes, but is not limited to the following:

Furnish and install chain link fence and access gates (6' high or as directed by the Engineer). Access gates shall be 6' high – 12' wide, or as indicated on the plan sheets. Locks to be furnished by MNR and installed by the Contractor, as directed by the Engineer.

Construct temporary access drives, ramps up to on-track access pads and anti-tracking pads at points of vehicular ingress and egress, as shown on the plans or as directed by the Engineer. Includes the removal of topsoil and unsuitable materials from under the areas that access roads are installed, as determined by the Engineer.

Remove trees, stumps, brush, dirt and debris, rails, ties, asphalt road curbing and excavated top soil required for the installation of access roads, ramps, fencing and gates, as required and shown on the plans.

Furnish and install construction signs to delineate the area used for access and to notify the public and city or town officials of parking restrictions, as directed by the Engineer.

The access areas, gates and improvements shall remain at the end of the project.

All work incidental to providing the Contractor access at these locations and maintaining these locations during construction.

Includes the installation of temporary safety walkways, guardrails, temporary fencing as shown on the plans.

Includes providing ballast or crushed stone between right-of-way and access pads, as well as between access pads on adjacent tracks.

The rubber access pads for the railroad tracks on concrete or wood ties shall be furnished by the Contractor and installed by the Railroad. Access pads for concrete or wood ties are paid separately under the item "RUBBER GRADE CROSSING"

Materials: Materials shall conform to Form 816 and the latest supplemental specifications, as follows:

- 6’ Chain Link Fence shall conform to Section 9.13
- Anti-Tracking Pad Stone shall conform to Article M.01, Size No. 3
- Geotextile shall conform to Article M.08.01-26.
- Clearing and Grubbing shall conform to Section 2.01
- Haybales and Temporary Seeding of Disturbed Slopes shall conform to Section 2.10
- Construction Signs shall conform to section 12.20
- Rolled Granular Base – Section 3.02

Construction Methods: The Contractor shall not disturb the normal flow of traffic at the Riverside or Old Greenwich Stations when he is constructing or using access points. The Contractor shall not use the access point at the stations during the peak commuter hours, if in the opinion of the Engineer, a delay will result to commuters due to the Contractor’s operations.

The access points are for the Contractor’s use to provide access to the tracks with hi-rail equipment, materials or personnel. The access points shall not be used to store equipment or materials, except as approved by the Engineer. The Contractor will not be permitted to remove any parking spaces, except at entrance gates, or as otherwise noted on the construction access plans. The Contractor shall keep the access point gates secure at all times to keep the public and unauthorized vehicles from entering the railroad tracks.

Construction methods shall conform to the appropriate Form 816 items as listed above, under Materials, and also with Section 1.05.06 – Coordination with Utilities (including Railroads) contained elsewhere in the special provision specifications.

Construction methods for anti-tracking pads shall conform to the following and the details contained herein:

1. Construction. The area of the construction entrance shall be cleared of all vegetation, roots and other organic or unsuitable material. The subgrade in the area of the pad shall be graded to drain and the area shall be covered with geotextile fabric.
A 6-inch thick pad of stone shall be placed on the geotextile. The pad shall have a minimum width of 15 feet and a length as directed by the Engineer.

2. Maintenance. The anti-tracking pad shall be maintained in a condition that will prevent tracking or flowing of sediment onto public rights-of-way. Stone shall be added, dressed and cleaned as required. All sediment spilled, dropped washed or tracked onto public rights-of-way shall be removed immediately.

3. Completion. When the construction entrance is no longer needed by the Contractor, or upon project completion, the anti-tracking pad shall be cleaned one last time in its entirety and left in place. The pad materials and sediments from the final cleaning shall be removed to a location approved by the Engineer. All fencing and gates are to remain. Any fencing and gates that are

damaged are to be repaired or replaced as determined by the Engineer and the cost included as part of this item.

The Contractor shall not damage existing parking lots. The Contractor, at no expense to the State, shall immediately repair any damage, which results to the parking lot or public streets as a result of the Contractor's operations to the State.

The existing access roads shall be reconstructed of processed stone, and rolled. All top soil and unsuitable materials shall be removed from under the areas that access roads are installed and/or reconstructed.

Refer to the item RUBBER GRADE CROSSING for details regarding the access pad locations and the roadway approaches leading to those pads.

Method of Measurement: All work for the construction of the access points described herein, shall be included in the lump sum cost of this item.

Procurement of access pads for use on concrete or wood ties shall be paid for separately under the item RUBBER GRADE CROSSING.

There shall be no separate payment for materials, labor, and equipment required for the maintenance, re-grading and repair of access roads, access ramps, metal beam guardrail, chain link fencing, and gates, but the cost thereof shall be included in the lump sum price of CONSTRUCTION ACCESS.

There shall be no separate payment for materials, labor, and equipment required for removal or disposal of debris, vegetation, tree trimmings, rails, ties, curbing, and excavated top soil, but the cost thereof shall be included in the lump sum price of CONSTRUCTION ACCESS.

There shall be no separate payment for materials, labor and equipment required for the anchoring of chain link fence and metal beam guardrail into the existing stone retaining walls, but the cost thereof shall be included in the lump sum price of CONSTRUCTION ACCESS.

Any areas in addition to those shown on the plans that the Contractor chooses to obtain for his convenience or access points which the contractor chooses to install for his convenience, other than those shown on the plans, shall be temporary easements, and/or leases from the property owners whose property it is intended to traverse, or occupy, if any. The Contractor shall restore, at his own expense, any landscaping or adjacent property damaged, or other damage caused by his operations, to the satisfaction of the Engineer and the property owner. There will be no separate payment for these additional areas or access points but the cost thereof shall be included in the lump sum for Construction Access.

Basis of Payment: This work will be paid for on a lump sum basis for CONSTRUCTION ACCESS, which shall include all work shown on the plans and/or or as described herein.

Pay Item	**Pay Unit**
CONSTRUCTION ACCESS	LS

ANTI - TRACKING PAD

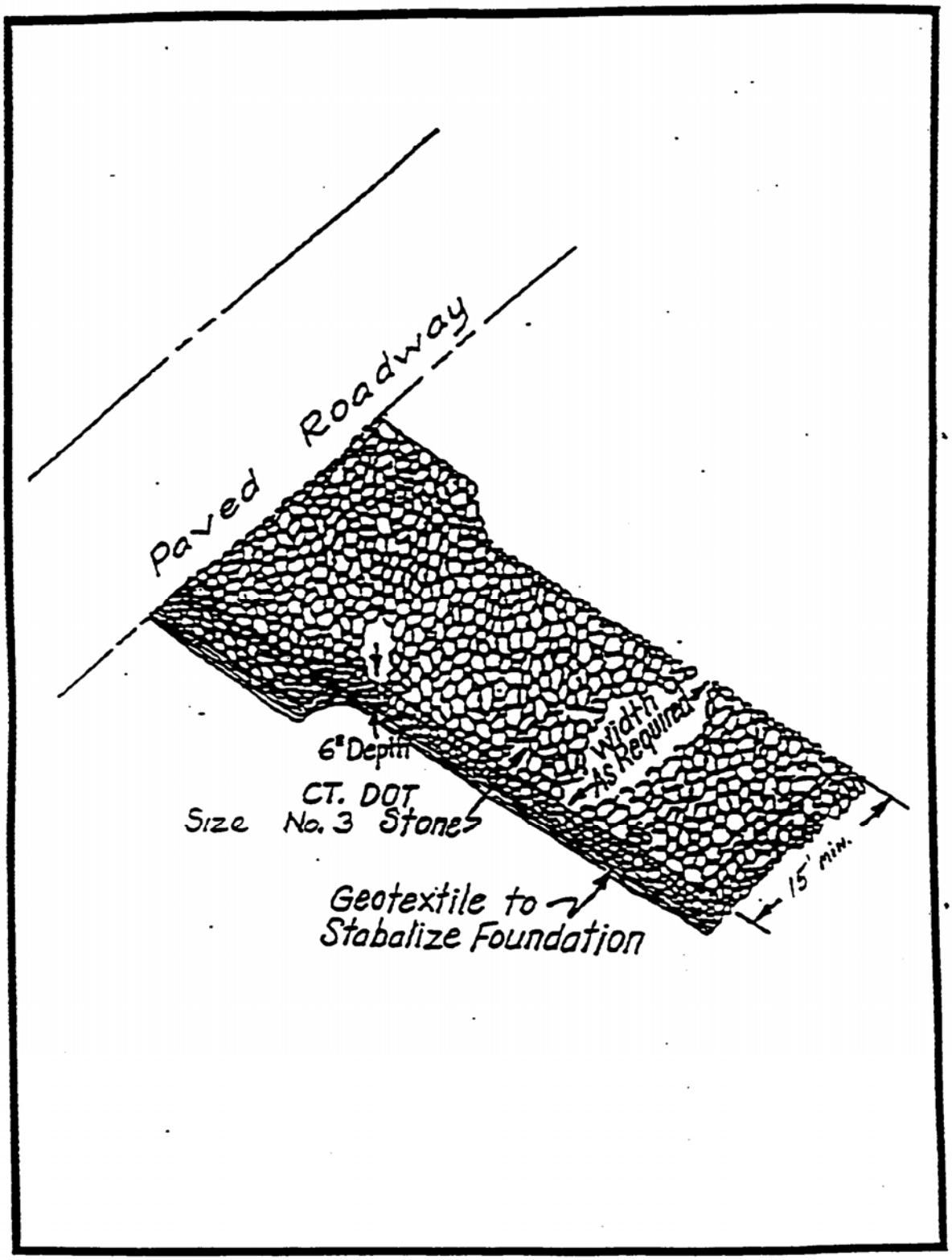

ITEM #0101000A – ENVIRONMENTAL HEALTH AND SAFETY

Description:

Under this Item, the Contractor shall establish protocols and provide procedures to protect the health and safety of its employees and subcontractors as related to the proposed construction activities performed within the Project Areas of Environmental Concerns (AOECs). Work under this Item consists of the development and implementation of a written site-specific Health and Safety Plan (HASP) that addresses the relative risk of exposure to documented hazards present within Project limits. The HASP shall establish health and safety protocols that address the relative risk of exposure to regulated substances in accordance with 29 CFR 1910.120 and 29 CFR 1926.65. Such protocols shall only address those concerns directly related to site conditions.

Note: The Engineer will prepare a site-specific health and safety plan which is compatible with the Contractor's plan and will be responsible for the health and safety of all Project Inspectors, Department employees and consulting engineers.

Materials:

The Contractor must provide chemical protective clothing (CPC) and personal protective equipment (PPE) as stipulated in the Contractor's HASP during the performance of work in areas identified as potentially posing a risk to worker health and safety for workers employed by the Contractor and all subcontractors.

Construction Methods:

1-Existing Information: The Contractor shall utilize all available information and existing records and data pertaining to chemical and physical hazards associated with any of the regulated substances identified in the environmental site investigations to develop the HASP. A list of documents containing this data is found in "Notice to Contractor – Environmental Investigations".

2-General: The requirements set forth herein pertain to the provision of workers' health and safety as it relates to proposed Project activities when performed in the presence of hazardous or regulated materials or otherwise environmentally sensitive conditions. THE PROVISION OF WORKER HEALTH AND SAFETY PROTOCOLS WHICH ADDRESS POTENTIAL AND/ OR ACTUAL RISK OF EXPOSURE TO SITE SPECIFIC HAZARDS POSED TO CONTRACTOR EMPLOYEES IS SOLELY THE RESPONSIBILITY OF THE CONTRACTOR.

The Contractor shall be responsible for the development, implementation and oversight of the HASP throughout the performance of work within the limits of the AOECs, as identified in the Contract Documents, and in other areas identified by the Engineer or by the HASP where site

conditions may pose a risk to worker health and safety and/or the environment. **No physical aspects of the work within the AOEC shall begin until the HASP is reviewed by the Engineer and is determined to meet the requirements of the specifications. However, the Contract time, in accordance with Article 1.03.08, will begin on the date stipulated in the Notice to Proceed.**

3-Regulatory Requirements: All construction related activities performed by the Contractor within the limits of the AOECs or in other areas where site conditions may pose a risk to worker health and safety and/or the environment shall be performed in conformance with 29 CFR 1926, Safety and Health Regulations for Construction and 29 CFR 1910, Safety and Health Regulations for General Industry. Conformance to 29 CFR 1910.120, Hazardous Waste Site Operations and Emergency Response (HAZWOPER) may also be required, where appropriate.
4-Submittals: Three copies of the HASP shall be submitted to the Engineer within four (4) weeks after the Award of Contract or four (4) weeks prior to the start of any work in the AOEC, whichever is first, but not before the Award of the Contract. The HASP shall include copies of the Contractor-designated Health and Safety Officer's (HSO) training certificates as well as a demonstration of the required experience, as indicated in Section 5-HASP Provisions (b) (iii) of this Item.

The HASP shall be developed by a qualified person designated by the Contractor. This qualified person shall be a Certified Industrial Hygienist (CIH), Certified Hazardous Material Manager (CHMM), or a Certified Safety Professional (CSP). He/she shall have review and approval authority over the HASP and be identified as the Health and Safety Manager (HSM). The HASP shall bear the signature of said HSM indicating that the HASP meets the minimum requirements of 29 CFR 1910.120 and 29 CFR 1926.65.

The Engineer will review the HASP within four (4) weeks of submittal and provide written comments as to deficiencies in and/or exceptions to the plan, if any, to assure consistency with the specifications, applicable standards, policies and practices, and appropriateness given potential or known site conditions. Items identified in the HASP which do not conform to the specifications will be brought to the attention of the Contractor, and the Contractor shall revise the HASP to correct the deficiencies and resubmit it to the Engineer for determination of compliance with this Item. The Contractor shall not be allowed to commence work activities in the AOEC(s), as shown on the Plans, or where site conditions exist which may pose a risk to worker health and safety and/or the environment, until the HASP has been reviewed and accepted by the Engineer. No claim for delay in the progress of work will be considered for the Contractor's failure to submit a HASP that conforms to the requirements of the Contract.

5-HASP Provisions:

(a) General Requirements: The Contractor shall prepare a HASP covering all Project site work regulated by 29 CFR 1910.120(b)/1926.65(b) to be performed by the Contractor and all subcontractors under this Contract. The HASP shall establish in detail, the protocols necessary for the recognition, evaluation, and control of all hazards associated with each task performed under this Contract. The HASP shall address site-specific

safety and health hazards of each phase of site operation and include the requirements and procedures for employee protection. The level of detail provided in the HASP shall be tailored to the type of work, complexity of operations to be performed, and hazards anticipated. Details about some activities may not be available when the initial HASP is prepared and submitted. Therefore, the HASP shall address, in as much detail as possible, all anticipated tasks, their related hazards and anticipated control measures.

The HASP shall interface with the Contractor's Safety and Health Program. Any portions of the Safety and Health Program that are referenced in the HASP shall be included as appendices to the HASP. All topics regulated by the 29 CFR 1910.120(b)(4) and those listed below shall be addressed in the HASP. Where the use of a specific topic is not applicable to the Project, the HASP shall include a statement to justify its omission or reduced level of detail and establish that adequate consideration was given the topic.

(b) Elements:

(i) Site Description and Contamination Characterization: The Contractor shall provide a site description and contaminant characterization in the HASP that meets the requirements of 29 CFR 1910.120/1926.65.

(ii) Safety and Health Risk Analysis/Activity Hazard Analysis: The HASP shall address the safety and health hazards on this site for every operation to be performed. The Contractor shall review existing records and data to identify potential chemical and physical hazards associated with the site and shall evaluate their impact on field operations. Sources, concentrations (if known), potential exposure pathways, and other factors as noted in CFR 1910.120/126.65, paragraph (c)(7) employed to assess risk shall be described. The Contractor shall develop and justify action levels for implementation of engineering controls and PPE upgrades and downgrades for controlling worker exposure to the identified hazards. If there is no permissible exposure limit (PEL) or published exposure level for an identified hazard, available information from other published studies may be used as guidance. Any modification of an established PEL must be fully documented.

The HASP shall include a comprehensive section that discusses the tasks and objectives of the site operations and logistics and resources required to complete each task. The hazards associated with each task shall be identified. Hazard prevention techniques, procedures, and/or equipment shall be identified to mitigate each of the hazards identified.

(iii) Staff Organization, Qualifications and Responsibilities: The HASP shall include a list of personnel expected to be engaged in site activities and certify that said personnel have completed the educational requirements stipulated in 29 CFR 1910.120 and 29 CFR 1926.65, are currently monitored under a medical surveillance program in compliance with those regulations, and that they are fit for work under "level C" conditions.

The Contractor shall assign responsibilities for safety activities and procedures. An outline or flow chart of the safety chain of command shall be provided in the HASP. Qualifications, including education, experience, certifications, and training in safety and health for all personnel engaged in safety and health functions shall be documented in the HASP. Specific duties of each on-site team member should be identified. Typical team members include but are not limited to Team Leader, Scientific Advisor, Site Safety Officer, Public Information Officer, Security Officer, Record Keeper, Financial Officer, Field Team Leader, and Field Team members.

The HASP shall also include the name and qualifications of the individual proposed to serve as Health and Safety Officer (HSO). The HSO shall have full authority to carry out and ensure compliance with the HASP. The Contractor shall provide a competent HSO on-site who is capable of identifying existing and potential hazards in the surroundings or working conditions which are unsanitary, hazardous, or dangerous to employees and who has authorization to take prompt corrective measures to eliminate or control them. The qualifications of the HSO shall include completion of OSHA 40-hour HAZWOPER training (including current 8-hour refresher training); 8-hour HAZWOPER supervisory training; a minimum of one (1) year of working experience with the regulated compounds that have been documented to exist within Project limits; a working knowledge of Federal and State safety regulations; specialized training or documented experience (one (1) year minimum) in personal and respiratory protective equipment program implementation; the proper use of air monitoring instruments, air sampling methods, and procedures; and certification training in first aid and CPR by a recognized, approved organization such as the American Red Cross.

The primary duties of the HSO shall be those associated with worker health and safety. The Contractor's HSO responsibilities shall be detailed in the written HASP and shall include, but not be limited to the following:

(A) Directing and implementing the HASP.

(B) Ensuring that all Project personnel have been adequately trained in the recognition and avoidance of unsafe conditions and the regulations applicable to the work environment to control or eliminate any hazards or other exposure to illness or injury (29 CFR 1926.21). All personnel shall be adequately trained in procedures outlined in the Contractor's written HASP.

(C) Authorizing Stop Work Orders, which shall be executed upon the determination of an imminent health and safety concern.

(D) Contacting the Contractor's HSM and the Engineer immediately upon the issuance of a Stop Work order when the HSO has made the determination of an imminent health and safety concern.

(E) Authorizing work to resume, upon approval from the Contractor's HSM.

(F) Directing activities, as defined in the Contractor's written HASP, during

emergency situations; and

(G) Providing personal monitoring where applicable and as identified in the HASP.

(iv) Employee Training Assignments: The Contractor shall develop a training program to inform employees, supplier's representatives, and official visitors of the special hazards and procedures (including PPE, its uses and inspections) to control these hazards during field operations. Official visitors include but are not limited to Federal Agency Representatives, State Agency Representatives, Municipal Agency Representatives, Contractors, subcontractors, etc. This program shall be consistent with the requirements of 29 CFR 1910.120 and 29 CFR 1926.65.

(v) Personal Protective Equipment: The plan shall include the requirements and procedures for employee protection and should include a detailed section on respiratory protection. The Contractor shall describe in detail and provide appropriate PPE to insure that workers are not exposed to levels greater than the action level for identified hazards for each operation stated for each work zone. The level of protection shall be specific for each operation and shall be in compliance with all requirements of 29 CFR 1910 and 29 CFR 1926. The Contractor shall provide, maintain, and properly dispose of all PPE.

(vi) Medical Surveillance Program: All on-site Contractor personnel engaged in 29 CFR 1910.120/1926.65 operations shall have medical examinations meeting the requirements of 29 CFR 1910.120(f) prior to commencement of work.

The HASP shall include certification of medical evaluation and clearance by the physician for each employee engaged in 29 CFR 1910.120/1926.65 operations at the site.

(vii) Exposure Monitoring/Air Sampling Program: The Contractor shall submit an Air Monitoring Plan as part of the HASP which is consistent with 29 CFR 1910.120, paragraphs (b)(4)(ii)(E), (c)(6), and (h). The Contractor shall identify specific air sampling equipment, locations, and frequencies in the air-monitoring plan. Air and exposure monitoring requirements shall be specified in the Contractor's HASP. The Contractor's CIH shall specify exposure monitoring/air sampling requirements after a careful review of the contaminants of concern and planned site activities.

(viii) Site Layout and Control: The HASP shall include a map, work zone delineation (support, contamination, reduction, and exclusion), on/off-site communications, site access controls, and security (physical and procedural).

(ix) Communications: Written procedures for routine and emergency communications procedures shall be included in the Contractor's HASP.

(x) Personal Hygiene, Personal Decontamination and Equipment Decontamination: Decontamination facilities and procedures for PPE, sampling equipment, and heavy equipment shall be discussed in detail in the HASP.

(xi) Emergency Equipment and First Aid Requirements: The Contractor shall provide appropriate emergency first aid kits and equipment suitable to treat exposure to the hazards identified, including chemical agents. The Contractor will provide personnel that have certified first aid/CPR training on-site at all times during site operations.

(xii) Emergency Response Plan and Spill Containment Program: The Contractor shall establish procedures in order to take emergency action in the event of immediate hazards (i.e., a chemical agent leak or spill, fire or personal injury). Personnel and facilities supplying support in emergency procedures will be identified. The emergency equipment to be present on-site and the Emergency Response Plan (ERP) procedures, as required by 29 CFR 1910.120, paragraph (1)(1)(ii) shall be specified in the ERP. The ERP shall be included as part of the HASP. This ERP shall include written directions to the closest hospital as well as a map showing the route to the hospital.

(xiii) Logs, Reports and Record Keeping: The Contractor shall maintain safety inspections, logs, and reports, accident/incident reports, medical certifications, training logs, monitoring results, etc. All exposure and medical monitoring records are to be maintained according to 29 CFR 1910 and 29 CFR 1926. The format of these logs and reports shall be developed by the Contractor to include training logs, daily logs, weekly reports, safety meetings, medical surveillance records, and a phase-out report. These logs, records, and reports shall be maintained by the Contractor and be made available to the Engineer.

The Contractor shall immediately notify the Engineer of any accident/incident. Within two working days of any reportable accident, the Contractor shall complete and submit to the Engineer an accident report.

(xiv) Confined space entry procedures: Confined space entry procedures, both permit required and non permit required, shall be discussed in detail.

(xv) Pre-entry briefings: The HASP shall provide for pre-entry briefings to be held prior to initiating any site activity and at such other times as necessary to ensure that employees are apprised of the HASP and that this plan is being followed.

(xvi) Inspections/audits: The HSM or HSO shall conduct inspections or audits to determine the effectiveness of the HASP. The Contractor shall correct any deficiencies in the effectiveness of the HASP.

6-HASP Implementation: The Contractor shall implement and maintain the HASP throughout the performance of work. In areas identified as having a potential risk to worker health and safety, and in any other areas deemed appropriate by the HSO, the Contractor shall be prepared

to immediately implement the appropriate health and safety measures, including but not limited to the use of PPE, and engineering and administrative controls.

If the Engineer observes deficiencies in the Contractor's operations with respect to the HASP, they shall be assembled in a written field directive and given to the Contractor. The Contractor shall immediately correct the deficiencies and respond, in writing, as to how each was corrected. Failure to bring the work area(s) and implementation procedures into compliance will result in a Stop Work Order and a written directive to discuss an appropriate resolution(s) to the matter. When the Contractor demonstrates compliance, the Engineer shall remove the Stop Work Order. If a Stop Work Order has been issued for cause, no delay claims on the part of the Contractor will be honored.

Disposable CPC/PPE, i.e. disposable coveralls, gloves, etc., which come in direct contact with hazardous or potentially hazardous material shall be placed into 55-gallon USDOT 17-H drums and disposed of in accordance with Federal, State, and local regulations. The drums shall be temporarily staged and secured at a location chosen by the Engineer until the material is appropriately disposed.

7-HASP Revisions: The HASP shall be maintained on-site by the Contractor and shall be kept current with construction activities and site conditions under this Contract. The HASP shall be recognized as a flexible document which shall be subject to revisions and amendments, as required, in response to actual site conditions, changes in work methods and/or alterations in the relative risk present. All changes and modifications shall be signed by the Contractor's HSM and shall require the review and acceptance by the Engineer prior to the implementation of such changes.

Should any unforeseen hazard become evident during the performance of the work, the HSO shall bring such hazard to the attention of the Contractor and the Engineer as soon as possible. In the interim, the Contractor shall take action, including Stop Work Orders and/or upgrading PPE as necessary to re-establish and maintain safe working conditions and to safeguard on-site personnel, visitors, the public, and the environment. The HASP shall then be revised/amended to reflect the changed condition.

Method of Measurement:

1-Within thirty (30) calendar days of the award of the Contract, the Contractor shall submit to the Engineer for acceptance a breakdown of its lump sum bid price for this Item detailing:

(a) The development costs associated with preparing the HASP in accordance with these Specifications.
(b) The cost per month for the duration of the Project to implement the HASP and provide the services of the HSM and the HSO.

2-If the lump sum bid price breakdown is unacceptable to the Engineer; substantiation showing that the submitted costs are reasonable shall be required.

3-Upon acceptance of the payment schedule by the Engineer, payments for work performed will be made as follows:

(a) The lump sum development cost will be certified for payment.

(b) The Contractor shall demonstrate to the Engineer monthly that the HASP has been kept current and is being implemented and the monthly cost will be certified for payment.

(c) Any month where the HASP is found not to be current or is not being implemented, the monthly payment for the Environmental Health and Safety Item shall be deferred to the next monthly payment estimate. If the HASP is not current or being implemented for more than thirty (30) calendar days, there will be no monthly payment.

(d) Failure of the Contractor to implement the HASP in accordance with this Specification shall result in the withholding of all Contract payments.

Basis of Payment:

This work will be paid for at the Contract lump sum price for "Environmental Health and Safety" which price shall include all materials, tools, equipment, and labor incidental to the completion of this Item for the duration of the Project to maintain, revise, monitor, and implement the HASP. Such costs include providing the services of the HSM and HSO, Contractor employee training, chemical protective clothing (CPC), personal protective equipment (PPE), disposal of PPE and CPC, medical surveillance, decontamination facilities, engineering controls, monitoring, and all other HASP protocols and procedures established to protect the Health and Safety for all on-site workers.

Pay Item	Pay Unit
Environmental Health and Safety	L.S.

ITEM ~~#NO.~~ 0101133A – DISPOSAL OF CONTAMINATED RAILROAD TIES

Description:

Work under this Item shall consist of the transportation, and final off-site disposal/recycling/ treatment of contaminated railroad ties and contaminated timber members (excluding concrete), which have been generated from various excavations/demolition and determined to be contaminated with regulated substances at non-hazardous levels. Such railroad ties and timber members, after proper characterization by the Engineer, shall be loaded and transported directly to, and treated/recycled/disposed of, at a permitted treatment/recycle/disposal facility (TDRF) listed herein.

The Contractor must use the following Department-approved TDRFs for the disposal of non-hazardous contaminated railroad ties and timber members.

Allied Waste Niagara Falls Landfill, LLC 5600 Niagara Falls Blvd. Niagara, NY 14304 (716) 285-3344; David Hanson	Clean Harbors of Connecticut, Inc. 51 Broderick Road Bristol, CT 06010 (860) 583-8917; Glen Carlson
Environmental Quality Company – Wayne Disposal Facility 49350 North I-94 Service Drive Belleville, MI 48111 (734) 697-2200; Erin Gore	Moretown Landfill 187 Palisades Park Waterbury, VT 05676 (802) 244-1100; Tom Badowski

The above list contains TDRFs that can accept contaminated railroad ties and contaminated timber members generated by the Project in quantities limited by their permits and operational needs. In addition, some of these TDRFs may become unavailable during the duration of the Project. It is the responsibility of the Contractor to verify that a facility will be available and capable of handling the volume, as well as the chemical and physical characteristics of contaminated railroad ties and timber members generated by the Project. As such, the Contractor must factor in such possibilities.

Construction Methods:

A. Submittals

The apparent low bidder shall submit in writing within 14 days after bid opening the following:

1. The name(s) of the TDRF(s) (from the list above) which the Contractor intends to use to receive contaminated railroad ties and contaminated timber members from the Project;

Field Code Changed

2. A copy of the attached "Disposal Facility Material Acceptance Certification" form from each facility from the list above, which shall be signed by an authorized representative of each TDRF; and
3. A copy of the facility acceptance criteria and facility sampling frequency requirements from each TDRF.

Disposal of contaminated railroad ties and contaminated timber members shall only be made at a ConnDOT approved TDRF that is permitted to receive this type of waste. No facility may be substituted for the one(s) designated in the Contractor's submittal without the Engineer's prior approval. If the material cannot be accepted by any facilities from the list above, the Department will supply the Contractor with the name(s) of other acceptable facilities.

Field Code Changed

Rev. Date 9/12/13

Disposal Facility Materials Acceptance Certification

Project Number 301-0092

Project Location Rehabilitation of Two Metro-North RR Bridges (No. 03948R – Sound Beach Avenue & No. 03955R – Tomac Avenue), Greenwich, CT

Facility Name_____ Telephone_____

Facility Address_____ Fax_____

_____

_____

The Contractor has supplied the analytical data contained in the report concerning the site investigation performed by the Designer. I have personally reviewed this data and intend to accept the following contaminated materials as described in Item 0101113A – Disposal of Contaminated Railroad Ties.

This intent to accept the material will be subject to and dependent upon the facility's subsequent evaluation of waste characterization determination documentation to be provided to the Contractor by the Engineer.

Authorized Facility
Representative_____/_____
Printed/Typed Name Title

_____/_____
Signature Date

Note: The facility shall attach the acceptance criteria and facility sampling frequency requirements to this document.

DO NOT ALTER FORM IN ANY WAY. FORM MUST BE COMPLETED IN ENTIRETY.

Field Code Changed

B. Material Disposal

The Engineer shall sample the in-place contaminated railroad ties and contaminated timber members prior to the start of any work for waste characterization purposes. The Engineer will provide the Contractor with the waste characterization sampling results.

The Contractor shall obtain and complete all paperwork necessary to arrange for material disposal (such as disposal facility waste profile sheets). It is solely the Contractor's responsibility to coordinate the disposal of Controlled Materials with the selected TDRF(s). Upon receipt of the final approval from the facility, the Contractor shall arrange for the removal, loading, transport, and treatment/recycling/disposal of the materials in accordance with all Federal and State regulations.

The Contractor shall not begin removal of contaminated railroad ties and contaminated timber members until the selected disposal facility has indicated final approval of the materials for disposal. No claim will be considered based on the failure of the Contractor's TDRF(s) to meet the Contractor's production rate or for the Contractor's failure to select sufficient facilities to meet its production rate.

Any material processing (including, but not limited to, cutting and removal of steel or other non-wood components) required by the Contractor's selected facility will be completed by the Contractor prior to the material leaving the site. It is solely the Contractor's responsibility to meet any such requirements of its facility.

All manifests or bills of lading utilized to accompany the transportation of the material shall be prepared by the Contractor a minimum of 24 hours in advance and signed by an authorized Department representative, as Generator, for each truckload of material that leaves the site. The Contractor shall forward the appropriate original copies of all manifests or bills of lading to the Engineer the same day the material leaves the Project.

A load-specific certificate of treatment/recycling/disposal, signed by the authorized agent representing the disposal facility, shall be obtained by the Contractor and promptly delivered to the Engineer for each load.

C. Material Transportation

In addition to all pertinent Federal, State and local laws or regulatory agency polices, the Contractor shall adhere to the following precautions during the transport of contaminated railroad ties and contaminated timber members off-site:

1. Transported railroad ties and contaminated timber members are to be covered sufficiently to preclude the loss of material during transport prior to leaving the site and are to remain covered until the arrival at the selected TDRF;

Field Code Changed

2. All vehicles departing the site are to be properly logged to show the vehicle identification, driver's name, time of departure, destination, and approximate volume, and contents of materials carried;

3. No materials shall leave the site unless a treatment/recycling/disposal facility willing to accept all of the material being transported has agreed to accept the type and quantity of waste; and

4. Documentation must be maintained indicating that all applicable laws have been satisfied and that the materials have been successfully transported and received at the TDRF.

D. Equipment Decontamination

All equipment shall be provided to the work site free of gross contamination. The Engineer may prohibit from the site any equipment that in his opinion has not been thoroughly decontaminated prior to arrival. Any decontamination of the Contractor's equipment prior to arrival at the site shall be at the expense of the Contractor. The Contractor is prohibited from decontaminating equipment on the Project that has not been thoroughly decontaminated prior to arrival.

The Contractor shall furnish labor, materials, tools and equipment for decontamination of all equipment and supplies that are used to handle the contaminated railroad ties and contaminated timber members. Decontamination shall be conducted at an area designated by the Engineer and shall be required prior to equipment and supplies leaving the Project and/or between stages of the work.

The Contractor shall use dry decontamination procedures. Residuals from dry decontamination activities shall be collected and managed as contaminated materials. If the results from dry methods are unsatisfactory to the Engineer, the Contractor shall modify decontamination procedures as required.

The Contractor shall be responsible for the collection and treatment/recycling/disposal of any liquid and solid wastes that may be generated by its decontamination activities in accordance with applicable regulations.

Method of Measurement:

The work of "DISPOSAL OF CONTAMINATED RAILROAD TIES" will be measured for payment as the actual net weight in tons of contaminated railroad ties and contaminated timber members delivered to the TDRF. Such determinations shall be made by measuring each hauling vehicle on the certified permanent scales at the TDRF before and after unloading and subtracting the weight of the empty vehicle from the weight of the loaded vehicle. Total weight will be the summation of weight bills issued by the facility specific to this Project. Excess excavations made by the Contractor beyond the payment limits specified in Specification Sections 2.02, 2.03,

Field Code Changed

2.05, 2.06, or the Special Provision (as appropriate) will not be measured for payment and the Contractor assumes responsibility for all costs associated with the appropriate handling, management and disposal of this material.

The disposal of railroad ties and timber members, originally anticipated to be contaminated, but determined by characterization sampling to be suitable for disposal as bulky waste, will not be measured for payment under this Item but will be handled in accordance with the applicable provisions of the Contract regarding disposal of surplus excavated material.

Equipment decontamination, the collection of residuals, and the collection and disposal of liquids generated during equipment decontamination activities will not be measured separately for payment.

Any material processing required by the Contractor-selected disposal facility will not be measured for payment.

Basis of Payment:

This work shall be paid for at the Contract unit price, which price shall include the loading and transportation of contaminated railroad ties and contaminated timber members from the Project to the TDRF(s); the treatment/recycling/disposal of such materials; the preparation of manifests, bills of lading, and fees paid; and all equipment, materials, tools, and labor incidental to this work. **This unit price will be applicable to all of the listed TDRFs and will not change for the duration of the Project.**

This price shall also include equipment decontamination; the collection of residuals generated during equipment decontamination; and the collection and disposal of liquids generated during equipment decontamination activities.

Pay Item	Pay Unit
Disposal of Contaminated Railroad Ties	Ton

Field Code Changed

ITEM #0201001A – CLEARING AND GRUBBING

Work under this item shall conform to the requirements of Section 2.01. amended and supplemented as follows:

2.01.01 Description: Add the following: Included in this work is the removal of the timber and concrete stairs, stair footings, lighting fixtures, railings, and all appurtenances at the Sound Beach Avenue Bridge.

Clearing and Grubbing pertains to the Sound Beach Avenue Bridge Site (Site No. 1), the Tomac Avenue Bridge Site (Site No. 2), and work to be performed within the north and south parking lots of the Old Greenwich Train Station.

2.01.02 Materials: N/A

2.01.03 Construction Methods: Add the following: All materials removed shall become the property of the Contractor and disposed of by him off the site, subject to the classification and stockpiling of materials that require special handling for environmental reasons, as such specified in these specifications.

2.01.04 Method of Measurement: Add the following: This work will be paid for on a lump sum basis and will not be measured for payment. The Contractor shall submit a schedule of values for clearing and grubbing for Basis of Payment.

2.01.05 Basis of Payment: Delete the first paragraph and replace with the following:

Payment for this work will be at the contract lump sum price for "Clearing and Grubbing" for the Sound Beach Avenue Site (Site No. 1), Tomac Avenue Site (Site No. 2), and work to be performed within the north and south parking lots of the Old Greenwich Train Station and shall include all equipment, tools, and labor incidental thereto.

Pay Item	Pay Unit
Clearing and Grubbing	L.S.

ITEM #0201013A – REMOVAL OF EXISTING FENCE

2.01.01 Description: Work under this item shall consist of the removal of the existing fence at the location shown on the plans or as directed by the Engineer. The fence and associated materials (posts, fasteners, caps, and concrete bases) shall remain the property of the Contractor.

2.01.02 Materials: N/A

2.01.03 Construction Methods: The Contractor shall remove the existing fence and associated materials (posts, fasteners, caps, and concrete bases as indicated on the plans or as directed by the Engineer. The removed fence and associated materials shall be properly disposed of by the Contractor.

2.01.04 Method of Measurement: Removal of Existing Fence shall be measured for payment by the number of linear feet of existing fence removed and disposed of complete and accepted (including associated materials).

2.01.05 Basis of Payment: This work shall be paid for at the contract unit price per linear foot for "Removal of Existing Fence" complete, accepted in place, which price shall include the removal of associated materials, and all disposing, hauling and equipment, tools, and labor incidental thereto.

Pay Item	Pay Unit
Removal of Existing Fence	L.F.

ITEM #~~NO.~~ 0202315A - DISPOSAL OF CONTROLLED MATERIALS

Description:

Work under this Item shall consist of the transportation and final off-site disposal/recycling/ treatment of Controlled Materials (excluding dewatering fluids) that have been generated from various excavations within the Areas of Environmental Concern (AOECs) and the Low Level AOEC (LLAOEC) and that have been determined to be contaminated with regulated substances at non-hazardous levels. This contamination is documented in the report listed in the "Notice to Contractor – Environmental Investigations". The Controlled Materials will be properly characterized by the Engineer and shall be excavated, loaded, transported directly to, and treated/ recycled/disposed of at, a Department-approved permitted treatment/recycle/disposal facility (TDRF) listed herein.

Contractor Take Note: It is anticipated that the Contractor shall be able to excavate, load, and transport all Controlled Materials requiring off-site disposal directly from the Project site AEOC(s) and LLAOEC. No delay claim will be considered based upon the Contractor's failure to select facility(s) with enough capacity to handle the anticipated volume of Controlled Materials being generated by its activities.

Controlled Materials include:

(1) Soil materials (excluding pavement, concrete, sub-base, structures, utilities, and ledge/boulders) that contain regulated substances at concentrations exceeding numeric criteria in the Connecticut Department of Energy and Environmental Protection (CTDEEP) Remediation Standard Regulations (RSRs); and

(2) Soil materials that contain detectable concentrations of regulated substances that are below numeric criteria in the CTDEEP RSRs, but above typical background concentrations, and which cannot be reused within the Project Limits.

The Contractor must use the following Department-approved TDRFs for the disposal of non-hazardous materials:

Clean Earth of Carteret 24 Middlesex Avenue Carteret, NJ 07008 (732) 541-8909; Cheryl Coffee	Clean Earth of Philadelphia, Inc. 3201 S. 61 Street Philadelphia, PA 19153 (215) 724-5520; Mike Kelly
Clean Earth of Southeast Pennsylvania, Inc. 7 Steel Road Morrisville, PA 19067 (215) 428-1700; Joe Siravo	Cranston Sanitary Landfill 1690 Pontiac Avenue Cranston, RI 02920 (413) 552-3688; Paul Mahoney

ESMI of New York, LLC 304 Towpath Road Fort Edward, NY 12828 (518) 747-5500; Peter Hansen	ESMI of New Hampshire, LLC 67 International Drive Louden, NH 03307 (518) 747-5500; Peter Hansen
Hazelton Creek Properties, LLC 280 South Church Street Hazelton, PA 18201 (570) 207-2000; Allen Swantek	Northampton Landfill (Solid Waste Solutions, LLC) 170 Glendale Road Florence, MA 01062
Ontario County Landfill 3555 Post Farm Road Stanley, New York 14561 (603) 235-3597; Scott Sampson	Phoenix Soil, LLC 130 Freight Street Waterbury, CT 06702 (203) 759-0053; Kenneth Quirke
Soil Safe, Inc. 378 Route 130 Logan Township Bridgeport, NJ 08085 (410) 872-3990 XT. 1123; Mike Kozak	South Hadley Landfill, LLC 12 Industrial Drive South Hadley, MA 01075 (508) 989-7074; Ray Bailey
Ted Ondrick Company, LLC 58 Industrial Road Chicopee, MA 01020 (413) 592-2565; Alan Desrosiers	Upton Landfill (former) / Upton Site Remediation, LLC Maple Avenue Upton, MA (413) 522-3688 ; Paul Mahoney
Waste Management of NH; TLR III Refuse Disposal Facility 90 Rochester Neck Road P.O. Box 7065 Rochester, NY 03839 (603) 330-2170; Ellen Bellio	Waste Management (Chicopee Sanitary Landfill) 161 New Lombard Road Chicopee, MA 01020 (413) 534-8741; Tom Heaton
Waste Management Granby Sanitary Landfill 11 New Ludlow Road Granby, MA 01033 (413) 534-8741; Tom Heaton	

The above list contains TDRFs which can accept the waste stream generated by this Project in quantities limited by their permits and their operational needs. In addition, some of these TDRFs may become unavailable during the duration of the Project. It is the responsibility of the Contractor to verify that a TDRF will be available and capable of handling the volume as well as the chemical and physical characteristics of soil generated by this Project. As such, the Contractor must factor in such possibilities.

Field Cod

Construction Methods:

A. Submittals

The apparent low bidder shall submit in writing, within 14 days after bid opening the following:

1. A copy of the attached "Disposal Facility Material Acceptance Certification" form from each facility from the list above, which shall be signed by an authorized representative of each TDRF; and

2. A copy of the facility acceptance criteria and facility sampling frequency requirements from the TDRF.

Failure to comply with all of the above requirements may result in the rejection of the bid. If the material cannot be accepted by any of the TDRFs listed above, the Department will supply the Contractor with the name(s) of other acceptable facilities.

Field Cod

Disposal Facility Materials Acceptance Certification

Project Number: 301-0092

Project Location: Rehabilitation of Two Metro-North RR Bridges (No. 03948R – Sound Beach Avenue & No. 03955R – Tomac Avenue), Greenwich, CT

Facility Name: _____ Telephone: _____

Facility Address: _____ Fax: _____

_____

_____

The Contractor has supplied the analytical data contained in the report concerning the site investigation performed by the Designer. I have personally reviewed this data and intend to accept the following Controlled Material as described in Item 0202315A - Disposal of Controlled Materials.

This intent to accept the material will be subject to and dependent upon the facility's subsequent evaluation of waste characterization determination documentation to be provided to the Contractor by the Engineer.

Authorized Facility Representative_____/_____
Printed/Typed Name Title

_____/_____
Signature Date

Note: The facility shall attach the acceptance criteria and facility sampling frequency requirements to this document.

DO NOT ALTER FORM IN ANY WAY. FORM MUST BE COMPLETED IN ENTIRETY.

Field Cod

B. General

When Controlled Materials are encountered during the course of the work, health and safety provisions shall conform to the appropriate sections of the Contract. Provisions may include implementation of engineering controls, air and personal monitoring, the use of chemical protective clothing (CPC), personal protective equipment (PPE), implementation of engineering controls, and decontamination procedures.

Controlled Materials requiring disposal off-site shall be loaded directly into vehicles for immediate transport to the Contractor selected treatment/recycling/disposal facility(s). Controlled Materials awaiting disposal shall not be stockpiled within the Project limits, unless otherwise directed by the Engineer.

C. Material Disposal

The Engineer shall sample the in-place Controlled Materials prior to the start of any work for waste characterization purposes. The Engineer will provide the Contractor with the waste characterization sampling results.

The Contractor shall obtain and complete all paperwork necessary to arrange for material disposal (such as disposal facility waste profile sheets). It is solely the Contractor's responsibility to coordinate the disposal of Controlled Materials with the selected TDRF(s). Upon receipt of the final approval from the facility, the Contractor shall arrange for the excavation, loading, transport, and treatment/recycling/disposal of the materials in accordance with all Federal and State regulations.

The Contractor shall not begin excavation within the Project AOECs and/or LLAOEC until the selected disposal facility has indicated final approval of the Controlled Material for disposal. No claim will be considered based on the failure of the Contractor's selected TDRF(s) to meet the Contractor's production rate or for the Contractor's failure to select sufficient TDRF(s) to meet its production rate.

Any material processing (removal of woody debris, scrap metal, treated and untreated wood timber, large stone, concrete, polyethylene sheeting or similar material) required by the Contractor's selected facility, will be completed by the Contractor prior to the material leaving the site. It is solely the Contractor's responsibility to meet any such requirements of its facility. Any materials removed shall be disposed of or recycled in a manner acceptable to the Engineer at no additional cost. If creosote treated railroad ties or timbers are removed, they will be disposed of under the Item No. 0101133A – Disposal of Contaminated Railroad Ties, or in accordance with Article 1.04.05 in the absence of such item.

All manifests or bills of lading utilized to accompany the transportation of the material shall be prepared by the Contractor a minimum of 24 hours in advance and signed by an authorized Department representative, as Generator, for each truckload of material that leaves the site. The

Field Cod

Contractor shall forward the appropriate original copies of all manifests or bills of lading to the Engineer the same day the material leaves the Project.

A load-specific certificate of treatment/recycling/disposal, signed by the authorized agent representing the TDRF, shall be obtained by the Contractor and promptly delivered to the Engineer for each load.

D. Dust Control

The Contractor shall implement a fugitive dust suppression program in accordance with the Contract to prevent the off-site migration of particulate matter and/or dust resulting from excavation, loading, and operations associated with Controlled Materials. It shall be the Contractor's responsibility to supervise fugitive dust control measures and to monitor airborne particulate matter. The Contractor shall:

1. Employ reasonable fugitive dust suppression techniques.

~~2.~~1. Visually observe the amounts of particulate and/or fugitive dust generated during the handling of Controlled Materials. If the apparent amount of fugitive dust and/or particulate matter is not acceptable to the Engineer, the Engineer may direct the Contractor to implement corrective measures at his discretion, including, but not limited to, the following:

(a) apply water to pavement surfaces
(b) apply water to equipment and excavation faces; and
(c) apply water during excavation, loading, and dumping.

E. Material Transportation

In addition to all pertinent Federal, State, and local laws or regulatory agency polices, the Contractor shall adhere to the following precautions during the transport of Controlled Materials off-site:

1. Transported Controlled Materials are to be covered sufficiently to preclude the loss of material during transport prior to leaving the site and are to remain covered until the arrival at the selected TDRF;

2. Discharge openings on trucks used for the transportation of Controlled Materials must be securely closed during transportation and load tarpaulins must be deployed. Trucks deemed unacceptable for use by the Engineer shall not be used for the transportation of Controlled Materials;

3. All vehicles departing the Project are to be properly logged to show the vehicle identification, driver's name, time of departure, destination, approximate volume, and contents of materials carried;

Field Cod

4. No materials shall leave the site unless a TDRF willing to accept all of the material being transported has agreed to accept the type and quantity of waste; and

5. Documentation must be maintained indicating that all applicable laws have been satisfied and that materials have been successfully transported to and received at the TDRF.

F. Dewatering

Dewatering activities shall conform to items in pertinent articles of the Contract.

G. Equipment Decontamination

All equipment shall be provided to the work site free of gross contamination. The Engineer may prohibit from the site any equipment that in his opinion has not been thoroughly decontaminated prior to arrival. Any decontamination of the Contractor's equipment prior to arrival at the site shall be at the expense of the Contractor. The Contractor is prohibited from decontaminating equipment on the Project that has not been thoroughly decontaminated prior to arrival.

The Contractor shall furnish labor, materials, tools, and equipment for decontamination of all equipment and supplies that are used to handle Controlled Materials. Decontamination shall be conducted at an area acceptable to the Engineer and shall be required prior to equipment and supplies leaving the Project and between stages of the work.

The Contractor shall use dry decontamination procedures. Residuals from dry decontamination activities shall be collected and managed as Controlled Materials. If the results from dry methods are unsatisfactory to the Engineer, the Contractor shall modify decontamination procedures as required.

The Contractor shall be responsible for the collection and treatment/recycling/disposal of any liquid and solid wastes that may be generated by its decontamination activities in accordance with applicable regulations.

Method of Measurement:

The work of "DISPOSAL OF CONTROLLED MATERIALS" will be measured for payment as the actual net weight in tons of material delivered to the TDRF. Such determinations shall be made by measuring each hauling vehicle on the certified permanent scales at the TDRF before and after unloading and subtracting the weight of the empty vehicle from the weight of the loaded vehicle. Total weight will be the summation of weight bills issued by the facility specific to this Project.

Excess excavations made by the Contractor beyond the payment limits specified in Specification Sections 2.02, 2.03, 2.05, 2.06, or the Contract Special Provisions (as appropriate) will not be measured for payment and the Contractor assumes responsibility for all costs associated with the appropriate handling, management, and disposal of this material.

The disposal of excavated materials, originally anticipated to be Controlled Materials, but determined by characterization sampling not to contain concentrations of regulated chemicals (non-polluted or "clean" materials) will not be measured for payment under this Item but will be considered as surplus excavated materials and shall be handled in accordance with Article 1.04.05.

Any Controlled Materials which are reused within the Project limits will not be measured for payment under this Item.

Equipment decontamination, the collection of residuals, and the collection and disposal of liquids generated during equipment decontamination activities will not be measured separately for payment.

Any material processing required by the Contractor-selected disposal facility, including the proper disposal of all removed materials other than creosote treated wood, will not be measured for payment.

Basis of Payment:

This work shall be paid for at the Contract unit price, which shall include the transportation of Controlled Materials from the Project to the TDRF(s); the preparation of manifests, bills of lading, and fees paid; and all equipment, materials, tools, and labor incidental to this work. **This unit price will be applicable to all of the listed TDRFs and will not change for the duration of the Project.**

This price shall also include equipment decontamination, the collection and handling of residuals generated during decontamination, and the collection and disposal of solids and liquids generated during equipment decontamination activities.

Payment for dust control activities shall be made under the appropriate Contract items.

Pay Item	Pay Unit
Disposal of Controlled Materials	ton

Field Cod

ITEM #0202513A- REMOVAL OF CONCRETE SIDEWALK

Work under this item shall conform to the requirements of Section 2.02 Form 8.16 supplemented and amended as follows:

2.02.01 Description: Add the following:

Concrete sidewalks shall be removed and disposed of at locations shown on the contract plans or as ordered by the Engineer.

2.02.02 Materials: N/A

2.02.03 Construction Methods: Add the following:

Concrete Sidewalks shall be removed in their entirety.

2.02.04 Method of Measurement: Add the following:

This work shall be measured for payment by the number of square yards of concrete sidewalk removed and disposed of in accordance with the contract plans and this specification.

2.02.05 Basis of Payment: Add the following:

Payment for this work will be made at the contract unit price per square yard for "REMOVAL OF CONCRETE SIDEWALK," which price shall include all materials, equipment, tools, and labor incidental thereto including all disposal costs.

Pay Item	Pay Unit
Removal of Concrete Sidewalk	S.Y.

ITEM #0202530A REMOVAL OF BITUMINOUS SIDEWALK

Work under this item shall conform to the requirements of Section 2.02 Form 816 supplemented and amended as follows:

2.02.01 Description: Add the following:

Bituminous sidewalks shall be removed and disposed of at locations shown on the contract plans or as ordered by the Engineer.

2.02.02 Materials: N/A

2.02.03 Construction Methods: Add the following:

Bituminous sidewalks shall be removed in their entirety.

2.02.04 Method of Measurement: Add the following:

This work shall be measured for payment by the number of square yards of bituminous sidewalk removed and disposed of in accordance with the contract plans and this specification.

2.02.05 Basis of Payment: Add the following:

Payment for this work will be made at the contract unit price per square yard for "REMOVAL OF BITUMINOUS CONCRETE SIDEWALK," which price shall include all materials, equipment, tools, and labor incidental thereto including all disposal costs.

Pay Item	Pay Unit
Removal of Bituminous Concrete Sidewalk	S.Y.

ITEM #0202533A REMOVAL OF EXISTING CURBING

Work under this item shall conform to the requirements of Section 2.02 Form 8.16 supplemented and amended as follows:

2.02.01 Description: Add the following:

Curbing shall be removed and disposed of at locations shown on the contract plans or as ordered by the Engineer.

2.02.02 Materials: N/A

2.02.03 Construction Methods: Add the following:

Bituminous, concrete, or granite curbing shall be removed in its entirety.

2.02.04 Method of Measurement: Add the following:

This work shall be measured for payment by the number of linear feet of curbing removed and disposed of in accordance with the contract plans and this specification.

2.02.05 Basis of Payment: Add the following:

Payment for this work will be made at the contract unit price per linear feet for "REMOVAL OF EXISTING CURBING," which price shall include all materials, equipment, tools, and labor incidental thereto including all disposal costs.

Pay Item	Pay Unit
Removal of Existing Curbing	L.F.

ITEM #0202629A – SETTLEMENT MONITORING PROGRAM

2.02.01 Description: This item consists of monitoring movement of the existing rail facilities during construction for Site No. 1 and Site No. 2. The monitoring program at each site shall be adequate to document any settlement or horizontal movement of the railroad track(s), bridge foundations, catenary supports, soldier pile and lagging or sheet piling installations, and other miscellaneous rail facilities during construction activities at the sites. The monitoring program at each site shall be in conformance with the minimum requirements detailed in this specification or as noted on the plans for number of monitoring points, locations of points, intervals for recording data, procedures and period of time to report the data to the Engineer, maintenance of points, and the removal of points after completion of the work.

2.02.02 Materials: Settlement monitoring points shall be constructed of materials suitable for use as survey reference points and as approved by the Engineer. The material shall be dimensionally stable and the points shall be installed in a manner to allow for easily repeatable survey readings to be taken at the points. Settlement monitoring points for railroad tracks on embankments shall be steel rods, three feet in length, driven into the ballast at the centerline of the track between cross ties. The rods shall be driven so the top of rod is flush with the top of cross tie.

2.02.03 Construction Methods: Settlement Monitoring programs shall be established at all sites a minimum of 2 days prior to the commencement of any construction at the site. Initial readings shall be recorded both at the time of point installation and prior to the commencement of construction activities, to establish the baseline readings.

The number and locations of monitoring points shall be in conformance with site specific plan details as applicable, and the following minimum criteria: track monitoring points shall be established for the nearest track at intervals not to exceed 25’ for a minimum distance of 100’ from all construction activities which have the potential to cause settlement; lateral support monitoring points shall be established on all support of excavation systems within the railroad right of way, at minimum 20’ intervals; and structure monitoring points shall be established at the corner of each bridge substructure unit or catenary tower foundation within 100’ from all construction activities which have the potential to cause settlement. Construction activities considered having the potential to cause settlement for purposes of this specification include but are not limited to the following: all excavation within the Railroad live load influence line as defined in Section 1.05; installation of piles; installation of sheet piling or soldier pile and lagging; jacking of pipes; and installation of soil anchors.

Monitoring points shall be established by the Contractor for the specific purpose of providing a reliable, reproducible reference point compatible with the survey equipment to be used by the Contractor for the monitoring program.

The Contractor shall take location readings on the established monitoring points using survey equipment capable of reading to a precision of 0.01 ft in both the horizontal and vertical datum.

The monitoring points shall be monitored at the following minimum intervals:

-prior to the commencement of construction activities for each site
-daily at the beginning and end of each shift for a given site with active construction
-weekly for a given site without any active construction; this interval may be increased to an interval approved by the Engineer for sites that exhibit no evidence of movement
-after the completion of all construction activities at a given site
-the next working day after rainfall in excess of 1-inch in a 24 hour period at a given site
-as ordered by the Engineer

The Contractor shall notify the Engineer if any movement has been measured at a settlement monitoring point. Any points that have measured movement exceeding 1/4" shall be immediately brought to the attention of the Engineer, and construction activities in the immediate vicinity of the movement shall be halted until any necessary corrective action has been taken or as ordered by the Engineer. The Contractor shall modify the means and methods associated with any construction activities that result in movement exceeding 1/4".

Survey monitoring information shall be reduced and tabulated by the Contractor, in a format approved by the Engineer, and shall be submitted to the Engineer in hard copy format. Tabulated data shall be submitted weekly except for sites with measured movement exceeding 0.01', where the reduced data shall be submitted to the Engineer daily.

The Contractor shall maintain the monitoring points during the construction phase and shall be responsible to re-establish or replace monitoring points for all locations damaged during the time periods when monitoring is required at a given site. New baseline monitoring point reference data shall be established for replacement points prior to resuming construction activities at a given site.

Upon completion of the construction at a site, the Contractor shall remove any monitoring point(s) installed and restore the original condition of the affected structure(s) unless the Engineer approves the abandonment of the monitoring point in place.

2.02.02.04 Method of Measurement: This item, being paid for on a lump sum basis, will not be measured for payment.

2.02.02.05 Basis of Payment: This work will be paid for at the contract lump sum price for "Settlement Monitoring Program", which price shall include the furnishing and installation of monitoring points, survey monitoring of the points at the required intervals, maintenance and protection of the points, replacement of damaged monitoring points, removal or abandonment of monitoring points, the recording and processing of the data, the transfer of data to the Engineer

and all materials, equipment, tools, and labor incidental thereto.

Pay Item	**Pay Unit**
Settlement Monitoring Program	L.S.

ITEM #0207150A – LIGHTWEIGHT FILL

02.07.01 - Description: Work shall consist of furnishing and placement of lightweight fill in the formation of embankments or as backfill in front of and behind structures. This work shall be performed as hereinafter specified, to the dimensions indicated on the plans, or as directed by the Engineer. This item shall also consist of furnishing and placing crushed stone or gravel in burlap bags at the inlet ends of weep holes in structures to the dimensions indicated on the plans or as ordered by the Engineer.

02.07.02 - Materials: Lightweight fill shall be a rotary kiln expanded shale aggregate meeting the requirements of ASTM C 330. No by-product slags, cinders or by-products of coal combustion shall be permitted. The aggregate shall consist of tough, durable, non-corrosive particles with the following gradation:

Square Mesh Sieves	Percent Passing by Weight
1”	100
3/4”	90 - 100
3/8”	10-50
No. 4	0 – 15
No. 200	0 - 10

The dry loose unit weight shall be less than 50 pcf. The lightweight aggregate supplier shall submit verification of an in-place compacted total unit weight (by methods defined in AASHTO T99) of less than 65 pcf. For purposes of this specification, the total unit weight is defined as the maximum dry density multiplied by one plus the moisture content (as a decimal). For example, if the maximum dry density is 45 pcf and the moisture content is 9%, the total unit weight is 49 pcf).

The maximum soundness loss when tested with 5 cycles of magnesium sulfate shall be 10 percent (ASTM C 88). The maximum Los Angeles Abrasion loss when tested in accordance with ASTM C 131 (B grading) shall be 40 percent.

The lightweight aggregate producer shall submit verification that the angle of internal friction is equal to or greater than 40 degrees when measured in a triaxial compression test on a laboratory sample with a minimum diameter of 250 mm.

02.07.03 - Construction Methods: When applicable and except where noted below, lightweight fill placement shall conform to the requirements of Sections 2.02.03 and 2.16.03 of the Standard Specifications, Form 816.

The layer thickness shall be as specified in applicable sections of the Standard Specification Form 816 (Section 2.02.03 for lightweight fill used for embankment formation and Section 2.16.03 for lightweight fill used as backfill), but shall not exceed 12 inches loose thickness. Each layer shall be compacted by the use of self-propelled vibratory compaction equipment with static mass (weight) less than 24,000 lbs. The minimum number of passes shall be two (2) and the maximum four (4). The lift thickness and exact number of passes shall be determined by the Engineer depending on the type of compaction equipment. The contractor shall take all necessary precautions during construction activities in operations on or adjacent to the lightweight fill to ensure that the material is not over compacted. Construction equipment, other than for compaction, shall not be operated on the exposed lightweight fill.

Where weep holes are installed within the limits of lightweight fill, bagged stone shall be placed around the inlet end of each weephole, to prevent movement of the lightweight fill material into the hole.

02.07.04 - Method of Measurement: Lightweight fill shall be measured in place after compaction, including allowances for settlement. Bagged stone shall be measured and paid for under the item “Bagged Stone”.

02.07.05 - Basis of Payment: This work will be paid for at the contract unit price per cubic meter for “Lightweight Fill”, complete in place, which price shall include all materials, transportation, tools, equipment and labor incidental thereto.

Pay Item	Pay Unit
Lightweight Fill	CY

ITEM #0213901A – BALLAST

2.13.01 Description: This item shall consist of furnishing and placing of ballast material necessary for the construction of the track beds complete. The work shall be in conformance with the details shown on the plans or as ordered and in accordance with the provisions of this Specification Section.

In addition, for construction Site No. 1, Bridge No. 03948R, this item shall include the sawcutting of the bridge deck, drilling and grouting of #4 bars for the temporary ballast retainer, and the fabrication, installation and removal of temporary ballast retainers required for stage construction.

Contractor shall perform work in accordance with applicable recommended practices set forth in the 2013 AREMA Manual for Railway Engineering and as specified herein.

2.13.02 Materials: Ballast shall be crushed trap, flint or other rock approved by the Metro-North Railroad. It shall be: a) composed of angular fragments which are clear and free from deleterious substances, b) of proper gradation and c) meet all requirements of this specification.

Gradation: Ballast shall conform to the following scale when tested with laboratory sieves having square openings. (Sieves must conform to current ASTM Specifications for sieves of Testing Purposes, Designation E 11):

Size No.	Nom. Size Sq. Opening	Amount Finer Than Each Sieve (Sq. Opening Laboratory Sieve-Pct. By Wgt.) 2 in	1 ½ in	1 in	¾ in	½ in	3/8 in	#4
4	1 ½ in - ¾ in	100	90 - 100	20 - 55	0 -15		0 -5	
5	1 in - 3/8 in		100	90 - 100	40 - 75	15 - 35	0 - 15	0 - 5

Ballast Quality Requirements:

1. Deleterious substances in ballast shall be present in excess of the following amounts:

Description	Percent by Weight	Method of Test
Soft and friable pieces	3.0 percent	
Material finer than No. 200 sieve	0.5 percent	ASTM C117
Clay Lumps	0.5 percent	ASTM C142

2. Hardness:

   Average hardness shall be at least 5.5 as measured on Moh Hardness scale.

3. Absorption:

   Water absorption shall not exceed 1.2% when tested in accordance with ASTM C127.

4. Chemical Analysis:

Type A ballast chemical analysis shall reveal quantitatively that at least 70% of test sample is composed of silicon dioxide, aluminum oxide, and iron oxide, but that not more than 25% of test sample is comprised of magnesium oxide, magnesium carbonate and calcium carbonate.

5. Los Angeles Abrasion:

   Percent of wear shall not exceed grading of sample (14.6%).

6. Cementing Value:

   When LA abrasion is in excess of 13.0% wear, cementing value in pounds per square inch shall not exceed 375.

7. Sodium Sulphate Soundness:

   Soundness of the prepared ballast shall be such that when tested in the sodium sulphate soundness test in accordance with ASTM C88, weighted average loss shall not exceed 1.5 percent after 10 cycles of test.

8. Impedance:

   Impedance must be in excess of 2.6 K ohms.

9. Testing:

   The quality of stone for ballast from any quarry or new strata opened up, including its soundness, resistance to abrasion, chemical composition, absorption, impedance, hardness and mass per cubic meter, shall be determined prior to its acceptance, at a testing laboratory selected by the purchaser. Each stratum or portion of quarry containing a variation of quality of stone shall be tested separately and not averaged. Quality tests and gradation tests shall subsequently be made from time to time as deemed necessary by the purchaser to control the quality and size of ballast furnished by the producer.

   Sufficient visual observations, determinations of deleterious substances and analyses of gradation shall be made by the producer prior to shipment to assure compliance with these specifications.

   The Contractor shall provide certified results of tests required by specifications. The railroad reserves the right to witness the performance of tests. If the Contractor desires to use its own testing facilities to make the aforementioned tests, the Railroad's concurrence must be received.

10. Method of Testing:

    a. The Sieve Analysis shall be made in accordance with the Method of Tests for Sieve Analysis of Fine and Course Aggregate (ASTM. Designation C136).

    b. Los Angeles Abrasion Loss shall be treated in accordance with Method of Test for Abrasion of Course Aggregate by use of the Los Angeles machine (ASTM Designation C131) except that Grading of the Sample for testing shall be as follows:

Sieve Size – Square Openings		
Passing	Retained On	Weight in Grams (oz.)
50 mm (2 in)	44.5 mm (1 ¾ in)	1250 (44)
44.5 mm (1 ¾ in)	37.5 mm (1 ½ in)	1250 (44)
37.5 mm (1 ½ in)	32 mm (1 ¼ in)	1250 (44)
32 mm (1 ¼ in)	25 mm (1 in)	1250 (44)

c. Soundness shall be treated in accordance with the current Method of Test for Soundness of Aggregate by use of Sodium Sulphate (ASTM Designation C88).

d. Cementing Values shall be tested in accordance with the Logan Walter Page Method (U.S. Dept. of Agriculture, Bulletin No. 347, 1916, Page 15) except as modified as follows:
   1. 500 grams (1.1 pounds) of fines developed from the Los Angeles Abrasion Test (ASTM C131) that has been screened through a 100-mesh sieve, mixed with sufficient water, kneaded for five minutes and allowed to stand in an air tight container for two hours, thereby forming a stiff dough that is to be molded into cylindrical briquettes 2.54 cm. (1 in.) diameter by 2.54 cm. (1 in.) in height under pressure of 132 kgs. per sq. cm (1877.5 pounds per square inch), after which they are dried for 20 hours in air at room temperature, 4 hours in a hot air bath at a temperature of 100°C (212° F), then cooled for 20 minutes in a desiccator, and immediately tested in a compression testing machine for static crushing strength, the bearing heads being suspended by pivots to secure uniform distribution of load which is applied at 2.7 kN (600 pounds) per minute approximately.

   2. The average crushing strength in pounds per square inch of 5 specimens measures the cementing value of this stone.

11. Contractor Certification:

The Contractor shall certify that ballast delivered to the site is typical of that upon which specified tests have been made.

2.13.03 Construction Methods:

1. Submittals: Submit name and location of proposed ballast supplier. Submit the type and specifications of equipment to be used in placing and compacting ballast. All submittals will be reviewed for general conformance with the intent of the contract documents. This review will not relieve the Contractor of final responsibility for the means, methods, procedures and sequences to be utilized.

2. Cleaning: The Contractor shall be responsible for assuring ballast cleanliness. A suitable washing facility shall be provided at the quarry for this purpose. This facility shall consist of a high pressure spray over the ballast as in passes in the belt. A quality control plan along with washing procedures must be submitted with Contractor's quotation. These will be subject to approval by the Engineer.

3. Handling: Prepared ballast shall be handled in such a manner that it is kept clean and free from segregation. It shall be loaded only into cars, which are in good order, tight enough to prevent leakage and waste of material, and clean and free from rubbish or any substance, which would foul the ballast.

4. Quality Control: Ballast Production Site Testing: Notify the Engineer, no less than 30 days prior to shipment of any ballast to work site, of the proposed source and location of crushed stone ballast. The Engineer shall obtain samples of proposed material and test them for conformance to classification, quality, and grading requirements specified.
5. Samples: The selection of samples is as important as the laboratory testing, and care must be taken that the samples obtained show the true nature and conditions of the material to be examined.

   Samples of all ballast and samples of stone at quarries for test to determine the acceptability of the source, as well as samples for quality control, shall be selected by a representative of the purchaser. The owner of the quarry or producer may submit samples for inspection or preliminary testing if such action is approved by the Engineer.

   Samples of the finished product for gradation and other required tests shall be taken from each 1,000 tons of prepared ballast unless otherwise ordered by the Engineer. Samples shall be representative (full belt) and shall have a mass not less than 110 pounds. Where the acceptability of stone from a quarry is to be determined, a 165 pound sample consisting of pieces of approximately 6 x 6 x 4 inches should also be furnished. Method of sampling shall be furnished to the Engineer for approval.

   The Engineer will notify the Contractor of test results. If ballast fails to meet these specifications, ballast quarry will be rejected.

   Ballast material shall be approved in writing by the Engineer prior to commencing work site delivery.

   If, during ballast installation, the source of ballast changes, the Engineer will perform tests at the new production site in accordance with these Specifications. Ballast shall have the same or higher classification, quality, and grading as the former ballast used. Work site delivery shall not commence until the Engineer has approved the new ballast source in writing.

6. Ballast Job-Site Testing: Periodically during progress of track construction, the Engineer will test samples of ballast obtained from in-place locations designated by the Engineer to insure a uniform quality of ballast.

   If material prior to, during or after being loaded, does not conform to specifications, the Engineer shall notify Contractor to stop operations until all faults have been corrected. Disposal and/or removal of defective material shall be done at no additional cost.

   As it is impractical to inspect all ballast at the quarry, the Engineer reserves the right to reject any car of ballast (whether previously inspected or not) that does not conform to specifications upon arrival at unloading site.

   No ballast shall be unloaded unless it has been approved by the Engineer.

Should ballast that does not meet specifications be unloaded prior to the Engineer's approval, then payment will not be made to Contractor. Contractor must remove all defective material from site at no additional cost.

Defective material arriving at site for unloading shall be rejected by the Engineer and disposed of at expense (including all freight and switching costs) of Contractor.

7. Ballast Placement

a. Clean the trackway area of all debris and standing water prior to placing of ballast. Do not place ballast on frozen subgrade or sub-ballast.
b. Check grade lines and cross section of sub-ballast or finished subgrade prior to placing ballast. Bring subgrade to proper elevation as shown on Contract Drawings.
c. Deliver ballast at a rate no faster than can be satisfactorily incorporated into the work, and as such times as to permit proper inspection by the Engineer.
d. To the extent practicable, unload ballast in position for use with a minimum of redistribution.
e. Place ballast in multiple layers not exceeding 4 inches in thickness each.
f. Self-spreading vehicles may be used as approved by the Engineer. When stone is initially spread by self-spreading vehicle a power grader may be used to assist spreading operations
g. Thoroughly compact ballast until stones are firmly interlocked and the surface is true and unyielding. Compact each lift with not less than four passes of a roller or a vibratory compactor subject to the following requirements:

    1. Compact by rolling using either a self-propelled, three-wheel, two axle roller of such weight that will provide compression under the rear wheels of not less than 350 pounds per linear inch of tread; or using a two or three-wheel tandem roller having a weight per meter of drive roll of not less than 350 pounds, and every part of the surface receiving compression from the drive wheels.

    2. Compact by vibration using vibration compactors of either the roller or pad type. Dynamic force for either type shall not be less than 20,000 pounds and the frequency range shall be 1100 to 1500 vpm. Use machines equipped with a governor, which can be set and locked to control rate of impulse. Provide a tachnometer or other suitable device for accurately checking the frequency of vibration during the compacting operation.

h. Top surface of initial layers of ballast shall be smooth, flat and uniformly compacted.

2.13.04 Method of Measurements:

This work will be measured for payment by the number of cubic yards of ballast furnished, placed, compacted, and accepted in place.

2.13.05 Basis of Payment:

Payment for this work will be made at the contract unit price per cubic yard for "Ballast" complete in place, which price shall include all material, equipment, tools, labor and work incidental thereto.

Pay Item	Pay Unit
Ballast	C.Y.

ITEM #0213902A – SUB-BALLAST

2.13.01 Description: This item shall consist of furnishing and placing of sub-ballast as necessary for the construction of the track bed. The work shall be in conformance with the details shown on the plans or as ordered and in accordance with the provisions of this Specification Section.

Contractor shall perform work in accordance with applicable recommended practices set forth in the 2009 AREMA Manual for Railway Engineering and as specified herein.

2.13.02 Materials: Sub-ballast shall be crushed stone or granulated, expanded or air-cooled slag with an average hardness of 5.5 minimum on Moh's Scale of Hardness. It shall be: a) composed of clean, hard, uncoated particles free from lumps of clay, shale and other object ional materials, b) of proper gradation and c) meet all requirement of this specification.

Gradation shall be in accordance with ASTM C136 and C117 as follows

Sieve Size	Percent Passing by Weight
1 inch	100
3/8 inch	50 to 85
No. 4	35 to 65
No. 10	25 to 50
No. 40	15 to 25
No. 200	4 to 10

The fraction passing the No. 200 sieve shall be less than two-thirds of the fraction passing the No. 40 sieve.

Deleterious substances in sub-ballast shall not be present in excess of the following amounts:

Description	Percent by Weight	Method of Test
Soft Particles	5 percent	
Clay lumps and friable particles	0.5 percent	ASTM C 142
Wear	20 percent	ASTM C 131
Absorption:	0.5 percent	ASTM C 127

Crushing of sub-ballast shall not be required except the supplier may, at his option, elect to crush any oversize particles present in the deposit as an alternative to screening.

Notify the Engineer at least 30 days prior to delivery, of the source and location of the source of materials to be used in order that the approval test may be made. Use only the one approved material to complete the order. Do not change the source of material unless the Engineer approves the new source and material in writing.

Sub-ballast shall be handled during all stages of production and delivery in a manner that will provide a uniform product and will prevent contamination or segregation.

To satisfy the requirements of this specification sub-ballast may be screened, crushed, washed or otherwise processed to produce a uniform acceptable product. Blending of materials to improve quality will not be permitted.

2.13.03 Construction Methods:

Shipping: Load sub-ballast only into rail cars or trucks, which are in good order, tight enough to prevent leakage and waste of material, and are clean and free of rubbish or any substance, which would foul the sub-ballast material.

Submittals: Submit name and location of proposed sub-ballast supplier. Submit the type and specifications of equipment to be used in placing and compacting sub-ballast. All submittals will be reviewed for general conformance with the intent of the contract documents. This review will not relieve the Contractor of final responsibility for the means, methods, procedures and sequences to be utilized.

Handling: Handle prepared sub-ballast at production plant, during shipment and at work site so that it is kept clean and free from segregation.

Do not make repeated passes of equipment over the same level in stockpile area.

Sub-ballast Job-Site Testing: Periodically during progress of track construction, the Engineer will test samples of sub-ballast obtained from in-place locations designated by the Engineer to insure a uniform quality of sub-ballast.

If material prior to, during or after being loaded, does not conform to specifications, the Engineer shall notify Contractor to stop operations until all faults have been corrected. Disposal and/or removal of defective material shall be done at no additional cost.

As it is impractical to inspect all sub-ballast at the quarry, the Engineer reserves the right to reject any car of sub-ballast (whether previously inspected or not) that does not conform to specifications upon arrival at unloading site.

No sub-ballast shall be unloaded unless the Engineer has approved it.

Should sub-ballast that does not meet specifications be unloaded prior to the Engineer's approval, then payment will not be made to Contractor. Contractor must remove all defective material from site at no additional cost.

Defective material arriving at site for unloading shall be rejected by the Engineer and disposed of at expense (including all freight and switching costs) of Contractor.

Placing of Sub-ballast:

A. Subgrade Preparation

1. Place initial layer of sub-ballast material only on subgrade, which has been inspected and accepted by the Engineer.

2. If unsuitable subgrade material, in the judgment of the Engineer, is found at or below the grade to which excavation would normally be carried in accordance with the Contract Drawings, the Contractor shall remove such materials to the required width and depth and replace it with thoroughly compacted Ordinary Borrow as directed by the Engineer.

B. Sub-ballast Placement

1. Place sub-ballast in layers not exceeding 4 inches in thickness. Use multiple layers to build up the thickness as shown on Contract Drawings or as required by the Engineer.

2. Unless otherwise indicated or specified, each layer shall be compacted to 95 percent of maximum, dry density in accordance with ASTM D1557 Method D or C or ASTM D4253.

3. Remove, replace and recompact any sub-ballast, which after being rolled does not form a satisfactory solid stable foundation.

2.13.04 Method of Measurement:

This work will be measured for payment by the number of cubic yards of sub-ballast furnished, placed, compacted, and accepted in place.

2.13.05 Basis of Payment:

Payment for this work will be made at the contract unit price per cubic yard for "Sub-Ballast" complete in place, which price shall include all materials, equipment, tools, labor and work incidental thereto.

Pay Item	Pay Unit
Sub-Ballast	C.Y.

ITEM #0213904A – BALLAST MAT

2.13.01 Description: This work consists of furnishing and installation of a vibration mitigating ballast mat with geotextile fabric for materials separation as indicated on the Contract Drawings. Ballast mats shall be provided on the deck and curbs of the safety walks.

2.13.02 Materials:

1. Ballast mat shall consist of reinforced natural rubber designed to provide reduction of ground or structure borne vibrations, of the impact on structures and of the crushing of ballast. The upper structure of the mat shall be textured to permit ballast to nest for trackbed stability and be designed for protection against attack by contaminants that may filter through ballast over time. The subsurface shall contain fabric reinforcement for strength and load distribution. The underside shall provide for subsurface drainage under the mat.

2. Other items required for ballast mat installation are as follows:

   Appurtenances and installation of tools for joining and sealing abutting mat edges as recommended by the manufacturer.

   Galvanized steel retention devices (flashing) and bolts furnished by the Contractor to retain ballast and secure the mat respectively.

   Ballast Mat Properties:

   A. Ballast mat material shall satisfy the following requirements:

      Capacity: An axle load of 44 tons.

      Dimensions:

      1) Width no less than 48”, not including joint overlaps.
      2) Thickness 9/16 “

      Fabric:

      1) Tensile strength $\geq$ 1,150 lb/inch
      2) Elongation at break $\geq$ 10%

   Elastomer Properties (natural rubber unless otherwise specified):

      1) Top layer (synthetic):
         a. Tensile strength $\geq$ 1,450 psi
         b. Elongation at break $\geq$ 350%
         c. Tera-resistance 28 lb/inch

d. Hardness (Shore A) = 58 (± 5)

2) Isolating Layer:
   a. Tensile strength ≥ 2,175 psi
   b. Elongation at break ≥ 28 lb/inch
   c. Hardness (Shore A) = 70 (± 5)
   d. Compression Set (for 24 hours at 158 degrees F) ≤ 25%

Dynamics: Dynamic to static stiffness ratio (related to a preload of 8.5 psi) K_d = 1.7 (+0.1/-free).

Temperature Range: Standard quality is suitable for service where ballast mat temperature range between (-) 4 degrees F and (+) 158 degrees F.

B. The material used for the sealing of ballast mat joints shall be an integral extension of the top surface of the mat or a separate material having strength characteristics equal to those of the top layer of the ballast mat.

3. Quality Control:

A. A representative of the manufacturer of the ballast mat shall be present on the project site at least two days prior to the commencement of ballast mat installation and shall remain on the site and to otherwise supervise the ballast mat installation work for the duration of the installation or for a period of at least one week, as deemed necessary by the Engineer to ensure proper installation.

B. Securely store and properly protect ballast mat and all associated materials required for installation and take necessary precautions for the handling and delivery to the job site. Damaged materials will not be accepted for installation.

C. Provide an independent testing laboratory certification of the test results certified by a recognized independent authority that the material specifications of the ballast mat to be installed on this project is as specified herein and is compatible with substrates on which the mat is to be installed.

4. Submittals:

A. Submit complete details of the proposed ballast mat and any required related materials, including shop drawings and a detailed procedure for the storage, handling, transport, installation and protection of the ballast mat (including compaction procedures and equipment for initial layer of ballast) for approval by the Engineer.

B. Contractor shall investigate delivery time for ballast mat materials in order to assure timely delivery for stages of work.

2.13.03 Construction Methods:

1. Preparation:

Construction of the trackbed and bridge deck shall be completed as shown on the Contract Drawings. The bridge deck ballast mat shall be continued upward from the floor along the vertical face of the concrete safety walk. Other inside and outside, horizontal and vertical wall corners shall be square. Ballast mat shall be continuous across all phases of staged construction.

2. Ballast Mat Installation:

A. Prior to installation of the ballast mat, the railroad deck waterproofing shall be thoroughly cleaned of all debris and dust. Rough or uneven area shall be removed until the surface is made to be acceptable by the Engineer.

B. Unroll ballast mat from reels positioned close to point of installation in accordance with approved procedures and as directed by the manufacture's representative. At bridge decks, push one end under the upper floor plate and measure to accurately determine the length of mat required. Edges shall be cut straight and smoothly to assure a uniform fit at all joints, tapered at trackway curves, and at ends, which shall be sealed as recommended by the manufacturer.

C. Secure ballast mat at all seams as recommended by the manufacturer providing a watertight seam at abutting mats.

D. At all times exercise extreme care to prevent intrusion of silt and debris into the void space provided under the mat. The joints shall be protected and the galvanized steel strips shall be placed over the edges of the ballast mat as soon as the mat is installed. At no time shall water, silt, and debris be allowed to enter into newly installed ballast mat from the trackway or from other sources.

Temporary positive seals shall be installed along the open edges of the mat to prevent such intrusion. Permanent seals with an approved mastic shall be installed on the open edges of the ballast mat. Ballast mats contaminated with silt and debris shall be removed, cleaned, and re-installed or replaced with new materials at no additional cost to the State.

E. Place a caulking sealant compatible with the ballast mat at all extremity edges, mat joints where the mat interfaces concrete and/or steel surfaces to assure water tightness.

3. Placement of Ballast:

A. The Engineer will witness the handling and compaction of ballast over top of ballast mat. Equipment to be used for tamping of ballast shall be subject to approval by the

Engineer. Ballast mat shall be protected per manufacturer's requirements prior to placement of ballast.

B. Ballast shall not be transported across the ballast mat. Trucks and any other construction equipment shall not operate on the ballast mat unless it is covered with at least six (6) inches of ballast.

2.13.04 Method of Measurement: This work will be measured by the square foot furnished and installed including all materials and incidentals shown on the Contract Drawings, measured in place prior to backfilling with ballast.

2.13.05 Basis of Payment: Payment for Ballast Mat will be paid at the contract unit price per square foot "Ballast Mat" complete in place, which price shall include all technical support, materials, equipment, tools and labor incidental thereto.

Pay Item	Pay Unit
Ballast Mat	S.F.

ITEM #0216000A – PERVIOUS STRUCTURE BACKFILL

2.16.01 Description: Pervious structure backfill shall include the furnishing, placing, and compaction of pervious material adjacent to structures.

2.16.02 Materials: Pervious structure backfill shall conform to the requirements of Article M.02.05.

The materials for bagged stone shall conform to the following requirements:

(a) The crushed stone or gravel shall conform to the grading requirements of Article M.01.01 for No. 3 or No. 4 coarse aggregate or a mixture of both.
(b) The bag shall be of burlap and shall be large enough to contain one cubic foot of loosely packed granular material.

2.16.03 Construction Methods: Pervious structure backfill shall be placed adjacent to abutment backwalls, and elsewhere as called for. It shall be placed above a plane extending on a 2 to 1 slope from the upper edge of the footing to the top of the embankment, or as shown on the plans. Where the face of undisturbed material is above or beneath this slope plane, the amount of pervious structure backfill shall be decreased or increased accordingly, if ordered by the Engineer.

In filling behind abutment backwalls, or other structures, the fill is placed against undisturbed material, or against compacted embankments having a length in a direction at right angles to the abutment wall not less than twice the height of the structure against which the fill is placed. The slope of the embankment on which the pervious structure backfill is to be placed shall be plowed deeply or cut into steps before and during the placing of pervious structure backfill so both types of material will be thoroughly bonded and compacted.

Each layer of pervious structure backfill shall be spread to a thickness not exceeding 6 inches in depth after compaction and shall be thoroughly compacted as directed by the Engineer by the use of power rollers or other motorized vehicular equipment, by tamping with mechanical rammers or vibrators, or by pneumatic tampers. Any equipment not principally manufactured for compaction purposes and equipment, which is not in proper working order in all respects, shall not be used within the area described above.

Special attention shall be given to compaction in places close to walls where motorized vehicular equipment cannot reach. Within three (3) feet of the back face of walls and within a greater distance at angle points of walls, each layer of pervious structure backfill shall be compacted by mechanical rammers, vibrators, or pneumatic tampers.

The dry density of each layer of pervious structure backfill formed from broken or crushed stone, broken or crushed gravel or reclaimed miscellaneous aggregate free of bituminous concrete shall have a dry density after compaction that is no less than 100 percent of the dry density for that material when tested in accordance with AASHTO T180, Method D. If a layer formed from reclaimed miscellaneous aggregate containing bituminous concrete is placed as pervious structure backfill, the wet density of this layer after compaction shall not be less than 100 percent of the wet density of that material when tested in accordance with AASHTO T180, Method D.

In this test, material retained on the ¾ inch sieve shall be replaced with material retained on the number 4 sieve, as noted as an option in the specifications for this test.

Each layer of the pervious structure backfill shall be compacted at optimum moisture content. No Subsequent layer shall be placed until the specified compaction is obtained for the pervious layer.

2.16.04 Method of Measurement: Payment lines for pervious structure backfill shall coincide with the limits of the compacted pervious structure backfill as actually placed and ordered by the Engineer. There shall be no direct payment for bagged stone, but the cost thereof shall be considered as included in the cost of the work for "Pervious Structure Backfill".

2.16.05 Basis of Payment: Pervious structure backfill will be paid for the contract unit price per cubic yard for "Pervious Structure Backfill", complete in place.

Pay Item	Pay Unit
Pervious Structure Backfill	C.Y.

ITEM #0406005A – PAVEMENT REPLACEMENT PERMANENT

Description: This item shall consist of the replacement of full depth bituminous concrete pavement needed for the retaining wall construction, curb installation, drainage installation and pavement widening where shown and where directed by the Engineer. This work includes sawcutting existing bituminous concrete, the furnishing and placement of processed aggregate base, tack coat and bituminous concrete.

Materials: Bituminous concrete shall conform to the provisions of Section M.04 of the Standard Specifications, as amended.

Processed aggregate base shall conform to the provisions of Article M.05.01 of the Standard Specifications.

Construction Methods: Roadway excavation and grading shall be performed in accordance with the provisions of Article 2.02.03 of the Standard Specifications.

Trench excavation and backfill shall be performed in accordance with the provisions of Article 2.05.03 of the Standard Specifications.

Processed aggregate base shall be construction in accordance with the provisions of Article 3.04.03 of the Standard Specifications.

Bituminous concrete courses shall be constructed in accordance with the provisions of Article 4.06.03 of the Standard Specifications.

Method of Measurement: This work will be measured for payment by the actual number of square yards of completed permanent pavement replacement.

Basis of Payment: This work will be paid for at the Contract unit price per square yard for "Pavement Replacement Permanent" complete in place, which price shall include pavement cutting, compacted processed aggregate base, tack coat, bituminous concrete and all equipment, tools, labor and materials incidental thereto.

Pay Item	Pay Unit
Pavement Replacement Permanent	SY

ITEM #0406267A - MILLING OF HOT MIX ASPHALT -(HMA) – (0- 4 INCHES)

Description: This work shall consist of the milling, removal, and disposal of existing HMA pavement.

Materials: The existing HMA surface shall be disposed of offsite by the Contractor at an approved disposal facility unless otherwise stated in the contract documents.

Construction Methods: The Contractor shall remove the HMA material using means acceptable to the Engineer. The pavement surface shall be removed to the line, grade, and existing or typical cross-section shown on the plans or directed by the Engineer.

The equipment for milling the pavement surface shall be designed and built for milling flexible pavements. It shall be self propelled with sufficient power, traction, and stability to maintain depth and slope and shall be capable of removing the existing HMA pavement.

The milling machine shall be equipped with a built-in automatic grade averaging control system that can control the longitudinal profile and the transverse cross-slope to produce the specified results. The longitudinal controls shall be capable of operating from any longitudinal grade reference, including string line, contact ski (30 feet minimum), non-contact ski (20 feet minimum), or mobile string line (30 feet minimum). The transverse controls shall have an automatic system for controlling cross-slope at a given rate. The Engineer may waive the requirement for automatic grade or slope controls where the situation warrants such action.

The rotary drum of the machine shall utilize carbide tip tools spaced not more than ⅝ inches apart. The forward speed of the milling machine shall be limited to no more than 45 feet/minute. The tools on the revolving cutting drum must be continually maintained and shall be replaced as warranted to provide a uniform pavement texture. The Contractor may request to perform a test strip to demonstrate that the same surface tolerance can be attained at an increased forward speed. The test strip shall be a maximum length of 500 feet and shall have the same criteria for surface tolerance as noted in this specification. The final decision for implementing the increased forward speed will be at the discretion of the Engineer.

The machine shall be equipped with an integral pickup and conveying device to immediately remove material being milled from the surface of the roadway and discharge the millings into a truck, all in one operation. The machine shall also be equipped with a means of effectively limiting the amount of dust escaping from the milling and removal operation.

Formatted: Font: 11 pt

Formatted: Font: 11 pt

Formatted: Font: 11 pt

~~301-092~~ ~~Item No.~~ITEM ~~#~~ 0406267A

~~Item No. 0406268A~~

~~Item No. 0406269A~~

When milling smaller areas or areas where it is impractical to use the above described equipment, the use of a lesser equipped milling machine may be permitted when approved by the Engineer.

Protection shall be provided around existing catch basin inlets, manholes, utility valve boxes, and any similar structures. Any damage to such structures as a result of the milling operation is the Contractor's responsibility and shall be repaired at the Contractor's expense.

To prevent the infiltration of milled material into the storm drainage system, the Contractor shall take special care to prevent the milled material from falling into the inlet openings or inlet grates. Any milled material that has fallen into inlet openings or inlet grates shall be removed at the Contractor's expense.

Surface Tolerance: The milled surface shall provide a satisfactory riding surface with a uniform textured appearance. The milled surface shall be free from gouges, longitudinal grooves and ridges, oil film, and other imperfections that are a result of defective equipment, improper use of equipment, or poor workmanship. The Contractor, under the direction of the inspector, shall perform random spot-checks with a Contractor supplied ten-foot straightedge to verify surface tolerances at a minimum of five locations per day. The variation of the top of two ridges from the testing edge of the straightedge, between any two ridge contact points, shall not exceed ⅜ inch. The variation of the top of any ridge to the bottom of the groove adjacent to that ridge shall not exceed ⅜ inch. Any unsatisfactory surfaces produced are the responsibility of the Contractor and shall be corrected at the Contractor's expense and to the satisfaction of the Engineer.

The depth of removal will be verified by taking a measurement every 250 feet per each pass of the milling machine, or as directed by the Engineer. These depth measurements shall be used to monitor the average depth of removal.

Where a surface delamination between HMA layers or a surface delamination of HMA on Portland cement concrete causes a non-uniform texture to occur, the depth of milling shall be adjusted in small increments to a maximum of a +/- ½ inch to eliminate the condition.

When removing a HMA pavement entirely from an underlying Portland cement concrete pavement, all of the HMA pavement shall be removed leaving a uniform surface of Portland cement concrete, unless otherwise directed by the Engineer.

Any unsatisfactory surfaces produced by the milling operation are the Contractor's responsibility and shall be corrected at the Contractor's expense and to the satisfaction of the Engineer.

No vertical faces, transverse or longitudinal, shall be left exposed to traffic unless it meets the requirements below. This shall include roadway structures (catch basins,

~~301-092~~ ~~Item No.~~ITEM ~~#~~ 0406267A

~~Item No. 0406268A~~

~~Item No. 0406269A~~

Formatted: Font: 11 pt

Formatted: Font: 11 pt

Formatted: Font: 11 pt

manholes, utility valve boxes, etc.). If any vertical face is formed in an area exposed to traffic a temporary paved transition will be established according to the requirements shown on the plans. If the milling machine is used to form a temporary transition, the length of the temporary transition shall conform to Special Provision Section 4.06 - Bituminous Concrete, "Transitions for Roadway Surface", the requirements shown on the plans, or as directed by the Engineer. At all permanent limits of removal, a clean vertical face shall be established by saw cutting prior to paving.

Roadway structures shall not have a vertical face of greater than 1 inch exposed to traffic as a result of milling. All structures within the roadway that are exposed to traffic and greater than 1 inch above the milled surface shall receive a transition meeting the following requirements:
For roadways with a posted speed limit of 35 mph or less*:

1. Round structures with a vertical face of greater than 1 inch to 2.5 inches shall be transitioned with a hard rubber tapered protection ring of the appropriate inside diameter designed specifically to protect roadway structures.
2. Round structures with a vertical face greater than 2.5 inches shall receive a transition of bituminous concrete formed at a minimum 24 to 1 taper.
3. All rectangular structures shall receive a transition of bituminous concrete formed at a minimum 24 to 1 taper.

*Bituminous concrete tapers at a minimum 24 to 1 taper may be substituted for the protection rings if approved by the Engineer.

For roadways with a posted speed limit of greater than 35 mph:

1. All structures shall receive a transition of bituminous concrete meeting the temporary transition requirements in Special Provision Section 4.06- Bituminous Concrete, "Transitions for Roadway Surface".

The milling operation shall proceed in accordance with the requirements of the "Maintenance and Protection of Traffic" and "Prosecution and Progress" specifications, or other contract requirements. The more stringent specification shall apply.

Prior to opening an area which has been milled to traffic, the pavement shall be thoroughly swept with a sweeper. The sweeper shall be equipped with a water tank and be capable of removing the millings and loose debris from the surface. Other sweeping equipment may be provided in lieu of the sweeper where acceptable by the Engineer.

Any milled area that will not be exposed to live traffic for a minimum of 48 hours prior to paving shall require a vacuum sweeper truck in addition to, or in lieu of, mechanical sweeping. The vacuum sweeper truck shall have sufficient power and capacity to completely remove all millings from the roadway surface including any fine particles within the texture of the milled surface. Vacuum sweeper truck hose attachments shall be

Formatted: Font: 11 pt

Formatted: Font: 11 pt

Formatted: Font: 11 pt

~~301-092~~ ~~Item No.~~ITEM ~~#~~ 0406267A

~~Item No. 0406268A~~

~~Item No. 0406269A~~

used to clean around pavement structures or areas that cannot be reached effectively by the main vacuum. Compressed air may be used in lieu of vacuum attachments if approved by the Engineer.

Method of Measurement: This work will be measured for payment by the number of square yards of area from which the milling of asphalt has been completed and the work accepted. No area deductions will be made for minor unmilled areas such as catch basin inlets, manholes, utility boxes and any similar structures.

The depth of removal will be calculated by taking a measurement at a minimum every 250 feet per each pass of the milling machine, or as directed by the Engineer. The average depth of each section will determine which payment item is applicable.

Basis of Payment: This work will be paid for at the contract unit price per square yard for "Milling of HMA (0 to 4 inches)~~ (greater than 4 to 8 inches) (greater than 8 inches)~~". This price shall include all equipment, tools, labor, and materials incidental thereto.

No additional payments will be made for multiple passes with the milling machine to remove the bituminous surface.

No separate payments will be made for cleaning the pavement prior to paving; providing protection and doing handwork removal of bituminous concrete around catch basin inlets, manholes, utility valve boxes and any similar structures; repairing surface defects as a result of the Contractors negligence; providing protection to underground utilities from the vibration of the milling operation; removal of any temporary milled transition; removal and disposal of millings; furnishing a sweeper and sweeping after milling. The costs for these items shall be included in the contract unit price.

Pay Item	**Pay Unit**
Milling of Hot Mix Asphalt (HMA) – (0- 4 inches)	Sq. Yd
~~Milling of Hot Mix Asphalt (HMA) – (greater than 4 to 8 inches)~~	~~Sq. Yd~~
~~Milling of Hot Mix Asphalt (HMA) (greater than 8 inches)~~	~~Sq. Yd~~

~~301-092~~ ~~Item No.~~ITEM ~~#~~ 0406267A

~~Item No. 0406268A~~

~~Item No. 0406269A~~

Formatted: Font: Bold
Formatted: Font: Bold, Underline
Formatted: Font: Bold
Formatted: Font: Bold, Underline
Formatted: Font: Bold
Formatted: Font: 11 pt
Formatted: Font: 11 pt
Formatted: Font: 11 pt

ITEM #0406270A - MILLING OF BITUMINOUS CONCRETE (0” TO 6”)

4.06.01 Description: This work shall consist of the milling, removal, and disposal of existing bituminous concrete pavement. It shall be performed in accordance with these specifications and in conformity with the line, grade, and typical cross-section shown on the plans.

Unless otherwise specified, the milled material shall become the property of the Contractor.

4.06.02 Milling Equipment: The equipment for milling the pavement surface shall be designed and built for milling flexible pavements and shall have a minimum 6 foot cutting width. It shall be self-propelled with sufficient power, traction, and stability to maintain depth and slope and shall be capable of removing the existing bituminous concrete pavement to the line, grade, and typical cross-section shown on the plans.

The milling machine shall be equipped with a built in automatic grade control system that can control the longitudinal profile and the transverse cross-slope to produce the specified results. The longitudinal controls shall be capable of operating from any longitudinal grade reference, including string line, ski (30 feet minimum), mobile string line (30 foot minimum), or matching shoe. The transverse controls shall have an automatic system for controlling cross-slope at a given rate.

The machine shall be capable of operating at a minimum speed of 10 feet per minute and be able to provide a 0 to 4 inch deep cut (minimum) in one pass. It shall be designed so that the operator can at all times observe the milling operation without leaving the control area of the machine.

The teeth on the revolving cutting drum must be continually maintained and shall be replaced as warranted to provide a uniform pavement texture.

The machine shall be equipped with an integral pickup and conveying device to immediately remove material being milled from the surface of the roadway and discharge the millings into a truck, all in one operation. The machine shall also be equipped with a means of effectively limiting the amount of dust escaping from the milling and removal operation in accordance with Local, State, and Federal air pollution control laws and regulations.

When milling smaller areas or areas where it is impractical to use the above described equipment, the use of a smaller or lesser equipped milling machine may be permitted when approved by the Engineer.

A sweeper equipped with a water tank, spray assembly to control dust, a pick-up broom, a dual gutter broom, and a dirt hopper shall be provided by the Contractor. The sweeper shall be capable of removing millings and loose debris from the textured pavement. Other sweeping equipment may be provided in lieu of the sweeper when approved by the Engineer.

4.06.03 Construction Methods: The pavement surface shall be removed to the line, grade, and typical cross-section shown on the plans. The milling operation shall proceed in accordance with the requirements of the "Maintenance and Protection of Traffic" and "Prosecution and Progress" specifications.

The milled surface shall provide a satisfactory riding surface with a uniform textured appearance. The milled surface shall be free from gouges, excessive longitudinal grooves and ridges, oil film, and other imperfections that are a result of defective equipment, improper use of equipment, or poor workmanship. Any unsatisfactory surfaces produced are the responsibility of the Contractor and shall be corrected at the Contractor's expense and to the satisfaction of the Engineer.

When removing a bituminous concrete pavement from an underlying Portland cement concrete pavement, all of the bituminous concrete pavement shall be removed to the greatest extent practicable, leaving a uniform surface of Portland cement concrete, unless otherwise directed by the Engineer.

Unless otherwise specified, milling shall be done to improve ride ability and/or cross-slope. The existing pavement shall be removed to the average depth shown on the plans, in a manner that will restore the pavement surface to a uniform cross-section and longitudinal profile. The longitudinal profile of the milled surface shall be established by a stringline, mobile stringline, or mobile ski. The cross-slope of the milled surface shall be established by a second sensing device or by an automatic cross-slope control mechanism. The Contractor will be responsible for providing all grades necessary to remove the material to the proper line, grade, and typical cross-section shown on the plans. The Engineer may waive the requirement for automatic grade or slope controls where the situation warrants such action.

Protection shall be provided around existing catch basin inlets, manholes, utility valve boxes, and any similar structures. Any damage to such structures as a result of the milling operation is the Contractor's responsibility and shall be repaired at the Contractor's expense.

To prevent the infiltration of milled material into the storm sewer system the Contractor shall take special care to prevent the milled material from falling into the inlet openings or inlet grates. Any milled material that has fallen into inlet openings or inlet grates shall be removed at the Contractor's expense.

At all permanent limits of milling, a clean vertical face shall be established prior to paving. No vertical faces, transverse or longitudinal, shall be left exposed to traffic. If any vertical face is formed in an area exposed to traffic a temporary paved transition will be established according to the requirements shown in the Special Provision Section 4.06 – Bituminous Concrete, "Transitions for Roadway Surface." If a vertical face is not formed and the milling machine is used to temporarily transition the milled pavement surface to the existing pavement surface, the

length of the temporary transition shall conform to the requirements shown in the Special Provision Section 4.06 – Bituminous Concrete, "Transitions for Roadway Surface."

Prior to opening an area which has been milled to traffic, the pavement shall be thoroughly swept with a sweeper or other approved equipment to remove, to the greatest extent practicable, material which will become airborne under traffic. This operation shall be conducted in a manner so as to minimize the potential for creation of a traffic hazard and to comply with local, State, and Federal air pollution control laws and regulations. Any damage done to traffic as a result of milled material becoming airborne is the responsibility of the Contractor and shall be repaired at the Contractor's expense.

The milled surface will be tested with a 10-foot straightedge furnished by the Contractor. The variation of the top of ridges from the testing edge of the straightedge, between any two ridge contact points, shall not exceed 3/8 inch. The variation of the top of any ridge from the bottom of the groove adjacent to that ridge shall not exceed 3/8 inch. Any point in the surface not meeting these requirements shall be corrected as directed by the Engineer at the Contractor's expense.

The Contractor may be waived of the straightedge surface requirements stated in the preceding paragraph in areas where a surface lamination between bituminous concrete layers or a surface lamination of bituminous concrete on Portland cement concrete causes a non-uniform texture to occur. This is subject to the approval of the Engineer.

4.06.04 Method of Measurement: This work will be measured for payment by the number of square yards of area from which the milling of asphalt has been completed and the work accepted. No area deductions will be made for minor unmilled areas such as catch basin inlets, manholes, utility boxes and any similar structures.

The depth of removal will be verified by taking a measurement every 250 feet per each pass of the milling machine, or as directed by the Engineer. These depth measurements shall be used to calculate the average depth of removal. This average depth will be used as the depth for payment.

4.06.05 Basis of Payment: This work will be paid for at the contract unit price per square yard for "Milling of Bituminous Concrete (0" to 6")". This price shall include all equipment, tools, labor, and materials incidental thereto.

No additional payments will be made for multiple passes with the milling machine to remove the bituminous surface.

No separate payments will be made for cleaning the pavement prior to paving; providing protection and doing handwork removal of bituminous concrete around catch basin inlets, manholes, utility valve boxes and any similar structures; repairing surface defects as a result of

the Contractor's negligence; providing protection to underground utilities from the vibration of the milling operation; removal of any temporary milled transition; removal and disposal of millings; furnishing a sweeper and sweeping after milling. The costs for these items shall be included in the contract unit price.

Pay Item	**Pay Unit**
Milling of Bituminous Concrete (0" to 6")	S.Y.

ITEM #0406999A - ASPHALT ADJUSTMENT COST

The Asphalt Price is available on the Department of Transportation web site at:

http://www.ct.gov/dot/asphaltadjustment

The asphalt adjustment cost will be based on the variance in price for the performance-graded binder component of hot mix asphalt (HMA), Polymer Modified Asphalt (PMA), and Ultra-Thin Bonded Hot-Mix Asphalt mixtures completed and accepted in the contract.

An asphalt adjustment cost will be applied only if all of the following conditions are met:

I. For HMA and PMA mixtures:

a. The HMA or PMA mixture in which the adjustment is being applied is listed as a contract item with a pay unit of tons or metric tons.

b. The total quantity for all HMA and PMA mixtures in a contract or individual purchase order (Department of Administrative Service contract awards) exceeds 1000 tons or more.

c. The difference between the posted *Asphalt Base Price* and *Asphalt Period Price* varies by more than $5.00.

II. For Ultra-Thin Bonded HMA mixtures:

a. The Ultra-Thin Bonded HMA mixture in which the adjustment is being applied is listed as a contract item.

b. The total quantity for Ultra-Thin Bonded HMA mixture in a contract exceeds:

i. 800 tons (727 metric tons) if Ultra-Thin Bonded HMA is listed as a contract item with a pay unit of tons or metric tons.

ii. 30,000 square yards (25,080 square meters) if Ultra-Thin Bonded HMA is listed as a contract item with a pay unit of square yards or square meters.

Note: The quantity of Ultra-Thin Bonded HMA measured in tons shall be determined from the material documentation requirements set forth in the Ultra-Thin Bonded HMA Special Provision.

c. The difference between the posted *Asphalt Base Price* and *Asphalt Period Price* varies by more than $5.00.

d. No Asphalt Adjustment Cost shall be applied to the liquid emulsion that is specified as part of the Ultra-Thin Bonded HMA mixture system.

III. Regardless of the binder used in all HMA and/or PMA mixtures, the Asphalt Adjustment Cost will be based on PG 64-22.

The Connecticut Department of Transportation (ConnDOT) shall post on its website, the average per ton selling price (asphalt price) of the performance-graded binder. The average is based on the high and low selling price published in the most recent available issue of the **Asphalt Weekly Monitor®** furnished by Poten & Partners, Inc. under the "East Coast Market – New England, New Haven, Connecticut area", F.O.B. manufacturer's terminal.

The selling price furnished from the Asphalt Weekly Monitor ® is based on a standard ton (US$/ST). The metric ton price is determined by applying a factor of 1.1023 (US$/ST x 1.1023 = US$/mton). Example: $150.00/ton x 1.1023 = $165.34/mton

Formula: HMA x $\frac{PG\%}{100}$ x [(*Period Price - Base Price*] = $ ____ , where

- **HMA:**
  1. For HMA, PMA, and Ultra-Thin Bonded HMA mixtures with pay units of mass: The quantity (tons or metric tons) of accepted HMA, PMA, or Ultra-Thin Bonded HMA mixture measured and accepted for payment.
  2. For Ultra-Thin Bonded HMA mixtures with pay units of area: The quantity of Ultra-Thin Bonded HMA mixture delivered, placed, and accepted for payment, calculated in tons or metric tons as documented according to the Material Documentation provision (section E) of the Ultra-Thin Bonded HMA Special Provision.

- ***Asphalt Base Price***: The asphalt price that is posted on the ConnDOT website 28 days before the actual bid opening posted.

- ***Asphalt Period Price***: The asphalt price that is posted on the ConnDOT website for the period in which the HMA, PMA mixture is placed.

- Performance-Graded Binder percentage (**PG%**)

  1. For HMA or PMA mixes:
     PG% = 4.5
     - For Superpave 37.5mm (1.5 inch), Superpave 25.0mm (1.0 inch), PMA S1, HMA S1, and Class 4

       PG % = 5.0
     - For Superpave 12.5mm (0.50 inch), HMA S0.5 and Class 1.

       PG % = 6.0
     - For Superpave 0.375 inch (9.5mm), HMA S0.375, Superpave 6.25mm (0.25 inch), HMA S0.25, Superpave 4.75mm (#4) and Class 2.

2. For Ultra-Thin Bonded HMA mixes:
   PG% = Design % PGB (Performance Graded Binder) in the approved job mix formula, expressed as a percentage to one decimal point (e.g. 5.1%)

The adjustment shall not be considered as a changed condition in the contract because of this provision and because the Contractors are being notified before submission of bids.

Basis of Payment: The "Asphalt Adjustment Cost" will be calculated using the formula indicated above. A payment will be made for an increase in costs. A deduction from monies due the Contractor will be made for a decrease in costs.

The sum of money shown on the estimate, and in the itemized proposal as "Estimated Cost", for this item will be considered the bid price although payment will be made as described above. The estimated cost figure is not to be altered in any manner by the bidder. If the bidder should alter the amount shown, the altered figure will be disregarded and the original cost figure will be used to determine the amount of the bid for the Contract.

Pay Item	**Pay Unit**
Asphalt Adjustment Cost	EST.

ITEM #0502182A - RUBBER GRADE CROSSING

Description: Work under this item shall consist of furnishing full depth rubber grade crossing material for track crossings with timber or concrete ties at access points shown on the plans or as identified under the "CONSTRUCTION ACCESS" item.

Materials: Materials shall conform to the following as specified by Metro-North Railroad:

Specifications for Rubber Crossings for Concrete Ties

Elastomer Classification:	ASTM D2000
Tensile Strength	ASTM D412, 2,000 psi
Hardness:	ASTM D2240 55-75 Durometer Shore A
Ultimate Elongation:	ASTM D412, 350% Min.
Resistance to Ozone Cracking:	ASTM D1171, C12
Accelerated Aging:	ASTM D573, A13
Fasteners Used in Crossing:	Pandrol Fast Clips
Field Panels:	Must be full depth rubber panels with width to match Metro-North Standard Concrete Cross Tie (enclosed drawing). Panels must interlock and be capable of installation without use of lag screws.
Gauge Panels:	Must be full depth rubber panels that encompass the gauge of the track from inside web of both rails (see enclosed drawings for Metro-North Railroad Standard Concrete Cross-Tie). Panels must interlock and be capable of installation without use of lag screws.
End Ramps (deflector plates):	To be included in price and needed for all crossings.

Specifications for Rubber Crossings for Timber Ties

Similar as for Rubber Crossings for Concrete Ties with following exceptions:

Fasteners Used In Crossing:	Track spikes
Width of Field Panels:	20" for 8'-6" Cross Tie

Materials shall be supplied by the following vendors or an approved equal:

Hi-Rail, Inc.
2539 Woodcliff Court
Lisle, Ill 60532
(630) 961-1659

Railway, Inc
120 Nixon Street
P.O. Box 849
Cascade, Iowa 52033
(319) 852-7794

Omni Grade Crossing, Inc.
Radnor Station Building #1, Suite 300
290 King of Prussia
Radnor, PA 19087
(610) 971-9966

The Contractor shall submit shop drawings of the Rubber Crossing for Timber or Concrete Ties to the Railroad for their review and approval. The crossing panels shall be full depth with the height of panel matching the rail size for the crossing location.

The contractor shall confirm which tracks have wood or concrete ties.

Contractor shall provide rubber crossing pads at each location as noted below (see photo's below):

1. Riverside Railroad Station – Access Point "A" – Remove existing pads and replace with 40 LF of new pad on Track 3 and 40 LF on Track 1. Access Point "B" is existing and will be available to the Contractor. Roadway access for Tracks 3 & 1 is from the north lot of the station and roadway access for Tracks 2 & 4 is from the south lot of the station.
2. Old Greenwich Station – Access Point "C" – use existing pads on Tracks #3 & #1, install new 40 LF long pads on Tracks #2 & #4. Roadway access is through north lot of station.
3. East of Tomac Avenue Railroad Bridge – Access Point "D" is only a 4 track pad with no roadway access. Install new 40 LF long pads on Tracks 4,2,1 & 3. Contractor will have to mount equipment at Old Greenwich Station Access Point "C" and travel east to Access Point "D" for easterly work at Tomac Avenue with bridge spans removed.

Construction Methods: The Contractor shall procure and deliver the rubber crossing material to the project site. The Contractor shall coordinate the delivery location with Metro-North Railroad. Installation of rubber crossing(s) shall be performed by Metro-North Railroad. There will be no charge to the Contractor for this installation work. Installation locations may be adjusted by the Engineer with the approval of the railroad.

Method of Measurement: Rubber Grade Crossing(s) shall be measured for payment per linear foot of rubber crossing supplied, as measured along the centerline of the track. The deflector plates shall not be included in the above measurement.

Basis of Payment: This work will be paid for at the contract unit price per linear foot for "Rubber Grade Crossing", of the required depth and width, which price shall be for materials and delivery only.

No additional payment will be made for the required gauge and field deflector plates which price shall be considered incidental to the cost of the rubber grade crossing.

Pay Item	**Pay Unit**
RUBBER GRADE CROSSING	LF

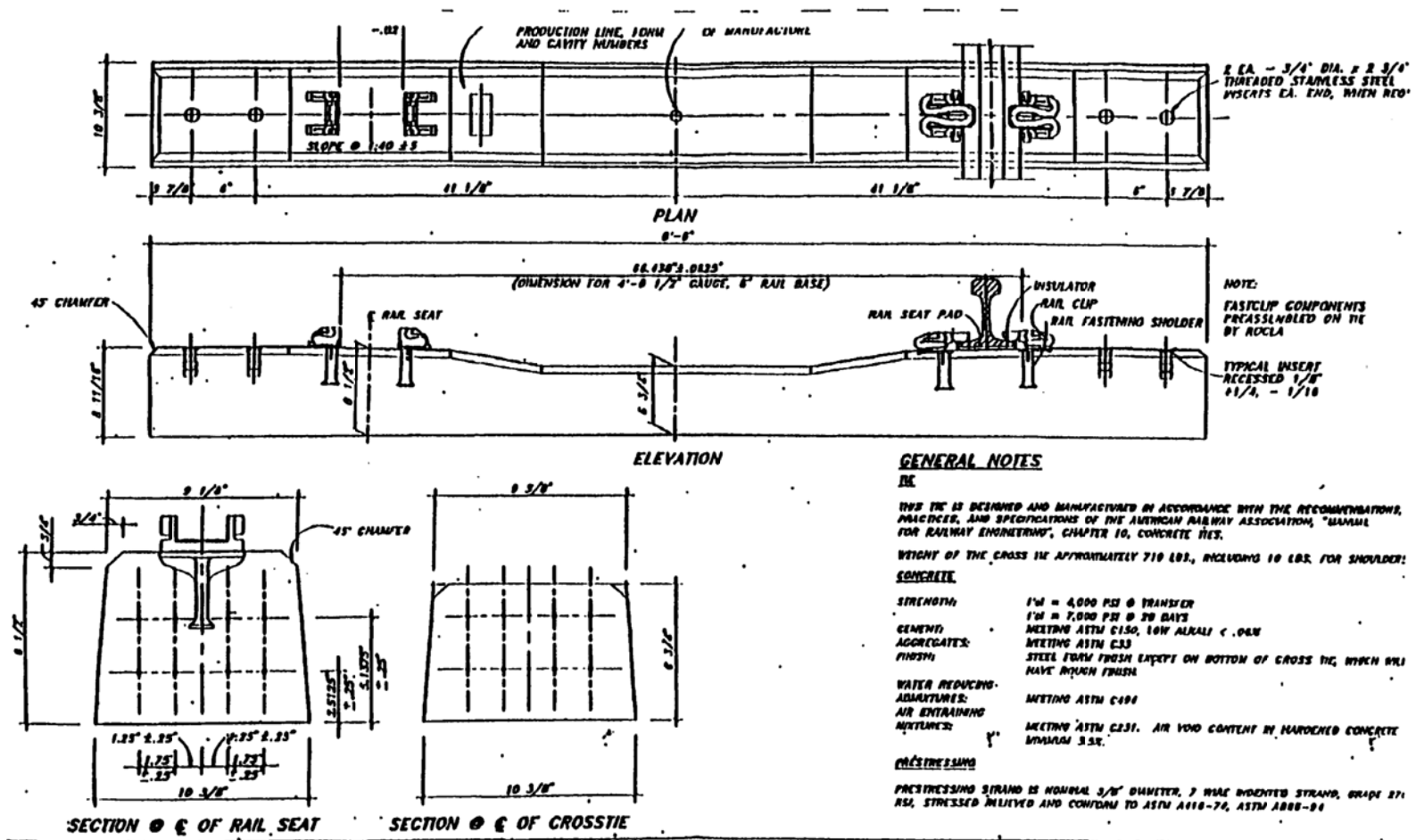

GENERAL NOTES

TIE

THIS TIE IS DESIGNED AND MANUFACTURED IN ACCORDANCE WITH THE RECOMMENDATIONS, PRACTICES, AND SPECIFICATIONS OF THE AMERICAN RAILWAY ASSOCIATION, "MANUAL FOR RAILWAY ENGINEERING", CHAPTER 10, CONCRETE TIES.

WEIGHT OF THE CROSS TIE APPROXIMATELY 710 LBS., INCLUDING 10 LBS. FOR SHOULDER.

CONCRETE

STRENGTH:	f'ci = 4,000 PSI @ TRANSFER f'c = 7,000 PSI @ 28 DAYS
CEMENT:	MEETING ASTM C150, LOW ALKALI < .06%
AGGREGATES:	MEETING ASTM C33
FINISH:	STEEL FORM FINISH EXCEPT ON BOTTOM OF CROSS TIE, WHICH WILL HAVE ROUGH FINISH.
WATER REDUCING ADMIXTURES:	MEETING ASTM C494
AIR ENTRAINING MIXTURES:	MEETING ASTM C231. AIR VOID CONTENT IN HARDENED CONCRETE MINIMUM 3%.

PRESTRESSING

PRESTRESSING STRAND IS NOMINAL 3/8" DIAMETER, 7 WIRE INDENTED STRAND, GRADE 270 KSI, STRESSED RELIEVED AND CONFORMS TO ASTM A416-74, ASTM A882-84

COPYRIGHT RESERVED (1990)
This drawing is the property of Rocla Concrete Tie, Inc. and is subject to return upon demand. It is submitted for use only in connection with proposals or contracts of this organization upon the express condition that it is not to be used directly or indirectly in any way detrimental to the interests of Rocla Concrete Tie, Inc. This drawing may not be copied or given to other parties without the expressed written approval of Rocla Concrete Tie, Inc.

02 JAN 90
PANDROL FASTCLIP 6" RAILBASE
COMM. FCLIP.

Rocla Concrete Tie, Inc.

CROSS TIE FOR METRO-NORTH RAILROAD
STANDARD CONCRETE CROSSTIE
DWG. NO. 86-001

RIVERSIDE RAILROAD STATION, GREENWICH

OLD GREENWICH STATION, GREENWICH

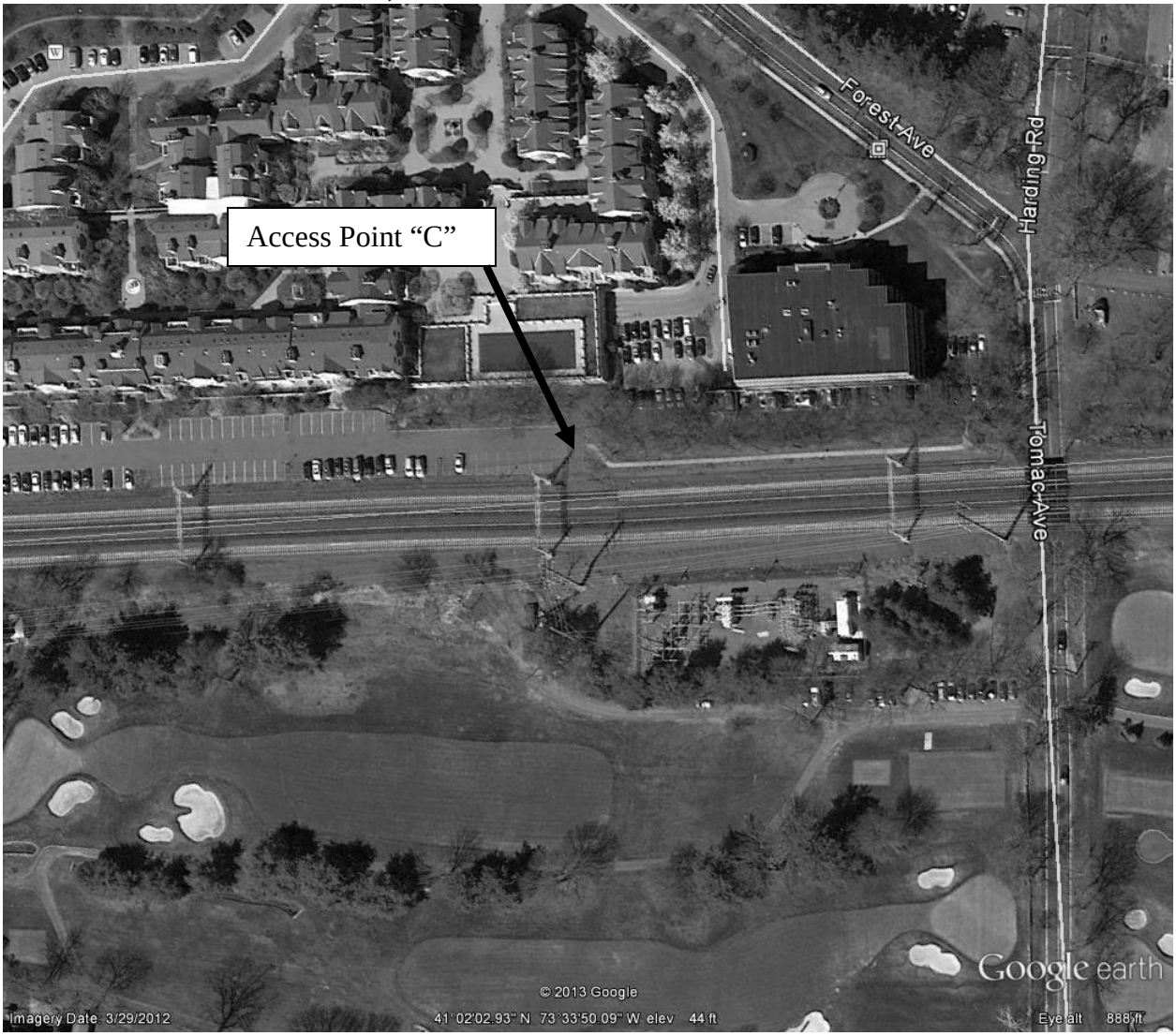

TOMAC AVENUE, GREENWICH

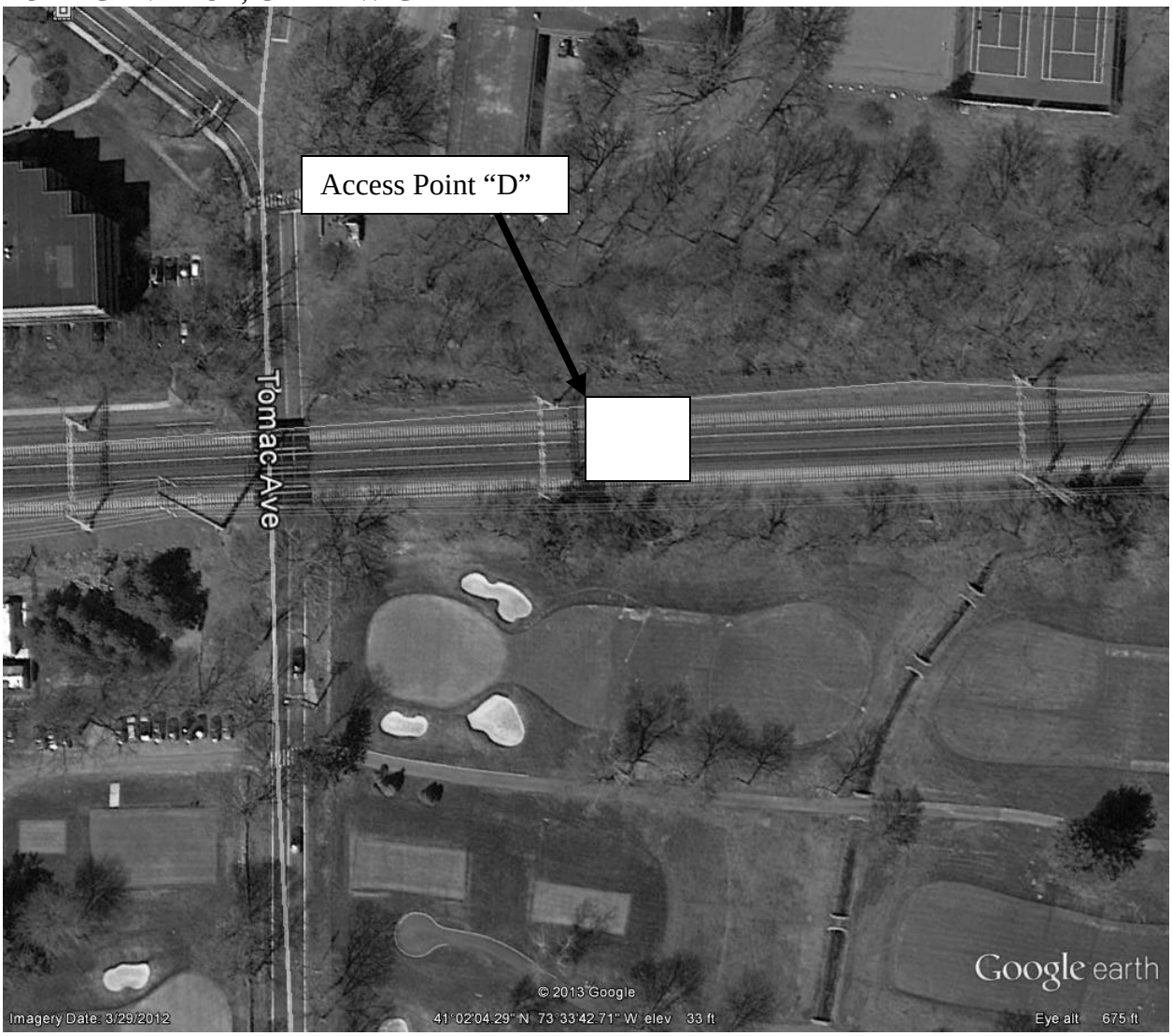

ITEM #0502235A - LIGHTED PEDESTRIAN SIDEWALK ENCLOSURES

5.02.01 Description: Work under this task shall consist of the installation, maintenance, dismantling, re-installation, maintenance, and removal of lighted pedestrian sidewalk enclosures for the safe passage of pedestrian and handicap traffic along Sound Beach Avenue in accordance with all stages of construction for the Sound Beach Avenue Railroad Bridge. The lighted enclosures shall be at least four (4) feet wide and eight (8) feet high. Under this item the Contractor shall provide signage, protective fencing, traversable surface and other methods as required to assure the safety and passage of all pedestrian and handicap traffic (i.e. wheel chairs), within the limits of construction during all stages of work.

5.02.02 Materials: The materials for this work shall conform to the intended use of allowing pedestrian and handicap traffic to traverse Sound Beach Avenue. Materials shall be of satisfactory quality to perform its function. Materials and installation of the sidewalk enclosures shall not be permitted unless the Engineer has approved them. A State of Connecticut registered Professional Engineer shall design the sidewalk enclosures. The enclosure shall be capable of sustaining a vertical load of 150 pounds per square foot and horizontal load of 30 pounds per square foot. Computations must be submitted for approval.

5.02.03 Construction Methods: The Contractor shall maintain at least one passageway along Sound Beach Avenue during the installation of the sidewalk enclosure. The manner of construction shall be consistent with the installation submitted by the Contractor, upon approval of the Engineer. Installation must be complete prior to commencement of the bridgework. The Contractor shall remove and reset the sidewalk enclosure at each stage of construction as needed. However, the Contractor shall maintain one passageway along Sound Beach Avenue Avenue open at all times.

5.02.04 Method of Measurement: This item will not be measured for payment and will be paid on a lump sum basis. The Contractor shall submit a schedule of values for Basis of Payment.

5.02.05 Basis of Payment: This work will be paid for at the contract lump sum for "Lighted Pedestrian Sidewalk Enclosures", which price shall include all equipment, power, tools, and labor, incidental to the completion of the work.

Pay Item	Pay Unit
Lighted Pedestrian Sidewalk Enclosures	L.S.

ITEM #0503151A - REMOVAL OF SUPERSTRUCTURE (SITE NO. 1)

Work under this item shall conform to the requirements of Section 5.03 amended as follows:

5.03.01 - Description: Delete the first two paragraphs and replace with the following:

Work under this item shall consist of the removal and satisfactory disposal of the superstructure and pier including foundation. Those items to be removed and disposed of shall include, but not be limited to, steel girders, concrete encasement, steel brackets, steel columns and bracing, concrete encasement, abandoned utility conduits, safety walks, bridge railing, rail, and bearings as shown on the plans or as directed by the Engineer.

Work under this item shall also consist of removing, containing, and collecting existing paint from all areas of steel superstructure and portion of steel substructure where the Contractor will use flamecutting, arc gouging, or welding for the structure demolition, because of the possible presence of lead in the existing paint. The lead removal is required to comply with OSHA Regulation Nos. 1926.353, 1926.354, and 1926.62. Additional information on lead removal and definitions of the terms used within this special provision may be obtained from the latest edition of the "SSPC 6I Guide for Containing Debris Generated During Paint Removal Operations."

Work under this item also consists of storage of the paint debris collected under this item.

5.03.02 - Materials: N/A

5.03.03 - Construction Methods: Add the following:

1 - Amount of Paint Removal: Prior to applying the heat of welding equipment to localized areas of steel superstructure or substructure, the existing paint shall be removed to a minimum of 6 inches from wherever the heat will be applied, and as directed by the Engineer.

2 - Methods of Paint Removal: Where required, the existing paint shall be removed by chemical stripping, needle guns with vacuum attachments, or by any of the closed abrasive blast cleaning techniques described in SSPC Guide 6I. Open abrasive blast cleaning will not be permitted. All of the debris resulting from the paint removal operations shall be contained, collected, and stored in leakproof storage containers placed on wooden pallets. A test patch shall be done on the existing steel to demonstrate the Contractor's proposed methods of paint removal to the satisfaction of the Engineer.

The Contractor is advised that chemical paint removers may require several days and multiple applications to completely remove the existing paint, especially in temperatures below 50° F.

The Contractor is also advised that chemical paint strippers may not be effective in removing some paints.

3 - Removal of Superstructure and Pier: All work shall proceed as directed by and to the satisfaction of the Engineer in accordance with the Construction Staging shown on the plans and the requirements of the Special Provisions "Maintenance and Protection of Traffic" and "Prosecution and Progress", contained elsewhere in these Specifications.

Material that is not specified for salvage shall become the property of the Contractor and shall be removed and disposed of by him.

Material designated for salvage shall be removed by methods that shall not cause damage to the salvaged material.

The removal shall not result in damage to any permanent construction (new or existing) or to adjoining property. If any damage does occur it shall be repaired by the Contractor to the satisfaction of the Engineer at no additional expense to the State.

The Contractor shall prepare and submit to the Engineer for review working drawings, computations, and written procedures prepared by and signed and sealed by a Professional Engineer registered in the State of Connecticut for the removal of the structure to the Engineer for review in accordance with Article 1.05.02. Acceptance of the Contractor's plans shall not be considered as relieving the Contractor of any responsibility.

Disposal of lead based debris and chemical stripper residue shall be in accordance with the Special Provision “Disposal of Lead Debris”.

5.03.04 - Method of Measurement: Delete the entire article and replace with the following:

This work, being paid for on a lump sum basis, will not be measured for payment.

The Contractor shall submit a schedule of values for Basis of Payment.

5.03.05 - Basis of Payment: Delete the second and third paragraphs and replace with the following:

This work will be paid for at the contract lump sum price for "Removal of Superstructure", which price shall include the removal and disposal of the superstructure components, portions of the substructure components including the pier and foundation, the containment, removal, collection, and storage of paint debris as herein described, and all equipment, tools and labor incidental thereto.

Disposal of lead based debris and chemical stripper residue shall be paid for under item "Disposal of Lead Debris".

Pay Item	Pay Unit
Removal of Superstructure (Site No. 1)	L.S.

ITEM #0503151A

ITEM #0503152A - REMOVAL OF SUPERSTRUCTURE (SITE NO. 2)

Work under this item shall conform to the requirements of Section 5.03 amended as follows:

5.03.01 - Description: Delete the first two paragraphs and replace with the following:

Work under this item shall consist of the removal and satisfactory disposal of the superstructure. Those items to be removed and disposed of shall include, but not be limited to, steel girders, steel floorbeams, steel stringers, steel diaphragms, steel brackets, abandoned utility conduits, safety walks, bridge railing, rail, and bearings as shown on the plans or as directed by the Engineer.

Work under this item shall also consist of removing, containing, and collecting existing paint from all areas of steel superstructure and portion of steel substructure where the Contractor will use flamecutting, arc gouging, or welding for the structure demolition, because of the possible presence of lead in the existing paint. The lead removal is required to comply with OSHA Regulation Nos. 1926.353, 1926.354, and 1926.62. Additional information on lead removal and definitions of the terms used within this special provision may be obtained from the latest edition of the "SSPC 6I Guide for Containing Debris Generated During Paint Removal Operations."

Work under this item also consists of storage of the paint debris collected under this item.

5.03.02 – Materials: N/A

5.03.03 - Construction Methods: Add the following:

1 - Amount of Paint Removal: Prior to applying the heat of welding equipment to localized areas of steel superstructures, the existing paint shall be removed to a minimum of 6 inches from wherever the heat will be applied, and as directed by the Engineer.

2 - Methods of Paint Removal: Where required, the existing paint shall be removed by chemical stripping, needle guns with vacuum attachments, or by any of the closed abrasive blast cleaning techniques described in SSPC Guide 6I. Open abrasive blast cleaning will not be permitted. All of the debris resulting from the paint removal operations shall be contained, collected, and stored in leakproof storage containers placed on wooden pallets. A test patch shall be done on the existing steel to demonstrate the Contractor's proposed methods of paint removal to the satisfaction of the Engineer.

The Contractor is advised that chemical paint removers may require several days and multiple applications to completely remove the existing paint, especially in temperatures below 50° F.

The Contractor is also advised that chemical paint strippers may not be effective in removing some paints.

3 - Removal of Superstructure: All work shall proceed as directed by and to the satisfaction of the Engineer in accordance with the Construction Staging shown on the plans and the requirements of the Special Provisions "Maintenance and Protection of Traffic" and "Prosecution and Progress", contained elsewhere in these Specifications.

Material that is not specified for salvage shall become the property of the Contractor and shall be removed and disposed of by him.

Material designated for salvage shall be removed by methods that shall not cause damage to the salvaged material.

The removal shall not result in damage to any permanent construction (new or existing) or to adjoining property. If any damage does occur it shall be repaired by the Contractor to the satisfaction of the Engineer at no additional expense to the State.

The Contractor shall prepare and submit to the Engineer for review working drawings, computations, and written procedures prepared by and signed and sealed by a Professional Engineer registered in the State of Connecticut for the removal of the structure to the Engineer for review in accordance with Article 1.05.02. Acceptance of the Contractor's plans shall not be considered as relieving the Contractor of any responsibility.

Disposal of lead based debris and chemical stripper residue shall be in accordance with the Special Provision “Disposal of Lead Debris”.

5.03.04 - Method of Measurement: Delete the entire article and replace with the following:

This work, being paid for on a lump sum basis, will not be measured for payment.

The Contractor shall submit a schedule of values for Basis of Payment.

5.03.05 - Basis of Payment: Delete the second and third paragraphs and replace with the following:

This work will be paid for at the contract lump sum price for "Removal of Superstructure", which price shall include the removal and disposal of the superstructure components, portions of the substructure components, the containment, removal, collection, and storage of paint debris as herein described, and all equipment, tools and labor incidental thereto.

Disposal of lead based debris and chemical stripper residue shall be paid for under item "Disposal of Lead Debris".

Pay Item	Pay Unit
Removal of Superstructure (Site No. 2)	L.S.

ITEM #0503152A

ITEM #0506017A - RETAINING WALL

5.06.01 - Description: This item will consist of designing, furnishing and constructing a retaining wall at Site No. 1, in the location, grades, and to the dimensions and details shown on the contract drawings, and in accordance with these specifications.

This item shall also consist of furnishing and installing textured, formed concrete surfaces using form liners designed to duplicate closely the appearance of the existing natural stone masonry units at the west abutment of the Sound Beach Avenue railroad bridge, Bridge No. 03948 in Greenwich. Textured, formed concrete surfaces shall be as described herein and in accordance with these specifications. All surfaces to receive textured, formed concrete surfaces using form liners shall also receive a chemically stained concrete treatment to duplicate closely the appearance of the natural stone as described herein.

Retaining Wall Selection:

The wall chosen shall be selected from the list below:

- Prefabricated Modular Walls
- Mechanically Stabilized Earth (MSE) Walls

The Engineer will reject any proposed retaining wall that is not listed above.

The following is a list of the Department's current approved proprietary retaining walls, no other proprietary retaining walls will be allowed:

Prefabricated Modular Walls

1. Doublewal
Doublewal Corporation
7 West Main Street
Plainville, CT 06062
(860) 793-0295

2. T-Wall Retaining Wall System
The Neel Company
8328-D Traford Lane
Springfield, VA 22152
(703) 913-7858

Mechanically Stabilized Earth (MSE) Walls

1. Reinforced Earth Walls
The Reinforced Earth Company
133 Park Street
North Reading, MA 01864
(978) 664-2830

2. Isogrid Retaining Wall System
The Neel Company

3. Retained Earth
Foster Geotechnical
1372 Oldbridge Road, Suite 101
Woodbridge, VA 22192
(703) 499-9818

8328-D Traford Lane
Springfield, VA 22152
(703) 913-7858

Architectural Treatment: Retaining walls indicated as having a stone masonry architectural treatment shall be supplied with a stone masonry architectural treatment on the exterior surface within the limits shown on the plans and as specified elsewhere in the Special Provisions. Retaining walls indicated as having a stone masonry architectural treatment shall also receive a chemically stained concrete treatment within the limits shown on the plans and as specified elsewhere in the Special Provisions.

Design:

1 - Design Computations: If the Contractor chooses one of the proprietary wall options, he is fully responsible for the design, detailing and additional specifications required. The actual designer of the retaining wall shall be a qualified Professional Engineer licensed in the State of Connecticut. The designer must have designed at least three proprietary walls within the last three years. The effects of the simulated stone masonry surface shall be taken into account during the preparation of the design computations.

2 - Designer's Liability Insurance: The Designer of the proprietary retaining wall shall secure and maintain at no direct cost to the Department, a Professional Liability Insurance Policy for errors and omissions in the minimum amount of One Million Dollars ($1,000,000). The Designer may, at his election, obtain a policy containing a maximum Two Hundred Fifty Thousand Dollars ($250,000) deductible clause, but if he should obtain a policy containing such a clause, the Designer shall be liable to the extent of the deductible amount. The Designer shall obtain the appropriate and proper endorsement to its Professional Liability Policy to cover the indemnification clause in this contract as the same relates to negligent acts, errors or omissions in the work performed by the Designer. The Designer shall continue this liability insurance coverage for a period of three years from the date of the acceptance of the work by the agency head as evidenced by a certificate of acceptance issued to the contractor or for three years after the termination of the contract, whichever is earlier, subject to the continued commercial availability of such insurance.

The Designer shall supply the certificate of this insurance to the Engineer prior to the start of construction of the wall. The designer’s insurance company shall be licensed in the State of Connecticut.

3 - Preliminary Submissions for Proprietary Retaining Walls: Prior to the start of fabrication or construction, the Contractor shall submit to the Engineer a design package, which shall include, but not be limited to the following:

a. Detailed Plans:

- Plan sheets shall be approximately 22" x 34".

- Stamped by a licensed Professional Engineer (Connecticut).

- Full plan view of the wall drawn to scale. The plan view must reflect the horizontal alignment and offset from the horizontal control line to the face of the wall. Beginning and ending stations, all utilities, signs, lights, etc. that affect the construction along with all property lines and easement lines adjacent to the wall shall be shown.

- Full elevation view of the wall drawn to scale. Elevation views should indicate the elevation at the top and bottom of walls, horizontal and vertical break points, and the location of finished grade. Limits and arrangement of architectural treatment shall be included.

- Typical cross sections drawn to scale including all appurtenances. Detailed cross section should be provided at reinforcement transitions such as tops of walls and wall ends. Architectural treatment shall be included in applicable sections.

- Details of all wall components and their connections such as the length, size and type of reinforcement and where any changes occur; modular component and facing details including reinforcing steel and reinforcement connections; joint material including geotextile filter location and horizontal joint compression material, etc.

- Drainage details for embankment backfill including attachment to outlets shown on contract drawings.

- Details of any roadway drainage pipe projecting through the wall, or any attachments to the wall. Details of the treatment of drainage swales or ditches shown on the contract drawings.

- Design parameters used along with the American Railway Engineering and Maintenance-of-Way Association (AREMA) or AASHTO references.

- Material designations for all materials to be used.

- Detailed construction methods including a quality control plan. Construction quality control plans should include monitoring and testing frequencies (e,g, for setting batter and maintaining horizontal and vertical control). Construction restraints should also be listed in the details. Specific requirements for construction around obstructions should be included.

- Details of parapet attachments where required along with any lighting and/or signing requirements.

- Details of Architectural Treatment where required. Details shall include dimensions and arrangement of molded stones on the face of each modular unit.

- Details of Temporary Sheeting where required.

- Details of wall treatment where the wall abuts other structures.

- Treatment at underground utilities where required.

- Treatment at overhead utilities including details indicating a full understanding of the Northeast Utility (NU) Overhead Transmission Standards for operation of equipment under and adjacent to NU line on Rights of Way.

- Field survey and measurements of the existing grades and rights of way at the location the proposed retaining wall.

b. Design Computations:

- Stamped by a licensed Professional Engineer (Connecticut).

- Computations shall clearly refer to the applicable AREMA or AASHTO provisions as stated in the Notes on the Contract Drawings.

- Documentation of computer programs including all design parameters.

- The design shall conform to the criteria listed below.

- Effects of architectural treatment shall be included. If the effects of the architectural treatment are not included in the computations, the designer shall provide a written justification of why the effects need not be included.

c. Construction Specifications:

- Construction methods specific to the proprietary retaining wall chosen. These specifications should include construction limitations including vertical clearance, right-of-way limits, etc. Submittal requirements for materials such as certification, quality, and acceptance/rejection

criteria should be included. Details on connection of modular units and connection of reinforcements such that assurance of uniform stress transfer should be included.

- Any requirements not stated herein.

The submissions for proprietary retaining walls shall be treated as working drawings in accordance with Section 1.05 amended as follows:

a. 6 sets of each submission shall be supplied to the Department

b. The Contractor shall allow 21 days for the review of each submission. If subsequent submissions are required as a result of the review process, 21 days shall be allowed for review of each submission. No extensions in contract time will be allowed for the review of these submissions.

4 - Final Submissions for Proprietary Retaining Walls:

Once a proprietary retaining wall design has been reviewed and accepted by the Department, the Contractor shall submit the final plans. The final submission shall include one set of full size (approximately 22" x 34") mylar sheets and five sets of full size blue line copies.

The final submission shall be made within 14 days of acceptance by the Department. No work shall be performed on the retaining wall until the final submission has been received.

Acceptance of the final design shall not relieve the Contractor of his responsibility under the contract for the successful completion of the work.

The actual designer of the proprietary retaining wall is responsible for the review of any shop drawings prepared for the fabrication of the wall. One set of full size blue line copies of all approved shop drawings shall be submitted to the Department's permanent records.

5 - General Design Requirements for all Proprietary Retaining Walls

a. All designs for proprietary walls and temporary sheeting (if required) shall conform to the latest edition of the AREMA Manual for Railway Engineering and the latest edition of the American Association of State Highway and Transportation Officials (AASHTO) Standard Specifications for Highway Bridges including the latest Interims published except as noted otherwise herein.

b. The wall design shall follow the dimensions of the wall envelope shown in the contract drawings.

For all proprietary walls which incorporate a concrete leveling pad, the top of the leveling pad shall be located at or below the bottom of the footing elevation shown on the contract

drawings. If no footing elevation is shown, the minimum wall embedment shall be four feet as measured to the top of the leveling pad.

For all proprietary walls which incorporate a cast-in-place reinforced concrete footing, the bottom of the footing shall be located at or below the bottom of the footing elevation shown on the contract drawings. If no footing elevation is shown, the minimum wall embedment shall be four feet as measured to the bottom of the footing.

If steps at the bottom of the wall are required, they shall be kept at or below the footing elevation shown on the contract drawings. Steps in addition to those shown on the contract drawings will be permitted at no additional cost to the Department.

c. The wall shall be designed to be within all property lines and easement lines shown on the contract drawings. If additional work areas are necessary for the construction of the proprietary retaining wall, the Contractor shall be responsible for obtaining the rights from the affected property owners. Copies of these rights shall be forwarded to the Department.

d. The top of the wall shall be at the top of the wall elevations shown on the contract drawings. Where coping or barrier is utilized, the wall face panel shall extend up into the coping or barrier a minimum of two inches. The top of the face panels may be level or sloped to meet the top of the wall line noted.

e. Cast-in-place concrete will not be an acceptable replacement for areas noted by the wall envelope, except for minor grouting of pipe penetrations and leveling required for coping or traffic barrier.

f. The wall section above the influence line of railroad live load shall be designed for a minimum surcharge equal to three feet of soil at a unit weight of 125 pounds per cubic foot. The minimum equivalent fluid pressure used to design the wall section above the railroad live load influence line shall be 33 pounds per cubic foot per linear foot of wall. The wall sections within the influence line of railroad live load shall be designed for the live load affect from a Cooper E-80 load in accordance with the AREMA specifications. The railroad live load influence line is defined as a line originating at the bottom edge of the track tie and extending downward at a slope of 1 vertical on 1.5 horizontal. Track locations relative to the retaining walls are as shown on the plans.

g. If stated on the contract drawings, the wall shall be designed for seismic forces according to the AASHTO Specifications.

h. If the wall is detailed with a concrete parapet, the top two courses of the modular units or the top course of the mechanically stabilized earth units shall be designed to support a transverse railing load of 10 kips. The 10 kip load may be distributed over the length of the parapet section between joints, but not exceeding 20 feet. Computations that verify the stability of the top two courses of the modular units or the first course of the mechanically stabilized earth units and soil reinforcements shall be submitted to the Engineer.

i. The wall shall be designed to accommodate all roadway drainage and drainage structures as shown on the contract drawings.

j. The maximum allowable bearing pressure of the soil shall be as shown on the contract drawings. The bearing pressure stated assumes a uniform pressure distribution. If additional soils information is required by the Contractor's designer, it must be obtained by the Contractor and will not be reimbursed by the Department.

k. Temporary sheeting or Trench Boxes shall be required for all excavations where the side of the excavation is intercepted by the Railroad live load influence line. The live load influence line is defined as a line originating at the bottom edge of the track tie and extending downward at a slope of 1 vertical on 1.5 horizontal. Such excavations shall be designed to withstand the lateral force from a Cooper E-80 railroad live load on the nearest track.

6 - Design Requirements for Mechanically Stabilized Earth Walls: The design shall consider the internal stability of the wall mass as outlined below. The global stability of the structure, including slope stability, bearing capacity safety, and total and differential settlement is the responsibility of the Department.

a. Hydrostatic Forces: Unless specified otherwise, when a design high water surface is shown on the contract drawings at the face of the wall, the design stresses calculated from that elevation to the bottom of wall must include a three foot minimum differential head of saturated backfill. In addition, the buoyant weight of saturated soil shall be used in the calculation of pullout resistance.

b. Backfill: The friction angle of the pervious structure backfill used in the reinforced fill zone for the internal stability design of the wall shall be assumed to be 34 degrees unless shown otherwise on the contract drawings. The friction angle of the in-situ soils shall be assumed to be a maximum of 30 degrees unless otherwise shown on the Contract drawings.

c. Soil Reinforcement: The soil reinforcement shall be the same length from the bottom to the top of each wall section. The reinforcement length defining the width of the entire reinforced soil mass may vary with wall height along the length of wall. The minimum length of the soil reinforcement shall be seventy percent of the wall height, H, or eight feet, whichever is greater.

The soil reinforcement length shall be sufficient to satisfy the sliding, overturning and pullout factors of safety designated in AREMA and AASHTO Specifications and the minimum lengths required for external stability as recommended by the Department. Calculation of stresses and pullout factors of safety shall be in accordance with the AREMA or AASHTO Specifications for Highway Bridges as applicable. The AREMA requirement of a factor of safety of 1.75 for pullout of reinforcement strips is required for walls within the railroad right of way.

Calculations for stresses and factors of safety shall be based on assumed conditions at the end of the design life. The design life shall be 75 years unless otherwise indicated on the contract drawings. The design of soil reinforcements shall account for section loss as outlined in the AASHTO Specifications. All soil reinforcement shall be hot dipped galvanized.

7 - Design Requirements for Prefabricated Modular Walls: The general design of the wall shall be according to the AREMA or AASHTO Specifications as applicable. The design shall consider the stability at each level of modules. The global stability of the structure, including slope stability, bearing capacity safety, and total and differential settlement is the responsibility of the Department.

a. Hydrostatic Forces: Unless specified otherwise, when a design high water surface is shown on the contract drawings at the face of the wall, the design stresses calculated from that elevation to the bottom of wall must include a three foot minimum differential head of saturated backfill. In addition, the buoyant weight of saturated soil shall be used in the calculation of pullout resistance.

b. Backfill: The friction angle of the pervious structure backfill shall be assumed to be 34 degrees if sufficient amounts of pervious backfill are used. The friction angle of the in-situ soils shall be assumed to be a maximum of 30 degrees unless otherwise shown on the Contract drawings.

c. Infill: The maximum assumed unit weight of infill material used for determining the factor of safety for overturning shall be 100 pounds per cubic foot. If Doublewal modules are to be filled with crushed stone, the maximum assumed unit weight of the infill shall be 80 pounds per cubic foot.

d. Safety Factors: The minimum factors of safety shall be as specified in the AREMA or AASHTO Specifications as applicable amended as follows. The factor of safety for T-Wall shall be 1.5 for pullout of the concrete stem. Shear keys are not to be included in these computations. Only resisting forces developed beyond the theoretical failure plane may be used in these computations.

5.06.02 - Materials:

1 - Cast-in Place Concrete Walls: The materials furnished and used in the work shall be those prescribed within the Standard Specifications for Roads, Bridges and Incidental Construction, including supplemental specifications and applicable special provisions.

2 - Prefabricated Modular and Mechanically Stabilized Earth Walls: Materials shall conform to the following requirements and those not listed below shall be as prescribed within the Standard Specifications for Roads, Bridges and Incidental Construction, including supplemental specifications and applicable special provisions.

a. Design and Pattern of Form Lined Surfaces: The design and pattern of form lined concrete surfaces shall follow the layout shown on the contract plans and as described herein, and the manufacturer's standard drawings.

Form liner shall consist of large rectangular stones of varying length as shown on the drawings. Pattern is random length running bond with a coursing dimension compatible with the standard wall units of the proprietary wall manufacturer. The pattern shall be a weathered limestone pattern, such as pattern #11261 as manufactured by Concrete Rock Surfaces, LLC of Bethel, CT, or approved equal. Outside vertical edge of each stone mirrors the opposing vertical outside edge. Top half of outside vertical edge is mirror image of bottom half of vertical edge. Horizontal edges are both straight. Pattern is designed to permit 180 degree rotation and interconnection with itself or another pattern liner of differing horizontal dimension. Maximum relief of pattern is approximately 4 5/8", and approximate average relief is 2 3/4". The stone pattern shall vary in a random manner within the coursing parameters to prevent noticeable multiple duplicate pattern repetition and avoid stacked joints.

The Contractor may propose alternate form liner patterns that are compatible with the wall manufacturer face panels and match the approximate size and pattern of the existing cut stone masonry walls at the west abutment of the Sound Beach Avenue railroad bridge, bridge no. 03948R. The form liner pattern proposed for use shall be used in the construction of the required mock up panel, and is subject to the approval of the Engineer.

b. Form Liner: Form liners shall be reusable, elastomeric form liners, made of high-strength urethane, and cuttable form liners, made of lower grade urethane, easily attachable to forms. The form liners shall leave crisp, sharp definition of the architectural surface. Recurring textural configurations exhibited by repeating, recognizable shadow patterns shall be prevented by proper casting of form liner patterns. The form liners shall not compress more than 1/4 inch when concrete is poured at a rate of ten vertical feet per hour. The form liners shall be removable without causing deterioration of surface or underlying concrete. No substitutions will be permitted. The form liner shall conform to the pattern shown on the plans or approved equal.

c. Release Agent: If a form release agent is used, it must be of a non-staining type. The release agent shall be compatible with the form liners, as recommended by the manufacturer. In addition, where color staining of the formed surfaces is required, the release agent must be compatible with the color staining agent, as recommended by the manufacturer.

d. Form Ties: Form ties shall be designed to separate at least one inch back from finished surface, leaving only a neat hole that can be plugged with patching

material. The Patching material shall match the color and texture of the concrete formed surface and be compatible with the color staining agent.

e. Concrete: The concrete shall conform to the requirements of Section M.03 and as follows:

Concrete for all precast components shall be air-entrained, composed of portland cement, fine and coarse aggregates, admixtures and water. The air-entraining feature may be obtained by the use of either air-entraining portland cement or an approved air-entraining admixture. The entrained-air content shall be not less than four percent or more than seven percent. The concrete utilized shall be a mix which will attain a minimum 28-day strength (f'_c) of 4,500 psi. The mix design shall be furnished to the Engineer if requested.

Concrete for footings or leveling pads shall conform to the requirements of Class "A" Concrete. Class "F" Concrete shall be used for cast-in-place concrete copings.

Concrete Finish: Exposed faces within the limits shown on the plans for receiving a simulated stone masonry architectural treatment shall have a molded concrete surface as outlined above. All non-exposed surfaces shall have an unformed finish which shall be free of open pockets of aggregate and surface distortions in excess of 1/4 inch.

Acceptance Criteria for Precast Components: Precast components shall be accepted for use in wall construction provided the concrete strength meets or exceeds the minimum compressive strength requirement, the simulated stone masonry architecturally treated concrete surfaces match the approved form liner panel, the soil reinforcement connection devices and the panel or module dimensions are within the manufacturer's allowable tolerances and any chipping, cracks, honeycomb or other defects are within acceptable standards for precast concrete or repaired as determined by the Engineer.

It is recognized that certain cracks and surface defects are not detrimental to the structural integrity of the precast components if properly repaired. The Engineer shall determine the need for and proper method of such repair. All repairs shall be approved by the Engineer prior to acceptance of the precast component for use in wall construction.

Marking: The date of manufacture, the production lot number, and the piece-mark shall be clearly marked on the side of each panel or module. The piece marks shall match piece marks shown on the design and shop drawings for placement in the field.

f. Reinforcing Steel: Reinforcing steel shall conform to the requirements of ASTM A615, Grade 60.

g. Attachment Devices for Prefabricated Modular Walls: All structural connectors shall be hot dipped galvanized according to the requirements of ASTM A123 (AASHTO M-111).

The minimum thickness of the galvanizing shall be based on the service life requirements in the AREMA or AASHTO Specifications as applicable.

h. Soil Reinforcing and Attachment Devices for MSE Walls:

Soil Reinforcement: All soil reinforcement and structural connectors shall be hot dipped galvanized according to the requirements of ASTM A123 (AASHTO M-111). The minimum thickness of the galvanizing shall be based on the service life requirements as previously stated.

Steel strip reinforcement shall be hot rolled to the required shape and dimensions. The steel shall conform to AASHTO M223 (ASTM A572) Grade 65 unless otherwise specified.

Welded wire fabric reinforcement shall be shop fabricated from cold-drawn wire of the sizes and spacings shown on the plans. The wire shall conform to the requirements of ASTM A82, fabricated fabric shall conform to the requirements of ASTM A185.

Connection Hardware: Connection hardware shall conform to the details on the plans and the requirements in the special provisions or the plans. All fasteners shall be galvanized according to the requirements of ASTM A-153 (AASHTO M-232). The minimum thickness of the galvanizing shall be based on the service life requirements as previously stated.

i. Joint Materials: All horizontal and vertical joints between panels shall be covered by a geotextile (separation-high survivability) conforming to the requirements of Article M.08.02-26. The minimum width and lap shall be twelve inches. Details of installation including connection of the geotextile to coping shall be provided.

j. Backfill: Backfill shall be pervious structure backfill conforming to the requirements of Articles M.02.05 and M.02.06.

In addition, the backfill for Mechanically Stabilized Earth Walls shall conform to all of the following requirements:

Electrochemical Requirements: The backfill material shall conform to the following electrochemical requirements:

PROPERTY	REQUIREMENT	TEST METHODS
Resistivity at 100% saturation	Minimum 3000 ohm-cm	ASTM G-57-78 AASHTO T-288-91I
pH	Acceptable Range 5-10	ASTM G-51-77 AASHTO T-289-91I
Chlorides	Maximum 100 ppm	ASTM D-512-88 AASHTO T-291-91I
Sulfates	Maximum 200 ppm	ASTM D-516-88 AASHTO T-290-91I

5.06.03 - Construction Methods:

1 - Cast-in-Place Concrete: All construction methods for cast-in-place concrete shall be in accordance with the detailed requirements prescribed for the construction the appropriate items as specified in the Standard Specifications for Roads, Bridges, and Incidental Construction.

2 - Prefabricated Modular Walls: All construction methods for items not listed below shall be in accordance with the detailed requirements prescribed for the construction of the appropriate items as specified in the Standard Specifications for Roads, Bridges, and Incidental Construction.

a. Special Surface Treatment: Before proceeding with production, a model modular unit shall be provided by the fabricator for the Engineer's approval to establish a guide and standard for the type of finish to be furnished on the exposed face. This model shall be kept at the fabricator's plant to be used for comparison purposes during production. Formed surfaces other than the exposed face shall not require a special finish.

b. Inspection and Rejection: The quality of materials, the process of manufacture, and the finished units shall be subject to inspection by the Engineer prior to shipment.

Modular units which have imperfect molding, honeycomb, open texture concrete, or broken corners shall be repaired to the satisfaction of the Engineer or shall be rejected. Insufficient compressive strength shall also be cause for rejection.

Modular units with special surface treatments shall be rejected if there are variations in the exposed face that deviate from the approved model as to color or texture in accordance with precast concrete industry standards.

c. Marking: The date of manufacture shall be clearly scribed on an inside surface of each modular unit.

d. On Site Representative: A qualified and experienced representative from the wall supplier shall be at the site at the initiation of the wall construction to assist the Contractor and the Engineer. If there is no more than one wall on a project then this criteria will apply to construction of the initial wall only. The representative shall also be available on as needed basis, as requested by the Engineer.

e. Installation: The modular units shall be installed in accordance with manufacturer's recommendations. Special care shall be taken in setting the bottom course of units to true line and grade.

The vertical joint opening on the front face of the wall shall not exceed 3/4 inch. Vertical tolerances and horizontal alignment tolerances measured from the face line shown on the contract drawings shall not exceed 3/4 inch when measured along an eight straightedge. The overall tolerance of the wall from top to bottom shall not exceed 1/2 inch per eight feet of wall height or one inch total, whichever is the lesser, measured from the face line shown on the contract drawings. A strip of geotextile shall be installed at all vertical joints.

Assembly of the various components shall be performed in such a manner that no undue strain or stress is placed on any of the members that constitute the completed structure.

f. Backfilling:

Doublewal:

Infill for modular units shall be placed, one course at a time, in lifts not exceeding two feet in thickness. The dry density of each lift of pervious structure backfill placed inside the modular units, after compaction, shall not be less than 90 percent of the dry density for that material when tested in accordance with AASHTO T-180, Method D. Each lift shall be thoroughly compacted with a vibratory tamping device.

Placement of the pervious structure backfill behind the wall shall closely follow erection of successive courses of modular units. At no time shall the difference in backfill elevation between the interior and exterior of the wall exceed six feet.

The units may be backfilled with crushed stone, provided that the design of the wall was based on a density of 80 pounds per cubic foot.

All pervious structure backfill placed outside of the modular units shall be placed in accordance with the requirements of Article 2.16.03.

T-Wall:

Backfill placement shall closely follow erection of each course of modules. Backfill shall be placed in such a manner as to avoid any damage or disturbance to the wall materials or misalignment of the modules. Any wall materials which become damaged or disturbed during

backfill placement shall be either removed and replaced at the Contractor's expense or corrected, as directed by the Engineer. Any backfill material placed within the wall envelope which does not meet the requirements of this specification shall be corrected or removed and replaced at the Contractor's expense.

Backfill shall be compacted to 95 percent of the maximum density as determined by AASHTO T-99, Method C or D (with oversize correction, as outlined in Note 7).

The moisture content of the backfill material prior to and during compaction shall be uniform throughout each layer. Backfill material shall have a placement moisture content less than or equal to the optimum moisture content. Backfill material with a placement moisture content in excess of the optimum moisture content shall be removed and reworked until the moisture content is uniform and acceptable throughout the entire lift. The optimum moisture content shall be determined in accordance with AASHTO T-99, Method C or D (with oversize correction, as outlined in Note 7).

If 30 percent or more of the backfill material is greater than 3/4 inch in size, AASHTO T-99 is not applicable. For such a material, the acceptance criterion for control of compaction shall be either a minimum of 70 percent of the relative density of the material as determined by a method specification provided by the wall supplier, based on a test compaction section, which defines the type of equipment, lift thickness, number of passes of the specified equipment, and placement moisture content.

The maximum lift thickness after compaction shall not exceed ten inches. The Contractor shall decrease this lift thickness, if necessary, to obtain the specified density.

Compaction within three feet of the face of the modules shall be achieved by at least three passes of a lightweight mechanical tamper, roller or vibratory system. The specified lift thickness shall be adjusted as warranted by the type of compaction equipment actually used. Care shall be exercised in the compaction process to avoid misalignment or damage to the module. Heavy compaction equipment shall not be used to compact backfill within three feet of the wall face.

At the end of each day's operation, the Contractor shall slope the last level of backfill away from the wall facing to direct runoff of rainwater away from the wall face. The Contractor shall control and divert runoff at the ends of the wall such that erosion or washout of the wall section does not occur. In addition, the Contractor shall not allow surface runoff from adjacent areas to enter the wall construction site.

3 - Mechanically Stabilized Earth Walls: All construction methods for items not listed below shall be in accordance with the detailed requirements prescribed for the construction of the appropriate items as specified in the Standard Specifications for Roads, Bridges, and Incidental Construction.

a. Special Surface Treatment: Before proceeding with production, a model face panel shall be provided by the fabricator for the Engineer's approval to establish a guide and standard for the type of finish to be furnished on the exposed face. This model shall be kept at the fabricator's plant to be used for comparison purposes during production. Formed surfaces other than the exposed face shall not require a special finish.

b. Inspection and Rejection: The quality of materials, the process of manufacture, and the finished units shall be subject to inspection by the Engineer prior to shipment.

Face panels which have imperfect molding, honeycomb, open texture concrete, or broken corners shall be repaired to the satisfaction of the Engineer or shall be rejected. Insufficient compressive strength shall also be cause for rejection.

Face panels with special surface treatments shall be rejected if there are variations in the exposed face that deviate from the approved model as to color or texture in accordance with precast concrete industry standards.

c. Marking: The date of manufacture and piece mark shall be clearly scribed on an inside surface of each face panel.

d. Foundation Preparation: The foundation for the structure shall be graded level for a width equal to or exceeding the length of the soil reinforcements, or as shown on the plans. Prior to wall construction, the foundation, if not in rock, shall be compacted. Any foundation soils found to be unsuitable shall be removed and replaced with granular fill.

At each panel foundation level, an un-reinforced concrete leveling pad shall be provided as shown on the plans. The leveling pad shall be cast to the design elevations as shown on the plans.

e. On Site Representative: A qualified and experienced representative from the wall supplier shall be at the site at the initiation of the wall construction to assist the Contractor and the Engineer. If there is no more than one wall on a project then this criteria will apply to construction of the initial wall only. The representative shall also be available on as needed basis, as requested by the Engineer.

f. Wall Erection: Panels shall be placed in successive horizontal lifts in the sequence shown on the plans as backfill placement proceeds. As backfill material is placed behind the panels, the panels shall be maintained in a vertical position. Vertical tolerances (plumbness) and horizontal alignment tolerances shall not exceed 3/4 inch in eight feet. The allowable offset in any panel joint shall be 3/4 inch. The overall vertical tolerance of the wall (plumbness from top to bottom) shall not exceed 1/2 inch per eight feet, or one inch total, which ever is the lesser, measured from the face line shown on the plans.

g. Placement of Reinforcements: Bending of reinforcements in the horizontal plane that results in a permanent deformation in their alignment shall not be allowed. Gradual bending in the vertical direction that does not result in permanent deformations is allowable.

Soil reinforcements shall be placed normal to the face of the wall, unless otherwise shown on the plans.

h. Backfill Placement: Backfill placement shall closely follow erection of each course of panels. Backfill shall be placed in such a manner as to avoid any damage or disturbance to the wall materials or misalignment of the facing panels. Any wall materials which become damaged or disturbed during backfill placement shall be either removed and replaced at the Contractor's expense or corrected, as directed by the Engineer. Any backfill material placed within the reinforced soil mass which does not meet the requirements of this specification shall be corrected or removed and replaced at the Contractor's expense.

Backfill shall be compacted to 95 percent of the maximum density as determined by AASHTO T-99, Method C or D (with oversize correction, as outlined in Note 7).

The moisture content of the backfill material prior to and during compaction shall be uniform throughout each layer. Backfill material shall have a placement moisture content less than or equal to the optimum moisture content. Backfill material with a placement moisture content in excess of the optimum moisture content shall be removed and reworked until the moisture content is uniform and acceptable throughout the entire lift. The optimum moisture content shall be determined in accordance with AASHTO T-99, Method C or D (with oversize correction, as outlined in Note 7).

If 30 percent or more of the backfill material is greater than 3/4 inch in size, AASHTO T-99 is not applicable. For such a material, the acceptance criterion for control of compaction shall be either a minimum of 70 percent of the relative density of the material as determined by a method specification provided by the wall supplier, based on a test compaction section, which defines the type of equipment, lift thickness, number of passes of the specified equipment, and placement moisture content.

The maximum lift thickness after compaction shall not exceed ten inches, regardless of the vertical spacing between layers of soil reinforcements. The Contractor shall decrease this lift thickness, if necessary, to obtain the specified density. Prior to placement of the soil reinforcements, the backfill elevation at the face shall be level with the connection after compaction. From a point approximately three feet behind the back face of the panels to the free end of the soil reinforcements the backfill shall be two inches above the attachment device elevation unless otherwise shown on the plans.

Compaction within three feet of the back face of the panels shall be achieved by at least three passes of a lightweight mechanical tamper, roller or vibratory system. The specified lift thickness shall be adjusted as warranted by the type of compaction equipment actually used. Care shall be exercised in the compaction process to avoid misalignment of the panels or damage

to the attachment devices. Heavy compaction equipment shall not be used to compact backfill within three feet of the wall face.

At the end of each day's operation, the Contractor shall slope the last level of backfill away from the wall facing to direct runoff of rainwater away from the wall face. The Contractor shall control and divert runoff at the ends of the wall such that erosion or washout of the wall section does not occur. In addition, the Contractor shall not allow surface runoff from adjacent areas to enter the wall construction site.

4 – Architectural Form Liners and Chemically Stained Treatment

a) Quality Of Work: The process of form lining, texturing and color staining shall be performed in strict accordance with the manufacturer's written recommendations and as approved by the Engineer.

b) Quality Assurance:

1) Manufacturer of the Architectural Form Liners shall have at least five years experience making custom simulated stone molds.

2) Contractor/Subcontractor (installer) shall have at least five years experience pouring vertically formed architectural concrete. The installer shall be trained in the manufacturer's special techniques in order to achieve realistic surfaces.

3) A Pre-installation Meeting shall be scheduled with the manufacturer's representative, installer, designer, and Department inspection personnel to assure understanding of simulated stone masonry use, requirements for construction of mockup, and to coordinate the work.

c) Submittals:

1) Catalog cuts, manufacturer's literature, and technical data for the materials specified herein, including but not limited to simulated stone mold pattern, form liner, release agent, concrete patching material, and color stain.

2) Photographs: Color photographs of three (3) similar past projects of the manufacturer. Include project names, locations and a telephone number of the previous projects Owner’s representatives.

3) Samples: Form ties, sample and description, showing method of separation when forms are removed.

4) Plan, elevation and details to show overall pattern, joint locations, form tie locations, and end, edge and other special conditions.

d) Form Lined Concrete Mockup: A mockup of one precast unit using the form liner and treated with the chemical stain, shall be constructed and delivered to the site at least four weeks prior to the commencement of the fabrication production work for the wall units. The mockup shall be fabricated using the same materials, methods and work force that will be used for the project. Location on site for delivery and review of the mockup shall be as approved by Engineer.

The mockup shall satisfy the following requirements:

1) The size shall at a minimum equal to the standard face panel for the type of proprietary wall proposed for the site or larger if needed to adequately illustrate the pattern, texture, and color selected.

2) After concrete work on mockup is completed and cured, and after surface is determined by the Engineer to be acceptable for forming and pouring, the contractor shall proceed with mockup as quality standard.

3) The contractor shall remove mockup as directed by the Engineer.

e) Protection: The contractor is solely responsible for construction methods, means, techniques, and for construction site safety precautions. The contractor shall conduct all construction operations in conformance with all applicable local, state and federal safety laws, rules, regulations and codes. All Material Safety Data Sheets (MSDS) shall be available for inspection.

f) Liner to Form Attachment System: The form liners shall be securely attached to forms with wood or sheet metal screws; threaded inserts added to the back of the form liner for bolts to fasten the form liner through the forms, or; bolted through the face of the form liner with flat head bolts inserted in a pattern joint and through the form liner and forming system. Construction adhesives may be used, but not on reusable forms. Place adjacent form liners with less than 1/4 inch separation between form liners.

g) Release of Form Liners From Hardened Concrete: Only manufacturer recommended form release agents shall be utilized and shall be applied to the form liners before the concrete is poured. Release agents shall be applied in strict accordance with release agent manufacturer recommendations. Hand-charged sprayers will only be allowed if a thin uniform coating of release agent is obtained on the form liner. **The release agent must be compatible with the color staining agent, as recommended by the manufacturer.**

h) Removal of Form Liners: The form liner shall be removed from the wall within 24 hours of pouring the concrete. The form liners may be detached from the forms and then removed from the concrete, or they may remain attached to the forms and the entire forming system removed from the concrete. Remove the form liners from the

top, down. Curing of concrete may be accomplished with form liners and forms placed back against the wall after the initial detachment. Curing shall be performed in accordance with Article 6.01.03-19. Curing compounds shall not be used.

i) Care and Cleaning of Form Liner: Form liners shall be cleaned the same day they are removed from the wall with a power wash and mild detergent. Synthetic brushes with stiff bristles may be used on stubborn areas. Mild acid washes may also be used. Solvents shall not be used. Cuts and tears in form liners shall be sealed and repaired before each use of the liners. If necessary, patching of holes shall be performed with 100% clear silicone caulk. Joints between form liners shall be cleaned before each use to remove any mortar in the joints. Form liners shall be stored inside or under a protective, non-transparent cover, in a vertical, upside-down position.

j) Wall Patching and Preparation: After form liners are removed from the hardened concrete, the textured surface shall be prepared. All holes larger then 3/4 inch in greatest principal dimension shall be filled with concrete patching material. All honeycombed areas shall be filled and textured to match surrounding areas. Seam lines and other unnatural protrusions shall be ground down to match adjacent areas with a hand-held power grinder using discs made for concrete. Grinding of seams shall be performed immediately after removal of the form liners. Perform final bush hammering to blend defects and ground areas into the final rock texture. In particular, the process of wall patching and preparation shall be subject to approval of the manufacturer and Engineer.

k) Simulated Stone Mold Preparation: The contractor shall clean and make free of buildup the form liners prior to each pour. He shall inspect for blemishes and tears and repair them if needed following manufacturer's recommendations.

l) Chemically Stained Concrete: Color stain shall be a penetrating pigmented stain mix of a color closely matching the existing masonry at the site. The stain shall be a low viscosity, semi-opaque acrylic emulsion designed specifically for cementitious surfaces. Tinting pigments shall be inorganic oxides. Stain shall create a surface finish that is breathable (allows water vapor transmission) and that resists deterioration from water, acid, alkali, fungi and sunlight. Stain mix shall be a water borne, low V.O.C. material, less than 289 grams/liter, and shall meet requirements for weathering resistance of 2000 hours accelerated exposure in accordance with ASTM G23. Stain shall be applied in accordance with manufacturer’s recommendations and completed surfaces shall be free of blemishes, discoloration, surface voids and unnatural form marks. Two coats shall be applied if necessary to achieve a uniform color without streaks or thin spots.

5.06.04 - Method of Measurement: This work will be paid for on a lump sum basis and will not be measured for payment.

5.06.05 - Basis of Payment: This work will be paid for at the contract lump sum for "RETAINING WALL", complete in place at Site No. 1, which price shall include all work shown within the pay limits shown on the contract drawings for the retaining wall including but not limited to the following:

1. Design and construction of the proprietary retaining wall.

2. Excavation required for the construction of the retaining wall.

3. Design and construction of temporary sheeting to retain the existing facilities during construction.

4. The furnishing, placing and compacting of pervious structure backfill within the payment lines.

5. The furnishing and placing of backfill drainage systems for the wall.

6. The furnishing and placing of rigid metal conduit, junction boxes, light standard anchorages, and other electrical appurtenances located within the wall proper.

7. Services of the On-Site Representative.

8. Any other work and materials shown on the plans for the retaining wall.

The price shall also include all materials, equipment, tools and labor incidental thereto.

The price shall also include any cost associated with the chemical stain treatment and developing and producing stone masonry form liners to meet the requirements above.

If bedrock or boulders in excess of one cubic yard are encountered in the excavation, it shall be paid for under the item "Structure Excavation - Rock".

Pay Item	Pay Unit
Retaining Wall	L.S.

ITEM #0507188A -HYDRODYNAMIC SEPARATOR (SITE NO. 1)

Description: Hydrodynamic separators are proprietary devices manufactured for stormwater treatment. The hydrodynamic separator shall be a precast concrete structure and include an internal chamber with features that induce a swirling, circular, or spiraling flow pattern in the stormwater flow that separate and trap sediment and pollutants in a chamber that can be accessed for later removal.

This item will consist of furnishing and construction of a hydrodynamic separator, a flow diversion structure, manholes and pipes in the location, grades, treatment capacity and to the dimensions and details shown on the contract drawings, and in accordance with these specifications or as directed by the Engineer. The work also includes the preparation of hydraulic design calculations for the hydrodynamic separator(s) and flow diversion structure(s) as specified herein.

The hydrodynamic separator shall be assembled and installed in strict compliance with the Manufacturer's instructions unless otherwise directed by these specifications or by the Engineer. Internal flow controls / diversion components, external appurtenances, concrete manhole riser sections, manhole frames and covers, reinforcing, threaded inserts, lifting and seating fixtures, non-shrink grout, and all other necessary materials and equipment to complete the work shall be included.

This item shall also include the cleaning of the hydrodynamic separator of all sediment and debris every 90 days, or as needed, from when they are put into service, until final acceptance of the project.

Approved Products and Manufacturer Information: Proprietary hydrodynamic separators currently approved by the Department are listed in Table 1 "**CONNDOT LIST OF APPROVED HYDRODYNAMIC SEPARATORS**". Company contact information is provided for convenience. *As the company information frequently changes, the Department is not responsible for its accuracy.*

The Engineer will reject any proposed hydrodynamic separator that is not listed in Table 1.

The listed products have been approved for use on Department projects based on only a general review of the product's construction, function and treatment capabilities. **Therefore, the approved list shall not be construed to mean that all products appearing on the list are suitable to any specific project site or drainage design.**

Performance: The stormwater treatment performance of the selected hydrodynamic separator shall be based on the water quality flow (WQF) as defined and calculated in accordance with the Department's current version of the Drainage Manual.

The hydrodynamic separator shall be designed to treat the entire WQF as indicated on the contract drawings or specifications, without bypass, either through the separator's internal components or at the flow diversion structure.

TABLE 1 – CONNDOT LIST OF APPROVED HYDRODYNAMIC SEPARATORS

HYDRODYNAMIC SEPARATOR PRODUCT NAME	COMPANY INFORMATION
Downstream Defender	Hydro International 94 Hutchins Drive Portland, Maine 04102 (207) 756-6200 http://www.hydrointernational.biz/us/index_us.php
FloGard Dual-Vortex Hydrodynamic Separator	KriStar Enterprises, Inc. 4020 Riverclub Drive Cumming, Georgia 30041 (770)-889-4338 http://www.kristar.com/
High Efficiency CDS	Contech Stormwater Solutions 200 Enterprise Drive Scarborough, Maine 04074 (800)-925-5240 http://www.contech-cpi.com/stormwater/13
Vortechs	
Vortsentry	
Hydroguard	Hydroworks, LLC 525Boulevard Kenilworth, NJ 07033 (888)-290-7900 / (908)-272-4411 http://www.hydroworks.org/
Stormceptor OSR	Rinker Materials – Stormceptor 69 Neck Road Westfield, MA 01085 (800)-909-7763 / (413) 246-7144 www.rinkerstormceptor.com
Stormceptor STC	
V2B1	Environment 21 8713 Read Road, P.O. Box 55 East Pembroke, New York 14056-0055 (800)-809-2801 / (585)-815-4700 www.env21.com

Hydrodynamic separator systems and models that have been pre-approved for use on Department projects and their corresponding maximum allowable WQF's for stormwater treatment are shown in **Table 2**, "**PERFORMANCE MATRIX FOR CONNDOT APPROVED HYDRODYNAMIC SEPARATORS**". The Engineer will reject any proposed hydrodynamic separator system/model that is not listed in Table 2.

For more severe storm events that produce flows up to and including the drainage design flow (DDF) and which result in flows greater than the WQF being directed to the hydrodynamic separator from the flow diversion structure, the hydrodynamic separator shall be capable of conveying the portion of the DDF directed to it without surcharging the upstream storm drainage system and re-suspending previously trapped sediment.

The WQF to be treated and the portion of the DDF directed to the hydrodynamic separator when the drainage system is operating at its design flow are shown on the Hydrodynamic Separator

Design Data Sheets (Form A - Design). A separate form for each hydrodynamic separator site on the project is attached to this specification.

Sediment Storage Capacity: Settleable solids shall accumulate in a location within the hydrodynamic separator structure that is accessible for cleaning and maintenance but not susceptible to resuspension. Direct access through openings in the precast concrete unit shall be provided to the sediment storage chamber and all other chambers to facilitate maintenance.

The standard sediment storage capacities for Department pre-approved hydrodynamic separator systems/models are shown in **Table 3**, "**STANDARD SEDIMENT STORAGE CAPACITY FOR CONNDOT APPROVED HYDRODYNAMIC SEPARATORS**". The sediment storage capacities listed in Table 3 are values based on standard structure dimensions and anticipated maintenance requirements.

Some standard hydrodynamic separator models may be modified as determined by the Manufacturer to increase the sediment storage capacity. When a modification is proposed by increasing the depth of the standard structure, the sediment storage capacity of the proposed structure shall be determined in accordance with **Table 4, "SEDIMENT STORAGE CAPACITY CALCULATION"**.

The Contractor shall be responsible for verifying the standard sediment storage capacity of the hydrodynamic separator unit(s) and coordinating any proposed modifications to increase sediment storage capacity with the Manufacturer(s). All proposed modifications and revised sediment storage capacity determinations shall be clearly documented in the working drawing submission to the Department.

The minimum sediment storage capacities required for each hydrodynamic separator site on the project are shown on the Hydrodynamic Separator Design Data Sheets (Form A – Design) attached to this specification.

Hydraulic Design: The Contractor shall prepare or have prepared a hydraulic grade line (HGL) analysis for an evaluation of the selected hydrodynamic separator and the design of the flow diversion structure as described in this section. The HGL analysis shall be performed for both the WQF and the DDF. The analysis shall be consistent with the methodology described in Section 11.12 of the Department's Drainage Manual.

Head loss coefficients, to be used in the HGL analysis, shall be determined in accordance with Section 11.12.6 for all structures except the hydrodynamic separator, which shall be obtained from the Manufacturer. Documentation shall be submitted demonstrating how the coefficient was derived either through calculation and/or testing data. A benching factor of 1.0 shall be applied to the flow diversion structure.

The HGL analysis (or portion of) that was performed for the design of the storm drainage systems and preparation of the construction plans, including the design of the flow diversion structure and evaluation of a "generic" hydrodynamic separator, is shown on the Hydrodynamic Separator Design Data Forms (Form A – Design) attached to this specification.

TABLE 2 - PERFORMANCE MATRIX FOR CONNDOT APPROVED HYDRODYNAMIC SEPARATORS

Maximum WQF (cfs)	**Product Model**								
	Downstream Defender	*Flogard*	*High Eff. CDS*	*Hydroguard*	*Stormceptor OSR*	*Stormceptor STC*	*Vortechs*	*Vortsentry*	*V2B1*
0.4	4-ft	DVS-36	2015-4G; 2015-4	HG 4	065	450	1000	VS30	2
0.5	4-ft	DVS-36	2015-4G; 2015-4	HG 4	065	900	1000	VS30	2
0.6	4-ft	DVS-36	2015-4G; 2015-4	HG 4	065	900	1000	VS40	2
0.7	4-ft	DVS-48	2015-4G; 2015-4	HG 4	140	900	1000	VS40	2
0.8	4-ft	DVS-48	2015-4G; 2015-4	HG 4	140	900	1000	VS40	2
0.9	4-ft	DVS-48	2015-4G; 2015-4	HG 4	140	1200	1000	VS40	3
1.0	4-ft	DVS-48	2015-4G; 2015-4	HG 4	140	1800	1000	VS40	3
1.1	4-ft	DVS-48	2015-4G; 2015-4	HG 4	140	1800	1000	VS40	4
1.2	6-ft	DVS-48	2015	HG 5	140	2400	1000	VS50	4
1.3	6-ft	DVS-60	2015	HG 5	140	2400	1000	VS50	4
1.4	6-ft	DVS-60	2015	HG 5	140	2400	2000	VS50	4
1.5	6-ft	DVS-60	2020	HG 5	140	2400	2000	VS50	6
1.6	6-ft	DVS-60	2020	HG 5	140	2400	2000	VS50	6
1.7	6-ft	DVS-60	2020	HG 5	250	2400	2000	VS50	6
1.8	6-ft	DVS-60	2020	HG 6	250	2400	2000	VS50	7
1.9	6-ft	DVS-60	2020	HG 6	250	3600	2000	VS60	7
2.0	6-ft	DVS-60	2020	HG 6	250	3600	2000	VS60	7
2.1	6-ft	DVS-60	2020	HG 6	250	3600	2000	VS60	9
2.2	6-ft	DVS-72	2025	HG 6	250	3600	2000	VS60	8
2.3	6-ft	DVS-72	3020, 3020-D	HG 6	250	3600	2000	VS60	8
2.4	6-ft	DVS-72	3035; 3035-D	HG 6	250	4800	2000	VS60	8
2.5	6-ft	DVS-72	3035; 3035-D	HG 6	250	4800	3000	VS60	10
2.6	6-ft	DVS-72	3035; 3035-D	HG 6	250	4800	3000	VS60	11
2.7	6-ft	DVS-72	3035; 3035-D	HG 7	250	4800	3000	VS60	11
2.8	6-ft	DVS-72	3035; 3035-D	HG 7	250	4800	3000	VS70	11
2.9	6-ft	DVS-72	3035; 3035-D	HG 7	250	4800	3000	VS70	12
3.0	6-ft	DVS-72	3035; 3035-D	HG 7	390	4800	3000	VS70	12

TABLE 2 - PERFORMANCE MATRIX FOR CONNDOT APPROVED HYDRODYNAMIC SEPARATORS (continued)

Maximum WQF (cfs)	Product Model								
	Downstream Defender	*Flogard*	*High Eff. CDS*	*Hydroguard*	*Stormceptor OSR*	*Stormceptor STC*	*Vortechs*	*Vortsentry*	*V2B1*
3.1	8-ft	DVS-72	3035; 3035-D	HG 7	390	4800	3000	VS70	12
3.2	8-ft	DVS-72	3035; 3035-D	HG 7	390	4800	3000	VS70	12
3.3	8-ft	DVS-72	3035; 3035-D	HG 7	390	4800	3000	VS70	14
3.4	8-ft	DVS-72	3035; 3035-D	HG 7	390	6000	3000	VS70	14
3.5	8-ft	DVS-72	3030; 3030-DV, 3030-D; 4030-D	HG 7	390	6000	3000	VS70	14
3.6	8-ft	DVS-72	4030	HG 7	390	6000	3000	VS70	14
3.7	8-ft	DVS-84	4030	HG 8	390	6000	3000	VS70	14
3.8	8-ft	DVS-84	4030	HG 8	390	6000	4000	VS70	13
3.9	8-ft	DVS-84	4030	HG 8	390	7200	4000	VS70	15
4.0	8-ft	DVS-84	4030	HG 8	390	7200	4000	VS80	15
4.1	8-ft	DVS-84	4030	HG 8	390	7200	4000	VS80	15
4.2	8-ft	DVS-84	4030	HG 8	390	7200	4000	VS80	16
4.3	8-ft	DVS-84	4030	HG 8	390	7200	4000	VS80	16
4.4	8-ft	DVS-84	4030	HG 8	390	7200	4000	VS80	16
4.5	8-ft	DVS-84	4030	HG 8	390	7200	4000	VS80	16
4.6	8-ft	DVS-84	5640-D	HG 8	390	7200	4000	VS80	17
4.7	8-ft	DVS-84	5640-D	HG 8	390	7200	4000	VS80	17
4.8	8-ft	DVS-84	5640-D	HG 8	390	7200	4000	VS80	17
4.9	8-ft	DVS-84	5640-D	HG 8	390	11000s	4000	VS80	17
5.0	8-ft	DVS-84	5640-D	HG 9	390	11000s	4000	VS80	19
5.2	8-ft	DVS-84	4040-D	HG 9	390	11000s	4000	VS80	20
5.4	8-ft	DVS-96	4040-D	HG 9	390	11000s	4000	VS100	20
5.5	8-ft	DVS-96	4045-D	HG 9	390	11000s	5000	VS100	18
5.6	8-ft	DVS-96	4045-D	HG 9	560	11000s	5000	VS100	18
6.0	8-ft	DVS-96	4040	HG 9	560	11000s	5000	VS100	18
6.1	8-ft	DVS-96	4040	HG 9	560	11000s	5000	VS100	21

TABLE 2 - PERFORMANCE MATRIX FOR CONNDOT APPROVED HYDRODYNAMIC SEPARATORS (continued)

Maximum WQF (cfs)	Product Model								
	Downstream Defender	*Flogard*	*High Eff. CDS*	*Hydroguard*	*Stormceptor OSR*	*Stormceptor STC*	*Vortechs*	*Vortsentry*	*V2B1*
6.3	8-ft	DVS-96	4040	HG 9	560	11000s	5000	VS100	25
6.4	10-ft	DVS-96	4040	HG 9	560	11000s	5000	VS100	25
6.5	10-ft	DVS-96	4040	HG 10	560	11000s	5000	VS100	25
6.9	10-ft	DVS-96	4040	HG 10	560	11000s	5000	VS100	25
7.0	10-ft	DVS-96	4040	HG 10	560	11000s	5000	VS100	22
7.1	10-ft	DVS-96	5042-D	HG 10	560	11000s	5000	VS100	22
7.2	10-ft	DVS-96	5042-D	HG 10	560	13000s	5000	VS100	22
7.3	10-ft	DVS-96	4045	HG 10	560	13000s	5000	VS100	22
7.5	10-ft	DVS-96	5653-D	HG 10	560	13000s	7000	VS100	22
7.7	10-ft	DVS-120	5653-D	HG 10	560	13000s	7000	VS100	22
7.8	10-ft	DVS-120	5653-D	HG 10	560	13000s	7000	VS100	50
7.9	10-ft	DVS-120	5653-D	HG 10	780	13000s	7000	VS100	50
8.0	10-ft	DVS-120	5658-D	HG 10	780	13000s	7000	VS100	50
8.2	10-ft	DVS-120	5658-D	HG 10	780	16000s	7000	VS100	50
8.5	10-ft	DVS-120	5658-D	HG 12	780	16000s	7000	VS100	50
8.6	10-ft	DVS-120	5658-D	HG 12	780	16000s	7000	VS100	50
8.9	10-ft	DVS-120	5678-D	HG 12	780	16000s	7000	VS100	50
9.0	10-ft	DVS-120	5678-D	HG 12	780	16000s	7000	VS120	50
9.2	10-ft	DVS-120	5678-D	HG 12	780	16000s	7000	VS120	50
9.5	10-ft	DVS-120	5050-DV	HG 12	780	16000s	7000	VS120	50
9.6	10-ft	DVS-120	5050-DV	HG 12	780	16000s	7000	VS120	50
10.0	10-ft	DVS-120	5050-DV	HG 12	780	16000s	9000	VS120	50
10.1	10-ft	DVS-120	5050-DV	HG 12	780	16000s	9000	VS120	50
10.5	10-ft	DVS-120	5050-DV	HG 12	780		9000	VS120	50
10.9	10-ft	DVS-120	5050-DV	HG 12	780		9000	VS120	50
11.0	10-ft	DVS-120	7070-DV	HG 12	780		9000	VS120	50
11.2	10-ft	DVS-120	7070-DV	HG 12	1125		9000	VS120	50

TABLE 2 - PERFORMANCE MATRIX FOR CONNDOT APPROVED HYDRODYNAMIC SEPARATORS (continued)

Maximum WQF (cfs)	Product Model								
	Downstream Defender	*Flogard*	*High Eff. CDS*	*Hydroguard*	*Stormceptor OSR*	*Stormceptor STC*	*Vortechs*	*Vortsentry*	*V2B1*
11.5		DVS-120	7070-DV	HG 12	1125		9000	VS120	50
11.8		DVS-120	7070-DV	HG 12	1125		9000	VS120	50
11.9		DVS-120	7070-DV	HG 12	1125		9000	VS120	60
12.0		DVS-120	7070-DV	HG 12	1125		9000	VS120	60
12.1		DVS-120	7070-DV	HG 12	1125		9000	VS120	60
12.5		DVS-120	7070-DV	HG 12	1125		11000	VS120	60
13.0		DVS-120	7070-DV		1125		11000	VS120	60
13.5		DVS-120	7070-DV		1125		11000	VS120	60
13.6		DVS-120	7070-DV		1125		11000	VS120	60
14.0		DVS-144	7070-DV		1125		11000	VS120	60
14.5		DVS-144	7070-DV		1125		11000		60
14.9		DVS-144	7070-DV		1125		11000		60
15.0		DVS-144	7070-DV		1125		16000		60
15.5		DVS-144	7070-DV		1125		16000		60
15.7		DVS-144	7070-DV		1125		16000		60
16.0		DVS-144	7070-DV				16000		60
16.5		DVS-144	7070-DV				16000		60
17.0		DVS-144	7070-DV				16000		
17.5		DVS-144	7070-DV				16000		
18.0		DVS-144	7070-DV				16000		
18.5		DVS-144	7070-DV				16000		
19.0		DVS-144	7070-DV				16000		
19.7		DVS-144	7070-DV				16000		
20.0		DVS-144	10060-DV				16000		
21.5		DVS-144	10060-DV				16000		
22.3		DVS-144	10060-DV				1319		
25.0			10060-DV				1319		
25.2			10060-DV				1319		

TABLE 2 - PERFORMANCE MATRIX FOR CONNDOT APPROVED HYDRODYNAMIC SEPARATORS (continued)

Maximum WQF (cfs)	**Product Model**								
	Downstream Defender	*Flogard*	*High Eff. CDS*	*Hydroguard*	*Stormceptor OSR*	*Stormceptor STC*	*Vortechs*	*Vortsentry*	*V2B1*
27.6			10060-DV				1421		
29.3			10080-DV				1421		
30.0			10080-DV				1522		
31.2			10080-DV				1522		
33.6			100100-DV				1522		
35.0			100100-DV				1624		
38.2			100100-DV				1624		
40.0			100100-DV				1726		
43.2			100100-DV				1726		
49.3			100100-DV						

TABLE 3 - STANDARD SEDIMENT STORAGE CAPACITY FOR CONNDOT APPROVED HYDRODYNAMIC SEPARATORS

Sediment Storage (cubic yards)	**Product Model**								
	Downstream Defender	*Flogard*	*High Eff. CDS*	*Hydroguard*	*Stormceptor OSR*	*Stormceptor STC*	*Vortechs*	*Vortsentry*	*V2B1*
0.3		DVS-36					1000		
0.5	4-ft								
0.6							2000		
0.7		DVS-48		HG 4					
0.8					065	450		VS30	2; 3
0.9			2015-4G; 2015-4						
1.0 (minimum)							3000		
1.1					140	900			
1.2				HG 5					
1.3		DVS-60							
1.4							4000	VS40	
1.5			2015; 2020; 2025						
1.6									4
1.7				HG 6					
1.8	6-ft					1200			
1.9							5000		
2.0									
2.1									
2.2		DVS-72						VS50	
2.3				HG 7					
2.4									6; 7
2.5							7000		
2.6			3020, 3020-D; 3030, 3030-DV, 3030-D; 3035, 3035-D						
2.9					250	2400			

TABLE 3 - STANDARD SEDIMENT STORAGE CAPACITY FOR CONNDOT APPROVED HYDRODYNAMIC SEPARATORS (continued)

Sediment Storage (cubic yards)	**Product Model**								
	Downstream Defender	*Flogard*	*High Eff. CDS*	*Hydroguard*	*Stormceptor OSR*	*Stormceptor STC*	*Vortechs*	*Vortsentry*	*V2B1*
3.0				HG 8					
3.1							9000	VS60	
3.2									8; 9
3.3						1800			
3.4									
3.5		DVS-84							
3.6									
3.7	8-ft		5640-D						
3.8				HG 9					
3.9							11000		
4.0									
4.2									10; 11; 12
4.3			4030-D; 4040-D; 4045-D					VS70	
4.5									
4.6									
4.7									13
5.0				HG 10					
5.1									
5.3		DVS-96	5042-DV; 5050-DV						
5.5									
5.6			4030; 4040; 4045; 5653-D; 5658-D; 5678-D				16000	VS80	
5.7									
6.0						3600			
6.5									

TABLE 3 - STANDARD SEDIMENT STORAGE CAPACITY FOR CONNDOT APPROVED HYDRODYNAMIC SEPARATORS (continued)

Sediment Storage (cubic yards)	Product Model								
	Downstream Defender	*Flogard*	*High Eff. CDS*	*Hydroguard*	*Stormceptor OSR*	*Stormceptor STC*	*Vortechs*	*Vortsentry*	*V2B1*
6.6							1319		
6.9									
7.0									
7.1									
7.2									
7.3									14; 15; 16; 17; 18
7.5				HG 12					
7.6							1421		
7.7									
8.0									
8.3									
8.4			7070-DV						
8.6						4800			
8.7	10-ft				390		1522	VS100	
9.0									
9.5									
9.6									
9.9							1624		
10.0									
10.3		DVS-120							
10.5									19; 20
11.0									
11.2							1726		
11.3						6000			
11.5									21; 22
11.8									

TABLE 3 - STANDARD SEDIMENT STORAGE CAPACITY FOR CONNDOT APPROVED HYDRODYNAMIC SEPARATORS (continued)

Sediment Storage (cubic yards)	**Product Model**								
	Downstream Defender	*Flogard*	*High Eff. CDS*	*Hydroguard*	*Stormceptor OSR*	*Stormceptor STC*	*Vortechs*	*Vortsentry*	*V2B1*
12.0									
12.6								VS120	25
12.9					560				
13.0									
13.4						7200			
15.0									
17.5					780				
17.8		DVS-144	10060-DV;10080-DV; 100100-DV						
20.0									
22.3									50
25.0									
25.8					1125				
26.1						11000s			
26.2									
30.0									
34.1						13000s			
34.9									60
35.0									
38.7									
40.0									
40.7						16000s			

TABLE 4 - SEDIMENT STORAGE CAPACITY CALCULATION

Product	Sediment Storage Capacity (Volume) Calculation (cubic feet)
Downstream Defender	Inside Diameter (ft^2) of Structure x Distance (ft) from Bottom of Benching Skirt to Inside Floor of Structure
FloGard® Dual-Vortex	Inside Diameter (ft^2) of Structure x 1/2 Distance (ft) from Bottom of Vortex Tube to Inside Floor of Structure
High Efficiency CDS	Inside Diameter (ft^2) of Structure x Depth (ft) of Solids Storage Sump
Hydroguard	Inside Diameter (ft^2) of Structure x 1/2 Depth (ft) Below Outer Baffle Wall
Stormceptor STC	Inside Diameter (ft^2) of Structure x 1/2 Depth (ft) Below Drop Tee Inlet Pipe
Stormceptor OSR	Inside Diameter (ft^2) of Structure x 1/2 Depth (ft) Below Drop Tee Inlet Pipe
Vortechs	Inside Diameter (ft^2) of Grit Chamber x 1/2 Depth (ft) Below Opening in Swirl Wall
Vortsentry	Inside Diameter (ft^2) of Structure x Depth (ft) of Sediment Storage Sump
V2B1	Inside Diameter (ft^2) of Structure (D1) x 1/2 Depth (ft) Below Pipe Invert
Note: 1 cubic foot = 0.037 cubic yard or 1 cubic yard = 27 cubic feet	

Since the selected hydrodynamic separator and associated connecting pipes and structures may be different in type, configuration and performance than the one assumed in the design phase of the project, the hydraulic calculations performed for the drainage design must be replicated and revised to reflect any adjustments necessary to the drainage design for installation of the selected system, such as different flow-line elevations, head loss coefficient, pipe sizes, etc. The selected hydrodynamic separator shall be designed so as not to change the drainage system upstream of the flow diversion structure or to increase the HGL elevation upstream of the flow diversion structure. Any modifications necessary to the overall drainage design as a result of the Contractor selected hydrodynamic separator shall be the responsibility of the Contractor.

The new HGL analysis must demonstrate the following conditions:

1. The hydrodynamic separator can treat the WQF with no bypass. The HGL elevation at the flow diversion structure for the WQF shall be below the weir elevation and/or elevation of flow bypass that is listed in the design data form or shown in the plans, so that all of the WQF is directed to the hydrodynamic separator for treatment. The HGL elevation in the hydrodynamic separator at the WQF shall be below the elevation of internal bypass so that all of the WQF is treated by the system.

2. When the drainage system is operating at the DDF, the hydraulic computations must show that the HGL elevation at the flow diversion structure is lower than or equal to the HGL elevation shown on Form A for the DDF and the HGL elevation in the hydrodynamic separator must be a minimum of one foot below the top (ground) elevation of the structure. A HGL elevation in the flow diversion structure for the DDF which is higher than the corresponding HGL elevation shown on Form A may be approved by the Engineer only if hydraulic computations are submitted showing that the higher HGL elevation will provide a minimum of one foot of freeboard below the top (ground) elevation of the flow diversion structure and the upstream drainage structures, satisfying the design criteria stated in the Connecticut Department of Transportation Drainage Manual. To demonstrate compliance, the hydraulic analysis shall be extended to a point upstream in the drainage system that is not influenced by the proposed changes and where the results converge with the previous design analysis. In such a case, the Contractor shall request a copy of the design analysis from the Department. A freeboard less than one foot may be accepted by the Engineer on a case by case basis provided that a justification of the reason has been included with the HGL analysis.

3. When the drainage system is operating at the DDF, the resulting HGL elevation and flow split at the flow diversion structure has been designed such that the portion of the DDF directed to the hydrodynamic separator does not exceed the maximum flow shown on the Hydrodynamic Separator Design Data Sheets (Form A - Design). Documentation, however, must be provided that the flow in excess of the WQF can pass through the device without washout of the previously captured sediment or the device is equipped with an internal bypass to route the excess flow around the treatment chamber.

Upon conclusion of the HGL analysis, the Hydrodynamic Separator Design Data Sheets (Form B – Contractor Proposal) shall be completed by entering the HGL analysis data and other required information.

Hydrodynamic Separator Selection: To ensure compliance with the special provision, the selection process of a proprietary hydrodynamic separator for installation on a Department project is outlined by the following steps:

1. First, select the available product(s) from Table 2 (**PERFORMANCE MATRIX FOR CONNDOT APPROVED HYDRODYNAMIC SEPARATORS**) that meet or exceed the WQF treatment specified on the Hydrodynamic Separator Design Data Sheets (Form A - Design) attached to this specification. **The Engineer shall reject any proposed hydrodynamic separator system/model that is not listed in Table 2.**

2. Using Table 3 (**STANDARD SEDIMENT STORAGE CAPACITY FOR CONNDOT APPROVED HYDRODYNAMIC SEPARATORS**), check whether the initially selected product(s) in Step 1, meet or exceed the minimum sediment storage requirement specified on the Hydrodynamic Separator Design Data Sheets (Form A - Design). In some cases, the required sediment storage capacity will govern the model size required for the project. In lieu of selecting a larger model to accommodate the sediment storage requirement, the Contractor may submit working drawings as recommended by the Manufacturer, showing how a standard model has been modified to satisfy the sediment storage requirement. When a modification is proposed by increasing the depth of the standard structure, **Table 4 (SEDIMENT STORAGE CAPACITY CALCULATION)** shall be utilized to determine the sediment storage capacity of the proposed structure.

3. **Hydrodynamic separator system/models pre-approval by the Department shall not be construed to mean that all products appearing on Tables 2 and 3 are suitable to any specific project site or drainage design.** The Contractor shall verify the constructability of the selected hydrodynamic separator in relation to dimensional, structural, geotechnical and right-of-way constraints at each installation site. If revisions to the drainage design, including the system layout, are required to accommodate the selected separator, the Contractor shall provide working drawings showing the revised layout, including the position of the hydrodynamic separator and the number, positions and types of connecting structures, the design of the flow diversion structure, and any other components of the system within the pay limits. The working drawings shall be prepared in sufficient detail to perform a hydraulic analysis and confirm that the layout will fit the constraints of each site.

4. Upon determination that the WQF, sediment storage and constructability requirements have been met, the Contractor shall prepare or have prepared, a HGL analysis in accordance with the hydraulic requirements of this special provision, that includes the selected hydrodynamic separator and any revisions to the drainage design needed for the installation.

5. The Hydrodynamic Separator Design Data Sheets (Form B – Contractor Proposal) shall be completed and signed by a professional engineer licensed by the State of Connecticut.

6. *Acceptance of the computations by the Engineer must be obtained by the Contractor prior to the purchase or installation of any units.*

Materials: Materials utilized to fabricate, construct and install the precast concrete hydrodynamic separator including but not limited to precast concrete units, brick, concrete masonry units, manhole frames and covers shall meet the requirements specified in the Standard Specifications, Form 816, Article M.08.02, except that the 28 day compressive strength specified in Subarticle M.08.02-4, shall be a minimum of 4000 psi (27.6 MPa).

The Contractor shall provide a Materials Certificate in accordance with 1.06.07 for each unit delivered to the project. Upon request, the Contractor shall also provide Certified Test Reports for the fine and coarse aggregates and all cementitious materials, and the concrete mix design indicating the weight of each component, used in the construction of the precast units for review. The structures shall not be shipped until released by the Contractor's Quality Control Manager or designee.

The wall and slabs of the precast concrete units shall be designed to sustain HS20-44 (MS18) loading requirements.

Manholes and Catch Basins shall conform to Section 5.07 of Form 816.

Granular fill shall conform to the requirements of Article M.02.01 of Form 816.

Non-shrink grout shall conform to the requirements of Subarticle M.03.01-12 of Form 816.

Drainage pipe, sealant and gaskets shall conform to the requirements of Article M.08.01 of Form 816.

Mortar shall conform to the requirements of Article M.11.04 of Form 816.

Sealant used for the hydrodynamic separator unit(s) shall be resistant to oil and other hydrocarbons and conform to the requirements of ASTM C-443.

Working Drawings: Working drawings in accordance with Article 1.05.02 – 2 shall be required for the system selected by the Contractor. The working drawings shall include the HGL analysis and all other computations in strict accordance with the "Hydraulic Design" section of this special provision, including a completed Form B – Contractor Proposal.

If revisions to the layout of the system within the payment limits of this item are required to accommodate the selected separator, the working drawings shall also include plans that show the required revisions. These plans shall show the revised position of the hydrodynamic separator unit(s), and all revisions to connecting structures, pipes, elevations, and details, including the design within the flow diversion structure. The revised plans shall also include the pay limit showing all the components of the system that are included in this lump sum pay item.

Working drawings shall also show details for construction, reinforcing joints, internal and external components, any cast-in-place appurtenances, locations and elevations of pipe openings, access manhole locations and elevations, and type / method of sealing pipe entrances.

Working drawings for each hydrodynamic separator on the project shall have all appropriate vertical dimensions referenced with elevations that are consistent with the project plans. In addition to any other structural, material or installation requirements, the working drawings shall clearly indicate the following information:

1. The elevation and flow rate when internal flow bypass would occur within the device.

2. The location, dimensions and volume (capacity) of the sediment storage area within the device.

The working drawings shall be sealed by a professional engineer licensed in the state where the devices are manufactured and that said engineer shall certify the device meets the minimum requirements of the ConnDOT Standards.

The working drawing submission by the Contractor shall consist of the following documents:

1. Working drawings for each hydrodynamic separator proposed for installation on the project.

2. Hydraulic design calculations including the head loss documentation and completed Hydrodynamic Separator Design Data Sheets (Form B – Contractor Proposal) with professional engineer signature for each hydrodynamic separator.

3. Copies of the pertinent construction plan, profile, cross section and detail sheets that have been annotated with any proposed drainage revisions that are required for the installation of the proposed hydrodynamic separator(s). If no changes are required, the submittal shall note same.

4. An Operations and Maintenance Manual for each hydrodynamic separator describing operations, inspection, maintenance procedures and any applicable warranty information.

Acceptance of the working drawing submission by the Engineer must be obtained by the Contractor prior to the fabrication of each hydrodynamic separator and diversion structure.

Construction Methods: The Contractor shall inspect the hydrodynamic separator and any accessory equipment upon delivery for general appearance, dimensions, soundness or damage in a manner acceptable to the Engineer. If any defects or damage are identified by the inspection, the unit shall be rejected by the Contractor and a new undamaged hydrodynamic separator shall be supplied. Any required adjustments of the separator shall be completed in accordance with Manufacturer's recommendations. A Manufacturer's representative and the Engineer will inspect the hydrodynamic separator before installation.

The Contractor shall install the hydrodynamic separator structure in accordance with the Manufacturer's recommendations unless otherwise directed by this specification or by the Engineer. The hydrodynamic separator shall be installed plumb, level and aligned both vertically and horizontally with the inlet and outlet piping. The hydrodynamic separator shall be placed on a compacted granular fill base in accordance with the Manufacturer's specifications or a minimum thickness of 6" (150mm) whichever is larger. Anchoring systems shall be installed, where needed, to resist buoyancy forces. Care shall be taken not to damage the hydrodynamic separator during backfill and compaction.

Pipe openings in the hydrodynamic separator shall be sized to accept pipes of the specified size(s) and material(s) as shown on the contract drawings and shall be sealed by the Contractor in accordance with the requirements of this specification. The inlet and outlet pipe connections shall be watertight. The hydrodynamic separator shall be tested for leakage according to the Manufacturer's specifications and to the satisfaction of the Engineer. Any leaks must be found and corrected to the satisfaction of the Engineer prior to acceptance of the structure.

Access openings with manhole frames and covers shall be provided to all chambers of the hydrodynamic separator. The access openings and pipe openings shall be detailed on the working drawings to be submitted by the Contractor for review and acceptance by the Engineer.

All connecting structures and pipes included within the payment limits for this work shall be constructed in accordance with the applicable requirements of Article 5.07.03 and Article 6.51.03.

Method of Measurement: Design, construction, furnishing, installation and cleaning of the hydrodynamic separator, the flow diversion structure, manholes and pipes as shown on the contract drawings, including all internal and external appurtenances and materials used, will be paid for on a lump sum basis per site.

Basis of Payment: This work will be paid for at the contract lump sum for "HYDRODYNAMIC SEPARATOR (SITE NO. 1)", complete in place, which price shall include all work within the pay limits shown on the contract drawings for hydrodynamic separator. If revisions to the layout of the system within the payment limits for this item are required to accommodate the selected separator, the lump sum price shall also include all additional or revised connecting structures and pipes. The contract lump sum shall include, but not be limited to, the following:

1. Design, preparation, revisions of working drawings and hydraulic computations.

2. Concrete and reinforcing steel, sealant, cement, mortar, flexible rubber sleeves, internal and external components, brick and masonry, frames and covers used to construct access manholes.

3. Flow diversion structure, manholes and pipes as shown on the contract drawings, or as revised and shown on submitted working drawings accepted by the Engineer.

4. Structure excavation, back fill, and disposal of surplus material.

5. Compacted granular fill.

6. Trench excavation and bedding material.

7. Cleaning of the Hydrodynamic Separator, flow diversion structure, manholes and pipes as shown on the contract drawings (of all debris every 90 days, or as needed), during the duration of the project, shall also be included in the price of this item.

8. The Operations and Maintenance Manual for each hydrodynamic separator.

The price shall include but not be limited to all materials, testing, equipment, tools and labor incidental thereto.

Attachments: The following documents are attached to this specification:

1. Hydrodynamic Separator Design Data Sheets (Form A – Design), Sheets 1 & 2 of 2.

2. Hydrodynamic Separator Design Data Sheets (Form B – Contractor Proposal), Sheets 1 & 2 of 2 (blank), to be completed and submitted with the working drawings.

Pay Item	**Pay Unit**
Hydrodynamic Separator (Site No. 1)	L.S.

CONNECTICUT DEPARTMENT OF TRANSPORTATION HYDRODYNAMIC SEPARATOR DESIGN DATA SHEETS (FORM A - DESIGN)

Project No	301-092	Route No.	N/A	Prepared By:	JAR	Date:	10/1/2013
Town	Greenwich	Location/Station	Upper Lot	Checked By:	JWB	Date:	10/1/2013
				Company:			

HYDROLOGIC DATA

Drainage Area (Acres)	1.338
Percent Impervious Area %	98
Time of Concentration (min.)	5
Drainage Design Flow (cfs)	6.45
Drainage Design Frequency (yr)	10
Water Quality Flow (cfs)	0.78

HYDRODYNAMIC SEPARATOR (HS)

Coordinates:		Datum:	
X:	774,790.50	Horiz.	State Plane NAD83
Y:	573,915.70	Vert.	NGVD-1929
Head loss coefficient		1.75	
Sediment Storage Capacity (cy):		HGL Elevation:	
Required	1.0	@ WQF	24.83
		@ Design Q	26.3
Maximum Flow to HS at Drainage Design Flow (cfs)			2.22

Comments:

FLOW DIVERSION STRUCTURE

Type	4' Diameter Manhole		
Weir and/or Bypass Elev.	24.90		
Weir Length (ft.)	4	Weir Coeff. (C)	3.3
HGL Elevation:		Flow Split @ Drainage Design Flow	
@ WQF	24.83	To HS	2.22
@ Design Q	26.56	Bypassing HS	4.23

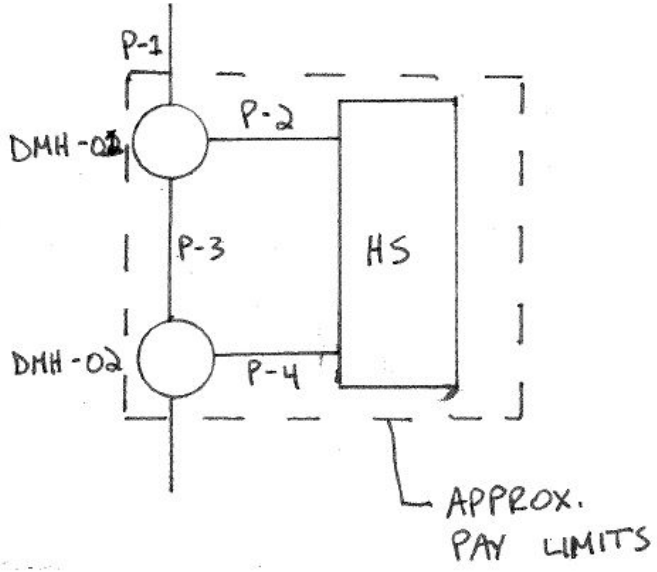

Sketch (NTS) - Indicate Pay limits

Comments:

Sheet 1 of 2

CONNECTICUT DEPARTMENT OF TRANSPORTATION HYDRODYNAMIC SEPARATOR DESIGN DATA SHEETS
(FORM A - DESIGN)

Project No:	*301-092*	**Location/Station:**	*Upper Lot*	**Date:**	*10/1/2013*

HYDRAULIC GRADE LINE ANALYSIS

Pipe	Downstream Str.	Pipe Size (in)	Flow (cfs)	Ground Elev. OUT (ft)	Invert Elev. OUT (ft)	HGL OUT (ft)	Depth OUT (ft)	Vel. Head OUT (ft)	EGL OUT (ft)	Length (ft)	Friction Slope (ft/ft)	Friction Loss (ft)	EGL IN (ft)	Vel. Head IN (ft)	HGL IN (ft)	Depth IN (ft)	Invert Elev. IN (ft)	Ground Elev. IN (ft)	Upstream Str.	Headloss Coeff.	Str. headloss (ft.)
			WQF																		
P-1	DET	12	0.78	31	24.1	24.47	0.37	0.13	24.61	5	0.005	0.03	24.71	0.13	24.57	0.37	24.2	30.9	DMH-01	1.00	0.13
P-2	DMH-01	12	0.78	30.9	24.2	24.57	0.37	0.13	24.71	5	0.005	0.03	24.74	0.13	24.61	0.38	24.23	30.5	HDS	1.75	0.23
P-3	DMH-01	12	0.00	30.9	24.2	.....	.....	.....	.....	5	.....	.....	.....	.....	.....	.....	24.9	30.5	DMH-02	.....	.....
P-4	HDS	12	0.78	30.50	24.24	24.83	0.60	0.04	24.87	5	0.001	0.01	24.88	0.05	24.83	0.55	24.28	30.5	DMH-02	1.00	0.05
	10	YR	DESIGN	FLOW																	
P-1	DET	12	6.46	31	24.1	25.09	0.99	1.06	26.15	5	0.03	0.15	26.3	1.05	25.25	1.00	24.2	30.9	DMH-01	1.00	1.05
P-2	DMH-01	12	2.23	30.90	24.20	26.30	1.00	0.13	26.43	5	0.004	0.02	26.45	0.13	26.32	1.00	24.23	30.50	HDS	1.75	0.22
P-3	DMH-01	12	4.23	30.90	24.20	26.54	1.00	0.13	26.67	5	0.004	0.02	26.69	0.13	26.56	1.00	24.28	30.50	DMH-02	1.00	0.13
P-4	HDS	12	2.23	30.50	24.24	26.30	1.00	0.45	26.75	5	0.0140	0.07	26.83	0.45	26.37	1.00	24.28	30.50	DMH-02	1.00	0.45

Sheet 2 of 2

CONNECTICUT DEPARTMENT OF TRANSPORTATION HYDRODYNAMIC SEPARATOR DESIGN DATA SHEETS (FORM B - CONTRACTOR PROPOSAL)

Project No		Route No.	
Town		Location/Station	

PE Signature:	
Name:	Date:
License No:	State:
Company:	

HYDROLOGIC DATA (Copy from FORM A - DESIGN)	
Drainage Area (Acres)	
% Impervious Area	
Time of Concentration (min.)	
Drainage Design Flow (cfs)	
Drainage Design Frequency (yr)	
Water Quality Flow (cfs)	

HYDRODYNAMIC SEPARATOR (HS)			
Manufacturer			
Model Name			
Model No.			
Coordinates:		Datum:	
X:		Horiz.	
Y:		Vert.	
Sediment Storage Capacity (cy):		HGL Elevation:	
Required		@ WQF	
Installed		@ Design Q	
Head loss coefficient			

FLOW DIVERSION STRUCTURE			
Type			
Weir and/or Bypass Elev.			
Weir Length (ft.)		Weir Coeff. (C)	
HGL Elevation:		Flow Split @ Drainage Design Flow (cfs):	
@ WQF		To HS	
@ Design Q		Bypassing HS	

Sketch (NTS)

Comments:

Sheet 1 of 2

CONNECTICUT DEPARTMENT OF TRANSPORTATION HYDRODYNAMIC SEPARATOR DESIGN DATA SHEETS (FORM B - CONTRACTOR PROPOSAL)

Project No:		Location/Station:		Date:	

HYDRAULIC GRADE LINE ANALYSIS

Pipe	Downstream Str.	Pipe Size (in)	Flow (cfs)	Ground Elev. OUT (ft)	Invert Elev. OUT (ft)	HGL OUT (ft)	Depth OUT (ft)	Vel. Head OUT (ft)	EGL OUT (ft)	Length (ft)	Friction Slope (ft/ft)	Friction Loss (ft)	EGL IN (ft)	Vel. Head IN (ft)	HGL IN (ft)	Depth IN (ft)	Invert Elev. IN (ft)	Ground Elev. IN (ft)	Upstream Str.	Headloss Coeff.	Str. headloss (ft.)

Sheet 2 of 2

ITEM #0507190A – OUTLET CONTROL STRUCTURE

Description: Under this item the contractor shall furnish and install a drainage outlet control structure as shown on the plans. The work includes all labor, equipment, and materials necessary to produce shop drawings, excavate, install and backfill to complete the drainage outlet control structure.

Materials: The materials to be used in the outlet control structure construction shall be those indicated on the plans or ordered by the Engineer and shall conform to Article M.08.02.

Construction Methods: All work shall conform to Section 5.07 of Form 816.

The Contractor shall submit shop drawings of the proposed outlet control structure for review and approval in accordance with Section 1.05.02.3 of Form 816.

Method of Measurement: This work will be measured as units.

Basis of Payment: This work will be paid for at the contract unit price each for "Outlet Control Structure" complete, which price shall include the concrete weir wall, keyways for the weir wall, orifice(s) of the diameter(s) shown on the plans, frames and covers, excavation and backfill and including all materials, tools, equipment, labor and work incidental thereto.

Pay Item	Pay Unit
Outlet Control Structure	Each

ITEM #0512016A – 8” HALF-ROUND STEEL DRAINAGE PIPE

5.12.01 Description: This work consists of fabricating and installing the railroad bridge deck drains as shown on the Plans. The deck drains consist of perforated half-round corrugated pipe sections with bottom pans to collect the water and collector troughs. The 4” diameter galvanized stubs are included in this item.

5.12.02 Materials: Sections of half-round galvanized corrugated metal pipe shall be fabricated from pipe that conforms to AASHTO M36 Type III with a minimum of 0.20 percent copper. The cutting of the corrugated metal pipe shall be by shearing or sawing. Flame cut edges will not be accepted. The pan for the half-round corrugated metal pipe shall be formed from galvanized iron or steel sheet that conforms to ASTM A444 with a minimum of 0.20 percent copper. The 4” diameter stub shall be made from the same material as the pan.

Miscellaneous structural steel required for the collector trough and 8” half-round steel drainage pipe shall be ASTM A709 Grade 36 galvanized in accordance with ASTM A123. Anchor bolts shall be ASTM A307 galvanized in accordance with ASTM A153.

5.12.03 Construction Methods: The deck drains shall be installed at the locations shown on the Plans after the waterproofing and ballast mat is in place and before the ballast is placed.

5.12.04 Method of Measurement: 8” Half-Round Steel Drainage Pipe shall be measured for payment by the number of linear feet of 8” half-round drainage pipe and drain pan installed and accepted in the finished structure without measurement of attachments or supports.

5.12.05 Basis of Payment: This work shall be paid for at the contract unit price per linear foot for “8” Half-Round Steel Drainage Pipe” complete, accepted in place, which price shall include deck drains, supports, collectors and all materials, equipment, tools, and labor incidental thereto.

Pay Item	Pay Unit
8” Half-Round Steel Drainage Pipe	L.F.

ITEM #0521021A - STEEL-LAMINATED ELASTOMERIC BEARINGS

Work under this item shall conform to the requirements of Section 5.21 amended as follows:

5.21.01 Description: Work of this section shall consist of furnishing and installing elastomeric bearing pads with internal steel laminae as shown on the Contract Drawings. The location, type and required load capacities of the bearings are shown on the Contract Drawings.

REFERENCES

Comply with the provisions of the following except as otherwise indicated:

A. AREMA Manual for Railway Engineering, Chapter 19, Section 1.6, "Elastomeric Bearings".

SUBMITTALS

A. Manufacturer's Data

Submit five (5) copies of producer's or manufacturer's specifications and installation instructions for the following products. Include laboratory test reports, certifications and other data as required to show compliance with these specifications.

1. Elastomeric (Neoprene) material (Durometer 60 min.), including certified copies of manufacturer's reports covering chemical and physical properties.

5.21.02 Materials:

A. Steel-Laminated Elastomeric Bearing.

1. Elastomer: The elastomeric compound used in the construction of a bearing shall contain only virgin chloroprene (Neoprene) as the raw polymer. The polymer shall not be less than 60 percent by volume of the total compound. No reclaimed rubber shall be used. The elastomeric compound shall be Type CR, Grade 3, as classified by ASTM D4014.

2. Laminae: Steel reinforcement for the elastomeric bearing shall be rolled from mild steel sheet conforming to ASTM A570, Grade 36 or 40, ASTM A611, Grade C or D, or an approved equal.

3. Manufacture: The steel-laminated elastomeric bearings shall be cast as a unit in a mold and bonded under heat. The molds shall have a standard shop practice finish.

The internal steel laminae shall be blasted and cleaned of all surface coatings, rust, and mill scale before bonding, and shall be free of sharp edges and burrs. It guide pins or other devices are used to control the side cover over the steel laminates, any exposed portions of the steel laminates shall be sealed by vulcanized patching.

Flash tolerance, finish and appearance of the finished bearings shall meet the requirements of the latest edition of the Rubber Handbook, published by the Rubber Manufacturer's Association, Inc., RMA F3 and T.063 for molded bearings.

All of the bearings shall be manufactured by the same company.

Steel-laminated bearings shall be built to the dimensions shown on the plans, and these specifications.

4. Fabrication:

   a. Fabricate and assemble structural assemblies in the shop.
   b. Properly mark and match-mark materials for field assembly. Fabricate for delivery sequence, which will expedite erection and minimize field handling of materials.
   c. Provide finish surfaces of members exposed in the final structure free of markings, burrs, and other defects.

5. Test Bearing: Three (3) test bearings shall be furnished to the Department for each size and type as indicated on the Contract Drawings, at no charge to the Department. The completed steel-laminated elastomeric bearing shall be subjected to the following tests:

Proof Load Test: All bearings shall be brought to a temperature of 73 degrees +/- 11 degrees Fahrenheit and tested at this temperature.

The manufacturer shall proof load each completed bearing with a compressive load equal to 1.5 times the maximum design load. The load shall be maintained while the bearing is inspected for visual faults. If bulging patterns imply laminate placement does not satisfy design criteria and manufacturing tolerance, or if bulging suggests poor laminate bond, the bearing shall be rejected. If there are three (3) separate surface cracks, which are greater than 0.8 inch wide and 0.08 inch deep, the bearing shall be rejected.

Compression Stiffness Tests: At random, a minimum of three (3) bearings shall be chosen from each lot for compressive stiffness testing. A lot consists of a single type of bearing, of the same design and manufactured from the same batch of elastomer, submitted for inspection at the same time. A

batch of elastomer in the quantity of elastomer prepared and compounded at one time. If the number in the lot exceeds 50, or part thereof, one additional bearing shall be taken for testing.

All bearings shall be brought to a temperature of 73 degrees +/- 11 degrees Fahrenheit and tested at this temperature.

Load the bearing to the design load by increments of one fifth the design load. For each load increment, the loading time shall be within the range of 1.4 to 2.6 minutes. When the increment has been applied, the load or deflection (depending on the type of testing machine) shall be maintained constant for 30 seconds then the load and deflection measured. From a plot of load against deflection, the compressive stiffness shall be determined as the slope of the best straight line through the points, ignoring the first point at zero load. Record the compressive stiffness for each bearing.

The compressive stiffness shall vary by no more than +/- 10% from the median value of all the bearings tested. For each bearing that fails to meet this requirement, two additional bearings shall be tested and shall meet the requirement or the lot shall be rejected.

If the lot is not rejected, the bearing median stiffness shall be subjected to the elastomeric material tests.

Elastomer Material Tests: The elastomer compound shall meet the requirement of ASTM D4014, Section 9.2-Elastomer Material Tests as amended as follows:

The elastomer shall have a Shore 'A' durometer hardness of 60 +/- 5 points as specified on the plans.

The shear modulus of the elastomer shall fall within the following limits:

Nominal Hardness (Shore 'A' Points)	Shear Modulus (psi)
60	120 to 160

The ozone test partial pressure shall be 100 millipascals (mpa).

5.21.03 Construction Methods:

Before fabricating any materials, the Contractor shall submit drawings to the Engineer for approval in accordance with Subarticle 1.05.03 (Shop Drawings). Theses drawings shall include, but not be limited to the following information: manufacturer's name, complete details of the bearings, material designations, nominal hardness of the elastomer and allowable shear modulus range, design load, the quantity of bearings required and the location of the bearing identification.

INSPECTION

Examine the areas and conditions under which the bearing installation is to be performed. Do not proceed with the work until unsatisfactory conditions have been corrected in an acceptable manner, as approved by the Engineer.

INSTALLATION

The bearings indicated on the Contract Drawings are shown for representative purposes. The Contractor may supply an alternate bearing design, subject to the approval of the Engineer. Alternate bearing designs shall be structurally equal in all respects to the representative bearings indicated.

The bearing area upon which the steel-laminated elastomeric bearings are to rest shall be carefully finished to a smooth, even level surface of the required elevation, and shall show no variations from a true plane greater than 1/16 of an inch over the entire area upon which the bearings are to rest.

The steel-laminated elastomeric bearings shall be installed when the temperature of the ambient air and the bearings is between 40 degrees to 80 degrees Fahrenheit and has been within this range for at least two (2) hours.

The bearings actually used shall be of such horizontal dimensions that each individual bearing will fit within the bridge seat or pedestal limits indicated on the Contract Drawings.

Vertical dimensions of the bearing may vary from those indicated on the Contract Drawings. However, the Contractor's submission shall indicate the adjustments to bridge seat, or to pedestal elevations necessary to maintain the established profile. Changes to the established profile will not be allowed. All approved adjustments to the bridge seat, or pedestal elevations will be done at no additional cost.

FIELD QUALITY CONTROL

Provide access for the Engineer to places where the bearings are being installed.

The Department reserves the right, at any time before final acceptance, to reject material not complying with specified requirements.

Correct deficiencies in the work, which inspections and laboratory test reports have indicated to be not in compliance with requirements. Perform additional tests as may be necessary to reconfirm any non-compliance of the original work, and as necessary to show compliance of corrected work.

5.21. 04 Method of Measurement: This work will be paid for at the number of cubic inches of elastomer of “Steel-Laminated Elastomeric Bearings,” which price shall include all equipment, tools, and labor incidental for completion.

5.21.05 Basis of Payment: This work will be paid for at the contract unit per cubic inch of "Steel-Laminated Elastomeric Bearings", complete in place, which price shall include all materials, testing, equipment, tools, and labor incidental thereto, including all costs of furnishing test bearings.

Pay Item	Pay Unit
Steel-Laminated Elastomeric Bearings	C.I.

ITEM #0601000A – CLASS A CONCRETE

Work under this item shall conform to the requirements of Section 6.01. amended and supplemented as follows:

6.01.02 Material: Section M.03.01 of the Standard Specification is modified for Class "A" Concrete:

For Class "A":Class "A" concrete shall have a minimum compressive strength (f'c) of 4,000 psi. The water/cement ratio shall not exceed 0.48. Cementitious material shall not be less than 708 pounds per cubic yard.

6.01.05 Basis of Payment: Delete the first paragraph and replace with the following:

The material will be paid for at the contract unit price per cubic yard for "Class A Concrete", complete in place, which price shall include all materials, equipment, tools, labor and work incidental thereto, including heating, all admixtures and joint sealer.

Pay Item	Pay Unit
Class A Concrete	C.Y.

ITEM #0601019A – CHEMICALLY STAINED CONCRETE

6.01.01 - Description: The work under this item shall include the color staining of concrete surfaces of the east abutment and wingwalls to match the natural stone color of the existing masonry units at the west abutment of the Sound Beach Avenue railroad bridge, Bridge No. 03948R in Greenwich. The work under this item shall also include the staining of concrete surfaces of the rear face of the parapet atop the retaining wall within the south parking lot.

6.01.02 - Materials: Color stain shall be a penetrating pigmented stain mix of a color closely matching the existing masonry at the site. The stain shall be a low viscosity, semi-opaque acrylic emulsion designed specifically for cementitious surfaces. Tinting pigments shall be inorganic oxides. Stain shall create a surface finish that is breathable (allows water vapor transmission) and that resists deterioration from water, acid, alkali, fungi and sunlight. Stain mix shall be a water borne, low V.O.C. material, less than 289 grams/liter, and shall meet requirements for weathering resistance of 2000 hours accelerated exposure in accordance with ASTM G23.

6.01.03 - Construction Methods: Prior to production work, the Contractor shall apply the color stain to a test area of concrete approximately 2' square in area to determine coloring. Procurement of material and production work shall not proceed until the Engineer has approved the color of the stain. The test area shall be a concrete sample constructed by the Contractor for the purpose of color testing.

Color staining shall be performed on concrete surfaces where noted on the plans including form lined surfaces for cast-in-place work and for pre-cast retaining wall panels. All surfaces to be stained shall have cured for a minimum of 30 days prior to staining including the curing of all patching materials.

Surfaces to be stained shall be cleaned prior to application to assure surface is free of latency, dirt, dust, grease, efflorescence, paint or other foreign materials following manufacturer's recommendations. Stain shall be applied in accordance with manufacturer's recommendations and completed surfaces shall be free of blemishes, discoloration, surface voids and unnatural form marks. Two coats shall be applied if necessary to achieve a uniform color without streaks or thin spots.

Application may be applied by brush, roller or spray as approved by the manufacturer, and application shall only be performed when weather conditions meet the manufacturer's requirements.

The Contractor shall protect all surfaces adjacent to the stained areas to avoid unintentional staining during the application process.

6.01.04 - Method of Measurement: This work will be measured for payment by the actual number of square feet of concrete stained and accepted within the limits shown on the contract plans or as ordered by the Engineer.

6.01.05 - Basis of Payment: This work will be paid at the contract unit price per square foot for "Chemically Stained Concrete", which price shall include all materials, equipment, tools and labor incidental thereto.

No additional payment will be made for the construction of the sample concrete for color staining, the test staining or the disposal of the sample concrete, such work shall be considered incidental to the production staining for this site.

Pay Item	Pay Unit
Chemically Stained Concrete	S.F.

ITEM #0601088A – CONCRETE FORM LINERS

6.01.01 - Description: This item shall consist of furnishing and installing textured, formed concrete surfaces using simulated stone molds (form liners) designed to duplicate closely the appearance of the existing cut stone masonry units at the west abutment of the Sound Beach Avenue railroad bridge, bridge no. 03948R in Greenwich. Form liners shall be furnished and installed, as described herein of the type and approximate size called for, including accessories and hardware in accordance with these specifications. The architectural form liner simulated stone masonry shall be monolithically formed with the concrete substructure. Color staining, if required, is not included under this item.

This item is applicable for the east abutment wall, northeast wingwall, and southeast wingwall at the Sound Beach Avenue railroad bridge, bridge no. 03948R in Greenwich, simulated stone masonry finish concrete work as well as the rear face of the parapet atop the retaining wall within the south parking lot.

6.01.02 - Materials:

1. Design and Pattern of Form Lined Surfaces: The design and pattern of form lined concrete surfaces shall be as described herein, and per the manufacturer's standard drawings. The form liner used for the cast in place walls at this site shall match the form liner used for the proprietary retaining walls proposed for use at this site.

Form liner shall consist of large rectangular stones of varying length as shown on the drawings. Pattern is random length running bond with a coursing dimension compatible with the standard wall units of the proprietary wall manufacturer. The pattern shall be a weathered limestone pattern, such as pattern #11261 as manufactured by Concrete Rock Surfaces, LLC of Bethel, CT, or approved equal. Outside vertical edge of each stone mirrors the opposing vertical outside edge. Top half of outside vertical edge is mirror image of bottom half of vertical edge. Horizontal edges are both straight. Pattern is designed to permit 180 degree rotation and interconnection with itself or another pattern liner of differing horizontal dimension. Maximum relief of pattern is approximately 4 5/8", and approximate average relief is 2 3/4". The stone pattern shall vary in a random manner within the coursing parameters to prevent noticeable multiple duplicate pattern repetition and avoid stacked joints.

The Contractor may propose alternate form liner patterns that are compatible with the wall manufacturer face panels and match the approximate size and pattern of the existing cut stone masonry walls at the west abutment of the Sound Beach Avenue railroad bridge, bridge no. 03948R.

2. Form Liner: Form liners shall be reusable, elastomeric form liners, made of high strength urethane, and cuttable form liners, made of lower grade urethane, easily attachable to

forms. The form liners shall leave crisp, sharp definition of the architectural surface. Recurring textural configurations exhibited by repeating, recognizable shadow patterns shall be prevented by proper casting of form liner patterns. The form liners shall not compress more than ¼ inch when concrete is poured at a rate of 10 vertical feet per hour. The form liners shall be removable without causing deterioration of surface or underlying concrete. No substitutions will be permitted. The form liner shall conform to the pattern shown on the plans or approved equal.

3. Release Agent: If a form release agent is used, it must be of a non-staining type. The release agent shall be compatible with the form liners, as recommended by the manufacturer. In addition, the release agent must be compatible with the color staining agent, as recommended by the manufacturer.

4. Form Ties: Form ties shall be designed to separate at least one inch back from the finished surface, leaving only a neat hole that can be plugged with patching material. The patching material shall match the color and texture of the concrete formed surface and be compatible with the color staining agent, where color staining is required.

6.01.03 - Construction Methods:

1. Quality of Work: The process of form lining and texturing the concrete shall be performed in strict accordance with the manufacturer's written recommendations and as approved by the Engineer.

2. Quality Assurance: The manufacturer of the form liner shall have a minimum of five years experience making custom simulated stone molds to create formed concrete surfaces to match natural stone shapes and surface textures.

The Contractor/Subcontractor (installer) shall have a minimum of five years experience pouring vertically formed architectural concrete. The installer shall be trained in any manufacturer's special techniques in order to achieve realistic surfaces.

A Pre-installation Meeting shall be scheduled with the manufacturer's representative, installer, and the Engineer to assure understanding of simulated stone masonry use, and to coordinate the work.

3. Shop Drawings and Submittals: Before fabricating any materials, the Contractor shall submit shop drawings, product data sheets, and samples to the Engineer for approval in accordance with Article 1.05.02 for the materials listed below. These drawings and submittals shall include, but not be limited to, the following information: manufacturer's name, listing of product compliance with referenced specification standards, complete details of the assemblies, material designations, nominal hardness of appropriate materials, design loads, quantities and locations. The Engineer's drawings shall not be reproduced, traced, or used for shop drawings or erection purposes.

Submittals:

Catalog cuts, manufacturer's literature, and technical data for the materials specified herein, including but not limited to simulated stone mold pattern, form liner, release agent and concrete patching material.

Photographs: Color photographs of three (3) similar past projects of the manufacturer. Include project names, locations and a telephone number of the previous Owner's representatives.

Samples: Form ties, sample and description, showing methods of separation when forms are removed.

Plan, elevation and details to show overall pattern, joint locations, form tie locations and end, edge and other special conditions. These drawings shall be based on field measurements taken by the Contractor, as required, to confirm the exact elevations and dimensions for the concrete surfaces requiring architectural treatment.

4. Protection: The Contractor shall be solely responsible for construction means and methods and for construction site safety precautions. The Contractor shall conduct construction operations in conformance with all applicable local, state and federal safety laws, rules, regulations and codes. All Material Safety Data Sheets (MSDS) shall be available for inspection.

5. Liner to Form Attachment System: Securely attach form liners to forms with wood or sheet metal screws; threaded inserts added to the back of the form liner for bolts to fasten the form liner through the forms, or; bolted through the face of the form liner with flathead bolts inserted in a pattern joint and through the form liner and forming system. Construction adhesives may be used, but not on reusable forms. Place adjacent form liners with less than ¼ inch separation between form liners.

6. Release of Form Liners from Hardened Concrete: Only manufacturer recommended form release agents shall be utilized and shall be applied to the form liners before the concrete is poured. Release agents shall be applied in strict accordance with release agent manufacturer recommendations. Hand-charged sprayers will only be allowed if a thin uniform coating of release agent is obtained on the form liner.

7. Removal of Form Liners: The form liner shall be removed from the wall within 24 hours of pouring the concrete. The form liners may be detached from the forms and then removed from the concrete, or they may remain attached to the forms and the entire forming system removed from the concrete. Remove the form liners from the top down. Curing of concrete may be accomplished with the form liners and forms placed back up against the wall

after the initial detachment. Curing shall be performed in accordance with Article 6.01.03-19. Curing compounds shall not be used.

8. Re-use of form liners: Form liners to be re-used by the Contractor shall be cleaned and handled in strict accordance with the manufacturer's recommendations. Minor cuts and tears in form liners shall be repaired in accordance with manufacturer's recommendations. Form liners with defects that would result in noticeable imperfections in finished concrete surfaces shall not be re-used, subject to the review of the Engineer.

9. Wall Patching and Preparation: After form liners are removed from the hardened concrete, the textured surfaces shall be prepared as follows. All holes larger than 1/2" in greatest principal dimension shall be filled with concrete patching material. All honeycombed areas shall be filled and textured to match surrounding areas. Seam lines and other unnatural protrusions shall be ground down to match adjacent areas with a hand-held power grinder using discs made for concrete. Grinding of seams shall be performed immediately after removal of the form liners. Perform final bush hammering to blend defects and ground areas into the final rock texture. In particular, the process of wall patching and preparation shall be subject to approval of the manufacturer and Engineer.

6.01.04 - Method of Measurement

This work shall be measured for payment by the actual number of square feet of the face area of accepted concrete form liner, cast-in-place concrete completed within the neat lines as shown on the plans, or as ordered by the Engineer. Face area of proprietary walls with architectural form lined concrete will not be measured for payment under this item. Architectural form lined surfaces on proprietary walls shall be included in the item "Retaining Wall".

6.01.05 - Basis of Payment

This work will be paid for at the contract unit price per square foot for "Concrete Form Liners", complete in place, which price shall include all equipment, formwork, molds, liners, caulk, patching material, tools and labor incidental thereto.

Color staining for the simulated stone masonry finish concrete work only, shall be payable under a separate item.

Pay Item	Pay Unit
Concrete Form Liners	S.F.

ITEM #0601108A – CONCRETE STAIRS

6.01.01 Description: Work under this item shall consist of furnishing and erecting cast in place and precast concrete stairs as shown on the plans for Concrete Stairs (NW-Stair No. 1), Concrete Stairs (NE-Stair No. 2), Concrete Stairs (SE-Stair No. 3), Concrete Stairs (SW-Stair No. 4), Concrete Stairs (Platform Access) and Concrete Stairs (Retaining Wall) including all materials, reinforcing, steel support posts, embedded angles, fasteners, anchors, equipment, tools, and labor incidental thereto.

6.01.02 Materials: All materials for new concrete stairs shall meet MTA Metro-North Railroad Station Standards including but not limited to the following:

Design shall conform to applicable state codes, ACI, ADA, ASTM and PCI and applicable industry standards.

Design live load shall be at least 150 psf (pounds per square foot).

A minimum compressive strength for all cast-in-place concrete shall be of 4,000 psi (pounds per square inch) at an age of 28 days. A minimum compressive strength for all precast concrete shall be 5,000 psi at an age of 28 days.

Cement shall conform to the requirements for either type II or Type IIA Portland Cement in accordance with ASTM C150. C3A content to be 8% maximum. Alkali content Na20+0.658 K20 less than 0.60%. Minimum cement content shall be 7.5 sacks/cubic yard.

Cast-in place for stairs and all precast concrete shall have 45 lbs./cy of microsilica added to the mix, for a total cementitious content of 720 lbs./cy. Microsilica admixture shall be Force 10,000, as manufactured by W.R. Grace & Co., or approved equal.

Concrete shall also contain DCI Corrosion inhibitor, as manufactured by W.R. Grace & Co., or approved equal. The dosage rate for the corrosion inhibitor shall be 3 gal./cy.

For cold weather applications, refer to the latest version of the State of Connecticut Department of Transportation's Standards and Specifications.

Air-entraining admixtures shall be in accordance with ASTM 260 and ASTM C138.

Accelerating admixtures shall be in accordance with ASTM C494.

6.01.03 Construction Methods: All new concrete stairs shall be constructed to MTA Metro-North Railroad Station Standards including but not limited to the following:

The members shall be manufactured in accordance with the plans.

Concrete shall be finished as follows:

-Rough form finish in areas not exposed to view (backfilled areas)

-Smooth finish in areas exposed to view (such as pier surfaces)

-Broom finish shall be utilized on all walking surfaces and finished perpendicular to the normal walking path to provide a wet-slip coefficient of 0.5 or greater.

-All exposed edges of concrete elements shall have a .75 inch chamber, unless otherwise provided.

Concrete shall be reinforced as follows:

-Reinforcing steel: ASTM A615, grade60, Hot-Dip Galvanized ASTM 767 (with supplementary requirements S1, S2, and S3, including Class 1 coating).

-Welded wire fabric: ASTM A185, 4 x 4-7/7, Hot-Dip Galvanized ASTM 767 (with supplementary requirements S1, S2, and S3, including Class 1 coating).

Shop Drawings: Before fabrication, the Contractor shall submit shop drawings to the Engineer for approval in accordance with Subarticle 1.05.02-3. These drawings shall include complete details of the methods, materials and equipment he proposes to use for the fabrication precast concrete.

Fabricator Qualifications: The precast concrete members shall be manufactured by a fabricator participating in the Prestressed Concrete Institute's (PCI) Plant Certification Program and be designated a PCI Certified Plant.

Erection Drawings: The Contractor shall prepare and submit erection drawings, signed and sealed by a Connecticut registered Professional Engineer for the erection of the precast stairs. The drawings shall describe all necessary temporary supports, including the sequence of installation. In addition, a description of the work methods, materials, and/or special equipment needed to complete the work of the section shall be provided.

6.01.04 Method of Measurement: This item, being paid for on a lump sum basis, will not be measured for payment.

6.01.05 Basis of Payment: This work will be paid for at the contract lump sum price for "Concrete Stairs", which price shall include all materials, reinforcing, steel support posts, embedded angles, fasteners, anchors, equipment, tools, and labor incidental thereto.

Pay Item	Pay Unit
Concrete Stairs	L.S.

ITEM #0601108A

ITEM #0601980A – PRECAST CONCRETE PLATFORM – TYPE 1 (10' WIDE)

ITEM #0601981A – PRECAST CONCRETE PLATFORM – TYPE 2 (8' WIDE)

6.01.01 Description: Work under this item shall consist of furnishing and erecting precast concrete platforms as shown on the plans, including all materials, tactile warning strips, plates, neoprene pads, fasteners, anchors, equipment, tools, and labor incidental thereto.

6.01.02 Materials: All materials for new platforms shall meet MTA Metro-North Railroad Station Standards including but not limited to the following:

Design shall conform to applicable state codes, ACI, ADA, ASTM and PCI and applicable industry standards.

Design live load shall be at least 150 psf (pounds per square foot).

A minimum compressive strength for all cast-in-place concrete shall be of 4,000 psi (pounds per square inch) at an age of 28 days. A minimum compressive strength for all precast concrete shall be 5,000 psi at an age of 28 days.

Cement shall conform to the requirements for either type II or Type IIA Portland Cement in accordance with ASTM C150. C3A content to be 8% maximum. Alkali content Na20+0.658 K20 less than 0.60%. Minimum cement content shall be 7.5 sacks/cubic yard.

Cast-in place for platform slabs and all precast concrete shall have 45 lbs./cy of microsilica added to the mix, for a total cementitious content of 720 lbs./cy. Microsilica admixture shall be Force 10,000, as manufactured by W.R. Grace & Co., or approved equal.

Concrete shall also contain DCI Corrosion inhibitor, as manufactured by W.R. Grace & Co., or approved equal. The dosage rate for the corrosion inhibitor shall be 3 gal./cy.

For cold weather applications, refer to the latest version of the State of Connecticut Department of Transportation's Standards and Specifications.

Air-entraining admixtures shall be in accordance with ASTM 260 and ASTM C138.

Accelerating admixtures shall be in accordance with ASTM C494.

The tactile warning strip shall be a prefabricated detectable warning surface tile chosen from the Department's Qualified Products List. The tile shall conform to the dimensions

shown on the plans and have a solid homogeneous color throughout in compliance with MNR Standards or approved equal.

6.01.03 Construction Methods: All new concrete platforms shall be constructed to MTA Metro-North Railroad Station Standards including but not limited to the following:

The members shall be manufactured in accordance with the plans.

Concrete shall be finished as follows:

-Rough form finish in areas not exposed to view (backfilled areas)
-Smooth finish in areas exposed to view (such as pier surfaces)
-Broom finish shall be utilized on all walking surfaces and finished perpendicular to the normal walking path to provide a wet-slip coefficient of 0.5 or greater.
-All exposed edges of concrete elements shall have a .75 inch chamber, unless otherwise provided.
-A 0.75 inch x 0.75 inch quarter round continuous parallel drip void shall be case into the underside edge of all platforms.

Concrete shall be reinforced as follows:

-Reinforcing steel: ASTM A615, grade60, Hot-Dip Galvanized ASTM 767 (with supplementary requirements S1, S2, and S3, including Class 1 coating).
-Welded wire fabric: ASTM A185, 4 x 4-7/7, Hot-Dip Galvanized ASTM 767 (with supplementary requirements S1, S2, and S3, including Class 1 coating).

New platform surfaces including the front vertical edge and the return to the drip notch under the platform edge shall be coated with a Silane sealer. After applying the Silane sealer, when the tactile warning strip is placed, the second coat shall also be applied over the front vertical edge, and to the drip notch under the platform edge. This product shall be a latex vinyl copolymer emulsion, and a factory apportioned catalyst with abrasion resistant aggregates and a Corrogard MCI.

The detectable warning strip shall be installed 4” from the edge of concrete platform along the full length of the platform as shown on the plans.

Shop Drawings: Before fabrication, the Contractor shall submit shop drawings to the Engineer for approval in accordance with Subarticle 1.05.02-3. These drawings shall include complete details of the methods, materials and equipment he proposes to use for the fabrication precast concrete.

Fabricator Qualifications: The precast concrete members shall be manufactured by a fabricator participating in the Prestressed Concrete Institute’s (PCI) Plant Certification Program and be designated a PCI Certified Plant.

Erection Drawings: The Contractor shall prepare and submit erection drawings, signed and sealed by a Connecticut registered Professional Engineer for the erection of the precast concrete

platforms. The drawings shall describe all necessary temporary supports, including the sequence of installation. In addition, a description of the work methods, materials, and/or special equipment needed to complete the work of the section shall be provided.

6.01.04 Method of Measurement: This work will be measured for payment by the actual number of linear feet of precast concrete platform and precast concrete platform installed and accepted. Measurement will be made along the centerline of each member.

6.01.05 Basis of Payment: Payment for this work will be made at the contract unit price per linear foot for "Precast Concrete Platform – Type 1 (10' Wide)" or "Precast Concrete Platform – Type 2 (8' Wide)", as shown on the plans, completed and accepted, including all materials, plates, neoprene pads, fasteners, anchors, equipment, tools, and labor incidental thereto.

Pay Item	**Pay Unit**
Precast Concrete Platform – Type 1 (10' Wide)	L.F.
Precast Concrete Platform – Type 2 (8' Wide)	L.F.

ITEM #0601980A
ITEM #0601981A

ITEM #0602936A – DRILLING AND GROUTING REINFORCING BARS

6.02.01 Description: This item shall consist of drilling, coring or a combination coring and drilling of holes in the structure and grouting bars into the holes. It shall also include all materials, including reinforcing bars, and all equipment, tools, and labor incidental thereto. All work shall be performed in accordance with the plans or as directed by the Engineer.

6.02.02 Materials: The grout shall be non-shrink grout conforming to the requirements of Sub article M.03.01-12.

6.02.03 Construction Methods: Holes shall be of the size and length and depth shown on the plans. If existing reinforcing bars are encountered during the drilling or coring operations, the holes shall be relocated to clear the existing reinforcing bars as directed by the Engineer and the pervious hole grouted in accordance with this specification. Care shall be taken not to damage exposed reinforcing bars. The Contractor is fully responsible for the type of drilling equipment used and as a result of any damage inflicted on the existing structure shall be repaired by the Contractor at no additional cost to the State.

Each finished hole shall be blown clean with an air jet flushed with a jet of clean water. In the water-flushing operation, the pressure hose shall be extended to the bottom of the hole several times and withdrawn gradually each time. After flushing, the vertical holes shall be left full of clean water for a period of six (6) hours. Immediately before the grouting operation on a hole, all water shall be removed from it and the free water on the wall of the hole shall be removed with an air jet or by use of clean rags.

The grout shall be mixed and placed strictly in accordance with the recommendations of the manufacturer. The grout shall completely fill the space around the reinforcing bar. Particular care shall be taken to conform to the manufacturer's specified time limit within which the grout must be placed after mixing. Grout that has begun to stiffen shall under no circumstances be re-tampered by adding water and remixing. Such grout shall be discarded.

If the grout shall be made sufficiently flowable without exceeding the manufacturer's recommended water content, the bar may be pushed into the holes, which have received enough grout so that the grout will be displaced to the top of the holes. Otherwise a smaller amount of grout shall be placed in the holes, the bar entered, and the holes filled with grout. The Contractor shall provide an approved means of keeping the bar centered in the tops and bottoms of the holes until the grout has thoroughly hardened.

6.02.04 Method of Measurement: This work will be measured by the number of linear feet of drilled or cored holes in which bars are embedded.

6.02.05 Basis of Payment: This item will be paid for at the contract unit price per linear foot of "Drilling and Grouting Reinforcing Bars", which price shall include, drilling or coring and preparing holes and grouting reinforcing bars. It shall also include all materials, including reinforcing bars, and all equipment, tools, and labor incidental thereto.

Pay Item	Pay Unit
Drilling and Grouting Reinforcing Bars	L.F.

ITEM #0603061A – STRUCTURAL STEEL (SITE NO. 1)

6.03.01 - Description: is supplemented as follows:

This special provision provides additional requirements for the surface preparation, shop painting, and field touch-up painting of new structural steel at Site No. 1.

Work under this item shall conform to the requirement of Section 6.03, supplemented and amended as follows:

6.03.02 – Materials: Following the second paragraph, add the following:

Painting materials for this work shall conform to the following:

- The Contractor shall select a three-coat system from the qualified products Lists A and B issued by the Northeast Protective Coating Committee (NEPCOAT), except System No. SSC(03)-02, comprised of Carbozinc 859 organic zinc rich primer, Carboguard 888 epoxy polyamide, and Carbothatne 133HB aliphatic Polyurethane that shall not be permitted. The approved NEPCOAT listings may be found at the NEPCOAT website at http://www.maine.gov/mdot/nepcoat/index. The system chosen shall have a prime coat that has achieved a Class 'B' slip coefficient Top coat paint color shall be as noted on the plans.

- Both the shop painted and field touchup applied coating systems shall be of the same three-coat system. The same coating material manufacturer shall furnish all materials for the complete coating system. Intermixing of materials within and between coating systems will not be permitted. Thinning of paint shall conform to the manufacturer's written instructions.

6.03.03 – Construction Methods: In Subarticle 4 "Field Erection" - part (f) "High Strength Bolted Connections" , the following revisions are made:

- Replace the first sentence of the fourth paragraph "Surface Conditions: At the time of…other foreign material " with the following:

  At the time of assembly, all connection faying surfaces shall be free of burrs, dirt or other foreign material. Faying surfaces within portions of structural steel designated to be uncoated shall be free of scale, except tightly adhered mill scale. Connection faying surfaces within portions of structural steel designated to be painted shall receive a single coat of primer in accordance with requirements stipulated elsewhere in this special provision.

- Delete the entire fifth paragraph: "Paint is permitted on…wire brushing is not permitted."

Following the last paragraph of the article, add the following:

The painting application shall be done in compliance with the following requirements:

Qualification of Shop Painting Firm: All shop painting of structural steel must be performed by and in an enclosed shop that is certified by the SSPC Painting Contractor Certification Program QP-3, entitled "Standard Procedure for Evaluating Qualifications of Shop Painting Contractors" in the enclosed shop category or that holds an AISC Quality Certificate with a "Sophisticated Paint Endorsement" in the enclosed shop category. They shall be fully certified, including endorsements, for the duration of the time they are performing the surface preparation and coating application. A copy of the subject certification shall be provided to the Engineer prior to commencing any surface preparation or coating application.

The complete coating system shall be applied in an enclosed shop except for field touch-up painting which shall be applied after all bolts are fully tensioned and deck formwork removed. The enclosed shop shall be a permanent facility with outside walls to grade and a roof where surface preparation and coating activities are normally conducted in an environment not subject to outdoor weather conditions and/or blowing dust.

Quality Control Inspection of Shop Painting: The firm performing shop painting of the structural steel shall have a written quality control (QC) program. A copy of the QC program and record keeping procedures shall be provided to the Engineer prior to commencing any surface preparation or coating application. The program shall contain, but not be limited to, the following:

1. Qualifications of QC staff.
2. Authority of QC staff. QC staff must have the authority to stop non-conforming work.
3. Procedure for QC staff to advise operation supervisor, in writing, of non-conforming work.
4. Sample copy of QC inspection reports that will document compliance with specification.
5. Procedure for calibrating inspection equipment and recording calibration.
6. Procedure for repairing defective coating applications.

The Contractor or Shop shall provide at least one Quality Control Inspector for the duration of the shop application to provide Quality Control. The QC Inspector must be a National Association of Corrosion Engineers (NACE) Coating Inspector Certificated with Peer Review. The QC Inspector shall verbally inform the Engineer on a daily basis, of the progress and any corrective actions performed on the coating work. The QC Inspector shall be present during all cleaning and coating operations.

The Contractor or Shop shall be responsible for purchasing and providing the latest version of the NACE Coating Inspector Log Book(s) and all necessary inspection tools. The Contractor's QC Inspector shall stamp the front page of each inspector's log book used during painting operations.

The stamped book(s) shall indicate the inspector's NACE certification number, certification expiration date and shall also be signed. All daily coating activity shall be recorded in the Log Book. Copies of the log entries shall be provided on a daily basis to the Department's Quality Assurance (QA) shop representative. Upon completion of the coating, the log book(s) shall then be furnished to the Department's QA shop representative.

Technical Advisor: The Contractor or Shop shall obtain the services of a technical advisor who is employed by the coating manufacturer to assist the Engineer and shop painting firm during this work. The technical advisor shall be a qualified representative and shall be made available at the Shop upon request by the QC Inspector or the Engineer.

Surface Preparation: The following shall be performed prior to abrasive blast cleaning of steel members:

- All corners and edges shall be rounded to a 1/16-inch radius or chamfered to a 1/16-inch chamfer.
- All fins, slivers and tears shall be removed and ground smooth.
- All rough surfaces shall be ground smooth.
- Flame cut edges shall be ground over their entire surface such that any hardened surface layer is removed, and subsequent abrasive blast cleaning produces the specified surface profile depth.

Immediately before abrasive blast cleaning all steel members shall be solvent cleaned in accordance with SSPC-SP1 - "Solvent Cleaning."

Abrasive blast cleaning shall be performed in accordance with SSPC-SP 10 - "Near White Blast Cleaning" using a production line shot and grit blast machine or by air blast. The abrasive working mix shall be maintained such that the final surface profile is within the range specified elsewhere in this specification.

The QC Inspector shall test the abrasive for oil, grease or dirt contamination in accordance with the requirements of ASTM D7393 and document the test results . Contaminated abrasive shall not be used to blast clean steel surfaces. The blast machine shall be cleared of all contaminated abrasive and then solvent cleaned thoroughly in accordance with SSPC-SP 1 "Solvent Cleaning". New uncontaminated abrasive shall be added. Abrasive shall be tested for contaminants in accordance with the requirements of ASTM D7393 prior to the start of blast cleaning operations and at least every four hours during the blast cleaning operations.

All compressed air sources shall have properly sized and designed oil and moisture separators, attached and functional, to allow air at the nozzle, either for blast cleaning, blow-off, painting or breathing, to be oil-free, and moisture-free. They shall have sufficient pressure to accomplish the associated work efficiently and effectively.

The QC Inspector shall perform the blotter test and document the results at the start of each blasting shift and at least every four hours during the blasting operation to ensure that the compressed air is

free of oil and moisture. The blotter test shall be performed in accordance with the procedure outlined in ASTM D4285. For contaminated air sources, the oil and moisture separators shall be drained and the air retested.

No surface preparation or coating shall be done when the relative humidity is at or above 80 percent or when the surface temperature of the steel is less than five (5) degrees Fahrenheit above the dewpoint temperature as determined by a surface thermometer and an electric or sling psychrometer.

Surface Profile: The steel surface profile shall be 1 to 3 mils. Each girder or beam shall have the surface profile measured at a minimum of three locations in accordance with the test requirements of ASTM D4417, Method C. Smaller pieces such as diaphragms shall have the surface profile measured at a minimum of three locations on one piece at the beginning of abrasive blast operations and at least every four hours and at the end of abrasive blast cleaning operations. This measurement shall be performed with both coarse (0.8-2.0 mils) and extra coarse (1.5-4.5 mils) replica tape. During this measurement, special attention shall be given to areas that may have been shielded from the blast wheels, such as the corners of stiffeners and connection plates. The impressed tapes shall be filed in the NACE Coating Inspector's Log Book. Note: When measuring the profile on the tape, 2 mils shall be subtracted (non-compressible mylar thickness) from the micrometer reading as indicated on each piece of tape.

A surface profile correction factor shall be measured in accordance with SSPC-PA 2 section 2.2.4 with a "Type 2" magnetic film thickness gage.

Application Methods: The coating system shall be applied by spray equipment of a type and size capable of applying each coat within the required thickness range. The applicator shall strictly adhere to the manufacturer's written recommendations about application methods, cure times, temperature and humidity restrictions and recoat times for each individual coat of the specified system. However, in no case shall coatings be applied in ambient conditions that exceed the relative humidity and dewpoint temperature control limits specified elsewhere within this special provision. Brushes shall be used in areas where spray application will not achieve acceptable results. Brushing technique shall be performed in a manner that will provide a uniform, blended finish.

Conventional spray equipment with mechanical agitators shall be used for prime coat application.

All storage, mixing, thinning, application and curing techniques and methods shall be accomplished in strict accordance with the printed material data sheets and application instructions published by the respective coating material manufacturer.

Surfaces shall be painted with the specified prime coat material before the end of the same work shift that they were blast cleaned and before any visible rust back occurs.Applied coatings shall not have runs, sags, holidays, pinholes or discontinuities.

The dry film thickness shall be within the range specified in the manufacturer's printed literature for the specified coating system. Dry film thickness shall be measured in accordance with SSPC-PA 2.

The prime, intermediate and top coats shall be of contrasting colors as determined by the Engineer. There shall be no color variation in the topcoat as determined by comparison with Federal Standard 595.

Areas Requiring Special Treatment: All steel surfaces shall receive the three-coat shop applied system as specified except the following particular area types which shall be treated as follows:

1) Faying surfaces of connections shall receive only a single application of primer. The dry film thickness shall be no greater than the thickness tested on the coating manufacturer's Certified Test Report for slip coefficient.

2) All steel surfaces within four (4) inches of field welds shall receive only a single mist coating of primer at 0.5 - 1.5 mils dry film thickness.

3) Top surfaces of top flanges that will be in contact with concrete shall receive only a single mist coating of primer at 0.5 - 1.5 mils dry film thickness.

4) Edges and shop welds shall be locally hand-striped with a brush in the longitudinal direction with an additional coat of an appropriate zinc-rich primer prior to application of the full intermediate coat. The application of the striping materials shall be in accordance with the coatings manufacturer’s written instructions. The striping material shall be a contrasting color to distinguish it from the primer and intermediate coats.

5) The interior surfaces of box girders, including bracing, shall be prepared in accordance with these specifications then coated with the first two coats of the three-coat system. The intermediate coat in these areas shall be white and match Federal Standard 595 Color Number 27925.

Adhesion: Adhesion strength of the fully coated assemblies shall be the more restrictive of the manufacturer’s specified adhesion strength or at least 600 psi for systems with organic zinc primers and at least 250 psi for systems with inorganic zinc rich primers measured as per ASTM D4541 using apparatus under Annex A4. All adhesion test locations shall be recoated in accordance with this specification at no additional cost. The QC Inspector shall perform adhesion strength tests every 500 sq. ft. and document the adhesion strength test results.

If adhesion test results are less than the specified value, but equal to or greater than 80% of the specified value, four (4) additional adhesion tests shall be taken within the 500 sq. ft. area of the failed test. If any of the additional adhesion tests are less than the specified value the coating shall be removed from the entire piece and re-applied at the Contractor’s expense. The entire coating system shall be removed from a piece if any adhesion tests are less than 80% of the specified value and re-applied at the Contractor’s expense.

Smaller pieces such as diaphragms shall be analyzed in lots that have an overall coated surface area of approximately 500 sq. ft.

Protection of Coated Structural Steel: All fully coated and cured assemblies shall be protected from handling and shipping damage with the prudent use of padded slings, dunnage, separators and tie downs. Loading procedures and sequences shall be designed to protect all coated surfaces. Erection marks for field identification of members and weight marks shall be affixed in such a manner as to facilitate removal upon final assembly without damage to the coating system.

Qualification of Field Touchup Painting Contractors: All painting contractors and painting subcontractors used for all field touchup painting must be certified by the SSPC Painting Contractor Certification Program (PCCP), QP-1, entitled "Standard Procedure for Evaluating Qualifications of Painting Contractors: Field Application to Complex Structures" at the time of field touchup coating application. This certification must be full and not interim. The painting contractors or subcontractors must remain so certified for the duration of the field coating application. If a contractor's or subcontractor's certification expires, the painting firm will not be allowed to perform any work until the certification is reissued. Requests for extension of time for any delay to the completion of the project due to an inactive certification will not be considered and liquidated damages will apply.

Quality Control Inspection of Field Touchup Painting: The contractor performing field touchup painting of the structural steel shall have a written quality control (QC) program. A copy of the QC program and record keeping procedures shall be provided to the Engineer prior to commencing any surface preparation or coating application. The program shall contain, but not be limited to, the following:

1. Qualifications of QC staff.
2. Authority of QC staff. QC staff must have the authority to stop non-conforming work.
3. Procedure for QC staff to advise operation supervisor, in writing, of non-conforming work.
4. Sample copy of QC inspection reports that will document compliance with specification.
5. Procedure for calibrating inspection equipment and recording calibration.
6. Procedure for repairing defective coating applications.

The Contractor shall provide at least one Coating Inspector who is Certificated and peer reviewed with the National Association of Corrosion Engineers (NACE) for the duration of the field application to provide Quality Control. The QC Inspector shall verbally inform the Engineer on a daily basis, of the progress and any corrective actions performed on the coating work. The QC Inspector shall be present during all cleaning and coating operations.

The Contractor shall be responsible for purchasing and providing the latest version of the NACE Coating Inspector Log Book(s) and all necessary inspection tools. The Contractor's QC Inspector shall stamp the front page of each inspector's log book used during painting operations. The stamped book(s) shall indicate the inspector's NACE certification number, certification expiration date and shall also be signed. All daily coating activity shall be recorded in the Log Book. Copies of the log entries shall be provided on a daily basis to the Department's Quality Assurance (QA) field representative. Upon completion of the coating, the log book(s) shall then be furnished to the Department's QA field representative.

Field Touch-Up Painting of Shop applied coating: The field applied coating for touchup painting shall be the same system used in the shop applied application. Field application of coatings shall be in accordance with the manufacturer's written application guidelines and these specifications. All areas cleaned to bare metal must be coated with zinc-rich primer before any visible rusting occurs. The intermediate and topcoat material for field touch-up painting shall be from the same lot and batch used in the shop provided its shelf life has not expired. If the shelf life has expired, the same material of the same color from a different lot and batch shall be used.

After all concrete is placed and the forms are removed, all rust, scale, dirt, grease, concrete splatter and other foreign material shall be completely removed from all painted surfaces. All surfaces to be field painted shall also be cleaned by solvent cleaning in accordance with SSPC-SP 1, hand tool cleaning SSPC-SP 2, and power tool cleaning SSPC-SP 3 and SSPC-SP 11. Areas cleaned to SSPC-SP 11 must have a 1-3 mil profile and must be primed prior to rusting. All debris generated from cleaning operations must be contained and properly disposed of by the Contractor.

Bolts, nuts, washers and surrounding areas shall receive brush applications of intermediate and topcoat after final tensioning. Careful attention shall be given to bolted connections to insure that all bolts, nuts and washers are fully coated and that no gaps are left unfilled and uncoated.

Field welds and surrounding areas shall be treated in the same manner as shop welded areas, including special treatment requirements.

Damage to the coating system that extends to the steel surface (such as scratches, gouges or nicks), shall have the entire three-coat system locally reapplied after power tool cleaning to bare metal in accordance with SSPC-SP 11. The coating system adjacent to the damage shall be feathered back to increase the surface area for touch up painting. The area cleaned to SSPC-SP 11 shall be primed with a zinc-rich primer before rusting occurs.

Damage to the coating system that extends back only to the prime or intermediate coat, shall only have the topcoat applied. Application of the touch-up materials in these damaged areas shall be performed by brush only.

General: The word "PAINTED", followed by the month and year the painting of the structure is completed along with the ConnDOT Project Number and the manufacturer's abbreviations for each of the three coats, shall be stenciled on the inside of a fascia girder at mid-depth of the girder in three (3) inch high block letters located near the abutment, so as to be clearly visible from the ground below. Paint for stenciling information shall be of a contrasting color and be compatible with the topcoat.

6.03.05 – Basis of Payment: Add the following at the end of the second paragraph:
Payment for either method for structural steel, complete in place, shall also include painting, equipment, tools and labor incidental thereto.

Pay Item	Pay Unit
Structural Steel (Site No. 1)	L.S.

ITEM #0603062A – STRUCTURAL STEEL (SITE NO. 2)

6.03.01 - Description: is supplemented as follows:

This special provision provides additional requirements for the surface preparation, shop painting, and field touch-up painting of new structural steel at Site No. 2.

Work under this item shall conform to the requirement of Section 6.03, supplemented and amended as follows:

6.03.02 – Materials: Following the second paragraph, add the following:

Painting materials for this work shall conform to the following:

- The Contractor shall select a three-coat system from the qualified products Lists A and B issued by the Northeast Protective Coating Committee (NEPCOAT), except System No. SSC(03)-02, comprised of Carbozinc 859 organic zinc rich primer, Carboguard 888 epoxy polyamide, and Carbothatne 133HB aliphatic Polyurethane that shall not be permitted. The approved NEPCOAT listings may be found at the NEPCOAT website at http://www.maine.gov/mdot/nepcoat/index. The system chosen shall have a prime coat that has achieved a Class 'B' slip coefficient Top coat paint color shall be as noted on the plans.

- Both the shop painted and field touchup applied coating systems shall be of the same three-coat system. The same coating material manufacturer shall furnish all materials for the complete coating system. Intermixing of materials within and between coating systems will not be permitted. Thinning of paint shall conform to the manufacturer's written instructions.

6.03.03 – Construction Methods: In Subarticle 4 "Field Erection" - part (f) "High Strength Bolted Connections" , the following revisions are made:

- Replace the first sentence of the fourth paragraph "Surface Conditions: At the time of…other foreign material " with the following:

  At the time of assembly, all connection faying surfaces shall be free of burrs, dirt or other foreign material. Faying surfaces within portions of structural steel designated to be uncoated shall be free of scale, except tightly adhered mill scale. Connection faying surfaces within portions of structural steel designated to be painted shall receive a single coat of primer in accordance with requirements stipulated elsewhere in this special provision.

- Delete the entire fifth paragraph: "Paint is permitted on…wire brushing is not permitted."

Following the last paragraph of the article, add the following:

The painting application shall be done in compliance with the following requirements:

Qualification of Shop Painting Firm: All shop painting of structural steel must be performed by and in an enclosed shop that is certified by the SSPC Painting Contractor Certification Program QP-3, entitled "Standard Procedure for Evaluating Qualifications of Shop Painting Contractors" in the enclosed shop category or that holds an AISC Quality Certificate with a "Sophisticated Paint Endorsement" in the enclosed shop category. They shall be fully certified, including endorsements, for the duration of the time they are performing the surface preparation and coating application. A copy of the subject certification shall be provided to the Engineer prior to commencing any surface preparation or coating application.

The complete coating system shall be applied in an enclosed shop except for field touch-up painting which shall be applied after all bolts are fully tensioned and deck formwork removed. The enclosed shop shall be a permanent facility with outside walls to grade and a roof where surface preparation and coating activities are normally conducted in an environment not subject to outdoor weather conditions and/or blowing dust.

Quality Control Inspection of Shop Painting: The firm performing shop painting of the structural steel shall have a written quality control (QC) program. A copy of the QC program and record keeping procedures shall be provided to the Engineer prior to commencing any surface preparation or coating application. The program shall contain, but not be limited to, the following:

1. Qualifications of QC staff.
2. Authority of QC staff. QC staff must have the authority to stop non-conforming work.
3. Procedure for QC staff to advise operation supervisor, in writing, of non-conforming work.
4. Sample copy of QC inspection reports that will document compliance with specification.
5. Procedure for calibrating inspection equipment and recording calibration.
6. Procedure for repairing defective coating applications.

The Contractor or Shop shall provide at least one Quality Control Inspector for the duration of the shop application to provide Quality Control. The QC Inspector must be a National Association of Corrosion Engineers (NACE) Coating Inspector Certificated with Peer Review. The QC Inspector shall verbally inform the Engineer on a daily basis, of the progress and any corrective actions performed on the coating work. The QC Inspector shall be present during all cleaning and coating operations.

The Contractor or Shop shall be responsible for purchasing and providing the latest version of the NACE Coating Inspector Log Book(s) and all necessary inspection tools. The Contractor's QC Inspector shall stamp the front page of each inspector's log book used during painting operations.

The stamped book(s) shall indicate the inspector's NACE certification number, certification expiration date and shall also be signed. All daily coating activity shall be recorded in the Log Book. Copies of the log entries shall be provided on a daily basis to the Department's Quality Assurance (QA) shop representative. Upon completion of the coating, the log book(s) shall then be furnished to the Department's QA shop representative.

Technical Advisor: The Contractor or Shop shall obtain the services of a technical advisor who is employed by the coating manufacturer to assist the Engineer and shop painting firm during this work. The technical advisor shall be a qualified representative and shall be made available at the Shop upon request by the QC Inspector or the Engineer.

Surface Preparation: The following shall be performed prior to abrasive blast cleaning of steel members:

- All corners and edges shall be rounded to a 1/16-inch radius or chamfered to a 1/16-inch chamfer.
- All fins, slivers and tears shall be removed and ground smooth.
- All rough surfaces shall be ground smooth.
- Flame cut edges shall be ground over their entire surface such that any hardened surface layer is removed, and subsequent abrasive blast cleaning produces the specified surface profile depth.

Immediately before abrasive blast cleaning all steel members shall be solvent cleaned in accordance with SSPC-SP1 - "Solvent Cleaning."

Abrasive blast cleaning shall be performed in accordance with SSPC-SP 10 - "Near White Blast Cleaning" using a production line shot and grit blast machine or by air blast. The abrasive working mix shall be maintained such that the final surface profile is within the range specified elsewhere in this specification.

The QC Inspector shall test the abrasive for oil, grease or dirt contamination in accordance with the requirements of ASTM D7393 and document the test results . Contaminated abrasive shall not be used to blast clean steel surfaces. The blast machine shall be cleared of all contaminated abrasive and then solvent cleaned thoroughly in accordance with SSPC-SP 1 "Solvent Cleaning". New uncontaminated abrasive shall be added. Abrasive shall be tested for contaminants in accordance with the requirements of ASTM D7393 prior to the start of blast cleaning operations and at least every four hours during the blast cleaning operations.

All compressed air sources shall have properly sized and designed oil and moisture separators, attached and functional, to allow air at the nozzle, either for blast cleaning, blow-off, painting or breathing, to be oil-free, and moisture-free. They shall have sufficient pressure to accomplish the associated work efficiently and effectively.

The QC Inspector shall perform the blotter test and document the results at the start of each blasting shift and at least every four hours during the blasting operation to ensure that the compressed air is

free of oil and moisture. The blotter test shall be performed in accordance with the procedure outlined in ASTM D4285. For contaminated air sources, the oil and moisture separators shall be drained and the air retested.

No surface preparation or coating shall be done when the relative humidity is at or above 80 percent or when the surface temperature of the steel is less than five (5) degrees Fahrenheit above the dewpoint temperature as determined by a surface thermometer and an electric or sling psychrometer.

Surface Profile: The steel surface profile shall be 1 to 3 mils. Each girder or beam shall have the surface profile measured at a minimum of three locations in accordance with the test requirements of ASTM D4417, Method C. Smaller pieces such as diaphragms shall have the surface profile measured at a minimum of three locations on one piece at the beginning of abrasive blast operations and at least every four hours and at the end of abrasive blast cleaning operations. This measurement shall be performed with both coarse (0.8-2.0 mils) and extra coarse (1.5-4.5 mils) replica tape. During this measurement, special attention shall be given to areas that may have been shielded from the blast wheels, such as the corners of stiffeners and connection plates. The impressed tapes shall be filed in the NACE Coating Inspector's Log Book. Note: When measuring the profile on the tape, 2 mils shall be subtracted (non-compressible mylar thickness) from the micrometer reading as indicated on each piece of tape.

A surface profile correction factor shall be measured in accordance with SSPC-PA 2 section 2.2.4 with a "Type 2" magnetic film thickness gage.

Application Methods: The coating system shall be applied by spray equipment of a type and size capable of applying each coat within the required thickness range. The applicator shall strictly adhere to the manufacturer's written recommendations about application methods, cure times, temperature and humidity restrictions and recoat times for each individual coat of the specified system. However, in no case shall coatings be applied in ambient conditions that exceed the relative humidity and dewpoint temperature control limits specified elsewhere within this special provision. Brushes shall be used in areas where spray application will not achieve acceptable results. Brushing technique shall be performed in a manner that will provide a uniform, blended finish.

Conventional spray equipment with mechanical agitators shall be used for prime coat application.

All storage, mixing, thinning, application and curing techniques and methods shall be accomplished in strict accordance with the printed material data sheets and application instructions published by the respective coating material manufacturer.

Surfaces shall be painted with the specified prime coat material before the end of the same work shift that they were blast cleaned and before any visible rust back occurs.Applied coatings shall not have runs, sags, holidays, pinholes or discontinuities.

The dry film thickness shall be within the range specified in the manufacturer's printed literature for the specified coating system. Dry film thickness shall be measured in accordance with SSPC-PA 2.

The prime, intermediate and top coats shall be of contrasting colors as determined by the Engineer. There shall be no color variation in the topcoat as determined by comparison with Federal Standard 595.

Areas Requiring Special Treatment: All steel surfaces shall receive the three-coat shop applied system as specified except the following particular area types which shall be treated as follows:

1) Faying surfaces of connections shall receive only a single application of primer. The dry film thickness shall be no greater than the thickness tested on the coating manufacturer's Certified Test Report for slip coefficient.

2) All steel surfaces within four (4) inches of field welds shall receive only a single mist coating of primer at 0.5 - 1.5 mils dry film thickness.

3) Top surfaces of top flanges that will be in contact with concrete shall receive only a single mist coating of primer at 0.5 - 1.5 mils dry film thickness.

4) Edges and shop welds shall be locally hand-striped with a brush in the longitudinal direction with an additional coat of an appropriate zinc-rich primer prior to application of the full intermediate coat. The application of the striping materials shall be in accordance with the coatings manufacturer’s written instructions. The striping material shall be a contrasting color to distinguish it from the primer and intermediate coats.

5) The interior surfaces of box girders, including bracing, shall be prepared in accordance with these specifications then coated with the first two coats of the three-coat system. The intermediate coat in these areas shall be white and match Federal Standard 595 Color Number 27925.

Adhesion: Adhesion strength of the fully coated assemblies shall be the more restrictive of the manufacturer’s specified adhesion strength or at least 600 psi for systems with organic zinc primers and at least 250 psi for systems with inorganic zinc rich primers measured as per ASTM D4541 using apparatus under Annex A4. All adhesion test locations shall be recoated in accordance with this specification at no additional cost. The QC Inspector shall perform adhesion strength tests every 500 sq. ft. and document the adhesion strength test results.

If adhesion test results are less than the specified value, but equal to or greater than 80% of the specified value, four (4) additional adhesion tests shall be taken within the 500 sq. ft. area of the failed test. If any of the additional adhesion tests are less than the specified value the coating shall be removed from the entire piece and re-applied at the Contractor’s expense. The entire coating system shall be removed from a piece if any adhesion tests are less than 80% of the specified value and re-applied at the Contractor’s expense.

Smaller pieces such as diaphragms shall be analyzed in lots that have an overall coated surface area of approximately 500 sq. ft.

Protection of Coated Structural Steel: All fully coated and cured assemblies shall be protected from handling and shipping damage with the prudent use of padded slings, dunnage, separators and tie downs. Loading procedures and sequences shall be designed to protect all coated surfaces. Erection marks for field identification of members and weight marks shall be affixed in such a manner as to facilitate removal upon final assembly without damage to the coating system.

Qualification of Field Touchup Painting Contractors: All painting contractors and painting subcontractors used for all field touchup painting must be certified by the SSPC Painting Contractor Certification Program (PCCP), QP-1, entitled "Standard Procedure for Evaluating Qualifications of Painting Contractors: Field Application to Complex Structures" at the time of field touchup coating application. This certification must be full and not interim. The painting contractors or subcontractors must remain so certified for the duration of the field coating application. If a contractor's or subcontractor's certification expires, the painting firm will not be allowed to perform any work until the certification is reissued. Requests for extension of time for any delay to the completion of the project due to an inactive certification will not be considered and liquidated damages will apply.

Quality Control Inspection of Field Touchup Painting: The contractor performing field touchup painting of the structural steel shall have a written quality control (QC) program. A copy of the QC program and record keeping procedures shall be provided to the Engineer prior to commencing any surface preparation or coating application. The program shall contain, but not be limited to, the following:

1. Qualifications of QC staff.
2. Authority of QC staff. QC staff must have the authority to stop non-conforming work.
3. Procedure for QC staff to advise operation supervisor, in writing, of non-conforming work.
4. Sample copy of QC inspection reports that will document compliance with specification.
5. Procedure for calibrating inspection equipment and recording calibration.
6. Procedure for repairing defective coating applications.

The Contractor shall provide at least one Coating Inspector who is Certificated and peer reviewed with the National Association of Corrosion Engineers (NACE) for the duration of the field application to provide Quality Control. The QC Inspector shall verbally inform the Engineer on a daily basis, of the progress and any corrective actions performed on the coating work. The QC Inspector shall be present during all cleaning and coating operations.

The Contractor shall be responsible for purchasing and providing the latest version of the NACE Coating Inspector Log Book(s) and all necessary inspection tools. The Contractor's QC Inspector shall stamp the front page of each inspector's log book used during painting operations. The stamped book(s) shall indicate the inspector's NACE certification number, certification expiration date and shall also be signed. All daily coating activity shall be recorded in the Log Book. Copies of the log entries shall be provided on a daily basis to the Department's Quality Assurance (QA) field representative. Upon completion of the coating, the log book(s) shall then be furnished to the Department's QA field representative.

Field Touch-Up Painting of Shop applied coating: The field applied coating for touchup painting shall be the same system used in the shop applied application. Field application of coatings shall be in accordance with the manufacturer's written application guidelines and these specifications. All areas cleaned to bare metal must be coated with zinc-rich primer before any visible rusting occurs. The intermediate and topcoat material for field touch-up painting shall be from the same lot and batch used in the shop provided its shelf life has not expired. If the shelf life has expired, the same material of the same color from a different lot and batch shall be used.

After all concrete is placed and the forms are removed, all rust, scale, dirt, grease, concrete splatter and other foreign material shall be completely removed from all painted surfaces. All surfaces to be field painted shall also be cleaned by solvent cleaning in accordance with SSPC-SP 1, hand tool cleaning SSPC-SP 2, and power tool cleaning SSPC-SP 3 and SSPC-SP 11. Areas cleaned to SSPC-SP 11 must have a 1-3 mil profile and must be primed prior to rusting. All debris generated from cleaning operations must be contained and properly disposed of by the Contractor.

Bolts, nuts, washers and surrounding areas shall receive brush applications of intermediate and topcoat after final tensioning. Careful attention shall be given to bolted connections to insure that all bolts, nuts and washers are fully coated and that no gaps are left unfilled and uncoated.

Field welds and surrounding areas shall be treated in the same manner as shop welded areas, including special treatment requirements.

Damage to the coating system that extends to the steel surface (such as scratches, gouges or nicks), shall have the entire three-coat system locally reapplied after power tool cleaning to bare metal in accordance with SSPC-SP 11. The coating system adjacent to the damage shall be feathered back to increase the surface area for touch up painting. The area cleaned to SSPC-SP 11 shall be primed with a zinc-rich primer before rusting occurs.

Damage to the coating system that extends back only to the prime or intermediate coat, shall only have the topcoat applied. Application of the touch-up materials in these damaged areas shall be performed by brush only.

General: The word "PAINTED", followed by the month and year the painting of the structure is completed along with the ConnDOT Project Number and the manufacturer's abbreviations for each of the three coats, shall be stenciled on the inside of a fascia girder at mid-depth of the girder in three (3) inch high block letters located near the abutment, so as to be clearly visible from the ground below. Paint for stenciling information shall be of a contrasting color and be compatible with the topcoat.

6.03.05 – Basis of Payment: Add the following at the end of the second paragraph:
Payment for either method for structural steel, complete in place, shall also include painting, equipment, tools and labor incidental thereto.

Pay Item	Pay Unit
Structural Steel (Site No. 2)	L.S.

ITEM #0603371A– MATERIALS FOR STRUCTURAL STEEL (SITE NO. 1)

6.03.01 Description: There will be no actual contract work under these contract items. These items are to be utilized to pay for the material cost of structural steel (plates and shapes) for the bridge at Site No. 1 to ensure that the payment for these materials reflects the current market price at the time that the order for these materials is actually placed.

Tabulated data for the structures are listed in the following table. The values provided are estimates only and are not guaranteed to be accurate. Bidders shall examine the listed structures and shall make their own determinations as to the work involved and conditions to be encountered.

Table 1 – ESTIMATED WEIGHTS, LENGTHS AND MISCELLANEOUS DATA:

Site No.	Bridge No.	No. of Spans**	Est. Weight of Struct. Steel* (cwt)	Length of Bridge** (feet)
1	03948R	1	3742	54

* Estimated values include Allowable overruns or waste.
** Span lengths are based on center to center of bearings.

The Bid Proposal form contains an estimated cost for the materials. These costs are not to be altered on the bid proposal, but are to be carried forward with the Contractor's bid prices. The Contractor is to ensure that the cost of structural steel raw plates and shapes required for the bridge is not included in the item "Structural Steel." Only the raw material costs, excluding any mark-up are to be paid for under this item. All other costs, including but not limited to preparation of shop drawings, handling, fabrication, transportation of fabricated shapes, storage, erection, surface preparation, painting, galvanizing, shop operation, and all materials, equipment, tools and labor incidental thereto, is to be paid for under the item "Structural Steel."

At least two weeks prior to the scheduled date for award of the Contract, the Contractor shall submit notarized affidavit(s) which includes copies of the mill or warehouse price quotes that the Contractor has received for the structural steel raw plates and shapes material for each site. The affidavit(s) must include any quotes of the latest mill prices as well as any such warehouse quotes for each type of structural steel raw plates and/or structural steel shapes material. Said

submission shall also list the approximate net weight (mass) of each type of structural steel raw plates and or structural steel shapes material required. These pre-award price quote affidavits shall establish the original price for each type of structural steel raw plates and shapes material for each site.

This provision does not relieve the responsibility of the Contractor for ordering the steel in a timely manner so as not to delay the performance of the Contract work.

6.03.02 Materials: The materials being paid for under this item shall conform to Section 6.03 of these Contract documents.

6.03.03 Construction Methods: N/A

6.03.04 Method of Measurement: When Shop Drawings for "Structural Steel (Site No.)" are submitted, they must be accompanied by a bill of raw materials which describes the raw plate and shapes stock necessary for the bridge. The actual weight of the finished shapes shall be referred to as the Fabricated Weight. Only the weights for the actual steel framing, including stiffeners, connection plates and diaphragms are to be included in the Fabricated Weight calculations. Sole, masonry, and shim plates, bolts and pins, or welds, as well as all other miscellaneous steel are to be excluded from the Fabricated Weight. The amount of waste generated from the fabrication will also be calculated and included with the shop drawings. However, Payment for waste weight, referred to as Allowable Waste, will be limited to 10% of the Fabricated Weight for straight girders and 15% of the Fabricated Weight for curved girders for each site.

The Contractor is to submit these weight calculations with the shop drawings and receive approval prior to payment for the materials. Failure to submit the Fabricated Weight calculations, waste calculations or a bill of raw materials will result in the rejection of the shop drawings.

Two (2) weeks before the date, on which the Contractor intends to order material, the Contractor shall submit the details of any such intended order to the Engineer. This submittal shall include the following;

1. A detailed description of the materials to be ordered cross referenced to the bill of raw materials for each site.
2. A notarized affidavit which includes copies of the latest mill or warehouse price quotes that the Contractor has received for any and all such items. It is intended that these quotes will be from multiple mills when applicable. If the Contractor chooses not to purchase materials from the lowest quoted source, the Contractor shall provide documentation to the Department describing the reasons for such decision

Upon purchase of materials, the contractor shall submit copies of the actual invoices with a notarized affidavit stating that the invoices are for materials purchased. The invoices shall include the same detail as the previously submitted price quotes.

The payment for material will be based on the actual invoice price as shown on the invoice received for materials purchased subject to the limits on the material waste noted above.

If the order weight exceeds the Allowable Weight (Fabricated Weight plus the Allowable Waste), and if a unit prices cannot be clearly identified, from the actual invoices, for the exceedance, the total value of the order(s) will be proportionately reduced in relation to the allowable weight.

If the material for a specific site has to be ordered in stages due to the construction staging, the payments will be made for the material ordered; and the final payment will be in conformance with the criteria mentioned above.

Prior to payment for the materials, the Contractor shall furnish to the Engineer a duly executed Certification of Title executed by the Contractor and the Vendor in the form approved by the Department and such materials shall become the property of the State. Such payment shall in no way release the Contractor from its responsibility for the condition, protection and, in case of loss, replacement of such materials, or from any liability resulting in any manner from the presence of such materials wherever they may be stored or kept.

If applicable, the contractor shall submit copies of actual invoices for transportation of mill stock material from the mill or warehouse to the Fabricator and for any testing of the material performed at the mill. These invoices shall include the same detail as the previously submitted price quotes.

6.03.05 Basis of Payment: The furnishing of the raw steel material for the plates and shape material only, based on the net weight (mass) required, excluding any markup, will be paid for under the estimated item “Materials for Structural Steel.” In addition, payment for transportation of mill stock material from the mill or warehouse to the Fabricator and any required testing of material performed at the mill will be paid under the item “Material for Structural Steel.” All remaining work including, but not limited to preparation of shop drawings, fabrication, transportation, storage and handling, erection, surface preparation, painting, galvanizing, shop operation, and all materials, equipment, tools and labor incidental thereto, will be paid for under “Structural Steel.”

The dollar amount contained within the Bid Proposal is an estimated cost only, and actual payment will be based on the actual costs, including allowable waste described above, as approved by the Engineer.

Pay Item	Pay Unit

Materials for Structural Steel (Site No. 1) Est.

ITEM #0603372A– MATERIALS FOR STRUCTURAL STEEL (SITE NO. 2)

6.03.01 Description: There will be no actual contract work under these contract items. These items are to be utilized to pay for the material cost of structural steel (plates and shapes) for the bridge at Site No. 2, to ensure that the payment for these materials reflects the current market price at the time that the order for these materials is actually placed.

Tabulated data for the structures are listed in the following table. The values provided are estimates only and are not guaranteed to be accurate. Bidders shall examine the listed structures and shall make their own determinations as to the work involved and conditions to be encountered.

Table 1 – ESTIMATED WEIGHTS, LENGTHS AND MISCELLANEOUS DATA:

Site No.	Bridge No.	No. of Spans**	Est. Weight of Struct. Steel* (cwt)	Length of Bridge** (feet)
2	03955R	1	2820	32

* Estimated values include Allowable overruns or waste.
** Span lengths are based on center to center of bearings.

The Bid Proposal form contains an estimated cost for the materials. These costs are not to be altered on the bid proposal, but are to be carried forward with the Contractor's bid prices. The Contractor is to ensure that the cost of structural steel raw plates and shapes required for the bridge is not included in the item "Structural Steel." Only the raw material costs, excluding any mark-up are to be paid for under this item. All other costs, including but not limited to preparation of shop drawings, handling, fabrication, transportation of fabricated shapes, storage, erection, surface preparation, painting, galvanizing, shop operation, and all materials, equipment, tools and labor incidental thereto, is to be paid for under the item "Structural Steel."

At least two weeks prior to the scheduled date for award of the Contract, the Contractor shall submit notarized affidavit(s) which includes copies of the mill or warehouse price quotes that the Contractor has received for the structural steel raw plates and shapes material for each site. The affidavit(s) must include any quotes of the latest mill prices as well as any such warehouse

quotes for each type of structural steel raw plates and/or structural steel shapes material. Said submission shall also list the approximate net weight (mass) of each type of structural steel raw plates and or structural steel shapes material required. These pre-award price quote affidavits shall establish the original price for each type of structural steel raw plates and shapes material for each site.

This provision does not relieve the responsibility of the Contractor for ordering the steel in a timely manner so as not to delay the performance of the Contract work.

6.03.02 Materials: The materials being paid for under this item shall conform to Section 6.03 of these Contract documents.

6.03.03 Construction Methods: N/A

6.03.04 Method of Measurement: When Shop Drawings for "Structural Steel (Site No.)" are submitted, they must be accompanied by a bill of raw materials which describes the raw plate and shapes stock necessary for the bridge. The actual weight of the finished shapes shall be referred to as the Fabricated Weight. Only the weights for the actual steel framing, including stiffeners, connection plates and diaphragms are to be included in the Fabricated Weight calculations. Sole, masonry, and shim plates, bolts and pins, or welds, as well as all other miscellaneous steel are to be excluded from the Fabricated Weight. The amount of waste generated from the fabrication will also be calculated and included with the shop drawings. However, Payment for waste weight, referred to as Allowable Waste, will be limited to 10% of the Fabricated Weight for straight girders and 15% of the Fabricated Weight for curved girders for each site.

The Contractor is to submit these weight calculations with the shop drawings and receive approval prior to payment for the materials. Failure to submit the Fabricated Weight calculations, waste calculations or a bill of raw materials will result in the rejection of the shop drawings.

Two (2) weeks before the date, on which the Contractor intends to order material, the Contractor shall submit the details of any such intended order to the Engineer. This submittal shall include the following;

1. A detailed description of the materials to be ordered cross referenced to the bill of raw materials for each site.
2. A notarized affidavit which includes copies of the latest mill or warehouse price quotes that the Contractor has received for any and all such items. It is intended that these quotes will be from multiple mills when applicable. If the Contractor chooses not to purchase materials from the lowest quoted source, the Contractor shall provide documentation to the Department describing the reasons for such decision

Upon purchase of materials, the contractor shall submit copies of the actual invoices with a notarized affidavit stating that the invoices are for materials purchased. The invoices shall include the same detail as the previously submitted price quotes.

The payment for material will be based on the actual invoice price as shown on the invoice received for materials purchased subject to the limits on the material waste noted above.

If the order weight exceeds the Allowable Weight (Fabricated Weight plus the Allowable Waste), and if a unit prices cannot be clearly identified, from the actual invoices, for the exceedance, the total value of the order(s) will be proportionately reduced in relation to the allowable weight.

If the material for a specific site has to be ordered in stages due to the construction staging, the payments will be made for the material ordered; and the final payment will be in conformance with the criteria mentioned above.

Prior to payment for the materials, the Contractor shall furnish to the Engineer a duly executed Certification of Title executed by the Contractor and the Vendor in the form approved by the Department and such materials shall become the property of the State. Such payment shall in no way release the Contractor from its responsibility for the condition, protection and, in case of loss, replacement of such materials, or from any liability resulting in any manner from the presence of such materials wherever they may be stored or kept.

If applicable, the contractor shall submit copies of actual invoices for transportation of mill stock material from the mill or warehouse to the Fabricator and for any testing of the material performed at the mill. These invoices shall include the same detail as the previously submitted price quotes.

6.03.05 Basis of Payment: The furnishing of the raw steel material for the plates and shape material only, based on the net weight (mass) required, excluding any markup, will be paid for under the estimated item “Materials for Structural Steel.” In addition, payment for transportation of mill stock material from the mill or warehouse to the Fabricator and any required testing of material performed at the mill will be paid under the item “Material for Structural Steel.” All remaining work including, but not limited to preparation of shop drawings, fabrication, transportation, storage and handling, erection, surface preparation, painting, galvanizing, shop operation, and all materials, equipment, tools and labor incidental thereto, will be paid for under “Structural Steel.”

The dollar amount contained within the Bid Proposal is an estimated cost only, and actual payment will be based on the actual costs, including allowable waste described above, as approved by the Engineer.

Pay Item	**Pay Unit**
Materials for Structural Steel	Est.

ITEM #0603881A – TEMPORARY SUPPORT SYSTEM (SITE NO. 1)

06.03.01 Description: The work shall consist of installing, maintaining, relocating, and removing a temporary shoring system to provide temporary support for the existing superstructure at Site No. 1, as indicated on the Contract Documents.

06.03.02 Materials: Used materials, in good condition, may be used to construct the shoring system.

06.03.03 Construction Methods: The temporary support system shall be installed to support the superstructure (concrete encased beams) which supports MNR tracks 1, 2 and 3. The temporary support system shall be installed and relocated as required to perform the staged construction under tracks 1, 2 and 3, as indicated on the Contract Documents. The temporary support system must be installed prior to placing the track back into service during the respective phase of construction.

The purpose of the temporary support system is to support the existing superstructure (concrete encased beams) under tracks 1, 2 and 3, after adjacent beams are removed. The temporary support system shall be designed to support all train loads (E80 Loading) on the superstructure during construction, including the superstructure self- weight. The shoring system shall be installed "snug tight" and not exert excessive upward pressure on the superstructure. The shoring system shall remain in tight contact with the superstructure at all times. The shoring system shall be monitored by the Contractor periodically and adjusted as necessary.

The temporary support system shall remain in place until the superstructure is scheduled for removal.

The shoring scheme depicted on the plans is for illustrative purposes only. The design of the actual shoring system shall be the responsibility of the Contractor, subject to approval by the Engineer. The Contractor shall engage the services of a State of Connecticut Licensed Professional Engineer to design and detail the temporary shoring system. The Contractor’s Engineer shall be available for consultation in interpreting his plans and in the resolution of problems that may arise during the performance of the work.

The Contractor shall furnish working drawings, prepared, stamped and signed by a State of Connecticut Licensed Professional Engineer, for the system proposed.

The drawings shall include, but need not be limited to the following:

1. Supporting member locations and respective phases of construction.
2. Calculated support loads.
3. Details for all support systems.
4. Type and grade of all materials.

Eight legible, standard sized (22 inch x 34 inch nominal) prints of each drawing, together with eight copies of all design computations shall be submitted to the Engineer for approval. Failure to submit drawings of the required size will be cause for their return without examination.

The Engineer shall be allowed the longest of the following time durations to examine design computations and working drawings:

- Fifteen working days
- Two working days for each drawing of a set of working drawings
- One working day for every four (4) design computation sheets. Any design computation sheet written on both sides will be considered as two design computation sheets.

All time for examination shall begin upon receipt of all pertinent information by the Engineer.

The Engineer's comments shall be indicated on the returned copies. Should the proposed system not be approved, the reasons shall be indicated with the return of the material. The Contractor shall then resubmit revised drawings for approval, subject to the same terms as the first submission. Resubmission shall not be considered a legitimate reason to request an extension of time.

All work shall be done in accordance with the approved working drawings. The Contractor must have approved working drawings prior to the start of any shoring operations.

All materials required for temporary support of the structure shall remain the property of the Contractor and shall be removed from the site after the work is completed, unless otherwise agreed to.

06.03.04 Method of Measurement: Payment for the temporary shoring system will be made on a lump sum basis.

06.03.05 Basis of Payment: The lump sum price bid shall include the cost of all materials, equipment, tools, and labor incidental thereto, necessary to complete this work for all locations where shoring is required.

Pay Item	Pay Unit
Temporary Support System (Site No. 1)	L.S.

ITEM #0661106A – SAFETY WALK

9.14.01 Description: This item shall consist of furnishing and installing fiberglass grating, metal handrailing mounted on structural steel framing, anchored to the steel fascia girder, including structural steel shapes, anchor bolts, hardware, fasteners fully galvanized in accordance with the dimensioned details given, and erected where shown on the plans in accordance with these specifications.

9.14.02 Materials: The materials for this work shall conform to the requirements of Article M.06.

Steel for fabrication shall be in conformance with ASTM A 36.

High strength bolts shall conform to ASTM A325, Type 1. Nuts shall conform to either ASTM A 563, Grade DH or ASTM A 194, Grade 2H. Flat hardened washers shall conform to ASTM F 436. Bolts, nuts and washers shall be galvanized in conformance with ASTM B695, Class 50.

The anchorage system shall conform to the details shown on the plans. Anchor bolts and washers shall be stainless steel conforming to ASTM A193, GradeB6 and ASTM A194, Grade 6, respectively.

Fiberglass grating shall be a Fiberglass reinforced Pultruded Fiberglass Grating System and shall possess the following material properties:

a. Corrosion Resistant
b. Elecrically Non-Conductive
c. Impact Resistant
d. Low Thermal Conductivity

Fiberglass grating shall be capable of withstanding a minimum uniform load of 150 lbs. per sq. ft. and a minimum concentrated load of 300 lbs with a maximum deflection of 3/8 inch.

Fiberglass grating shall have a gritted skid resistant top. Grit shall be embedded in the resin layer. Glue on grit shall not be acceptable. Fiberglass grating shall be 1.5 inch thick grating with standard panel sizes 3 feet wide minimum. Color shall be permanent and part of the molded grating. Color shall be a safety yellow or as directed by the Engineer. All hardware used to fasten grating shall be of similar corrosion resistance and shall be designed to avoid the creation of tripping hazards.

Fiberglass reinforced Grating shall be as manufactured by the following, or approved equal for specified application:

"McNichols – MS I-6015 1-1/2" Pultruded I-Bar Grating", McNichols Co., Tampa FL
"Century Composites - Pultruded Fiberglass Grating", Century Composites LLC, Tyrone, GA

9.14.03 Construction Methods: Fabricate, galvanize and install all items as shown on the plans and approved shop drawings.

All welding procedures shall conform to the current standards of the AWS. Care shall be taken to minimize distortion due to heat. Metal shall not be galvanized before welding.
Installation of fiberglass reinforced grating shall be per manufacturers requirements. A minimum of 8 fasteners shall be used on a 3 foot by 10 foot panel. Small pieces of grating shall be fastened with no fewer than four fasteners.

The Contractor shall be responsible for scheduling the delivery of all items so as to minimize on-site storage time prior to installation. All stored materials and items shall be protected from weather, careless handling and vandalism.

Shop Drawings: Before fabricating any materials, the Contractor shall submit shop drawings to the Engineer for approval, in accordance with article 1.05.02 (b). These drawings shall include, but not be limited to, the following information: the layout plan showing all safety wall steel, fiberglass reinforced grating, railing post spacing, all railing post base plate grades, expansion joint locations, dimensions, all details, material lists and material designations.

9.14.04 Methods of Measurements: This work will be measured for payment by the number of square feet of completed and accepted "Safety Walk" measured from outside of end posts.

9.14.05 Basis of Payment: This work will be paid for at the contract unit price per square feet for a "Safety Walk" complete in place, which price shall include all material, equipment, tools and labor incidental thereto.

Pay Item	Pay Unit
Safety Walk	S.F.

ITEM #0707013A – RAILROAD DECK WATERPROOFING

7.07.01 – Description: This work shall consist of furnishing and installing an acrylic-based, cold spray applied seamless, elastomeric waterproofing system on the top surface and sides of the deck before the installation of ballast mat as shown on the plans, in conformance with either of the two systems described herein.

7.07.02 – Materials: Delete this article and add the following:

The products and materials for this work shall conform to the following requirements:

A. The primer shall be a 100% reactive, acrylic-based, spray applied resin capable of a full cure in 40 minutes at 68° F (20° C) and equal to Stirling Lloyd Products, Inc. PAR1 for use on concrete.

B. The elastomeric waterproofing membrane shall meet the following requirements:

1. The membrane shall be 100% reactive, acrylic-based, two-component, spray applied material, and equal to Stirling Lloyd Products, Inc. ELIMINATOR.

2. The membrane shall meet or exceed the following properties as related to laboratory prepared samples tested at 68° F (20° C) and 24-hour cure where applicable.

Property	**Test Method**	**Units**
Gel Time	Stirling Lloyd 001	6-11 minutes
Cure Time	Stirling Lloyd 001	30 minutes
Water Vapor Transmission	ASTM E96-80	6.6 g/m^2/day
Adhesion to Concrete	ASTM D4541	100 psi (0.7 MPa) or failure in concrete
Adhesion to Steel	ASTM D4541	290 psi (2.0 MPa)
Minimum Tensile Strength	ASTM D638, Method A, Die C	940 psi (6.4 N/mm^2)
Minimum Elongation at Break	ASTM D638, Method A, Die C	80%
Low Temperature Flexibility	CAN CGSB 37.50 M89	Pass ¼" (6 mm) made at –13° F (-25° C)
Crack Bridging	ASTM C836-89a	Pass @ 25 cycles, 0.0625 in. (1.59 mm), -15° F (-26° C)
Ballast Impact	SNCF Test Method	No damage

3. The cured membrane shall be capable of carrying the direct load of a Cooper E-80 vehicle load distributed over a 7" deep layer of ballast, without the need for any protective cover.

C. Related materials determined in consultation with the Manufacturer on the basis of feasibility of application and recommended preparation.

7.07.03 – Construction Methods: Delete this article and add the following:

Construction methods and procedures shall conform to the following requirements:

A. SUBMITTALS:
The following material shall be submitted prior to any waterproofing installation.

1. The latest edition of the Manufacturer's literature including performance data and installation procedures, In accordance with Article 1.06.07 (Certified Test Reports and Materials Certificates).

2. List of references for similar projects completed during the last five years. In accordance with Article 1.06.07 (Certified Test Reports and Materials Certificates).

3. An 8 in. (200 mm) square sample of the proposed membrane; Color, texture, and thickness shall be representative of overall appearance, In accordance with Article 1.06.02 (Samples and Test).

B. QUALITY ASSURANCE:

1. The Manufacturer shall have a minimum of 10 years experience in the production, sales, and technical support of waterproofing membranes and related materials.

2. Proposed suppliers of "or equal" products shall be required to meet all provisions of this specification as well as provide evidence for compatibility between components to the satisfaction of the Engineer.

3. The Applicator shall be fully licensed by the Manufacturer.

4. A Certificate of Conformance shall be issued by the Manufacturer with each delivery of materials to the site.

5. The materials shall be manufactured by or equal to:

Stirling Lloyd Products, Inc.
152 Rockwell Road
Building A
Newington, CT 06111

Phone: 860-666-5008; Fax: 860-666-5106

C. WARRANTY: The Manufacture shall warrant the materials used on the project as evidenced by the Certificate of Conformance. Liability shall be limited to replacement of materials used.

D. SYSTEM DESCRIPTION:

1. A nominal 120 mils (3.0 mm) acrylic-based, cold liquid-applied, elastomeric waterproofing membrane to provide protection against corrosion of concrete or steel. Protection board shall not be required, as the membrane shall withstand the direct loading of ballast.

2. The system shall be applied to the prepared area(s) as defined in the plans strictly in accordance with the Manufacturer's recommendations.

E. SEQUENCING AND SCHEDULING: The Contractor and Engineer shall agree upon a schedule for coordinating activities in the area, which is to receive the system.

F. DELIVERY, STORAGE AND HANDLING:

1. All components of the system shall be delivered to the site in the Manufacturer's packaging, clearly identified with the product type and batch number.

2. The Applicator shall be provided with a storage area for all components. The area shall be cool, dry, out of direct sunlight and in accordance with the Manufacturer's recommendations and relevant health and safety regulations.

3. Copies of Material Safety Data Sheets (MSDS) for all components shall be kept on site for review by the Engineer or other personnel.

G. PROJECT CONDITIONS:

1. Application can proceed while air and substrate temperature is between 32° F (0° C) and 104° F (40° C) providing the substrate is above the dew point. Outside of this range, the Manufacturer shall be consulted.

2. The Applicator shall be provided with adequate disposal facilities for non-hazardous waste generated during installation of the system.

3. All open flames and spark-producing equipment shall be removed from the work area prior to commencement of application.

4. "No-Smoking" signs shall be posted at the entrances to the work area.

5. Non-related personnel in the work area shall be kept to a minimum.

H. INSPECTION:

1. Prior to the priming of the surface the Engineer and the Applicator shall inspect and approve the prepared substrate.

   a. Random tests for adequate tensile strength shall be conducted on the substrate by the Applicator at the job site using an Elcometer Adhesion Tester Model 106 or similar at a minimum frequency per 5,000 ft^2 ($500m^2$). Smaller areas shall receive a minimum of three tests.

   b. Adequate surface preparation will be indicated by tensile bond strengths of primer to the substrate greater than or equal to 100 psi (0.7 MPa) for concrete decks.

   c. Should the tensile bond strengths be lower than the minimum specified, the Engineer may request additional substrate preparation.

   d. Cracks and joints shall be treated in accordance with the Manufacturer's recommendations as approved or directed by the Engineer.

I. APPLICATION: The system shall be applied in three distinct steps as listed below:

   * Substrate Preparation
   * Priming
   * Membrane Application

1. Where the area to be treated is bound by a vertical surface (e.g., curb or wall), the system may be continued up the vertical as necessary using the appropriate grade of membrane as agreed with by the Manufacturer.

2. The handling, mixing and addition of components shall be performed in a safe manner to achieve the desired results in accordance with the Manufacturer's recommendations as approved or directed by the Engineer.

3. A neat finish with well-defined boundaries and straight edges shall be provided by the Applicator.

4. Surface Preparation:

   a. Concrete surfaces shall be free of oil, grease, curing compounds, loose particles, moss, algae, rust, growth, friable matter, dirt, bituminous products and previous waterproofing materials. If required, degreasing shall be performed via detergent washing in accordance with ASTM D4258.

b. There shall be no visible moisture present on the surface at the time of the application of the System. Compressed oil-free air and/or a light passing of a propane torch may be used to dry the substrate.

c. Removal of contaminants and surface preparation shall be performed by means approved by the Engineer to an agreed standard.

d. Within four hours of cleaning, all detritus shall be removed from the substrate and the primer coat applied.

e. The surface shall be abrasively cleaned, in accordance with ASTM D4259, to provide substrate free from laitance.

f. The substrate shall be sounded and all spalls repaired prior to placement of primer coat. Spalls shall be repaired with rapid-cure concrete patch materials as per the Engineer's and the Manufacturer's recommendations.

g. Voids and blow holes on vertical surfaces shall be repaired in the same manner.

h. The surface profile of the concrete is not to exceed ¼ inch peak-to-valley, and areas of minor surface deterioration of ½ inch and greater shall also be repaired to prevent excessive product usage. The extent and location of thin surface patches shall require the approval of the Engineer before the system is applied.

5. Primer

a. The primer shall consist of one coat with an overall coverage rate of 125-175 ft^2/gal (3.0 – 4.3 m^2/1).

b. All components shall be measured and mixed in accordance with the Manufacturer's recommendations.

c. The primer shall be spray-applied using a single component spray system approved for use by the Manufacturer. If required by site conditions, brush or roller application shall be allowed.

d. Porous concrete may require a second coat of primer should the first coat be absorbed.

e. The primer shall cure tack-free before application of the waterproofing membrane.

6. Membrane

a. The waterproofing membrane shall consist of two coats with a total film thickness of 60 mils (1.5 mm) per coat and a total of 120 mils (3.0 mm) to achieve an overall coverage rate of 13.4 ft^2/gal (0.33 m^2/l).

b. The membrane shall be comprised of two liquid Components A and B and a hardener powder which is to be added to Components B in accordance with the Manufacturer's recommendations.

c. If required by site conditions, the membrane shall be applied by brush, gauge rake or trowel.

d. The substrate shall be coated in a methodical manner. Checks for wet film thickness shall be carried out typically once every 100 ft^2 (9m^2).

e. The membrane shall cure tack-free before opening to service.

7. Repairs

a. If an area is left untreated or the membrane becomes damaged, a patch repair shall be carried out to restore the integrity of the System. The damaged area shall be cut back to sound material and wiped with solvent (e.g., acetone) up to a width of at least 4 in. (100 mm) on the periphery. The substrate shall be primed if necessary, followed by the application of membrane. A continuous layer shall be obtained over the substrate with a 4 in. (100 mm) overlap onto the existing membrane.

b. Where the membrane is to be joined to existing cured material and at day joints the new application shall overlap the existing one by at least 4 in. (100 mm). No preparation shall be necessary unless the existing materials are contaminated with dirt in which case the repair/overlap area shall first be wiped with solvent (e.g., acetone).

I. FIELD QUALITY CONTROL: The following sampling, tests, and inspections shall be conducted by the Applicator or Manufacturer's representative and recorded on a form to be submitted to the Engineer.

1. Air, substrate temperatures, and dew point. Dew point shall be calculated from temperature and humidity using standard tables.

2. Adhesion tests of the cured membrane shall be checked in accordance with Section H.1.a. above.

3. Wet film thickness shall be checked every 100 ft^2 (9 mm^2) using a gauge pin or standard comb type thickness gauge.

4. Coverage Rates for all layers shall be monitored by checking quantity of material used against the area covered.

5. When deemed necessary by the Engineer, samples shall be provided for each day's production or every 5,000 ft^2 (500 m^2), whichever is greater. Membrane samples shall be of a minimum size of 8 in (200 mm) square.

J. FINAL REVIEW: The Engineer and Applicator shall jointly review the area(s) in which the completed system has been installed. Any irregularities or other items, which do not meet the requirements of the Engineer, shall be addressed at this time.

7.07.04 Method of Measurement: This Work will be measured for payment by the number of square yards of membrane waterproofing completed and accepted within neat lines as shown on the plans. Metal sheeting, metal flashing, sealer, and any other materials necessary to make a complete and proper waterproofing system will not be measured and are considered incidental to this work.

7.07.05 Basis of Payment: This Work will be paid for at the Contract Unit Price per square yard for "Railroad Deck Waterproofing" complete in place, which price shall be full compensation for furnishing all material, including protective course, technical representatives, equipment, tools, labor and incidentals necessary to satisfactorily complete the Work.

Pay Item	Pay Unit
Railroad Deck Waterproofing	S.Y.

ITEM #0714045A – TEMPORARY SOLDIER PILE AND LAGGING (RAILROAD)

Work under this item shall conform to the requirements of Section 7.14, supplemented and amended as follows:

7.14.01-Description: Add the following:

The system(s) shall be designed for lateral earth pressure, piezometric forces, construction loads and Cooper E80 live loads as applicable.

It is required that temporary excavation support system(s) be properly designed soldier pile and lagging or alternative properly braced systems. Cantilevered steel sheet piling systems are not acceptable for railroad sheet piling applications.

The Contractor shall monitor the temporary excavation support system and the Railroad facilities being supported for movement in accordance with applicable monitoring items.

7.14.02-Materials: Add the following:

Steel- Steel soldier piles, walers and fabrications shall conform to the requirements of AASHTO M 183 (ASTM A 36) or AASHTO M 223 (ASTM A 572).

Lagging – Timber lagging shall be construction grade, rough cut and shall be a minimum of 3" thick, and shall conform to Specification for Structural Timber, Lumber and Piling, AASHTO M168. Where necessary, the Contractor shall provide certification that the timber conforms to the grade, species, and other specified requirements. If timber is to be treated with a preservative, a certificate of compliance shall be furnished.

Precast concrete lagging shall conform to Section 8.13 "Precast Concrete Members" of AASHTO "Standard Specifications for Highway Bridges." Concrete for the precast elements shall have a minimum 28-day compressive strength of 5000 psi.

7.14.03-Construction Methods: Add the following:

Installation of any tieback anchor system, soldier piles and other miscellaneous components of temporary excavation support systems shall not interfere with stage construction requirements or existing facilities.

The Contractor shall perform all work required for the design, installation, maintenance, and removal of temporary excavation support systems in a manner that satisfies the operational requirements of the railroad as noted in the Contract documents.

Construction staking shall be performed in accordance with applicable "Construction Staking" item.

7.14.04-Method of Measurement: Add the following:

No separate measurement will be made for maintenance (including replacement, if necessary) of the temporary excavation support systems if required to provide adequate support to the protected facilities.

7.14.05-Basis of Payment: Delete the first sentence of this section and replace with the following:

Payment for this work will be made at the contract unit price per square foot for "Temporary Soldier Pile and Lagging (Railroad)," measured as described in Section 7.14.04, as modified above. The unit price shall include all materials, tools, equipment, and labor incidental to the design, construction, maintenance and removal of the temporary excavation support systems required at the locations specified on the plans.

Monitoring of the rail facilities and the excavation support systems for movement during construction will be performed and paid under the applicable monitoring item.

Pay Item	Pay Unit
Temporary Soldier Pile and Lagging (Railroad)	S.F.

ITEM #0751821A – 6" STRUCTURE UNDERDRAIN

Work under this item shall conform to the requirements of Section 7.51, "Underdrain and Outlets", supplemented and amended as follows:

7.51.02 Materials: (1) Pipe: Supplement with the following:

Pipe shall be made from coated corrugated steel and conform to the requirements of Article M08.01.

7.51.05 Basis of Payment: This work shall be paid for at the contract unit price per linear foot for "6" Structure Underdrain" complete, accepted in place, which price shall include drains, supports, collectors and all materials, equipment, tools, and labor incidental thereto.

Pay Item	Pay Unit
6" Structure Underdrain	L.F.

ITEM #0811005A- CONCRETE WHEEL STOP

Concrete wheel stops shall be constructed in accordance with Section 8.11 - Concrete Curbing, supplemented as follows:

Article 8.11.01 -Description: Add the following:

Work under this item shall consist of furnishing and installing concrete wheel stops in the location given on the plans, or as ordered by the Engineer.

Article 8.11.02- Materials: Add the following:

Dowels for anchoring the wheel stop in place shall be ¾” x 36" long galvanized steel.

Article 8.11.03- Construction Methods: Add the following:
The concrete wheel stop shall be set in place on top of the pavement with both ends bearing evenly on the same. A steel dowel shall be driven into the underlying pavement through the hole at each end of the wheel stop. If necessary, a hole shall be pre-drilled in the pavement.

Article 8.11.03- Method of Measurement: Add the following:

This work shall be measured for payment per each concrete wheel stop furnished and installed complete.

Basis of Payment: Payment for this item will be at the contract unit price bid per each "Concrete Wheel Stop". Included in the cost of this work shall be all materials, labor and equipment necessary for the complete installation of the concrete wheel stop as shown on the plans, and described herein.

Pay Item	Pay Unit
Concrete Wheel Stop	Each

ITEM #0914001A – METAL HANDRAIL

Work under this item shall conform to the requirements of Section 9.14 amended and supplemented as follows:

9.14.01 Description: This item shall consist of furnishing and installing metal railing and handrailing mounted on the concrete stairs, retaining wall stairs, and platforms, including pipe railing, brackets, wall returns and anchorages, in accordance with the dimensioned details given, and erected where shown on the plans in accordance with these specifications.

9.14.02 Materials: Railings shall be constructed of 1 and ½ inch diameter aluminum pipe alloy 6063-T832, having a wall thickness of 0.145 inches, and manufactured with a clear anodized (204R1) finish. This coating shall be 0.018 millimeters or thicker, complying with AAMA 611.

Handrail components including mounting brackets, wall returns and anchorages shall be stainless steel, and shall be of the same strength as the railing material.

9.14.03 Construction Methods: Fabricate, and install all items as shown on the plans and approved shop drawings. The final installation of handrails shall meet the requirements of the Connecticut Building Code.

Railing shall be mounted to withstand 250 pounds of force.

Handrails shall be continuous on stairways, ramps or at other locations as required by the ADA. In addition, handrail ends shall be returned to floors or walls, thereby leaving no open ends.

All welding procedures shall conform to the current standards of the AWS. Care shall be taken to minimize distortion due to heat.

The Contractor shall be responsible for scheduling the delivery of all items so as to minimize on-site storage time prior to installation. All stored materials and items shall be protected from weather, careless handling and vandalism.

Shop Drawings: Before fabricating any materials, the Contractor shall submit shop drawings to the Engineer for approval, in accordance with article 1.05.02 (b). These drawings shall include, but not be limited to, the following information: the layout plan showing all railing bracket and anchorage spacing, dimensions, all details, material lists, material designations and Manufacturer's literature.

9.14.04 Methods of Measurements: This work will be measured for payment by the number of linear feet of completed and accepted "Metal Handrail" measured along the rail from end to end of wall returns.

9.14.05 Basis of Payment: This work will be paid for at the contract unit price per linear foot for a "Metal Handrail" complete in place, which price shall include all material, equipment, tools and labor incidental thereto.

Pay Item	Pay Unit
Metal Handrail	L.F.

ITEM #0914050A – REMOVE HANDRAIL

9.14.01 Description: Work under this item shall consist of the removal of the existing handrail and guardrail at the station platform, stairs, and locations shown on the plans or as directed by the Engineer. The handrail and guardrail and associated materials (posts, fasteners and caps) shall remain the property of the Contractor.

9.14.02 Materials: N/A

9.14.03 Construction Methods: The Contractor shall remove the existing handrail and guardrail and associated materials (posts, fasteners and caps) as indicated on the plans or as directed by the Engineer. The removed handrail and guardrail and associated materials shall be properly disposed of by the Contractor.

9.14.04 Method of Measurement: Remove Handrail shall be measured for payment by the number of linear feet of existing handrail and guardrail removed and disposed of complete and accepted (including associated materials).

9.14.05 Basis of Payment: This work shall be paid for at the contract unit price per linear foot for "Remove Handrail" complete, accepted in place, which price shall include the removal of associated materials, and all disposing, hauling and equipment, tools, and labor incidental thereto.

Pay Item	Pay Unit
Remove Handrail	L.F.

ITEM #0921001A - CONCRETE SIDEWALK

Concrete sidewalks shall be constructed in accordance with Article 9.21, supplemented as follows:

9.21.01 - Description: Add the following:

This item shall include furnishing and installing Detectable Warning Strips in the locations and to the dimensions and details shown on the plans or as directed by the Engineer.

9.21.02 – Materials: Add the following:

The Detectable Warning Strip, for new construction, shall be chosen from the Department's Qualified Products Lists. The tile shall conform to the dimensions shown on the plans Manufacturer's specifications and have a brick red homogeneous color throughout in compliance with Federal Standard 595A Color #22144 or approved equal.

9.21.03 – Construction Methods: Add the following:

The Detectable Warning Strip, for new construction, shall be set directly in poured concrete according to the plans and the Manufacturer's specifications and details. The flanges shall be embedded in wet concrete so that after the concrete is cured the surface of the detectable warning strip does not project above the adjacent concrete surface. The Contractor shall place two 25-pound concrete blocks or sandbags on each tile to prevent the tile from floating after installation.

The detectable warning strip shall be installed 6" from the edge of road along the full width of the ramp. The rows of truncated domes in a detectable warning surface shall then be aligned to be perpendicular or radial to the grade break between the ramp, landing, or blended transition and the street.

9.21.04 - Method of Measurement: Add the following:

The Detectable Warning strip will not be measured for payment. All materials, equipment, tools and labor incidental thereto shall be included in the Bid price for Concrete Sidewalk.

9.21.05 – Basis of Payment: This work shall be paid for a the contract unit price per square foot for "Concrete Sidewalk" complete, accepted in place, which price shall include all excavation, backfill, disposal of surplus material, gravel or reclaimed miscellaneous aggregate base, equipment, tools, materials and labor incidental thereto.

Pay Item	**Pay Unit**
Concrete Sidewalk	S.F.

ITEM #0947207A – BICYCLE RACK

Description: This item shall consist of furnishing and installing bicycle racks of the type specified, including concrete foundations, at the locations and to the dimensions and details shown on the plans or as directed by the Engineer.

Materials:

Bicycle racks shall be Model 2166, 9 bike, wave type as manufactured by Saris Cycling Group, 5253 Verona Rd., Madison, WI, 53711, telephone 800-783-7257, or approved equal. Construction shall be steel pipe.

Mounting shall be below grade. Concrete for foundations shall meet the requirements of Form 816, Section M.03.01.

Finish shall be factory applied polyester powder coat. Color to be determined by the Engineer.

Construction Methods: Bicycle racks shall be set plumb and installed securely in below grade foundations at the locations as shown on the plans. Concrete foundations shall be constructed in accordance with Form 816, Section 6.01.03.

Method of Measurement: Bicycle Racks will be measured as Each, installed and accepted in place.

Basis of Payment: Bicycle Racks will be paid for at the contract unit price Each, complete in place and accepted, which price shall include concrete foundations, equipment, tools, and labor incidental thereto.

ITEM #0969000A - PROJECT COORDINATOR

Section 1.05.08 of the Standard Specifications is hereby deleted and replaced with the following:

9.69.01 - Description: Under this item the Contractor shall furnish the services of an administrative employee, entitled the Project Coordinator, for this project to coordinate and expedite all phases of the work required for the project and to ensure that the construction schedule is maintained.

The minimum lump sum bid for this item shall be equal to 0.5% of the Contractor's total bid. Failure of the Contractor to bid at least the minimum amount will result in the Department adjusting the Contractor's bid to include the minimum bid amount for this item.

The Project Coordinator shall be submitted for approval by name, in writing, with a resume of his qualifications, within seven (7) calendar days of the award of the Contract, but not later than the Preconstruction Meeting, and shall not be changed without prior written notice to the Department.

This resume must demonstrate the Project Coordinator is experienced and versatile in the preparation, interpretation and modification of Critical Path Method (CPM) construction schedules. This must include successful completion of at least three (3) construction projects of similar complexity, where he served in a lead scheduling capacity. If the Contractor does not have a person in their company that has these skills, then the Contractor shall engage the services of a Consultant, subject to the approval of the Engineer, for the scheduling work required. If a Consultant is engaged, they shall be present at the first meeting, along with the Project Contractor, prepared to discuss, in detail, the methods and techniques he proposes to use. Thereafter, the Project Coordinator or the Consultant responsible for updating the CPM Schedule shall attend all meetings between the Contractor, its Subcontractors, and any other meetings, which will affect the CPM schedule. The Contractor shall prepare CPM Schedules utilizing the latest version of Primavera Project Planner software as described more fully hereinafter.

If the Contract includes Article 1.20 the following requirement shall also apply:

The Project Coordinator shall have, in addition to the above noted requirements, a minimum of eight (8) years' experience related to commercial/industrial building construction as a Project Coordinator performing duties similar to those required herein.

The Project Coordinator shall have knowledge of all trades involved in the construction, including civil/site work, environmental work, concrete work, masonry work, steel work, wood work, electrical work, and mechanical work.

Other combinations of experience and education totaling ten (10) years in commercial building construction will be considered subject to the approval of the Engineer.

9.69.02 - Materials:

Computer Software and Printer: The Contractor shall provide the following equipment with all the required maintenance and repairs (to include labor and parts) throughout the Contract life. The Engineer reserves the right to expand or relax the specification to adapt to the software and hardware limitations and availability.

The Contractor shall provide the Engineer with a licensed copy registered in the Department's name of the latest versions of the software listed and maintain customer support services offered by the software producer for the duration of the project. The Contractor shall deliver to the Engineer all supporting documentation for the software and hardware including any instructions or manuals.

A. Software – Minimum Specification: The Contractor shall provide the Engineer with a licensed copy of the latest version of the Primavera Contractor – Deluxe Version scheduling software, registered in the Department's name, and maintain the Primavera customer support service contract over the duration of the project.

B. HP Officejet Pro K8600 Color Printer – Minimum or equivalent (to be installed as a local printer on a computer provided under the Construction Field Office specification):

Paper – 11 in x17 in, 8.5 in x 11 in and duplex/double-side print
Resolution – 1200x1200 DPI
Print Drivers – Must support HP PCL6.
RAM – 32 MB RAM
Print speed – 10 ppm – color, 13 ppm - black
Printer cable – 6 ft (1.8 m)

The Contractor is responsible for service and repairs to all computer hardware. All repairs must be performed within 24 hours. If the repairs require more than a 24 hours then a replacement must be provided.

9.69.03 - Construction Methods: The Project Coordinator shall attend all meetings between the Contractor and the Department, the Contractor and its Subcontractors, and any other meetings that affect the progress of the job. The Project Coordinator shall be knowledgeable of the status of all parts of the work throughout the length of the Contract.

The Contractor shall prepare a CPM Schedule in accordance with the pertinent provisions of "Section 1.03 - Award and Execution of Contract," "Section 1.05 - Control of the Work," and "Section 1.08 - Prosecution of Progress" of the Standard Specifications. The schedule shall incorporate the Sequence of Construction as outlined on the Plans and in the Specifications. All other limiting factors that affect construction shall also be incorporated into the schedule. All milestones or constrained dates within the schedule shall be clearly indicated.

The CPM schedule shall contain a list of activities that represent the major elements of the project. At a minimum, this list should include a breakdown by individual structure or stage, including major components of each. The schedule shall contain sufficient detail to describe the progression of the work in a comprehensive manner. As a guide, 10 to 15 activities should be provided for each $1 million of contract value.

The following list of items is provided as an example only and is not meant to be all-inclusive (or all-applicable):

General Items Applicable to all projects

Contractual Constraints including but not limited to

- Winter shutdowns
- Environmental permits/applications time of year restrictions
- Milestones
- Third Party approvals
- Long lead time items (procurement and fabrication of major elements)
- Adjacent Projects or work by others

Award
Notice to Proceed
Signing (Construction, temporary, permanent by location)
Mobilization
Permits as required
Field Office
Utility Relocations
Submittals/shop drawings/working drawings/product data
Clearing and Grubbing
Earthwork (Borrow, earth excavation, rock excavation, etc.)
Traffic control items (including illumination and signalization)
Pavement markings
Roadway Construction (Breakdown into components)
Drainage (Breakdown into components)
Final Plantings (including turf establishment)
Final Cleanup

The following additional guidelines supplement the general guidelines listed above for the specific project types indicated:

A. For bridges and other structures, include major components such as:

Installation of Foundations for High Level Platforms
Installation of High Level Platforms
Modifications to Existing High Level Platforms
Installation of Bridge Plates
Removal and Replacement of Chain Link Fence
Rail Facility Upgrade

Reconstruction of Stairways
Reconstruction of Abutment Backwalls and Bridge Seats
Modifications to Existing Abutment Stem and Wingwalls
Installation of Temporary Support Structures for Existing Superstructure
Installation of Temporary Support for Existing Track Structure
Removal and Replacement of Superstructure
Installation of Bridge Bearings
Installation of New Track Structure at Bridge Location(s)
Construction of Retaining Wall and Parapet in South Parking Lot
Modifications/Improvements to South Parking Lot
Roadway Improvements
Landscaping

B. Facility Projects shall reflect the same breakdown of the project as the schedule of values:

CSI Division 5 – Metals
CSI Division 7 – Thermal and Moisture Protection
CSI Division 8 – Openings
CSI Division 9 – Finishes
CSI Division 10 – Specialties
CSI Division 12 – Furnishings
CSI Division 26 – Electrical
CSI Division 27 – Communications

The CPM schedule will be compiled using this list of major activities. It will be the responsibility of the contractor to detail all milestones, environmental permit "window" periods; winter shutdowns etc. and include them on their schedule under the corresponding dates.

Proper relationship between all major activities shall be indicated. Node numbers shall be coded such that the major activities shown on the Critical Path Schedule shall be easily referenced to the Detailed Project Schedule when it is developed. Break down the work covered under each Special Provision, or Division and Section of Article 1.20 of the Standard Specifications, into individual activities required and logically group related activities together within the CPM.

If the Engineer determines that additional detail is necessary, the Contractor shall provide it.

All documents, which require approval by the Department, shall be clearly identified within the schedule. The Department and any outside agency shall be allocated a minimum number of calendar days in accordance with Article 1.20-1.05.02. If Article 1.20 does not apply, then the Department shall be allocated a minimum of thirty (30) calendar days (exclusive of weekends and holidays) for review and approval of each submittal. Any submittals requiring approval by an outside Agency (ConnDEEP, Coast Guard, Army Corps of Engineers, etc.) shall be allocated a minimum of sixty (60) calendar days. The Department shall not be held responsible for any

delay associated with the approval or rejection of any substitution or other revisions proposed by the Contractor.

The schedule shall indicate the logic of the work for the major elements and components of work under the Contract, such as the planned mobilization of plant and equipment, sequences of operations, procurement of materials and equipment, duration of activities, type of relationship, lag time (if any), and such other information as it is necessary to present a clear statement of the intended activities.

The Contractor is responsible to inform its subcontractor(s) and supplier(s) of the project schedule and any relevant updates.

The schedules shall consist of a network technique of planning, scheduling and control, shall be a clear statement of the logical sequence of work to be done, and shall be prepared in such a manner that the Contractor's work sequence shall be optimized between early start and late start restraints. The Contractor shall use the same criteria in a consistent manner throughout the term of the project. If, at any time, the Contractor alters logic, original durations, and descriptions, adds activities or activity codes or in any way modifies the Baseline Schedule, they must notify the Engineer of the change, in writing, presenting in detail the reasons for the change. The Engineer reserves the right to approve or reject any such change.

The critical path of the project must be identified on the CPM schedule. The critical path is the longest-duration path through the network. The significance of the critical path is that the activities that lie on it cannot be delayed without delaying the project. Because of its impact on the entire project, critical path analysis is an important aspect of project planning.

The critical path can be identified by determining the following four parameters for each activity:

- ES - earliest start time: the earliest time at which the activity can start given that its precedent activities must be completed first.
- EF - earliest finish time, equal to the earliest start time for the activity plus the time required to complete the activity.
- LF - latest finish time: the latest time at which the activity can be completed without delaying the project.
- LS - latest start time, equal to the latest finish time minus the time required to complete the activity.

The *float time* for an activity is the time between its earliest and latest start time, or between its earliest and latest finish time. Float is the amount of time that an activity can be delayed past its earliest start or earliest finish without delaying the project. Delays to activities on the critical path through the project network in which no float exists, that is, where ES=LS and EF=LF will delay the project.

Float available in the schedule, at any time shall not be considered for the exclusive use of either the State or the Contractor. During the course of contract execution, any float generated due to the efficiencies of either party is not for the sole use of the party generating the float; rather it is a shared commodity to be reasonably used by either party. Project float will be a resource available to both the State and the Contractor.

Each CPM Schedule submittal shall be in the form of an activity on node diagram (precedence diagramming method) and shall include at a minimum; an Early Start computer sort, a Total Float computer sort, an Activity Number computer sort, a Schedule Diagram in the Time Scaled Logic format and a backup data CD-ROM which includes all Primavera project files. The diagrams shall be on 2' x 3' sheets. Additional, more detailed diagrams for important aspects or phases of the work will be required on large or complex projects.

Activity I.D. numbers shall be keyed to the item numbers assigned on the detailed estimate sheet. The first three digits (four digits for highway illumination, signing, traffic signals and utility work) of the activity I.D. number shall be identical to the first three digits of the item number in the contract. The remaining digits may be used to provide unique, orderly and sequential I.D. numbers for each activity.

Activity codes shall be added to the schedule dictionary at the direction of the Engineer. At a minimum, activity codes for responsibility (prime, subcontractor by name), location of work (bridge #, span #, sta. #, site, building, type of work, etc.) and stage or phase number should be included.

The Project Coordinator shall be required to prepare and submit the following documents:

1. <u>Baseline Submittal Requirements:</u> The Contractor shall be guided by the following requirements when submitting the CPM Schedules for review and approval.

   a. Within ten (10) calendar days after award, the Contractor and their scheduler will attend a meeting to discuss the submittal requirements. Within twenty (20) calendar days after contract award, the Contractor shall prepare and submit for review and approval a detailed CPM Schedule for all work. The review and approval process may take up to 21 calendar days and is more fully described in paragraph (b) of this section.

      The work shall be broken out into sufficient detail such that no activity has a duration greater than twenty (20) days, unless approved by the Engineer. As a guide, 25 to 35 activities should be provided per $1 million of contract work. The Engineer shall be the sole judge as to whether the schedule is sufficiently detailed.

      All work shall be shown in sufficient detail such that the Critical Path may be identified and the schedule shall incorporate all contract milestones. Upon approval, this schedule shall be designated the "Baseline".

Failure to submit and gain approval for the "Baseline" may result in the Contractor being found in violation of Article 1.02.02 of the Standard Specifications. All elapsed contract time prior to the approval of the “Baseline”, will be considered to be accurately represented by the actual as-built schedule of that time period. No claims for delays during that period will be allowed.

The approval of a Baseline Schedule shall in no way waive the requirements of the contract nor shall it excuse the Contractor from any obligations under the contract.

In no instance will the Contractor be permitted to commence work on any significant portion of the work for which a Baseline Schedule has not been approved without prior written approval from the Department.

b. The Contractor, represented by the Project Coordinator and/or the Consultant, shall participate with the Engineer in the review and evaluation of each schedule submitted. Any and all revisions made necessary as a result of this review shall be made by the Contractor and a revised schedule submitted within ten (10) calendar days. Any further revisions required thereafter shall also be submitted for approval within (10) calendar days.

2. Monthly Updates: Each month, as of a calendar date mutually acceptable to the Contractor and to the Engineer, the Contractor shall deliver to the Engineer three (3) prints of all required schedule diagrams and tabulations. In addition, the Contractor shall deliver one (1) copy of the project backup data CD-ROM(s), which includes all Primavera project files. The schedule shall be updated to show the work actually accomplished during the preceding months, the actual time consumed for each activity, and the estimated time remaining for any activity which as been started but not completed.

The monthly update shall also include revisions to the CPM schedule necessitated by revisions to the project, which have been directed by the Engineer (including, but not limited to extra work) during the month preceding the update. Similarly, any changes to the schedule due to Contractor influences shall also be included within the schedule.

Any changes or revisions made to the approved Baseline shall be identified in narrative form in a cover letter accompanying the monthly update. The Engineer reserves the right to approve or reject any such changes. The narrative shall also describe in general terms the progress of the work since the last schedule update and shall identify any items of special interest. If the schedule revisions extend the Contract completion date, due to extra or added work or delays beyond the control of the Contractor, the Contractor must submit a request in writing for an extension of time in accordance with Article 1.08.08. This request should be supported by the schedules submitted previously.

The Contractor shall be responsible to develop mitigation measures for all delays, regardless of responsibility, and to identify all time and cost impacts to the work associated with those mitigation measures.

Except as otherwise authorized by the Engineer, monthly submissions received after the due date are considered late.

The reports required for each monthly update shall include all reports generated for approval of the CPM Schedule for that particular portion of the work. On larger or complex projects, the Engineer may require the schedule data sorted by an activity code to better reflect the progression of the work. Summary barcharts may also be required.

3. Biweekly Schedules: Each week, the Contractor shall be required to produce and submit to the Engineer a biweekly schedule showing all activities planned for the following two week period. This short term schedule may be handwritten; however a two week “look ahead” filter from the CPM Schedule is preferred. The biweekly schedule shall clearly indicate all work planned on a crew basis for the two week period.

4. Recovery Schedules: If, in the opinion of the Engineer, the updated schedule indicates that the Project has fallen behind schedule, or that a revision in sequence of operations may be necessary for any other reason, absent a justifiable time extension, the Contractor shall immediately institute all necessary steps to improve the Project’s progress and shall submit such revised network diagrams, tabulations and operational plans, as may be deemed necessary by the Engineer, to demonstrate the manner in which an acceptable rate of progress will be regained.

   Should the Contractor not demonstrate an ability to regain an acceptable rate of progress, the Engineer shall require the schedule to be resource loaded with the next monthly update. No additional compensation will be allowed for resource loading the schedule.

5. As-Built Schedules: Within thirty (30) days of completion of the project, including all corrective work, the Contractor shall submit an "As-Built Schedule" showing the actual progress of work. The Contractor shall submit three prints of this final CPM Schedule and one project backup data CD-ROM which include all Primavera project files for the Engineer's exclusive use.

   If the contract includes Article 1.20 the following shall also apply:

6. Daily Construction Reports: The Project Coordinator shall assist the Engineer in the preparation of a daily construction report by ensuring that each of the Contractor’s employees and subcontractors working on the Project Site on a given day signs the Engineer’s sign-in sheet for that day; and by keeping and providing to the Engineer its own daily list of employees and subcontractors who worked on the Project Site on that day.

9.69.04 - Method of Measurement: Within ten (10) calendar days of the award of the Contract, the Contractor shall submit to the Engineer for approval a breakdown of its lump sum bid price for this item detailing:

1. The development cost to prepare the Baseline Schedule in accordance with these specifications. Development costs shall not exceed 25% of the total cost of the item and shall include costs to furnish and install all specified hardware.

2. The cost to provide the services of the Project Coordinator, including costs to prepare and submit the Monthly Updates; furnish and submit any Recovery Schedules; furnish and submit Two Week Look Ahead Schedules and maintenance of and supplies for the specified hardware noted above. A per month cost will be derived by taking this cost divided by the number of Contract months remaining from the date of acceptance of the Baseline Schedule.

3. The cost of submission and certification of the As-Built Schedule in accordance with these specifications. The submission and certification costs shall be no less than 2% of the total cost of the item.
4. Substantiation showing that the costs submitted are reasonable based on the Contractor's lump sum bid.

Upon approval of the payment schedule by the Engineer, payments for work performed will be made as follows:

1. Upon approval of the "Baseline" Schedule by the Engineer, the lump sum development cost will be certified for payment.

2. Upon receipt of each monthly update of the "Baseline" Schedule, the per month cost for the services of the Project Coordinator will be certified for payment.

3. Upon approval of the As-Built Schedule by the Engineer, the lump sum submission and certification cost will be certified for payment.

9.69.05 - Basis of Payment: This service will be paid for at the contract lump sum price for "Project Coordinator" complete, which price shall include the preparation and submission of all schedules, updates, reports and submittals. The lump sum price shall also include the cost of providing a complete, licensed copy of the Primavera software which will remain the property of the Engineer, and all materials, equipment, labor and work incidental of this service.

The lump sum price will be certified for payment as described in "Method of Measurement" subject to the following conditions:

1. Any month where the monthly update of the "Baseline" CPM schedule is submitted late, without authorization from the Engineer, will result in the following actions:

    a. The monthly payment for the Project Coordinator item shall be deferred to the next monthly payment estimate. If any monthly submittal is more than thirty (30) calendar days late, there will be no monthly payment for the services of the Project Coordinator.

b. The greater of 5% of the monthly payment estimate or $25,000 shall be retained from the monthly payment estimate until such time as the Contractor submits all required reports.

c. If in the opinion of the Engineer, the contractor is not in compliance with this specification, the Engineer may withhold all project payments.

2. In the event the project extends beyond the original completion date by more than thirty (30) calendar days, and a time extension is granted to the Contractor, the Department may require additional CPM updates which will be paid at the per month cost for the services of the Project Coordinator.

3. If, in the opinion of the Engineer, the contractor is not in compliance with this specification or has failed to submit a "Baseline", monthly update or Recovery Schedule for any portion of the work in accordance with this specification, it shall result in the withholding of all contract payments until the schedule is submitted to, and approved by, the Engineer.

Pay Item	**Pay Unit**
Project Coordinator	L.S.

ITEM #0969064A - CONSTRUCTION FIELD OFFICE, LARGE

9.69.01 - Description: Under the item included in the bid document, adequate weatherproof office quarters will be provided by the Contractor for the duration of the work, and if required, for a maximum of ninety days thereafter for the exclusive use of ConnDOT forces and others who may be engaged to augment ConnDOT forces with relation to the contract. The office quarters shall be located convenient to the work site and installed in accordance with Article 1.08.02, this office shall be separated from any office occupied by the Contractor. Ownership and liability of the office quarters shall remain with the Contractor.

9.69.02 - Materials: Materials shall be in like new condition for the purpose intended and shall be approved by the Engineer.

Office Requirements: The Contractor shall furnish the office quarters and equipment as described below.

	Description:
1,000 SF	Sq. Ft. of floor space with a minimum ceiling height of 7 ft. and shall be partitioned as shown on building floor plan as provided by the Engineer.
2 EA	Minimum number of exterior entrances.
10 EA	Minimum number of parking spaces.

Office layout: The office shall have a minimum square footage as indicated in the table above, and shall be partitioned as shown on building floor plan as provided by the Engineer. The underside of the office shall be fully skirted to the ground.

Lavatory Facilities: The Contractor shall furnish a minimum of two (2) separate lavatories and toilet facilities ("men" and "women"), in separately enclosed rooms that are properly ventilated and comply with applicable sanitary codes. The Contractor shall provide each lavatory with hot and cold running water and flush-type toilets. He shall also supply lavatory and sanitary supplies as required.

Windows and Entrances: The windows shall be of a type that will open and close conveniently, shall be sufficient in number and size to provide adequate light and ventilation, and shall be fitted with locking devices, blinds and screens. The entrances shall be secure, screened, and fitted with a lock for which four keys shall be furnished. All keys to the construction field office shall be furnished to the Department and will be kept in their possession while State personnel are using the office. Any access to the entrance ways shall meet applicable building codes and be slip resistant, with appropriate handrails.

Lighting: The Contractor shall equip the office interior with electric lighting that provides a minimum illumination level of 100 foot-candles at desk level height, and electric outlets for each desk and drafting table. The Contractor shall also provide exterior lighting that provides a minimum illumination level of 2 foot-candles throughout the parking area and for a minimum distance of 10 ft. on each side of the field office.

The Contractor shall provide the following additional equipment, facilities, and/or services at the Field Office on this project to include at least the following to the satisfaction of the Engineer:

Parking Facility: Adequate parking spaces with adequate illumination on a paved surface, with surface drainage if needed. If paved parking does not exist adjacent to the field office, the Contractor shall provide a parking area of sufficient size to accommodate the number of vehicles indicated in the table above. Construction of the parking area and driveway, if necessary, will consist of a minimum of 6 inches of processed aggregate base graded to drain. The base material will be extended to the office entrance.

Field Office Security: Physical Barrier Devices - This shall consist of physical means to prevent entry, such as: 1) All windows shall be barred or security screens installed; 2) All field office doors shall be equipped with dead bolt locks and regular day operated door locks; and 3) Other devices as directed by the Engineer to suit existing conditions.

Electric Service: The field office shall be equipped with an electric service panel to serve the electrical requirements of the field office, including: lighting, general outlets, computer outlets, calculators etc., and meet the following minimum specifications:

A. 120/240 volt, 1 phase, 3 wire.
B. Ampacity necessary to serve all equipment. Service shall be a minimum 100 amp dedicated to the construction field office.
C. The electrical panel shall include a main circuit breaker and branch circuit breakers of the size and quantity required.
D. Additional 120 volt, single phase, 20 amp, isolated ground dedicated power circuit with dual NEMA 5-20 receptacles will be installed at each computer workstation location.
E. Additional 120 volt, single phase, 20 amp, isolated ground dedicated power circuit with dual NEMA 5-20 receptacles will be installed, for use by the Telephone Company.
F. Additional 120-volt circuits and duplex outlets as required meeting National Electric Code requirements.
G. One exterior (outside) wall mounted GFI receptacle, duplex, isolated ground, 120 volt, straight blade.
H. After work is complete and prior to energizing, the State's ConnDOT electrical inspector, must be contacted at 860-594-2240. (Do Not Call Local Town Officials)
I. Prior to field office removal the ConnDOT Data Communications office must be notified to deactivate the communications equipment.

Heating, Ventilation and Air Conditioning (HVAC): The field office shall be equipped with sufficient heating, air conditioning and ventilation equipment to maintain a temperature range of 68°-80° Fahrenheit within the field office.

The Following Furnishings and Equipment Shall Be Provided In The Applicable Field Office Type:

Qty	Description:
5 EA	Office desks (2.5 ft x 5 ft) with drawers, locks, and matching desk chairs that have

Qty	Description:
	pneumatic seat height adjustment and dual wheel casters on the base.
4 EA	Office Chairs.
2 EA	Fire resistant cabinets (legal size/4 drawer), locking.
2 EA	Non-fire resistant cabinets (legal size/4 drawer), locking.
1 EA	Storage racks to hold 3 ft x 5 ft display charts.
1 EA	Mail slot bin - legal size.
1 EA	Drafting type tables (3 ft x 6 ft) and supported by wall brackets and legs; and matching drafters stool that have pneumatic seat height adjustment, seat back and dual wheel casters on the base.
1 EA	Flat file (4/drawers).
3 EA	Personal computer tables (4 ft x 2.5 ft).
1 EA	Hot and cold water dispensing unit and supply of cups and bottled water shall be supplied by the Contractor for the duration of the project.
2 EA	Electronic office type printing calculators capable of addition, subtraction, multiplication and division with memory and a supply of printing paper.
4 EA	Telephone.
1 EA	Telephone answering machine.
1 EA	Plain paper facsimile (FAX) machine capable of transmitting via telephone credit card. All supplies, paper and maintenance shall be provided by the Contractor.
1 EA	Copier/Scanner - dry, plain paper with automatic feeder and reducing capability. All supplies, paper and maintenance shall be provided by the Contractor.
4 EA	Computer systems as specified below under Computer Hardware and Software. All supplies and maintenance shall be provided by the Contractor.
1 EA	Laser printer as specified below under Computer Hardware and Software. All supplies, paper and maintenance shall be provided by the Contractor.
3 EA	Digital Camera as specified below under Computer Hardware and Software. All supplies and maintenance shall be provided by the Contractor.
1 EA	Wastebaskets - 30 gal., including plastic waste bags.
6 EA	Wastebaskets - 5 gal., including plastic waste bags.
2 EA	Electric pencil sharpeners.
* EA	Fire extinguishers - provide and install type and number to meet applicable State and local codes for size of office indicated, including a fire extinguisher suitable for use on a computer terminal fire.
6 EA	Interior partitions - 6 ft x 6 ft, soundproof type, portable and freestanding.
2 EA	Vertical plan racks for 2 sets of 2 ft x 3 ft plans for each rack..
1 EA	Double door supply cabinet with 4 shelves and a lock - 6 ft x 4 ft.
1 EA	Easel/chalkboard.
2 EA	Open bookcases - 3 shelves - 3 ft long.
1 EA	Infrared Thermometer, including certified calibration, case, cleaning wipes.
1 EA	Concrete Curing Box as specified below under Concrete Testing Equipment.
1 EA	Concrete Air Meter as specified below under Concrete Testing Equipment.
1 EA	Concrete Slump Cone as specified below under Concrete Testing Equipment.

The furnishings and equipment required herein shall remain the property of the Contractor. Any supplies required to maintain or operate the above listed equipment or furnishings shall be provided by the Contractor for the duration of the project.

Telephone Service: This shall consist of two (2) telephone lines: one (1) line for phone/voice service and one (1) line dedicated for the facsimile machine. The Contractor shall pay all charges except for out-of-state toll calls made by State personnel.

Data Communications Facility Wiring: Contractor shall install a Category 5e 468B patch panel in a central wiring location and Cat 5e cable from the patch panel to each PC station, terminating in a (category 5e 468B) wall or surface mount data jack. The central wiring location shall also house either the data circuit with appropriate power requirements or a category 5 cable run to the location of the installed data circuit. The central wiring location will be determined by the ConnDOT Data Center staff in coordination with the designated field office personnel as soon as the facility is in place. The ConnDOT Project Engineer will provide the Contractor with a copy of the current PC specifications, approved printer list and data wiring schematic as soon as possible after the contract is awarded.

Contractor to run a CAT 5e LAN cable a minimum length of 25 feet for each computer to LAN switch area leaving an additional 10 feet of cable length on each side with terminated RJ45 connectors. Each run / jack shall be clearly labeled with an identifying Jack Number.

The installation of a data communication circuit between the field office and the ConnDOT Data Communication Center in Newington will be coordinated between the ConnDOT District staff, ConnDOT Office of Information Systems and the local phone company. The ConnDOT District staff will coordinate the installation of the data communication service with ConnDOT PC Support once the field office phone number is issued. The Contractor shall provide the field office telephone number(s) to the ConnDOT Project Engineer as soon as possible to facilitate data line and computer installations.

Computer Hardware and Software:

The ConnDOT Project Engineer will provide the Contractor with a copy of the current PC specifications, approved printer list and data wiring schematic as soon as possible after the contract is awarded.

Before ordering the computer hardware and software, the Contractor shall submit a copy of their proposed PC specifications and the type of printer to the ConnDOT Project Engineer for review by the ConnDOT Data Center. If the specification meets or exceeds the minimum specifications listed below, then the Contractor will be notified that the order may be placed.

Before any equipment is delivered to the Data Center, arrangements must be made a minimum of 24 hours in advance by contacting 860-594-3500. All software, hardware and licenses listed below shall be clearly labeled, specifying the (1) Project No., (2) Contractor Name, (3) Project Engineer's Name and (4) Project Engineer's Phone No., and shall be delivered

to the ConnDOT Data Center, 2710 Berlin Turnpike, Newington, CT, where it will be configured and prepared for field installation. Installation will then be coordinated with ConnDOT field personnel and the computer system specified will be stationed in the Department's project field office.

The computer system furnished shall have all software and hardware necessary for the complete installation of the latest versions of the software listed, and therefore supplements the minimum specifications below. The Engineer reserves the right to expand or relax the specification to adapt to the software and hardware limitations and availability, the compatibility with current agency systems, and to provide the Department with a computer system that can handle the needs of the project. **There will not be any price adjustment due to the change in the minimum system requirements.**

The Contractor shall provide the Engineer with a licensed copy registered in the Department's name of the latest versions of the software listed and maintain customer support services offered by each software producer for the duration of the Contract. The Contractor shall deliver to the Engineer all supporting documentation for the software and hardware including any instructions or manuals. The Contractor shall provide original backup media for the software.

The Contractor shall provide the computer system with all required supplies, maintenance and repairs (including labor and parts) throughout the Contract life.

Once the Contract has been completed, the computer will remain the property of the Contractor. Prior to the return of any computer(s) to the Contractor, field personnel will coordinate with the Data Center personnel for the removal of Department owned equipment, software, data, and associated equipment.

A) Computer – Minimum Specification:

Processor – Intel® Core i3 Processor (2.93 GHz, 1066 MHz FSB 3MB L2 Cache)
Memory – 4 GB DIMM DDR3 1333MHz.
Dual Monitor – 24.0 inch LCD color monitor.
Graphics – Intel Graphics Media Accelerator 4500 or equivalent.
Hard Drive – 500 GB Ultra ATA/SATA hard drive (Western Digital, IBM or Seagate).
Optical Drive – CD-RW/DVD-RW Combo.
Multi-Card Reader – Must include SD
Multimedia Package – Integrated Sound Blaster Compatible AC97 Sound and speakers.
Case – Small Form or Mid Tower, capable of vertical or horizontal orientation.
Integrated Network Adapter – comparable to 3COM 10/100/1000 twisted pair Ethernet.
Keyboard – 104+ Keyboard.
Mouse – Optical 2-button mouse with scroll wheel.
Operating System – Windows 7 Professional.
Application Software – MS Office Professional Edition 2010.
Additional Software (Latest Releases, including subscription services for the life of the Contract) –

- Norton Anti-Virus,
- Adobe Acrobat Professional

Resource or Driver CD/DVD – CD/DVD with all drivers and resource information so the computer can be restored to original prior to shipment back to the contractor.
Uninterrupted power supply – APC Back-UPS 500VA.

Note A1: All hardware components must be installed before delivery. All software documentation and CD-ROMs/DVD for Microsoft Windows 7 Professional, Microsoft Office 2010 Professional Edition, and other software required software must be provided. Computer Brands are limited to Dell (preferred) and HP (acceptable) brands only. No other brands will be accepted. The ConnDOT Project Engineer will provide the Contractor with a copy of the current PC specifications and approved printer list as soon as possible after the contract is awarded.

B) Laptop Computer – Minimum Specification:

Only Dell or HP brand laptop computers will be accepted
Processor – Intel® Core i5 Processor (2.50 GHz, 1333 MHz FSB, 3M Cache)
Memory – 4 GB DIMM DDR3 1333MHz.
Screen – 14.0 inch LED anti-glare.
Graphics – Intel Graphics Media Accelerator 3000. or equivalent.
Hard Drive – 250 GB 7200 rpm hard drive (Western Digital, IBM or Seagate).
USB ports – Four (4).
Optical Drive – CD-RW/DVD-RW Combo.
Multimedia Package – Integrated microphone and speakers.
Integrated Network Adapter – comparable to 3COM PCI 10/100/1000 twisted pair Ethernet.
Wireless Network Adapter – Intel® Centrino a/b/g/n.
Internal GOBI Modem capable of 3G/4G connection – Modem only (must be installed in addition to Wireless Network Adapter). The Department will be responsible for furnishing data service for the device.
Card Reader – multi-card reader including SD.
Battery – Two (2) 9-cell batteries: 1-primary and 1-spare.
Power adapters – One (1) AC wall adapter and One (1) 12 Volt DC Auto adapter.
Mouse – Cordless laser 2-button mouse with scroll wheel.
Operating System – Windows 7 Professional 64-Bit Service Pack 1.
Application Software – MS Office 2010 Professional Edition.
Additional Software (Latest Releases, including subscription services for the life of the Contract.–

- Norton Anti-Virus,
- Adobe Acrobat Professional

Resource or Driver CD/DVD – CD/DVD with all drivers and resource information so that computer can be restored to original prior to shipment back to the contractor.
Carrying Case – Carrying case sized to carry laptop and accessories.

Note B1: All hardware components must be installed before delivery. All software documentation and CD-ROMs/DVD for Microsoft Windows 7 Professional, Microsoft Office 2010 Professional Edition, and other software required software must be provided. Computer Brands are limited to Dell (preferred) and HP (acceptable) brands only. No other brands will be accepted. The ConnDOT Project Engineer will provide the Contractor with a copy of the current PC specifications and approved printer list as soon as possible after the contract is awarded.

C) Laser Printer – Minimum Specification:

Print speed – 20 ppm.
Resolution – 1,200 x 1,200 dpi.
Paper size – Up to 216 mm x 355 mm (8.5 in x 14 in).
RAM – 16 MB.
Print Drivers – Must support HP PCL6 and HP PCL5e.
Printer cable – 1.8 m (6 ft).

Note C1: Laser printer brands are limited to Hewlett-Packard and Savin brands only. The ConnDOT Project Engineer will provide the Contractor with a copy of the current PC specifications and approved printer list as soon as possible after the contract is awarded.

Note C2: For 'Small', 'Medium' and 'Large' Field Officers, it is acceptable to substitute a multi-function all-in-one printer/copier/scanner/fax machine listed on the approved printer list in place of the required laser printer and fax machine.

Note C3: For Type 'Extra-Large' Field Offices it is acceptable to substitute (1) a high-speed multi-function all-in-one printer/copier/scanner/fax machines listed on the approved printer list in place of one required laser printer and fax machine, and (2) a multi-function all-in-one printer/copier/scanner/fax machine listed on the approved printer list in place of the second required laser printer and fax machine. Only one of these devices is required to be set-up to function as the one required fax machine.

D) Scanner: Refer to C) Laser Printer Minimum Specification Note C2 and C3.

E) Digital Camera – Minimum Specification:

Optical – 5 mega pixel, with 3x optical zoom.
Memory – 4 GB.
Connectivity – USB cable or memory card reader.
Software – Must be compatible with Windows 7 Professional.
Power – Rechargeable battery and charger.

The Contractor is responsible for service and repairs to all computer and communications hardware. All repairs must be performed with-in 48 hours. If the repairs require more than a 48

hours then a replacement must be provided. All supplies, paper and maintenance for the computers, laptops, printers, copiers, and fax machines shall be provided by the Contractor.

Current Approved Printers

The following list of printers includes the only printers that will be **approved** for use in the Field Offices, the Terminal Servers with SiteManager system. If you currently have a construction project that is scheduled to start please ensure that the contractor only supplies one of these printers. No other printers will be approved or supported for new construction projects.

NOTE: Network interface requirements for all printing/scanning/copying devices:

- All printers/multifunction devices **shall be Network ready** (MIN 10/100 RJ45)
- Network/OS – Windows XP/Windows 7/Server 2008R2
- Network Protocols - TCP/IP (IPv4, IPv6)
- All printers/multifunction devices shall have a built in **display window**.
- Wireless/ePrinting are **not** allowed **nor** supported.

NOTE: All printing/scanning/copying devices shall have a built in display window.

HP LASER JET ACCEPTABLE MODELS;

- HP LaserJet Pro series
- HP LaserJet Professional series
- HP LaserJet Enterprise series

With the ***exception*** of the following models:

- ***No*** *HP Laser Pro 1…. Series (Not compatible w/ our network)*
- ***No*** *HP Laser Jet 1…. Series (Not compatible w/ our network)*
- ***No*** *HP Laser Jet P2035 (Not compatible w/ our network)*
- ***No HP Laser Jet P2015 (Not compatible w/ our network)***
- ***No*** *HP Laser Jet Color 2550N(Not compatible w/ our network)*
- ***No*** *HP Laser Jet P1…. Series (Not compatible w/ our network)*
- ***No*** *HP laser Jet CM…. Series (Not compatible w/ our network)*
- ***No*** *HP laser Jet CP10… Series (Not compatible w/ our network)*
- ***No*** *HP laser Jet MFP Series (Not compatible w/ our network)*
- ***No*** *HP laser Jet Multifunction Series (Not compatible w/ our network)*

SAVIN MULTIFUNCTION printer/copy/fax/scanner models;

NB: The only supported scanning method is via a Savin Multifunction

- SAVIN B&W Multifunction 9…. series
- SAVIN B&W Multifunction MP…. series
- SAVIN Color Multifunction C… series
- SAVIN Color Multifunction MP…. series

Concrete Testing Equipment: If the Contract includes items that require compressive strength cylinders for concrete, in accordance with the Schedule of Minimum Testing Requirements for Sampling Materials for Test, the Contractor shall provide the following. All testing equipment will remain the property of the Contractor at the completion of the project.

A) Concrete Cylinder Curing Box – meeting the requirements of Section 6.12 of the Standard Specifications.

B) Air Meter – The air meter provided shall be in good working order and will meet the requirements of AASHTO T 152.

C) Slump Cone Mold – Slump cone, base plate, and tamping rod shall be provided in like-new condition and meet the requirements of AASHTO T119, Standard Test Method for Slump of Hydraulic-Cement Concrete.

Insurance Policy: The Contractor shall provide a separate insurance policy, with no deductible, in the minimum amount of forty thousand dollars ($40,000.00) in order to insure all State-owned data equipment and supplies used in the office against all losses. The Contractor shall be named insured on that policy, and the Department shall be an additional named insured on the policy. These losses shall include, but not be limited to: theft, fire, and physical damage. The Department will be responsible for all maintenance costs of Department owned computer hardware. In the event of loss, the Contractor shall provide replacement equipment in accordance with current Department equipment specifications, within seven days of notice of the loss. If the Contractor is unable to provide the required replacement equipment within seven days, the Department may provide replacement equipment and deduct the cost of the equipment from monies due or which may become due the Contractor under the contract or under any other contract. The Contractor's financial liability under this paragraph shall be limited to the amount of the insurance coverage required by this paragraph. If the cost of equipment replacement required by this paragraph should exceed the required amount of the insurance coverage, the Department will reimburse the Contractor for replacement costs exceeding the amount of the required coverage.

Maintenance: During the occupancy by the Department, the Contractor shall maintain all facilities and furnishings provided under the above requirements, and shall maintain and keep the office quarters clean through the use of weekly professional cleaning to include, but not limited to, washing & waxing floors, cleaning restrooms, removal of trash, etc. Exterior areas shall be mowed and clean of debris. A trash receptacle (dumpster) with weekly pickup (trash removal) shall be provided. Snow removal, sanding and salting of all parking, walkway, and entrance ways areas shall be accomplished during a storm if on a workday during work hours, immediately after a storm and prior to the start of a workday. If snow removal, salting and sanding are not completed by the specified time, the State will provide the service and all costs incurred will be deducted from the next payment estimate.

9.69.03 - Construction Methods: N/A

9.69.04 - Method of Measurement: The furnishing and maintenance of the construction field office will be measured for payment by the number of calendar months that the office is in place and in operation, measured to the nearest month.

There will not be any price adjustment due to any change in the minimum computer system requirements.

9.69.05 - Basis of Payment: The furnishing and maintenance of the construction field office will be paid at the listed unit price per month for the respective item "Construction Field Office, Large", which price shall include all material, equipment, labor, utility services and work incidental thereto.

The cost of providing the parking area, external illumination, trash removal and snow and ice removal shall be included in the monthly unit price bid for the respective item "Construction Field Office, Large".

The State will be responsible for payment of data communication user fees and for toll calls by State personnel.

Pay Item	Pay Unit
Construction Field Office, Large	Month

ITEM #0970006A - TRAFFICPERSON (MUNICIPAL POLICE OFFICER)
ITEM #0970007A - TRAFFICPERSON (UNIFORMED FLAGGER)

9.70.01—Description: Under this item the Contractor shall provide the services of Trafficpersons of the type and number, and for such periods, as the Engineer approves for the control and direction of vehicular traffic and pedestrians. Traffic persons requested solely for the contractor's operational needs will not be approved for payment.

9.70.03—Construction Method: Prior to the start of operations on the project requiring the use of Trafficpersons, a meeting will be held with the Contractor, Trafficperson agency or firm, Engineer, and State Police, if applicable, to review the Trafficperson operations, lines of responsibility, and operating guidelines which will be used on the project. A copy of the municipality's billing rates for Municipal Police Officers and vehicles, if applicable, will be provided to the Engineer prior to start of work.

On a weekly basis, the Contractor shall inform the Engineer of their scheduled operations for the following week and the number of Trafficpersons requested. The Engineer shall review this schedule and approve the type and number of Trafficpersons required. In the event of an unplanned, emergency, or short term operation, the Engineer may approve the temporary use of properly clothed persons for traffic control until such time as an authorized Trafficperson may be obtained. In no case shall this temporary use exceed 8 hours for any particular operation.

If the Contractor changes or cancels any scheduled operations without prior notice of same as required by the agency providing the Trafficpersons, and such that Trafficperson services are no longer required, the Contractor will be responsible for payment at no cost to the Department of any show-up cost for any Trafficperson not used because of the change. Exceptions, as approved by the Engineer, may be granted for adverse weather conditions and unforeseeable causes beyond the control and without the fault or negligence of the Contractor.

Trafficpersons assigned to a work site are to only take direction from the Engineer.

Trafficpersons shall wear a high visibility safety garment that complies with OSHA, MUTCD, ASTM Standards and the safety garment shall have the words "Traffic Control" clearly visible on the front and rear panels (minimum letter size 2 inches (50 millimeters). Worn/faded safety garments that are no longer highly visible shall not be used. The Engineer shall direct the replacement of any worn/faded garment at no cost to the State.

A Trafficperson shall assist in implementing the traffic control specified in the Maintenance and Protection of Traffic contained elsewhere in these specifications or as directed by the Engineer. Any situation requiring a Trafficperson to operate in a manner contrary to the Maintenance and Protection of Traffic specification shall be authorized in writing by the Engineer.

Trafficpersons shall consist of the following types:

1. Uniformed Law Enforcement Personnel: Law enforcement personnel shall wear the high visibility safety garment provided by their law enforcement agency. If no high visibility safety garment is provided, the Contractor shall provide the law enforcement personnel with a garment meeting the requirements stated for the Uniformed Flaggers' garment.

Law Enforcement Personnel may be also be used to conduct motor vehicle enforcement operations in and around work areas as directed and approved by the Engineer.

Municipal Police Officers: Uniformed Municipal Police Officers shall be sworn Municipal Police Officers or Uniformed Constables who perform criminal law enforcement duties from the Municipality in which the project is located. Their services will also include an official Municipal Police vehicle when requested by the Engineer. Uniformed Municipal Police Officers will be used on non-limited access highways. If Uniformed Municipal Police Officers are unavailable, other Trafficpersons may be used when authorized in writing by the Engineer.
Uniformed Municipal Police Officers and requested Municipal Police vehicles will be used at such locations and for such periods as the Engineer deems necessary to control traffic operations and promote increased safety to motorists through the construction sites.

2. Uniformed Flagger: Uniformed Flaggers shall be persons who have successfully completed flagger training by the American Traffic Safety Services Association (ATSA), National Safety Council (NSC) or other programs approved by the Engineer. A copy of the Flagger's training certificate shall be provided to the Engineer before the Flagger performs any work on the project. Uniformed Flaggers shall conform to Chapter 6E, Flagger Control, in the Manual of Uniformed Traffic Control Devices (MUTCD) and shall wear high-visibility safety apparel, use a STOP/SLOW paddle that is at least 18 inches (450 millimeters) in width with letters at least 6 inches (150 millimeters) high. The paddle shall be mounted on a pole of sufficient length to be 6 feet (1.8 meters) above the ground as measured from the bottom of the sign.

Uniformed Flaggers will only be used on non-limited access highways to control traffic operations when authorized in writing by the Engineer.

9.70.04—Method of Measurement: Services of Trafficpersons will be measured for payment by the actual number of hours for each person rendering services approved by the Engineer. These services shall include, however, only such trafficpersons as are employed within the limits of construction, project right of way of the project or along detours authorized by the Engineer to assist the motoring public through the construction work zone. Services for continued use of a detour or bypass beyond the limitations approved by the Engineer, for movement of construction vehicles and equipment, or at locations where traffic is unnecessarily restricted by the Contractor's method of operation, will not be measured for payment.

Trafficpersons shall not work more than twelve hours in any one 24 hour period. In case such services are required for more than twelve hours, additional Trafficpersons shall be furnished and measured for payment. In cases where the Trafficperson is an employee on the Contractor's payroll, payment under the item "Trafficperson (Uniformed Flagger)" will be made only for those hours when the Contractor's employee is performing Trafficperson services.

Travel time will not be measured for payment for services provided by Uniformed Municipal Police Officers or Uniformed Flaggers.

Mileage fees associated with Trafficperson services will not be measured for payment.

Safety garments and STOP/SLOW paddles will not be measured for payment.

9.70.05—Basis of Payment: Trafficpersons will be paid in accordance with the schedule described herein.
There will be no direct payment for safety garments or STOP/SLOW paddles. All costs associated with furnishing safety garments and STOP/SLOW paddles shall be considered included in the general cost of the item.

1. Uniformed Law Enforcement Personnel: The sum of money shown on the Estimate and in the itemized proposal as "Estimated Cost" for this work will be considered the bid price even though payment will be made as described below. The estimated cost figure is not to be altered in any manner by the bidder. Should the bidder alter the amount shown, the altered figures will be disregarded and the original price will be used to determine the total amount for the contract.

The Department will pay the Contractor its actual costs for "Trafficperson (Municipal Police Officer)" plus an additional 5% as reimbursement for the Contractor's administrative expense in connection with the services provided.

The invoice must include a breakdown of each officer's actual hours of work and actual rate applied. Mileage fees associated with Trafficperson services are not reimbursable expenses and are not to be included in the billing invoice. The use of a municipal police vehicle authorized by the Engineer will be paid at the actual rate charged by the municipality. Upon receipt of the invoice from the municipality, the Contractor shall forward a copy to the Engineer. The invoice will be reviewed and approved by the Engineer prior to any payments. *Eighty (80%) of the invoice will be paid upon completion of review and approval. The balance (20%) will be paid upon receipt of cancelled check or receipted invoice, as proof of payment.* The rate charged by the municipality for use of a uniformed municipal police officer and/or a municipal police vehicle shall not be greater than the rate it normally charges others for similar services.

2. Uniformed Flagger: Uniformed flaggers will be paid for at the contract unit price per hour for "Trafficperson (Uniformed Flagger)", which price shall include all compensation, insurance benefits and any other cost or liability incidental to the furnishing of the trafficpersons ordered.

Pay Item	Pay Unit
Trafficperson (Municipal Police Officer)	EST.
Trafficperson (Uniformed Flagger)	HR.

ITEM #0971001A – MAINTENANCE AND PROTECTION OF TRAFFIC

Article 9.71.01 – Description is supplemented by the following:

The Contractor shall maintain and protect traffic as described by the following and as limited in the Special Provision "Prosecution and Progress":

SOUND BEACH AVENUE (SITE NO. 1)

The Contractor shall maintain and protect one lane of through traffic in each direction, and turning lanes, each lane on a paved travelpath not less than 11 feet in width.

Excepted therefrom will be those periods, during the allowable periods, when the Contractor is actively working at which time the Contractor will be allowed to maintain and protect at least an alternating one-way traffic operation on a paved travelpath not less than 12 feet in width.

During the allowable period, the Contractor will be allowed to close Sound Beach Avenue between Laddin Rock Road and West End Avenue to through traffic and detour traffic as shown on the Detour Plan contained herein.

Access and egress to all adjacent properties shall be maintained at all times.

A dedicated sidewalk shall be maintained and protected to allow for the safe passage of pedestrians during all construction phases with the following exception: when a roadway is closed to traffic and an approved detour is active, the Contractor may detour or otherwise restrict pedestrian traffic if required for safety or other reasons, as approved by the Engineer. If no appropriate detour is available the contractor will stop work and allow for the safe passage of pedestrians through the work area.

TOMAC AVENUE (SITE NO. 2)

The Contractor shall maintain and protect one lane of through traffic in each direction, and turning lanes, each lane on a paved travelpath not less than 11 feet in width.

Excepted there from will be those periods, during the allowable periods, when the Contractor is actively working at which time the Contractor will be allowed to maintain and protect at least an alternating one-way traffic operation on a paved travel path not less than 12 feet in width.

During the allowable period, the Contractor will be allowed to close Tomac Avenue between Forest Avenue and Lockwood Avenue to through traffic and detour traffic as shown on the Detour Plan contained herein.

Access and egress to all adjacent properties shall be maintained at all times.

A dedicated sidewalk shall be maintained and protected to allow for the safe passage of pedestrians during all construction phases with the following exception: when a roadway is closed to traffic and an approved detour is active, the Contractor may detour or otherwise restrict pedestrian traffic if required for safety or other reasons, as approved by the Engineer. If no appropriate detour is available the contractor will stop work and allow for the safe passage of pedestrians through the work area.

All Other Roadways

The Contractor shall maintain and protect a minimum of one lane of traffic in each direction, each lane on a paved travel path not less than 11 feet in width.

Excepted therefrom will be those periods, during the allowable periods, when the Contractor is actively working, at which time the Contractor shall maintain and protect at least an alternating one-way traffic operation, on a paved travel path not less than 11 feet in width. The length of the alternating one-way traffic operation shall not exceed 300 feet and there shall be no more than one alternating one-way traffic operation within the project limits without prior approval of the Engineer.

Commercial and Residential Driveways

The Contractor shall maintain access to and egress from all commercial and residential driveways throughout the project limits. The Contractor will be allowed to close said driveways to perform the required work during those periods when the businesses are closed, unless permission is granted from the business owner to close the driveway during business hours. If a temporary closure of a residential driveway is necessary, the Contractor shall coordinate with the owner to determine the time period of the closure.

Article 9.71.03 - Construction Method is supplemented as follows:

General

Unpaved travel paths will only be permitted for areas requiring full depth and full width reconstruction, in which case, the Contractor will be allowed to maintain traffic on processed aggregate for a duration not to exceed 10 calendar days. The unpaved section shall be the full width of the road and perpendicular to the travel lanes. Opposing traffic lane dividers shall be used as a centerline.

The Contractor is required to delineate any raised structures within the travel lanes, so that the structures are visible day and night, unless there are specific contract plans and provisions to temporarily lower these structures prior to the completion of work.

The Contractor shall schedule operations so that pavement removal and roadway resurfacing shall be completed full width across a roadway (bridge) section by the end of a workday (work night), or as directed by the Engineer.

When the installation of all intermediate courses of bituminous concrete pavement is completed for the entire roadway, the Contractor shall install the final course of bituminous concrete pavement.

When the Contractor is excavating adjacent to the roadway, the Contractor shall provide a 3-foot shoulder between the work area and travel lanes, with traffic drums spaced every 50 feet. At the end of the workday, if the vertical drop-off exceeds 3 inches, the Contractor shall provide a temporary traversable slope of 4:1 or flatter that is acceptable to the Engineer.

The Contractor, during the course of active construction work on overhead signs and structures, shall close the lanes directly below the work area for the entire length of time overhead work is being undertaken. At no time shall an overhead sign be left partially removed or installed.

If applicable, when an existing sign is removed, it shall be either relocated or replaced by a new sign during the same working day.

The Contractor shall not store any material on-site which would present a safety hazard to motorists or pedestrians (e.g. fixed object or obstruct sight lines).

The field installation of a signing pattern shall constitute interference with existing traffic operations and shall not be allowed, except during the allowable periods.

Construction vehicles entering travel lanes at speeds less than the posted speed are interfering with traffic, and shall not be allowed without a lane closure. The lane closure shall be of sufficient length to allow vehicles to enter or exit the work area at posted speeds, in order to merge with existing traffic.

Existing Signing

The Contractor shall maintain all existing overhead and side-mounted signs throughout the project limits during the duration of the project. The Contractor shall temporarily relocate signs and sign supports as many times as deemed necessary, and install temporary sign supports if necessary and as directed by the Engineer.

Requirements for Winter

The Contractor shall schedule a meeting with representatives from the Department including the offices of Maintenance and Traffic, and the Town/City to determine what interim traffic control measures the Contractor shall accomplish for the winter to provide safety to the motorists and permit adequate snow removal procedures. This meeting shall be held prior to October 31 of each year and will include, but not be limited to, discussion of the status and schedule of the

following items: lane and shoulder widths, pavement restoration, traffic signal work, pavement markings, and signing.

Signing Patterns

The Contractor shall erect and maintain all signing patterns in accordance with the traffic control plans contained herein. Proper distances between advance warning signs and proper taper lengths are mandatory.

Pavement Markings -Non-Limited Access Multilane Roadways
Secondary and Local Roadways
During construction, the Contractor shall maintain all pavement markings on paved surfaces on all roadways throughout the limits of the project.

Interim Pavement Markings
The Contractor shall install painted pavement markings, which shall include centerlines, shoulder edge lines, lane lines (broken lines), lane-use arrows, and stop bars, on each intermediate course of bituminous concrete pavement and on any milled surface by the end of the work day/night. If the next course of bituminous concrete pavement will be placed within seven days, shoulder edge lines are not required. The painted pavement markings will be paid under the appropriate items.

If the Contractor will install another course of bituminous concrete pavement within 24 hours, the Contractor may install Temporary Plastic Pavement Marking Tape in place of the painted pavement markings by the end of the work day/night. These temporary pavement markings shall include centerlines, lane lines (broken lines) and stop bars; shoulder edge lines are not required. Centerlines shall consist of two 4 inch wide yellow markings, 2 feet in length, side by side, 4 to 6 inches apart, at 40-foot intervals. No passing zones should be posted with signs in those areas where the final centerlines have not been established on two-way roadways. Stop bars may consist of two 6 inch wide white markings or three 4 inch wide white markings placed side by side. The Contractor shall remove and dispose of the Temporary Plastic Pavement Marking Tape when another course of bituminous concrete pavement is installed. The cost of furnishing, installing and removing the Temporary Plastic Pavement Marking Tape shall be at the Contractor's expense.

If an intermediate course of bituminous concrete pavement will be exposed throughout the winter, then Epoxy Resin Pavement Markings should be installed unless directed otherwise by the Engineer.

Final Pavement Markings
The Contractor should install painted pavement markings on the final course of bituminous concrete pavement by the end of the work day/night. If the painted pavement markings are not installed by the end of the work day/night, then Temporary Plastic Pavement Marking Tape shall be installed as described above and the painted pavement markings shall be installed by the end of the work day/night on Friday of that week.

If Temporary Plastic Pavement Marking Tape is installed, the Contractor shall remove and dispose of these markings when the painted pavement markings are installed. The cost of furnishing, installing and removing the Temporary Plastic Pavement Marking Tape shall be at the Contractor's expense.

The Contractor shall install permanent Epoxy Resin Pavement Markings in accordance with Section 12.10 entitled "Epoxy Resin Pavement Markings, Symbols, and Legends" after such time as determined by the Engineer.

TRAFFIC CONTROL DURING CONSTRUCTION OPERATIONS

The following guidelines shall assist field personnel in determining when and what type of traffic control patterns to use for various situations. These guidelines shall provide for the safe and efficient movement of traffic through work zones and enhance the safety of work forces in the work area.

TRAFFIC CONTROL PATTERNS

Traffic control patterns shall be used when a work operation requires that all or part of any vehicle or work area protrudes onto any part of a travel lane or shoulder. For each situation, the installation of traffic control devices shall be based on the following:

Speed and volume of traffic
Duration of operation
Exposure to hazards

Traffic control patterns shall be uniform, neat and orderly so as to command respect from the motorist.

In the case of a horizontal or vertical sight restriction in advance of the work area, the traffic control pattern shall be extended to provide adequate sight distance for approaching traffic.

If a lane reduction taper is required to shift traffic, the entire length of the taper should be installed on a tangent section of roadway so that the entire taper area can be seen by the motorist.

Any existing signs that are in conflict with the traffic control patterns shall be removed, covered, or turned so that they are not readable by oncoming traffic.

When installing a traffic control pattern, a Buffer Area should be provided and this area shall be free of equipment, workers, materials and parked vehicles.

Typical traffic control plans 19 through 25 may be used for moving operations such as line striping, pot hole patching, mowing, or sweeping when it is necessary for equipment to occupy a travel lane.

Traffic control patterns will not be required when vehicles are on an emergency patrol type activity or when a short duration stop is made and the equipment can be contained within the shoulder. Flashing lights and appropriate trafficperson shall be used when required.

Although each situation must be dealt with individually, conformity with the typical traffic control plans contained herein is required. In a situation not adequately covered by the typical traffic control plans, the Contractor must contact the Engineer for assistance prior to setting up a traffic control pattern.

PLACEMENT OF SIGNS

Signs must be placed in such a position to allow motorists the opportunity to reduce their speed prior to the work area. Signs shall be installed on the same side of the roadway as the work area. On multi-lane divided highways, advance warning signs shall be installed on both sides of the highway. On directional roadways (on-ramps, off-ramps, one-way roads), where the sight distance to signs is restricted, these signs should be installed on both sides of the roadway.

ALLOWABLE ADJUSTMENT OF SIGNS AND DEVICES SHOWN ON THE TRAFFIC CONTROL PLANS

The traffic control plans contained herein show the location and spacing of signs and devices under ideal conditions. Signs and devices should be installed as shown on these plans whenever possible.

The proper application of the traffic control plans and installation of traffic control devices depends on actual field conditions.

Adjustments to the traffic control plans shall be made only at the direction of the Engineer to improve the visibility of the signs and devices and to better control traffic operations. Adjustments to the traffic control plans shall be based on safety of work forces and motorists, abutting property requirements, driveways, side roads, and the vertical and horizontal curvature of the roadway.

The Engineer may require that the traffic control pattern be located significantly in advance of the work area to provide better sight line to the signing and safer traffic operations through the work zone.

Table I indicates the minimum taper length required for a lane closure based on the posted speed limit of the roadway. These taper lengths shall only be used when the recommended taper lengths shown on the traffic control plans cannot be achieved.

TABLE I – MINIMUM TAPER LENGTHS

POSTED SPEED LIMIT MILES PER HOUR	MINIMUM TAPER LENGTH IN FEET FOR A SINGLE LANE CLOSURE
30 OR LESS	180
35	250
40	320
45	540
50	600
55	660
65	780

SECTION 1. WORK ZONE SAFETY MEETINGS

1.a) Prior to the commencement of work, a work zone safety meeting will be conducted with representatives of DOT Construction, Connecticut State Police (Local Barracks), Municipal Police, the Contractor (Project Superintendent) and the Traffic Control Subcontractor (if different than the prime Contractor) to review the traffic operations, lines of responsibility, and operating guidelines which will be used on the project. Other work zone safety meetings during the course of the project should be scheduled as needed.

1.b) A Work Zone Safety Meeting Agenda shall be developed and used at the meeting to outline the anticipated traffic control issues during the construction of this project. Any issues that can't be resolved at these meetings will be brought to the attention of the District Engineer and the Office of Construction. The agenda should include:

- Review Project scope of work and time
- Review Section 1.08, Prosecution and Progress
- Review Section 9.70, Trafficpersons
- Review Section 9.71, Maintenance and Protection of Traffic
- Review Contractor's schedule and method of operations.
- Review areas of special concern: ramps, turning roadways, medians, lane drops, etc.
- Open discussion of work zone questions and issues
- Discussion of review and approval process for changes in contract requirements as they relate to work zone areas

SECTION 2. GENERAL

2.a) If the required minimum number of signs and equipment (i.e. one High Mounted Internally Illuminated Flashing Arrow for each lane closed, two TMAs, Changeable Message Sign, etc.) are not available; the traffic control pattern shall not be installed.

2.b) The Contractor shall have back-up equipment (TMAs, High Mounted Internally Illuminated Flashing Arrow, Changeable Message Sign, construction signs, cones/drums, etc.) available at all times in case of mechanical failures, etc. The only exception to this is in the case of sudden equipment breakdowns in which the pattern may be installed but the Contractor must provide replacement equipment within 24 hours.

2.c) Failure of the Contractor to have the required minimum number of signs, personnel and equipment, which results in the pattern not being installed, shall not be a reason for a time extension or claim for loss time.

2.d) In cases of legitimate differences of opinion between the Contractor and the Inspection staff, the Inspection staff shall err on the side of safety. The matter shall be brought to

the District Office for resolution immediately or, in the case of work after regular business hours, on the next business day.

SECTION 3. INSTALLING AND REMOVING TRAFFIC CONTROL PATTERNS

3.a) Lane Closures shall be installed beginning with the advanced warning signs and proceeding forward toward the work area.

3.b) Lane Closures shall be removed in the reverse order, beginning at the work area, or end of the traffic control pattern, and proceeding back toward the advanced warning signs.

3.c) Stopping traffic may be allowed:

- As per the contract for such activities as blasting, steel erection, etc.
- During paving, milling operations, etc. where, in the middle of the operation, it is necessary to flip the pattern to complete the operation on the other half of the roadway and traffic should not travel across the longitudinal joint or difference in roadway elevation.
- To move slow moving equipment across live traffic lanes into the work area.

3.d) Under certain situations when the safety of the traveling public and/or that of the workers may be compromised due to conditions such as traffic volume, speed, roadside obstructions, or sight line deficiencies, as determined by the Engineer and/or State Police, traffic may be briefly impeded while installing and/or removing the advanced warning signs and the first ten traffic cones/drums only. Appropriate measures shall be taken to safely slow traffic. If required, traffic slowing techniques may be used and shall include the use of Truck Mounted Impact Attenuators (TMAs) as appropriate, for a minimum of one mile in advance of the pattern starting point. Once the advanced warning signs and the first ten traffic cones/drums are installed/removed, the TMAs and sign crew shall continue to install/remove the pattern as described in Section 4c and traffic shall be allowed to resume their normal travel.

3.e) The Contractor must adhere to using the proper signs, placing the signs correctly, and ensuring the proper spacing of signs.

3.f) Additional devices are required on entrance ramps, exit ramps, and intersecting roads to warn and/or move traffic into the proper travelpath prior to merging/exiting with/from the main line traffic. This shall be completed before installing the mainline pattern past the ramp or intersecting roadway.

3.g) Prior to installing a pattern, any conflicting existing signs shall be covered with an opaque material. Once the pattern is removed, the existing signs shall be uncovered.

3.h) On limited access roadways, workers are prohibited from crossing the travel lanes to install and remove signs or other devices on the opposite side of the roadway. Any signs or devices on the opposite side of the roadway shall be installed and removed separately.

SECTION 4. USE OF HIGH MOUNTED INTERNALLY ILLUMINATED FLASHING ARROW

4.a) On limited access roadways, one Flashing Arrow shall be used for each lane that is closed. The Flashing Arrow shall be installed concurrently with the installation of the traffic control pattern and its placement shall be as shown on the traffic control plan. For multiple lane closures, one Flashing Arrow is required for each lane closed. If conditions warrant, additional Flashing Arrows should be employed (i.e.: curves, major ramps, etc.).

4.b) On non-limited access roadways, the use of a Flashing Arrow for lane closures is optional. The roadway geometry, sight line distance, and traffic volume should be considered in the decision to use the Flashing Arrow.

4.c) The Flashing Arrow shall not be used on two lane, two-way roadways for temporary alternating one-way traffic operations.

4.d) The Flashing Arrow board display shall be in the “arrow” mode for lane closure tapers and in the “caution” mode (four corners) for shoulder work, blocking the shoulder, or roadside work near the shoulder. The Flashing Arrow shall be in the “caution” mode when it is positioned in the closed lane.

4.e) The Flashing Arrow shall not be used on a multi-lane roadway to laterally shift all lanes of traffic, because unnecessary lane changing may result.

SECTION 5. USE OF TRUCK MOUNTED IMPACT ATTENUATOR VEHICLES (TMAs)

5.a) For lane closures on limited access roadways, a minimum of two TMAs shall be used to install and remove traffic control patterns. If two TMAs are not available, the pattern shall not be installed.

5.b) On non-limited access roadways, the use of TMAs to install and remove patterns closing a lane(s) is optional. The roadway geometry, sight line distance, and traffic volume should be considered in the decision to utilize the TMAs.

5.c) Generally, to establish the advance and transition signing, one TMA shall be placed on the shoulder and the second TMA shall be approximately 1,000 feet ahead blocking the lane. The flashing arrow board mounted on the TMA should be in the “flashing arrow” mode when taking the lane. The sign truck and workers should be immediately ahead of

the second TMA. In no case shall the TMA be used as the sign truck or a work truck. Once the transition is in place, the TMAs shall travel in the closed lane until all Changeable Message Signs, signs, Flashing Arrows, and cones/drums are installed. The flashing arrow board mounted on the TMA should be in the "caution" mode when traveling in the closed lane.

5.d) A TMA shall be placed prior to the first work area in the pattern. If there are multiple work areas within the same pattern, then additional TMAs shall be positioned at each additional work area as needed. The flashing arrow board mounted on the TMA should be in the "caution" mode when in the closed lane.

5.e) TMAs shall be positioned a sufficient distance prior to the workers or equipment being protected to allow for appropriate vehicle roll-ahead in the event that the TMA is hit, but not so far that an errant vehicle could travel around the TMA and into the work area. For additional placement and use details, refer to the specification entitled "Type 'D' Portable Impact Attenuation System". Some operations, such as paving and concrete repairs, do not allow for placement of the TMA(s) within the specified distances. In these situations, the TMA(s) should be placed at the beginning of the work area and shall be advanced as the paving or concrete operations proceed.

5.f) TMAs should be paid in accordance with how the unit is utilized. When it is used as a TMA and is in the proper location as specified, and then it should be paid at the specified hourly rate for "Type 'D' Portable Impact Attenuation System". When the TMA is used as a Flashing Arrow, it should be paid at the daily rate for "High Mounted Internally Illuminated Flashing Arrow". If a TMA is used to install and remove a pattern and then is used as a Flashing Arrow, the unit should be paid as a "Type 'D' Portable Impact Attenuation System" for the hours used to install and remove the pattern, typically 2 hours (1 hour to install and 1 hour to remove), and is also paid for the day as a "High Mounted Internally Illuminated Flashing Arrow".

SECTION 6. USE OF TRAFFIC DRUMS AND TRAFFIC CONES

6.a) Traffic drums shall be used for taper channelization on limited-access roadways, ramps, and turning roadways and to delineate raised catch basins and other hazards.

6.b) Traffic drums shall be used in place of traffic cones in traffic control patterns that are in effect for more than a 36-hour duration.

6.c) Traffic Cones less than 42 inches in height shall not be used on limited-access roadways or on non-limited access roadways with a posted speed limit of 45 mph and above.

6.d) Typical spacing of traffic drums and/or cones shown on the Traffic Control Plans in the Contract are maximum spacings and may be reduced to meet actual field conditions as required.

SECTION 7. USE OF (REMOTE CONTROLLED) CHANGEABLE MESSAGE SIGNS (CMS)

7.a) For lane closures on limited access roadways, one CMS shall be used in advance of the traffic control pattern. Prior to installing the pattern, the CMS shall be installed and in operation, displaying the appropriate lane closure information (i.e.: Left Lane Closed - Merge Right). The CMS shall be positioned ½ - 1 mile ahead of the lane closure taper. If the nearest Exit ramp is greater than the specified ½ - 1 mile distance, than an additional CMS shall be positioned a sufficient distance ahead of the Exit ramp to alert motorists to the work and therefore offer them an opportunity to take the exit.

7.b) CMS should not be installed within 1000 feet of an existing CMS.

7.c) On non-limited access roadways, the use of CMS for lane closures is optional. The roadway geometry, sight line distance, and traffic volume should be considered in the decision to use the CMS.

7.d) The advance CMS is typically placed off the right shoulder, 5 feet from the edge of pavement. In areas where the CMS cannot be placed beyond the edge of pavement, it may be placed on the paved shoulder with a minimum of five (5) traffic drums placed in a taper in front of it to delineate its position. The advance CMS shall be adequately protected if it is used for a continuous duration of 36 hours or more.

7.e) When the CMS are no longer required, they should be removed from the clear zone and have the display screen cleared and turned 90° away from the roadway.

7.f) The CMS generally should not be used for generic messages (ex: Road Work Ahead, Bump Ahead, Gravel Road, etc.).

7.g) The CMS should be used for specific situations that need to command the motorist's attention which cannot be conveyed with standard construction signs (Examples include: Exit 34 Closed Sat/Sun - Use Exit 35, All Lanes Closed - Use Shoulder, Workers on Road - Slow Down).

7.h) Messages that need to be displayed for long periods of time, such as during stage construction, should be displayed with construction signs. For special signs, please coordinate with the Office of Construction and the Division of Traffic Engineering for the proper layout/dimensions required.

7.i) The messages that are allowed on the CMS are as follows:

Message No.	Frame 1	Frame 2	Message No.	Frame 1	Frame 2
1	LEFT LANE CLOSED	MERGE RIGHT	9	LANES CLOSED AHEAD	REDUCE SPEED
2	2 LEFT LANES CLOSED	MERGE RIGHT	10	LANES CLOSED AHEAD	USE CAUTION
3	LEFT LANE CLOSED	REDUCE SPEED	11	WORKERS ON ROAD	REDUCE SPEED
4	2 LEFT LANES CLOSED	REDUCE SPEED	12	WORKERS ON ROAD	SLOW DOWN
5	RIGHT LANE CLOSED	MERGE LEFT	13	EXIT XX CLOSED	USE EXIT YY
6	2 RIGHT LANES CLOSED	MERGE LEFT	14	EXIT XX CLOSED USE YY	FOLLOW DETOUR
7	RIGHT LANE CLOSED	REDUCE SPEED	15	2 LANES SHIFT AHEAD	USE CAUTION
8	2 RIGHT LANES CLOSED	REDUCE SPEED	16	3 LANES SHIFT AHEAD	USE CAUTION

For any other message(s), approval must be received from the Office of Construction prior to their use. No more than two (2) displays shall be used within any message cycle.

SERIES 16 SIGNS

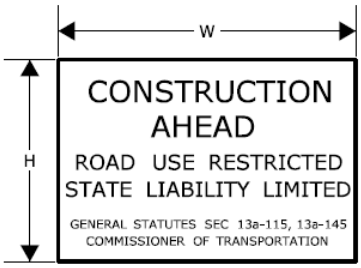

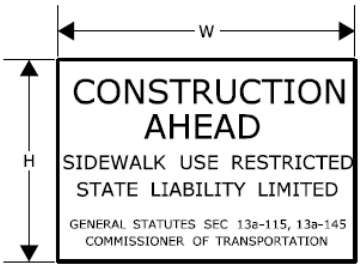

		W H
16-E	80-1605	84" x 60"
16-H	80-1608	60" x 42"
16-M	80-1613	30" x 24"

		W H
16-S	80-1619	48" x 30"

THE 16-S SIGN SHALL BE USED ON ALL PROJECTS THAT REQUIRE SIDEWALK RECONSTRUCTION OR RESTRICT PEDESTRIAN TRAVEL ON AN EXISTING SIDEWALK.

SERIES 16 SIGNS SHALL BE INSTALLED IN ADVANCE OF THE TRAFFIC CONTROL PATTERNS TO ALLOW MOTORISTS THE OPPORTUNITY TO AVOID A WORK ZONE. SERIES 16 SIGNS SHALL BE INSTALLED ON ANY MAJOR INTERSECTING ROADWAYS THAT APPROACH THE WORK ZONE. ON LIMITED-ACCESS HIGHWAYS, THESE SIGNS SHALL BE LOCATED IN ADVANCE OF THE NEAREST UPSTREAM EXIT RAMP AND ON ANY ENTRANCE RAMPS PRIOR TO OR WITHIN THE WORK ZONE LIMITS.

THE LOCATION OF SERIES 16 SIGNS CAN BE FOUND ELSEWHERE IN THE PLANS OR INSTALLED AS DIRECTED BY THE ENGINEER.

SIGNS 16-E AND 16-H SHALL BE POST-MOUNTED.

SIGN 16-E SHALL BE USED ON ALL EXPRESSWAYS.

SIGN 16-H SHALL BE USED ON ALL RAMPS, OTHER STATE ROADWAYS, AND MAJOR TOWN/CITY ROADWAYS.

SIGN 16-M SHALL BE USED ON OTHER TOWN ROADWAYS.

REGULATORY SIGN "ROAD WORK AHEAD, FINES DOUBLED"

THE REGULATORY SIGN "ROAD WORK AHEAD FINES DOUBLED" SHALL BE INSTALLED FOR ALL WORK ZONES THAT OCCUR ON ANY STATE HIGHWAY IN CONNECTICUT WHERE THERE ARE WORKERS ON THE HIGHWAY OR WHEN THERE IS OTHER THAN EXISTING TRAFFIC OPERATIONS.

THE "ROAD WORK AHEAD FINES DOUBLED" REGULATORY SIGN SHALL BE PLACED AFTER THE SERIES 16 SIGN AND IN ADVANCE OF THE "ROAD WORK AHEAD" SIGN.

31-1906

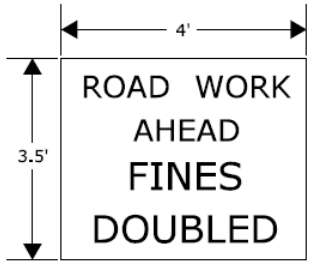

"END ROAD WORK" SIGN

THE LAST SIGN IN THE PATTERN MUST BE THE "END ROAD WORK" SIGN.

80-9612

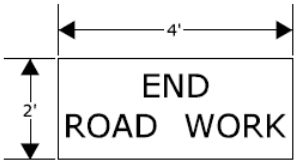

SCALE: NONE

CONSTRUCTION TRAFFIC CONTROL PLAN

REQUIRED SIGNS

CONNECTICUT DEPARTMENT OF TRANSPORTATION
BUREAU OF ENGINEERING & CONSTRUCTION

APPROVED Charles S. Harlow 2012.06.05 11:35:43-04'00'
PRINCIPAL ENGINEER

NOTES FOR TRAFFIC CONTROL PLANS

1. IF A TRAFFIC STOPPAGE OCCURS IN ADVANCE OF SIGN (A), THEN AN ADDITIONAL SIGN (A) SHALL BE INSTALLED IN ADVANCE OF THE STOPPAGE.

2. SIGNS (AA), (A), AND (D) SHOULD BE OMITTED WHEN THESE SIGNS HAVE ALREADY BEEN INSTALLED TO DESIGNATE A LARGER WORK ZONE THAN THE WORK ZONE THAT IS ENCOMPASSED ON THIS PLAN.

3. SEE TABLE 1 FOR ADJUSTMENT OF TAPERS IF NECESSARY.

4. IF THIS PLAN REMAINS IN CONTINUOUS OPERATION FOR MORE THAN 36 HOURS, THEN TRAFFIC DRUMS SHALL BE USED IN PLACE OF TRAFFIC CONES.

5. ANY LEGAL SPEED LIMIT SIGNS WITHIN THE LIMITS OF A ROADWAY / LANE CLOSURE AREA SHALL BE COVERED WITH AN OPAQUE MATERIAL WHILE THE CLOSURE IS IN EFFECT, AND UNCOVERED WHEN THE ROADWAY / LANE CLOSURE IS RE-OPENED TO ALL LANES OF TRAFFIC.

6. IF THIS PLAN REMAINS IN CONTINUOUS OPERATION FOR MORE THAN 36 HOURS, THEN ANY EXISTING CONFLICTING PAVEMENT MARKINGS SHALL BE ERADICATED OR COVERED, AND TEMPORARY PAVEMENT MARKINGS THAT DELINEATE THE PROPER TRAVELPATHS SHALL BE INSTALLED.

7. DISTANCES BETWEEN SIGNS IN THE ADVANCE WARNING AREA MAY BE REDUCED TO 100' ON LOW-SPEED URBAN ROADS (SPEED LIMIT < 40 MPH).

8. IF THIS PLAN IS TO REMAIN IN OPERATION DURING THE HOURS OF DARKNESS, INSTALL BARRICADE WARNING LIGHTS - HIGH INTENSITY ON ALL POST-MOUNTED DIAMOND SIGNS IN THE ADVANCE WARNING AREA.

9. A CHANGEABLE MESSAGE SIGN SHALL BE INSTALLED ONE HALF TO ONE MILE IN ADVANCE OF THE LANE CLOSURE TAPER.

10 SIGN (P) SHALL BE MOUNTED A MINIMUM OF 7 FEET FROM THE PAVEMENT SURFACE TO THE BOTTOM OF THE SIGN.

TABLE 1 - MINIMUM TAPER LENGTHS

POSTED SPEED LIMIT (MILES PER HOUR)	MINIMUM TAPER LENGTH FOR A SINGLE LANE CLOSURE
30 OR LESS	180' (55m)
35	250' (75m)
40	320' (100m)
45	540' (165m)
50	600' (180m)
55	660' (200m)
65	780' (240m)

METRIC CONVERSION CHART (1" = 25mm)

ENGLISH	METRIC	ENGLISH	METRIC	ENGLISH	METRIC
12"	300mm	42"	1050mm	72"	1800mm
18"	450mm	48"	1200mm	78"	1950mm
24"	600mm	54"	1350mm	84"	2100mm
30"	750mm	60"	1500mm	90"	2250mm
36"	900mm	66"	1650mm	96"	2400mm

SCALE: NONE

CONSTRUCTION TRAFFIC CONTROL PLAN

NOTES

CONNECTICUT DEPARTMENT OF TRANSPORTATION
BUREAU OF ENGINEERING & CONSTRUCTION

APPROVED Charles S. Harlow 2012.06.05 15:50:35-04'00'
PRINCIPAL ENGINEER

WORK IN RIGHT LANE - 4 LANE UNDIVIDED HIGHWAY

SIGN FACE
86 SQ. FT (MIN.)

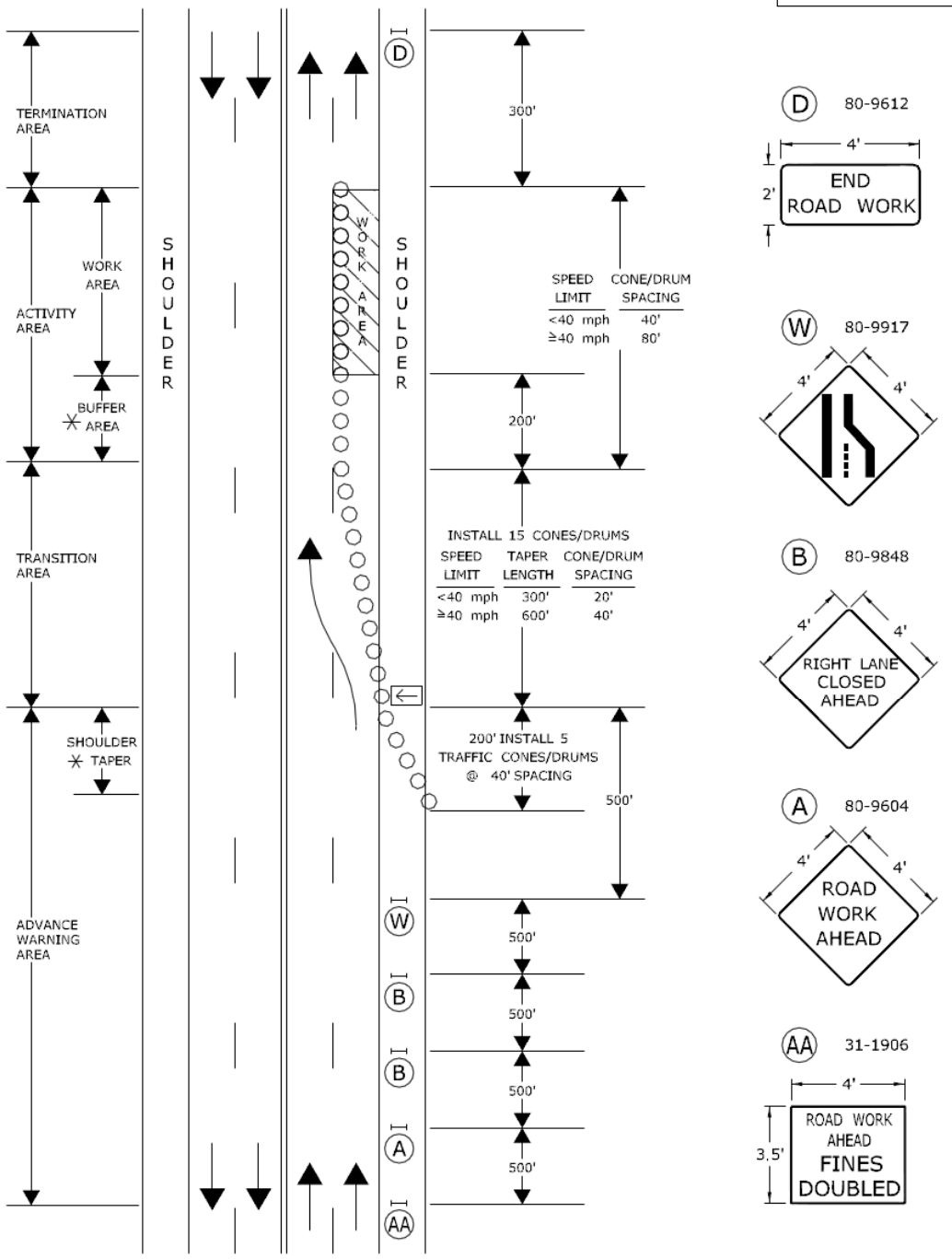

TRAFFIC CONE **OR** TRAFFIC DRUM
OPTIONAL TRAFFIC DRUM PORTABLE SIGN SUPPORT
HIGH MOUNTED INTERNALLY ILLUMINATED FLASHING ARROW

SCALE: NONE

CONSTRUCTION TRAFFIC CONTROL PLAN

PLAN 10

SEE NOTES 1, 2, 3, 4, 5, 6, 7, 8

CONNECTICUT DEPARTMENT OF TRANSPORTATION
BUREAU OF ENGINEERING & CONSTRUCTION

APPROVED Charles S. Harlow 2012.06.05 15:54:15-04'00'
PRINCIPAL ENGINEER

WORK IN LEFT LANE - 4 LANE UNDIVIDED HIGHWAY

SIGN FACE
124 SQ. FT (MIN.)

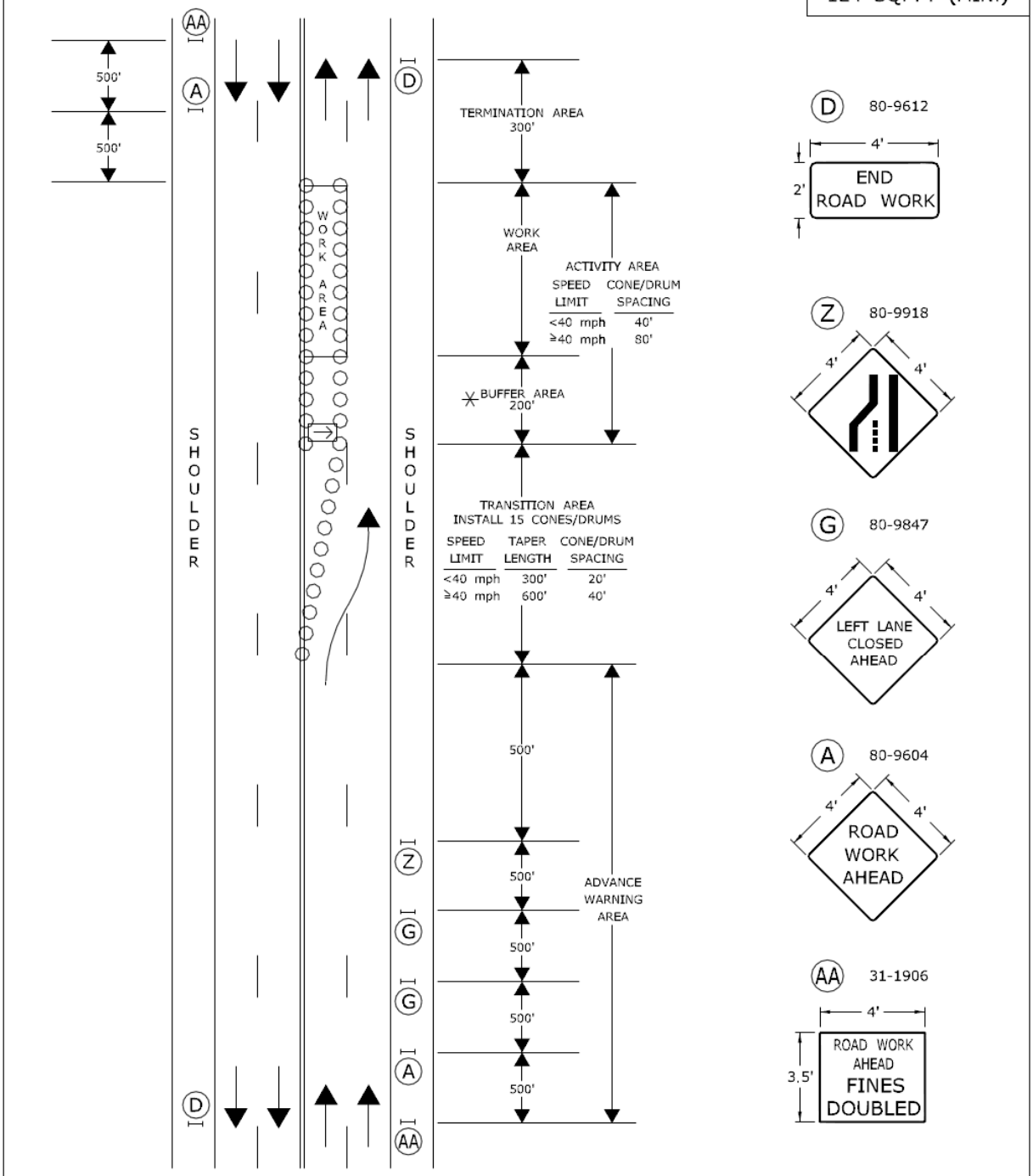

TRAFFIC CONE **OR** TRAFFIC DRUM
OPTIONAL TRAFFIC DRUM PORTABLE SIGN SUPPORT
HIGH MOUNTED INTERNALLY ILLUMINATED FLASHING ARROW

SCALE: NONE

CONSTRUCTION TRAFFIC CONTROL PLAN

PLAN 11

SEE NOTES 1, 2, 3, 4, 5, 6, 7, 8

CONNECTICUT DEPARTMENT OF TRANSPORTATION
BUREAU OF ENGINEERING & CONSTRUCTION

APPROVED Charles S. Harlow 2012.06.05 15:54:36-04'00'
PRINCIPAL ENGINEER

WORK IN BOTH LANES - 4 LANE UNDIVIDED HIGHWAY

SIGN FACE
204 SQ. FT (MIN.)

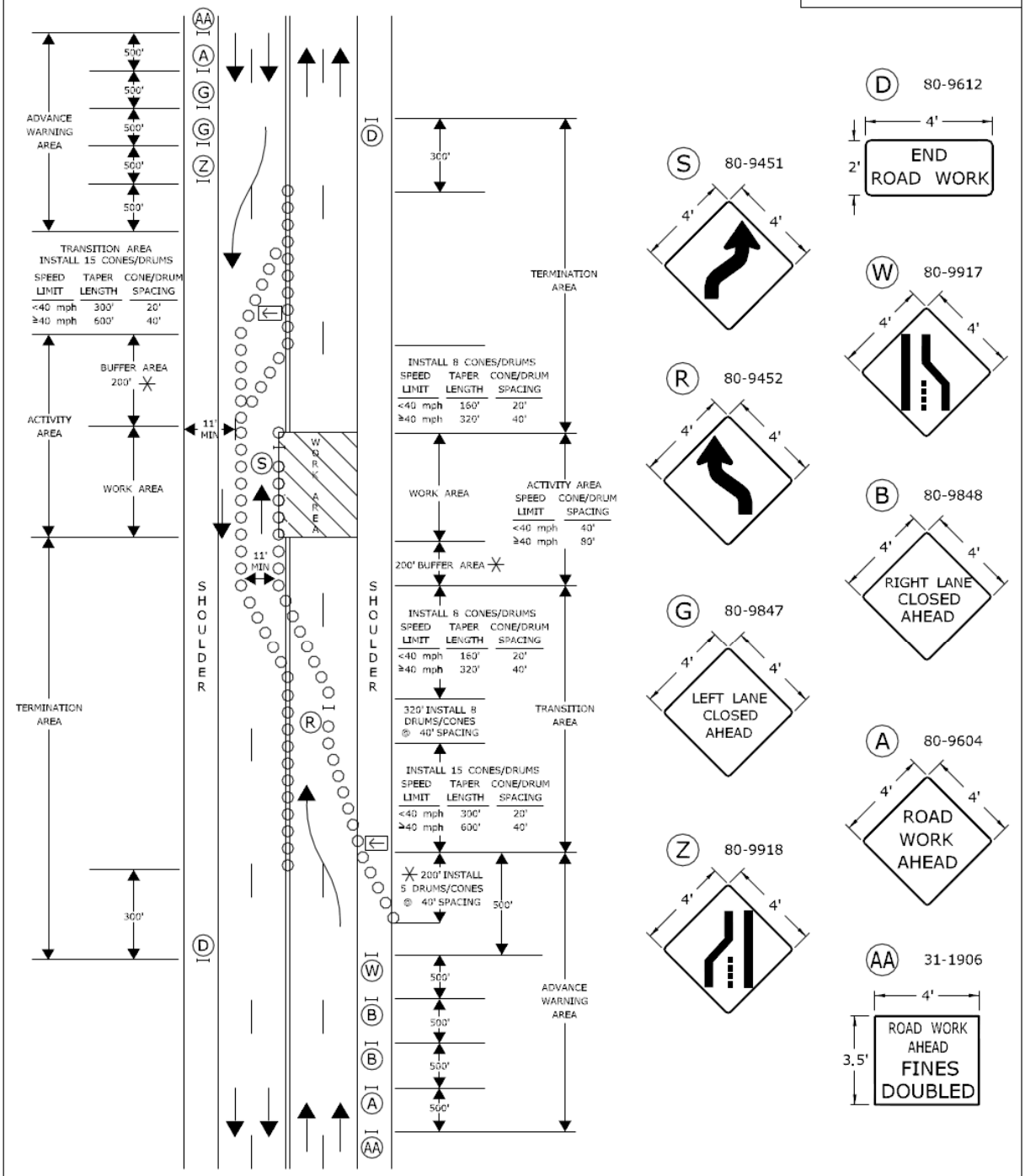

TRAFFIC CONE **OR** TRAFFIC DRUM
OPTIONAL TRAFFIC DRUM PORTABLE SIGN SUPPORT
HIGH MOUNTED INTERNALLY ILLUMINATED FLASHING ARROW

SCALE: NONE

CONSTRUCTION TRAFFIC CONTROL PLAN

PLAN 12

SEE NOTES 1, 2, 3, 4, 5, 6, 7, 8

CONNECTICUT DEPARTMENT OF TRANSPORTATION
BUREAU OF ENGINEERING & CONSTRUCTION

APPROVED Charles S. Harlow 2012.06.05 15:55:01-04'00'
PRINCIPAL ENGINEER

WORK IN TRAVEL LANE AND SHOULDER
TWO LANE HIGHWAY
ALTERNATING ONE-WAY TRAFFIC OPERATIONS

SIGN FACE
108 SQ. FT (MIN.)

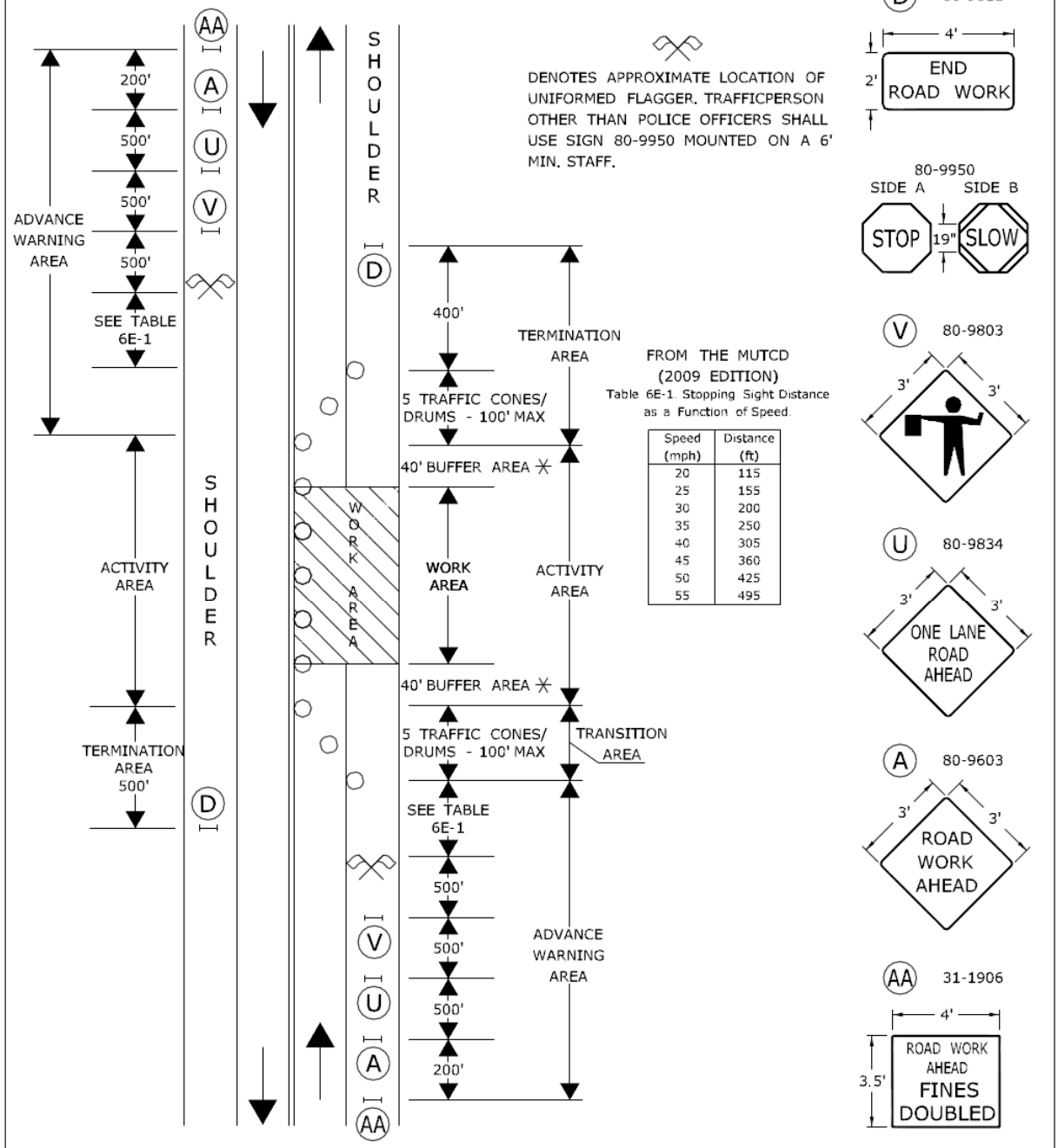

FROM THE MUTCD
(2009 EDITION)
Table 6E-1. Stopping Sight Distance as a Function of Speed.

Speed (mph)	Distance (ft)
20	115
25	155
30	200
35	250
40	305
45	360
50	425
55	495

TRAFFIC CONE **OR** TRAFFIC DRUM
OPTIONAL TRAFFIC DRUM PORTABLE SIGN SUPPORT
HIGH MOUNTED INTERNALLY ILLUMINATED FLASHING ARROW

SCALE: NONE

CONSTRUCTION TRAFFIC CONTROL PLAN
PLAN 13 - SHEET 1 OF 2
SEE NOTES 1, 2, 4, 6, 7, 8

CONNECTICUT DEPARTMENT OF TRANSPORTATION
BUREAU OF ENGINEERING & CONSTRUCTION

APPROVED Charles S. Harlow 2012.06.05 15:55:23-04'00'
PRINCIPAL ENGINEER

WORK IN SHOULDER - TWO LANE HIGHWAY

SIGN FACE
71 SQ. FT (MIN.)

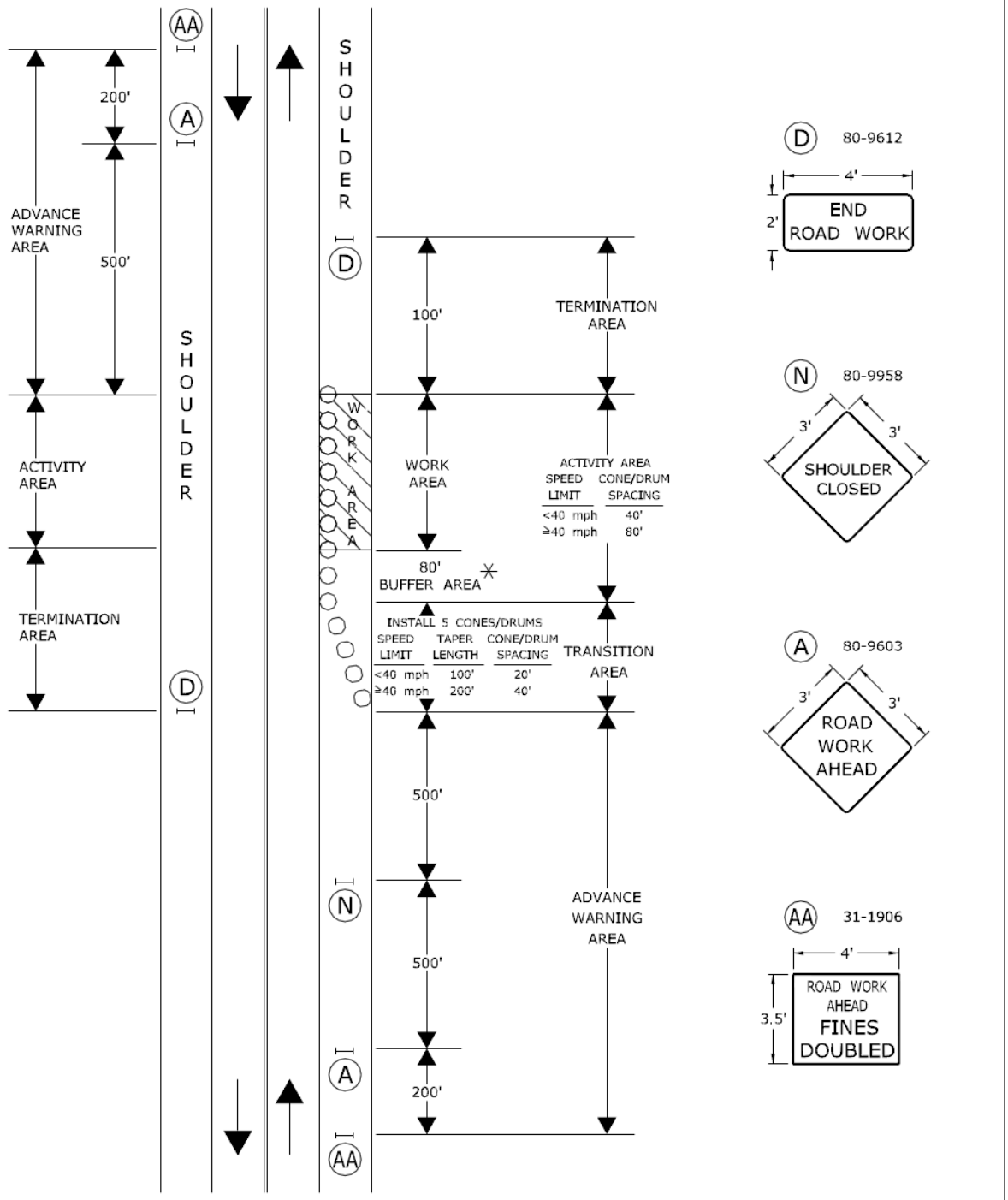

TRAFFIC CONE **OR** TRAFFIC DRUM
OPTIONAL TRAFFIC DRUM PORTABLE SIGN SUPPORT
HIGH MOUNTED INTERNALLY ILLUMINATED FLASHING ARROW

SCALE: NONE

CONSTRUCTION TRAFFIC CONTROL PLAN

PLAN 14

SEE NOTES 1, 2, 4, 7, 8

CONNECTICUT DEPARTMENT OF TRANSPORTATION
BUREAU OF ENGINEERING & CONSTRUCTION

APPROVED Charles S. Harlow 2012.06.05 15:56:09-04'00'
PRINCIPAL ENGINEER

WORK IN TRAVEL LANE AND SHOULDER
TWO LANE HIGHWAY

SIGN FACE
62 SQ. FT (MIN.)

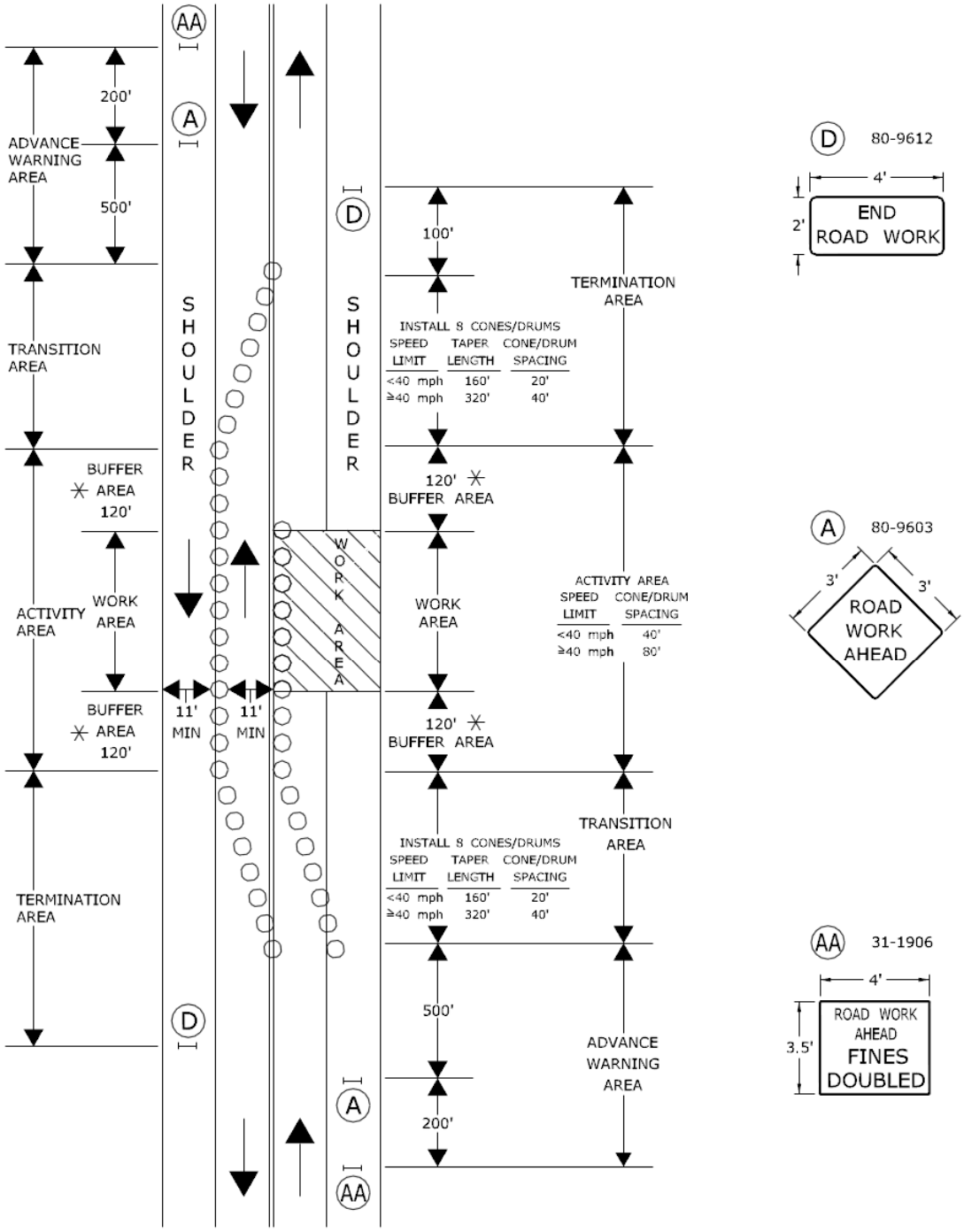

TRAFFIC CONE **OR** TRAFFIC DRUM
OPTIONAL TRAFFIC DRUM PORTABLE SIGN SUPPORT
HIGH MOUNTED INTERNALLY ILLUMINATED FLASHING ARROW

SCALE: NONE

CONSTRUCTION TRAFFIC CONTROL PLAN
PLAN 15
SEE NOTES 1, 2, 4, 6, 7, 8

CONNECTICUT DEPARTMENT OF TRANSPORTATION
BUREAU OF ENGINEERING & CONSTRUCTION

APPROVED Charles S. Harlow 2012.06.05 15:56:29-04'00'
PRINCIPAL ENGINEER

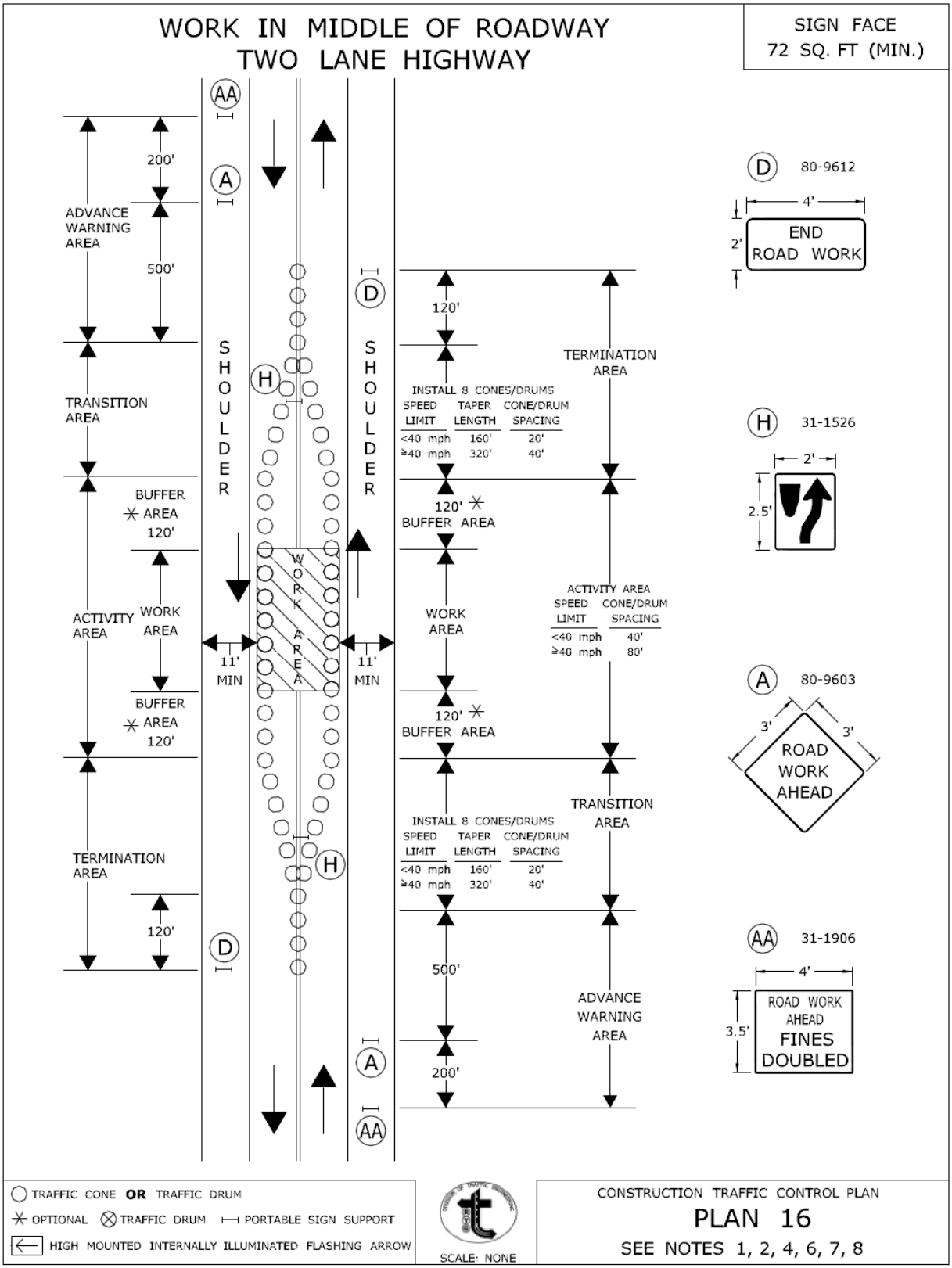
WORK IN MIDDLE OF ROADWAY
TWO LANE HIGHWAY
SIGN FACE
72 SQ. FT (MIN.)
AA
A
D
H
200'
500'
ADVANCE WARNING AREA
TRANSITION AREA
BUFFER AREA 120'
ACTIVITY AREA
WORK AREA
BUFFER AREA 120'
TERMINATION AREA
120'
SHOULDER
SHOULDER
WORK AREA
11' MIN
11' MIN
120'
TERMINATION AREA
INSTALL 8 CONES/DRUMS
SPEED LIMIT | TAPER LENGTH | CONE/DRUM SPACING
<40 mph | 160' | 20'
≥40 mph | 320' | 40'
120' BUFFER AREA
WORK AREA
ACTIVITY AREA
SPEED LIMIT | CONE/DRUM SPACING
<40 mph | 40'
≥40 mph | 80'
120' BUFFER AREA
TRANSITION AREA
INSTALL 8 CONES/DRUMS
SPEED LIMIT | TAPER LENGTH | CONE/DRUM SPACING
<40 mph | 160' | 20'
≥40 mph | 320' | 40'
500'
ADVANCE WARNING AREA
200'
D 80-9612
4'
2'
END ROAD WORK
H 31-1526
2'
2.5'
A 80-9603
3'
3'
ROAD WORK AHEAD
AA 31-1906
4'
3.5'
ROAD WORK AHEAD
FINES DOUBLED
TRAFFIC CONE OR TRAFFIC DRUM
OPTIONAL
TRAFFIC DRUM
PORTABLE SIGN SUPPORT
HIGH MOUNTED INTERNALLY ILLUMINATED FLASHING ARROW
SCALE: NONE
CONSTRUCTION TRAFFIC CONTROL PLAN
PLAN 16
SEE NOTES 1, 2, 4, 6, 7, 8
CONNECTICUT DEPARTMENT OF TRANSPORTATION
BUREAU OF ENGINEERING & CONSTRUCTION
APPROVED
Charles S. Harlow
2012.06.05 15:56:51-04'00'
PRINCIPAL ENGINEER

WORK IN TRAVEL LANE AND SHOULDER
TWO LANE HIGHWAY
ALTERNATING ONE-WAY TRAFFIC OPERATIONS
STOP SIGN CONTROL

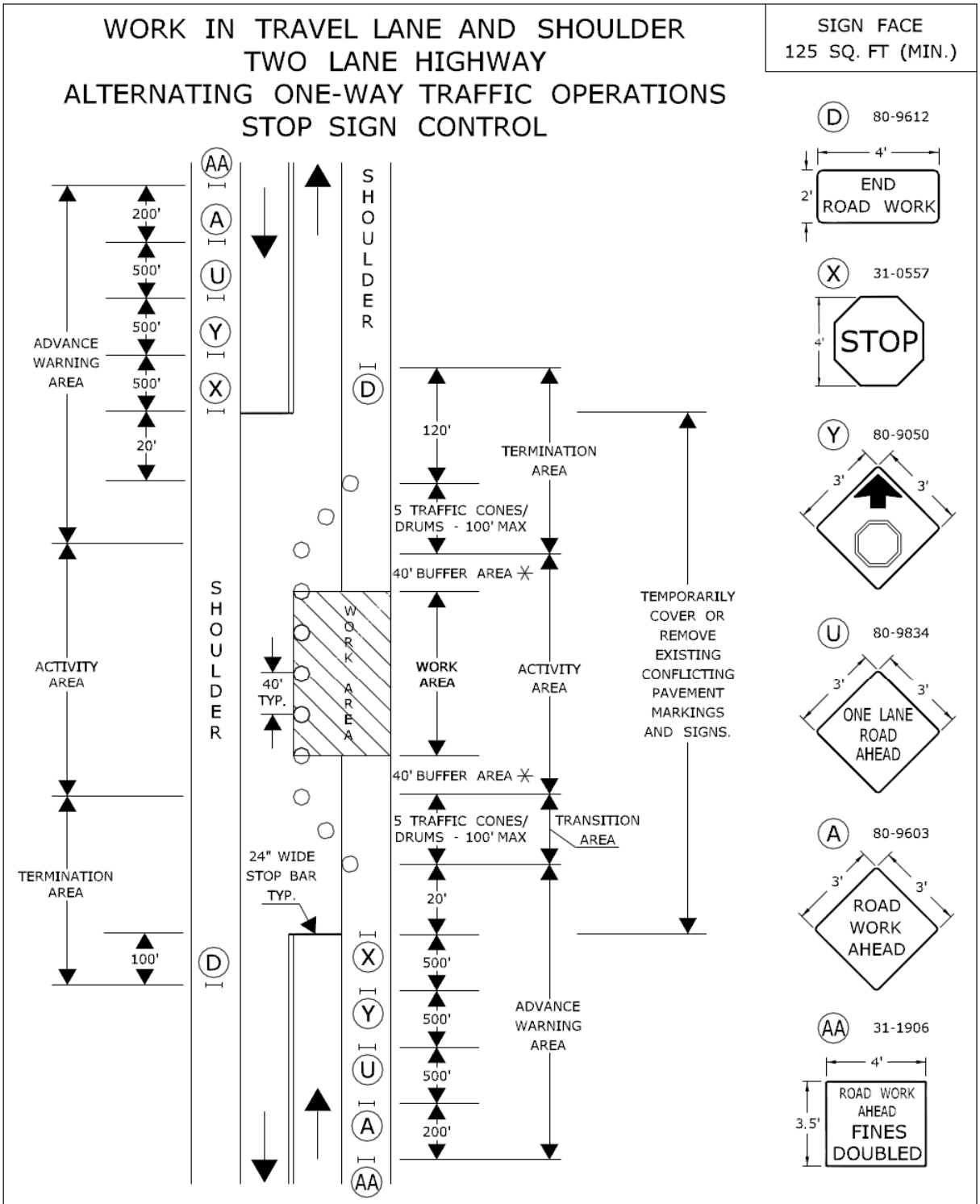

TRAFFIC CONE **OR** TRAFFIC DRUM
OPTIONAL TRAFFIC DRUM PORTABLE SIGN SUPPORT
HIGH MOUNTED INTERNALLY ILLUMINATED FLASHING ARROW

SCALE: NONE

CONSTRUCTION TRAFFIC CONTROL PLAN
PLAN 18
SEE NOTES 1, 2, 4, 7, 8

CONNECTICUT DEPARTMENT OF TRANSPORTATION
BUREAU OF ENGINEERING & CONSTRUCTION

APPROVED Charles S. Harlow 2012.06.05 15:57:37-04'00'
PRINCIPAL ENGINEER

Article 9.71.05 – Basis of Payment is supplemented by the following:

The temporary relocation of signs and supports, and the furnishing, installation and removal of any temporary supports shall be paid for under the item "Maintenance and Protection of Traffic". Temporary overhead sign supports and foundations shall be paid for under the appropriate item(s).

The cost of furnishing, installing, and removing the material for the 4H:1V traversable slope shall be paid for under the item "Maintenance and Protection of Traffic."

The contract lump sum price for "Maintenance and Protection of Traffic shall also include temporary relocating existing signs and sign supports as many times as deemed necessary and furnishing and installing, and removing temporary sign supports and foundations if necessary during construction of the project.

ITEM #0974001A – REMOVAL OF EXISTING MASONRY

This Special Provision applies to Sound Beach Avenue Bridge - Site No. 1 and Tomac Avenue Bridge – Site No. 2.

Work under this item shall conform to the requirements of Section 9.74 amended and supplemented as follows:

9.74.03 - Construction Methods: Add the following:

The stone masonry abutment backwall, and stone or concrete bridge seat shall be removed in stages to the limits shown on the plans. The stone masonry and/or concrete shall be sawcut in accordance with stages of construction. Pneumatic hammers or any other method approved by the Engineer may be used to remove the stone masonry. Maximum 30–pound hammers shall be used for general removal, while maximum 15-pound hammers shall be used near portions of the structure to remain. Stones, which are to remain, which may become dislodged or loosened during removal work shall be reset with mortar or replaced with high early strength concrete, as directed by the Engineer. Cost of performing this work shall be considered included in payment for this item.

The Contractor shall take necessary precautions to prevent any damage to the portions of the structure to remain. Any damage shall be repaired by the Contractor, as directed by the Engineer, and at no cost to the State.

When removing the stone masonry, the Contractor shall take necessary precautions to prevent debris from dropping to areas below the structure onto the roadway or sidewalk areas.

The Contractor shall dispose of, all debris from the site.

9.74.05 - Basis of Payment: Delete in its entirety and replace with the following:

This work will be paid for at the contract unit price per cubic yard for “Removal of Existing Masonry”, which price shall include all equipment, tools and labor incidental thereto.

Pay Item	Pay Unit
Removal of Existing Masonry	C.Y.

ITEM #0975004A - MOBILIZATION AND PROJECT CLOSEOUT

9.75.01 – Description: This item shall consist of all work necessary for the movement of personnel and furnishing equipment to the project site, and for the establishment of all Contractors' field offices, buildings and other facilities necessary to the performance of the work. In addition, this item shall include the preparation of work plans and submittals necessary to facilitate the commencement of physical construction. These initial submittals are identified elsewhere in the contract and may include project schedules, project management plans, safety plans, quality plans, erosion and sedimentation control plans and similar submittals addressing the general sequencing and management of the project. This item shall also include demobilization of plant and equipment, completion of all punchlist work, and administrative closeout items necessary to satisfy all contract requirements.

This item may not be subcontracted, in whole or part.

9.75.04 – Method of Measurement: This work will be measured for payment in the manner described hereinafter; however, the determination of the total contract price earned shall not include the amount of mobilization earned during the period covered by the current monthly estimate - but shall include amounts previously earned and certified for payment.

1. When the first payment estimate is made, 25 percent of the lump sum bid price for this item or 2.5 percent of the total original contract price, whichever is less, shall be certified for payment.

2. When the initial project submittals necessary to begin construction are accepted by the Engineer, 50 percent of the lump sum bid price for this item or 5.0 percent of the total original contract price, whichever is less, minus any previous payments, shall be certified for payment.

3. When the initial project submittals are accepted by the Engineer, and 15 percent of the total original contract price is earned, 70 percent of the lump sum price of this item or 7.0 percent of the total original contract price, whichever is less, minus any previous payments, will be certified for payment.

4. When 30 percent of the total original contract price is earned 85 percent of the lump sum price of this item or 8.5 percent of the total original contract price, whichever is less, minus any previous payments, will be certified for payment.

5. When the requirements of Article 1.08.13 have been satisfied 95 percent of the lump sum price of this item, minus any previous payments, will be certified for payment.

6. When the requirements of Article 1.08.14 have been satisfied 100 percent of the lump sum price of this item, minus any previous payments, will be certified for payment.

Nothing herein shall be construed to limit or preclude partial payments otherwise provided for by the contract.

9.75.05 – Basis of Payment: This work will be paid for at the contract lump sum price for "Mobilization and Project Closeout" which price shall include materials, equipment, tools, transportation, labor and all work incidental thereto.

This item shall not be paid more than one time. If the Contractor is required to mobilize equipment or facilities more than one time, due to reasons solely the responsibility of the Department, any additional efforts will be paid as Extra Work under Section 1.04.05.

Pay Item	Pay Unit
Mobilization and Project Closeout	L.S.

ITEM #0979003A - CONSTRUCTION BARRICADE TYPE III

9.79.01 – Description: The Contractor shall furnish construction barricades to conform to the requirements of NCHRP Report 350 (TL-3) and to the requirements stated in Article 9.71 "Maintenance and Protection of Traffic," as shown on the plans and/or as directed by the Engineer.

9.79.02 – Materials: Prior to using the construction barricades, the Contractor shall submit to the Engineer a copy of the Letter of Acceptance issued by the FHWA to the manufacturer documenting that the devices conform to NCHRP Report 350 (TL-3).

Alternate stripes of white and orange Type III or Type VI reflective sheeting shall be applied to the horizontal members as shown on the plans. Application of the reflective sheeting shall conform to the requirements specified by the reflective sheeting manufacturer. Only one type of sheeting shall be used on a barricade and all barricades furnished shall have the same type of reflective sheeting. Reflective sheeting shall conform to the requirements of Article M.18.09.01.

Construction barricades shall be designed and fabricated so as to prevent them from being blown over or displaced by the wind from passing vehicles. Construction barricades shall be approved by the Engineer before they are used.

9.79.03 – Construction Methods: Ineffective barricades, as determined by the Engineer and in accordance with the ATSSA guidelines contained in "Quality Standards for Work Zone Traffic Control Devices", shall be replaced by the Contractor at no cost to the State.

Barricades that are no longer required shall be removed from the project and shall remain the property of the Contractor.

9.79.04 – Method of Measurement: Construction Barricade Type III will be measured for payment by the number of construction barricades required and used.

9.79.05 – Basis of Payment: "Construction Barricade Type III" required and used will be paid for at the Contract unit price per each. Each barricade will be paid for once, regardless of the number of times it is used.

Pay Item	Pay Unit
Construction Barricade Type III	EA.

ITEM #0980001A – CONSTRUCTION STAKING

9.80.01—Description: The work under this item shall consist of construction layout and reference staking necessary for the proper control and satisfactory completion of all work on the project, except property lines, highway lines, or non-access lines.

9.80.02—Materials: All stakes used for control staking shall be of the same quality as used by the Department for this purpose. For slope limits, pavement edges, gutter lines, etc., where so-called "green" or "working" stakes are commonly used, lesser quality stakes will be acceptable, provided the stakes are suitable for the intended purpose.

9.80.03—Construction Methods: The Department will furnish the Contractor such control points, bench marks, and other data as may be necessary for the construction staking and layout by qualified engineering or surveying personnel as noted elsewhere herein.

The Contractor shall be responsible for the placement and preservation of adequate ties to all control points, necessary for the accurate re-establishment of all base lines, center lines, and all critical grades as shown on the plans.

All stakes, references, and batter boards which may be required for construction operations, signing and traffic control shall be furnished, set and properly referenced by the Contractor. The Contractor shall be solely and completely responsible for the accuracy of the line and grade of all features of the work. Any errors or apparent discrepancies found in previous surveys, plans, specifications or special provisions shall be called to the Engineer's attention immediately for correction or interpretation prior to proceeding with the work.

During roadway construction (or site work), the Contractor shall provide and maintain for the periods needed, as determined by the Engineer, reference stakes at 100 foot intervals outside the slope limits. Further, the Contractor shall provide and maintain reference stakes at 50 foot intervals immediately prior to and during the formation of subgrade and the construction of all subsequent pavement layers. These stakes shall be properly marked as to station, offset and shall be referenced to the proposed grade, even if laser or GPS machine controls are used.

The Contractor shall provide and maintain reference stakes at drainage structures, including reference stakes for the determination of the structure alignments as may be needed for the proper construction of the drainage structure. The reference stakes shall be placed immediately prior to and maintained during the installation of the drainage structure. These stakes shall be properly marked as to station, offset and shall be referenced to the proposed grade.

The Contractor shall furnish copies of data used in setting and referencing stakes and other layout markings used by the Contractor after completion of each operation.

The Contractor shall provide safe facilities for convenient access by Department forces to control points, batter boards, and references.

All staking shall be performed by qualified engineering or surveying personnel who are trained, experienced and skilled in construction layout and staking of the type required under the contract. Prior to start of work, the Contractor shall submit for review and comment the qualifications of personnel responsible for construction staking on the project. On all projects with an original contract value greater than $25 million and bridge rehabilitation and reconstruction projects greater than $10 million, surveying shall be performed under the direct supervision of a Professional Surveyor licensed in the State of Connecticut. The submission shall include a description of the experience and training which the proposed staff possesses and a list of state projects the personnel have worked on previously. All field layout and staking required for the project shall be performed under the direct supervision of a person, or persons, of engineering background experienced in the direction of such work and acceptable to the Engineer. If the personnel responsible for construction staking change during the course of the project, then a revised submittal will be required.

The Department may check the control of the work, as established by the Contractor, at any time as the work progresses. The Contractor will be informed of the results of these checks, but the Department by so doing in no way relieves the Contractor of responsibility for the accuracy of the layout work. The Contractor shall correct or replace, at the Contractor's own expense, any deficient layout and construction work which may be the result of the inaccuracies in the Contractor's staking operations or the failure to report such inaccuracies, or the Contractor's failure to report inaccuracies found in work done by the Department or by others. If, as a result of these inaccuracies, the Department is required to make further studies, redesign, or both, all expenses incurred by the Department due to such inaccuracies will be deducted from any monies due the Contractor.

The Contractor shall furnish all necessary personnel, engineering equipment and supplies, materials, transportation, and work incidental to the accurate and satisfactory completion of this work.

For roadways where the existing pavement markings need to be reestablished:
Prior to any resurfacing or obliteration of existing pavement markings, the Contractor and a representative of the Engineer must establish and document pavement marking control points from the existing markings. These control points shall be used to reestablish the positions of the lanes, the beginnings and endings of tapers, channelization lines for on and off ramps, lane use arrows, stop bars, and any lane transitions in the project area. The Contractor shall use these control points to provide appropriate premarking prior to the installation of the final markings.

The Contractor shall provide and maintain reference stakes and/or markings at 100 foot intervals immediately off the edge of pavement to be used to reestablish the existing pavement markings.

The Contractor shall also provide and maintain reference stakes and/or markings at any point where there is a change in pavement markings to reestablish the existing pavement markings.

For non-limited access roadways
On non-limited access roadways it may be necessary to adjust the final locations of the pavement markings to accommodate pedestrians and bicyclists where feasible. Prior to any resurfacing or obliteration of existing pavement markings, the Contractor, a representative of the Engineer, and a representative of the Division of Traffic Engineering must establish and document pavement marking control points from the existing markings as described above. The control points at that time may be adjusted to provide minimum shoulder widths of 4 to 5 feet wherever possible while maintaining travel lane widths of no less than 11 feet and no more than 12 feet.

9.80.04—Method of Measurement: Construction staking will be at the Contract lump sum for construction staking.
When no price for "Construction Staking" is asked for on the proposal form, the cost of the work described above shall be included in the general cost of the work and no direct payment for "Construction Staking" will be made.

9.80.05—Basis of Payment: Construction staking will be paid for at the Contract lump sum price for "Construction Staking," which price shall include all materials, tools, equipment, labor and work incidental thereto. A schedule of values for payment shall be submitted to the Department for review and comment prior to payment.

Pay Item	Pay Unit
Construction Staking	L.S.

ITEM #1002110A - LIGHT POLE BASE

Description: This item shall consist of furnishing and installing precast concrete bases for the decorative light poles at the locations and to the dimensions and details shown on the plans or as directed by the Engineer and in conformance with these specifications. Rock, in so far as it applies to "Rock in Foundation Excavation," shall be defined as rock in definite ledge formation, boulders, or portions of boulders, cement masonry structures, concrete structures, or Portland cement concrete pavement which has a cross-sectional area that exceeds 50% of the cross-sectional area of the designed foundation hole.

Materials: The materials for this work shall conform to the applicable requirements of Article 10.02.02 of the Standard Specifications and the following requirements:

Concrete light pole foundation shall be precast as detailed on the Drawings and approved by the lighting manufacturer.

Construction Methods: Excavation for light pole foundation shall be done in conformance with Article 10.00.11 of the Standard Specifications.

The top of the foundation shall be level in all respects. All conduits shall be capped with standard pipe caps until the cable is installed. Electrical conduit of the size indicated shall extend 2 feet outside the foundation. All portions of the foundations which will remain exposed to view shall be to the satisfaction of the Engineer.

Where a foundation is placed within or adjacent to a concrete sidewalk, the entire section of sidewalk between joints shall be replaced in accordance with Section 9.21, unless otherwise directed by the Engineer.

Method of Measurement: This work will be measured for payment by the number of complete and accepted decorative light pole foundations installed and accepted in place. This measurement shall include the electrical conduit sweeps which shall extend 2 feet outside of the foundation.

The rock-in-foundation excavation will be measured from the top of rock to the bottom of rock excavation.

Basis of Payment: This work will be paid for at the Contract unit price each for "Light Pole Base", complete in place, which price shall include all work and materials, including excavation, disposal of surplus material, concrete, electrical conduit sweeps, conduit caps, ground rod, sleeves, bonding bushings, anchor bolts, backfill, topsoil, grading, seeding, fertilizing, mulching, riprap, processed aggregate base, restoration of bituminous concrete sidewalk and pavement surfaces. All concrete sidewalk replaced due to foundation installation shall be paid for at the Contract unit price for "Concrete Sidewalk".

When rock is encountered within the limits of excavation, its removal will be paid for at the Contract unit price per vertical foot for "Rock-in-Foundation Excavation," which price shall

include any additional excavation to remove the rock and any additional concrete required to fill the excavation beyond the designed foundation hole dimensions.

Pay Item	Pay Unit
Light Pole Base	EA

ITEM #1003380A- DECORATIVE LIGHT POLE AND FIXTURE TYPE A3
ITEM #1003382A - DECORATIVE LIGHT POLE AND FIXTURE TYPE A2-3
ITEM #1003383A - DECORATIVE LIGHT POLE AND FIXTURE TYPE AU3
ITEM #1003384A - DECORATIVE LIGHT POLE AND FIXTURE TYPE UU23
ITEM #1003385A - DECORATIVE LIGHT FIXTURE TYPE WM3
ITEM #1003386A - DECORATIVE LIGHT FIXTURE TYPE WM4
ITEM #1003387A - DECORATIVE LIGHT FIXTURE TYPE SL1

Description: This item shall consist of furnishing and installing exterior lighting fixtures, LED lamps, drivers, poles, anchor bolts, grounding wire, connections and accessories, complete in place, at the locations and to the dimensions and details shown on the plans or as directed by the Engineer.

1. The lighting system shall operate from 120 volts, single phase, three wire, 60 Hertz systems or as called for on the project plans. LED luminaires, complete with drivers, shall be installed as shown on the plans.
2. Panelboards, fixtures, outlets, receptacles, switches and all other applicable lighting system components and details shall be as shown on the plans or as specified.
3. The plans show the location, number, size and type of lighting units and fixture schedule. All fixtures shall be UL listed.
4. Lighting plans are diagrammatic, with fixture outlets located approximately to scale but not dimensioned. Raceways are not generally shown. The Installer shall check lighting drawings against field conditions and the drawings of other disciplines for interferences and shall select and lay out locations for outlets and obtain approval for final locations from Engineer.
5. Fixtures to be installed in wet, damp, moist, corrosive or outdoor locations will be acceptable only when designed and manufactured specifically for outdoor, rugged, weatherproof services. Each part, component, nut, bolt, rivet and spring shall be made of materials of effective corrosion resistance or have been subjected to finishing treatment which will assure such resistance. Fixtures shall be certified by manufacturer for intended purpose.

Materials:

The materials for this work shall conform to the following requirements:

1.1 SUBMITTALS:

A. Submit the following in accordance with Form 816 Article 1.20 – 1.05.02.

B. Product Data: Include photometric curves, illustrations, specifications, schedules and material lists with quantities showing complete details of all proposed equipment.

1. Spare Parts: Include name, address, and telephone number of in-state supplier of spare parts. No out-of-state suppliers shall be permitted.

C. Contract plans indicate the basis of design light fixtures. If the bidder chooses to provide another manufacturer, a complete photometric lighting analysis showing all the illuminance levels, uniformity, lamp loss factor, lamp depreciation, power densities, etc. shall be provided for review.

D. Maintenance Data: For interior lighting to include in the operation and maintenance manuals specified in Form 816 Article 1.20-1.08-14 subsection 2.

1.2 QUALITY ASSURANCE:

A. Comply with applicable local code requirements of the authority having jurisdiction and NEC Articles 225, 250, 410, and 501 as applicable to installation, and construction of exterior building lighting fixtures.

B. Comply with requirements of UL standards pertaining to exterior lighting fixtures. Provide exterior lighting fixtures and components which are UL-listed and labeled.

C. Comply with ANSI C2, "National Electrical Safety Code."

1.3 SEQUENCING AND SCHEDULING:

A. Coordinate with other work including conductors and cable, raceways and boxes, to properly interface installation of interior lighting fixtures with other work.

1.4 STORAGE AND HANDLING OF POLES:

A. General: Store poles on decay-resistant treated skids at least 1 ft above grade and vegetation. Support pole to prevent distortion and arrange to provide free air circulation.

B. Metal Poles: Retain factory-applied pole wrappings until just before pole installation. For poles with nonmetallic finishes, handle with web fabric straps.

1.5 SPARE PARTS:

A. Furnish to the Engineer spare parts described below that match products installed and that are packaged with protective covering for storage and identified with labels describing contents.

1. 2 LED modules per fixture type.
2. 1 LED driver per fixture type

1.6 WARRANTIES:

A. Refer to Form 816 Article 1.20-1.06.08 and for additional information.

B. Warranty period: 5 years from the issuance of Certificate of Compliance for LED fixture, factory-installed electrical component system; a minimum of two years for other luminaire components. The warranty shall cover both parts and labor for the complete warranty period.

C. Replace defective and burned out light bars or drivers for a period of 5 years following the date of Certificate of Compliance.

2.1 MANUFACTURERS:

A. Available Manufacturers: Subject to compliance with CDOT Maintenance requirements, lighting manufacturers offering products that may be incorporated in the work are the following or an approved equal:

1. Beacon
2. Holophane
3. Kim

2.2 MATERIALS:

A. General: Lighting fixtures (luminaires) shall be complete with drivers, mounting brackets and hardware, LED lamps, installation accessories, fixture wire, and all accessories as required, as specified in the Fixture Schedule, as shown on the Contract plans and as required by NEC.

B. Refractors and Reflectors: All glassware and plastic shall be uniform, free from defects and photometrically tested for distribution by an independent testing laboratory. Plastic diffusers shall be of new virgin-acrylic plastic material. Designer reserves the right to review photometric test.

C. Conduits: Conduit, including hangers and fittings, shall be installed where shown on the Contract plans and shall be in accordance with Form 816.

D. Heavy Duty Wall Mounted LED Wallpack Luminaire (Fixture Types “WM3 & WM4”).

1. Housing: Low copper die cast aluminum
2. Optics: Full cutoff
3. Light Distribution: Type 3 and 4
4. Wiring: Standard recessed box and conduit
5. Paint: powder paint 3 mils thickness - black
6. UL Listing: Suitable for “wet location”,
7. 5000k CCT
8. 55 watt
9. On board surge protection
10. Minimum 5100 lumens.
11. Construction:

    a. Evenly distributed uniformity.
    b. Wear-resistant gaskets for access panel and lens.

E. Recessed Stair and Walkway Luminare, LED. (Fixture Type “SL-1”)

1. Housing: Die cast aluminum stainless steel hardware
2. UL Listing: Suitable for “Wet location”.
3. Mounting: flush mounted fully recessed
4. Light Distribution: Stair / Walkway
5. Paint: powder paint 3 mils thickness - black
6. 4000k CCT
7. .125” tempered glass faceplate
8. 5.6 watts
9. Minimum 155 lumens.

F. Pole Mounted Single and Double Head LED Luminare (Fixture Types “A-3, A-4, A2-3, AU3, UU23”). This item shall consist of furnishing and installing a light emitting diode (LED) luminaire of the wattage, distribution, and voltage as specified, completely wired and attached to the arm or bracket of the pole in accordance with the plans and specifications.

1. The housing of the luminaire shall be die cast aluminum with a maximum effective projected area (EPA) of less than 1.0 square feet. The LED luminaire shall be UL 1572 listed for wet locations. The luminaire shall carry a 3G vibration rating. The die-cast aluminum door frame shall feature integral hinges for tool-less entry. The housing shall feature standard black powder coat paint with a 2.5 mil nominal paint thickness. The fixture shall be designed to mount on 2” IP (2.375” O.D.) horizontal tenon and be adjustable +/- 5° to allow for fixture leveling. The luminaire shall provide a two bolt/one bracket slipfitter with cast-in pipe stop and leveling steps. A fixed-in-place bird guard shall seal around the 2” mounting arm.

2. LED optics shall consist of sealed LED. The luminaire optics shall provide warm white light at a standard 5000K CCT with no sacrifice in lumen output. The LEDs shall operate at a drive current of 700mA. The luminaire shall provide an initial delivered lumen output of 5100 lumens or greater, and shall provide an IESNA type II and type III distribution as noted on plans. Minimum 88,000 hours lumen maintenance of 96% at 25C ambient based on absolute photometry. Aluminum heat sinks shall incorporate both conduction and natural convection to transfer heat rapidly away from the LED source.

3. The LED luminaire shall operate at 120 volts and shall draw approximately 55 watts or less. The LED luminaire shall be provided with integral 10kV surge suppression protection. The electrical components shall have a quick disconnect harness. The LED luminaire shall be suitable for temperature operation from -22°F to 104°F.

4. The LED luminaire shall carry a limited 5 year warranty on the LEDs and the Driver.

5. Construction Method: The LED luminaire shall be installed at the end of the bracket and shall be leveled, securely fastened, properly oriented, connected to the power supply conductors, cleaned, and ready for operation. Conductors shall be run from the terminal block in the luminaire to the distribution circuit in the parapet junction box. Fuses and fuse holders shall be installed in the parapet junction box.

2.2 FIXTURE SUPPORT COMPONENTS:

A. Wind-Load Strength: 90 mph and 1.3 gust factor for total support assembly, including pole, base, and anchorage, where used, to carry the fixtures, supports, and appurtenances at the indicated heights above grade without deflection or whipping.

B. Arm, Bracket, and Mount Materials: Finish black anodized.

C. Mountings, Fastenings, and Appurtenances:

1. Corrosion-resistant components compatible with the poles and fixtures that will not cause galvanic action at contact points. Provide mountings that will correctly position the luminaire to provide the indicated light distribution.
2. Type “WM” Wallpacks shall be wall mounted in locations shown on plans per manufacturer’s installation instructions.

D. Wind Rating: 90 MPH with 1.3 Gust Factor

E. Pole Shafts: As shown on the lighting schedule.

F. Transformer Bases: Aluminum box-type assembly placed under the pole and used for wiring access or as a breakaway device.

G. Aluminum Poles: 6063-T6 alloy. Pole base: 356 or A356 alloy

H. Metal Pole Grounding Provisions: Welded 1/2-inch threaded lug.

I. Finish: Black Anodized

J. Wind Rating: 90 MPH with 1.3 Gust Factor

K. Bolt Circle: Per Manufacturer’s Recommendation

L. Foundation: Per plan detail. Bolt circle per pole manufacturer recommendation.

M. Anchor bolts: Galvanized “J” bolt, sized in accordance with pole manufacturer’s recommendation.

2.3 FINISH:

A. Metal Parts: Manufacturer's standard finish except as otherwise indicated. Finish applied over corrosion-resistant primer, free of streaks, runs, holidays, stains, blisters, and similar defects. Remove fixtures, and accessories showing evidence of corrosion or finish failure during Project warranty period and replace with new items.

B. Other Parts: Manufacturer's standard finish except as otherwise indicated.

Construction Methods:

3.1 EXAMINATION:

A. Examine areas and conditions under which lighting fixtures are to be installed, and substrate for supporting lighting fixtures. Notify Engineer in writing of conditions detrimental to proper completion of the work. Do not proceed with work until unsatisfactory conditions have been corrected in manner acceptable to Installer and with approval of Engineer.

3.2 INSTALLATION:

A. Install all luminaires, lamps and associated supports, fittings, conduit, boxes, wiring and grounding conductors as called for in this section, as shown on the plans, as required and in accordance with the manufacturer's instructions and recommendations.

B. Prior to the issuance of the Certificate of Compliance, thoroughly clean the luminaires, lamps and accessories and shall replace all lamps which were used for a period equivalent to 50 percent or more of their rated life, at no additional cost.

C. All fixtures shall be aligned and directed as shown or so as to illuminate the desired area properly. Fixtures shall be directly and rigidly mounted on their supporting structures using bolted connections. The conduit system shall not be used to support fixtures unless called for.

D. Fixtures shall be mounted plumb, level and in straight lines. Rows of fixtures shall be installed accurately as to line and level. Fastenings and supports shall be firmly set so that the fixtures will not be distorted by handling incident to normal maintenance. All parts including lamps shall be secured to prevent falling or dislocation.

E. Lighting fixtures shall be positioned to clear all obstructions.

F. All auxiliary steel, supports and brackets of all kinds for safety erecting the fixtures shall be furnished and installed in place by the Installer.

G. Where coordination with other equipment is necessary some departure from the locations shown may be permitted on approval of Engineer.

H. All lighting units when installed shall be set true and shall be free of leaks, warps, dents or other imperfections.

I. All lighting fixtures shall be directly grounded to the equipment grounding system by means of a conductor of size not less than that required by NEC. If insulated, the ground conductor insulation shall be colored green.

J. The Installer shall fill in circuit designations on the panelboard directory as soon as permanent connections are completed.

K. Taps and splices shall be made with insulated wire nut connectors of the setscrew or spring type or with indent compression type connectors. Solid wire shall be terminated at screw type connections by looping around the terminal screw. At panelboards, solid wire may be terminated using screw type pressure terminals; stranded wire may be terminated using saddle type pressure terminals.

3.3 GROUNDING:

A. Provide equipment grounding connections for interior lighting fixtures as indicated under Form 816.

3.4 FIELD QUALITY CONTROL:

A. The Installer is not responsible for the foot candles of illumination provided by the completed systems. However, if after the lighting is installed and in operation, any

areas are noted which are obviously under or overlit, the Installer shall promptly advise the Engineer.

B. Lamps furnished for temporary use during the construction period shall be similar to those shown on the fixture schedule. Fixtures shall be protected and maintained in good condition during construction. At the completion of the work, all fixtures shall be cleaned, inspected, and repaired, or replaced if damaged, and a complete set of new incandescent lamps shall be installed.

3.5 ADJUSTING AND CLEANING:

A. Clean lighting fixtures of dirt and construction debris upon completion of installation. Clean finger-prints and smudges from lenses.

B. Protect installed fixtures from damage during remainder of construction period.

C. Adjust aim-able fixtures to provide required light intensities.

Method of Measurement: Decorative Light Pole and Light Fixture, of the type specified, will be measured as Each installed and accepted in place.

Basis of Payment: Decorative Light Pole and Light Fixtures, of the type specified, will be paid for at the contract unit price Each, complete in place and accepted, which price shall include materials, equipment, tools and labor incidental thereto.

Pay Item	Pay Unit
ITEM #1003380A - DECORATIVE LIGHT POLE AND FIXTURE TYPE A3	Ea.
ITEM #1003382A - DECORATIVE LIGHT POLE AND FIXTURE TYPE A2-3	Ea.
ITEM #1003383A - DECORATIVE LIGHT POLE AND FIXTURE TYPE AU3	Ea.
ITEM #1003384A - DECORATIVE LIGHT POLE AND FIXTURE TYPE UU23	Ea.
ITEM #1003385A - DECORATIVE LIGHT FIXTURE TYPE WM3	Ea.
ITEM #1003386A - DECORATIVE LIGHT FIXTURE TYPE WM4	Ea.
ITEM #1003387A - DECORATIVE LIGHT FIXTURE TYPE SL1	Ea.

ITEM #1003906A - REMOVE LIGHT STANDARD

Description: Under this item the contractor shall remove an existing light standard with transformer base, bracket, luminaire, and ballast as indicated on the plans or as directed by the Engineer. Removed aluminum light standards, aluminum transformer bases, aluminum brackets, and luminaires, shall remain the property of the Department of Transportation. Removed steel light standards, steel transformer bases, lamps, and remote ballasts shall remain the property of the Contractor.

Materials: The Contractor shall be responsible for damage to all equipment and material incurred during removal and hauling to the specified area. All repairs or replacements due to damage or loss by the Contractor shall be made at the Contractor's expense.

Construction Methods: The Contractor shall remove a light standard, base, bracket, luminaire, and ballast, where required. Removed aluminum light standards with aluminum transformer bases, brackets, luminaires and ballasts, shall remain the property of the Department of Transportation. All steel light standards, steel transformer bases, lamps, and remote ballasts shall be disposed of by the Contractor.

The Contractor shall contact ConnDOT Stores (tel: 860-566-3263) to determine the storage facility where the salvageable materials are to be delivered. Contact shall be made with the Materials Storage Manager at least 24 hours in advance to coordinate unloading and storage. The Contractor shall load, transport, and unload the material. The material shall be stacked and stored according to the directions of the Materials Storage Manager. The condition of the material is to be determined by the State Inspector responsible for this project. Strict adherence to proper stores documentation, Directive 19 - "Transfer of Salvage Material from Project to Stores", is mandatory. Any material not meeting this criteria will be refused.

H.I.D. lamps which are to be disposed of by the Contractor, must be handled as hazardous waste, and be subject to the provisions of the Resources Conservation and Recovery Act (RCRA) Subtitle C and chapter 446 of the Connecticut General Statutes. The removed lamps shall not be landfilled or incinerated, but must be handled and disposed of, or recycled, at an approved facility.

Method of Measurement: This work will be measured for payment by the number of light standards with associated equipment removed and disposed of or delivered to the specified location, complete and accepted.

Basis of Payment: This work will be paid for at the contract unit price each for "Remove Light Standard" complete, which price shall include the removal of light standards with associated transformer bases, brackets, luminaires, lamps, cable and hardware, delivering, disposing, hauling, storing, and including all materials, tools, equipment, labor and work incidental thereto.

Pay Item	Pay Unit
Remove Light Standard	Each

ITEM #1003917A - REMOVE WOOD POLE

Description: Under this item the Contractor shall remove an existing wood pole with aerial cable as indicated on the plans or as directed by the Engineer. The wood pole, aerial cable, and associated hardware shall be disposed of by the Contractor.

Construction Methods: The Contractor shall remove a wood pole, with aerial cable and associated hardware where indicated on the plans or as directed by the Engineer. The removed materials shall be properly disposed of by the Contractor.

The resulting excavation shall be properly backfilled and seeded to match the surrounding grade.

Method of Measurement: This work will be measured for payment by the number of wood poles with associated equipment removed and disposed of, complete and accepted.

Basis of Payment: This work will be paid for at the contract unit price each for "Remove Wood Pole" complete, which price shall include removal of wood pole, aerial cable, and associated equipment, disposing, hauling, backfilling, seeding, and all materials, equipment, tools and labor incidental thereto.

Pay Item	Pay Unit
Remove Wood Pole	Each

ITEM #1006199A - UNDER DECK LIGHTING CONTACTOR

Description: Under this item The Contractor shall furnish and install the low voltage (600 volts and below) contactors as specified herein for parking lot lighting control and as shown on the contract drawings.

Materials:

Manufacturers shall be as listed below, or approved equal:

A. Eaton / Cutler-Hammer products
B. Square D
C. GE

The listing of specific manufacturers above does not imply acceptance of their products that do not meet the specified ratings, features and functions. Manufacturers listed above are not relieved from meeting these specifications in their entirety. Products in compliance with the specification and manufactured by others not named will be considered only if pre-approved by the Engineer ten (10) days prior to bid date.

Electrically-Held Lighting Contactors

1. The contactors shall be designed to withstand the large initial inrush currents of tungsten and ballast lamp loads as well as non-motor (resistive) loads without contact welding

2. Coils shall be permanently marked with voltage, frequency and part number

3. 30 ampere, 45 mm frame contactors shall be suitable for the addition of at least six (6) external auxiliary contacts of any arrangement normally open or normally closed

4. Contactors above 30 ampere rating shall be suitable for the addition of up to eight (8) external auxiliary contacts of any combination of normally open or normally closed contacts

5. Contacts shall be equipped with double break alloy contacts. The contactors shall have straight-through wiring

6. Line and load terminals for 10 to 30 amperes contactors shall have captive screws. Terminals above 30 amperes shall be back-out saddle clamp design

7. Combination units shall have a flange-mounted handle for NEMA Type 1, 3R, 4X or 12 enclosures. All enclosures shall have extra space to include or add modifications such as time clock, control power transformer, lightning arrester, or relays

8. Combination contactors enclosed in a NEMA Type 3R enclosure shall be UL-listed for service entrance

9. Pilot devices, where indicated, shall be oil tight, flange mounted and transformer-type for extended longer lamp life. Pilot device nameplates shall be engraved phenolic, black letters on white background, or aluminum

10. Combination type contactor operating mechanisms shall be flange-mounted and have positive, non-teasing (ON/OFF) action. The handle shall be color-coded: red for (ON) and black for (OFF)

11. Operating handle shall have provisions to lock the handle in the (OFF) position with a minimum of three (3) standard padlocks each having 1/4-inch diameter shackles

12. Where indicated, a disconnect switch with double break, rotary blades and quick-make/quick-break action shall be provided. Provide a removable line shield with test probe holes for inspection. Switch shall have readily visible blades in the open (OFF) position. Fusible disconnect switch (through 100 amperes) shall have built-in fuse pullers to provide easier fuse removal

13. Fusible disconnect switches shall be UL listed for 100,000 AIC at 480 volts when used with Class R fuses

14. Where indicated, a circuit breaker shall be provided. A manual push-to-trip button shall be provided to exercise the trip unit

15. Electrically-held lighting contactors NEMA rated for lighting loads up to 400-ampere, 180 mm frame shall be equal to Eaton / Cutler-Hammer type CN35 Class ECL03 for non-combination, Class ECL12 for fusible combination and Class ECL14 for circuit breaker combination units.30 ampere electrically-held contactors shall be Eaton / Cutler-Hammer type C20CN Class

16. 30 ampere rated contactor have finger safe terminals and normally open and normally closed poles shall be interchangeable where the installation of the pole on the contactor base determines if the pole is normally open or normally closed and not the pole itself. Contactor shall be field configurable from electrically held to mechanically held.

17. Enclosures shall be NEMA 3R

18. Standard factory tests shall be performed on the equipment provided under this section. All tests shall be in accordance with the latest version of NEMA and UL standards.

Construction Methods: The Contractor shall install all equipment per the manufacturer's recommendations and the plans.

All necessary hardware to secure the assembly in place shall be provided by the Contractor.

Method of Measurement: This work will be measured for payment by the number of lighting contactors, each, complete and accepted.

Basis of Payment: This work will be paid for at the contract unit price each for "Lighting Contactor" complete in place, which price shall include all materials, tools, equipment, labor and work incidental thereto.

Pay Item	Pay Unit
Under Deck Lighting Contactor	Each

ITEM #1015034A - GROUNDING AND BONDING

10.15.01 Description: The work under this item shall consist of furnishing and installing the grounding and bonding systems at Site Nos. 1, and 2 as shown on the plans and as specified herein. The grounding and bonding systems shall meet the requirements of the National Electrical Code and the technical and safety recommendations of ANSI and IEEE.

The Contractor shall provide grounding and bonding for all new facilities as shown on the plans. Bonding and grounding of the steel superstructures shall be as per the plans and this specification.

Applicable Standards

Pertinent provisions of the following listed standards (latest edition) shall apply to the work of this Section, except as they may be modified herein, and are hereby made a part of this Specification to the extent required.

Organization	Number	Title
NFPA	70	National Electrical Code
NFPA	78	Lightning Protection Code
IEEE	81	Ground Resistance and Protection Gradients in the Earth, Recommended Guide for Measuring
IEEE	142	IEEE Recommended Practice for Grounding of Industrial and Commercial Power Systems
UL	467	Grounding and Equipment
ASTM	B8	Concentric lay-stranded copper conductors, hard, medium hard, or soft

10.15.02 Materials: Conductors for grounding, bonding and rail return cables shall be ASTM B8, Class B stranded annealed copper and sized as indicated on the plans.

Connectors and Clamps: Bolts, washers and stop nuts shall be of high-copper alloy, Everdur, Durium, Duronze or silicone bronze. Ferrous hardware will not be acceptable.

Ground wire shall be 4/0 AWG HD stranded copper conductor.

Ground rods shall be copper clad, ¾” diameter 10’ long, connected to ground cables with Cadweld welded electrical connections by Erico International Corporation or approved equal.

10.15.03 Construction Methods:

1 - Submittals:

Test Reports: Reports of all field tests shall be submitted to the Engineer as required by these specifications and referenced standards.

Certified copies of test results on cables and other materials supplied under this Section, as per relevant standards.

The Contractor shall submit shop drawings for the complete grounding and bonding systems which shall include product data for all components of this section, material/procurement specifications and other related information for each component.

2 - Methods:

The size and type of the ground conductor shall be as indicated on the plans. Conductor connections shall be made as shown on the plans or as noted in this specification.

The Contractor shall perform all trenching and backfilling required for the installation of the grounding and bonding systems. Trenching and backfilling shall be performed in accordance with the provisions of sub-article 10.01 of the Standard Specifications. The Contractor is responsible to coordinate with the utility owners including Metro-North Railroad to determine the location of any existing underground facilities that may exist in the areas requiring trenching and modify operations as necessary to avoid impacting the existing utilities.

The Contractor shall install the Ground Wire from the superstructure to a ground rod and continuing on to the nearest catenary support as shown on the plans. The layout of the ground wire shall meet the minimum offset and depth as shown in the trench detail included in this specification but the actual layout including the ground rod location shall be determined in the field by Metro-North Railroad and the Engineer. Ground rods shall be installed in the cable trench and the top of the installed rods shall be at the elevation of the grounding cable. Ground rods shall generally be located as close as practical to the superstructure being grounded. Trench requirements are included in the trench detail included in this specification. The Contractor shall secure the conductor to the ground rods using welded electrical connections. The Contractor shall fasten the ground wire to the catenary support and make the connection to the aerial ground wire in accordance with the details provided herein.

The work shall be arranged in such a manner that each part of the grounding system which is laid below finished grade shall be completed and inspected before backfilling is done. All precautions shall be taken to assure that no damage is done to the grounding and bonding conductors or connections during backfilling, compacting and concreting operations. Testing for ground resistance shall be performed in accordance with the requirements of this Specification before any finish surfacing is laid above the grounding and bonding conductors.

Ground tap connections from the equipment to the grounded structural members shall be provided, as required. All paint, scale, rust, oxidation, or other foreign material shall be thoroughly removed from the points of contact on all metal surfaces before any ground connections are made.

The Contractor shall perform field testing, continuing throughout the installation, and fully documented, with the following as a minimum:

Electrical resistance tests shall be made during installation to verify continuity of the grounding system.

Measure, record and report the ground resistance at each location where grounding system is installed. The required ground resistance of the completed system shall be 5 ohms or less. Corrective measures shall be taken by the Contractor to achieve the specified ground resistance.

Resistance-to-earth tests shall be witnessed by the Engineer and written results of these tests shall be submitted for evaluation.

For sites that are constructed in stages, the Contractor shall be responsible to install the grounding and bonding in stages to provide working grounding and bonding systems for the completed construction in the interim conditions.

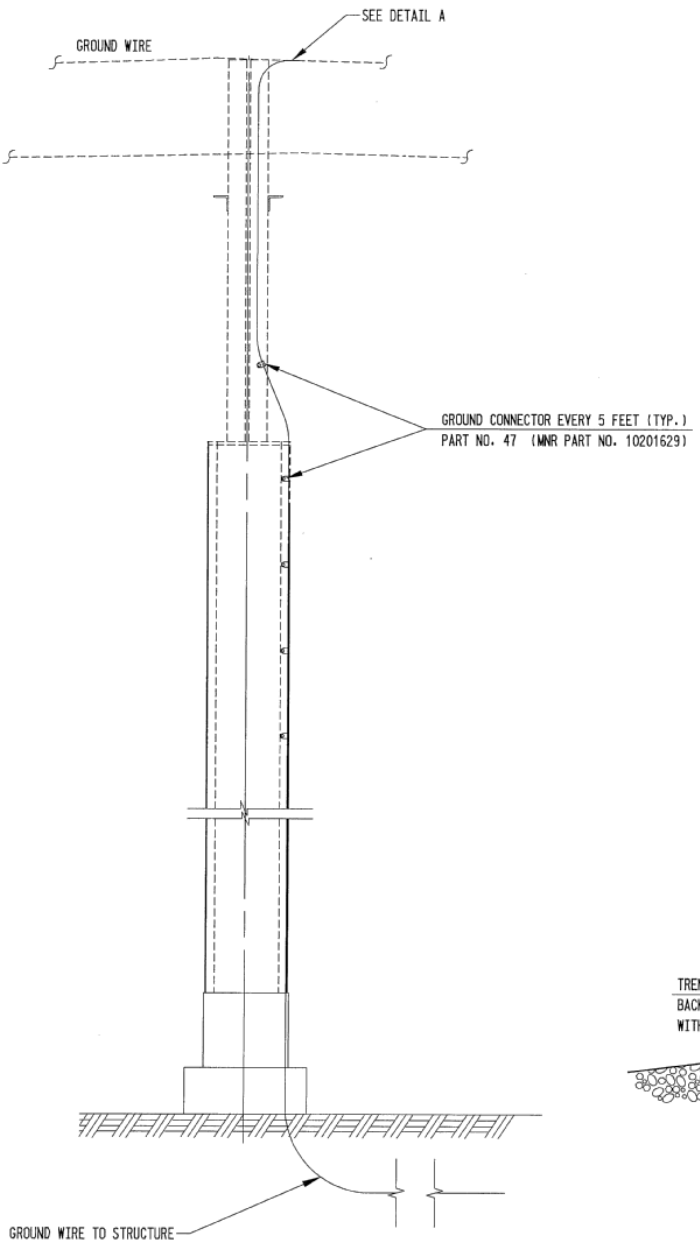

STRUCTURE GROUNDING WIRE AT POLE

N.T.S.

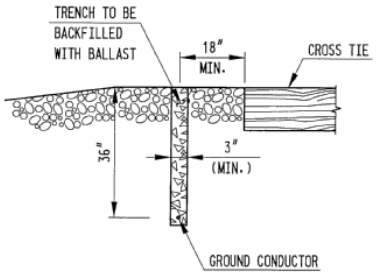

TYPICAL TRENCH SECTION

N.T.S.

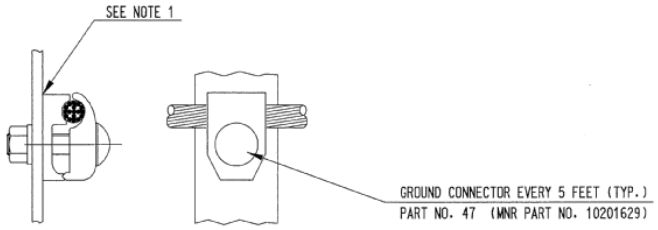

GROUND CONNECTOR

CABLE TO FLAT SURFACE
GROUND CONNECTOR

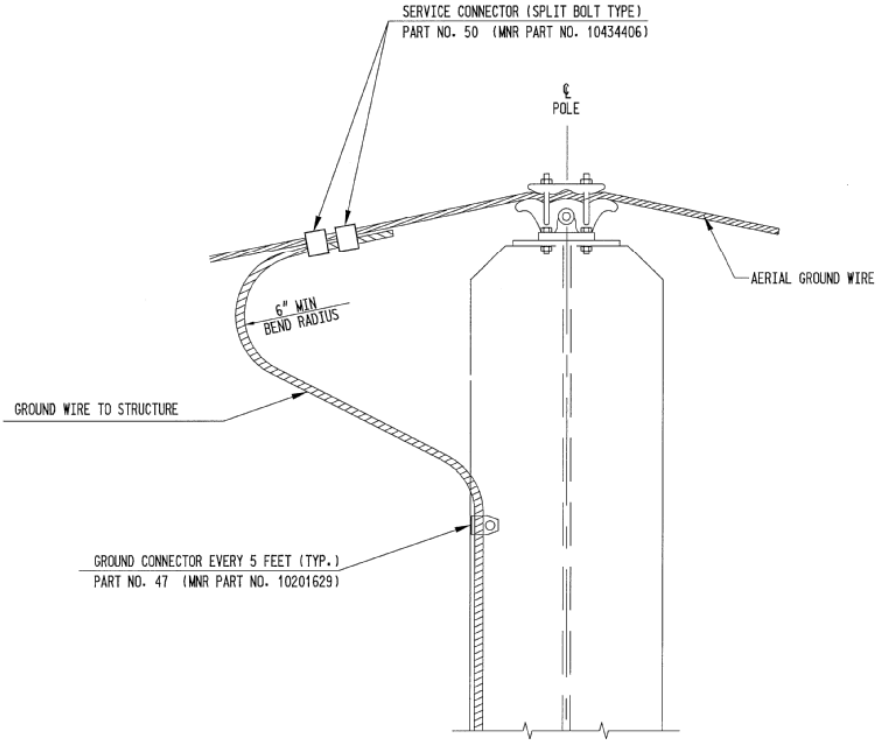

NOTES:

1. BEFORE INSTALLING THE GROUND CONNECTOR AND/OR GROUND WIRE CLAMP ASSEMBLIES ON THE EXISTING STRUCTURES, REMOVE ALL PAINT AND RUST FROM THE SURFACE UNDERNEATH AND APPLY CONDUCTIVE GREASE AS REQUIRED.

2. THE GROUND WIRE CLAMP ASSEMBLIES SHALL BE ABLE TO SUSTAIN RADIAL LOAD OF 7450 LB AND PRODUCE SLIP STRENGTH OF 3000 LBS.

DETAIL A

STRUCTURE GROUND WIRE TO
AERIAL GROUND WIRE

10.15.04 Method of Measurement: Grounding and Bonding, being paid for on a lump sum basis, will not be measured for payment. Contractor shall submit a schedule of values for Basis of Payment.

All trenching and backfilling required for the installation of the grounding and bonding systems at each site shall be considered incidental to this item and shall not be measured for payment.

10.15.05 Basis of Payment: This work will be paid for at the contract lump sum price for "Grounding and Bonding", which price shall include all submittals, testing, materials, tools, equipment and labor incidental thereto for all work under this item on project Site Nos. 1 and 2 including all trenching and backfilling.

Pay Item	Pay Unit
Grounding and Bonding	L.S.

ITEM #1016001A - PHOTO ELECTRIC CONTROL

Description: Under this item the contractor shall furnish and install photo electric control for parking lot and site lighting circuits.

Materials: Photo electric controls shall conform to the following requirements:

A. Mechanical

1. Photocell mounting shall be a twist lock type with a sealed control relay.

2. Photocell shall meet or exceed all requirements of ANSI C136.10- 2006 except as modified in this specification.

3. The housing shall be constructed of opaque, impact resistant and UV resistant material with an impact resistance of greater than 1.0 ft-lbs at -20°C.

4. The Photocell and housing shall be capable of withstanding a drop of 3 feet to a concrete floor without causing damage to the housing or damage to the electrical operation.

5. The exterior of the of the photocell shall be marked with the complete part number and manufacture (model description)

6. Photocell operating voltage and load range shall be clearly indicated on the exterior of the unit.

7. Shall be marked or labeled as required by UL or CSA as a listed or registered part.

B. Electrical

1. Photocells shall operate at a line voltage of 105 – 305 VAC @ 50/60 hertz.

2. They shall have a load rating of not less than 1800 VA.

3. Photocells shall have a set point of 0.8 ± 0.2 ftc.

4. The photocells shall turn off at 1.5 times greater than the turn on light level.

5. The photo sensor shall be a sealed silicon type.

6. Cadmium sulphide photo sensors are not acceptable.

7. Shall use the normally closed contacts on the control relay.

Construction Methods: The Contractor shall coordinate the location of the photo electric control with the Engineer. Photo electric control shall be located on the light standard nearest to the lighting contactor.

Method of Measurement: This work will be measured for payment by the number of photo electric controls, complete and accepted.

Basis of Payment: This work will be paid for at the contract unit price each for "Photo Electric Control" complete, which price shall include installation of the photo electric control and wiring to the lighting contactor, and including all materials, tools, equipment, labor and work incidental thereto.

Pay Item	Pay Unit
Photo Electric Control	Each

ITEM #1017050A – SERVICE RELOCATION

Description: Under this item the contractor shall relocate the existing Lower Lot electrical meter and load center as indicated on the plans or as directed by the Engineer.

Materials: The Contractor shall be responsible for damage to all equipment and material incurred during removal and relocation to the specified location. All repairs or replacements due to damage or loss by the Contractor shall be made at the Contractor's expense.

Construction Methods: The Contractor shall remove the existing pole-mounted electrical meter and load center and relocate to a new utility pole as indicated on the plans. The Contractor shall coordinate all required disconnects with Connecticut Light & Power (CL&P) and the Town of Greenwich. Mount relocated meter and load center per CL&P requirements. Provide proper grounding of all equipment.

Method of Measurement: This work will be measured for payment by the number of electric meter and load centers relocated (electric meter and load center combined shall be measured as one unit), complete and accepted.

Basis of Payment: This work will be paid for at the contract unit price each for "Relocate Electric Meter and Load Center" complete, which price shall include the removal of the electric meter and load center and installation on a new utility pole, including mounting and grounding and all required electrical connections, and including all materials, tools, equipment, labor and work incidental thereto.

Pay Item	Pay Unit
Service Relocation	Each

ITEM #1020030A - TEMPORARY ILLUMINATION UNIT

10.20.01 - DESCRIPTION: Under this item the Contractor shall furnish temporary illumination units for temporary lighting during construction, as directed by the Engineer. At the end of the project the temporary illumination unit shall become the property of the Contractor.

10.20.02 - MATERIALS:

The luminaire shall conform to the pertinent requirements of Article M.15.05, and shall be high pressure sodium. The luminaire wattage shall be 250 watt or as directed by the engineer. The ballast shall be under guarantee of the manufacturer for a period of one year commencing when the unit is installed and accepted.

10.20.03 - CONSTRUCTION METHOD: Upon completion of the project the temporary illumination unit shall be removed and shall remain the property of the Contractor.

10.20.04 - METHOD OF MEASUREMENT: This work will be measured for payment by the number of temporary illumination units installed and accepted.

10.20.05 - BASIS OF PAYMENT: This work will be paid for at the contract unit price each for "TEMPORARY ILLUMINATION UNIT" accepted by the engineer, complete in place, which price shall include all materials, anchors, guys, brackets, luminaires, lamps, ballasts, hardware, connections, hauling, and all equipment, tools, labor and all work incidental thereto including, removal, hauling, relocation, and disposal. The unit cost for this item is a one-time only cost. The cost of removing and relocating the temporary illumination unit shall be included in the unit cost.

Pay Item	Pay Unit
Temporary Illumination Unit	EA

ITEM #1206023A - REMOVAL AND RELOCATION OF EXISTING SIGNS

Section 12.06 is supplemented as follows:

12.06.01 – Description: Work under this item shall consist of the removal and/or relocation of designated side-mounted extruded aluminum and sheet aluminum signs, sign posts, sign supports, and foundations where indicated on the plans or as directed by the Engineer. Work under this item shall also include furnishing and installing new Town of Greenwich standard sign posts and associated hardware for signs designated for relocation.

12.06.02 – Materials: Sign post shall be Town of Greenwich standard sign posts: Telspar 10' long uprights 1.75"x1.75" (14 ga.) and 3' base 2"x2" (12 ga.) posts.

12.06.03 – Construction Methods: The Contractor shall take care during the removal and relocation of existing signs, sign posts, and sign supports that are to be relocated so that they are not damaged. Any material that is damaged shall be replaced by the Contractor at no cost to the State.

All state-owned sheet aluminum signs designated for removal are to be salvaged if they are in suitable condition as determined by the Engineer. All Town-owned sheet aluminum signs designated for removal are to be salvaged. The Contractor shall sort all salvaged sheet aluminum signs by size and owner and shall stack ten signs to a bundle. Each bundle shall be bound by tape or metal strap and the bundles shall be stacked on pallets.

The Contractor shall confirm intended delivery of the salvaged State-owned sheet aluminum signs at least seven days in advance and shall deliver the signs to the following address:

D.O.T. Sign Shop
1107 Cromwell Avenue
Rocky Hill, CT 06067
Attention: Jeffrey Adams (Phone # (860) 258-4675)

The Contractor shall confirm intended delivery of the salvaged town-owned sheet aluminum signs at least seven days in advance by contacting the Traffic Engineering Office at (203) 574-6820 and shall deliver the signs to the following address:

Town of Greenwich
Department of Public Works
Highway Division
101 Field Point Road
Greenwich, CT 06830

Extruded aluminum signs, sheet aluminum signs not suitable for salvage as determined by the Engineer, sign posts, and sign supports designated for removal shall be returned to the Department

for scrap. Scrap signs shall be cut to be no larger than 4' by 8' (1.2 m by 2.4 m). Scrap steel shall be separated from scrap aluminum and delivered to the Department. The Contractor shall confirm intended delivery of the scrap material at least seven days in advance and shall deliver the scrap material to the following address:

Connecticut Department of Transportation
Division of Purchasing and Materials Management
Stores Central Warehouse
660 Brook Street
Rocky Hill, CT 06067
Attention: Fred Connors (Phone # (860) 258-1976)

Foundations and other materials designated for removal shall be removed and disposed of by the Contractor as directed by the Engineer and in accordance with existing standards for Removal of Existing Signing.

Sheet aluminum signs designated for relocation are to be re-installed on new sign posts.

12.06.04 – Method of Measurement: Payment under Removal and Relocation of Existing Signs shall be at the contract lump sum price which shall include all extruded aluminum and sheet aluminum signs, sign posts, and sign supports designated for relocation, all new sign posts and associated hardware for signs designated for relocation, all sheet aluminum signs designated for salvage, all extruded aluminum signs, sheet aluminum signs, sign posts and sign supports designated for scrap, and foundations and other materials designated for removal and disposal, and all work and equipment required.

12.06.05 – Basis of Payment: This work will be paid for at the contract lump sum price for "Removal and Relocation of Existing Signs" which price shall include relocating designated extruded aluminum and sheet aluminum signs, sign posts, and sign supports, providing new posts and associated hardware for relocated signs, removing and disposing of foundations and other materials, and all equipment, material, tools and labor incidental thereto. This price shall also include removing, loading, transporting, and unloading of sheet aluminum signs designated for salvage and all equipment, material, tools and labor incidental thereto. This price shall also include removing, loading, transporting, and unloading of extruded aluminum signs, sheet aluminum signs not suitable for salvage, sign posts, and sign supports designated for scrap and all equipment, material, tools and labor incidental thereto.

Pay Item	**Pay Unit**
Removal and Relocation of Existing Signs	L.S.

ITEM #1210101A – 4" (100mm) WHITE EPOXY RESIN PAVEMENT MARKINGS

ITEM #1210102A – 4" (100mm) YELLOW EPOXY RESIN PAVEMENT MARKINGS

ITEM #1210105A – EPOXY RESIN PAVEMENT MARKINGS, SYMBOLS AND LEGENDS

SECTION 12.10 – EPOXY RESIN PAVEMENT MARKINGS, SYMBOLS AND LEGENDS is amended as follows:

*Delete "**SYMBOLS AND LEGENDS**" from the title of the special provision.*

12.10.03 – Construction Methods: Section is amended as follows:

*Delete the entire section titled "**WARRANTY**" under item number **3. Performance and Warranty.***

It was determined by the Office of Construction that the *First Year* warranty requirement is not necessary because early test results generally depict the outcome of pavement markings.

ITEM #1220013A – CONSTRUCTION SIGNS - BRIGHT FLUORESCENT SHEETING

Article 12.20.01 – Description: The Contractor shall furnish construction signs with bright fluorescent sheeting and their required portable supports or metal sign posts that conform to the requirements of NCHRP Report 350 (TL-3). The construction signs and their required portable supports or metal sign posts shall conform to the signing requirements stated in Article 9.71 "Maintenance and Protection of Traffic", as shown on the plans and/or as directed by the Engineer.

Article 12.20.02 – Materials: Prior to using the construction signs and their portable supports, the Contractor shall submit to the Engineer a copy of the Letter of Acceptance issued by the FHWA to the manufacturer documenting that the devices (both sign and portable support tested together) conform to NCHRP Report 350 (TL-3).

Portable sign supports shall be designed and fabricated so as to prevent signs from being blown over or displaced by the wind from passing vehicles. Portable sign supports shall be approved by the Engineer before they are used. Mounting height of signs on portable sign supports shall be a minimum of 1 foot and a maximum of 2 feet, measured from the pavement to the bottom of the sign.

All sign faces shall be rigid and reflectorized. Sheet aluminum sign blanks shall conform to the requirements of Article M.18.13. Metal sign posts shall conform to the requirements of Article M.18.14. Application of reflective sheeting, legends, symbols, and borders shall conform to the requirements specified by the reflective sheeting manufacturer. Attachments shall be provided so that the signs can be firmly attached to the portable sign supports or metal posts without causing damage to the signs. A Materials Certificate and Certified Test Report conforming to Article 1.06.07 shall be required for the reflective sheeting.

The following types of construction signs shall not be used: mesh, non-rigid, roll-up, corrugated or waffle board types substrates, foam core and composite aluminum sign substrates.

Reflective sheeting shall conform to the following:
The fluorescent orange prismatic retroreflective sheeting shall consist of prismatic lenses formed in a transparent fluorescent orange synthetic resin, sealed, and backed with an aggressive pressure sensitive adhesive protected by a removable liner. The sheeting shall have a smooth surface.

Physical Properties:

A. Photometric - Coefficient of Retroreflection R_A

When the sheeting applied on test panels is measured in accordance with ASTM E 810, it shall have minimum coefficient of retroreflection values as shown in Table I. The rotation angle shall be as designated by the manufacturer for test purposes, the observation angles shall be 0.2 degrees and 0.5 degrees, the entrance angles (component B_1) shall be -4 degrees and +30 degrees.

TABLE I

Minimum Coefficient of Retroreflection R_A
Candelas per footcandle per square foot

Observation Angle (deg.)	Entrance Angle (deg.)	R_A Orange
0.2	- 4	200
0.2	+ 30	90
0.5	- 4	80
0.5	+ 30	50

The rotation shall be as designated by the manufacturer.

B. Daytime Color

Color shall conform to the requirements of Table II. Daytime color and maximum spectral radiance factor (peak reflectance) of sheeting mounted on test panels shall be determined instrumentally in accordance with ASTM E 991. The values shall be determined on a Hunter Lab Labscan 6000 0/45 Spectrocolorimeter with option CMR 559 (or approved equal 0/45 instrument with circumferential viewing illumination). Computations shall be done in accordance with ASTM E 308 for the 2 degree observer.

TABLE II

Color Specification Limits** (Daytime)

Color	1		2		3		4		Reflectance Limit Y (%)	
	X	Y	X	Y	X	Y	X	Y	MIN	MAX
Orange (new)	.583	.416	.523	.397	.560	.360	.631	.369	28	-
Orange (weathered)	.583	.416	.523	.397	.560	.360	.631	.369	20	45

Maximum Spectral Radiance Factor, new: 110%, min.
weathered: 60%, min.

** The four pairs of chromaticity coordinates determine the acceptable color in terms of the CIE 1931 standard colorimetric system measured with standard illuminant D65.

C. Nighttime Color

Nighttime color of the sheeting applied to test panels shall be determined instrumentally in accordance with ASTM E 811 and calculated in the u', v' coordinate system in accordance with ASTM E 308. Sheeting shall be measured at 0.33 degrees observation and -4 degree entrance at rotation as determined by the manufacturer for test purposes. Color shall conform to the requirements of Table III.

TABLE III

Color Specification Limits ** (Nighttime)

Color	1		2		3		4	
	u'	v'	u'	v'	u'	v'	u'	v'
Orange (new and weathered)	.400	.540	.475	.529	.448	.522	.372	.534

D. Resistance to Accelerated Weathering

The retroreflective surface of the sheeting shall be weather resistant and show no appreciable cracking, blistering, crazing, or dimensional change after one year's unprotected outdoor exposure in south Florida, south-facing and inclined 45 degrees from the vertical, or after 1500 hours exposure in a xenon arc weatherometer in accordance with ASTM G26, Type B, Method A. Following exposure, panels shall be washed in a 5% HCL solution for 45 seconds, rinsed thoroughly with clean water, blotted with a soft clean cloth and brought to equilibrium at standard conditions. After cleaning, the coefficient of retroreflection shall be not less than 100 when measured as in D.2, below, and the color is expected to conform to the requirements of Tables II and III for weathered sheeting. The sample shall:

1. Show no appreciable evidence of cracking, scaling, pitting, blistering, edge lifting or curling or more than 0.031 inch shrinkage or expansion.

2. Be measured only at angles of 0.2 degrees observation, -4 degrees entrance, and rotation as determined by the manufacturer for test purposes. Where more than one panel of color is measured, the coefficient of retroreflection shall be the average of all determinations.

E. Impact Resistance

The retroreflective sheeting applied according to the manufacturer's recommendations to a test panel of alloy 6061-T6, 0.040 inch by 3 inches by 5 inches and conditioned for 24 hours, shall show no cracking outside the impact area when the face of the panel is subjected to an impact of 100 inch-pounds, using a weight with a 0.625 inch diameter rounded tip dropped from a height necessary to generate an impact of 100 inch-pounds, at test temperatures of both 32° F and 72° F.

F. Resistance to Heat

The retroreflective sheeting, applied to a test panel as in E., above, and conditioned for 24 hours, shall be measured in accordance with Paragraph A. at 0.2 degree observation and -4 degree entrance angles at rotation as determined by the manufacturer for test purposes and exposed to 170° ± 5° F for 24 hours in an air circulating oven. After heat exposure the sheeting shall retain a minimum of 70% of the original coefficient of retroreflection.

G. Field Performance:

Retroreflective sheeting processed and applied to sign blank materials in accordance with the sheeting manufacturer's recommendations, shall perform effectively for a minimum of 3 years. The retroreflective sheeting will be considered unsatisfactory if it has deteriorated due to natural causes to the extent that: (1) the sign is ineffective for its intended purpose when viewed from a moving vehicle under normal day and night driving conditions; or (2) the coefficient of retroreflection is less than 100 when measured at 0.2 degrees observation and -4 degree entrance. All measurements shall be made after sign cleaning according to the sheeting manufacturer's recommendations.

Article 12.20.03 – Construction Methods: Ineffective signs, as determined by the Engineer and in accordance with the ATSSA guidelines contained in "Quality Standards for Work Zone Traffic Control Devices", shall be replaced by the Contractor at no cost to the State.

Signs and their portable sign supports or metal posts that are no longer required shall be removed from the project and shall remain the property of the Contractor.

Article 12.20.04 – Method of Measurement: Construction Signs - Bright Fluorescent Sheeting will be measured for payment by the number of square feet of sign face. Sign supports will not be measured for payment.

Article 12.20.05 – Basis of Payment: "Construction Signs - Bright Fluorescent Sheeting" required and used on the project will be paid for at the Contact unit price per square foot. This price shall include the furnishing and maintenance of the signs, portable sign supports, metal sign posts and all hardware. Each sign and support or posts will be paid for once, regardless of the number of times it is used.

Pay Item	Pay Unit
Construction Signs – Bright Fluorescent Sheeting	S.F.

TABLE OF CONTENTS - CSI FORMAT SPECIFICATIONS SECTION

CSI #	SECTION TITLE & LOCATION
05 00 00	**Metals**
05 30 00	Metal Roof Deck
05 50 00	Metal Fabrications
07 00 00	**Thermal and Moisture Protection**
07 61 00	Sheet Metal Roofing
	1. Bemo Mechanically Attached Prefinished Aluminum Standing Seam Roofing System (0.050”) - includes snow retention system
07 62 00	Sheet Metal Flashing and Trim
	1. Aluminum gutters, downspouts, and drip edges
08 00 00	**Openings**
08 41 14	Aluminum Framed Storefronts
	1. Efco 4-1/2” Series 402
08 80 00	Glazing
	1. Viracon Architectural 9/16” Laminated Glass
08 87 55	Graffiti Resistant Glazing Films
	1. All windscreen glazing
09 00 00	**Finishes**
09 96 00	High Performance Coatings
	1. “Carboline” NEP coating on all exposed steel
10 00 00	**Specialties**
10 14 26	Panel Signage

12 00 00 **Furnishings**

12 93 43 Site Seating

1. Landscape Forms, Inc. : Modified Plexus II Collection

26 00 00 **Electrical**

26 05 00 Common Work Results for Electrical

26 05 10 Scope of Work

26 05 15 Electrical Demolition

26 05 19 Low-Voltage Electrical Power Conductors and Cables

26 05 26 Grounding and Bonding for Electrical Systems

26 05 29 Hangers and Supports for Electrical Systems

26 05 33 Raceway and Boxes for Electrical Systems

26 05 43 Underground Ducts and Raceways for Electrical Systems

26 05 48 Vibration and Seismic Controls for Electrical Systems

26 05 53 Identification for Electrical Systems

26 05 73 Overcurrent Protective Device Coordination Study

26 09 23 Lighting Control Devices

26 24 16 Panelboards

26 27 13 Electricity Metering

26 27 26 Wiring Devices

26 28 13 Fuses

26 28 16 Enclosed Switches and Circuit Breakers

26 33 23 Static Uninterruptible Power Supply

26 33 53 Central Battery Equipment (Inverters)

26 56 00 Exterior Lighting

27 00 00 **Communications**

27 00 00 Metro-North Telephone System

27 51 16 Public Address and Mass Notification Systems

TABLE OF CONTENTS

Project No. 301-0092

SECTION 053000 - METAL ROOF DECK

PART 1: GENERAL

1.1 SUMMARY

A. The requirements of this specification section include all materials, equipment, and labor necessary to furnish and install metal gage roof deck.

1.2 RELATED WORK

The following related work is not part of this specification section:

A. Structural Steel: Supplementary framing.

B. Roofing: Other than structural roof deck and accessories.

C. Painting: Preparation for and application of field painting.

D. Electrical: Attachments to roof deck.

1.3 SUBMITTALS

Submit the following items with the conditions of the contract and appropriate specification sections:

A. Submit the following in accordance with Form 816 Article 1.20-1.05.02

B. Product Data: the manufacturer's specifications, section properties, load tables, diaphragm shear tables, dimensions, and finishes shall be submitted.

C. Shop drawings shall be submitted showing panel placement, profiles, material thicknesses, finishes, layout, anchorage and openings as dimensioned on the structural drawings.

D. Calculations shall be submitted for review and approval to prove that the chosen section has the capacity to support loads all intended loads for the geometry shown on the plans. Design shall be done in accordance with the standards listed on the structural plans. All calculations shall be stamped and signed by a Professional Engineer registered in the State of Connecticut.

E. A full width sample shall be submitted as requested to verify compliance with the specifications and the level of quality.

1.4 REFERENCE STANDARDS

A. Section properties shall be computed in accordance with the American Iron and Steel Institute (AISI) Specification for Design of Cold-Formed Steel Structural Members.

B. Welding shall comply with the applicable provisions of the American Welding Society (AWS) D1.3 Structural Welding Code-Sheet Steel.

C. Superimposed load and diaphragm shear capacities shall be computed in accordance with the requirements of the Steel Deck Institute (SDI).

D. The manufacturer shall have been regularly engaged in the production of roof deck and ceiling systems with all of the required features for a period of at least ten years.

1.5 DELIVERY, STORAGE, AND HANDLING

A. The roof deck shall be protected from damage during delivery, storage, and handling.

B. If storage at the jobsite is required, roof deck shall be elevated above the ground, sloped to provide drainage, and protected from the weather with a ventilated covering.

1.6 WARRANTY:

A. Refer to Form 816 Article 1.20-1.06.08.

B. Warranty Period: Manufacturer's standard, but not less than 5-years from the issuance of the Certificate of Compliance.

PART 2: PRODUCTS

2.1 MANUFACTURER

A. In accordance with the requirements of this specification section, provide products manufactured by EPIC METALS CORPORATION, Rankin, PA. or equal.

B. The type roof deck, design thickness, and section properties shall be shown on the design drawings.

2.2 MATERIAL

A. The roof deck shall be cold-formed from steel coils conforming to ASTM A653, structural quality, with a minimum yield strength of 40 ksi.

B. Before forming, the steel coils shall have received a hot-dip protective coating of zinc conforming to ASTM A924, Class G90, as defined in ASTM A653.

C. The minimum uncoated thickness of the steel furnished shall not be less than 95% of the design thickness.

2.3 FABRICATION

A. The roof deck shall be cold-formed by the continuous roll forming process and resistance-welded together to form an integral cellular unit.

1. The roof deck shall have interlocking and vertically self-aligning sidelaps that present a flush appearance with tight fitting joints from the underside.

2. Shallow stiffening ribs shall be roll-formed into the bottom plates of roof deck. The ribs shall be located in the area between the webs to enhance flatness of the bottom plate.

3. After forming and welding, to insure all exposed welds are coated, the bottom surfaces of roof deck panels shall be prime painted with manufacturer’s standard white color at the factory. Before factory painting, the exposed galvanized steel panel shall be chemically cleaned, receive an acid wash pretreatment, followed by a coat of manufacturer’s standard white primer, and oven baked. Compatibility of the field applied finish paint with the factory applied prime paint shall be the responsibility of the painting contractor.

2.4 ACCESSORIES

A. The manufacturer's standard ridge plates, valley plates, transition plates, and closures shall be provided as indicated on the structural drawings.

B. Openings and reinforcement for openings noted specifically by the deck manufacturer on the structural drawings shall be provided.

PART 3: EXECUTION

3.1 GENERAL

A. The roof deck shall be installed in strict accordance with the manufacturer's instructions, approved erection drawings, and all applicable safety regulations.

3.2 BEFORE INSTALLATION

A. The supporting frame and other work relating to the roof deck shall be examined to determine if this work has been properly completed.

B. Bundles of material shall be located on the supporting frame in such a manner that overloading of any individual framing members does not occur.

C. All components of the roof deck shall be protected from significant damage during shipment and handling. If storage at the jobsite is required, bundles or packages of these materials shall be elevated above the ground, sloped to provide drainage, and protected from the elements with a ventilated, waterproof covering.

3.3 INSTALLATION

A. Before being permanently fastened, the roof deck shall be placed on the supporting frame and adjusted to final position with ends accurately aligned and adequately bearing on the supporting frame. Consistent coverage shall be maintained so that panels located in adjacent bays will be properly aligned.

B. Cutting of the roof deck to suit jobsite conditions shall be performed in a neat and professional manner. Only those openings indicated on the engineering drawings shall be cut. Other openings shall be cut and reinforced by those requiring the openings as approved by the engineer.

C. The roof deck shall be fastened to all supporting members with three 3/4" diameter puddle welds per 24" wide panel or as indicated on the manufacturer's erection drawings.

   1. The sides of roof deck located at the perimeter of the building shall be fastened to supporting members with 3/4" diameter puddle welds at a maximum spacing of 36" on center or less as indicated on the manufacturer's erection drawings.

D. The sidelaps of roof deck shall be fastened together with 3/8” x 1” long seam weld or with No. 12 screws at a maximum spacing of 36" on center or less as indicated on the manufacturer's erection drawings.

E. Construction loads shall not be applied to roof deck until after the panels are permanently fastened to supporting members, and sidelaps are attached. The construction loads shall not exceed the capacity of the panels.

F. Items such as ceilings, light fixtures, conduit, pipe and ductwork shall not be suspended from the roof deck without specific approval of the engineer.

G. Sump pans, ridge plates, valley plates, transition plates, eave plates, and supplied reinforcement for small openings shall be fastened as indicated on the manufacturer's erection drawings.

3.4 AFTER INSTALLATION

A. Construction loads that could damage the roof deck such as heavy concentrated loads and impact loads shall be avoided. Planking shall be used in all high traffic areas.

B. Galvanizing and other coatings that are damaged must be field repaired using appropriate methods and shall be the responsibility of the contractor.

C. Cleaning the bottom surface of the roof deck for field painting shall be the responsibility of the contractor.

END OF SECTION 053300

SECTION 055000 - METAL FABRICATIONS

PART 1 - GENERAL

1.1 SUMMARY

A. The work of this Section includes, but is not limited to, the following:

1. Miscellaneous framing and supports.
2. Platform Shelter framing.
3. Rough hardware.
4. Stair Nosings.
5. Panel Signage supports.
6. Stabilizing angles.
7. Hot dip galvanizing of miscellaneous metal materials.
8. Shop priming of miscellaneous metal materials.

1.2 QUALITY ASSURANCE

A. Reference Standards:

1. ASTM A-36: Specification for Structural Steel.
2. ASTM A-569: Specification for Steel, Carbon (0.15 maximum percent), Hot-rolled Sheet and Strip, Commercial Quality.
3. ASTM A-123: Specification for Zinc (hot - galvanized) Coatings on Products Fabricated From Rolled, Pressed, and Forged steel shapes, Plates, Bars and Strip.
4. ASTM A-143: Practice for Safeguarding against Embrittlement of Hot-Dip Galvanized Structural Steel Products and the Procedure for Detecting Embrittlement.

B. Engineer: Provide the services of a Professional Engineer, registered in the State of Connecticut to design and certify that the work of this section meets or exceeds the performance requirements specified in this section. Engineer shall be experienced in providing engineering services of the kind indicated that have resulted in the successful installation of metal fabrications similar in material, design, and extent to that indicated for this project.

1. Items requiring an Engineers certification include, but are not limited to, the following:

a. Miscellaneous bearing plates and lintels. See Steel Framing Drawings and Specifications.

D. Shop fabricate work to the greatest extent possible. Clearly label pieces in shop to facilitate field assembly.

E. Perform welding in compliance with American Welding Society Code.

F. Certifications:

1. Submit certification that the shop painting has been done in accordance with specifications.

2. Submit certificate of compliance from galvanizer.

3. Provide certification that welders to be employed in work meet the requirements of Article 6.03.03, section 6, subsection (a) of the Form 816.

1.3 SUBMITTALS

A. Submit the following in accordance with Form 816 Article 1.20-1.05.02.

B. Product Data: Submit manufacturer's product data, installation instructions, use limitations, and recommendations for each material used. Provide certifications stating that materials comply with requirements.

C. Shop Drawings: Provide large scale shop drawings for fabrication, installation and erection of all parts of the work. Provide plans, elevations, and details of anchorages, connections and accessory items. Provide installation templates for work installed by others.

D. Field Measurements: Take accurate field measurements before preparation of shop drawings and fabrication. Allow for field cutting and fitting where taking field measurements before fabrication is not possible. Do not field cut or fit items which have been hot-dip galvanized after fabrication.

E. Calculations: Provide professionally prepared calculations and certification of the performance of this work. Show how design load requirements and other performance criteria have been satisfied. Calculations shall be stamped and signed by a Professional Engineer registered in the State of Connecticut.

1.4 DELIVERY, STORAGE AND HANDLING

A. Refer to Form 816 Article 1.06.03 and Form 816 Article 1.20-1.06.03 for additional information.

B. All materials shall be carefully handled and stacked to prevent deformation or damage. All miscellaneous steel members shall be carefully stored on substantial timbers and blocking, so arranged that the steel will be free from the earth and properly drained, preventing any spattering or accumulation of water in or about the steel. Care shall be taken to prevent damage to the shop coat of paint and prevent the accumulation of mud dirt or other foreign matter on the steel. Such accumulation shall be completely removed prior to erection.

1.5 PROJECT CONDITIONS

A. Do not permit use of ladders, handrails, guardrails, counters or other work until work is completely and fully installed and ready to assume its intended design loads. Do not permit overloading of any miscellaneous metal system.

1.6 SOURCE QUALITY CONTROL

A. The registered engineer as referenced in Paragraph 1.4 B. above shall make periodic visits to the site to inspect and test as necessary the stair, handrail, and other metal work assemblies. After completion of the work and based on these inspections, an affidavit stamped with the seal of the engineer is to be issued. The affidavit shall state that the work has been installed in accordance with his/her design.

PART 2 - PRODUCTS

2.1 MATERIALS AND PRODUCTS

A. Steel Shapes: Steel shapes shall conform to the requirements of Standard Specifications for Structural Steel, ASTM A - 36. All necessary holes and sinkages shall be provided for attaching hardware or other items, and all anchorage for attachment to adjacent construction shall be included.

B. Steel Tubing: ASTM A500 or A501, hot or cold rolled.

C. Steel Sheet: ASTM A366, A570 or A611, of grade required for design loading.

D. Steel Pipe: ASTM A53, black schedule 40 for 3" diameter pipe and under and schedule 80 for pipe over 3" in diameter. Type and grade as required for design loading.

E. Iron Castings: ASTM A47 or A48, grade and class are manufacturer's option.

F. Grout: Pre-mixed, non-staining, non-corrosive, non-shrink, non-metallic cement based grout requiring only the addition of water. Grout shall exhibit shrinkage compensation characteristics in both the plastic and hardened states, and conform with ASTM C1107, "Grade C", CRD-C621-91, *Standard Specification for Packaged Dry Hydraulic Grout - Non Shrink*. One of the following grouts, or approved equal, may be used:

1. "Five Star Grout 100 by Five Star Products Inc."
2. "SikaGrout 212 as manufactured by Sika Corporation."
3. "Masterflow 928 by Master Builders, Inc.

G. Bolts and Fasteners: ASTM A307 and other types as appropriate and approved by Designer.

H. Concrete: Comply with requirements of Section 03 30 00 - Cast-In-Place Concrete.

I. Field Painting: Surface preparation and field painting shall be as specified in Section 099100.

J. Aluminum Specs: Provide alloy and temper recommended by aluminum producer or finisher for the type of use and finish indicated:

1. Extruded bar and shapes: ASTM B 221, 6061-T6, 6063-T6.
2. Extruded pipe and tube: ASTM B 429, 6063-T6.
3. Drawn Seamless tube: ASTM B 483, 6063-T832.
4. Plate and sheet: ASTM B209, 3003-H14.

K. Expansion Fastening Systems: Expansion bolts shall be HILTI KWIK bolts or approved equal. Other acceptable manufacturers are Powers Fastening, Inc. or ITW Ramset/Redhead. Install bolts as recommended by manufacturer. Provide minimum 1/2 inch diameter bolts with 3-1/4 inch embedment unless otherwise indicated.

L. Adhesive Anchor Rod System: Adhesive anchor rod system shall be Hilti HY150, W.R. Meadows Rezi-weld LV, Five Star RS anchor Gel or approved equal, utilizing ASTM F 593 AISI 304 threaded stainless steel rods or approved equal. Preparation, drilling and installation shall be as recommended by manufacturer. Install rods as recommended by manufacturer. Unless otherwise indicated, provide adhesive anchor rod system for fastening support steel to concrete or precast concrete walls/panels and floors.

2.2 FABRICATION

A. General Fabrication: Fabricate work to be straight and true, plumb, level and square and to sizes, shapes, and profiles indicated on approved shop drawings. Ease exposed edges. Cut, reinforce, drill and tap metalwork as necessary for proper assembly and use.

1. Fabricate all miscellaneous metal supports, brackets, braces and the like required to fully complete the work of this project.

2. Coordinate miscellaneous metal requirements with other specification sections to ensure proper interface of various parts of the work.

3. Obtain loading requirements from suppliers of work to be supported and design and fabricate support systems with factor of safety of at least 6.

B. Work Exposed To View: Take special care in choosing materials that are smooth and free of blemishes such as pits, roller marks, trade names, scale and roughness. Fabricate work with uniform, hairline tight joints. Form welded joints and seams continuously and grind flush and smooth to be invisible after painting. For exposed fasteners, use hex head bolts or Phillips head machine screws.

C. Galvanizing: All steel to be installed in, on or to exterior portions of building, including bolts and washers, and all steel framing members at exterior soffits, lintels, shelf angles, stabilization angles, and ladders shall be coated by hot-dip process after fabrication in accordance with ASTM A - 123. All hot-dipped galvanized steel shall be inspected for compliance with ASTM A - 123 and shall be marked with a stamp that indicates the ASTM number and the number of ounces of zinc per square foot of steel. A notarized

certificate of compliance shall be required from the galvanizer. Zinc for galvanizing shall be applied by the hot-dip process, Deltagalv® by Duncan Galvanizing is listed as a reference standard for quality characteristics. The galvanizing bath shall contain high grade zinc and other earthly materials. Immediately before galvanizing, the steel shall be immersed in a bath of zinc ammonium chloride. The use of the wet kettle process is prohibited. Comply with ASTM A 123 for fabricated products and ASTM A 153 for hardware. Provide thickness of galvanizing specified in referenced standards. NOTE: All items of work noted or specified to be galvanized shall be galvanized after fabrication. Where size of assembly is to large for galvanizing, only these assemblies will be galvanized prior to fabrication.

1. Touch Up: Touch up damaged or abraded galvanized surfaces with ZRC Cold Galvanizing Compound as manufactured by ZRC products company, Zirp Cold Galvanizing Compound as manufactured by Duncan Industries, Brite Zinc as manufactured by Brite Products or approved equal.

D. Factory-Applied Primer Over Hot-Dip Galvanizing:

1. Factory-Applied Universal Primer: Provide factory-applied polyamide epoxy primer over specially prepared galvanized steel, 2.0 - 3.0 mils dry film thickness minimum.. Apply primer within 12 hours after galvanizing in a controlled environment meeting applicable environmental regulations, and as recommended by coating manufacturer. Epoxy primer shall be one of the following or approved equal:

   a. Tnemec 27 WB
   b. E.I. duPont Corlar 2.1-PR
   c. Hempel Epoxy 35480

E. Painting and Preparation of Non-Galvanized Steel Products:

1. Thoroughly clean all steel of all loose mill scale by SSPC SP 7 Brush Blast, power wire-brushing or sand blasting. Remove all rust, dirt weld flux, weld splatter and other foreign matter by wire brushing or scraping (power wire brushing if necessary). Grind smooth any sharp projections. Oil and grease deposits shall be removed by solvent.

2. All steel members, except galvanized items, after they are prepared, shall be painted before shipping. All surfaces shall be painted, except machine surfaces, surfaces which are to be welded and surfaces to be encased in concrete. Paint shall be applied thoroughly and evenly on the surfaces and worked into the joints and other open surfaces. Surfaces inaccessible after assembly shall be given two coats. Painting materials shall be as noted above in 2.2 D.1.

F. Lintel Fabrication: Fabricate lintels for openings and recesses in walls and partitions where shown and elsewhere as needed. Provide at least 8" bearing at each end, unless otherwise detailed. Weld together individual members of composite lintels made up of more than one member.

G. Bearing and Leveling Plate Fabrication: Design and fabricate plates for steel and wood members bearing on masonry or concrete that are not indicated or required on structural plans. Provide flat, uniform bearing areas of size and thickness required for loading conditions encountered. Use standard AISC and AITC design criteria. Drill plates as necessary to receive anchor bolts and for grouting access.

H. Rough Hardware: Provide standard and custom fabricated bolts, anchors, hangers, dowels and other miscellaneous metal items as needed to properly complete the work of the project.

I. Stabilizing Angles: All stabilizing angles shall be furnished and installed by Section 05 50 00 METAL FABRICATIONS, sizes as indicated on the structural plans. If stabilizing angles are not indicated on structural plans provide 4" x 4"x 6" long x 12 gauge steel angles at top of masonry partitions, 4 feet on center, staggered to resist lateral movement. Contractor is to provide details of the various conditions needed to meet project requirements.

J. Stair Nosing For Concrete Stairs: Provide abrasive nosings for casting into concrete. The base shall be heat treated extruded aluminum type 6063-T6. The abrasive filler shall consist of a mixture of aluminum oxide and silicon carbide granules in a n epoxy matrix locked into the extruded channels of the base. The abrasive ribs shall project a minimum of 1/16” above the extruded channels. Provide American Safety Tread type BF-311D with minimum width of 3 inches, height of 3/8 inch and 5/8 inch deep integral concealed anchors or approved equals from Safe-T-metal Company, Inc., Barry Pattern & Foundry Company, Inc. or Wooster Products Inc. Minimum thickness of casting shall be 3/8 inch. Two component stair nosing type XH-330 (3" wide) as manufactured by Balco Inc., Type WP3C as manufactured by Wooster Products Inc., Type TP-311 as manufactured by American Safety Tread Co., Inc. or approved equal. Provide nosing colors as selected by Designer from manufacturer's standards. Provide nosings in one piece from stringer to stringer. Where there is no stringer and end of nosing would be exposed to view, hold back nosing 3" from end of tread.

I. PIPE BOLLARDS

Fabricate steel pipe bollards from 8-inch (102 mm) standard black steel pipe, Schedule 80, unless otherwise indicated. Cap bollards with 1/4 inch (6.4 mm) minimum thickness steel base plate, or as otherwise indicated.

PART 3 - EXECUTION

3.1 INSTALLATION/ERECTION

A. Provide suitable anchors and fasteners to connect miscellaneous metal items to other construction. Provide setting templates and diagrams and coordinate with other work so that adequate anchor bolts, blocking and bracing is in place and accurately located. Beginning work means Installer accepts substrates and conditions.

B. Set work accurately and plumb, level and aligned. Make field assembly and connections with the same level of quality as shop fabricated work.

C. For bearing and leveling plates, clean concrete and masonry bearing surfaces and roughen to improve bond. Thoroughly clean steel bearing surfaces. Set loose plates on shims or wedges. Level and plumb work, then tighten anchor bolts. Cut off protruding shims and wedges and pack voids solidly with grout.

D. Adjust handrails and guardrails prior to final anchoring and grouting. Plumb posts in both directions. Provide 1-1/2" clearance from inside of handrails to face of walls. Provide wall brackets at spacing shown, or if not shown, at not more than 6'-0" on center. Securely anchor wall brackets into structure or very secure blocking. Connections shall withstand loading specified for handrails and guardrails.

E. Install bollards at locations shown on drawings. After installation, fill pipe with concrete and provide a smooth convex curve at the top of the pipe. Backfill in the annular space around bollards not embedded in poured footings shall be by the following methods:

1. Clean excess soil from hole. Do not leave loose soil at bottom of hole.

2. Backfill shall be of concrete with an ultimate strength of 3,000 pounds per square inch (210.92 kgs/sq cm) at 28 days. The hole shall not be less than four (4) inches (101.6 mm) larger than the diagonal dimension of a round, square or rectangular bollard.

3.2 TOLERANCES

A. The following allowable installed tolerances are allowable variations from locations and dimensions indicated by the Contract Document and shall not be added to allowable tolerances indicated for other work.

1. Allowable Variation from True Plumb: ± 1/8" in 20'-0"

2. Allowable Variation from True Level: ± 1/8" in 20'-0"

3. Allowable Variation from True Line: ± 1/8" in 20'-0"

3.3 REPAIRING, CLEANING, AND PROTECTION

A. Touch up damaged coatings and finishes to eliminate evidence of repair.

B. Repair minor damage to eliminate all evidence of repair. Remove and replace work which cannot be satisfactorily repaired.

END OF SECTION 055000

SECTION 076100 - SHEET METAL ROOFING

PART 1 – GENERAL

1.1 WORK INCLUDED

A. Furnish and install roofing panels, halters, fasteners, flashing, closures, snow retention system, and related accessories required for a complete roofing system as indicated on the contract documents.

1.2 QUALITY ASSURANCE

A. The Bemo USA Bemo-Roof system will serve as the minimum acceptable quality required, as manufactured by Bemo USA Corp., 3062 N. Maple Street., Mesa, AZ 85215-1115. 1-800-926-2366.

B. Manufacturer's Qualifications
   1. The manufacturer shall have had at least (5) five years experience in architectural and industrial roofing systems.

C. Installer Qualifications
   1. The installer shall have a minimum of (5) years experience of installation with structural field-formed concealed clip roofing systems.
   2. Manufacturer must train and certify the installer so as to provide a single source responsibility for this portion of the work.

1.3 REFERENCE LATEST EDITIONS OF PUBLICATIONS AND STANDARDS

A. Building Design Codes – Uplift, Live and Dead Loads
   1. ASCE 7-10 Minimum Loads for Buildings and Other Structures (ASCE 7-10) American Society of Civil Engineers (ASCE).

B. Reference Standards
   1. American Iron and Steel Institute (AISI), Specification for the Design of Cold-Formed Steel Structural Members (Current Edition)
   2. American Society for Testing and Materials (ASTM) (Current Edition)
      a. E1592 "Standard Test Method for Structural Performance of Sheet Metal Roof and Siding Systems by Uniform Static Air Pressure Difference.
      b. E283 Test Rate of Air Leakage through Exterior Windows, Curtain Wall, and Doors by Uniform Static Air Pressure Difference.

1.4 SUBMITTALS

A. Submit the following in accordance with Form 816 Article 1.20-1.05.02.

B. Provide the following:
   1. Submit the following Test Reports, certified by and Independent Testing Laboratory or an independent professional engineer, to verify that the proposed roofing will meet the performance requirements of this specification.
   2. a. ASTM E1592 "Standard Test Method for Structural Performance of Sheet Metal Roof and Siding Systems by Uniform Static Air Pressure Difference" test methods.
      b. Halter/Clip Fastener Pull-Out Tests and Calculations.
      c. UL 105 Classification Test Data and report number.
      d. Concentrated Load Test Data
      e. Air Infiltration (E283) and Water Penetration (E331) Test Results

C. With the Proposal
   1. Qualification and/or exceptions to the drawings and specifications.

D. Prior to Fabrication
   1. Submit complete shop drawings, catalog cuts, calculations with all details, roof plans, wall elevations and field installation notes clearly indicated. Drawings must be approved before fabrication can begin.
   2. Performance Requirements – Submit structural design calculations and test reports certified by a registered professional structural engineer licensed in the State of Connecticut to verify load – carrying capacities and thermal movement allowance of the panel system.
   3. Furnish certified laboratory test reports showing that the proposed system has been tested and conforms to applicable provisions specified herein.
   4. Samples and descriptive date:
      a. Roof panel: Full panel width, 12 inches long.
      b. System Clips/Halters: Two Required.
      c. Fasteners: Two of each type to be used with a statement identifying the intended use of each.
      d. Closure: One metal and one neoprene.
      e. Insulation: 12 inch square sample of specified thickness.
      f. Sealants: One sample of each type and statement identifying the intended use of each.

1.5 WARRANTY

A. Refer to Form 816 Article 1.20-1.06.08.

1. Warranty Period: Manufacturer's standard, but not less than 5-years from the issuance of the Certificate of Compliance.

B. Manufacturer's Weather-tight Warranty: Standard performance warranty provided by the manufacturer to warrant all panels, flashings, sealants, fasteners, and accessories against defective materials and/or workmanship for a period of twenty (20) years Manufacturer's Weather-Tightness standard warranty must accompany submittal package.

PART 2 – PRODUCTS

2.1 ACCEPTABLE MANUFACTURER

A. The Bemo USA Bemo-Roof Mechanically Seamed Roofing System as manufactured by: Bemo USA Corp., 3062 N. Maple Street., Mesa, AZ 85215-1115. 1-800-926-2366.

B. Acceptable alternate manufacturers (or equal), subject to compliance with specifications: Merchant & Evans; Centria; or Corus.

2.2 PRODUCT PERFORMANCE

A. The standing seam roof system shall be designed to safely resist the positive and negative loads as required for the location and type of project designed.

B. Structural-uniform uplift load capacity of the panel system shall be determined in accordance with the principles of ASTM E1592, "Standard Test Method for Structural Performance of Sheet Metal Roof and Siding Systems by Uniform Static Air Pressure Difference" as follows:

C. The Factor of Safety on the test results shall be 1.65 for the panel and clip/halter ultimate loads with no increase for wind.
   1. The Factor of Safety for fasteners shall be 3.0 for single fastener in each connection, 2.25 for 2 or more fasteners in each connection and 4.0 in masonry.
   2. Design uplift capacity for condition of gage, span or loading other than those tested may be determined by interpolation of test results.
   3. Deflection shall be I/180 for positive loading.

D. Water penetration of the panel assembly at 20psf pressure for 15 minutes shall have "no uncontrollable leakage" when tested in accordance with ASTM E331.

E. Air infiltration of panel assembly at 20psf pressure shall be no more that 0.02 cfm/sf of panel when tested in accordance with ASTM E283.

F. The panel system shall have a U.L. Class 105 rating.

G. Panels are to be fabricated full length (continuous) with absolutely no end lap conditions allowed. The manufacturing equipment must be owned and operated by the manufacturer.

H. Fasten the roofing panels to the structure through the use of concealed halters/clips which are designed to allow for up to and including a full 3-3/4" of panel movement without impeding the performance of the panel.

I. Curved panels, concave, convex or both are to be manufactured in one continuous panel length and curved without crimping or distorting the standing seam legs of the roof panels.

2.3 MATERIALS

A. Metal Roof panels are to be Bemo USA Bemo-Roof as manufactured by Bemo USA and installed by Bemo USA trained and Certified contractors. (Or equal)

1. Fabricate metal panels from a minimum of 0.040" thick aluminum alloy 3004-H-14 clad. Plain Mill Finish or stucco embossed.
2. Panels shall be a maximum of 16" wide (400mm) with a minimum vertical standing leg height of 2 ½".

B. Concealed Clips

1. Fasten standing seam roofing to Z-clip structure with specially designed and tested clips manufactured exclusively for the roofing system.
2. Clips/halters must be designed to allow the roofing materials free movement in either direction parallel to the standing leg of the panel.

C. Snow Retention System to be Bemo USA non-penetrating clamp and fence assembly manufactured from extruded aluminum components.

1. Acceptable Product: Bemo Xtreme Snow retention system as supplied by the Standing Seam Metal Roof System manufacturer, BEMO-USA, Mesa, AZ (or Designer equal subject to compliance with specifications).
2. The snow retention system will not be allowed to penetrate the standing seam metal roofing system. All attachments to the roof will be made to the standing seam and not hinder the thermal movement of the roof panels.
3. All components to be aluminum or stainless steel.
   a. Components
      1. Standing seam roof panel seam clamp.
         a. Seam Clamp: Aluminum.
      2. Snow Pipe, 1-3/8" diameter – Snow Pipe: Aluminum
      3. Snow Fence, Snow Fence: Aluminum

   b. Performance

1. The Snow retention System will perform to the following:
   The ultimate connection load of the seam clamp shall be min. 2,300 LBS, parallel (longitudinal) to the standing seam roof system.

4. Snow retention system will not be allowed to penetrate the roof panels.
   a. System must have been tested specifically with panel system.

E. All fasteners to be series 300 Stainless Steel fasteners appropriate for this application.

F. Bemo X-Treme - 40mil Ice and Water Underlayment as provided by Bemo USA.
   1. High temperature, split release, self adhering underlayment.

G. Finish
   1. Exterior Surface of Panels: Consisting of a nominal .2 mil primer and nominal .8 mil 70% polyvinylidene topcoat. The color will be selected from Bemo USA's standard color chart.
   a. The coating system must have been tested to and exhibited the minimum characteristics of the following ASTM test criteria:
      1. Specular Gloss (ASTM D-523 @ 60 degrees), Standard gloss of 20-30.
      2. Pencil Hardness (ASTM D-3363), HB-H
      3. Flexibility, T-Bend (ASTM D-4145), No cracking or tape removal of film at 1-T on painted aluminum and at 2-T on paint steel.
      4. Adhesion/Reverse Impact, (ASTM D-3359, D-2794), 1.5 times metal thickness with no loss of adhesion. No cracking or loss of adhesion.
      5. Abrasion/Falling Sand, (ASTM D-968), Liters to expose 5/32" of substrate-50.
      6. Acid Pollutants, (ASTM D-1308) 10% muriatic acid (15 min) no effect, 20% Sulfuric acid (15 min) no effect.
      7. Salt Spray Resistance 5% @ 95 degrees F (ASTM B-117). Passes 3,000 hrs on alum. And 1,000 hrs on coated steel.
      8. Humidity Resistance 100% @ 95 degrees F (ASTM D-2247). Passes 3,000 hrs on alum. And 1,000 hrs on coated steel.
      9. Weathering Tests (ASTM D-2244 South Florida Exposure, D-822 Color Retention, D-659 Chalk Resistance), Less than 5NBS units change, Passes 5,000 hrs., Rating of 8 min.

D. Flashing – All trim materials to be same gage and finish as specified for the

panel system.

E. Continuous applied weather seal to be installed during the manufacturing process of the panel system.

PART 3 – EXECUTION

3.1 DELIVERY AND STORAGE

A. Secure suitable facilities for storage and protection on site before delivery of materials.

3.2 INSPECTION

A. The installer shall examine the building to verify that the structure is ready for roofing installation.

B. Installer cannot proceed until all structural supports and/or substrates are satisfactorily installed in accordance with the drawings, specifications and applicable industry standards.

3.3 INSTALLATION

A. The manufacturer must train and certify the installer.

B. All attachments shall allow for thermal expansion and contraction of the roofing materials.

C. Install all panels in one continuous unbroken length for any length of 250’ or less.

D. Panels are to be mechanically seamed after installation in the field.

3.4 DAMAGED MATERIAL AND CLEANING

A. Replace any materials or components that are damaged beyond repair prior to completion.

B. Each area will be wiped down as it is completed.

END OF SECTION 076100

SECTION 076200 - SHEET METAL FLASHING AND TRIM

PART 1 - GENERAL

1.1 SUMMARY

A. This Section includes sheet metal flashing and trim in the following categories:

1. Roof-drainage systems (gutters & leaders).
2. Exposed trim and fasciae.
3. Copings.
4. Metal flashing.

1.2 PERFORMANCE REQUIREMENTS

A. General: Install sheet metal flashing and trim to withstand wind loads, structural movement, thermally induced movement, and exposure to weather without failing.

B. Fabricate and install flashings at roof edges to comply with recommendations of FM Loss Prevention Data Sheet 1-49 for the following wind zone:

1. Wind Zone 2: Wind pressures of 31 to 45 psf (1.48 to 2.15 kPa).

1.3 SUBMITTALS

A. Submit the following in accordance with Form 816 Article 1.20-1.05.02.

B. Quality Assurance Submittals:

1. Product Data including manufacturer's material and finish data, installation instructions, and general recommendations for each specified flashing material and fabricated product.

2. Shop Drawings of each item specified showing layout, profiles, methods of joining, and anchorage details.

3. Samples of sheet metal flashing, trim, and accessory items, in the specified finish. Where finish involves normal color and texture variations, include Sample sets composed of 2 or more units showing the full range of variations expected.
   a. 8-inch- (200-mm-) square Samples of specified sheet materials to be exposed as finished surfaces.

b. 12-inch- (300-mm-) long Samples of factory-fabricated products exposed as finished Work. Provide complete with specified factory finish.

4. Qualification data for firms and persons specified in the "Quality Assurance" Article to demonstrate their capabilities and experience. Include lists of completed projects with project names and addresses, names and addresses of Designers and ConnDOTs, and other information specified.

1.4 QUALITY ASSURANCE

A. Installer Qualifications: Engage an experience Installer who has completed sheet metal flashing and trim work similar in material, design, and extent to that indicated for this Project and with a record of successful in-service performance.

B. Mockups: Prior to installing sheet metal flashing and trim, construct mockups indicated to verify selections made under Sample submittals and to demonstrate aesthetic effects as well as qualities of materials and execution. Build mockups to comply with the following requirements, using materials indicated for final unit of Work.

1. Locate mockups on-site in the location and of the size indicated or, if not indicated, as directed by Designer.
2. Notify Designer one week in advance of the dates and times when mockups will be constructed.
3. Demonstrate the proposed range of aesthetic effects and workmanship.
4. Construct mockups for the following type of sheet metal flashing and trim:

   a. Gutters and downspouts.
   b. Exposed trim and fasciae.
   c. Copings.

5. Obtain Designer's approval of mockups before start of final unit of Work.
6. Retain and maintain mockups during construction in an undisturbed condition as a standard for judging the completed Work.

   a. When directed, demolish and remove mockups from Project site.
   b. Approved mockups in an undisturbed condition at the time of Date of issuance of the certificate of compliance may become part of the completed Work.

1.5 PROJECT CONDITIONS

A. Coordinate Work of this Section with interfacing and adjoining Work for proper sequencing of each installation. Ensure best possible weather resistance, durability of Work, and protection of materials and finishes.

1.6 WARRANTY:

A. Refer to Form 816 Article 1.20-1.06.08.

B. Warranty Period: Manufacturer's standard, but not less than 5-years from the issuance of the Certificate of Compliance.

PART 2 - PRODUCTS

2.1 METALS

A. Aluminum: Alloy and temper recommended by aluminum producer and finisher for type of use and finish indicated and with not less than the strength and durability of alloy and temper designated below:

1. Factory-Painted Aluminum Sheet: ASTM B 209 (ASTM B 209M), 3003-H14, with a minimum thickness of 0.040 inch (1.0 mm), unless otherwise indicated.

2.2 MISCELLANEOUS MATERIALS AND ACCESSORIES

A. Fasteners: Same metal as sheet metal flashing or other noncorrosive metal as recommended by sheet metal manufacturer. Match finish of exposed heads with material being fastened.

B. Epoxy Seam Sealer: 2-part, noncorrosive, aluminum seam-cementing compound, recommended by aluminum manufacturer for exterior and interior nonmoving joints, including riveted joints.

C. Adhesives: Type recommended by flashing sheet metal manufacturer for waterproof and weather-resistant seaming and adhesive application of flashing sheet metal.

D. Metal Accessories: Provide sheet metal clips, straps, anchoring devices, and similar accessory units as required for installation of Work, matching or compatible with material being installed; noncorrosive; size and thickness required for performance.

E. Gutter Screen: 1/4-inch (6-mm) hardware cloth installed in sheet metal frames. Fabricate screen and frame of same basic material as gutters and downspouts.

F. Roofing Cement: ASTM D 4586, Type I, asbestos free, asphalt based.

2.3 FABRICATION, GENERAL

A. Sheet Metal Fabrication Standard: Fabricate sheet metal flashing and trim to comply with recommendations of SMACNA's "Architectural Sheet Metal Manual" that apply to the design, dimensions, metal, and other characteristics of the item indicated.

B. Comply with details shown to fabricate sheet metal flashing and trim that fit substrates and result in waterproof and weather-resistant performance once installed. Verify shapes and dimensions of surfaces to be covered before fabricating sheet metal.

C. Form exposed sheet metal Work that is without excessive oil canning, buckling, and tool marks and that is true to line and levels indicated, with exposed edges folded back to form hems.

D. Seams: Fabricate nonmoving seams in sheet metal with flat-lock seams. Tin edges to be seamed, form seams, and solder.

E. Seams: Fabricate nonmoving seams in aluminum with flat-lock seams. Form seams and seal with epoxy seam sealer. Rivet joints for additional strength.

F. Expansion Provisions: Space movement joints at maximum of 10 feet (3 m) with no joints allowed within 24 inches (610 mm) of corner or intersection.

Where lapped or bayonet-type expansion provisions in Work cannot be used or would not be sufficiently weatherproof and waterproof, form expansion joints of intermeshing hooked flanges, not less than 1 inch (25 mm) deep, filled with mastic sealant (concealed within joints).

G. Sealed Joints: Form nonexpansion, but movable, joints in metal to accommodate elastomeric sealant to comply with SMACNA standards.

H. Separate metal from noncompatible metal or corrosive substrates by coating concealed surfaces at locations of contact with asphalt mastic or other permanent separation as recommended by manufacturer.

I. Conceal fasteners and expansion provisions where possible. Exposed fasteners are not allowed on faces of sheet metal exposed to public view.

J. Fabricate cleats and attachment devices from same material as sheet metal component being anchored or from compatible, noncorrosive metal recommended by sheet metal manufacturer.

1. Size: As recommended by SMACNA manual or sheet metal manufacturer for application but never less than thickness of metal being secured.

2.4 SHEET METAL FABRICATIONS

A. General: Fabricate sheet metal items in thickness or weight needed to comply with performance requirements but not less than that listed below for each application and metal.

B. Gutters with Girth up to 15 Inches (380 mm): Fabricate from the following material:

1. Copper: 16 oz./sq. ft. (0.55 mm thick).
2. Lead-Coated Copper: 16 oz./sq. ft. (0.55 mm thick).
3. Aluminum: 0.0320 inch (0.8 mm) thick.
4. Galvanized Steel: 0.0217 inch (0.55 mm) thick.
5. Aluminum-Zinc Alloy-Coated Steel: 0.0217 inch (0.55 mm) thick.

C. Downspouts: Fabricate from the following material:

1. Copper: 16 oz./sq. ft. (0.55 mm thick).
2. Lead-Coated Copper: 16 oz./sq. ft. (0.55 mm thick).
3. Aluminum: 0.024 inch (0.6 mm) thick.
4. Galvanized Steel: 0.0217 inch (0.55 mm) thick.
5. Aluminum-Zinc Alloy-Coated Steel: 0.0217 inch (0.55 mm) thick.

D. Exposed Trim and Fasciae: Fabricate from the following material:

1. Copper: 20 oz./sq. ft. (0.7 mm thick).
2. Lead-Coated Copper: 20 oz./sq. ft. (0.7 mm thick).
3. Aluminum: 0.050 inch (1.2 mm) thick.
4. Galvanized Steel: 0.0276 inch (0.7 mm) thick.
5. Aluminum-Zinc Alloy-Coated Steel: 0.0276 inch (0.7 mm) thick.

E. Copings: Fabricate from the following material:

1. Copper: 24 oz./sq. ft. (0.82 mm thick).
2. Lead-Coated Copper: 24 oz./sq. ft. (0.82 mm thick).
3. Aluminum: 0.050 inch (1.2 mm) thick.
4. Galvanized Steel: 0.0396 inch (1.0 mm) thick.
5. Aluminum-Zinc Alloy-Coated Steel: 0.0396 inch (1.0 mm) thick.

F. Base Flashing: Fabricate from the following material:

1. Copper: 20 oz./sq. ft. (0.7 mm thick).
2. Lead-Coated Copper: 20 oz./sq. ft. (0.7 mm thick).
3. Aluminum: 0.040 inch (1.0 mm) thick.
4. Galvanized Steel: 0.0276 inch (0.7 mm) thick.
5. Aluminum-Zinc Alloy-Coated Steel: 0.0276 inch (0.7 mm) thick.

G. Counterflashing: Fabricate from the following material:

1. Copper: 16 oz./sq. ft. (0.55 mm thick).
2. Lead-Coated Copper: 16 oz./sq. ft. (0.55 mm thick).
3. Aluminum: 0.0320 inch (0.8 mm) thick.
4. Galvanized Steel: 0.0217 inch (0.55 mm) thick.
5. Aluminum-Zinc Alloy-Coated Steel: 0.0217 inch (0.55 mm) thick.

H. Flashing Receivers: Fabricate from the following material:

1. Copper: 16 oz./sq. ft. (0.55 mm thick).
2. Lead-Coated Copper: 16 oz./sq. ft. (0.55 mm thick).
3. Aluminum: 0.0320 inch (0.8 mm) thick.
4. Galvanized Steel: 0.0217 inch (0.55 mm) thick.
5. Aluminum-Zinc Alloy-Coated Steel: 0.0217 inch (0.55 mm) thick.

I. Drip Edges: Fabricate from the following material:

1. Copper: 16 oz./sq. ft. (0.55 mm thick).
2. Lead-Coated Copper: 16 oz./sq. ft. (0.55 mm thick).
3. Aluminum: 0.0320 inch (0.8 mm) thick.
4. Galvanized Steel: 0.0217 inch (0.55 mm) thick.
5. Aluminum-Zinc Alloy-Coated Steel: 0.0217 inch (0.55 mm) thick.

J. Eave Flashing: Fabricate from the following material:

1. Copper: 16 oz./sq. ft. (0.55 mm thick).
2. Lead-Coated Copper: 16 oz./sq. ft. (0.55 mm thick).
3. Aluminum: 0.0320 inch (0.8 mm) thick.

4. Galvanized Steel: 0.0217 inch (0.55 mm) thick.
5. Aluminum-Zinc Alloy-Coated Steel: 0.0217 inch (0.55 mm) thick.

2.7 ALUMINUM EXTRUSION FABRICATIONS

A. Aluminum Extrusion Units: Fabricate extruded-aluminum running units with formed or extruded-aluminum joint covers for installation behind main members where possible. Fabricate mitered and welded corner units.

2.8 ALUMINUM FINISHES

A. General: Comply with Aluminum Association's (AA) "Designation System for Aluminum Finishes" for finish designations and application recommendations.

B. High-Performance Organic Coating Finish: AA-C12C42R1x (Chemical Finish: cleaned with inhibited chemicals; Chemical Finish: acid chromate-fluoride-phosphate conversion coating; Organic Coating: as specified below). Prepare, pretreat, and apply coating to exposed metal surfaces to comply with coating and resin manufacturer's instructions.

1. Fluoropolymer 2-Coat Coating System: Manufacturer's standard 2-coat, thermocured system composed of specially formulated inhibitive primer and fluoropolymer color topcoat containing not less than 70 percent polyvinylidene fluoride resin by weight; complying with AAMA 605.2.

a. Color and Gloss: As indicated by manufacturer's color and gloss designations.
b. Color and Gloss: Match Designer's sample.
c. Color and Gloss: As selected by Designer from manufacturer's full range of choices for color and gloss.

PART 3 - EXECUTION

3.1 EXAMINATION

A. Examine substrates and conditions under which sheet metal flashing and trim are to be installed and verify that Work may properly commence. Do not proceed with installation until unsatisfactory conditions have been corrected.

3.2 INSTALLATION

A. General: Unless otherwise indicated, install sheet metal flashing and trim to comply with performance requirements, manufacturer's installation instructions, and SMACNA's "Architectural Sheet Metal Manual." Anchor units of Work securely in place by methods indicated, providing for thermal expansion of metal units; conceal fasteners where possible, and set units true to line and level as indicated. Install Work with laps, joints, and seams that will be permanently watertight and weatherproof.

B. Install exposed sheet metal Work that is without excessive oil canning, buckling, and tool marks and that is true to line and levels indicated, with exposed edges folded back to form hems. Install sheet metal flashing and trim to fit substrates and to result in waterproof and weather-resistant performance. Verify shapes and dimensions of surfaces to be covered before fabricating sheet metal.

C. Roof-Edge Flashings: Secure metal flashings at roof edges according to FM Loss Prevention Data Sheet 1-49 for specified wind zone.

D. Expansion Provisions: Provide for thermal expansion of exposed sheet metal Work. Space movement joints at maximum of 10 feet (3 m) with no joints allowed within 24 inches (610 mm) of corner or intersection. Where lapped or bayonet-type expansion provisions in Work cannot be used or would not be sufficiently weatherproof and waterproof, form expansion joints of intermeshing hooked flanges, not less than 1 inch (25 mm) deep, filled with mastic sealant (concealed within joints).

E. Soldered Joints: Clean surfaces to be soldered, removing oils and foreign matter. Pretin edges of sheets to be soldered to a width of 1-1/2 inches (38 mm), except where pretinned surface would show in finished Work.

1. Do not solder the following metals:

   a. Aluminum.
   b. Coil-coated galvanized steel sheet.

2. Pretinning is not required for the following metals:

   a. Lead.
   b. Lead-coated copper.
   c. Terne-coated stainless steel.

3. Do not use torches for soldering. Heat surfaces to receive solder and flow solder into joint. Fill joint completely. Completely remove flux and spatter from exposed surfaces.

F. Sealed Joints: Form nonexpansion, but movable, joints in metal to accommodate elastomeric sealant to comply with SMACNA standards. Fill joint with sealant and form metal to completely conceal sealant.

1. Use joint adhesive for nonmoving joints specified not to be soldered.

G. Seams: Fabricate nonmoving seams in sheet metal with flat-lock seams. Tin edges to be seamed, form seams, and solder.

H. Seams: Fabricate nonmoving seams in aluminum with flat-lock seams. Form seams and seal with epoxy seam sealer. Rivet joints for additional strength.

I. Separations: Separate metal from noncompatible metal or corrosive substrates by coating concealed surfaces, at locations of contact, with asphalt mastic or other permanent separation as recommended by manufacturer.

1. Underlayment: Where installing stainless steel or aluminum directly on cementitious or wood substrates, install a slip sheet of red-rosin paper and a course of polyethylene underlayment.
2. Bed flanges of Work in a thick coat of roofing cement where required for waterproof performance.

J. Counterflashings: Coordinate installation of counterflashings with installation of assemblies to be protected by counterflashing. Install counterflashings in reglets or receivers. Secure in a waterproof manner by means of snap-in installation and sealant, lead wedges and sealant, interlocking folded seam, or blind rivets and sealant. Lap counterflashing joints a minimum of 2 inches (50 mm) and bed with sealant.

K. Roof-Drainage System: Install drainage items fabricated from sheet metal, with straps, adhesives, and anchors recommended by SMACNA's Manual or the item manufacturer, to drain roof in the most efficient manner. Coordinate roof-drain flashing installation with roof-drainage system installation. Coordinate flashing and sheet metal items for steep-sloped roofs with roofing installation.

L. Install continuous gutter screens on gutters with noncorrosive fasteners, arranged as hinged units to swing open for cleaning gutters.

3.3 CLEANING AND PROTECTION

A. Clean exposed metal surfaces, removing substances that might cause corrosion of metal or deterioration of finishes.

B. Provide final protection and maintain conditions that ensure sheet metal flashing and trim Work during construction is without damage or deterioration other than natural weathering at the time of Date of issuance of the certificate of compliance.

END OF SECTION 076200

SECTION 084114 - ALUMINUM – FRAMED STOREFRONTS

PART 1 - GENERAL

1.1 Work Included

A. Furnish and install aluminum architectural storefront system complete with hardware and related components as shown on drawings and specified in this section.
B. All storefront systems shall be EFCO® System 402 Flush-Glazed Screw Spline Storefront, or equal. Acceptable alternative manufacturers: Wausau, Vistawall, Arch. Window.
   1. A sample storefront system (size and configuration) as per requirements of Designer.
   2. Test reports documenting compliance with requirements of Section 1.2.
C. Glass
   1. Reference Section 088000 for Glass and Glazing.
D. Grafitti Film
   1. Reference Section 088775 for Graffiti Film.
E. Single Source Requirement
   1. All products listed in Section 1.2 shall be by the same manufacturer.

1.2 Laboratory Testing and Performance Requirements

A. Provision for Thermal Movements
   1. Storefront framing systems shall be designed to provide for thermal movement of all component materials resulting from surface temperatures ranging from -20 degrees F to 180 degrees F without causing buckling, stresses on glass, failure of joint seals, undue stress on structural elements, damaging loads on fasteners, reduction of performance, or other detrimental effects.
B. Test Procedures and Performance
   1. Air Infiltration Test
      a. Test unit in accordance with ASTM E 283 at a static air pressure difference of 6.24 psf .
      b. Air infiltration shall not exceed .06 cfm/SF (.30 l/s•m²) of unit.
   2. Water Resistance Test
      a. Test unit in accordance with ASTM E 331.
      b. There shall be no uncontrolled water leakage at a static test pressure of 12.0 psf (575 Pa).
   3. Uniform Load Deflection Test
      a. Test in accordance with ASTM E 330.
      b. Deflection under design load shall not exceed L/175 of the clear span.
   4. Uniform Load Structural Test
      a. Test in accordance with ASTM E 330 at a pressure 1.5 times the design wind pressure in 1.05.B.3.b.
      b. At conclusion of the test, there shall be no glass breakage, permanent damage to fasteners, storefront parts, or any other damage that would cause the storefront to be defective.

C. Project Wind Loads
   1. The system shall be designed to withstand the following loads normal to the plane of the wall:
      a. Positive pressure of 32 psf at non-corner zones.
      b. Negative pressure of 34 psf at non-corner zones.
      c. Negative pressure of 41 psf at corner zones.

1.3 Field Testing and Performance Requirements

A. Test in accordance with AAMA 501.2 for spray test only or AAMA 503.92 for pressurized test.

1.4 Quality Assurance

A. Provide test reports from AAMA accredited laboratories certifying the performance as specified in 1.3.
B. Test reports shall be accompanied by the window manufacturer’s letter of certification stating that the tested window meets or exceeds the referenced criteria for the appropriate storefront type.

1.5 Submittals

A. Submit the following in accordance with Form 816 Article 1.20-1.05.02.
B. Drawings shall show scale elevations and sections. Full size sections shall be shown only when needed for clarity. Drawings shall show construction of all parts of the work, including metal and glass thickness, methods of joining, details of all field connections and anchorage, fastening and sealing methods, metal finishes and all pertinent information. Relationship to other work should be clearly indicated. No work shall be fabricated until shop drawings for that work have been finally approved for fabrication.
C. Contractor shall submit finish samples, test reports, and warranties.
   1. Samples of materials as may be requested without cost to owner, i.e., metal, glass, fasteners, anchors, frame sections, mullion section, corner section, etc.

1.6 Warranties

A. Refer to Form 816 Article 1.20-1.06.08.
   1. Warranty Period: Manufacturer's standard, but not less than 5-years from the issuance of the Certificate of Compliance.

B. Total Storefront System
   1. The Contractor shall assume full responsibility and warrant for one year the satisfactory performance of the total storefront installation. This includes the glass, glazing, anchorage and setting system, sealing, flashing, etc., as it relates to air, water, and structural adequacy as called for in the specifications and approved shop drawings.

2. Any deficiencies due to such elements not meeting the specifications shall be corrected by the Contractor at his expense during the warranty period.

PART 2 - PRODUCTS

2.1 Materials

A. Aluminum
   1. Extruded aluminum shall be 6063-T6 alloy and temper.
B. Glass
   1. Glass shall be 9/16" laminated.
C. Dissimilar Metals
   1. All dissimilar metals must be properly insulated to prevent galvanic action.
D. Fasteners
   1. All exposed fasteners shall be aluminum or stainless steel.

2.2 Fabrication

A. General
   1. All aluminum frame extrusions shall have a minimum wall thickness of .080" (2 mm).
   2. All exposed work shall be carefully matched to produce continuity of line and design with all joints. System design shall be such that raw edges will not be visible at joints.
B. Frame
   1. Depth of frame shall not be less than 4 1/2" (114 mm).
   2. Face dimension shall not be less than 2" (50 mm).
   3. Frame components shall be screw spline construction.
C. Glazing
   1. All units shall be “dry glazed" with recyclable EPDM gasket on both exterior and interior.
D. Finish
   1. Organic
      a. Finish all exposed areas of aluminum windows and components with 70% PVDF fluoropolymer Ultrapon or 50% PVDF fluoropolymer Ultraflur. Color shall be selected by Designer from the manufacturer’s selection of standard colors.

AA Description	Description	AAMA Guide Spec.
AA-M12-C42-R1X	70% PVDF Ultrapon™	2605-98
AA-M12-C42-R1X	50% PVDF Ultraflur™	2604-98

PART 3 - EXECUTION

3.1 Inspection

A. Job Conditions

1. Verify that openings are dimensionally within allowable tolerances, plumb, level, clean, provide a solid anchoring surface, and are in accordance with approved shop drawings.

3.2 Installation

A. Use only skilled tradesmen with work done in accordance with approved shop drawings and specifications.
B. Storefront system shall be erected plumb and true, in proper alignment and relation to established lines and grades.
C. Furnish and apply sealing materials to provide a weather tight installation at all joints and intersections and at opening perimeters.
E. Sealing materials specified shall be used in strict accordance with the manufacturer‘s printed instructions, and shall be applied only by mechanics specially trained or experienced in their use. All surfaces must be clean and free of foreign matter before applying sealing materials. Sealing compounds shall be tooled to fill the joint and provide a smooth finished surface.

3.3 Anchorage

A. Adequately anchor to maintain positions permanently when subjected to normal thermal movement, specified building movement, and specified wind loads.

3.4 Protection and Cleaning

A. The Contractor shall protect the aluminum materials and finish against damage from construction activities and harmful substances. The Contractor shall remove any protective coatings as directed by the Designer, and shall clean the aluminum surfaces as recommended for the type of finish applied.

END OF SECTION 084114

SECTION 088000 - GLAZING

PART 1 - GENERAL

1.1 SUMMARY

A. This Section includes glazing for the following products and applications, including those specified in other Sections where glazing requirements are specified by reference to this Section:
   1. Glazed safety glass windscreens.

1.2 DEFINITIONS

A. Manufacturers of Glass Products: Firms that produce primary glass, fabricated glass, or both, as defined in referenced glazing publications.

B. Glass Thicknesses: Indicated by thickness designations in millimeters according to ASTM C 1036.

C. Deterioration of Coated Glass: Defects developed from normal use that are attributed to the manufacturing process and not to causes other than glass breakage and practices for maintaining and cleaning coated glass contrary to manufacturer's written instructions. Defects include peeling, cracking, and other indications of deterioration in metallic coating.

D. Deterioration of Laminated Glass: Defects developed from normal use that are attributed to the manufacturing process and not to causes other than glass breakage and practices for maintaining and cleaning laminated glass contrary to manufacturer's written instructions. Defects include edge separation, delamination materially obstructing vision through glass, and blemishes exceeding those allowed by referenced laminated-glass standard.

1.3 PERFORMANCE REQUIREMENTS

A. General: Provide glazing systems capable of withstanding normal thermal movement and wind and impact loads (where applicable) without failure, including loss or glass breakage attributable to the following: defective manufacture, fabrication, and installation; failure of sealants or gaskets to remain watertight and airtight; deterioration of glazing materials; or other defects in construction.

B. Glass Design: Glass thickness designations indicated are minimums and are for detailing only. Confirm glass thicknesses by analyzing Project loads and in-

service conditions. Provide glass lites in the thickness designations indicated for various size openings, but not less than thicknesses and in strengths (annealed or heat treated) required to meet or exceed the following criteria:

1. Glass Thicknesses: Select minimum glass thicknesses to comply with ASTM E 1300, according to the following requirements:

   a. Design Wind Loads: Determine design wind loads applicable to Project from basic wind speed indicated in miles per hour at 33 feet above grade, according to ASCE 7, "Minimum Design Loads for Buildings and Other Structures": Section 6.5, "Method 2-Analytical Procedure," based on mean roof heights above grade indicated on Drawings.

      1) Basic Wind Speed: 110 mph.
      2) Importance Factor: II.
      3) Exposure Category: B.

   b. Probability of Breakage for Vertical Glazing: 8 lites per 1000 for lites set vertically or not more than 15 degrees off vertical and under wind action.

      1) Load Duration: 3 seconds.

   c. Maximum Lateral Deflection: For the following types of glass supported on all 4 edges, provide thickness required that limits center deflection at design wind pressure to 1/50 times the short side length or 1 inch, whichever is less.
      1) For laminated-glass lites.

   d. Minimum Glass Thickness for Exterior Lites: Not less than 6.0 mm.
   e. Thickness of Tinted and Heat-Absorbing Glass: Provide the same thickness for each tint color indicated throughout Project.

C. Thermal Movements: Provide glazing that allows for thermal movements resulting from the following maximum change (range) in ambient and surface temperatures acting on glass framing members and glazing components. Base engineering calculation on surface temperatures of materials due to both solar heat gain and nighttime-sky heat loss.

   1. Temperature Change (Range): 120 deg F, ambient; 180 deg F, material surfaces.

D. Thermal and Optical Performance Properties: Provide glass with performance properties specified based on manufacturer's published test data, as determined according to procedures indicated below:

1. For laminated-glass lites, properties are based on products of construction indicated.
2. Center-of-Glass Values: Based on using LBNL-44789 WINDOW 5.2 computer program for the following methodologies:

   a. U-Factors: NFRC 100 expressed as Btu/ sq. ft. x h x deg F.
   b. Solar Heat Gain Coefficient: NFRC 200.
   c. Solar Optical Properties: NFRC 300.

1.4 SUBMITTALS

A. Submit the following in accordance with Form 816 Article 1.20-1.05.02..

B. Product Data: For each glass product and glazing material indicated.

C. Samples: For the following products, in the form of 12-inch- square Samples for glass and of 12-inch- long Samples for sealants. Install sealant Samples between two strips of material representative in color of the adjoining framing system.

D. Samples: For the following products, in the form of 12-inch- square Samples for glass.

1. Factory tinted laminated (safety) glass.

E. Quality Assurance Submittals:

1. Product Certificates: Signed by manufacturers of glass and glazing products certifying that products furnished comply with requirements.
   a. For solar-control low-e-coated glass, provide documentation demonstrating that manufacturer of coated glass is certified by coating manufacturer.
2. Qualification Data: For installers.
3. Preconstruction Adhesion and Compatibility Test Report: From glazing sealant manufacturer indicating glazing sealants were tested for adhesion to glass and glazing channel substrates and for compatibility with glass and other glazing materials.
4. Product Test Reports: For each of the following types of glazing products: Tinted float glass.
   a. Coated float glass.
   b. Glazing sealants.
   c. Glazing gaskets.
5. Warranties: Special warranties specified in this Section.

1.5 QUALITY ASSURANCE

A. Installer Qualifications: An experienced installer who has completed glazing similar in material, design, and extent to that indicated for this Project; whose work has resulted in glass installations with a record of successful in-service performance; and who employs glass installers for this Project who are certified under the National Glass Association's Certified Glass Installer Program.

B. Source Limitations for Glass: Obtain the following through one source from a single manufacturer for each glass type: clear float glass, coated float glass, laminated glass and insulating glass.

C. Source Limitations for Glass Sputter-Coated with Solar-Control Low-E Coatings: Where solar-control low-e coatings of a primary glass manufacturer that has established a certified fabricator program is specified, obtain sputter-coated solar-control low-e-coated glass in fabricated units from a manufacturer that is certified by coated-glass manufacturer.

D. Source Limitations for Glazing Accessories: Obtain glazing accessories through one source from a single manufacturer for each product and installation method indicated.

E. Glass Product Testing: Obtain glass test results for product test reports in "Submittals" Article from a qualified testing agency based on testing glass products.

1. Glass Testing Agency Qualifications: An independent testing agency with the experience and capability to conduct the testing indicated, as documented according to ASTM E 548.
2. Glass Testing Agency Qualifications: An independent testing agency accredited according to the NFRC CAP 1 Certification Agency Program.

F. Elastomeric Glazing Sealant Product Testing: Obtain sealant test results for product test reports in "Submittals" Article from a qualified testing agency based on testing current sealant formulations within a 36-month period.

1. Sealant Testing Agency Qualifications: An independent testing agency qualified according to ASTM C 1021 to conduct the testing indicated, as documented according to ASTM E 548.
2. Test elastomeric glazing sealants for compliance with requirements specified by reference to ASTM C 920, and where applicable, to other standard test methods.

G. Preconstruction Adhesion and Compatibility Testing: Submit to elastomeric glazing sealant manufacturers, for testing indicated below, samples of each glazing material type, tape sealant, gasket, glazing accessory, and glass-framing member that will contact or affect elastomeric glazing sealants:

1. Use ASTM C 1087 to determine whether priming and other specific joint preparation techniques are required to obtain rapid, optimum adhesion of glazing sealants to glass, tape sealants, gaskets, and glazing channel substrates.
2. Submit not fewer than eight pieces of each type of material, including joint substrates, shims, joint-sealant backings, secondary seals, and miscellaneous materials.
3. Schedule sufficient time for testing and analyzing results to prevent delaying the Work.
4. For materials failing tests, obtain sealant manufacturer's written instructions for corrective measures, including the use of specially formulated primers.
5. Testing will not be required if elastomeric glazing sealant manufacturers submit data based on previous testing of current sealant products for adhesion to, and compatibility with, glazing materials matching those submitted.

H. Safety Glazing Products: Comply with testing requirements in 16 CFR 1201.

1. Subject to compliance with requirements, obtain safety glazing products permanently marked with certification label of the Safety Glazing Certification Council or another certification agency or manufacturer acceptable to authorities having jurisdiction.
2. Where glazing units, including Kind FT glass and laminated glass, are specified in Part 2 articles for glazing lites more than 9 sq. ft. in exposed surface area of one side, provide glazing products that comply with Category II materials, for lites 9 sq. ft. or less in exposed surface area of one side, provide glazing products that comply with Category I or II materials, except for hazardous locations where Category II materials are required by 16 CFR 1201 and regulations of authorities having jurisdiction.

I. Glazing Publications: Comply with published recommendations of glass product manufacturers and organizations below, unless more stringent requirements are indicated. Refer to these publications for glazing terms not otherwise defined in this Section or in referenced standards.

1. GANA Publications: GANA Laminated Division's "Laminated Glass Design Guide" and GANA's "Glazing Manual."

2. AAMA Publications: AAMA GDSG-1, "Glass Design for Sloped Glazing," and AAMA TIR-A7, "Sloped Glazing Guidelines."
3. IGMA Publication for Sloped Glazing: IGMA TB-3001, "Sloped Glazing Guidelines."
4. IGMA Publication for Insulating Glass: SIGMA TM-3000, "Glazing Guidelines for Sealed Insulating Glass Units."

J. Mockups: Build mockups to verify selections made under sample submittals and to demonstrate aesthetic effects and set quality standards for materials and execution.

1. Build mockups in the location and of the size indicated or, if not indicated, as directed by Designer.
2. Build glass mockups by installing the following kinds of glass in mockups specified in Division 8 Sections "Aluminum-Framed Entrances and Storefronts", and "Glazed Aluminum Curtain Walls" to match glazing systems required for Project, including glazing methods:

   a. Heat-strengthened coated glass.
   b. Fully tempered glass.
   c. Laminated glass.

3. Approved mockups may become part of the completed Work if undisturbed at time of Date of issuance of the certificate of compliance.

K. Preinstallation Meeting: Conduct meeting at Project site to comply with requirements in Form 816 Section "Project Management and Coordination."

1.6 DELIVERY, STORAGE, AND HANDLING

A. Protect glazing materials according to manufacturer's written instructions and as needed to prevent damage to glass and glazing materials from condensation, temperature changes, direct exposure to sun, or other causes.

B. For insulating-glass units that will be exposed to substantial altitude changes, comply with insulating-glass manufacturer's written recommendations for venting and sealing to avoid hermetic seal ruptures.

1.7 PROJECT CONDITIONS

A. Environmental Limitations: Do not proceed with glazing when ambient and substrate temperature conditions are outside limits permitted by glazing material manufacturers and when glazing channel substrates are wet from rain, frost, condensation, or other causes.

1. Do not install liquid glazing sealants when ambient and substrate temperature conditions are outside limits permitted by glazing sealant manufacturer or below 40 deg F .

1.8 WARRANTY

A. Refer to Form 816 Article 1.20-1.06.08..

1. Warranty Period: Manufacturer's standard, but not less than 5-years from the issuance of the Certificate of Compliance.

B. Manufacturer's Special Warranty for Coated-Glass Products: Manufacturer's standard form, made out to ConnDOT and signed by coated-glass manufacturer agreeing to replace coated-glass units that deteriorate as defined in "Definitions" Article, f.o.b. the nearest shipping point to Project site, within specified warranty period indicated below.

1. Warranty Period: 10 years from date of Manufacture.

C. Manufacturer's Special Warranty on Laminated Glass: Manufacturer's standard form, made out to ConnDOT and signed by laminated-glass manufacturer agreeing to replace laminated-glass units that deteriorate as defined in "Definitions" Article, f.o.b. the nearest shipping point to Project site, within specified warranty period indicated below.

1. Warranty Period: 10 years from date of Manufacture.

PART 2 - PRODUCTS

2.1 MANUFACTURERS

A. In other Part 2 articles where titles below introduce lists, the following requirements apply to product selection:

1. Available Products: Subject to compliance with requirements, products that may be incorporated into the Work include, but are not limited to, products specified.
2. Products: Subject to compliance with requirements, provide one of the products specified.
3. Product: Subject to compliance with requirements, provide product specified.
4. Available Manufacturers: Subject to compliance with requirements, manufacturers offering products that may be incorporated into the Work include, but are not limited to, manufacturers specified.

5. Manufacturers: Subject to compliance with requirements, provide products by one of the manufacturers specified.
6. Basis-of-Design Product: The design for each glazing product is based on the product named. Subject to compliance with requirements, provide either the named product or a comparable product by one of the other manufacturers specified.

2.2 GLASS PRODUCTS

A. Laminated Glass: ASTM C 1172, and complying with other requirements specified and with the following:

1. Interlayer: Polyvinyl butyral or cured resin of thickness indicated with a proven record of no tendency to bubble, discolor, or lose physical and mechanical properties after laminating glass lites and installation.

   a. For polyvinyl butyral interlayers, laminate lites in autoclave with heat plus pressure.
   b. For cured-resin interlayers, laminate lites with laminated-glass manufacturer's standard cast-in-place and cured-transparent-resin interlayer.

2. Laminating Process: Fabricate laminated glass to produce glass free of foreign substances and air or glass pockets.

2.3 GLAZING GASKETS

A. Dense Compression Gaskets: Molded or extruded gaskets of material indicated below, complying with standards referenced with name of elastomer indicated below, and of profile and hardness required to maintain watertight seal:

1. Neoprene, ASTM C 864.
2. EPDM, ASTM C 864.
3. Silicone, ASTM C 1115.
4. Thermoplastic polyolefin rubber, ASTM C 1115.
5. Any material indicated above.

B. Soft Compression Gaskets: Extruded or molded, closed-cell, integral-skinned gaskets of material indicated below; complying with ASTM C 509, Type II, black; and of profile and hardness required to maintain watertight seal:

1. Neoprene.
2. EPDM.
3. Silicone.

4. Thermoplastic polyolefin rubber.
5. Any material indicated above.

C. Lock-Strip Gaskets: Neoprene extrusions in size and shape indicated, fabricated into frames with molded corner units and zipper lock-strips, complying with ASTM C 542, black.

2.4 GLAZING SEALANTS

A. General: Provide products of type indicated, complying with the following requirements:

1. Compatibility: Select glazing sealants that are compatible with one another and with other materials they will contact, including glass products, seals of insulating-glass units, and glazing channel substrates, under conditions of service and application, as demonstrated by sealant manufacturer based on testing and field experience.
2. Suitability: Comply with sealant and glass manufacturers' written instructions for selecting glazing sealants suitable for applications indicated and for conditions existing at time of installation.
3. Colors of Exposed Glazing Sealants: As selected by Designer from manufacturer's full range.

B. Elastomeric Glazing Sealants: Comply with ASTM C 920 and other requirements indicated for each liquid-applied chemically curing sealant specified, including those referencing ASTM C 920 classifications for type, grade, class, and uses related to exposure and joint substrates.

1. Single-Component Neutral- and Basic-Curing Silicone Glazing Sealants, GS-01:

a. Products:
   1) Pecora Corporation; 864.
   2) Pecora Corporation; 890.
   3) Tremco; Spectrem 3.

b. Type and Grade: S (single component) and NS (nonsag).
c. Class: 50
d. Use Related to Exposure: NT (nontraffic).
e. Uses Related to Glazing Substrates: M, G, A, and, as applicable to glazing substrates indicated, O.

   1) Use O Glazing Substrates: Coated glass, color anodic aluminum, aluminum coated with a high-performance coating and wood.

f. Applications: Describe types of glazing applications where this sealant is required.

2. Neutral-Curing Silicone Glazing Sealants, GS-02:

a. Products:

1) Dow Corning Corporation; 791.
2) Dow Corning Corporation; 795.
3) GE Silicones; SilPruf NB SCS9000.
4) GE Silicones; UltraPruf II SCS2900.
5) Pecora Corporation; 865.
6) Pecora Corporation; 895.
7) Pecora Corporation; 898.

b. Type and Grade: S (single component) and NS (nonsag).
c. Class: 50.
d. Use Related to Exposure: NT (nontraffic).
e. Uses Related to Glazing Substrates: M, G, A, and, as applicable to glazing substrates indicated, O.

1) Use O Glazing Substrates: Coated glass, color anodic aluminum, aluminum coated with a high-performance coating and wood.

f. Applications: Describe types of glazing applications where this sealant is required.

3. Class 25 Neutral-Curing Silicone Glazing Sealants, GS-03:

a. Products:

1) Dow Corning Corporation; 799.
2) GE Silicones; UltraGlaze SSG4000.
3) GE Silicones; UltraGlaze SSG4000AC.
4) Tremco; Proglaze SG.
5) Tremco; Spectrem 2.
6) Tremco; Tremsil 600.

b. Type and Grade: S (single component) and NS (nonsag).
c. Class: 25.
d. Use Related to Exposure: NT (nontraffic).
e. Uses Related to Glazing Substrates: M, G, A, and, as applicable to glazing substrates indicated, O.

1) Use O Glazing Substrates: Coated glass, color anodic aluminum, aluminum coated with a high-performance coating and wood.
2) Applications: Describe types of glazing applications where this sealant is required.

4. Acid-Curing Silicone Glazing Sealants, GS-04:

a. Products:
1) GE Silicones; Construction SCS1200.
2) GE Silicones; Contractors SCS1000.
3) GE Silicones; Sanitary SCS1700.
4) Pecora Corporation; 860.
5) Tremco; Proglaze.
6) Tremco; Tremsil 200.

b. Type and Grade: S (single component) and NS (nonsag).
c. Class: 25.
d. Use Related to Exposure: NT (nontraffic).
e. Uses Related to Glazing Substrates: G, A, and, as applicable to glazing substrates indicated, O.

1) Use O Glazing Substrates: Coated glass, color anodic aluminum, aluminum coated with a high-performance coating and wood.

f. Applications: Describe types of glazing applications where this sealant is required.

2.5 MISCELLANEOUS GLAZING MATERIALS

A. General: Provide products of material, size, and shape complying with referenced glazing standard, requirements of manufacturers of glass and other glazing materials for application indicated, and with a proven record of compatibility with surfaces contacted in installation.

B. Cleaners, Primers, and Sealers: Types recommended by sealant or gasket manufacturer.

C. Setting Blocks: 100 % Silicone with a Shore, Type A durometer hardness of 85, plus or minus 5.

D. Spacers: Elastomeric blocks or continuous extrusions with a Shore, Type A durometer hardness required by glass manufacturer to maintain glass lites in place for installation indicated.

E. Edge Blocks: Elastomeric material of hardness needed to limit glass lateral movement (side walking).

F. Cylindrical Glazing Sealant Backing: ASTM C 1330, Type O (open-cell material), of size and density to control glazing sealant depth and otherwise produce optimum glazing sealant performance.

2.6 FABRICATION OF GLAZING UNITS

A. Fabricate glazing units in sizes required to glaze openings indicated for Project, with edge and face clearances, edge and surface conditions, and bite complying with written instructions of product manufacturer and referenced glazing publications, to comply with system performance requirements.

B. Clean-cut or flat-grind vertical edges of butt-glazed monolithic lites in a manner that produces square edges with slight kerfs at junctions with outdoor and indoor faces.

C. Grind smooth and polish exposed glass edges and corners.

1.

2.7 LAMINATED-GLASS UNITS

A. Heat-Treated Laminated-Glass Units, LG-01:

1. Manufacturers:

   a. Guardian Industries
   b. PPG Industries, Inc.
   c. Viracon

2. Outer Lite: Class 1 clear float glass.

   a. Kind FT (fully tempered).
   b. Thickness: 6.0 mm.

3. Inner Lite: Class 1 (clear) float glass.

   a. Kind FT (fully tempered).
   b. Thickness: 6.0 mm.

4. Plastic Interlayer:

a. Thickness: 0.060 inch, but not less than that required to comply as a Type II safety glass material.
b. Interlayer Color: Clear.

PART 3 - EXECUTION

3.1 EXAMINATION

A. Examine framing glazing, with Installer present, for compliance with the following:

1. Manufacturing and installation tolerances, including those for size, squareness, and offsets at corners.
2. Presence and functioning of weep system.
3. Minimum required face or edge clearances.
4. Effective sealing between joints of glass-framing members.

B. Proceed with installation only after unsatisfactory conditions have been corrected.

3.2 PREPARATION

A. Clean glazing channels and other framing members receiving glass immediately before glazing. Remove coatings not firmly bonded to substrates.

3.3 GLAZING, GENERAL

A. Comply with combined written instructions of manufacturers of glass, sealants, gaskets, and other glazing materials, unless more stringent requirements are indicated, including those in referenced glazing publications.

B. Glazing channel dimensions, as indicated on Drawings, provide necessary bite on glass, minimum edge and face clearances, and adequate sealant thicknesses, with reasonable tolerances. Adjust as required by Project conditions during installation.

C. Protect glass edges from damage during handling and installation. Remove damaged glass from Project site and legally dispose of off Project site. Damaged glass is glass with edge damage or other imperfections that, when installed, could weaken glass and impair performance and appearance.

D. Apply primers to joint surfaces where required for adhesion of sealants, as determined by preconstruction sealant-substrate testing.

E. Install setting blocks in sill rabbets, sized and located to comply with referenced glazing publications, unless otherwise required by glass manufacturer. Set blocks in thin course of compatible sealant suitable for heel bead.

F. Do not exceed edge pressures stipulated by glass manufacturers for installing glass lites.

G. Provide spacers for glass lites where length plus width is larger than 50 inches as follows:

1. Locate spacers directly opposite each other on both inside and outside faces of glass. Install correct size and spacing to preserve required face clearances, unless gaskets and glazing tapes are used that have demonstrated ability to maintain required face clearances and to comply with system performance requirements.
2. Provide 1/8-inch minimum bite of spacers on glass and use thickness equal to sealant width. With glazing tape, use thickness slightly less than final compressed thickness of tape.

H. Provide edge blocking where indicated or needed to prevent glass lites from moving sideways in glazing channel, as recommended in writing by glass manufacturer and according to requirements in referenced glazing publications.

I. Set glass lites in each series with uniform pattern, draw, bow, and similar characteristics.

J. Where wedge-shaped gaskets are driven into one side of channel to pressurize sealant or gasket on opposite side, provide adequate anchorage so gasket cannot walk out when installation is subjected to movement.

K. Square cut wedge-shaped gaskets at corners and install gaskets in a manner recommended by gasket manufacturer to prevent corners from pulling away; seal corner joints and butt joints with sealant recommended by gasket manufacturer.

3.4 GASKET GLAZING (DRY)

A. Fabricate compression gaskets in lengths recommended by gasket manufacturer to fit openings exactly, with allowance for stretch during installation.

B. Insert soft compression gasket between glass and frame or fixed stop so it is securely in place with joints miter cut and bonded together at corners.

C. Center glass lites in openings on setting blocks and press firmly against soft compression gasket by inserting dense compression gaskets formed and installed to lock in place against faces of removable stops. Start gasket applications at

corners and work toward centers of openings. Compress gaskets to produce a weathertight seal without developing bending stresses in glass. Seal gasket joints with sealant recommended by gasket manufacturer.

D. Install gaskets so they protrude past face of glazing stops.

3.5 SEALANT GLAZING (WET)

A. Install continuous spacers, or spacers combined with cylindrical sealant backing, between glass lites and glazing stops to maintain glass face clearances and to prevent sealant from extruding into glass channel and blocking weep systems until sealants cure. Secure spacers or spacers and backings in place and in position to control depth of installed sealant relative to edge clearance for optimum sealant performance.

B. Force sealants into glazing channels to eliminate voids and to ensure complete wetting or bond of sealant to glass and channel surfaces.

C. Tool exposed surfaces of sealants to provide a substantial wash away from glass.

3.6 LOCK-STRIP GASKET GLAZING

A. Comply with ASTM C 716 and gasket manufacturer's written instructions. Provide supplementary wet seal and weep system, unless otherwise indicated.

3.7 CLEANING AND PROTECTION

A. Protect exterior glass from damage immediately after installation by attaching crossed streamers to framing held away from glass. Do not apply markers to glass surface. Remove nonpermanent labels, and clean surfaces.

B. Protect glass from contact with contaminating substances resulting from construction operations, including weld splatter. If, despite such protection, contaminating substances do come into contact with glass, remove substances immediately as recommended by glass manufacturer.

C. Examine glass surfaces adjacent to or below exterior concrete and other masonry surfaces at frequent intervals during construction, but not less than once a month, for buildup of dirt, scum, alkaline deposits, or stains; remove as recommended in writing by glass manufacturer.

D. Remove and replace glass that is broken, chipped, cracked, or abraded or that is damaged from natural causes, accidents, and vandalism, during construction period.

E. Wash glass on both exposed surfaces in each area of Project not more than four days before date scheduled for inspections that establish date of Date of issuance of the certificate of compliance. Wash glass as recommended in writing by glass manufacturer.

GLAZING SCHEDULE

(note: All glazing shall be coated with a sacrificial 7 mil. anti-graffiti film)

ARCHITECTURAL LAMINATED GLASS
(Option 1)

GLASS REQUIREMENTS

A. Two-ply laminate, both plies Heat strengthened and ANSI Z97.1 etched

ASTMC 1172, Kind LHS (both plies heat strengthened),

B. Exterior Ply- ¼" Azuria

ASTM C 1036 Type 1, Class 2 (Azuria, Heat-absorbing, and Light-reducing), Quality q3

ASTM C 1048 Condition A, Kind HS

C. Interior Ply- ¼" Clear

ASTM C 1036 Type 1, Class 1 (Clear), Quality q3

ASTM C 1048 Condition A, Kind HS

UNIT MAKEUP

A. 9/16" nominal laminated glass unit as manufactured by Viracon (or Designer approved equal).

1. ¼" Azuria HS
2. .060 Clear pvb
3. ¼" Clear HS

UNIT REQUIREMENTS

- Visible light transmission of 65%
- Exterior reflection of 6%
- Winter nighttime U-Value of .97 BTU/(hr*ft2*°F)
- Summer daytime U-Value of .88 BTU/(hr*ft2*°F)
- Shading coefficient of .57

ARCHITECTURAL LAMINATED GLASS
(Option 2)

GLASS REQUIREMENTS

A. Two-ply laminate, both plies Heat strengthened and ANSI Z97.1 etched
ASTMC 1172, Kind LHS (both plies heat strengthened),

B. Exterior Ply- ¼" Clear
ASTM C 1036 Type 1, Class 1 (Clear), Quality q3
ASTM C 1048 Condition A, Kind HS

C. Interior Ply- ¼" Clear
ASTM C 1036 Type 1, Class 1 (Clear), Quality q3
ASTM C 1048 Condition A, Kind HS

UNIT MAKEUP

A. 9/16" nominal laminated glass unit as manufactured by Viracon (or Designer approved equal).

1. ¼" Clear HS
2. .060 Clear pvb
3. ¼" Clear HS

UNIT REQUIREMENTS

- Visible light transmission of 85%
- Exterior reflection of 7%
- Winter nighttime U-Value of .97 BTU/(hr*ft2*°F)
- Summer daytime U-Value of .88 BTU/(hr*ft2*°F)
- Shading coefficient of .83

END OF SECTION 088000

SECTION 088755 - GRAFFITI RESISTANT GLAZING FILMS

PART 1 - GENERAL

1.1 SUMMARY

A. Section includes film products applied to glass surfaces to impart safety and security characteristics.

1.2 REFERENCES

A. The following standards are referenced in this Section
   1. ASTM E-84, "Test Method for Surface Burning Characteristics of Building Materials".
   2. ASTM D 882, “Standard Test Method for Tensile Properties of Thin Plastic Sheeting.”
   3. ASTM E 903, “Test Method for Solar Absorptance, Reflectance, and Transmittance of Materials Using Integrating Spheres”
   4. ASTM D 1044, “Test Method for Resistance of Transparent Plastics to Surface Abrasion.”
   5. ASTM D 4830, “Standard Test Methods for Characterizing Thermoplastic Fabrics Used in Roofing and Waterproofing. Section 7: Puncture Strength.”

1.3 PERFORMANCE REQUIREMENTS

A. Thermal and Optical Performance Properties: Provide glazing films with the following thermal and optical performance properties (on 1/8 inch clear glass) as determined according to procedures indicated in ASHRAE Handbook of Fundamentals:
   1. Solar Energy Rejected: 17%
   2. Shading Coefficient: .95
   3. Solar Reflectance: 8%
   4. Solar Absorptance: 13%
   5. Solar Transmittance: 79%
   6. Visible Light Transmittance: 89%
   7. U-Value (winter median): 1.02
   8. Ultraviolet Transmission: <1% ; Provide films with UV absorbing materials that limit the weighted UV transmission to less than 5 percent when measured in accordance with ASTM E 903.

B. Scratch Resistance: Provide films that have 5.0 percent maximum haze increase when tested to ASTM D 1044, using 100 revolutions, a CS-10F Taber abraser and 500 g weights.

C. Surface Burning Characteristics: Provide films that have Flame Spread Index of 0 and Smoke Development Index of 30 or less when tested in accordance to ASTM E 84.

D. Puncture Strength of 111 lbs under ASTM D4830.

E. Tensile Properties: When measured in accordance with ASTM D 882
   1. Minimum Tensile Strength of film: 30,000 psi. (as reported by Polyester Supplier – average).
   2. Minimum Elongation at Break: 100%.
   3. Minimum Break Strength: 170 lb/in.

1.4 SUBMITTALS

A. Submit the following in accordance with Form 816 Article 1.20-1.05.02.

B. Product Data (on 1/8 inch clear glass): For each film product indicated.

C. Samples: 12-inch square samples of each glazing film.

D. Qualification Data: For firms and persons specified in "Quality Assurance" Article to demonstrate their capabilities and experience. Include lists of completed projects with project names and addresses, names and addresses of architects and owners, and other information specified.

E. Closeout Submittals: Upon completion of the Work, submit the following;
   1. Maintenance (cleaning) and replacement instructions.

1.5 QUALITY ASSURANCE

A. Manufacturer Qualifications: Engage a firm experienced in manufacturing systems similar to those indicated for this Project and meeting the standards of the International Standards Organization (ISO), ISO 9001 Quality Assurance in Production and Installation.

B. Installer Qualifications: Engage an experienced installer certified, licensed, or otherwise qualified by film manufacturer as having the necessary experience, staff, and training to install manufacturer's products according to specified requirements.

C. Mockups: Apply glazing films in locations as directed to verify selections made under sample Submittals and to demonstrate aesthetic effects and qualities of materials and execution.
   1. Film to be Factory applied and NOT field applied.

1.6 DELIVERY, STORAGE, AND HANDLING

A. Protect glazing films according to manufacturer's written instructions and as needed to prevent damage condensation, temperature changes, direct exposure to sun, or other causes.

1.7 PROJECT CONDITIONS

A. Environmental Limitations: Do not proceed with film installation when ambient and substrate temperature conditions are outside limits permitted by manufacturer and when glass substrates are wet from frost, condensation, or other causes.

1.8 WARRANTY:

A. Refer to Form 816 Article 1.20-1.06.08.
   1. Warranty Period: Manufacturer's standard, but not less than 5-years from the issuance of the Certificate of Compliance.

PART 2 - PRODUCTS

2.1 MANUFACTURERS/PRODUCTS

A. Provide one of the products:
   1. CPFilms Inc.; LLumar Window Film (or Designer approved equal subject to compliance with specifications).

B. Product Description: Single-layered product, 6 mil thick, applied to interior glass surfaces, consisting of from outboard surface to inboard surface:
   1. Removable release liner.
   2. Pressure sensitive adhesive.
   3. Clear, dyed or metallized layers of polyester film.
   4. Scratch resistant coating.

C. Colors: Clear.

2.2 GLAZING FILM ACCESSORIES

A. General: Provide products complying with requirements of glazing film manufacturer for application indicated, and with a proven record of compatibility with surfaces contacted in installation.

B. Adhesive: Pressure sensitive acrylic adhesive system.

C. Cleaners, Primers, and Sealers: Types recommended by glazing film manufacturer.

PART 3 - EXECUTION

3.1 EXAMINATION

A. Factory applied installation: Examine glass and surrounding adjacent surfaces for conditions affecting installation.
   1. Report conditions that may adversely effect installation. In report, include description of any glass that is broken, chipped, cracked, abraded, or damaged in any way.

B. Proceed with installation only after unsatisfactory conditions have been corrected.

C. Beginning of installation means acceptance of conditions.

3.2 PREPARATION

A. Comply with manufacturer's written instructions for surface preparation.

B. Immediately before beginning installation of films, clean glass surfaces of substances that could impair glazing film's bond, including mold, mildew, oil, grease, dirt and other foreign materials.

C. Protect window frames and surrounding conditions from damage during installation.

3.3 INSTALLATION

A. General: Comply with glazing film manufacturers' written installation instructions applicable to products and applications indicated, except where more stringent requirements apply.
   1. Install film continuously, but not necessarily in one continuous length.
      a. If seamed, install with no gaps. Horizontal seams are allowed. No vertical seams. Install seams horizontally, plumb and as high as possible.
   2. Do not remove release liner from film until just before each piece of film is cut and ready for installation.
   3. Install film with mounting solution and custom cut to the glass with neat, square comers and edges to within 1/16 inch of the window frame.
   4. Install film absent bubbles, wrinkles, blisters, edge lifting and blemishes (within the installing technician's control).

B. After installation, view film from a distance of 10 feet against a bright uniform sky or background. Film shall appear uniform in appearance with no visible streaks,

banding, thin spots or pinholes.

1. If installed film does not meet this criteria, remove and replace with new film.

3.4 CLEANING

A. Remove excess mounting solution at finished seams, perimeter edges, and adjacent surfaces.

B. Use cleaning methods recommended by glazing film manufacturer.

C. Replace films that cannot be cleaned.

END OF SECTION 088755

SECTION 099600 - HIGH-PERFORMANCE COATINGS

PART 1 - GENERAL

1.1 SUMMARY

A. This Section includes surface preparation and application of high-performance coating systems to all exposed steel. This includes, but is not limited to, all structural components, e.g., columns, channels, rafters, framing, etc., in addition to metal roof decking and all associated connections and parts.

B. Work included in this section may require coordination with Metro-North regarding track outages, flagmen, or other issues related to work around railroad facilities. The Contractor shall pay special attention to the article entitled “NTC - Work on Railroad Properties” in the General Provisions.

C. The adverse conditions dictated by work along a operating railroad necessitate the following conditions:

1. All high performance coatings will be shop-applied.
2. Areas that require field touch-up will be limited to connections and minor abrasions due to erection. Field touch-up is to be applied by the Painting Contractor, certified by the Manufacturer.

D. Where desired by the Designer, a manufacturer and system has been designated. This designation is the “*Basis of Design*” to which a Contractor’s submittal must meet or exceed in terms of quality, finish, operation and appearance.

1.2 DEFINITIONS

A. Standard coating terms defined in ASTM D 16 apply to this Section.

B. Gloss ranges used in this Section include the following:
1. High gloss refers to high-sheen finish with a gloss range more than 65 when measured at a 60-degree meter.

C. Environments: The following terms are used in Part 2 of this Section to distinguish between different corrosive exposures:

1. "Severe environments" are highly corrosive industrial atmospheres with sustained exposure to high humidity and condensation and with frequent cleaning using strong chemicals. Environments with heavy concentrations of strong chemical fumes and frequent splashing and spilling of harsh chemical products are severe environments.

1.3 SUBMITTALS

A. Submit the following in accordance with Form 816 Article 1.20-1.05.02.

B. Product Data: For each coating system indicated. Include block fillers and primers.

1. Material List: An inclusive list of required coating materials. Indicate each material and cross-reference the specific coating, finish system, and application. Identify each material by manufacturer's catalog number and general classification.
2. Manufacturer's Information: Manufacturer's technical information, including label analysis and instructions for handling, storing, and applying each material specified.

C. Certification by manufacturer that products supplied comply with requirements indicated that limit the amount of VOCs in coating products.

D. Samples for Initial Selection: Manufacturer's color charts showing the full range of colors available for each type of finish-coat material indicated.

1. After color selection, Contractor will furnish color chips for surfaces to be coated.

E. Samples for Verification: For each color and material to be applied, with texture to simulate actual conditions, on representative samples of the actual substrate.

1. Provide stepped Samples defining each separate coat, including block fillers and primers. Use representative colors when preparing Samples for review. Resubmit until required sheen, color, and texture are achieved.
2. List of material and application for each coat of each sample. Label each sample for location and application.
3. Submit samples on the following substrates for Architect's review of color and texture:
   a. Ferrous and Nonferrous Metal: Provide two 4-inch- square samples of flat metal and two 8-inch- long samples of solid metal for each color and finish.

F. Qualification Data: For firms and persons specified in "Quality Assurance" Article to demonstrate their capabilities and experience. Include lists of completed projects with project names and addresses, names and addresses of architects and owners, and other information specified.

1.4 QUALITY ASSURANCE

A. Applicator Qualifications: Engage an experienced applicator who has completed high-performance coating system applications similar in material and extent to those indicated for Project and whose work has a record of successful in-service performance.

B. Source Limitations: Obtain primers and undercoat materials for each coating system from the same manufacturer as the finish coats.

1.5 DELIVERY, STORAGE, AND HANDLING

A. Deliver materials to Project site in manufacturer's original, unopened packages and containers bearing manufacturer's name and label with the following information:

1. Name or title of material.
2. Product description (generic classification or binder type).
3. Manufacturer's stock number and date of manufacture.
4. Contents by volume, for pigment and vehicle constituents.
5. Thinning instructions.
6. Application instructions.
7. Color name and number.
8. Handling instructions and precautions.

B. Store materials not in use in tightly covered containers in a well-ventilated area at a minimum ambient temperature of 45 deg F. Maintain containers used in storage in a clean condition, free of foreign materials and residue.

1. Protect materials from freezing. Keep storage area neat and orderly. Remove oily rags and waste daily. Take necessary measures to ensure that workers and work areas are protected from fire and health hazards resulting from handling, mixing, and applying coatings.

1.6 PROJECT CONDITIONS

A. Apply coatings only when temperature of surfaces to be coated and surrounding air temperatures are between 45 and 95 deg F.

B. Do not apply coatings in snow, rain, fog, or mist; when relative humidity exceeds 85 percent; at temperatures less than 5 deg F above the dew point; or to damp or wet surfaces.

1. Allow wet surfaces to dry thoroughly and attain temperature and conditions specified before proceeding with or continuing coating operation.
2. Work may continue during inclement weather only if areas and surfaces to be coated are enclosed and temperature within the area can be maintained within limits specified by manufacturer during application and drying periods.

1.7 EXTRA MATERIALS

A. Furnish extra high-performance coating materials from the same production run as materials applied and in quantities described below. Package coating materials in unopened, factory-sealed containers for storage and identify with labels describing contents.

1. Quantity: Furnish extra coating materials in quantities indicated below:

a. One case of each color for each system applied.

1.8 WARRANTY:

A. Refer to Form 816 Article 1.20-1.06.08.

1. Warranty Period: Manufacturer's standard, but not less than 5-years from the issuance of the Certificate of Compliance.

PART 2 - PRODUCTS

2.1 MANUFACTURERS

A. Available Products: Subject to compliance with requirements, products that may be incorporated into the Work include, but are not limited to, products indicated in the coating system descriptions.

B. Manufacturers' Names: The following manufacturers are referred to in the coating system descriptions by shortened versions of their names shown in parenthesis:

1. Carboline Company (Carboline).
2. Sherwin Williams (SW)
3. MAB Paints (MAB)

2.2 COATINGS MATERIALS, GENERAL

A. Material Compatibility: Provide primers, undercoats, and finish-coat materials that are from the same manufacturer and are compatible with one another and substrates indicated under conditions of service and application, as demonstrated by manufacturer based on testing and field experience.

B. Material Quality: Provide manufacturer's highest grade of the various high-performance coatings specified. Materials not displaying manufacturer's product identification are not acceptable.

1. Proprietary Names: Use of manufacturer's proprietary product names to designate colors or materials is not intended to imply that products named are required to be

used to the exclusion of equivalent products of other manufacturers. Furnish manufacturer's material data and certificates of performance for proposed substitutions.

C. VOC Classification: Provide high-performance coating materials, including primers, undercoats, and finish-coat materials, that have a VOC classification of 450 g/L or less.

2.3 COLORS

A. Colors: To be selected by Designer from the Federal Standards 595B list of colors.

2.4 Schedule of Finishes: The Steel Fabricator shall finish structural steel components for high-performance coatings as specified below:

A. Exterior Exposed Structural Steel including the following components and systems are to receive a 3-coat finishing system per Section 099600 – High Performance Coatings.

a. Platform canopy steel systems, all members including columns, beams, purlins, roof framing components and accessories including base plates. Refer to Specification Section 051200 – Structural Steel for additional details.

b. Exposed tube steel framing and connected miscellaneous steel, including railing systems etc.

2.5 EXTERIOR HIGH-PERFORMANCE COATING SYSTEMS

A. Basis of Design: System specified is based upon a 3-coat priming and finishing system as manufactured by Carboline, as follows:

1. Severe Environment (High-Gloss Finish): One finish coat over one intermediate coat and a primer.

a. Primer: Carboline Carbozinc 859 @ 3.0-10.0 mils dry. Coordinate with steel fabricator for application, and Section 05120 – Structural Steel for priming and steel preparation.

b. 2nd Coat: Carboline Carboguard 888 or 890 (grey) @ 3.0-10.0 mils dry.

c. 3rd Coat: Carboline Carbothane 133 Series LH (color) @ 3.0-6.0 mils dry.

2. Acceptable Alternate Systems (all to be LH, low VOC):

a. 2nd Intermediate Coat: Epoxy applied at spreading rate recommended by manufacturer to achieve a dry film thickness of 3.0 to 8.0 mils.

1) Sherwin Williams: 646 2-Component Epoxy.
2) MAB Paints: 650 HB 2-Component Epoxy.

b. 3rd Coat: Aliphatic polyurethane enamel applied at spreading rate recommended by manufacturer to achieve a dry film thickness of 1.5 to 4.0 mils.

1) Sherwin Williams: 218 HS 2-Component Acrylic Urethane.
2) MAB Paints: 890 HS 2-Component Acrylic-Aliphatic Urethane.

PART 3 - EXECUTION

3.1 EXAMINATION

A. With Applicator present, examine substrates and conditions under which high-performance coatings will be applied, for compliance with coating application requirements.

1. Apply coatings only after unsatisfactory conditions have been corrected and surfaces to receive coatings are thoroughly dry.
2. Start of application is construed as Applicator's acceptance of surfaces within that particular area.

B. Coordination of Work: Review other Sections in which primers or other coatings are provided to ensure compatibility of total systems for various substrates. On request, furnish information on characteristics of specified finish materials to ensure compatible primers.

1. If a potential incompatibility of primers applied by others exists, obtain the following from the primer Applicator before proceeding:

a. Confirmation of primer's suitability for expected service conditions.
b. Confirmation of primer's ability to be top coated with materials specified.

2. Notify Engineer about anticipated problems before using the coatings specified over substrates primed by others.

3.2 PREPARATION

A. General: Remove plates, machined surfaces, and similar items already in place that are not to be coated. If removal is impractical or impossible because of size or weight of item, provide surface-applied protection before surface preparation and coating.

1. After completing coating operations, reinstall items that were removed; use workers skilled in the trades involved.

B. Cleaning: Before applying high-performance coatings, clean substrates of substances that could impair bond of coatings. Remove oil and grease before cleaning.

1. Schedule cleaning and coating application so dust and other contaminates from cleaning process will not fall on wet, newly coated surfaces.

C. Surface Preparation: Clean and prepare surfaces to be coated according to manufacturer's written instructions for each substrate condition and as specified.

1. Prepare steel surfaces as specified in Sections 5 specifications.

2. Provide barrier coats over incompatible primers or remove primers and reprime substrate.

3. Ferrous-Metal Substrates: Clean ungalvanized ferrous-metal surfaces that have not been shop coated; remove oil, grease, dirt, loose mill scale, and other foreign substances. Use solvent or mechanical cleaning methods that comply with SSPC recommendations.

a. Treat bare and sandblasted or pickled clean metal with a metal treatment wash coat before priming.

D. Material Preparation: Carefully mix and prepare coating materials according to manufacturer's written instructions.

1. Maintain containers used in mixing and applying coatings in a clean condition, free of foreign materials and residue.
2. Stir materials before applying to produce a mixture of uniform density. Stir as required during application. Do not stir surface film into the material. Remove film and, if necessary, strain coating material before using.
3. Use only the type of thinners approved by manufacturer and only within recommended limits.

E. Tint each undercoat a lighter shade to facilitate identification of each coat if multiple coats of the same material are to be applied. Tint undercoats to match color of finish coat, but provide sufficient difference in shade of undercoats to distinguish each separate coat.

3.3 APPLICATION

A. General: Apply high-performance coatings according to manufacturer's written instructions.

1. Use applicators and techniques best suited for the material being applied.
2. Do not apply high-performance coatings over dirt, rust, scale, grease, moisture, scuffed surfaces, or conditions detrimental to forming a durable coating film.
3. Coating colors, surface treatments, and finishes are indicated in the coating system descriptions.
4. Provide finish coats compatible with primers used.
5. The term "exposed surfaces" includes areas visible when permanent or built-in fixtures, convector covers, grilles, covers for finned-tube radiation, and similar components are in place. Extend coatings in these areas, as required, to maintain system integrity and provide desired protection.

    a. Coat surfaces behind movable equipment and furniture the same as similar exposed surfaces. Before final installation, coat surfaces behind permanently fixed equipment or furniture with prime coat only.
    b. Coat back sides of access panels, removable or hinged covers, and similar hinged items to match exposed surfaces.

B. Scheduling Coating: Apply first coat to surfaces that have been cleaned, pretreated, or otherwise prepared for coating as soon as practicable after preparation and before subsequent surface deterioration.

1. The number of coats and film thickness required is the same regardless of application method.

    a. Do not apply succeeding coats until previous coat has cured as recommended by manufacturer.
    b. Where manufacturer's written instructions require sanding, sand between applications to produce a smooth, even surface.
    c. Allow sufficient time between successive coats to permit proper drying. Do not recoat surfaces until coating has dried to where it feels firm, does not deform or feel sticky under moderate thumb pressure, and application of another coat does not cause undercoat to lift or lose adhesion.

2. If undercoats or other conditions show through final coat, apply additional coats until cured film has a uniform coating finish, color, and appearance. Give special attention to edges, corners, crevices, welds, exposed fasteners, and similar surfaces to ensure that they receive a dry film thickness equivalent to that of flat surfaces.

C. Application Procedures: Apply coatings by brush, roller, spray, or other applicators according to manufacturer's written instructions.

1. Brush Application: Use brushes best suited for material applied and of appropriate size for the surface or item being coated.

a. Apply primers and first coats by brush unless manufacturer's written instructions permit using roller or mechanical applicators.
b. Brush out and work brush coats into surfaces in an even film.
c. Eliminate cloudiness, spotting, holidays, laps, brush marks, runs, sags, ropiness, or other surface imperfections. Neatly draw glass lines and color breaks.

2. Rollers: Use rollers of carpet, velvet back, or high-pile sheep's wool as recommended by manufacturer for the material and texture required.
3. Spray Equipment: Use mechanical methods to apply coating if permitted by manufacturer's written instructions and governing regulations.

a. Use spray equipment with orifice size recommended by manufacturer for material and texture required.
b. Apply each coat to provide the equivalent hiding of brush-applied coats.
c. Do not double back with spray equipment building-up film thickness of two coats in one pass, unless recommended by manufacturer.

D. Minimum Coating Thickness: Apply each material no thinner than manufacturer's recommended spreading rate. Provide total dry film thickness of the entire system as recommended by manufacturer.

E. Field Connections: Areas adjacent steel field connections to be delivered to jobsite with primer coat only. See Section:” FIELD PAINTING ”

1. Shop-apply primer coat to entire component.
2. Mask-off areas around field connections after erection and final torque of connection bolts
3. Touch-up areas of primer coat that have been damaged.
4. Apply finish coats to components, allowing proper feathering of surfaces to obtain a consistent finish.

F. Prime Coats: Before applying finish coats, apply a prime coat of material, as recommended by manufacturer, to material required to be coated or finished that has not been prime coated by others.

1. Stripe paint corners, crevices, bolts, welds, and sharp edges.

2. Recoat primed and sealed substrates if there is evidence of suction spots or unsealed areas in first coat, to ensure a finish coat with no burn-through or other defects caused by insufficient sealing.

G. Completed Work: Match approved Samples for color, texture, and coverage. Remove, refinish, or recoat work that does not comply with specified requirements.

3.4 FIELD QUALITY CONTROL

A. Owner reserves the right to invoke the following procedure at any time and as often as Owner deems necessary during the period when coatings are being applied:

1. Owner will engage the services of a qualified testing agency to sample coating material being used. Samples of material delivered to Project site will be taken, identified, sealed, and certified in presence of Contractor.
2. Testing agency will perform appropriate tests for the following characteristics as required by Owner:

    a. Quantitative materials analysis.
    b. Absorption.
    c. Accelerated weathering.
    d. Accelerated yellowness.
    e. Color retention.
    f. Alkali and mildew resistance.
    g. Abrasion resistance.
    h. Apparent reflectivity.
    i. Washability.
    j. Dry opacity.
    k. Recoating.
    l. Skinning.

3. Owner may direct Contractor to stop applying coatings if test results show materials being used do not comply with specified requirements. Contractor shall remove noncomplying coating materials from Project site, pay for testing, and recoat surfaces coated with rejected materials. If necessary, Contractor may be required to remove rejected materials from previously coated surfaces if, on recoating with specified materials, the two coatings are not compatible.

3.5 FIELD PAINTING

A. Summary: Field painting will be limited to connections and minor abrasions from delivery or erection. All other painting is shop-applied.

B. Restrictions: Train schedules and site conditions may necessitate railroad track outages, railroad flagmen, and nighttime work periods for field painting. The Contractor shall pay special attention to the article entitled, “Safety and Protection of the Railroad Traffic and Property”, “requirements for Temporary Protection Shields…” and other Amtrak Specifications in the General Provisions.

C. Comply with the provisions of Article M.07 of Form 816 except as otherwise stated specified.

1 Clean all steel soon after erection of dirt, mud, lubricant or other foreign matter that may have accumulated.

2. Mask off adjacent painted areas that have already been painted, allowing approximately 1” overlap for feathering.

2. Prime and Spot paint all field bolts, field welds, and abrasions to the shop coat with the same material used for the shop coat. Use a heavy field coat of bituminous paint on those portions of columns to be embedded in masonry or concrete in the exterior walls, and on interior columns through the slab on grade to be encased in concrete.

D. The ambient air and surface temperature shall be at least 5^0F above the dew point prior to and during coating applications.

3.6 CLEANING

A. Cleanup: At end of each workday, remove rubbish, empty cans, rags, and other discarded materials from Project site.

1. After completing coating application, clean spattered surfaces. Remove spattered coatings by washing, scraping, or other methods. Do not scratch or damage adjacent finished surfaces.

3.7 PROTECTION

A. Protect work of other trades, whether being coated or not, against damage from coating operation. Correct damage by cleaning, repairing, replacing, and recoating, as approved by Architect, and leave in an undamaged condition.

1. Provide "Wet Paint" signs to protect newly coated finishes. After completing coating operations, remove temporary protective wrappings provided by others to protect their work.
2. At completion of construction activities of other trades, touch up and restore damaged or defaced coated surfaces. Comply with procedures specified in PDCA P1.

END OF SECTION 099600

SECTION 101426 – PANEL SIGNAGE

PART 1 - GENERAL

1.1 SUMMARY

A. This Section includes the following types of signs:

1. Painted aluminum panel station signs (to be installed on railings).

1.2 SUBMITTALS

A. Submit the following in accordance with Form 816 Article 1.20-1.05.02

B. Product data for each type of sign specified, including details of construction relative to materials, dimensions of individual components, profiles, and finishes.

C. Shop drawings showing fabrication and erection of signs. Include plans, elevations, and large-scale sections of typical members and other components. Show anchors, grounds, layout, reinforcement, accessories, and installation details. Key plans showing proposed sign locations for the entire project.

1. Provide message list for each sign required, including large-scale details of wording and lettering layout.
2. For signs supported by or anchored to permanent construction, provide setting drawings, templates, and directions for installation of anchor bolts and other anchors to be installed.
3. Additions or modifications to details, which are necessary due to special conditions encountered during the site survey, shall be provided by the Contractor as part of the contract and at no additional cost to the ConnDOT.

D. Materials List: Submit complete list of all materials proposed to be furnished and installed under this Section, making all submittals and re-submittals in accordance with the provisions of the Contract Documents and submit a notarized Certificate of Compliance.

E. Samples: Provide the following samples of each sign component for initial selection of color, pattern and surface texture as required and for verification of compliance with requirements indicated.

1. Samples for verification of color, pattern, and texture selected and compliance with requirements indicated:

a. Aluminum Panel: samples of finish type and color, on 12-inch-long plate sections showing the full range of colors available and actual finish obtained with complete graphics.

b. Typical mounting brackets.

F. As part of Shop Drawing submission provide a detailed schedule of proposed times and dates for the installation of signage. Schedule shall be submitted for review and approval. All work shall be performed in accordance with any modifications affected by train schedule.

1.3 QUALITY ASSURANCE

A. Sign Fabricator Qualifications: Firm experienced in producing signs similar to those indicated for this Project, with a record of successful in-service performance, and sufficient production capacity to produce sign units required without causing delay in the Work.

B. Single-Source Responsibility: For each separate sign type required, obtain signs from one source of a single manufacturer.

C. Design Concept: The Drawings indicate sizes, profiles, and dimensional requirements of signs and are based on the specific types and models indicated. Most sign units follow or closely adhere to MTA/Metro-North Railroad Sign Manual standards unless otherwise indicated.

D. For actual fabrication of the Station Signage, use only mechanics who are thoroughly trained and experienced in the skills required for the manufacture and fabrication of the units. In acceptance or rejection of the manufactured units, no allowance will be made for lack of skill on the part of the fabricator/manufacturer.

E. Tolerances:

1. Sign Panels
   a. The Contractor shall note on the shop drawings all fabrication tolerances including, but not limited to: plumb, thickness, length, width, squareness, camber, and flatness. Note: Sign to be installed on Wind Screen system and sign dimensions must coordinate with panel on screen.
   b. Signs shall be free of defects including, but not limited to: buckles, dents, warps, wrinkles, and burrs.

2. Messages
   a. Message Location: ±1/16 inch from the location as shown.

b. Line-to-Line: ±1/32 inch between each line and ±1/16 inch over entire message

c. Letter-to-Letter or Symbol (horizontally and vertically): ±1/32 inch between each letter or symbol and ±1/16 inch over an entire line.

3. Design components to allow for expansion and contraction for temperatures ranging between -20°F and +100°F, without causing buckling, opening of joints other than control joints, or overstressing of welds and fasteners.

4. Comply with AWS D1.2 for recommended practices in shop welding. Provide welds behind finished surfaces without distortion or discoloration of exposed side. Clean exposed welded joints of all welding flux and dress on all exposed and contact surfaces.

5. Mill joints to a tight, hairline fit. Cope or miter corner joints.

F. The unit, or panel to which a unit is to be mounted, must withstand a wind load of 20lbs/sf and horizontal/vertical loads of 250lbs/sf at top center of the sign with a maximum deflection of 1/360 of sign length. Calculations are to be submitted to the Engineer for review.

G. Manufacturer is to provide a five (5) year unconditional guarantee for said units against any defects in workmanship or fabrication from the date of issuance of the Certificate of Compliance.

H. ConnDOT reserves the right to retain an independent testing service to inspect the manufacturing process to ensure conformity to the Contract Documents.

I. The Contractor shall have in effect a Quality Assurance (QA) program clearly defining the procedures and requirements necessary to ensure that all aspects of the Work are accomplished in accordance with the Contract Documents. The Contractor will submit a copy of its QA program to the Engineer within fifteen (15) days after receipt of Notice of Award, for review and approval.

1.4 PROJECT CONDITIONS

A. Field Measurements: Take field measurements prior to preparation of shop drawings and fabrication to ensure proper fitting. Show recorded measurements on final shop drawings. Coordinate fabrication schedule with construction progress to avoid delay.

B. The Contractor shall provide adequate staff to take measurements and notes to determine new sign mounting locations and conditions.

1.5 REFERENCES (as required)

A. American National Standards Institute (ANSI) A 117.1

B. Copper Development Association (CDA)

C. National Association of Architectural Metal Manufacturers (NAAMM)

D. Americans with Disabilities Act Architectural Guidelines (ADAAG)

E. Federal Specifications (FS)

1. FF-S-92B(1) Screw, Machine, Slotted, Cross Recessed or Hexagon Head

1.6 PRODUCT HANDLING

A. Protection: Use all means necessary to protect the signs prior to delivery. The pre-assembled units are to be shipped in water resistant protective covering and crating and palletized. Each sign package is to bear the identification as noted on the sign schedule and grouped according to locations.

B. Packaging: Each sign will come individually shrink wrapped complete with its own bracketry and attachment hardware.

C. Replacements: In the event of damage, repair will be subject to the ConnDOT's discretion as to whether replacement or repair will be the procedure for damaged units, and to be provided by the Contractor at no additional cost to the ConnDOT.

1.7 SCHEDULE OF MANUFACTURE

A. The Contractor shall submit a schedule of completion and sequence of delivery. This schedule shall include but not be limited to the following:

1. Preparation of Shop Drawings and ConnDOT review and approval of Shop Drawings (1 month).

2. Prototype review, final approval, manufacture and sequence of delivery (3 months), unless otherwise indicated on the approved Construction Schedule.

1.8 DELIVERY OF UNITS

A. Contractor shall be responsible for handling and storage. The ConnDOT shall not be responsible until installed and accepted.

1.9 PRODUCTION PROTOTYPE

A. The Contractor shall provide production prototypes for approval. The units will be reviewed by the ConnDOT and comments made.

These units will be used as a model for production and will be considered an actual unit for permanent installation and not as a mock-up.

1.11 WARRANTY

A. Provide a written warranty issued in the name of the ConnDOT and jointly signed by the supplier stating that the sign panels have a guaranteed life of five years against fading, spalling, pinholes, discoloration, staining, gloss reductions or rusting from date of substantial performance.

PART 2 - PRODUCTS

2.1 MANUFACTURERS

A. Available Manufacturers: Subject to compliance with requirements, manufacturers offering products that may be incorporated in the Work include, but are not limited to, the following:

1. Manufacturers of Aluminum Panel Signs, or Designer approved equal.:

a. Equivalent to ConnDOT Form 816, Standard Specifications for Roads, Bridges and Incidental Construction (2004), Item No. 120810, Sign Face – Sheet Aluminum; and M.18.13—Sign Face—Sheet Aluminum.

2.2 MATERIALS

A. Aluminum Panels:

1. Panels shall be fabricated from aluminum, alloy 6061-T6 or alloy 5052-H38. Sheet aluminum sign blanks shall conform to ASTM B 20916 gauge 16.

B. Colors:

1. To match ConnDOT station (New Haven line) red. Color is referred to as “PMS – 186”.

2. The panels shall be finished in colors as indicated. Include Rail line logo as directed by ConnDOT project manager. Station Identification Signs which shall have tomato red text and band. Logo copy to be provided.

C. Fasteners: Use concealed fasteners fabricated from metals that are not corrosive to the sign material and mounting surface.

D. Anchors and Inserts: Use nonferrous metal or hot-dipped galvanized anchors and inserts for exterior installations and elsewhere as required for corrosion resistance. Use toothed steel or lead expansion bolt devices for drilled-in-place anchors. Furnish inserts, as required, to be set into concrete or masonry work.

2.3 SIGN FINISHES

A. The Contractor shall provide signage and graphic materials for the entire project in conformance with the following:

2.4 COLOR SCHEDULE AND PAINT

A. Signage colors specified herein and shown on the Drawings shall be based on approved manufacturers and/or color system numbers indicated, unless otherwise accepted and approved by the ConnDOT Engineer.

1. PMS – 186 (Tomato Red) - Dupont Co. "Imron 326" two part aliphatic polyurethane enamel.

PART 3 - EXECUTION

3.1 INSTALLATION

A. General: Locate sign units and accessories where indicated, using mounting methods of the type described and in compliance with the manufacturer's instructions.

1. Install signs level, plumb, and at the height indicated, with sign surfaces free from distortion or other defects in appearance.

B. Attach brackets and fittings securely to walls or ceilings with concealed fasteners and anchoring devices to comply with manufacturer's directions.

3.2 CLEANING AND PROTECTION

A. After installation, clean soiled sign surfaces according to the manufacturer's instructions. Protect units from damage until acceptance by the ConnDOT.

END OF SECTION 101426

SECTION 129343 – SITE SEATING

PART 1 – GENERAL

1.1 SUMMARY

A. Exterior Site Seating

1.2 SUBMITTALS

A. Submit the following in accordance with Form 816 Article 1.20-1.05.02

B. Product data: Manufacturers standard data sheets listing dimensions and details

C. Shop Drawings: Manufacturers standard drawings indicating plans, layouts, dimensions and perimeter conditions.

D. Product Samples: Manufacturers standard samples colors. The Designer will not make a color selection until it can be coordinated with other Division 9 color selections.

E. Warranties: Special warranties specified in Part 1.5, “Warranty.”

1.3 QUALITY ASSURANCE:

A. Source Limitations: Obtain from a single manufacturer in accordance with Form 816 Article 1.20-1.06.01.

B. Conduct a Pre-Installation Meeting at the Project Site in compliance with the requirements of Form 816 Article 1.20-1.05.24 subsection 2.

1.4 DELIVERY, STORAGE, AND HANDLING:

A. Refer to Form 816 Article 1.06.03 and Form 816 Article 1.20-1.06.03 for additional information.

1.5 WARRANTY:

A. Refer to Form 816 Article 1.20-1.06.08 for additional information.
   1. Warranty Period: Manufacturer's standard, but not less than 5-years from the issuance of the Certificate of Compliance.

1.6 SPARE PARTS:

A. Furnish to the Engineer spare parts described below that match products installed and that are packaged with protective covering for storage and identified with labels describing contents.
   1. Ten (10) percent overage for spare parts.

PART 2 –Exterior Site Seating

2.1 MANUFACTURER

A. Landscape Forms, Inc. (or Designer approved equal subject to compliance with specifications)
431 Lawndale Avenue
Kalamazoo, MI 49048
Phone: (800) 521-2546
Phone: (269) 381-0396
Fax: (269) 381-3455
Email: Specify@landscapeforms.com

2.2 PRODUCT DESCRIPTION

A. Modified Plexus II Collection

B. Specifications:

1. Plexus 4 seat backed bench with 3 welded arms on a horizontal tube and surface mount support. This product must pass ASTM, BIFMA, or industry standards. Specifications are subject to change without notice.

2. Basic Use: Heavy public use for Metro North Railroad.

3. Composition and materials:

   a. Seats: Seats are constructed of a steel wire grid panel welded to a tubular steel frame. The grid panel is constructed of 5/16" dia. wires and then reinforced with 1/8” cross wires spaced 2 1/l2” oc. The frame and arm rests are constructed of 7/8” o.d. x .120” wall ASTM A513 HREW steel tube. The rams are welded directly to the seat frame.

   b. Supports: Horizontal support is 3" o.d. x .120” wall ASTM A513 HREW steel tube. Vertical supports are 2 1/2 o.d. x .120” wall steel tube. Surface mount plates are 8” dia. x 3/8”” thick steel plate is 8-1/2” dia. o.d. x 1-1/2” high spun steel covers.

4. Sizes and Shapes: Individual straight seats with backs are 21 3/4" wide and 27 1/2" deep. Overall length of 4-seat unit is approximately 97” with end arms.

5. Finishes: Finish is Landscape Forms’ Pangard II® finishing process that includes a rust inhibitor, a primer powdercoat and a final top coat finish of thermosetting polyester powdercoat that is U.V., chip and flake resistant.

6. Colors: Metro North Railroad Modified Plexus bench color is to be selected by designer.

7. Corrosion Resistance: The Pangard II® system includes multiple stages of washing and zinc phosphate pre-treatment. The next step is a submersion in an epoxy primer that penetrates every crevice and provides superior edge protection. Average e-coat thickness is 1 mil.

8. High Quality Topcoat: The Pangard II® system applies an initial primer layer of powdercoat for increased corrosion resistance before the top coat of polyester powdercoat. Both are individually cured in an oven. This heating process cross-links the coating and fuses it to the previous coating. Average thickness is 5-6 mils total.

C. Technical Data

1. Recycled Content: Plexus II has a recycled material content of 86% or greater. Post-consumer content is 57% or greater and pre consumer content is 29% or greater. Plexus II is 100% recyclable.

2. Finishes: The following are test results for Landscape Forms’ Pangard II® polyester powder coat:

   a. Gloss according to Garner 60 deg. ASTM D 523: +/- 5
   b. UV Resistance (Color & Gloss) ASTM G155, cycle 7: Delta E <2 @ 2.0 mils & <20% loss
   c. Cross hatch adhesion ASTM D 3359 method B: 100% pass d. Flexibility test (Mandrel) ASTM D 522: 3 mm @ 2 mils
   e. Erichsen cupping ISO 1520: 8 mm
   f. Impression hardness (Buchholz) ISO 2815: 95 g. Impact test ASTM D 2794: 60 in/lb @ 2.5 mils h. Pencil hardness ASTM D 3363: 2H (min.)
   i. Corrosion Resistance 1500 hr test, ASTM B 117: max. undercutting 1 mm
   j. Humidity Resistance 1500 hr test, ASTM D 2247-87: max. blisters 1 mm

PART 3 - EXECUTION

3.1 INSTALLATION

A. Assembly of units to be done in accordance with assembly instructions with hardware provided by Landscape Forms. Installation is to be done by customer or his agent in accordance with specifications of customer's architect or planner. Corrosion resistant anchor bolts for surface mount option furnished by others.

3.2 AVAILABILITY AND COST

A. Availability: Orders are processed after a signed purchase order or letter order plus approval of all shop drawings or special options (if required). Delivery time varies depending on time of year and customer requirements.

B. Costs: All prices are from current price list and are FOB, Kalamazoo, Michigan. For specific prices and delivery time, contact:

Landscape Forms, Inc.
431 Lawndale Avenue Kalamazoo, Michigan 49048 (800) 521-2546.

3.3 WARRANTY

A. Landscape Forms, Inc. warrants its products to be free from defects in material and/or workmanship for a period of three years from the date of invoice. All claims must be submitted in writing, with a copy of the invoice to:

Landscape Forms, Inc.
431 Lawndale Avenue Kalamazoo, Michigan 49048

3.4 MAINTENANCE

A. For outdoor use, no care is required. For indoor use, occasional dusting may be done. Steam cleaning is not recommended. Scratches and gouges can be repaired by sanding, then repainting with a touch up kit from Landscape Forms.

3.5 TECHNICAL SERVICES

A. Call Landscape Forms, Inc. for information.

END OF SECTION 129343

SECTION 260500 – COMMON WORK RESULTS FOR ELECTRICAL

PART 1 – GENERAL

1.1 RELATED DOCUMENTS

A. Drawings and general provisions of the Contract, including General and Supplementary Conditions and Division 01 Specification Sections, apply to this Section.

1.2 SUMMARY

A. Section Includes:

1. Electrical equipment coordination and installation.

2. Sleeves for raceways and cables.

3. Sleeve seals.

4. Grout.

5. Common electrical installation requirements.

1.3 DEFINITIONS

A. EPDM: Ethylene-propylene-diene terpolymer rubber.

B. NBR: Acrylonitrile-butadiene rubber.

1.4 SUBMITTALS

A. Product Date: For sleeve seals.

B. Shop Drawing Review Stamp Definitions

1. “No Exceptions Taken” means that the shop drawing is correct as to performance, capacity, etc. and substantial conformance to the contract drawings and specifications. Fabrication and/or purchase may commence.

2. “Make Corrections Noted” means that the shop drawing is correct as to performance capacity, etc. and substantial conformance to the contract drawings and/or specifications, subject to and in compliance with the annotations and/or corrections indicated on the shop drawing. Fabrication and/or purchase may commence.

3. “Amend and Resubmit” means that the comments and/or correction are so extensive and important that the reviewer wants to see how the comments and/or corrections are resolved prior to release for fabrication and/or purchase. Fabrications and/or purchase may <u>not</u> commence.

4. “Rejected” means that the shop drawing does not comply or conform to the contract drawings and/or specifications. Fabrication and/or purchase may <u>not</u> commence.

1.5 COORDINATION

A. Coordinate arrangement, mounting, and support of electrical equipment.

1. To allow maximum possible headroom unless specific mounting heights that reduce headroom are indicated.

2. To provide for ease of disconnecting the equipment with minimum interference to other installations.

3. To allow right of way for piping and conduit installed at required slope.

4. So connecting raceways, cables, wireways, cable trays, and busways will be clear of obstructions and of the working and access space of other equipment.

B. Coordinate installation of required supporting devices and set sleeves in cast-in-place concrete, masonry walls, and other structural components as they are constructed.

C. Furnish and Coordinate location of access panels and doors for electrical items that are behind finished surfaces or otherwise concealed. Access doors and panels are specified in Division 08 Section “Access Doors and Frames”, and shall be installed by division 08 contractors.

D. Coordinate sleeve selection and application with selection and application of firestopping specified in Division 07 Section “Penetration Firestopping.”

PART 2 – PRODUCTS

2.1 SLEEVES FOR RACEWAYS AND CABLES

A. Steel Pipe Sleeves: ASTM A 53/A 53M, Type E, Grade B, Schedule 40, galvanized steel, plain ends.

B. Sleeves for Rectangular Openings: Galvanized sheet steel.

1. Minimum Metal Thickness:

a. For sleeve cross-section rectangle perimeter less than 50 inches and no side more than 16 inches, thickness shall be 0.052 inch.

b. For sleeve cross-section rectangle perimeter equal to, or more than, 50 inches and 1 or more sides equal to, or more than, 16 inches, thickness shall be 0.138 inch.

2.2 SLEEVE SEALS

A. Description: Modular sealing device, designed for field assembly, to fill annular space between sleeve and raceway or cable.

1. Manufacturers: Subject to compliance with requirements, available manufacturers offering products that may be incorporated into the Work include, but are not limited to, the following:

a. Advance Products & Systems, Inc.

b. Calpico, Inc.

c. Metraflex Co.

d. Pipeline Seal and Insulator, Inc.

2. Sealing Elements: EPDM interlocking links shaped to fit surface of cable or conduit. Include type and number required for material and size of raceway or cable.

3. Pressure Plates: Plastic. Include two for each sealing element.

4. Connecting Bolts and Nuts: Carbon steel with corrosion-resistant coating of length required to secure pressure plates to sealing elements. Include one for each sealing element.

2.3 GROUT

A. Nonmetallic, Shrinkage-Resistant Grout: ASTM C 1107, factory-packaged, nonmetallic aggregate grout, noncorrosive, nonstaining, mixed with water to consistency suitable for application and a 30-minute working time.

PART 3 – EXECUTION

3.1 COMMON REQUIREMENTS FOR ELECTRICAL INSTALLATION

A. Comply with NECA 1.

B. Measure indicated mounting heights to bottom of unit for suspended items and to center of unit for wall-mounting items.

C. Headroom Maintenance: If mounting heights or other location criteria are not indicated, arrange and install components and equipment to provide maximum possible headroom consistent with these requirements.

D. Equipment: Install to facilitate service, maintenance, and repair or replacement of components of both electrical equipment and other nearby installations. Connect in such a way as to facilitate future disconnecting with minimum interference with other items in the vicinity.

E. Right of Way: Give to piping systems installed at a required slope.

3.2 SLEEVE INSTALLATION FOR ELECTRICAL PENETRATIONS

A. Electrical penetrations occur when raceways, cables, wireways, cable trays, or busways penetrate concrete slabs, concrete or masonry walls, or fire-rated floor and wall assemblies.

B. Concrete Slabs and Walls: Install sleeves for penetrations unless core-drilled holes or formed openings are used. Install sleeves during erection of slabs and walls.

C. Use pipe sleeves unless penetration arrangement requires rectangular sleeved opening.

D. Fire-Rated Assemblies: Install sleeves for penetrations of fire-rated floor and wall assemblies unless openings compatible with firestop system used are fabricated during construction of floor or wall.

E. Cut sleeves to length for mounting flush with both surfaces of walls.

F. Extend sleeves installed in floors 2 inches above finished floor level unless otherwise noted on drawings.

G. Size pipe sleeves to provide ¼-inch annular clear space between sleeve and raceway or cable, unless indicated otherwise.

H. Seal space outside of sleeves with grout for penetrations of concrete and masonry

1. Promptly pack grout solidly between sleeve and wall so no voids remain. Tool exposed surfaces smooth; protect grout while curing.

I. Interior Penetrations of Non-Fire Rated Walls and Floors: Seal annular space between sleeve and raceway or cable, using joint sealant appropriate for size, depth, and location of joint. Comply with requirements in Division 07 Section “Joint Sealants.”

J. Fire-Rated-Assembly Penetrations: Maintain indicated fire rating of walls, partitions, ceilings, and floors at raceway and cable penetrations. Install sleeves and seal raceway and cable penetration sleeves with firestop materials. Comply with requirements in Division 07 Section “Penetration Firestopping.”

K. Roof-Penetration Sleeves: Seal penetration of individual raceways and cables with flexible boot-type flashing units applied in coordination with roofing work.

L. Aboveground, Exterior-Wall Penetrations: Seal penetrations using steel pipe sleeves and mechanical sleeve seals. Select sleeve size to allow for 1-inch annular clear space between pipe and sleeve for installing mechanical sleeve seals.

M. Underground, Exterior-Wall Penetrations: Install cast-iron pipe sleeves. Size sleeves to allow for 1-inch annular clear space between raceway or cable and sleeve for installing mechanical sleeve seals.

3.3 SLEEVE-SEAL INSTALLATION

A. Install to seal exterior wall penetrations

B. Use type and number of sealing elements recommended by manufacturer for raceway or cable material and size. Position raceway or cable in center of sleeve. Assemble mechanical sleeve seals and install in annular space between raceway or cable and sleeve. Tighten bolts against pressure plates that cause sealing elements to expand and make watertight seal.

3.4 FIRESTOPPING

A. Apply firestopping to penetrations of fire-rated floor and wall assemblies for electrical installations to restore original fire-resistance rating of assembly. Firestopping materials and installation requirements are specified in Division 07 Section “Firestopping” Section.

3.5 EXPANSION JOINTS

A. Provide expansion joints and fittings at the platform expansions to comply with the 2005 National Electrical Code Article 300.7 (B) and as recommended and required by the structural engineer. Contractor shall provide a shop drawing to the electrical and structural engineers for review before installation.

B. Expansion Joint shall conform to the following: Type XJG expansion joint used to connect conduits subject to longitudinal movement, including that caused in long runs by thermal expansion and contraction. Shall be PVC exterior coated, urethane interior coating, sealing sleeves on all conduit openings, supplied with required external bonding jumper. Expansion joint shall meet UL Listed Standard 514B and CSA Standard C22.2 No. 18. Size as required.

END OF SECTION 26 05 00

SECTION 260510 – SCOPE OF WORK

PART 1 - GENERAL

1.1 SUMMARY

A. Provide the work included in accordance with the Contract Documents.

B. Provide all labor, materials, equipment, tools, appliances, auxiliaries, services, hoisting, scaffolding, support, supervision, and Project Record Documents, and perform all operations for the furnishing and installing of the complete electrical system, including but not limited to the work described hereinafter. The work shall meet or exceed the latest codes, regulations and requirements of the general conditions to the specifications, Division 26 specifications and drawings submitted.

C. The electrical work is shown schematically on the Drawings to indicate the general system arrangement and configuration. The work of this Division shall include coordination with the work of other Divisions of the Specifications and the Contract Documents so as to provide a complete and operational system capable of being readily operated and maintained, including approved rearrangement of the systems and equipment and rerouting of distribution services to enable the complete system to fit within the confines of the allotted electrical spaces, all to the satisfaction of the Architect/Engineer or as directed by the Architect/Engineer.

D. The work includes, but is not limited to the following: Equipment supports and miscellaneous steel for electrical equipment.

1. As-built drawings (on PDF backgrounds supplied by design engineers or ACAD format).

2. Balancing loads for complete electrical system.

3. Combination starters required for project not supplied by other Divisions (Contractor shall review all divisions and shall be responsible for all work specified or implied) Review all specifications and drawings.

4. Complete 120/208-volt light (based on contract drawings) and power distribution system, including emergency system.

5. Complete electrical job instruction manual. (5 copies)

6. Data and Communication Systems Modifications.

7. Demolition work stated or implied by all divisions.

8. Distribution feeders.

9. Electrical requirements listed in Divisions 1 thru Division 27, Contract Drawings, Project Manual and DOT/MNR Regulations.

10. Equipment supports and miscellaneous steel for electrical equipment. Contractor is responsible for reviewing complete project specifications and project drawings.

11. Exterior structure and building mounted equipment.

12. Field painting.

13. Grounding system. (System shall be redundant and as directed by the Engineer)

14. Installation of Owner furnished equipment.

15. Lighting fixtures, convenience outlet systems and miscellaneous wiring devices.

16. Miscellaneous electrical equipment and systems, unless otherwise noted.

17. Requirements as listed in other Sections of Division 26.

18. Sealing of sleeves and other electrical openings.

19. Seismic bracing of electrical equipment where required by specifications and the State of Connecticut. **Seismic submittal package shall be complete and submitted by Vibra-Conn, Inc., 1-800-379-9119, or equal. (See Section 26 05 48)**

20. Telecommunications system.

21. Platform Lighting.

22. Temporary power and lighting system. (as required and needed to ensure safety)

23. Telephone (MNR) system.

24. Testing, adjusting and calibration (See other sections in Division 26 for requirements)

25. Underground conduit systems.

26. Vibration isolation for the electrical installation.

27. Expansion Joints and Fittings.

28. Wiring, conduit and connections between controllers and equipment.

29. Digital photographs of all concealed work.

30. Shop drawings as required by specifications and in this section.

    a. Shop drawing submittals shall consist of ten (10) sets. Only originals or clean copies will be accepted. Faxed copies will not be accepted. Shop drawings shall be submitted by specification section and be complete.

    b. The following shop drawings shall be submitted as a minimum. Please refer to other sections in Division 26 for additional shop drawing requirements.

        1. Assistance alarm.

        2. Communications systems including riser & connection diagram

3. Lighting fixtures (Manufacturer Cut Sheets) showing all photometric and other technical data. Point to point drawings required on all exterior/site lighting.

4. Modifications to drawings supplied.

5. Lighting and power panels, service entrance equipment, short circuit analysis & coordination study

6. Safety switches, circuit breakers, fuses, etc.

7. Wiring, conduit, wiring devices and misc. fitting and boxes.

8. See other Division 26 Sections for additional requirements.

9. Grounding system & reports per section 26 05 26.

10. Sound (MNR PA) systems riser and connection diagrams.

11. Security, telephone, cable systems, risers and connection diagrams as required.

12. Grounding between old & new railings and as directed by the Engineer at no extra cost to the contract.

13. VMS System (MNR)

14. Railroad Telephone System (MNR)

31. Codes and Standards

a. The Codes and Standards listed below apply to all electrical Work. Where Codes or Standards are mentioned in these Specifications, follow the latest edition or revision:

IES - Lighting Handbook
NEMA - Standards
ANSI C1 - National Electrical Code (NFPA 70)
ANSI C50 - Rotating Electrical Machinery
ANSI C51.1 - Construction & Guide for Selection, Installation and Use of Electric Motors
ANSI C52.1 - Motors and Generators (NEMA MG1)
FIPS Publication #94 - Guideline on Electrical Power for ADP Installations

b. The current adopted editions of the following State or local Codes apply:

2005 National Electric Code, NFPA 70 (NEC)
International Building Code/2003 (ICC)
International Mechanical Code/2003 (ICC)
International Plumbing Code/2003 (ICC)
Connecticut Supplement/2005/State Building Code/ 2005 CSBC/2009 Amendment
2005 Connecticut State Fire Safety Code

Local Authorities Having Jurisdiction (AHJ)
ICC/ANSI A 117.1/2003 Accessible and Usable Buildings and Facilities
O.S.H.A. Regulations
Americans with Disabilities Act, ADA Requirements (Public Law 101-336)
International Existing Building Code/2003(ICC)
International Energy Conservation Code 2009 (IECC) as adopted by CT Amendments
DOT Regulations and Standards

c. The following abbreviations are used within these Specifications:

IES - Illuminating Engineering Society
NEC - National Electrical Code
ANSI - American National Standards Institute
ASTM - American Society for Testing and Materials
EPA - Environmental Protection Agency
IEEE - Institute of Electrical and Electronic Engineers
NEMA - National Electrical Manufacturers Association
NFPA - National Fire Protection Association
OSHA - Occupational Safety and Health Administration
UL - Underwriters' Laboratories

d. All materials furnished and all Work installed comply with the rules and recommendations of the NFPA, the requirements of the local utility companies, the recommendations of the fire insurance rating organization having jurisdiction and with the requirements of all Governmental departments having jurisdiction.

e. Include in the Work, without extra cost to the Owner, any labor, materials, services, apparatus and drawings in order to comply with all applicable laws, ordinances, rules and regulations whether or not shown on Drawings and/or specified.

32. The Contractor shall include in the work, without extra cost to the Owner, any labor, materials, apparatus, and drawing additions to the Contract Drawings and Documents in order to comply with all applicable Codes, Ordinances, Rules and Regulations, whether or not shown on the drawings or indicated.

33. All work shall be performed in a neat and workmanlike manner, with due regard for good practice and best finished appearance.

34. Where such acceptable substitution or deviation requires different quantity or arrangement of foundations, supports, ductwork, piping, wiring, conduit, and any other equipment or accessories normal to this equipment, furnish said changes and additions and pay all changes to the work and the work of others affected by this substitution or deviation. Deviations mean the use of any listed acceptable manufacturer other than those on which the drawings are based.

35. The checking of the shop drawings and samples and the use of the review stamp will be only for conformance with the design concept. The review stamp does not indicate acceptance of every detail of the drawings nor the work methods indicated thereon. Shop drawings will not be accepted for review unless they are stamped and signed as having been fully coordinated with all trades. The review stamp does not relieve the Contractor of the responsibility to comply with all the requirements of this Specification.

36. It is the intent of the Specifications and Drawings to call for finished work, tested and ready for operation.

37. The Contractor shall guarantee all materials, equipment and apparatus and workmanship furnished by him to be free from all defects and agrees to replace at his own expense, at any time within (2) year from the date of acceptance by the Owner, all defective parts that may be found. **At job completion, the Contractor shall submit certification of Guarantee to the Owner and Engineer on contractor's letterhead.**

38. Upon completion of all work and all tests, Contractor shall furnish the necessary skilled labor and helpers for operating his system and equipment. During this period, instruct the Owner or his representative fully in the operation, adjustment and maintenance of all equipment furnished. **There shall be a minimum of 2-1 hour trainings per system.** This shall be completed and signed off by owner's maintenance staff and engineer.

39. Contractor shall furnish to the Engineer five (5) complete bound sets of typewritten or copied instructions for operating and maintaining all systems included in this contract. All manuals shall be submitted in draft, for approval, prior to final issue. Manufacturing advertising literature will not be acceptable. Only technical bulletins will be considered for the maintenance manual. All shop drawings shall be part of this manual.

40. All switches, starters, circuit breakers, panel boards and other electrical apparatus shall be permanently and neatly identified, clearly legible. All characteristics shall be in a sharply contrasting color to the background surface. All panel boards shall be provided with a neatly typed schedule at the time of final inspection. (see sample at end of this section).

41. Free-hand lettering shall not be acceptable. Engraved laminated labels with stainless steel screw mounting shall be used. All plates shall identify panel and circuit number for switches and receptacles.

42. Each piece of equipment shall be identified with the following:

    1. Name or title of equipment i.e., (LP-3).

    2. Voltage and phase of power source(s) within.

43. **All electrical conduits for the following systems (including conduit above hung ceilings) shall be identified with semi-rigid identification markers equal to "SETMARK" electrical markers as manufactured by Seton Name Plate Co.**

    1. Communications Systems
    2. Emergency Systems
    3. Feeders
    4. Lighting
    5. Power
    6. Voltage Levels

44. Each marker background shall be color coded with a clearly printed legend to identify the conductor. Size of markers and lettering to generally conform with the "Scheme for Identification of Piping Systems" (ANSI A13.1-1975).

45. Locations for electrical markers to be as follows:

    1. Panel boards.
    2. On all horizontal runs - marked every 20 feet and at supply and termination points.

46. Minimum Size: ¾ inch unless otherwise specified.

47. Underground Installations:

    1. More than Five Feet from Foundation Wall: Use plastic conduit. (Schedule 80 PVC)
    2. Within Five Feet from Foundation Wall: Use rigid steel conduit.
    3. In or Under Slab on Grade: Use rigid steel conduit. All exposed conduit through concrete shall be rigid steel.

48. Outdoor Locations, Above Grade: Use rigid steel conduit with PVC Coating.

49. In Slab Above Grade:

    1. Use rigid steel conduit with PVC Coating.

50. Wet and Damp Locations: Rigid steel conduit with PVC Coating.

51. Dry Locations:

1. Exposed: Use rigid steel conduit with PVC Coating.

52. Use flexible metallic conduits only in dry indoor locations for not more than 3 feet.

53. Use Liquid Tight ONLY where specified on drawings.

54. **Provide wire markers on each conductor in panel board gutters, pull boxes, outlet and junction boxes, and at load connection.** Identify with branch circuit or feeder number for power and lighting circuits, and with control wire number as indicated on equipment manufacturer's shop drawings for control wiring.

55. Use Seton Style No. M4883 to identify conduit system within panels.

56. Emergency Systems: Identification by name: fire alarm, etc: Red background.

THE USE OF SPRAY PAINT IS NOT ALLOWED

THE USE OF FREEHAND WRITING IS NOT ALLOWED

THE USE OF STRING AND PAPER AND CARD STOCK IS NOT ALLOWED

PART 2 - ELECTRICAL MOUNTING HEIGHTS

2.1 HEIGHTS

A. Refer to drawings: However, if no other instructions or information is given, the Contractor shall submit an RFI to Architect/Engineer for a reply in writing.

PART 3 - ELECTRICAL & COMMUNICATIONS RESPONSIBILITIES

3.1 RESPONSIBILITIES

A. Removal & Disposal of Light Pole and Fixtures: Contractor
B. Replacement of Platform PA system except for final connections: Contractor
C. Final connections for Platform PA system: MNR
D. Relocation of Platform pay station/kiosk: Contractor
E. Final connection of pay station/kiosk: Contractor (with coordination with Town of Greenwich)
F. Removal & Disposal of electrical service cabinets: Contractor
G. Installation/Final Connection of new wiring for DLC cabinet: MNR
H. Installation/Final Connection of new wiring for PA cabinet: MNR
I. Replacement of Platform Railroad Telephone system except for final connections: Contractor
J. Final connections for Platform Railroad Telephone System: MNR
K. Replacement of Platform VMS system except for final connections: Contractor
L. Final connections for Platform VMS System: MNR
M. Installation of new Lighting, Power System & Wiring: Contractor
N. New Electrical Pads for Electrical Equipment: Contractor
O. Installation of Grounding and Bonding System: Contractor

END OF SECTION

SECTION 260515 – ELECTRICAL DEMOLITION

PART 1 - GENERAL

1.1 REFERENCE

A. Electrical demolition as shown and/or as required by the project drawings.

B. No extra compensation shall be allowed for additional demolition needed/implied in Project Drawings and the Project Manual.

PART 2 - PRODUCTS

2.1 MATERIALS AND EQUIPMENT

A. Materials and equipment for patching and extending work: As specified and/or implied.

PART 3 - EXECUTION

3.1 EXAMINATION

A. Verify field measurements and circuiting arrangements.

B. Verify that abandoned wiring and equipment serves only abandoned facilities.

C. Demolition is based on General Contract requirements and architectural drawing. Report discrepancies to Architect/Engineer before disturbing existing installations.

D. Beginning of demolition means the Contractor accepts the existing conditions.

3.2 PREPARATION

A. Disconnect electrical systems within the contract limit lines and the General Contractor requirements.

B. Coordinate utility service outages with Utility Company (CL & P) as required and with General Contractor.

C. Provide temporary wiring and connections to maintain existing systems in service during construction. When work must be performed on energized equipment or circuits, use personnel experienced in such operations and required personal protective equipment and clothing.

D. Existing Electrical Service: Maintain existing system in service until the new service is made operational. Disable system only to make switchovers and connections. Obtain permission from Architect/Engineer at least 48 hours before partially or completely disabling system. Minimize all outage durations. Make temporary connections to maintain service in areas adjacent to work area.

E. Existing Emergency Lighting: Maintain existing system in service (if required). Disable system only to make switchovers and connections. Notify Architect/Engineer and General Contractor at least 24 hours before partially or completely disabling system. Minimize outage duration. Make temporary connections to maintain service in areas adjacent to work area.

3.3 DEMOLITION AND EXTENSION OF EXISTING ELECTRICAL WORK

A. Demolish and/or extend existing electrical work under provisions of the Project Manual and Design Drawings.

B. Remove, relocate, and extend existing installations to accommodate new construction.

C. Remove abandoned wiring to the source of supply.

D. Remove exposed abandoned conduit. Cut conduit flush with ground level, and patch surfaces.

E. Disconnect any abandoned outlets and remove devices. Remove abandoned outlets if conduit servicing them is abandoned and removed.

F. Disconnect and remove any electrical devices and equipment serving utilization equipment that has been removed.

G. Disconnect and remove any abandoned luminaries. Remove brackets, stems, hangers, and other accessories.

H. Disconnect and remove any electrical devices and equipment servicing utilization equipment that has been removed.

I. Maintain access to existing electrical installations which remain active. Modify installation or provide access panel appropriately.

J. Extend existing installations using materials and methods as specified.

3.4 CLEANING AND REPAIR

A. Clean and repair new and existing materials and equipment, which will remain or are to be reused.

B. Panel boards: Clean exposed surfaces and check tightness of electrical connections. Replace all circuit breakers and provide closure plates for vacant positions. Provide typed circuit directories showing new circuiting arrangements. **A copy of the directories shall be submitted to the owner and the engineer for their records.**

3.5 INSTALLATION

A. Install relocated materials and equipment if indicated on the Project Drawings and Project Manual.

3.6 STORAGE OF REMOVED EQUIPMENT

A. Contractor shall store electrical items at a location designated by DOT and the construction manager, and the engineer and construction manager shall indicate items to be disposed of by the contractor. Contractor shall be responsible for a storage list.

B. Electrical Contractor shall dispose of unwanted electrical equipment, fluorescent fixtures including fixtures containing ballast that are not labeled as having “no PCB”. The Contractor shall be responsible for disposing of the fixtures at no additional cost to the owner and shall dispose of the ballast in the fixture as required by state of Connecticut state law.

END OF SECTION

SECTION 260519 - LOW-VOLTAGE ELECTRICAL POWER CONDUCTORS AND CABLES

PART 1 - GENERAL

1.1 RELATED DOCUMENTS

A. The Project Manual, Project Drawings and general provisions of the Contract shall apply to this Section.

1.2 SUMMARY

A. This Section includes the following:

1. Building wires and cables rated 600 V and less.
2. Connectors, splices, and terminations rated 600 V and less.

1.3 DEFINITIONS

A. EPDM: Ethylene-propylene-diene terpolymer rubber.

B. NBR: Acrylonitrile-butadiene rubber.

C. Low Voltage - 600 Volts or Less

1.4 ACTION SUBMITTALS

A. Product Data: For each type of product indicated.

1.5 INFORMATIONAL SUBMITTALS

A. Qualification Data: For testing agency.

B. Field quality-control test reports.

1.6 QUALITY ASSURANCE

A. Electrical Components, Devices, and Accessories: Listed and labeled as defined in NFPA 70, Article 100, by a testing agency acceptable to authorities having jurisdiction, and marked for intended use.

B. Comply with NFPA 70.

PART 2 - PRODUCTS

2.1 CONDUCTORS AND CABLES

A. Available Manufacturers: Subject to compliance with requirements, manufacturers offering products that may be incorporated into the Work include, but are not limited to, the following:

B. Manufacturers: Subject to compliance with requirements, provide products by one of the following:

1. Alcan Products Corporation; Alcan Cable Division.
2. American Insulated Wire Corp.; a Leviton Company.
3. General Cable Corporation.
4. Southwire Company.

C. Copper Conductors: Comply with NEMA WC 70.

D. Conductor Insulation: Comply with NEMA WC 70 for Types THHN-THWN, XHHW.

2.2 CONNECTORS AND SPLICES

A. Available Manufacturers: Subject to compliance with requirements, manufacturers offering products that may be incorporated into the Work include, but are not limited to, the following:

B. Manufacturers: Subject to compliance with requirements, provide products by one of the following:

1. AFC Cable Systems, Inc.
2. Hubbell Power Systems, Inc.
3. O-Z/Gedney; EGS Electrical Group LLC.
4. 3M; Electrical Products Division.

C. Description: Factory-fabricated connectors and splices of size, ampacity rating, material, type, and class for application and service indicated.

PART 3 - EXECUTION

3.1 CONDUCTOR MATERIAL APPLICATIONS

A. Feeders: Copper Solid for No. 10 AWG and smaller; stranded for No. 8 AWG and larger.

B. Branch Circuits: Copper. Solid for No. 10 AWG and smaller; stranded for No. 8 AWG and larger.

3.2 CONDUCTOR INSULATION AND MULTICONDUCTOR CABLE APPLICATIONS AND WIRING METHODS

A. Service Entrance: Type THHN-THWN, single conductors in raceway, Type XHHW, single conductors in raceway.

B. Exposed Feeders: Type THHN-THWN or XHHW, single conductors in raceway.

C. Feeders Concealed in Concrete, below Slabs-on-Grade, and Underground: Type THHN-THWN, XHHW, single conductors in raceway.

D. Exposed Branch Circuits, Including in Crawlspaces: Type THHN-THWN or XHHW, single conductors in raceway.

E. Branch Circuits Concealed in Concrete, below Slabs-on-Grade, and Underground: Type XHHW, single conductors in raceway.

F. Class 1 Control Circuits: Type THHN-THWN, in raceway.

G. Class 2 Control Circuits: Type THHN-THWN, in raceway.

3.3 INSTALLATION OF CONDUCTORS AND CABLES

A. Conceal conductors in specific tubes as shown on the drawings.

B. Use manufacturer-approved pulling compound or lubricant where necessary; compound used must not deteriorate conductor or insulation. Do not exceed manufacturer's recommended maximum pulling tensions and sidewall pressure values.

C. Use pulling means, including fish tape, cable, rope, and basket-weave wire/cable grips, that will not damage cables or raceway.

D. Install exposed cables parallel and perpendicular to surfaces of exposed structural members, and follow surface contours where possible.

E. Support cables according to Section 260529 "Hangers and Supports for Electrical Systems."

F. Identify and color-code conductors and cables according to Section 260553 "Identification for Electrical Systems."

3.4 CONNECTIONS

A. Tighten electrical connectors and terminals according to manufacturer's published torque-tightening values. If manufacturer's torque values are not indicated, use those specified in UL 486A and UL 486B.

B. Make splices and taps that are compatible with conductor material and that possess equivalent or better mechanical strength and insulation ratings than unspliced conductors.

1. Use oxide inhibitor in each splice and tap conductor for aluminum conductors.

C. Wiring at Outlets: Install conductor at each outlet, with at least 8 inches of slack.

3.5 FIELD QUALITY CONTROL

A. Testing Agency: Owner may engage a qualified testing agency to perform tests and inspections and prepare test reports.

B. Perform tests and inspections and prepare test reports.

C. Tests and Inspections:

1. After installing conductors and cables and before electrical circuitry has been energized, test service entrance and feeder conductors, and conductors feeding the following critical equipment and services for compliance with requirements.

2. Perform each visual and mechanical inspection and electrical test stated in NETA Acceptance Testing Specification. Certify compliance with test parameters.
3. Infrared Scanning: After Substantial Completion, but not more than 60 days after Final Acceptance, perform an infrared scan of each splice in cables and conductors No. 3 AWG and larger. Remove box and equipment covers so splices are accessible to portable scanner.

    a. Follow-up Infrared Scanning: Perform an additional follow-up infrared scan of each splice 11 months after date of Substantial Completion.
    b. Instrument: Use an infrared scanning device designed to measure temperature or to detect significant deviations from normal values. Provide calibration record for device.
    c. Record of Infrared Scanning: Prepare a certified report that identifies splices checked and that describes scanning results. Include notation of deficiencies detected, remedial action taken, and observations after remedial action.

D. Test Reports: Prepare a written report to record the following:

1. Test procedures used.
2. Test results that comply with requirements.
3. Test results that do not comply with requirements and corrective action taken to achieve compliance with requirements.

E. Remove and replace malfunctioning units and retest as specified above.

END OF SECTION 260519

SECTION 260526 - GROUNDING AND BONDING FOR ELECTRICAL SYSTEMS

PART 1 - GENERAL

1.1 RELATED DOCUMENTS

A. The Project Manual, Project Drawings and general provisions of the Contract shall apply to this Section.

1.2 SUMMARY

A. Section Includes: Grounding systems and equipment.

B. Section includes grounding systems and equipment, plus the following special applications:

1. Underground distribution grounding.
2. Bonding of above ground.

1.3 SUBMITTALS

A. Product Data: For each type of product indicated.

1.4 INFORMATIONAL SUBMITTALS

A. Informational Submittals: Plans showing dimensioned as-built locations of grounding features specified in "Field Quality Control" Article, including the following:

1. Ground rods.
2. Grounding arrangements and connections for separately derived systems.
3. Grounding for sensitive electronic equipment.

B. Qualification Data: For qualified testing agency and testing agency's field supervisor.

C. Field quality-control reports.

1.5 CLOSEOUT SUBMITTALS

A. Operation and Maintenance Data: For grounding to include in emergency, operation, and maintenance manuals. In addition to items specified in Section 017823 "Operation and Maintenance Data," include the following:

1. Instructions for periodic testing and inspection of grounding features at grounding connections for separately derived systems based on NFPA 70B.

a. Tests shall determine if ground-resistance or impedance values remain within specified maximums, and instructions shall recommend corrective action if values do not.
b. Include recommended testing intervals.

1.6 QUALITY ASSURANCE

A. Testing Agency Qualifications: Member company of NETA or an NRTL.

1. Testing Agency's Field Supervisor: Currently certified by NETA to supervise on-site testing.

B. Electrical Components, Devices, and Accessories: Listed and labeled as defined in NFPA 70, by a qualified testing agency, and marked for intended location and application.

C. Comply with UL 467 for grounding and bonding materials and equipment.

PART 2 - PRODUCTS

2.1 CONDUCTORS

A. Insulated Conductors: Copper wire or cable insulated for 600 V unless otherwise required by applicable Code or authorities having jurisdiction.

B. Bare Copper Conductors:

1. Solid Conductors: ASTM B 3.
2. Stranded Conductors: ASTM B 8.
3. Tinned Conductors: ASTM B 33.
4. Bonding Cable: 28 kcmil, 14 strands of No. 17 AWG conductor, 1/4 inch in diameter.
5. Bonding Conductor: No. 4 or No. 6 AWG, stranded conductor.
6. Bonding Jumper: Copper tape, braided conductors terminated with copper ferrules; 1-5/8 inches wide and 1/16 inch thick.
7. Tinned Bonding Jumper: Tinned-copper tape, braided conductors terminated with copper ferrules; 1-5/8 inches wide and 1/16 inch thick.

C. Bare Grounding Conductor and Conductor Protector for Wood Poles:

1. No. 4 AWG minimum, soft-drawn copper.
2. Conductor Protector: Half-round PVC or wood molding; if wood, use pressure-treated fir, cypress, or cedar.

D. Grounding Bus: Predrilled rectangular bars of annealed copper, 1/4 by 4 inches in cross section, with 9/32-inch holes spaced 1-1/8 inches apart. Stand-off insulators for mounting shall comply with UL 891 for use in switchboards, 600 V. Lexan or PVC, impulse tested at 5000 V.

2.2 CONNECTORS

A. Listed and labeled by an NRTL acceptable to authorities having jurisdiction for applications in which used and for specific types, sizes, and combinations of conductors and other items connected.

B. Bolted Connectors for Conductors and Pipes: Copper or copper alloy, pressure type with at least two bolts.

1. Pipe Connectors: Clamp type, sized for pipe.

C. Welded Connectors: Exothermic-welding kits of types recommended by kit manufacturer for materials being joined and installation conditions.

D. Bus-bar Connectors: Mechanical type, cast silicon bronze, solder less compression or exothermic - type wire terminals, and long-barrel, two-bolt connection to ground bus bar.

2.3 GROUNDING ELECTRODES

A. Ground Rods: 3/4 inch by 10 feet in diameter.

B. Chemical-Enhanced Grounding Electrodes: Copper tube, straight or L-shaped, charged with nonhazardous electrolytic chemical salts.

1. Termination: Factory-attached No. 4/0 AWG bare conductor at least 48 inches long.
2. Backfill Material: Electrode manufacturers recommended material.

PART 3 - EXECUTION

3.1 APPLICATIONS

A. Conductors: Install stranded conductor for No. 8 AWG and smaller, and stranded conductors for No. 6 AWG and larger unless otherwise indicated.

B. Underground Grounding Conductors: Install bare copper conductor, No. 2/0 AWG minimum.

1. Bury at least 24 inches below grade.

C. Isolated Grounding Conductors: Green-colored insulation with continuous yellow stripe. On feeders with isolated ground, identify grounding conductor where visible to normal inspection, with alternating bands of green and yellow tape, with at least three bands of green and two bands of yellow.

D. Grounding Bus: Install in electrical and telephone equipment, housing service equipment, and elsewhere as indicated.

1. Install bus on insulated spacers 2 inches minimum from back 6 inches above finished floor unless otherwise indicated.

E. Conductor Terminations and Connections:

1. Pipe and Equipment Grounding Conductor Terminations: Bolted connectors.
2. Underground Connections: Welded connectors except at test wells and as otherwise indicated.
3. Connections to Ground Rods at Test Wells: Bolted connectors.
4. Connections to Structural Steel: Welded connectors.

3.2 GROUNDING OVERHEAD LINES

A. Comply with IEEE C2 grounding requirements.

B. Install two parallel ground rods if resistance to ground by a single, ground-rod electrode exceeds 25 ohms.

C. Drive ground rods until tops are 12 inches below finished grade in undisturbed earth.

D. Ground-Rod Connections: Install bolted connectors for underground connections and connections to rods.

E. Lightning Arrester Grounding Conductors: Separate from other grounding conductors.

F. Secondary Neutral and Transformer Enclosure: Interconnect and connect to grounding conductor.

G. Protect grounding conductors running on surface of wood poles with molding extended from grade level up to and through communication service and transformer spaces.

3.3 GROUNDING UNDERGROUND DISTRIBUTION SYSTEM COMPONENTS

A. Comply with IEEE C2 grounding requirements.

B. Grounding Manholes and Hand holes: Install a driven ground rod through manhole or hand hole floor, close to wall, and set rod depth so 4 inches will extend above finished floor. If necessary, install ground rod before manhole is placed and provide No. 1/0 AWG bare, tinned-copper conductor from ground rod into manhole through a waterproof sleeve in manhole wall. Protect ground rods passing through concrete floor with a double wrapping of pressure-sensitive insulating tape or heat-shrunk insulating sleeve from 2 inches above to 6 inches below concrete. Seal floor opening with waterproof, non-shrink grout.

C. Grounding Connections to Manhole Components: Bond exposed-metal parts such as inserts, cable racks, pulling irons, ladders, and cable shields within each manhole or hand hole, to ground rod or grounding conductor. Make connections with No. 4 AWG minimum, stranded, hard-drawn copper bonding conductor. Train conductors level or plumb around corners and fasten to manhole walls. Connect to cable armor and cable shields according to written instructions by manufacturer of splicing and termination kits.

D. Pad-Mounted Transformers and Switches: Install two ground rods and ground ring around the pad. Ground pad-mounted equipment and noncurrent-carrying metal items associated with substations by connecting them to underground cable and grounding electrodes. Install tinned-copper conductor not less than No. 2 AWG for ground ring and for taps to equipment grounding terminals. Bury ground ring not less than 6 inches from the foundation.

3.4 EQUIPMENT GROUNDING

A. Install insulated equipment grounding conductors with all feeders and branch circuits.

B. Install insulated equipment grounding conductors with the following items, in addition to those required by NFPA 70:

1. Feeders and branch circuits.
2. Lighting circuits.
3. Receptacle circuits.
4. Flexible raceway runs.

5. Busway Supply Circuits: Install insulated equipment grounding conductor from grounding bus in the switchgear, switchboard, or distribution panel to equipment grounding bar terminal on busway.

C. Isolated Grounding Receptacle Circuits: Install an insulated equipment grounding conductor connected to the receptacle grounding terminal. Isolate conductor from raceway and from panelboard grounding terminals. Terminate at equipment grounding conductor terminal of the applicable derived system or service unless otherwise indicated.

D. Isolated Equipment Enclosure Circuits: For designated equipment supplied by a branch circuit or feeder, isolate equipment enclosure from supply circuit raceway with a nonmetallic raceway fitting listed for the purpose. Install fitting where raceway enters enclosure, and install a separate insulated equipment grounding conductor. Isolate conductor from raceway and from panelboard grounding terminals. Terminate at equipment grounding conductor terminal of the applicable derived system or service unless otherwise indicated.

E. Signal and Communication Equipment: In addition to grounding and bonding required by NFPA 70, provide a separate grounding system complying with requirements in TIA/ATIS J-STD-607-A.

1. For telephone, alarm, voice and data, and other communication equipment, provide No. 4 AWG minimum insulated grounding conductor in raceway from grounding electrode system to each service location, terminal cabinet, wiring closet, and central equipment location.
2. Service and Central Equipment Locations and Wiring Closets: Terminate grounding conductor on a 1/4-by-4-by-12-inchgrounding bus.
3. Terminal Cabinets: Terminate grounding conductor on cabinet grounding terminal.

F. Metal Poles Supporting Outdoor Lighting Fixtures: Install grounding electrode and a separate insulated equipment grounding conductor in addition to grounding conductor installed with branch-circuit conductors.

3.5 INSTALLATION

A. Grounding Conductors: Route along shortest and straightest paths possible unless otherwise indicated or required by Code. Avoid obstructing access or placing conductors where they may be subjected to strain, impact, or damage.

B. Ground Bonding Common with Lightning Protection System: Comply with NFPA 780 and UL 96 when interconnecting with lightning protection system. Bond electrical power system ground directly to lightning protection system grounding conductor at closest point to electrical service grounding electrode. Use bonding conductor sized same as system grounding electrode conductor, and install in conduit.

C. Ground Rods: Drive rods until tops are 2 inches below finished floor or final grade unless otherwise indicated.

1. Interconnect ground rods with grounding electrode conductor below grade and as otherwise indicated. Make connections without exposing steel or damaging coating if any.

2. For grounding electrode system, install at least three rods spaced at least one-rod length from each other and located at least the same distance from other grounding electrodes, and connect to the service grounding electrode conductor.

D. Bonding Straps and Jumpers: Install in locations accessible for inspection and maintenance except where routed through short lengths of conduit.

1. Bonding to Structure: Bond straps directly to basic structure, taking care not to penetrate any adjacent parts.
2. Bonding to Equipment Mounted on Vibration Isolation Hangers and Supports: Install bonding so vibration is not transmitted to rigidly mounted equipment.
3. Use exothermic-welded connectors for outdoor locations; if a disconnect-type connection is required, use a bolted clamp.

E. Bonding Interior Metal Ducts: Bond metal air ducts to equipment grounding conductors of associated fans, blowers, electric heaters, and air cleaners. Install bonding jumper to bond across flexible duct connections to achieve continuity.

F. Grounding for Steel Building Structure: Install a driven ground rod at base of each corner column and at intermediate exterior columns at distances not more than 60 feet apart.

G. Ground Ring: Install a grounding conductor, electrically connected to each building structure ground rod and to each steel column, extending around the perimeter of the building at two (2) locations at opposite ends.

1. Install tinned-copper conductor not less than No. 2/0 AWG for ground ring and for taps to building steel.
2. Bury ground ring not less than 24 inches from building's foundation.

H. Ufer Ground (Concrete-Encased Grounding Electrode): Fabricate according to NFPA 70; use a minimum of 20 feet of bare copper conductor not smaller than No. 4 AWG.

1. If concrete foundation is less than 20 feet long, coil excess conductor within base of foundation.
2. Bond grounding conductor to reinforcing steel in at least four locations and to anchor bolts. Extend grounding conductor below grade and connect to building's grounding grid or to grounding electrode external to concrete.

3.6 LABELING

A. Comply with requirements in Section 260553 "Identification for Electrical Systems" for instruction signs. The label or its text shall be green.

B. Install labels at the telecommunications bonding conductor and grounding equalizer and at the grounding electrode conductor where exposed.

1. Label Text: "If this connector or cable is loose or if it must be removed for any reason, notify the facility manager."

3.7 FIELD QUALITY CONTROL

A. Testing Agency: Owner may engage a qualified testing agency to perform tests and inspections.

B. Manufacturer's Field Service: Engage a factory-authorized service representative to inspect, test, and adjust components, assemblies, and equipment installations, including connections.

C. Perform tests and inspections.

1. Manufacturer's Field Service: Engage a factory-authorized service representative to inspect components, assemblies, and equipment installations, including connections, and to assist in testing.

D. Tests and Inspections:

1. After installing grounding system but before permanent electrical circuits have been energized, test for compliance with requirements.
2. Inspect physical and mechanical condition. Verify tightness of accessible, bolted, electrical connections with a calibrated torque wrench according to manufacturer's written instructions.
3. Test completed grounding system at each location where a maximum ground-resistance level is specified, at service disconnect enclosure grounding terminal**,** and at individual ground rods. Make tests at ground rods before any conductors are connected.

   a. Measure ground resistance no fewer than two full days after last trace of precipitation and without soil being moistened by any means other than natural drainage or seepage and without chemical treatment or other artificial means of reducing natural ground resistance.
   b. Perform tests by fall-of-potential method according to IEEE 81.

4. Prepare dimensioned Drawings locating each test well, ground rod and ground-rod assembly, and other grounding electrodes. Identify each by letter in alphabetical order, and key to the record of tests and observations. Include the number of rods driven and their depth at each location, and include observations of weather and other phenomena that may affect test results. Describe measures taken to improve test results.

E. Grounding system will be considered defective if it does not pass tests and inspections.

F. Prepare test and inspection reports.

G. Report measured ground resistances that exceed the following values:

1. Power and Lighting Equipment or System with Capacity of 500 kVA and less: 10 ohms.
2. Power and Lighting Equipment or System with Capacity of 500 to 1000 kVA: 5 ohms.
3. Power and Lighting Equipment or System with Capacity More Than 1000 kVA: 3 ohms.
4. Power Distribution Units or Panelboards Serving Electronic Equipment: 3 ohm(s).
5. Substations and Pad-Mounted Equipment: 5 ohms.
6. Manhole Grounds: 10 ohms.

H. Excessive Ground Resistance: If resistance to ground exceeds specified values, notify Architect promptly and include recommendations to reduce ground resistance.

END OF SECTION 260526

PART 1 - GENERAL

1.1 RELATED DOCUMENTS

A. Drawings and general provisions of the Contract, including General and Supplementary Conditions and Division 01 Specification Sections, apply to this Section.

1.2 SUMMARY

A. This Section includes the following:

1. Hangers and supports for electrical equipment and systems.
2. Construction requirements for concrete bases.

B. Related Sections include the following:

1. Division 26 Section "Vibration and Seismic Controls for Electrical Systems" for products and installation requirements necessary for compliance with seismic criteria.

1.3 DEFINITIONS

A. IMC: Intermediate metal conduit.

B. RMC: Rigid metal conduit (PVC Coated). (Note: All exposed RMC shall be PVC Coated equal to Plastibond 'Red H2OT')

1.4 PERFORMANCE REQUIREMENTS

A. Delegated Design: Design supports for multiple raceways, including comprehensive engineering analysis by a qualified professional engineer, using performance requirements and design criteria indicated.

B. Design supports for multiple raceways capable of supporting combined weight of supported systems and its contents.

C. Design equipment supports capable of supporting combined operating weight of supported equipment and connected systems and components.

D. Rated Strength: Adequate in tension, shear, and pullout force to resist maximum loads calculated or imposed for this Project, with a minimum structural safety factor of five times the applied force.

1.5 SUBMITTALS

A. Product Data: For the following:

1. Steel slotted support systems.
2. Nonmetallic slotted support systems. (underground only)

B. Shop Drawings: Signed and sealed by a qualified professional engineer. Show fabrication and installation details and include calculations for the following:

1. Conduit Brackets.
2. Steel slotted channel systems. Include Product Data for components.
3. Nonmetallic slotted channel systems. Include Product Data for components.
4. Equipment supports.

C. Welding certificates.

1.6 QUALITY ASSURANCE

A. Welding: Qualify procedures and personnel according to AWS D1.1/D1.1M, "Structural Welding Code - Steel."

B. Comply with NFPA 70.

1.7 COORDINATION

A. Coordinate size and location of concrete bases. Cast anchor-bolt inserts into bases. Concrete, reinforcement, and form work requirements are specified in the Project Manual.

B. Coordinate installation of roof curbs, equipment supports, and roof penetrations. These items are specified in the Project Manual. (Note: All penetrations through the roof or roof support system shall have the architect's approval prior to work being started).

PART 2 - PRODUCTS

2.1 SUPPORT, ANCHORAGE, AND ATTACHMENT COMPONENTS

A. Steel Slotted Support Systems: Comply with MFMA-4, factory-fabricated components for field assembly.

1. Available Manufacturers: Subject to compliance with requirements, manufacturers offering products that may be incorporated into the Work include, but are not limited to, the following:

a. Allied Tube & Conduit.
b. Cooper B-Line, Inc.; a division of Cooper Industries.
c. ERICO International Corporation.
d. GS Metals Corp.
e. Thomas & Betts Corporation.
f. Unistrut; Tyco International, Ltd.
g. Wesanco, Inc.

2. Metallic Coatings: Hot-dip galvanized after fabrication and applied according to MFMA-4.
3. Nonmetallic Coatings: Manufacturer's standard PVC, polyurethane, or polyester coating applied according to MFMA-4.
4. Painted Coatings: Manufacturer's standard painted coating applied according to MFMA-4.
5. Channel Dimensions: Selected for applicable load criteria.

B. Raceway Supports: As described in NECA 1 and NECA 101.

C. Conduit Support Devices: Steel and malleable-iron hangers, clamps, and associated fittings, designed for types and sizes of raceway or cable to be supported. (Note: All individual conduit supports shall be pre painted to match the color of the PVC Coated GRS.

D. Support for Conductors in Vertical Conduit: Factory-fabricated assembly consisting of threaded body and insulating wedging plug or plugs for non-armored electrical conductors or cables in riser conduits. Plugs shall have number, size, and shape of conductor gripping pieces as required to suit individual conductors or cables supported. Body shall be malleable iron.

E. Structural Steel for Fabricated Supports and Restraints: ASTM A 36/A 36M, steel plates, shapes, and bars; black and galvanized.

F. Mounting, Anchoring, and Attachment Components: Items for fastening electrical items or their supports to building surfaces include the following:

1. Powder-Actuated Fasteners: Threaded-steel stud, for use in hardened portland cement concrete, steel, or wood, with tension, shear, and pullout capacities appropriate for supported loads and building materials where used.

   a. Available Manufacturers: Subject to compliance with requirements, manufacturers offering products that may be incorporated into the Work include, but are not limited to, the following:

      1) Hilti Inc.
      2) ITW Ramset/Red Head; a division of Illinois Tool Works, Inc.
      3) MKT Fastening, LLC.
      4) Simpson Strong-Tie Co., Inc.; Masterset Fastening Systems Unit.

2. Mechanical-Expansion Anchors: Insert-wedge-type, zinc-coated steel, for use in hardened portland cement concrete with tension, shear, and pullout capacities appropriate for supported loads and building materials in which used.

   a. Available Manufacturers: Subject to compliance with requirements, manufacturers offering products that may be incorporated into the Work include, but are not limited to, the following:

      1) Cooper B-Line, Inc.; a division of Cooper Industries.
      2) Empire Tool and Manufacturing Co., Inc.
      3) Hilti Inc.
      4) ITW Ramset/Red Head; a division of Illinois Tool Works, Inc.
      5) MKT Fastening, LLC.

3. Concrete Inserts: Steel or malleable-iron, slotted support system units similar to MSS Type 18; complying with MFMA-4 or MSS SP-58.
4. Clamps for Attachment to Steel Structural Elements: MSS SP-58, type suitable for attached structural element.
5. Through Bolts: Structural type, hex head, and high strength. Comply with ASTM A 325.
6. Toggle Bolts: All-steel springhead type.
7. Hanger Rods: Threaded steel.

2.2 FABRICATED METAL EQUIPMENT SUPPORT ASSEMBLIES

A. Description: Welded or bolted, structural-steel shapes, shop or field fabricated to fit dimensions of supported equipment.

B. Materials: Comply with requirements in Division 05 Section "Metal Fabrications" for steel shapes and plates.

PART 3 - EXECUTION

3.1 APPLICATION

A. Comply with NECA 1 and NECA 101 for application of hangers and supports for electrical equipment and systems except if requirements in this Section are stricter.

B. Multiple Raceways: Install trapeze-type supports fabricated with steel slotted support system, sized so capacity can be increased by at least 25 percent in future without exceeding specified design load limits.

1. Secure raceways and cables to these supports with single-bolt conduit clamps using spring friction action for retention in support channel.

3.2 SUPPORT INSTALLATION

A. Comply with NECA 1 and NECA 101 for installation requirements except as specified in this Article.

B. Raceway Support Methods: In addition to methods described in NECA 1, EMT, IMC, and RMC may be supported by openings through structure members, as permitted in NFPA 70.

C. Strength of Support Assemblies: Where not indicated, select sizes of components so strength will be adequate to carry present and future static loads within specified loading limits. Minimum static design load used for strength determination shall be weight of supported components plus 200 lb.

D. Mounting and Anchorage of Surface-Mounted Equipment and Components: Anchor and fasten electrical items and their supports to building structural elements by the following methods unless otherwise indicated by code:

1. To New Concrete: Bolt to concrete inserts.
2. To Masonry: Approved toggle-type bolts on hollow masonry units and expansion anchor fasteners on solid masonry units.
3. To Existing Concrete: Expansion anchor fasteners.
4. Instead of expansion anchors, powder-actuated driven threaded studs provided with lock washers and nuts may be used in existing standard-weight concrete 4 inches thick or greater. Do not use for anchorage to lightweight-aggregate concrete or for slabs less than 4 inches thick.
5. To Steel: Beam clamps (MSS Type 19, 21, 23, 25, or 27) complying with MSS SP-69.
6. To Light Steel: Sheet metal screws.
7. Items Mounted on Hollow Walls and Nonstructural Building Surfaces: Mount cabinets, panelboards, disconnect switches, control enclosures, pull and junction boxes, transformers, and other devices on slotted-channel racks attached to substrate by means that meet seismic-restraint strength and anchorage requirements.

E. Drill holes for expansion anchors in concrete at locations and to depths that avoid reinforcing bars.

3.3 INSTALLATION OF FABRICATED METAL SUPPORTS

A. Comply with installation requirements in Division 05 Section "Metal Fabrications" for site-fabricated metal supports.

B. Cut, fit, and place miscellaneous metal supports accurately in location, alignment, and elevation to support and anchor electrical materials and equipment.

C. Field Welding: Comply with AWS D1.1/D1.1M.

3.4 CONCRETE BASES

A. Construct concrete bases of dimensions indicated but not less than 4 inches larger in both directions than supported unit, and so anchors will be a minimum of 10 bolt diameters from edge of the base.

B. Use 3000-psi, 28-day compressive-strength concrete. Concrete materials, reinforcement, and placement requirements are specified in Division 03 Section " Cast-in-Place Concrete (Limited Applications)."

C. Anchor equipment to concrete base.

1. Place and secure anchorage devices. Use supported equipment manufacturer's setting drawings, templates, diagrams, instructions, and directions furnished with items to be embedded.
2. Install anchor bolts to elevations required for proper attachment to supported equipment.
3. Install anchor bolts according to anchor-bolt manufacturer's written instructions.

3.5 PAINTING

A. Touchup: Clean field welds and abraded areas of shop paint. Paint exposed areas immediately after erecting hangers and supports. Use same materials as used for shop painting. Comply with SSPC-PA 1 requirements for touching up field-painted surfaces.

1. Paint specifications shall be the responsibility of the architect.

B. Galvanized Surfaces: Clean welds, bolted connections, and abraded areas and apply galvanizing-repair paint to comply with ASTM A 780.

1. Paint specifications shall be the responsibility of the architect.

END OF SECTION 260529

PART 1 - GENERAL

1.1 SUMMARY

A. This Section includes raceways, fittings, boxes, enclosures, and cabinets for electrical wiring and equipment.

B. See Division 26 Section "Underground Ducts and Raceways for Electrical Systems" for exterior duct banks and manholes, and underground handholes, boxes, and utility construction.

1.2 SUBMITTALS

A. Product Data: For surface raceways, wire ways and fittings, floor boxes, hinged-cover enclosures, and cabinets.

B. Shop Drawings: For custom enclosures and cabinets. Include plans, elevations, sections, details, and attachments to other work.

1.3 QUALITY ASSURANCE

A. Electrical Components, Devices, and Accessories: Listed and labeled as defined in NFPA 70, Article 100, by a testing agency acceptable to authorities having jurisdiction, and marked for intended use.

B. Comply with NFPA 70.

PART 2 - PRODUCTS

2.1 METAL CONDUIT AND TUBING

A. Rigid galvanized steel, PVC-coated conduit, comply with NEMA RNI, shall be 40 mil dense polyvinyl chloride coating on exterior with cured 2 mil urethane interior. All fittings shall be of same finish. Conduit shall be as manufactured by Plastibond, color shall be coordinated with Architect.

B. Fittings for Conduit: NEMA FB 1; listed for type and size raceway with which used, and for application and environment in which installed.

1. Conduit Fittings for Hazardous (Classified) Locations: Comply with UL 886.
2. Coating for Fittings for PVC-Coated Conduit: Minimum thickness, 0.040 inch with overlapping sleeves protecting threaded joints.

2.2 BOXES, ENCLOSURES, AND CABINETS

A. Sheet Metal Outlet and Device Boxes: NEMA OS 1.

B. Cast-Metal Outlet and Device Boxes: NEMA FB 1, ferrous alloy aluminum, Type FD, with gasketed cover.

C. Small Sheet Metal Pull and Junction Boxes: NEMA OS 1.

D. Cast-Metal Access, Pull, and Junction Boxes: NEMA FB 1, galvanized, cast iron with gasketed cover.

E. Hinged-Cover Enclosures: NEMA 250, Type 1, with continuous-hinge cover with flush latch, unless otherwise indicated.

1. Metal Enclosures: Steel, finished inside with manufacturer's standard enamel.

2. Outside finish to match PVC Coated RGS.

F. Cabinets:

1. NEMA 4X, Stainless Steel box with removable interior panel and removable front, finished inside with manufacturer's standard enamel.
2. Hinged door in front cover with flush latch and concealed hinge.
3. Key latch to match panelboards.
4. Metal barriers to separate wiring of different systems and voltage.
5. Accessory feet where required for freestanding equipment.

PART 3 - EXECUTION

3.1 RACEWAY APPLICATION

A. Outdoors: Apply raceway products as specified below, unless otherwise indicated:

1. Exposed Conduit: Rigid steel conduit, PVC Coated.
2. Concealed Conduit, Aboveground: Rigid Steel Conduit, PVC Coated.
3. Underground Conduit: RNC, Type EPC-80-PVC, direct buried, Schedule 80
4. Boxes and Enclosures, Aboveground: NEMA 250, Type 3R.

B. Comply with the following indoor applications, unless otherwise indicated:

1. Exposed, Not Subject to Physical Damage: EMT. (in Cabinets Only)
2. Exposed and Subject to Severe Physical Damage: Rigid steel conduit. Includes raceways in the following locations:
3. Damp or Wet Locations: Rigid steel conduit, PVC Coated.
4. Boxes and Enclosures: NEMA 250, Type 1, except use NEMA 250, Type 4X, stainless steel in damp or wet locations.

C. Minimum Raceway Size: 1-inch trade size.

D. Raceway Fittings: Compatible with raceways and suitable for use and location.

1. Rigid Steel Conduit: Use threaded rigid steel conduit fittings, unless otherwise indicated.

2. PVC Externally Coated, Rigid Steel Conduits: Use only fittings listed for use with that material. Patch and seal all joints, nicks, and scrapes in PVC coating after installing conduits and fittings. Use sealant as recommended by fitting manufacturer.

3.2 INSTALLATION

A. Install pull wires in empty raceways. Use polypropylene or monofilament plastic line with not less than 200-lb tensile strength. Leave at least 12 inches of slack at each end of pull wire.

B. Comply with NECA 1 for installation requirements applicable to products specified in Part 2 except where requirements on Drawings or in this Article are stricter.

C. Complete raceway installation before starting conductor installation.

D. Support raceways as specified in Section "Hangers and Supports for Electrical Systems."

E. Arrange stub-ups so curved portions of bends are not visible above the finished slab.

F. Install no more than the equivalent of three 90-degree bends in any conduit run except for communications conduits, for which fewer bends are allowed.

G. Raceways Embedded in Slabs:

1. Run conduit larger than 1-inch trade size, parallel or at right angles to main reinforcement. Where at right angles to reinforcement, place conduit close to slab support.
2. Arrange raceways to cross building expansion joints at right angles with expansion fittings.

H. Threaded Conduit Joints, Exposed to Wet, Damp, Corrosive, or Outdoor Conditions: Apply listed compound to threads of raceway and fittings before making up joints. Follow compound manufacturer's written instructions.

I. Raceway Terminations at Locations Subject to Moisture or Vibration: Use insulating bushings to protect conductors, including conductors smaller than No. 4 AWG.

J. Raceways for Optical Fiber and Communications Cable: Install raceways as follows:

1. 1-InchTrade Size and Larger: Install raceways in maximum lengths of 75 feet.
2. Install with a maximum of two 90-degree bends or equivalent for each length of raceway unless Drawings show stricter requirements. Separate lengths with pull or junction boxes or terminations at distribution frames or cabinets where necessary to comply with these requirements.

K. Install raceway sealing fittings at suitable, approved, and accessible locations and fill them with listed sealing compound. For concealed raceways, install each fitting in a flush steel box with a blank cover plate having a finish similar to that of adjacent plates or surfaces. Install raceway sealing fittings at the following points:

1. Where conduits pass from warm to cold locations, such as boundaries of refrigerated spaces.
2. Where otherwise required by NFPA 70.

L. Expansion-Joint Fittings: Install in each run of aboveground conduit and around structural expansion joints that is located where environmental temperature change may exceed 30 deg F, and that has straight-run length that exceeds 25 feet.

1. Install fitting(s) that provide expansion and contraction for at least 0.00041 inch per foot of length of straight run per deg for temperature change.
2. Install each expansion-joint fitting with position, mounting, and piston setting selected according to manufacturer's written instructions for conditions at specific location at the time of installation.

3.3 INSTALLATION OF UNDERGROUND CONDUIT

A. Direct-Buried Conduit:

1. Excavate trench bottom to provide firm and uniform support for conduit. Prepare trench bottom as specified in Division 31 Section "Earth Moving" for pipe less than 6 inches in nominal diameter.
2. Install backfill as specified in Division 31 Section "Earth Moving."
3. After installing conduit, backfill and compact. Start at tie-in point, and work toward end of conduit run, leaving conduit at end of run free to move with expansion and contraction as temperature changes during this process. Firmly hand tamp backfill around conduit to provide maximum supporting strength. After placing controlled backfill to within 12 inches of finished grade, make final conduit connection at end of run and complete backfilling with normal compaction as specified in Division 31 Section "Earth Moving."
4. Install manufactured duct elbows for stub-ups at poles and equipment and at building entrances through the floor, unless otherwise indicated. Encase elbows for stub-up ducts throughout the length of the elbow.
5. Install manufactured rigid steel conduit elbows for stub-ups at poles and equipment and at building entrances through the floor.

    a. Couple steel conduits to ducts with adapters designed for this purpose, and encase coupling with 3 inches of concrete.
    b. For stub-ups at equipment mounted on outdoor concrete bases, extend steel conduit horizontally a minimum of 60 inches from edge of equipment pad or foundation. Install insulated grounding bushings on terminations at equipment.

3.4 INSTALLATION OF UNDERGROUND HANDHOLES AND BOXES

A. Install handholes and boxes level and plumb and with orientation and depth coordinated with connecting conduits to minimize bends and deflections required for proper entrances.

B. Unless otherwise indicated, support units on a level bed of crushed stone or gravel, graded from 1/2-inchsieve to No. 4sieve and compacted to same density as adjacent undisturbed earth.

C. Elevation: In paved areas, set so cover surface will be flush with finished grade. Set covers of other enclosures 1 inch above finished grade.

D. Install handholes and boxes with bottom below the frost line, 36” below grade.

E. Install removable hardware, including pulling eyes, cable stanchions, cable arms, and insulators, as required for installation and support of cables and conductors and as indicated. Select arm lengths to be long enough to provide spare space for future cables, but short enough to preserve adequate working clearances in the enclosure.

F. Field-cut openings for conduits according to enclosure manufacturer's written instructions. Cut wall of enclosure with a tool designed for material to be cut. Size holes for terminating fittings to be used, and seal around penetrations after fittings are installed.

END OF SECTION 260533

PART 1 - GENERAL

1.1 RELATED DOCUMENTS

A. Drawings and general provisions of the Contract, including General and Supplementary Conditions and Division 01 Specification Sections, apply to this Section.

1.2 SUMMARY

A. This Section includes the following:

1. Conduit, ducts, and duct accessories for direct-buried duct banks, and in single duct runs.
2. Handholes and boxes.
3. Manholes.

1.3 DEFINITION

A. RNC: Rigid nonmetallic conduit, Schedule 80

B. RGS: Rigid Galvanized Steel with PVC Coating

1.4 SUBMITTALS

A. Product Data: For the following:

1. Duct-bank materials, including separators and miscellaneous components.
2. Ducts and conduits and their accessories, including elbows, end bells, bends, fittings and solvent cement.
3. Accessories for manholes, handholes, boxes and other utility structures.
4. Warning tape.
5. Warning planks.

B. Shop Drawings for Factory-Fabricated Handholes and Boxes Other Than Precast Concrete: Include dimensioned plans, sections, elevations, and fabrication and installation details, include the following:

1. Duct entry provisions, including locations and duct sizes.
2. Cover design.
3. Grounding details.
4. Dimensioned locations of cable rack inserts, and pulling-in and lifting irons.

C. Duct-Bank Coordination Drawings: Show duct profiles and coordination with other utilities and underground structures.

1. Include plans and sections, drawn to scale, and show bends and locations of expansion fittings.
2. Drawings shall be signed and sealed by a qualified professional engineer.

D. Product Certificates: For concrete and steel used in precast concrete manholes and handholes, comply with ASTM C 858.

E. Qualification Data: For professional engineer and testing agency.

F. Source quality-control test reports.

G. Field quality-control test reports.

1.5 QUALITY ASSURANCE

A. Comply with ANSI C2.

B. Comply with NFPA 70.

1.6 DELIVERY, STORAGE, AND HANDLING

A. Deliver ducts to Project site with ends capped. Store nonmetallic ducts with supports to prevent bending, warping, and deforming.

B. Store precast concrete and other factory-fabricated underground utility structures at Project site as recommended by manufacturer to prevent physical damage. Arrange so identification markings are visible.

C. Lift and support precast concrete units only at designated lifting or supporting points.

1.7 COORDINATION

A. Coordinate layout and installation of ducts, manholes, handholes, and boxes with final arrangement of other utilities, site grading, and surface features as determined in the field.

B. Coordinate elevations of ducts and duct-bank entrances into manholes, handholes, and boxes with final locations and profiles of ducts and duct banks as determined by coordination with other utilities, underground obstructions, and surface features. Revise locations and elevations from those indicated as required to suit field conditions and to ensure that duct runs drain to manholes and handholes, and as approved by Architect/Engineer.

1.8 EXTRA MATERIALS

A. Furnish extra materials described below that match products installed and that are packaged with protective covering for storage and identified with labels describing contents.

B. Furnish cable-support stanchions, arms, insulators**,** and associated fasteners in quantities equal to 5 percent of quantity of each item installed with a minimum of at least one spare per item noted.

PART 2 - PRODUCTS

2.1 CONDUIT

A. RGS: Rigid galvanized steel, PVC coated conduit, comply with NEMA RNI, shall be 40 mil dense polyvinyl chloride coating on exterior with cured 2 mil urethane interior. All fittings shall be of same finish. Conduit shall be as manufactured by Plastibond or equal, color shall be coordinated with the Architect and DOT.

B. RNC: NEMA TC 2, Type EPC-80-PVC, UL 651, with matching fittings by same manufacturer as the conduit, complying with NEMA TC 3 and UL 514B.

2.2 NONMETALLIC DUCTS AND DUCT ACCESSORIES

A. Available Manufacturers: Subject to compliance with requirements, manufacturers offering products that may be incorporated into the Work include, but are not limited to, the following:

1. ARNCO Corporation.
2. Beck Manufacturing.
3. Cantex, Inc.
4. CertainTeed Corp.; Pipe & Plastics Group.
5. Condux International, Inc.
6. ElecSys, Inc.
7. Electri-Flex Company.
8. IPEX Inc.
9. Lamson & Sessions; Carlon Electrical Products.
10. Manhattan/CDT; a division of Cable Design Technologies.
11. Spiraduct/AFC Cable Systems, Inc.

B. Duct Accessories:

1. Duct Separators: Factory-fabricated rigid PVC interlocking spacers, sized for type and sizes of ducts with which used, and selected to provide minimum duct spacings indicated while supporting ducts during concreting or backfilling.
2. Warning Tape: Underground-line warning tape specified in Division 26 Section "Identification for Electrical Systems."

2.3 PRECAST CONCRETE HANDHOLES AND BOXES

A. Available Manufacturers: Subject to compliance with requirements, manufacturers offering products that may be incorporated into the Work include, but are not limited to, the following:

1. Carder Concrete Products.
2. Christy Concrete Products.
3. Elmhurst-Chicago Stone Co.
4. Oldcastle Precast Group.
5. Riverton Concrete Products; a division of Cretex Companies, Inc.
6. Utility Concrete Products, LLC.

7. Utility Vault Co.
8. Wausau Tile, Inc.

B. Comply with ASTM C 858 for design and manufacturing processes.

C. Description: Factory-fabricated, reinforced-concrete, monolithically poured walls and bottom unless open-bottom enclosures are indicated. Frame and cover shall form top of enclosure and shall have load rating consistent with that of hand hole or box.

1. Frame and Cover: Weatherproof cast-iron frame, with cast-iron cover with recessed cover hook eyes and tamper-resistant, captive, cover-securing bolts.

2. Cover Finish: Nonskid finish shall have a minimum coefficient of friction of 0.50.
3. Cover Legend: Molded lettering, as indicated for each service.
4. Configuration: Units shall be designed for flush burial and have open bottom unless otherwise indicated.
5. Extensions and Slabs: Designed to mate with bottom of enclosure. Same material as enclosure.

   a. Extension shall provide increased depth of 12 inches
   b. Slab: Same dimensions as bottom of enclosure, and arranged to provide closure.

6. Duct Entrances in Handhole Walls: Cast end-bell or duct-terminating fitting in wall for each entering duct.

   a. Type and size shall match fittings to duct or conduit to be terminated.
   b. Fittings shall align with elevations of approaching ducts and be located near interior corners of handholes to facilitate racking of cable.

7. Handholes 12 inches wide by 24 inches long and larger shall have inserts for cable racks and pulling-in irons installed before concrete is poured.

2.4 HANDHOLES AND BOXES OTHER THAN PRECAST CONCRETE

A. Description: Comply with SCTE 77.

1. Color: Gray.
2. Configuration: Units shall be designed for flush burial and have open bottom unless otherwise indicated.
3. Cover: Weatherproof, secured by tamper-resistant locking devices and having structural load rating consistent with enclosure.
4. Cover Finish: Nonskid finish shall have a minimum coefficient of friction of 0.50.
5. Cover Legend: Molded lettering, as indicated for each service.
6. Duct Entrance Provisions: Duct-terminating fittings shall mate with entering ducts for secure, fixed installation in enclosure wall.
7. Handholes 12 inches wide by 24 inches long and larger shall have factory-installed inserts for cable racks and pulling-in irons.

B. Polymer Concrete Handholes and Boxes with Polymer Concrete Cover: Molded of sand and aggregate, bound together with a polymer resin, and reinforced with steel or fiberglass or a combination of the two.

1. Available Manufacturers: Subject to compliance with requirements manufacturers offering products that may be incorporated into the Work include, but are not limited to, the following:

    a. Armorcast Products Company.
    b. Carson Industries LLC.
    c. CDR Systems Corporation.
    d. NewBasis.
    e. Strongwell.

2.5 PRECAST MANHOLES

A. Available Manufacturers: Subject to compliance with requirements, manufacturers offering products that may be incorporated into the Work include, but are not limited to, the following:

1. Carder Concrete Products.
2. Christy Concrete Products.
3. Elmhurst-Chicago Stone Co.
4. Oldcastle Precast Group.
5. Riverton Concrete Products; a division of Cretex Companies, Inc.
6. Utility Concrete Products, LLC.
7. Utility Vault Co.
8. Wausau Tile, Inc.

B. Comply with ASTM C 858, with structural design loading as specified in Part 3 "Underground Enclosure Application" Article, and with interlocking mating sections, complete with accessories, hardware, and features.

1. Duct Entrances in Manhole Walls: Cast end-bell or duct-terminating fitting in wall for each entering duct.

    a. Type and size shall match fittings to duct or conduit to be terminated.
    b. Fittings shall align with elevations of approaching ducts and be located near interior corners of manholes to facilitate racking of cable.

C. Concrete Knockout Panels: 1-1/2 to 2 inches thick, for future conduit entrance and sleeve for ground rod.

D. Joint Sealant: Asphaltic-butyl material with adhesion, cohesion, flexibility, and durability properties necessary to withstand maximum hydrostatic pressures at the installation location with the ground-water level at grade.

2.6 CAST-IN-PLACE MANHOLES

A. Description: Underground utility structures, constructed in place, complete with accessories, hardware, and features. Include concrete knockout panels for conduit entrance and sleeve for ground rod.

B. Materials: Comply with ASTM C 858 and with Division 03 Section "Cast-in-Place Concrete."

C. Structural Design Loading: As specified in Part 3 "Underground Enclosure Application" Article.

2.7 UTILITY STRUCTURE ACCESSORIES

A. Available Manufacturers: Subject to compliance with requirements manufacturers offering products that may be incorporated into the Work include, but are not limited to, the following:

1. Bilco Company (The).
2. Campbell Foundry Company.
3. Carder Concrete Products
4. Christy Concrete Products.
5. East Jordan Iron Works, Inc.
6. Elmhurst-Chicago Stone Co.
7. McKinley Iron Works, Inc.
8. Neenah Foundry Company.
9. NewBasis.
10. Oldcastle Precast Group.
11. Osburn Associates, Inc.
12. Pennsylvania Insert Corporation.
13. Riverton Concrete Products; a division of Cretex Companies, Inc.
14. Strongwell Corporation; Lenoir City Division.
15. Underground Devices, Inc.
16. Utility Concrete Products, LLC.
17. Utility Vault Co.
18. Wausau Tile, Inc.

B. Manhole Frames, Covers, and Chimney Components: Comply with structural design loading specified for manhole.

1. Frame and Cover: Weatherproof, gray cast iron complying with ASTM A 48/A 48M, Class 30B with milled cover-to-frame bearing surfaces; diameter, 26 inches

   a. Cover Finish: Nonskid finish shall have a minimum coefficient of friction of 0.50.
   b. Special Covers: Recess in face of cover designed to accept finish material in paved areas.

2. Cover Legend: Cast in. Selected to suit system.

   a. Legend: "ELECTRIC-LV" for duct systems with power wires and cables for systems operating at 600 V and less.
   b. Legend: "ELECTRIC-HV" for duct systems with medium-voltage cables.
   c. Legend: "SIGNAL" for communications, data, and telephone duct systems.

C. Manhole Sump Frame and Grate: ASTM A 48/A 48M, Class 30B, gray cast iron.

D. Pulling Eyes in Concrete Walls: Eyebolt with reinforcing-bar fastening insert, 2-inch-diameter eye, and 1-by-4-inchbolt.

1. Working Load Embedded in 6-Inch, 4000-psiConcrete: 13,000-lbfminimum tension.

E. Pulling Eyes in Nonconcrete Walls: Eyebolt with reinforced fastening, 1-1/4-inch-diameter eye, rated 2500-lbfminimum tension.

F. Pulling-In and Lifting Irons in Concrete Floors: 7/8-inch-diameter, hot-dip galvanized, bent steel rod; stress relieved after forming; and fastened to reinforcing rod. Exposed triangular opening.

1. Ultimate Yield Strength: 40,000-lbfshear and 60,000-lbftension.

G. Bolting Inserts for Concrete Utility Structure Cable Racks and Other Attachments: Flared, threaded inserts of noncorrosive, chemical-resistant, nonconductive thermoplastic material; 1/2-inchID by 2-3/4 inchesdeep, flared to 1-1/4 inchesminimum at base.

1. Tested Ultimate Pullout Strength: 12,000 lbf minimum.

H. Expansion Anchors for Installation after Concrete Is Cast: Zinc-plated, carbon-steel-wedge type with stainless-steel expander clip with 1/2-inchbolt, 5300-lbfrated pullout strength, and minimum 6800-lbfrated shear strength.

I. Cable Rack Assembly: Steel, hot-dip galvanized, except insulators.

1. Stanchions: T-section or channel; 2-1/4-inchnominal size; punched with 14 holes on 1-1/2-inchcenters for cable-arm attachment.
2. Arms: 1-1/2 incheswide, lengths ranging from 3 incheswith 450-lbminimum capacity to 18 incheswith 250-lbminimum capacity. Arms shall have slots along full length for cable ties and be arranged for secure mounting in horizontal position at any vertical location on stanchions.
3. Insulators: High-glaze, wet-process porcelain arranged for mounting on cable arms.

J. Duct-Sealing Compound: Nonhardening, safe for contact with human skin, not deleterious to cable insulation, and workable at temperatures as low as 35 deg F. Capable of withstanding temperature of 300 deg Fwithout slump and adhering to clean surfaces of plastic ducts, metallic conduits, conduit coatings, concrete, masonry, lead, cable sheaths, cable jackets, insulation materials, and common metals.

K. Fixed Manhole Ladders: Arranged for attachment to wall and floor of manhole. Ladder and mounting brackets and braces shall be fabricated from hot-dip galvanized steel.

L. Portable Manhole Ladders: UL-listed, heavy-duty fiberglass specifically designed for portable use for access to electrical manholes. Minimum length equal to distance from deepest manhole floor to grade plus 36 inches. One required.

M. Cover Hooks: Heavy duty, designed for lifts 60 lbfand greater. Two required.

2.8 SOURCE QUALITY CONTROL

A. Test and inspect precast concrete utility structures according to ASTM C 1037.

B. Non-concrete Handhole and Box Prototype Test: Test prototypes of manholes and boxes for compliance with SCTE 77. Strength tests shall be for specified tier ratings of products supplied.

1. Strength tests of complete boxes and covers shall be by either an independent testing agency or the manufacturer. A qualified registered professional engineer shall certify tests by manufacturer.
2. Testing machine pressure gages shall have current calibration certification complying with ISO 9000 and ISO 10012, and traceable to NIST standards.

PART 3 - EXECUTION

3.1 UNDERGROUND DUCT APPLICATION

A. Ducts for Electrical Cables over 600 V: Rigid Steel Conduit, in direct-buried duct bank, unless otherwise indicated.

B. Ducts for Electrical Feeders 600 V and Less: RNC, NEMA Type EPC-80-PVC, in direct-buried duct bank, unless otherwise indicated.

C. Ducts for Electrical Branch Circuits: RNC, NEMA Type EPC-80-PVC, in direct-buried duct bank, unless otherwise indicated.

D. Underground Ducts for Telephone, Communications, or Data Utility Service Cables: RNC, NEMA Type EPC-80-PVC, installed in direct-buried duct bank, unless otherwise indicated.

3.2 UNDERGROUND ENCLOSURE APPLICATION

A. Handholes and Boxes for 600 V and Less**,** Including Telephone, Communications, and Data Wiring:

1. Units in Roadways and Other Deliberate Traffic Paths: Precast concrete. AASHTO HB 17, H-20 structural load rating.
2. Units in Driveway, Parking Lot, and Off-Roadway Locations, Subject to Occasional, Non-deliberate Loading by Heavy Vehicles: Precast concrete, AASHTO HB 17, H-20 structural load rating.
3. Units in Sidewalk and Similar Applications with a Safety Factor for Non-deliberate Loading by Vehicles: Precast concrete, AASHTO HB 17, H-10 structural load rating.
4. Units Subject to Light-Duty Pedestrian Traffic Only: Fiberglass-reinforced polyester resin, structurally tested according to SCTE 77 with 3000-lbfvertical loading.

B. Manholes: Precast or cast-in-place concrete.

1. Units Located in Roadways and Other Deliberate Traffic Paths by Heavy or Medium Vehicles: H-20 structural load rating according to AASHTO HB 17.
2. Units Not Located in Deliberate Traffic Paths by Heavy or Medium Vehicles: H-10 load rating according to AASHTO HB 17.

3.3 EARTHWORK

A. Excavation and Backfill: Comply with Division 31 Section "Earth Moving," but do not use heavy-duty, hydraulic-operated, compaction equipment.

B. Restore surface features at areas disturbed by excavation and reestablish original grades unless otherwise indicated. Replace removed sod immediately after backfilling is completed.

C. Restore areas disturbed by trenching, storing of dirt, cable laying, and other work. Restore vegetation and include necessary top-soiling, fertilizing, liming, seeding, sodding, sprigging, and mulching. Comply with Division 32 Sections "Turf and Grasses" and "Plants."

D. Cut and patch existing pavement in the path of underground ducts and utility structures according to Division 01 Section "Cutting and Patching."

3.4 DUCT INSTALLATION

A. Slope: Pitch ducts a minimum slope of 1:300 down toward manholes and handholes and away from buildings and equipment. Slope ducts from a high point in runs between two manholes to drain in both directions.

B. Curves and Bends: Use 5-degree angle couplings for small changes in direction. Use manufactured long sweep bends with a minimum radius of 48 inches, both horizontally and vertically, at other locations unless otherwise indicated.

C. Joints: Use solvent-cemented joints in ducts and fittings and make watertight according to manufacturer's written instructions. Stagger couplings so those of adjacent ducts do not lie in same plane.

D. Duct Entrances to Manholes and Concrete and Polymer Concrete Handholes: Use end bells, spaced approximately 10 inches O.C. for 5-inchducts, and vary proportionately for other duct sizes.

1. Begin change from regular spacing to end-bell spacing 10 ft. from the end bell without reducing duct line slope and without forming a trap in the line.
2. Direct-Buried Duct Banks: Install an expansion and deflection fitting in each conduit in the area of disturbed earth adjacent to manhole or handhole.
3. Grout end bells into structure walls from both sides to provide watertight entrances.

E. Sealing: Provide temporary closure at terminations of ducts that have cables pulled. Seal spare ducts at terminations. Use sealing compound and plugs to withstand at least 15-psig hydrostatic pressure.

F. Pulling Cord: Install 100-lbf-test nylon cord in ducts, including spares.

G. Direct-Buried Duct Banks:

1. Support ducts on duct separators coordinated with duct size, duct spacing, and outdoor temperature.
2. Space separators close enough to prevent sagging and deforming of ducts, with not less than 5 spacers per 20 ft.of duct. Secure separators to earth and to ducts to prevent displacement during backfill and yet permit linear duct movement due to expansion and contraction as temperature changes. Stagger spacers approximately 6 inches between tiers.

3. Excavate trench bottom to provide firm and uniform support for duct bank. Prepare trench bottoms as specified in other Divisions for pipes less than 6 inches in nominal diameter.
4. Install backfill as specified in other Divisions.
5. After installing first tier of ducts, backfill and compact. Start at tie-in point and work toward end of duct run, leaving ducts at end of run free to move with expansion and contraction as temperature changes during this process. Repeat procedure after placing each tier. After placing last tier, hand-place backfill to 14 inches over ducts and hand tamp. Firmly tamp backfill around ducts to provide maximum supporting strength. Use hand tamper only. After placing controlled backfill over final tier, make final duct connections at end of run and complete backfilling with normal compaction as specified in other Divisions.
6. Install ducts with a minimum of 3 inches between ducts for like services and 14 inches between power and signal ducts.
7. Depth: Install top of duct bank at least 36 inches below finished grade unless otherwise indicated. Ducts for primary electric service shall be at least 36 inches below finished grade.
8. Set elevation of bottom of duct bank below the frost line.
9. Install manufactured rigid steel conduit elbows for stub-ups at poles and equipment and at building entrances through the floor.

    a. Couple steel conduits to ducts with adapters designed for this purpose, and encase coupling with 3 inches of concrete.
    b. For equipment mounted on outdoor concrete bases, extend steel conduit horizontally a minimum of 60 inches from edge of equipment pad or foundation. Install insulated grounding bushings on terminations at equipment.

3.5 INSTALLATION OF CONCRETE MANHOLES, HANDHOLES, AND BOXES

A. Cast-in-Place Manhole Installation:

1. Finish interior surfaces with a smooth-troweled finish.
2. Windows for Future Duct Connections: Form and pour concrete knockout panels 1-1/2- to 2- inches thick, arranged as indicated.
3. Cast-in-place concrete, formwork, and reinforcement are specified in Division 03 Section "Cast-in-Place Concrete."

B. Precast Concrete Handhole and Manhole Installation:

1. Comply with ASTM C 891 unless otherwise indicated.
2. Install units level and plumb and with orientation and depth coordinated with connecting ducts to minimize bends and deflections required for proper entrances.
3. Unless otherwise indicated, support units on a level bed of crushed stone or gravel, graded from 1-inchsieve to No. 4sieve and compacted to same density as adjacent undisturbed earth.

C. Elevations:

1. Manhole Roof: Install with rooftop at least 15 inches below finished grade.
2. Manhole Frame: In paved areas and traffic ways, set frames flush with finished grade. Set other manhole frames 1 inch above finished grade.

3. Handhole Covers: In paved areas and traffic ways, set surface flush with finished grade. Set covers of other handholes 1 inch above finished grade.
4. Where indicated, cast hand hole cover frame integrally with hand hole structure.

D. Drainage: Install drains in bottom of manholes where indicated. Coordinate with drainage provisions indicated.

E. Manhole Access: Circular opening in manhole roof; sized to match cover size.

1. Manholes with Fixed Ladders: Offset access opening from manhole centerlines to align with ladder.
2. Install chimney, constructed of precast concrete collars and rings to support frame and cover and to connect cover with manhole roof opening. Provide moisture-tight masonry joints and waterproof grouting for cast-iron frame to chimney.

F. Hardware: Install removable hardware, including pulling eyes, cable stanchions, cable arms, and insulators, as required for installation and support of cables and conductors and as indicated.

G. Fixed Manhole Ladders: Arrange to provide for safe entry with maximum clearance from cables and other items in manholes.

H. Field-Installed Bolting Anchors in Manholes and Concrete Handholes: Do not drill deeper than 3-7/8 inches for manholes and 2 inches for handholes, for anchor bolts installed in the field. Use a minimum of two anchors for each cable stanchion.

I. Warning Sign: Install "Confined Space Hazard" warning sign on the inside surface of each manhole cover.

3.6 INSTALLATION OF HANDHOLES AND BOXES OTHER THAN PRECAST CONCRETE

A. Install handholes and boxes level and plumb and with orientation and depth coordinated with connecting ducts to minimize bends and deflections required for proper entrances. Use box extension if required to match depths of ducts, and seal joint between box and extension as recommended by the manufacturer.

B. Unless otherwise indicated, support units on a level bed of crushed stone or gravel, graded from 1/2-inchsieve to No. 4sieve and compacted to same density as adjacent undisturbed earth.

C. Elevation: In paved areas and traffic ways, set so cover surface will be flush with finished grade. Set covers of other handholes 1 inch above finished grade.

D. Install removable hardware, including pulling eyes, cable stanchions, cable arms, and insulators, as required for installation and support of cables and conductors and as indicated. Select arm lengths to be long enough to provide spare space for future cables, but short enough to preserve adequate working clearances in the enclosure.

E. Field-cut openings for ducts and conduits according to enclosure manufacturer's written instructions. Cut wall of enclosure with a tool designed for material to be cut. Size holes for terminating fittings to be used, and seal around penetrations after fittings are installed.

F. For enclosures installed in asphalt paving and concrete and subject to occasional, non-deliberate, heavy-vehicle loading, form and pour a concrete ring encircling, and in contact with, enclosure and with top surface screened to top of box cover frame. Bottom of ring shall rest on compacted earth.

1. Concrete: 3000 psi, 28-day strength, complying with Division 03 Section "Cast-in-Place Concrete," with a troweled finish.
2. Dimensions: 10 inches wide by 12 inches deep

3.7 GROUNDING

A. Ground underground ducts and utility structures according to Section "Grounding and Bonding for Electrical Systems."

3.8 FIELD QUALITY CONTROL

A. Perform the following tests and inspections and prepare test reports:

1. Demonstrate capability and compliance with requirements on completion of installation of underground ducts and utility structures.
2. Pull aluminum or wood test mandrel through duct to prove joint integrity and test for out-of-round duct. Provide mandrel equal to 80 percent fill of duct. If obstructions are indicated, remove obstructions and retest.
3. Test manhole and hand hole grounding to ensure electrical continuity of grounding and bonding connections. Measure and report ground resistance as specified in Division 26 Section "Grounding and Bonding for Electrical Systems."

B. Correct deficiencies and retest as specified above to demonstrate compliance.

3.9 CLEANING

A. Pull leather-washer-type duct cleaner, with graduated washer sizes, through full length of ducts. Follow with rubber duct swab for final cleaning and to assist in spreading lubricant throughout ducts.

B. Clean internal surfaces of manholes, including sump. Remove foreign material.

END OF SECTION 260543

PART 1 - GENERAL

1.1 RELATED DOCUMENTS

A. Drawings and general provisions of the Contract, including General and Supplementary Conditions and Division 01 Specification Sections, apply to this Section.

1.2 SUMMARY

A. This Section includes the following:

1. Isolation pads.
2. Channel support systems.
3. Anchorage bushings and washers.

B. Related Sections include the following:

1. Division 26 Section "Hangers and Supports For Electrical Systems" for commonly used electrical supports and installation requirements.

1.3 DEFINITIONS

A. The IBC: International Building Code.

B. ICC-ES: ICC-Evaluation Service.

1.4 PERFORMANCE REQUIREMENTS

A. Seismic-Restraint Loading:

1. Site Class as Defined in the IBC: D.
2. Assigned Seismic Use Group or Building Category as Defined in the IBC: II.

   a. Component Importance Factor: 1.0.
   b. Component Response Modification Factor: 1.5.
   c. Component Amplification Factor: 1.0.

3. Design Spectral Response Acceleration at Short Periods (0.2 Second): 25.9%.
4. Design Spectral Response Acceleration at 1.0-Second Period: 9.92%.

1.5 SUBMITTALS

A. Product Data: For the following:

1. Include rated load, rated deflection, and overload capacity for each vibration isolation device.
2. Illustrate and indicate style, material, strength, fastening provision, and finish for each type and size of seismic-restraint component used.

    a. Tabulate types and sizes of seismic restraints, complete with report numbers and rated strength in tension and shear as evaluated by an agency acceptable to authorities having jurisdiction.
    b. Annotate to indicate application of each product submitted and compliance with requirements.

3. Restrained-Isolation Devices: Include ratings for horizontal, vertical, and combined loads.

B. Delegated-Design Submittal: For vibration isolation and seismic-restraint details indicated to comply with performance requirements and design criteria, including analysis data signed and sealed by the qualified professional engineer responsible for their preparation.

1. Design Calculations: Calculate static and dynamic loading due to equipment weight and operation, seismic forces required to select vibration isolators and seismic restraints.

    a. Coordinate design calculations with wind-load calculations required for equipment mounted outdoors. Comply with requirements in other Division 16 Sections for equipment mounted outdoors.

2. Indicate materials and dimensions and identify hardware, including attachment and anchorage devices.
3. Field-fabricated supports.
4. Seismic-Restraint Details:

    a. Design Analysis: To support selection and arrangement of seismic restraints. Include calculations of combined tensile and shear loads.
    b. Details: Indicate fabrication and arrangement. Detail attachments of restraints to the restrained items and to the structure. Show attachment locations, methods, and spacings. Identify components, list their strengths, and indicate directions and values of forces transmitted to the structure during seismic events. Indicate association with vibration isolation devices.
    c. Preapproval and Evaluation Documentation: an agency acceptable to authorities having jurisdiction, showing maximum ratings of restraint items and the basis for approval (tests or calculations).

C. Coordination Drawings: Show coordination of seismic bracing for electrical components with other systems and equipment in the vicinity, including other supports and seismic restraints.

D. Welding certificates.

E. Qualification Data: For professional engineer.

F. Field quality-control test reports.

G. **Seismic submittal package shall be complete and submitted by Vibra-Conn, Inc., 1-800-379-9119, or equal.**

H. **Engineering Design Criteria shall be provided by Laurel Engineering, (860) 379-6898, contact: Robert Colabella, P.E. or equal.**

1.6 QUALITY ASSURANCE

A. Comply with seismic-restraint requirements in the IBC unless requirements in this Section are more stringent.

B. Welding: Qualify procedures and personnel according to AWS D1.1/D1.1M, "Structural Welding Code - Steel."

C. Seismic-restraint devices shall have horizontal and vertical load testing and analysis and shall bear anchorage preapproval OPA number from OSHPD, preapproval by ICC-ES, or preapproval by another agency acceptable to authorities having jurisdiction, showing maximum seismic-restraint ratings. Ratings based on independent testing are preferred to ratings based on calculations. If preapproved ratings are not available, submittals based on independent testing are preferred. Calculations (including combining shear and tensile loads) to support seismic-restraint designs must be signed and sealed by a qualified professional engineer.

D. Comply with NFPA 70.

PART 2 - PRODUCTS

2.1 VIBRATION ISOLATORS

A. Available Manufacturers: Subject to compliance with requirements, manufacturers offering products that may be incorporated into the Work include, but are not limited to, the following:

1. Ace Mountings Co., Inc.
2. Amber/Booth Company, Inc.
3. California Dynamics Corporation.
4. Isolation Technology, Inc.
5. Kinetics Noise Control.
6. Mason Industries.
7. Vibration Eliminator Co., Inc.
8. Vibration Isolation.
9. Vibration Mountings & Controls, Inc.

B. Pads: Arrange in single or multiple layers of sufficient stiffness for uniform loading over pad area, molded with a nonslip pattern and galvanized-steel baseplates, and factory cut to sizes that match requirements of supported equipment.

1. Resilient Material: Oil- and water-resistant neoprene.

2.2 SEISMIC-RESTRAINT DEVICES

A. Available Manufacturers: Subject to compliance with requirements, manufacturers offering products that may be incorporated into the Work include, but are not limited to, the following:

1. Amber/Booth Company, Inc.
2. California Dynamics Corporation.
3. Cooper B-Line, Inc.; a division of Cooper Industries.
4. Hilti Inc.
5. Loos & Co.; Seismic Earthquake Division.
6. Mason Industries.
7. TOLCO Incorporated; a brand of NIBCO INC.
8. Unistrut; Tyco International, Ltd.

B. General Requirements for Restraint Components: Rated strengths, features, and application requirements shall be as defined in reports by an agency acceptable to authorities having jurisdiction.

1. Structural Safety Factor: Allowable strength in tension, shear, and pullout force of components shall be at least four times the maximum seismic forces to which they will be subjected.

C. Channel Support System: MFMA-3, shop- or field-fabricated support assembly made of slotted steel channels with accessories for attachment to braced component at one end and to building structure at the other end and other matching components and with corrosion-resistant coating; and rated in tension, compression, and torsion forces.

D. Bushings for Floor-Mounted Equipment Anchor: Neoprene bushings designed for rigid equipment mountings, and matched to type and size of anchors and studs.

E. Bushing Assemblies for Wall-Mounted Equipment Anchorage: Assemblies of neoprene elements and steel sleeves designed for rigid equipment mountings, and matched to type and size of attachment devices.

F. Resilient Isolation Washers and Bushings: One-piece, molded, oil- and water-resistant neoprene, with a flat washer face.

G. Mechanical Anchor: Drilled-in and stud-wedge or female-wedge type in zinc-coated steel for interior applications and stainless steel for exterior applications. Select anchors with strength required for anchor and as tested according to ASTM E 488. Minimum length of eight times diameter.

H. Adhesive Anchor: Drilled-in and capsule anchor system containing polyvinyl or urethane methacrylate-based resin and accelerator, or injected polymer or hybrid mortar adhesive. Provide anchor bolts and hardware with zinc-coated steel for interior applications and stainless steel for exterior applications. Select anchor bolts with strength required for anchor and as tested according to ASTM E 488.

2.3 FACTORY FINISHES

A. Finish: Manufacturer's standard prime-coat finish ready for field painting.

B. Finish: Project Color shall be applied to factory-assembled and -tested equipment before shipping.

1. Powder coating on springs and housings.
2. All hardware shall be galvanized. Hot-dip galvanize metal components for exterior use.
3. Baked enamel or powder coat for metal components on isolators for interior use.
4. Color-code or otherwise mark vibration isolation and seismic-control devices to indicate capacity range.

PART 3 - EXECUTION

3.1 EXAMINATION

A. Examine areas and equipment to receive vibration isolation and seismic-control devices for compliance with requirements for installation tolerances and other conditions affecting performance.

B. Examine roughing-in of reinforcement and cast-in-place anchors to verify actual locations before installation.

C. Proceed with installation only after unsatisfactory conditions have been corrected.

3.2 APPLICATIONS

A. Multiple Raceways: Secure raceways and cables to trapeze member with clamps approved for application by an agency acceptable to authorities having jurisdiction.

B. Strength of Support and Seismic-Restraint Assemblies: Where not indicated, select sizes of components so strength will be adequate to carry present and future static and seismic loads within specified loading limits.

3.3 SEISMIC-RESTRAINT DEVICE INSTALLATION

A. Equipment and Hanger Restraints:

1. Install restrained isolators on electrical equipment.
2. Install resilient, bolt-isolation washers on equipment anchor bolts where clearance between anchor and adjacent surface exceeds 0.125 inch.
3. Install seismic-restraint devices using methods approved by an agency acceptable to authorities having jurisdiction providing required submittals for component.

B. Install bushing assemblies for mounting bolts for wall-mounted equipment, arranged to provide resilient media where equipment or equipment-mounting channels are attached to wall.

C. Attachment to Structure: If specific attachment is not indicated, anchor bracing to structure at flanges of beams, at upper truss chords of bar joists, or at concrete members.

D. Drilled-in Anchors:

1. Identify position of reinforcing steel and other embedded items prior to drilling holes for anchors. Do not damage existing reinforcing or embedded items during coring or drilling. Notify the structural engineer if reinforcing steel or other embedded items are encountered during drilling. Locate and avoid pre-stressed tendons, electrical and telecommunications conduit, and gas lines.
2. Do not drill holes in concrete or masonry until concrete, mortar, or grout has achieved full design strength.
3. Wedge Anchors: Protect threads from damage during anchor installation. Heavy-duty sleeve anchors shall be installed with sleeve fully engaged in the structural element to which anchor is to be fastened.
4. Adhesive Anchors: Clean holes to remove loose material and drilling dust prior to installation of adhesive. Place adhesive in holes proceeding from the bottom of the hole and progressing toward the surface in such a manner as to avoid introduction of air pockets in the adhesive.
5. Set anchors to manufacturer's recommended torque, using a torque wrench.
6. Install zinc-coated steel anchors for interior and stainless-steel anchors for exterior applications.

3.4 ACCOMMODATION OF DIFFERENTIAL SEISMIC MOTION

A. Install flexible connections in runs of raceways, cables, wireways, cable trays, and busways where they cross seismic joints, where adjacent sections or branches are supported by different structural elements, and where they terminate with connection to equipment that is anchored to a different structural element from the one supporting them as they approach equipment.

3.5 FIELD QUALITY CONTROL

A. Perform tests and inspections.

B. Tests and Inspections:

1. Provide evidence of recent calibration of test equipment by a testing agency acceptable to authorities having jurisdiction.
2. Schedule test with Owner, through Architect, before connecting anchorage device to restrained component (unless postconnection testing has been approved), and with at least seven days' advance notice.
3. Obtain Architect's approval before transmitting test loads to structure. Provide temporary load-spreading members.
4. Test at least four of each type and size of installed anchors and fasteners selected by Architect.
5. Test to 90 percent of rated proof load of device.
6. Measure isolator restraint clearance.
7. Measure isolator deflection.
8. Verify snubber minimum clearances.

9. If a device fails test, modify all installations of same type and retest until satisfactory results are achieved.

C. Remove and replace malfunctioning units and retest as specified above.

D. Prepare test and inspection reports.

3.6 ADJUSTING

A. Adjust isolators after isolated equipment is at operating weight.

B. Adjust limit stops on restrained spring isolators to mount equipment at normal operating height. After equipment installation is complete, adjust limit stops so they are out of contact during normal operation.

C. Adjust active height of spring isolators.

D. Adjust restraints to permit free movement of equipment within normal mode of operation.

END OF SECTION 260548

PART 1 - GENERAL

1.1 RELATED DOCUMENTS

A. Drawings and general provisions of the Contract, including General and Supplementary Conditions and Division 01 Specification Sections, apply to this Section.

1.2 SUMMARY

A. Section Includes:

1. Identification for raceways.
2. Identification of power and control cables.
3. Identification for conductors.
4. Underground-line warning tape.
5. Warning labels and signs.
6. Instruction signs.
7. Equipment identification labels.
8. Miscellaneous identification products.

1.3 SUBMITTALS

A. Product Data: For each electrical identification product indicated.

B. Samples: For each type of label and sign to illustrate size, colors, lettering style, mounting provisions, and graphic features of identification products.

C. Identification Schedule: An index of nomenclature of electrical equipment and system components used in identification signs and labels.

1.4 QUALITY ASSURANCE

A. Comply with ANSI A13.1 and IEEE C2.

B. Comply with NFPA 70.

C. Comply with 29 CFR 1910.144 and 29 CFR 1910.145.

D. Comply with ANSI Z535.4 for safety signs and labels.

E. Adhesive-attached labeling materials, including label stocks, laminating adhesives, and inks used by label printers, shall comply with UL 969.

1.5 COORDINATION

A. Coordinate identification names, abbreviations, colors, and other features with requirements in other Sections requiring identification applications, Drawings, Shop Drawings, manufacturer's wiring diagrams, and the Operation and Maintenance Manual; and with those required by codes, standards, and 29 CFR 1910.145. Use consistent designations throughout Project.

B. Coordinate installation of identifying devices with completion of covering and painting of surfaces where devices are to be applied.

C. Coordinate installation of identifying devices with location of access panels and doors.

D. Install identifying devices before installing acoustical ceilings and similar concealment.

PART 2 - PRODUCTS

2.1 POWER RACEWAY IDENTIFICATION MATERIALS

A. Comply with ANSI A13.1 for minimum size of letters for legend and for minimum length of color field for each raceway size.

B. Colors for Raceways Carrying Circuits at 600 V or Less:

1. Black letters on an orange field.
2. Legend: Indicate voltage and system or service type.

C. Colors for Raceways Carrying Circuits at More Than 600 V:

1. Black letters on an orange field.
2. Legend: "DANGER CONCEALED HIGH VOLTAGE WIRING" with 3-inch-high letters on 20-inchcenters.

D. Self-Adhesive Vinyl Labels for Raceways Carrying Circuits at 600 V or Less: Preprinted, flexible label laminated with a clear, weather- and chemical-resistant coating and matching wraparound adhesive tape for securing ends of legend label.

E. Snap-Around Labels for Raceways Carrying Circuits at 600 V or Less: Slit, pre-tensioned, flexible, preprinted, color-coded acrylic sleeve, with diameter sized to suit diameter of raceway or cable it identifies and to stay in place by gripping action.

F. Snap-Around, Color-Coding Bands for Raceways Carrying Circuits at 600 V or Less: Slit, pre-tensioned, flexible, solid-colored acrylic sleeve, 2 inches long, with diameter sized to suit diameter of raceway or cable it identifies and to stay in place by gripping action.

G. Tape and Stencil for Raceways Carrying Circuits More Than 600 V: 4-inch-wide black stripes on 10-inchcenters diagonally over orange background that extends full length of raceway or duct and is 12 inches wide. Stop stripes at legends.

H. Metal Tags: Brass or aluminum, 2 by 2 by 0.05 inch, with stamped legend, punched for use with self-locking cable tie fastener.

I. Write-On Tags: Polyester tag, 0.010 inch thick, with corrosion-resistant grommet and cable tie for attachment to conductor or cable.

1. Marker for Tags: Permanent, waterproof, black ink marker recommended by tag manufacturer.
2. Marker for Tags: Machine-printed, permanent, waterproof, black ink marker recommended by printer manufacturer.

2.2 POWER AND CONTROL CABLE IDENTIFICATION MATERIALS

A. Comply with ANSI A13.1 for minimum size of letters for legend and for minimum length of color field for each raceway and cable size.

B. Self-Adhesive Vinyl Labels: Preprinted, flexible label laminated with a clear, weather- and chemical-resistant coating and matching wraparound adhesive tape for securing ends of legend label.

C. Metal Tags: Brass or aluminum, 2 by 2 by 0.05 inch, with stamped legend, punched for use with self-locking cable tie fastener.

D. Write-On Tags: Polyester tag, 0.010 inch thick, with corrosion-resistant grommet and cable tie for attachment to conductor or cable.

1. Marker for Tags: Permanent, waterproof, black ink marker recommended by tag manufacturer.
2. Marker for Tags: Machine-printed, permanent, waterproof, black ink marker recommended by printer manufacturer.

E. Snap-Around Labels: Slit, pretensioned, flexible, preprinted, color-coded acrylic sleeve, with diameter sized to suit diameter of raceway or cable it identifies and to stay in place by gripping action.

F. Snap-Around, Color-Coding Bands: Slit, pretensioned, flexible, solid-colored acrylic sleeve, 2 inches long, with diameter sized to suit diameter of raceway or cable it identifies and to stay in place by gripping action.

2.3 CONDUCTOR IDENTIFICATION MATERIALS

A. Color-Coding Conductor Tape: Colored, self-adhesive vinyl tape not less than 3 mils thick by 1 to 2 inches wide.

B. Self-Adhesive Vinyl Labels: Preprinted, flexible label laminated with a clear, weather- and chemical-resistant coating and matching wraparound adhesive tape for securing ends of legend label.

C. Snap-Around Labels: Slit, pretensioned, flexible, preprinted, color-coded acrylic sleeve, with diameter sized to suit diameter of raceway or cable it identifies and to stay in place by gripping action.

D. Snap-Around, Color-Coding Bands: Slit, pretensioned, flexible, solid-colored acrylic sleeve, 2 inches long, with diameter sized to suit diameter of raceway or cable it identifies and to stay in place by gripping action.

E. Marker Tapes: Vinyl or vinyl-cloth, self-adhesive wraparound type, with circuit identification legend machine printed by thermal transfer or equivalent process.

F. Write-On Tags: Polyester tag, 0.010 inch thick, with corrosion-resistant grommet and cable tie for attachment to conductor or cable.

1. Marker for Tags: Permanent, waterproof, black ink marker recommended by tag manufacturer.
2. Marker for Tags: Machine-printed, permanent, waterproof, black ink marker recommended by printer manufacturer.

2.4 UNDERGROUND-LINE WARNING TAPE

A. Tape:

1. Recommended by manufacturer for the method of installation and suitable to identify and locate underground electrical and communications utility lines.
2. Printing on tape shall be permanent and shall not be damaged by burial operations.
3. Tape material and ink shall be chemically inert, and not subject to degrading when exposed to acids, alkalis, and other destructive substances commonly found in soils.

B. Color and Printing:

1. Comply with ANSI Z535.1 through ANSI Z535.5.
2. Inscriptions for Red-Colored Tapes: ELECTRIC LINE, HIGH VOLTAGE.
3. Inscriptions for Orange-Colored Tapes: TELEPHONE CABLE, CATV CABLE, COMMUNICATIONS CABLE, OPTICAL FIBER CABLE.

C. Tag: Type ID (600V and less):

1. Detectable three-layer laminate, consisting of a printed pigmented polyolefin film, a solid aluminum-foil core, and a clear protective film that allows inspection of the continuity of the conductive core, bright-colored, continuous-printed on one side with the inscription of the utility, compounded for direct-burial service.
2. Overall Thickness: 5 mils
3. Foil Core Thickness: 0.35 mil.
4. Weight: 28 lb/1000 sq. ft..
5. 3-InchTensile According to ASTM D 882: 70 lbf and 4600 psi

2.5 WARNING LABELS AND SIGNS

A. Comply with NFPA 70 and 29 CFR 1910.145.

B. Baked-Enamel Warning Signs: (For external use)

1. Preprinted aluminum signs, punched or drilled for fasteners, with colors, legend, and size required for application.
2. 1/4-inchgrommets in corners for mounting.
3. Nominal size, 7 by 10 inches

C. Metal-Backed, Butyrate Warning Signs: (For external use)

1. Weather-resistant, non-fading, preprinted, cellulose-acetate butyrate signs with 0.0396-inchgalvanized-steel backing; and with colors, legend, and size required for application.
2. 1/4-inchgrommets in corners for mounting.
3. Nominal size, 10 by 14 inches

D. Warning label and sign shall include, but are not limited to, the following legends:

1. Multiple Power Source Warning: "DANGER - ELECTRICAL SHOCK HAZARD - EQUIPMENT HAS MULTIPLE POWER SOURCES."
2. Workspace Clearance Warning: "WARNING - OSHA REGULATION - AREA IN FRONT OF ELECTRICAL EQUIPMENT MUST BE KEPT CLEAR FOR 36 INCHES."

2.6 INSTRUCTION SIGNS

A. Engraved, laminated acrylic or melamine plastic, minimum 1/16 inch thick for signs up to 20 sq. inches and 1/8 inch thick for larger sizes.

1. Engraved legend with black letters on white face.
2. Punched or drilled for mechanical fasteners.
3. Framed with mitered acrylic molding and arranged for attachment at applicable equipment.

2.7 EQUIPMENT IDENTIFICATION LABELS

A. Engraved, Laminated Acrylic or Melamine Label: Punched or drilled for screw mounting. White letters on a dark-gray background. Minimum letter height shall be 3/8 inch

2.8 CABLE TIES

A. UV-Stabilized Cable Ties: Fungus inert, designed for continuous exposure to exterior sunlight, self extinguishing, one piece, self locking, Type 6/6 nylon.

1. Minimum Width: 3/16 inch
2. Tensile Strength at 73 deg F, According to ASTM D 638: 12,000 psi.
3. Temperature Range: Minus 40 to plus 185 deg F.
4. Color: Black.

2.9 MISCELLANEOUS IDENTIFICATION PRODUCTS

A. Paint: Comply with requirements in Division 09 painting Sections for paint materials and application requirements. Select paint system applicable for surface material and location (exterior or interior).

B. Fasteners for Labels and Signs: Self-tapping, stainless-steel screws or stainless-steel machine screws with nuts and flat and lock washers.

PART 3 - EXECUTION

3.1 INSTALLATION

A. Verify identity of each item before installing identification products.

B. Location: Install identification materials and devices at locations for most convenient viewing without interference with operation and maintenance of equipment.

C. Apply identification devices to surfaces that require finish after completing finish work.

D. Attach signs and plastic labels that are not self-adhesive type with mechanical fasteners appropriate to the location and substrate.

E. Cable Ties: For attaching tags. Use general-purpose type, except as listed below:

1. Outdoors: UV-stabilized nylon.

F. Underground-Line Warning Tape: During backfilling of trenches install continuous underground-line warning tape directly above line at 6 to 8 inches below finished grade. Use multiple tapes where width of multiple lines installed in a common trench or concrete envelope exceeds 16 inches overall.

G. Painted Identification: Comply with requirements in Division 09 painting Sections for surface preparation and paint application.

3.2 IDENTIFICATION SCHEDULE

A. Power-Circuit Conductor Identification, 600 V or Less: For conductors in vaults, pull and junction boxes, manholes, and handholes, use color-coding conductor tape to identify the phase.

1. Color-Coding for Phase and Voltage Level Identification, 600 V or Less: Use colors listed below for ungrounded service feeder and branch-circuit conductors.

a. Color shall be factory applied or field applied for sizes larger than No. 8 AWG.
b. Colors for 208/120-V Circuits:

1) Phase A: Black.
2) Phase B: Red.
3) Phase C: Blue.

c. Field-Applied, Color-Coding Conductor Tape: Apply in half-lapped turns for a minimum distance of 6 inches from terminal points and in boxes where splices or taps are made. Apply last two turns of tape with no tension to prevent possible unwinding. Locate bands to avoid obscuring factory cable markings.

B. Power-Circuit Conductor Identification, More than 600 V: For conductors in vaults, pull and junction boxes, manholes, and handholes, use nonmetallic plastic tag holder with adhesive-backed phase tags, and a separate tag with the circuit designation.

C. Install instructional sign including the color-code for grounded and ungrounded conductors using adhesive-film-type labels.

D. Conductors to Be Extended in the Future: Attach write-on tags to conductors and list source.

E. Auxiliary Electrical Systems Conductor Identification: Identify field-installed alarm, control, and signal connections.

1. Identify conductors, cables, and terminals in enclosures and at junctions, terminals, and pull points. Identify by system and circuit designation.
2. Use system of marker tape designations that is uniform and consistent with system used by manufacturer for factory-installed connections.
3. Coordinate identification with Project Drawings, manufacturer's wiring diagrams, and the Operation and Maintenance Manual.

F. Locations of Underground Lines: Identify with underground-line warning tape for power, lighting, communication, and control wiring and optical fiber cable.

1. Limit use of underground-line warning tape to direct-buried cables.
2. Install underground-line warning tape for both direct-buried cables and cables in raceway.

G. Warning Labels for Indoor Cabinets, Boxes, and Enclosures for Power and Lighting: Baked-enamel warning signs.

1. Comply with 29 CFR 1910.145.
2. Identify system voltage with black letters on an orange background.
3. Apply to exterior of door, cover, or other access.
4. For equipment with multiple power or control sources, apply to door or cover of equipment including, but not limited to, the following:

a. Power transfer switches.
b. Controls with external control power connections.

H. Operating Instruction Signs: Install instruction signs to facilitate proper operation and maintenance of electrical systems and items to which they connect. Install instruction signs with approved legend where instructions are needed for system or equipment operation.

I. Emergency Operating Instruction Signs: Install instruction signs with white legend on a red background with minimum 3/8-inch-high letters for emergency instructions at equipment used for power transfer.

J. Equipment Identification Labels: On each unit of equipment, install unique designation label that is consistent with wiring diagrams, schedules, and the Operation and Maintenance Manual. Apply labels to disconnect switches and protection equipment, central or master units, control panels, control stations, terminal cabinets, and racks of each system. Systems include power, lighting, control, communication, signal, monitoring, and alarm systems unless equipment is provided with its own identification.

1. Labeling Instructions:

   a. Outdoor Equipment: Engraved, laminated acrylic or melamine label.
   b. Means of attachment, fasten labels with appropriate mechanical fasteners that do not change the NEMA or NRTL rating of the enclosure.

2. Equipment to Be Labeled:

   a. Panelboards: Typewritten directory of circuits in the location provided by panelboard manufacturer. Panelboard identification shall be engraved, laminated acrylic or melamine label.
   b. Enclosures and electrical cabinets.
   c. Access doors and panels for concealed electrical items.
   d. Control cabinets and panelboards.
   e. Transformers: Label that includes tag designation shown on Drawings for the transformer, feeder, and panelboards or equipment supplied by the secondary.
   f. Substations.
   g. Emergency system boxes and enclosures.
   h. Enclosed switches.
   i. Enclosed circuit breakers.
   j. Enclosed controllers.
   k. Contactors.
   l. Remote-controlled switches, dimmer modules, and control devices.
   m. Battery-inverter units.
   n. Monitoring and control equipment.

END OF SECTION 260553

SECTION 260573 – OVERCURRENT PROTECTIVE DEVICE COORDINATION STUDY

PART 1 - GENERAL

1.1 RELATED DOCUMENTS

A. Drawings and general provisions of the Contract, including General and Supplementary Conditions and Division 01 Specification Sections, apply to this Section.

1.2 SUMMARY

A. This Section includes computer-based, fault-current and overcurrent protective device coordination studies. Protective devices shall be set based on results of the protective device coordination study.

1. Coordination of series-rated devices is permitted where indicated on Drawings.

1.3 ACTION SUBMITTALS

A. Product Data: For computer software program to be used for studies.

B. Other Action Submittals: The following submittals shall be made after the approval process for system protective devices has been completed. Submittals shall be in digital format.

1. Coordination-study input data, including completed computer program input data sheets.
2. Study and Equipment Evaluation Reports.
3. Coordination-Study Report.

1.4 INFORMATIONAL SUBMITTALS

A. Qualification Data: For coordination-study specialist.

B. Product Certificates: For coordination-study and fault-current-study computer software programs, certifying compliance with IEEE 399.

1.5 QUALITY ASSURANCE

A. Studies shall use computer programs that are distributed nationally and are in wide use. Software algorithms shall comply with requirements of standards and guides specified in this Section. Manual calculations are not acceptable.

B. Coordination-Study Specialist Qualifications: An entity experienced in the application of computer software used for studies, having performed successful studies of similar magnitude on electrical distribution systems using similar devices.

1. Professional engineer, licensed in the state where Project is located, shall be responsible for the study. All elements of the study shall be performed under the direct supervision and control of engineer.

C. Comply with IEEE 242 for short-circuit currents and coordination time intervals.

D. Comply with IEEE 399 for general study procedures.

PART 2 - PRODUCTS

2.1 COMPUTER SOFTWARE DEVELOPERS

A. Available Computer Software Developers: Subject to compliance with requirements, companies offering computer software programs that may be used in the Work include, but are not limited to, the following:

B. Computer Software Developers: Subject to compliance with requirements, provide products by one of the following:

C. Basis-of-Design Product: Subject to compliance with requirements, provide a comparable product by one of the following:

1. CGI CYME.
2. EDSA Micro Corporation.
3. ESA Inc.
4. Operation Technology, Inc.
5. SKM Systems Analysis, Inc.

2.2 COMPUTER SOFTWARE PROGRAM REQUIREMENTS

A. Comply with IEEE 399.

B. Analytical features of fault-current-study computer software program shall include "mandatory," "very desirable," and "desirable" features as listed in IEEE 399.

C. Computer software program shall be capable of plotting and diagramming time-current-characteristic curves as part of its output. Computer software program shall report device settings and ratings of all overcurrent protective devices and shall demonstrate selective coordination by computer-generated, time-current coordination plots.

1. Optional Features:

a. Arcing faults.
b. Simultaneous faults.
c. Explicit negative sequence.
d. Mutual coupling in zero sequence.

PART 3 - EXECUTION

3.1 EXAMINATION

A. Examine Project overcurrent protective device submittals for compliance with electrical distribution system coordination requirements and other conditions affecting performance. Devices to be coordinated are indicated on Drawings.

1. Proceed with coordination study only after relevant equipment submittals have been assembled. Overcurrent protective devices that have not been submitted and approved prior to coordination study may not be used in study.

3.2 POWER SYSTEM DATA

A. Gather and tabulate the following input data to support coordination study:

1. Product Data for overcurrent protective devices specified in other electrical Sections and involved in overcurrent protective device coordination studies. Use equipment designation tags that are consistent with electrical distribution system diagrams, overcurrent protective device submittals, input and output data, and recommended device settings.
2. Impedance of utility service entrance.
3. Electrical Distribution System Diagram: In hard-copy and electronic-copy formats, showing the following:

    a. Circuit-breaker and fuse-current ratings and types.
    b. Relays and associated power and current transformer ratings and ratios.
    c. Transformer kilovolt amperes, primary and secondary voltages, connection type, impedance, and X/R ratios.
    d. Cables: Indicate conduit material, sizes of conductors, conductor material, insulation, and length.
    e. Busway ampacity and impedance.

4. Data sheets to supplement electrical distribution system diagram, cross-referenced with tag numbers on diagram, showing the following:

    a. Special load considerations, including starting inrush currents and frequent starting and stopping.
    b. Transformer characteristics, including primary protective device, magnetic inrush current, and overload capability.
    c. Ratings, types, and settings of utility company's overcurrent protective devices.
    d. Special overcurrent protective device settings or types stipulated by utility company.
    e. Time-current-characteristic curves of devices indicated to be coordinated.
    f. Manufacturer, frame size, interrupting rating in amperes rms symmetrical, ampere or current sensor rating, long-time adjustment range, short-time adjustment range, and instantaneous adjustment range for circuit breakers.

g. Manufacturer and type, ampere-tap adjustment range, time-delay adjustment range, instantaneous attachment adjustment range, and current transformer ratio for overcurrent relays.
h. Panelboards, switchboards, motor-control center ampacity, and interrupting rating in amperes rms symmetrical.

3.3 FAULT-CURRENT STUDY

A. Calculate the maximum available short-circuit current in amperes rms symmetrical at circuit-breaker positions of the electrical power distribution system. The calculation shall be for a current immediately after initiation and for a three-phase bolted short circuit at each of the following:

1. Distribution panelboard.
2. Branch circuit panelboard.

B. Study electrical distribution system from normal and alternate power sources throughout electrical distribution system for Project. Include studies of system-switching configurations and alternate operations that could result in maximum fault conditions.

C. Calculate momentary and interrupting duties on the basis of maximum available fault current.

D. Calculations to verify interrupting ratings of overcurrent protective devices shall comply with IEEE 141 and IEEE 242.

1. Transformers:

a. ANSI C57.12.10.
b. ANSI C57.12.22.
c. ANSI C57.12.40.
d. IEEE C57.12.00.
e. IEEE C57.96.

2. Medium-Voltage Circuit Breakers: IEEE C37.010.
3. Low-Voltage Circuit Breakers: IEEE 1015 and IEEE C37.20.1.
4. Low-Voltage Fuses: IEEE C37.46.

E. Study Report:

1. Show calculated X/R ratios and equipment interrupting rating (1/2-cycle) fault currents on electrical distribution system diagram.
2. Show interrupting (5-cycle) and time-delayed currents (6 cycles and above) on medium- and high-voltage breakers as needed to set relays and assess the sensitivity of overcurrent relays.

F. Equipment Evaluation Report:

1. For 600-V overcurrent protective devices, ensure that interrupting ratings are equal to or higher than calculated 1/2-cycle symmetrical fault current.

2. For devices and equipment rated for asymmetrical fault current, apply multiplication factors listed in the standards to 1/2-cycle symmetrical fault current.
3. Verify adequacy of phase conductors at maximum three-phase bolted fault currents; verify adequacy of equipment grounding conductors and grounding electrode conductors at maximum ground-fault currents. Ensure that short-circuit withstand ratings are equal to or higher than calculated 1/2-cycle symmetrical fault current.

3.4 COORDINATION STUDY

A. Perform coordination study using approved computer software program. Prepare a written report using results of fault-current study. Comply with IEEE 399.

1. Calculate the maximum and minimum 1/2-cycle short-circuit currents.
2. Calculate the maximum and minimum interrupting duty (5 cycles to 2 seconds) short-circuit currents.
3. Calculate the maximum and minimum ground-fault currents.

B. Comply with IEEE 141, IEEE 242 recommendations for fault currents and time intervals.

C. Transformer Primary Overcurrent Protective Devices:

1. Device shall not operate in response to the following:

a. Inrush current when first energized.
b. Self-cooled, full-load current or forced-air-cooled, full-load current, whichever is specified for that transformer.
c. Permissible transformer overloads according to IEEE C57.96 if required by unusual loading or emergency conditions.

2. Device settings shall protect transformers according to IEEE C57.12.00, for fault currents.

D. Motors served by voltages more than 600 V shall be protected according to IEEE 620.

E. Conductor Protection: Protect cables against damage from fault currents according to ICEA P-32-382, ICEA P-45-482, and conductor melting curves in IEEE 242. Demonstrate that equipment withstands the maximum short-circuit current for a time equivalent to the tripping time of the primary relay protection or total clearing time of the fuse. To determine temperatures that damage insulation, use curves from cable manufacturers or from listed standards indicating conductor size and short-circuit current.

F. Coordination-Study Report: Prepare a written report indicating the following results of coordination study:

1. Tabular Format of Settings Selected for Overcurrent Protective Devices:

a. Device tag.
b. Relay-current transformer ratios; and tap, time-dial, and instantaneous-pickup values.

c. Circuit-breaker sensor rating; and long-time, short-time, and instantaneous settings.
d. Fuse-current rating and type.
e. Ground-fault relay-pickup and time-delay settings.

2. Coordination Curves: Prepared to determine settings of overcurrent protective devices to achieve selective coordination. Graphically illustrate that adequate time separation exists between devices installed in series, including power utility company's upstream devices. Prepare separate sets of curves for the switching schemes and for emergency periods where the power source is local generation. Show the following information:

a. Device tag.
b. Voltage and current ratio for curves.
c. Three-phase and single-phase damage points for each transformer.
d. No damage, melting, and clearing curves for fuses.
e. Cable damage curves.
f. Transformer inrush points.
g. Maximum fault-current cutoff point.

G. Completed data sheets for setting of overcurrent protective devices.

END OF SECTION 260573

SECTION 260923 - LIGHTING CONTROL DEVICES

PART 1 - GENERAL

1.1 SUMMARY

A. This Section includes the following lighting control devices:

1. Outdoor photoelectric switches.
2. Lighting contactors.

1.2 SUBMITTALS

A. Product Data: For each type of product indicated.

B. Field quality-control test reports.

C. Operation and maintenance data.

1.3 QUALITY ASSURANCE

A. Electrical Components, Devices, and Accessories: Listed and labeled as defined in NFPA 70, Article 100, by a testing agency acceptable to authorities having jurisdiction, and marked for intended use.

PART 2 - PRODUCTS

2.1 OUTDOOR PHOTOELECTRIC SWITCHES

A. Available Manufacturers: Subject to compliance with requirements, manufacturers offering products that may be incorporated into the Work include, but are not limited to, the following:

1. Intermatic, Inc.
2. Paragon Electric Co.; Invensys Climate Controls.
3. TORK.

B. Description: Solid state, with SPST dry contacts rated for 1800 VA to operate connected load, relay, or contactor coils; complying with UL 773.

1. Light-Level Monitoring Range: 1.5 to 10 fc, with an adjustment for turn-on and turn-off levels within that range.
2. Time Delay: 30-second minimum, to prevent false operation.
3. Lightning Arrester: Air-gap type.
4. Mounting: Twist lock complying with IEEE C136.10, with base.

2.2 LIGHTING CONTACTORS

A. Available Manufacturers: Subject to compliance with requirements, manufacturers offering products that may be incorporated into the Work include, but are not limited to, the following:

1. ASCO Power Technologies, LP; a division of Emerson Electric Co.

2. Eaton Electrical Inc.; Cutler-Hammer Products.
3. Square D; Schneider Electric.

B. Description: Electrically operated and electrically held, combination type with non-fused disconnect, complying with NEMA ICS 2 and UL 508.

1. Current Rating for Switching: Listing or rating consistent with type of load served, including tungsten filament, inductive, and high-inrush ballast (ballast with 15 percent or less total harmonic distortion of normal load current).
2. Fault Current Withstand Rating: Equal to or exceeding the available fault current at the point of installation.
3. Enclosure: Comply with NEMA 250.
4. Provide with control and pilot devices as indicated on Drawings, matching the NEMA type specified for the enclosure.

2.3 CONDUCTORS AND CABLES

A. Power Wiring to Supply Side of Remote-Control Power Sources: Not smaller than No. 12 AWG. Comply with requirements in Division 26 Section "Low-Voltage Electrical Power Conductors and Cables."

PART 3 - EXECUTION

3.1 SENSOR INSTALLATION

A. Install and aim sensors in locations to achieve not less than 90 percent coverage of areas indicated. Do not exceed coverage limits specified in manufacturer's written instructions.

3.2 CONTACTOR INSTALLATION

A. Mount electrically held lighting contactors with elastomeric isolator pads, to eliminate structure-borne vibration, unless contactors are installed in an enclosure with factory-installed vibration isolators.

3.3 WIRING INSTALLATION

A. Wiring Method: Comply with Division 26 Section "Low-Voltage Electrical Power Conductors and Cables." Minimum conduit size shall be 1/2 inch.

B. Wiring within Enclosures: Comply with NECA 1. Separate power-limited and non-power-limited conductors according to conductor manufacturer's written instructions.

C. Size conductors according to lighting control device manufacturer's written instructions, unless otherwise indicated.

D. Splices, Taps, and Terminations: Make connections only on numbered terminal strips in junction, pull, and outlet boxes; terminal cabinets; and equipment enclosures.

3.4 IDENTIFICATION

A. Identify components and power and control wiring according to Division 26 Section "Identification for Electrical Systems."

1. Identify controlled circuits in lighting contactors.
2. Identify circuits or luminaries controlled by photoelectric and occupancy sensors at each sensor.

3.5 FIELD QUALITY CONTROL

A. Perform the following field tests and inspections and prepare test reports:

1. After installing time switches and sensors, and after electrical circuitry has been energized, adjust and test for compliance with requirements.
2. Operational Test: Verify operation of each lighting control device, and adjust time delays.

B. Lighting control devices that fail tests and inspections are defective work.

END OF SECTION 260923

SECTION 262416 - PANELBOARDS

PART 1 - GENERAL

1.1 RELATED DOCUMENTS

A. Drawings and general provisions of the Contract, including General and Supplementary Conditions and Division 01 Specification Sections, apply to this Section.

1.2 SUMMARY

A. Section Includes:

1. Distribution panelboards.
2. Lighting branch-circuit panelboards.
3. Electronic-grade panelboards.

1.3 DEFINITIONS

A. SVR: Suppressed voltage rating.

B. TVSS: Transient voltage surge suppressor.

1.4 PERFORMANCE REQUIREMENTS

A. Seismic Performance: Panelboards shall withstand the effects of earthquake motions determined according to SEI/ASCE 7.

1. The term "withstand" means "the unit will remain in place without separation of any parts from the device when subjected to the seismic forces specified and the unit will be fully operational after the seismic event."

1.5 SUBMITTALS

A. Product Data: For each type of panelboard, switching and overcurrent protective device, transient voltage suppression device, accessory, and component indicated. Include dimensions and manufacturers' technical data on features, performance, electrical characteristics, ratings, and finishes.

B. Shop Drawings: For each panelboard and related equipment.

1. Include dimensioned plans, elevations, sections, and details. Show tabulations of installed devices, equipment features, and ratings.
2. Detail enclosure types and details for types other than NEMA 250, Type 1.
3. Detail bus configuration, current, and voltage ratings.
4. Short-circuit current rating of panelboards and overcurrent protective devices.
5. Detail features, characteristics, ratings, and factory settings of individual overcurrent protective devices and auxiliary components.

6. Include wiring diagrams for power, signal, and control wiring.
7. Include time-current coordination curves for each type and rating of overcurrent protective device included in panelboards. Submit on translucent log-log graft paper; include selectable ranges for each type of overcurrent protective device.

C. Seismic Qualification Certificates: Submit certification that panelboards, overcurrent protective devices, accessories, and components will withstand seismic forces defined in Division 26 Section "Vibration and Seismic Controls for Electrical Systems." Include the following:

1. Basis for Certification: Indicate whether withstand certification is based on actual test of assembled components or on calculation.
2. Dimensioned Outline Drawings of Equipment Unit: Identify center of gravity and locate and describe mounting and anchorage provisions.
3. Detailed description of equipment anchorage devices on which the certification is based and their installation requirements.

D. Field Quality-Control Reports:

1. Test procedures used.
2. Test results that comply with requirements.
3. Results of failed tests and corrective action taken to achieve test results that comply with requirements.

E. Panelboard Schedules: For installation in panelboards. Submit final versions after load balancing.

F. Operation and Maintenance Data: For panelboards and components to include in emergency, operation, and maintenance manuals. In addition to items specified in Division 01 Section "Operation and Maintenance Data," include the following:

1. Manufacturer's written instructions for testing and adjusting overcurrent protective devices.
2. Time-current curves, including selectable ranges for each type of overcurrent protective device that allows adjustments.

1.6 QUALITY ASSURANCE

A. Source Limitations: Obtain panelboards, overcurrent protective devices, components, and accessories from single source from single manufacturer.

B. Product Selection for Restricted Space: Drawings indicate maximum dimensions for panelboards including clearances between panelboards and adjacent surfaces and other items. Comply with indicated maximum dimensions.

C. Electrical Components, Devices, and Accessories: Listed and labeled as defined in NFPA 70, by a qualified testing agency, and marked for intended location and application.

D. Comply with NEMA PB 1.

E. Comply with NFPA 70.

1.7 DELIVERY, STORAGE, AND HANDLING

A. Remove loose packing and flammable materials from inside panelboards; install temporary electric heating (250 W per panelboard) to prevent condensation.

B. Handle and prepare panelboards for installation according to NEMA PB 1.

1.8 PROJECT CONDITIONS

A. Environmental Limitations:

1. Do not deliver or install panelboards until spaces are enclosed and weather-tight, wet work in spaces is complete and dry and work above panelboards is complete.
2. Rate equipment for continuous operation under the following conditions unless otherwise indicated:

   a. Ambient Temperature: Not exceeding 23 deg F to plus 104 deg F.
   b. Altitude: Not exceeding 6600 feet.

B. Service Conditions: NEMA PB 1, usual service conditions, as follows:

1. Ambient temperatures within limits specified.
2. Altitude not exceeding 6600 feet.

1.9 COORDINATION

A. Coordinate layout and installation of panelboards and components with other construction that penetrates walls or is supported by them, including electrical and other types of equipment, raceways, piping, encumbrances to workspace clearance requirements, and adjacent surfaces. Maintain required workspace clearances and required clearances for equipment access doors and panels.

1.10 WARRANTY

A. Special Warranty: Manufacturer's standard form in which manufacturer agrees to repair or replace transient voltage suppression devices that fail in materials or workmanship within specified warranty period.

1. Warranty Period: Two years from date of Substantial Completion.

1.11 EXTRA MATERIALS

A. Furnish extra materials that match products installed and that are packaged with protective covering for storage and identified with labels describing contents.

1. Keys: Two spares for each type of panelboard cabinet lock.
2. Circuit Breakers Including GFCI and Ground Fault Equipment Protection (GFEP) Types: Two spares for each panelboard.

3. Fuses for Fused Switches: Equal to 10 percent of quantity installed for each size and type, but no fewer than three of each size and type.
4. Fuses for Fused Power-Circuit Devices: Equal to 10 percent of quantity installed for each size and type, but no fewer than three of each size and type.

PART 2 - PRODUCTS

2.1 GENERAL REQUIREMENTS FOR PANELBOARDS

A. Fabricate and test panelboards according to IEEE 344 to withstand seismic forces defined in Division 26 Section "Vibration and Seismic Controls for Electrical Systems."

B. Enclosures: Flush- and surface-mounted cabinets.

1. Rated for environmental conditions at installed location.

   a. Indoor Dry and Clean Locations: NEMA 250, Type 1.
   b. Outdoor Locations: NEMA 250, Type 3R.

2. Hinged Front Cover: Entire front trim hinged to box and with standard door within hinged trim cover.
3. Skirt for Surface-Mounted Panelboards: Same gage and finish as panelboard front with flanges for attachment to panelboard, wall, and ceiling or floor.
4. Gutter Extension and Barrier: Same gage and finish as panelboard enclosure; integral with enclosure body. Arrange to isolate individual panel sections.
5. Finishes:

   a. Panels and Trim: Steel, factory finished immediately after cleaning and pretreating with manufacturer's standard two-coat, baked-on finish consisting of prime coat and thermosetting topcoat.
   b. Back Boxes: Same finish as panels and trim.

6. Directory Card: Inside panelboard door, mounted in transparent card holder

C. Phase, Neutral, and Ground Buses:

1. Material: Hard-drawn copper, 98 percent conductivity.
2. Equipment Ground Bus: Adequate for feeder and branch-circuit equipment grounding conductors; bonded to box.
3. Isolated Ground Bus: Adequate for branch-circuit isolated ground conductors; insulated from box.
4. Extra-Capacity Neutral Bus: Neutral bus rated 200 percent of phase bus and UL listed as suitable for nonlinear loads.
5. Split Bus: Vertical buses divided into individual vertical sections.

D. Conductor Connectors: Suitable for use with conductor material and sizes.

1. Material: Tin-plated aluminum.
2. Main and Neutral Lugs: Mechanical type.
3. Ground Lugs and Bus-Configured Terminators: Mechanical type.

4. Feed-Through Lugs: Mechanical type, suitable for use with conductor material. Locate at opposite end of bus from incoming lugs or main device.
5. Sub-feed (Double) Lugs: Mechanical type suitable for use with conductor material. Locate at same end of bus as incoming lugs or main device.
6. Gutter-Tap Lugs: Mechanical type suitable for use with conductor material. Locate at same end of bus as incoming lugs or main device.
7. Extra-Capacity Neutral Lugs: Rated 200 percent of phase lugs mounted on extra-capacity neutral bus.

E. Future Devices: Mounting brackets, bus connections, filler plates, and necessary appurtenances required for future installation of devices.

F. Panelboard Short-Circuit Current Rating: Fully rated to interrupt symmetrical short-circuit current available at terminals.

2.2 DISTRIBUTION PANELBOARDS

A. Manufacturers: Subject to compliance with requirements, available manufacturers offering products that may be incorporated into the Work include, but are not limited to, the following:

1. Eaton Electrical Inc.; Cutler-Hammer Business Unit.
2. General Electric Company; GE Consumer & Industrial - Electrical Distribution.
3. Siemens Energy & Automation, Inc.
4. Square D; a brand of Schneider Electric.

B. Panelboards: NEMA PB 1, power and feeder distribution type.

C. Doors: Secured with vault-type latch with tumbler lock; keyed alike.

1. For doors more than 36 inches high, provide two latches, keyed alike.

D. Branch Overcurrent Protective Devices for Circuit-Breaker Frame Sizes Larger Than 125 A: Bolt-on circuit breakers; plug-in circuit breakers where individual positive-locking device requires mechanical release for removal.

E. Contactors in Main Bus: NEMA ICS 2, Class A, mechanically held, general-purpose controller, with same short-circuit interrupting rating as panelboard.
1. External Control-Power Source: 120-V branch circuit

2.3 LIGHTING BRANCH-CIRCUIT PANELBOARDS

A. Manufacturers: Subject to compliance with requirements, available manufacturers offering products that may be incorporated into the Work include, but are not limited to, the following:

1. Eaton Electrical Inc.; Cutler-Hammer Business Unit.
2. General Electric Company; GE Consumer & Industrial - Electrical Distribution.
3. Siemens Energy & Automation, Inc.
4. Square D; a brand of Schneider Electric.

B. Panelboards: NEMA PB 1, lighting and appliance branch-circuit type.

C. Branch Overcurrent Protective Devices: Bolt-on circuit breakers, replaceable without disturbing adjacent units.

D. Contactors in Main Bus: NEMA ICS 2, Class A, mechanically held, general-purpose controller, with same short-circuit interrupting rating as panelboard.
   1. External Control-Power Source: 120-V branch circuit.

E. Doors: Concealed hinges; secured with flush latch with tumbler lock; keyed alike.

2.4 ELECTRONIC-GRADE PANELBOARDS

A. Manufacturers: Subject to compliance with requirements, available manufacturers offering products that may be incorporated into the Work include, but are not limited to, the following:

   1. Current Technology; a subsidiary of Danahar Corporation.
   2. Eaton Electrical Inc.; Cutler-Hammer Business Unit.
   3. General Electric Company; GE Consumer & Industrial - Electrical Distribution.
   4. Liebert Corporation.
   5. Siemens Energy & Automation, Inc.
   6. Square D; a brand of Schneider Electric.

B. Panelboards: NEMA PB 1; with factory-installed, integral TVSS; labeled by an NRTL for compliance with UL 67 after installing TVSS.

C. Doors: Secured with vault-type latch with tumbler lock; keyed alike.

D. Main Overcurrent Protective Devices: Bolt-on thermal-magnetic circuit breakers.

E. Branch Overcurrent Protective Devices: Bolt-on thermal-magnetic circuit breakers.

F. Buses:

   1. Copper phase and neutral buses; 200 percent capacity neutral bus and lugs.
   2. Copper equipment and isolated ground buses.

2.5 DISCONNECTING AND OVERCURRENT PROTECTIVE DEVICES

A. Manufacturers: Subject to compliance with requirements, available manufacturers offering products that may be incorporated into the Work include, but are not limited to, the following:

   1. Eaton Electrical Inc.; Cutler-Hammer Business Unit.
   2. General Electric Company; GE Consumer & Industrial - Electrical Distribution.
   3. Siemens Energy & Automation, Inc.
   4. Square D; a brand of Schneider Electric.

B. Molded-Case Circuit Breaker (MCCB): Comply with UL 489, with interrupting capacity to meet available fault currents.

1. Thermal-Magnetic Circuit Breakers: Inverse time-current element for low-level overloads, and instantaneous magnetic trip element for short circuits. Adjustable magnetic trip setting for circuit-breaker frame sizes 250 A and larger.
2. GFCI Circuit Breakers: Single- and two-pole configurations with Class A ground-fault protection (6-mA trip).
3. Ground-Fault Equipment Protection (GFEP) Circuit Breakers: Class B ground-fault protection (30-mA trip).
4. Molded-Case Circuit-Breaker (MCCB) Features and Accessories:

    a. Standard frame sizes, trip ratings, and number of poles.
    b. Lugs: Mechanical style, suitable for number, size, trip ratings, and conductor materials.
    c. Application Listing: Appropriate for application; Type SWD for switching fluorescent lighting loads; Type HID for feeding fluorescent and high-intensity discharge (HID) lighting circuits.
    d. Ground-Fault Protection: Integrally mounted relay and trip unit with adjustable pickup and time-delay settings, push-to-test feature, and ground-fault indicator.
    e. Handle Padlocking Device: Fixed attachment, for locking circuit-breaker handle in on or off position.
    f. Handle Clamp: Loose attachment, for holding circuit-breaker handle in on position.

2.6 ACCESSORY COMPONENTS AND FEATURES

A. Accessory Set: Include tools and miscellaneous items required for overcurrent protective device test, inspection, maintenance, and operation.

PART 3 - EXECUTION

3.1 EXAMINATION

A. Receive, inspect, handle, and store panelboards according to NEMA PB 1.1.

B. Examine panelboards before installation. Reject panelboards that are damaged or rusted or have been subjected to water saturation.

C. Examine elements and surfaces to receive panelboards for compliance with installation tolerances and other conditions affecting performance of the Work.

D. Proceed with installation only after unsatisfactory conditions have been corrected.

3.2 INSTALLATION

A. Install panelboards and accessories according to NEMA PB 1.1.

B. Comply with mounting and anchoring requirements specified in Division 26 Section "Vibration and Seismic Controls for Electrical Systems."

C. Mount panelboard cabinet plumb and rigid without distortion of box. Mount recessed panelboards with fronts uniformly flush with wall finish and mating with back-box.

D. Install overcurrent protective devices and controllers not already factory installed.

1. Set field-adjustable, circuit-breaker trip ranges.

E. Install filler plates in unused spaces.

F. Arrange conductors in gutters into groups and bundle and wrap with wire ties after completing load balancing.

G. Comply with NECA 1.

3.3 IDENTIFICATION

A. Identify field-installed conductors, interconnecting wiring, and components; provide warning signs complying with Division 26 Section "Identification for Electrical Systems."

B. Create a directory to indicate installed circuit loads after balancing panelboard loads; incorporate Owner's final room designations. Obtain approval before installing. Use a computer or typewriter to create directory; handwritten directories are not acceptable.

C. Panelboard Nameplates: Label each panelboard with a nameplate complying with requirements for identification specified in Division 26 Section "Identification for Electrical Systems."

D. Device Nameplates: Label each branch circuit device in distribution panelboards with a nameplate complying with requirements for identification specified in Division 26 Section "Identification for Electrical Systems."

3.4 FIELD QUALITY CONTROL

A. Testing Agency: Engage a qualified testing agency to perform tests and inspections.

B. Acceptance Testing Preparation:

1. Test insulation resistance for each panelboard bus, component, connecting supply, feeder, and control circuit.
2. Test continuity of each circuit.

C. Tests and Inspections:

1. Perform each visual and mechanical inspection and electrical test stated in NETA Acceptance Testing Specification. Certify compliance with test parameters.
2. Correct malfunctioning units on-site, where possible, and retest to demonstrate compliance; otherwise, replace with new units and retest.
3. Perform the following infrared scan tests and inspections and prepare reports:

a. Initial Infrared Scanning: After Substantial Completion, but not more than 60 days after Final Acceptance, perform an infrared scan of each panelboard. Remove front panels so joints and connections are accessible to portable scanner.

b. Follow-up Infrared Scanning: Perform an additional follow-up infrared scan of each panelboard 11 months after date of Substantial Completion.

c. Instruments and Equipment:

1) Use an infrared scanning device designed to measure temperature or to detect significant deviations from normal values. Provide calibration record for device.

D. Panelboards will be considered defective if they do not pass tests and inspections.

E. Prepare test and inspection reports, including a certified report that identifies panelboards included and that describes scanning results. Include notation of deficiencies detected, remedial action taken, and observations after remedial action.

3.5 ADJUSTING

A. Adjust moving parts and operable component to function smoothly, and lubricate as recommended by manufacturer.

B. Set field-adjustable circuit-breaker trip ranges as specified in Division 26 Section "Overcurrent Protective Device Coordination Study."

C. Load Balancing: After Substantial Completion, but not more than 60 days after Final Acceptance, measure load balancing and make circuit changes.

1. Measure as directed during period of normal system loading.
2. Perform load-balancing circuit changes outside normal occupancy/working schedule of the facility and at time directed. Avoid disrupting critical 24-hour services such as fax machines and on-line data processing, computing, transmitting, and receiving equipment.
3. After circuit changes, recheck loads during normal load period. Record all load readings before and after changes and submit test records.
4. Tolerance: Difference exceeding 20 percent between phase loads, within a panelboard, is not acceptable. Rebalance and recheck as necessary to meet this minimum requirement.

3.6 PROTECTION

A. Temporary Heating: Apply temporary heat to maintain temperature according to manufacturer's written instructions.

END OF SECTION 262416

SECTION 262713 – ELECTRICITY METERING

PART 1 - GENERAL

1.1 RELATED DOCUMENTS

A. Drawings and general provisions of the Contract, including General and Supplementary Conditions and Division 01 Specification Sections, apply to this Section.

1.2 SUMMARY

A. Section includes equipment for electricity metering by utility company.

1.3 DEFINITIONS

A. KY Pulse: Term used by the metering industry to describe a method of measuring consumption of electricity that is based on a relay opening and closing in response to the rotation of the disk in the meter.

B. PC: Personal computer.

1.4 ACTION SUBMITTALS

A. Product Data: For each type of product indicated.

B. Shop Drawings: For electricity-metering equipment.

1. Dimensioned plans and sections or elevation layouts.
2. Wiring Diagrams: For power, signal, and control wiring. Identify terminals and wiring designations and color-codes to facilitate installation, operation, and maintenance. Indicate recommended types, wire sizes, and circuiting arrangements for field-installed wiring, and show circuit protection features.

1.5 INFORMATIONAL SUBMITTALS

A. Field quality-control reports.

1.6 QUALITY ASSURANCE

A. Electrical Components, Devices, and Accessories: Listed and labeled as defined in NFPA 70, by a qualified testing agency, and marked for intended location and application.

1.7 DELIVERY, STORAGE, AND HANDLING

A. Receive, store, and handle modular meter center according to NECA 400.

1.8 COORDINATION

A. Electrical Service Connections: Coordinate with utility companies and components they furnish as follows:

1. Comply with requirements of utilities providing electrical power services.
2. Coordinate installation and connection of utilities and services, including provision for electricity-metering components.
3. Pay all utility charges.

PART 2 - PRODUCTS

2.1 EQUIPMENT FOR ELECTRICITY METERING BY UTILITY COMPANY

A. Meter will be furnished by utility company.

B. Meter Socket: Comply with requirements of electrical-power utility company.

C. Meter Socket: Steady-state and short-circuit current ratings shall meet indicated circuit ratings.

PART 3 - EXECUTION

3.1 INSTALLATION

A. Comply with equipment installation requirements in NECA 1.

B. Install meters furnished by utility company. Install raceways and equipment according to utility company's written requirements. Provide empty conduits for metering leads and extend grounding connections if required by utility company.

3.2 FIELD QUALITY CONTROL

A. Perform tests and inspections.

B. Tests and Inspections:

1. Connect a load of known kilowatt rating, 1.5 kW minimum, to a circuit supplied by metered feeder.
2. Turn off circuits supplied by metered feeder and secure them in off condition.
3. Run test load continuously for eight hours minimum, or longer, to obtain a measurable meter indication. Use test-load placement and setting that ensures continuous, safe operation.
4. Check and record meter reading at end of test period and compare with actual electricity used, based on test-load rating, duration of test, and sample measurements of supply voltage at test-load connection. Record test results.
5. Perform grounding and bonding per utility company requirements.

C. Electricity metering will be considered defective if it does not pass tests and inspections.

D. Prepare test and inspection reports.

END OF SECTION 262713

PART 1 - GENERAL

1.1 SUMMARY

A. This Section includes the following:

1. Receptacles, receptacles with integral GFCI, and associated device plates.
2. Switches.

1.2 SUBMITTALS

A. Product Data: For each type of product indicated.

B. Shop Drawings: List of legends and description of materials and process used for pre-marking wall plates.

C. Samples: One for each type of device and wall plate specified, in each color specified.

D. Operation and Maintenance Data: For wiring devices to include in all manufacturers' packing label warnings and instruction manuals that include labeling conditions.

1.3 QUALITY ASSURANCE

A. Electrical Components, Devices, and Accessories: Listed and labeled as defined in NFPA 70, Article 100, by a testing agency acceptable to authorities having jurisdiction, and marked for intended use.

B. Comply with NFPA 70.

PART 2 - PRODUCTS

2.1 MANUFACTURERS

A. Manufacturers' Names: Shortened versions (shown in parentheses) of the following manufacturers' names are used in other Part 2 articles:

1. Cooper Wiring Devices; a division of Cooper Industries, Inc. (Cooper).
2. Hubbell Incorporated; Wiring Device-Kellems (Hubbell).
3. Leviton Mfg. Company Inc. (Leviton).
4. Pass & Seymour/Legrand; Wiring Devices & Accessories (Pass & Seymour).

2.2 STRAIGHT BLADE RECEPTACLES

A. Convenience Receptacles, 125 V, 20 A: Comply with NEMA WD 1, NEMA WD 6 configuration 5-20R, and UL 498.

1. Available Products: Subject to compliance with requirements, products that may be incorporated into the Work include, but are not limited to, the following:

a. Cooper; 5351 (single), 5352 (duplex).
b. Hubbell; HBL5351 (single), CR5352 (duplex).
c. Leviton; 5891 (single), 5352 (duplex).
d. Pass & Seymour; 5381 (single), 5352 (duplex).

2.3 GFCI RECEPTACLES

A. General Description: Straight blade, feed-through type. Comply with NEMA WD 1, NEMA WD 6, UL 498, and UL 943, Class A, and include indicator light that is lighted when device is tripped.

B. Duplex GFCI Convenience Receptacles, 125 V, 20 A:

1. Available Products: Subject to compliance with requirements, products that may be incorporated into the Work include, but are not limited to, the following:
2. Products: Subject to compliance with requirements, provide one of the following:

a. Cooper; GF20.
b. Pass & Seymour; 2084.

2.4 SWITCHES

A. Comply with NEMA WD 1 and UL 20.

B. Switches, 120/277 V, 20 A:

1. Available Products: Subject to compliance with requirements, products that may be incorporated into the Work include, but are not limited to, the following:

a. Cooper; 2221 (single pole), 2222 (two pole), 2223 (three way), 2224 (four way).
b. Hubbell; CS1221 (single pole), CS1222 (two pole), CS1223 (three way), CS1224 (four way).
c. Leviton; 1221-2 (single pole), 1222-2 (two pole), 1223-2 (three way), 1224-2 (four way).
d. Pass & Seymour; 20AC1 (single pole), 20AC2 (two pole), 20AC3 (three way), 20AC4 (four way).

C. Pilot Light Switches, 20 A (If Required):

1. Available Products: Subject to compliance with requirements, products that may be incorporated into the Work include, but are not limited to, the following:

a. Cooper; 2221PL for 120 V and 277 V.
b. Hubbell; HPL1221PL for 120 V and 277 V.
c. Leviton; 1221-PLR for 120 V, 1221-7PLR for 277 V.
d. Pass & Seymour; PS20AC1-PLR for 120 V.

2. Description: Single pole, with neon-lighted handle, illuminated when switch is "ON."

2.5 WALL PLATES

A. Single and combination types to match corresponding wiring devices.

1. Plate-Securing Screws: Metal with head color to match plate finish.
2. Material for Unfinished Spaces: Galvanized steel.
3. Material for Damp Locations: Cast aluminum with spring-loaded lift cover, and listed and labeled for use in "wet locations."

B. Wet-Location, Weatherproof Cover Plates: NEMA 250, complying with type 3R weather-resistant , die-cast aluminum with lockable cover.

2.6 FINISHES

A. Color: Wiring device catalog numbers in Section Text do not designate device color.

1. Wiring Devices Connected to Normal Power System: Brown, unless otherwise indicated or required by NFPA 70 or device listing.
2. Wiring Devices Connected to Emergency Power System: Red.

PART 3 - EXECUTION

3.1 INSTALLATION

A. Comply with NECA 1, including the mounting heights listed in that standard, unless otherwise noted.

B. Coordination with Other Trades:

1. Take steps to insure that devices and their boxes are protected. Do not place wall finish materials over device boxes.
2. Keep outlet boxes free of mortar, cement, concrete, dust, paint, and other material that may contaminate the raceway system, conductors, and cables.

C. Conductors:

1. Do not strip insulation from conductors until just before they are spliced or terminated on devices.
2. Strip insulation evenly around the conductor using tools designed for the purpose. Avoid scoring or nicking of solid wire or cutting strands from stranded wire.
3. The length of free conductors at outlets for devices shall meet provisions of NFPA 70, Article 300, without pigtails.
4. Existing Conductors:

a. Cut back and pigtail, or replace all damaged conductors.
b. Straighten conductors that remain and remove corrosion and foreign matter.
c. Pig-tailing existing conductors is permitted provided the outlet box is large enough.

D. Device Installation:

1. Replace all devices that have been in temporary use during construction or that show signs that they were installed before building finishing operations were complete.
2. Keep each wiring device in its package or otherwise protected until it is time to connect conductors.
3. Do not remove surface protection, such as plastic film and smudge covers, until the last possible moment.
4. Connect devices to branch circuits using pigtails that are not less than 6 inches in length.
5. Use side wiring with binding-head screw terminals. Wrap solid conductor tightly clockwise, 2/3 to 3/4 of the way around terminal screw.
6. Use a torque screwdriver when a torque is recommended or required by the manufacturer.
7. When conductors larger than No. 12 AWG are installed on 15- or 20-A circuits, splice No. 12 AWG pigtails for device connections.
8. Tighten unused terminal screws on the device.
9. When mounting into metal boxes, remove the fiber or plastic washers used to hold device mounting screws in yokes, allowing metal-to-metal contact.

E. Receptacle Orientation:

1. Install ground pin of vertically mounted receptacles down, and on horizontally mounted receptacles to the right.

F. Device Plates: Do not use oversized or extra-deep plates. Repair wall finishes and remount outlet boxes when standard device plates do not fit flush or do not cover rough wall opening.

3.2 IDENTIFICATION

A. Comply with Division 26 Section "Identification for Electrical Systems."

1. Receptacles: Identify panelboard and circuit number from which served. Use hot, stamped or engraved machine printing with white-filled lettering on face of plate, and durable wire markers or tags inside outlet boxes.

3.3 FIELD QUALITY CONTROL

A. Perform tests and inspections and prepare test reports.

1. Test Instruments: Use instruments that comply with UL 1436.
2. Test Instrument for Convenience Receptacles: Digital wiring analyzer with digital readout or illuminated LED indicators of measurement.

B. Tests for Convenience Receptacles:

1. Line Voltage: Acceptable range is 105 to 132 V.
2. Percent Voltage Drop under 15-A Load: A value of 6 percent or higher is not acceptable.
3. Ground Impedance: Values of up to 2 ohms are acceptable.
4. GFCI Trip: Test for tripping values specified in UL 1436 and UL 943.
5. Using the test plug, verify that the device and its outlet box are securely mounted.

6. The tests shall be diagnostic, indicating damaged conductors, high resistance at the circuit breaker, poor connections, inadequate fault current path, defective devices, or similar problems. Correct circuit conditions, remove malfunctioning units and replace with new, and retest as specified above.

END OF SECTION 262726

SECTION 262813 - FUSES

PART 1 - GENERAL

1.1 RELATED DOCUMENTS

A. Drawings and general provisions of the Contract, including General and Supplementary Conditions and Division 01 Specification Sections, apply to this Section.

1.2 SUMMARY

A. Section Includes:

1. Cartridge fuses rated 600-V ac and less for use in control circuits, enclosed switches, switchboards and enclosed controllers.
2. Spare-fuse cabinets.

1.3 SUBMITTALS

A. Product Data: For each type of product indicated. Include construction details, material, dimensions, descriptions of individual components, and finishes for spare-fuse cabinets. Include the following for each fuse type indicated:

1. Ambient Temperature Adjustment Information: If ratings of fuses have been adjusted to accommodate ambient temperatures, provide list of fuses with adjusted ratings.

    a. For each fuse having adjusted ratings, include location of fuse, original fuse rating, local ambient temperature, and adjusted fuse rating.
    b. Provide manufacturer's technical data on which ambient temperature adjustment calculations are based.

2. Dimensions and manufacturer's technical data on features, performance, electrical characteristics, and ratings.
3. Current-limitation curves for fuses with current-limiting characteristics.
4. Time-current coordination curves (average melt) and current-limitation curves (instantaneous peak let-through current) for each type and rating of fuse. Submit on translucent log-log graph paper.
5. Coordination charts and tables and related data.
6. Fuse sizes for elevator feeders and elevator disconnect switches.

B. Operation and Maintenance Data: For fuses to include in emergency, operation, and maintenance manuals. In addition to items specified in Division 01 Section "Operation and Maintenance Data," include the following:

1. Ambient temperature adjustment information.
2. Current-limitation curves for fuses with current-limiting characteristics.

3. Time-current coordination curves (average melt) and current-limitation curves (instantaneous peak let-through current) for each type and rating of fuse. Submit on translucent log-log graph paper.
4. Coordination charts and tables and related data.

1.4 QUALITY ASSURANCE

A. Source Limitations: Obtain fuses, for use within a specific product or circuit, from single source from single manufacturer.

B. Electrical Components, Devices, and Accessories: Listed and labeled as defined in NFPA 70, by a qualified testing agency, and marked for intended location and application.

C. Comply with NEMA FU 1 for cartridge fuses.

D. Comply with NFPA 70.

E. Comply with UL 248-11 for plug fuses.

1.5 PROJECT CONDITIONS

A. Where ambient temperature to which fuses are directly exposed is less than 40 deg F (5 deg C) or more than 100 deg F (38 deg C), apply manufacturer's ambient temperature adjustment factors to fuse ratings.

1.6 COORDINATION

A. Coordinate fuse ratings with utilization equipment nameplate limitations of maximum fuse size and with system short-circuit current levels.

1.7 EXTRA MATERIALS

A. Furnish extra materials that match products installed and that are packaged with protective covering for storage and identified with labels describing contents.

1. Fuses: Equal to 10 percent of quantity installed for each size and type, but no fewer than three of each size and type.

PART 2 - PRODUCTS

2.1 MANUFACTURERS

A. Manufacturers: Subject to compliance with requirements, provide products by one of the following:

1. Cooper Bussmann, Inc.
2. Edison Fuse, Inc.
3. Ferraz Shawmut, Inc.
4. Littelfuse, Inc.

2.2 CARTRIDGE FUSES

A. Characteristics: NEMA FU 1, nonrenewable cartridge fuses with voltage ratings consistent with circuit voltages.

2.3 SPARE-FUSE CABINET

A. Characteristics: Wall-mounted steel unit with full-length, recessed piano-hinged door and key-coded cam lock and pull.

1. Size: Adequate for storage of spare fuses specified with 15 percent spare capacity minimum.
2. Finish: Gray, baked enamel.
3. Identification: "SPARE FUSES" in 1-1/2-inch- (38-mm-) high letters on exterior of door.
4. Fuse Pullers: For each size of fuse, where applicable and available, from fuse manufacturer.

PART 3 - EXECUTION

3.1 EXAMINATION

A. Examine fuses before installation. Reject fuses that are moisture damaged or physically damaged.

B. Examine holders to receive fuses for compliance with installation tolerances and other conditions affecting performance, such as rejection features.

C. Examine utilization equipment nameplates and installation instructions. Install fuses of sizes and with characteristics appropriate for each piece of equipment.

D. Evaluate ambient temperatures to determine if fuse rating adjustment factors must be applied to fuse ratings.

E. Proceed with installation only after unsatisfactory conditions have been corrected.

3.2 FUSE APPLICATIONS

A. Cartridge Fuses:

1. Service Entrance: Class L, time delay

2. Feeders: Class RK1, time delay
3. Motor Branch Circuits: Class RK1, time delay.
4. Other Branch Circuits: Class J, time delay.
5. Control Circuits: Class CC, time delay.

3.3 INSTALLATION

A. Install fuses in fusible devices. Arrange fuses so rating information is readable without removing fuse.

B. Install spare-fuse cabinet(s).

3.4 IDENTIFICATION

A. Install labels complying with requirements for identification specified in Division 26 Section "Identification for Electrical Systems" and indicating fuse replacement information on inside door of each fused switch and adjacent to each fuse block, socket, and holder.

END OF SECTION 262813

PART 1 - GENERAL

1.1 RELATED DOCUMENTS

A. Drawings and general provisions of the Contract, including General and Supplementary Conditions and other Division 01 Specification Sections, apply to this Section.

1.2 SUMMARY

A. Section Includes:

1. Fusible switches.
2. Non-fusible switches.
3. Molded-case circuit breakers (MCCBs).
4. Enclosures.

1.3 DEFINITIONS

A. NC: Normally closed.

B. NO: Normally open.

C. SPDT: Single pole, double throw.

1.4 SUBMITTALS

A. Product Data: For each type of enclosed switch, circuit breaker, accessory, and component indicated. Include dimensioned elevations, sections, weights, and manufacturers' technical data on features, performance, electrical characteristics, ratings, accessories, and finishes.

1. Enclosure types and details for types other than NEMA 250, Type 1.
2. Current and voltage ratings.
3. Short-circuit current ratings (interrupting and withstand, as appropriate).
4. Include evidence of NRTL listing for series rating of installed devices.
5. Detail features, characteristics, ratings, and factory settings of individual overcurrent protective devices, accessories, and auxiliary components.
6. Include time-current coordination curves (average melt) for each type and rating of overcurrent protective device; include selectable ranges for each type of overcurrent protective device. Submit on translucent log-log graph paper.

B. Shop Drawings: For enclosed switches and circuit breakers. Include plans, elevations, sections, details, and attachments to other work.

1. Wiring Diagrams: For power, signal, and control wiring.

C. Field quality-control reports.

1. Test procedures used.
2. Test results that comply with requirements.
3. Results of failed tests and corrective action taken to achieve test results that comply with requirements.

D. Manufacturer's field service report.

E. Operation and Maintenance Data: For enclosed switches and circuit breakers to include in emergency, operation, and maintenance manuals. In addition to items specified in Division 01 Section "Operation and Maintenance Data," include the following:

1. Manufacturer's written instructions for testing and adjusting enclosed switches and circuit breakers.
2. Time-current coordination curves (average melt) for each type and rating of overcurrent protective device; include selectable ranges for each type of overcurrent protective device. Submit on translucent log-log graph paper.

1.5 QUALITY ASSURANCE

A. Source Limitations: Obtain enclosed switches and circuit breakers, overcurrent protective devices, components, and accessories, within same product category, from single source from single manufacturer.

B. Product Selection for Restricted Space: Drawings indicate maximum dimensions for enclosed switches and circuit breakers, including clearances between enclosures, and adjacent surfaces and other items. Comply with indicated maximum dimensions.

C. Electrical Components, Devices, and Accessories: Listed and labeled as defined in NFPA 70, by a qualified testing agency, and marked for intended location and application.

D. Comply with NFPA 70.

1.6 PROJECT CONDITIONS

A. Environmental Limitations: Rate equipment for continuous operation under the following conditions unless otherwise indicated:

1. Ambient Temperature: Not less than minus 22 deg F (minus 30 deg C) and not exceeding 104 deg F (40 deg C).
2. Altitude: Not exceeding 6600 feet (2010 m).

1.7 COORDINATION

A. Coordinate layout and installation of switches, circuit breakers, and components with equipment served and adjacent surfaces. Maintain required workspace clearances and required clearances for equipment access doors and panels.

1.8 EXTRA MATERIALS

A. Furnish extra materials that match products installed and that are packaged with protective covering for storage and identified with labels describing contents.

1. Fuses: Equal to 10 percent of quantity installed for each size and type, but no fewer than three of each size and type.
2. Fuse Pullers: Two for each size and type.

PART 2 - PRODUCTS

2.1 FUSIBLE SWITCHES

A. Manufacturers: Subject to compliance with requirements, provide products by one of the following:

1. Eaton Electrical Inc.; Cutler-Hammer Business Unit.
2. General Electric Company; GE Consumer & Industrial - Electrical Distribution.
3. Siemens Energy & Automation, Inc.
4. Square D; a brand of Schneider Electric.

B. Type HD, Heavy Duty, Single Throw, 600-V ac, 1200 A and Smaller: UL 98 and NEMA KS 1, horsepower rated, with clips or bolt pads to accommodate specified fuses, lockable handle with capability to accept three padlocks, and interlocked with cover in closed position.

C. Accessories:

1. Equipment Ground Kit: Internally mounted and labeled for copper and aluminum ground conductors.
2. Neutral Kit: Internally mounted; insulated, capable of being grounded and bonded; labeled for copper and aluminum neutral conductors.
3. Class R Fuse Kit: Provides rejection of other fuse types when Class R fuses are specified.
4. Auxiliary Contact Kit: Two NO/NC (Form "C") auxiliary contact(s), arranged to activate before switch blades open.
5. Lugs: Mechanical type, suitable for number, size, and conductor material.

2.2 NONFUSIBLE SWITCHES

A. Manufacturers: Subject to compliance with requirements, provide products by one of the following:

1. Eaton Electrical Inc.; Cutler-Hammer Business Unit.
2. General Electric Company; GE Consumer & Industrial - Electrical Distribution.
3. Siemens Energy & Automation, Inc.
4. Square D; a brand of Schneider Electric.

B. Type HD, Heavy Duty, Single Throw, [240] 600-V ac, 1200 A and Smaller: UL 98 and NEMA KS 1, horsepower rated, lockable handle with capability to accept three padlocks, and interlocked with cover in closed position.

C. Accessories:

1. Equipment Ground Kit: Internally mounted and labeled for copper and aluminum ground conductors.
2. Neutral Kit: Internally mounted; insulated, capable of being grounded and bonded; labeled for copper and aluminum neutral conductors.
3. Auxiliary Contact Kit: Two NO/NC (Form "C") auxiliary contact(s), arranged to activate before switch blades open.
4. Hookstick Handle: Allows use of a hookstick to operate the handle.
5. Lugs: Mechanical type, suitable for number, size, and conductor material.
6. Accessory Control Power Voltage: Remote mounted and powered; 24-V ac.

2.3 MOLDED-CASE CIRCUIT BREAKERS

A. Manufacturers: Subject to compliance with requirements, available manufacturers offering products that may be incorporated into the Work include, but are not limited to, the following:

1. Eaton Electrical Inc.; Cutler-Hammer Business Unit.
2. General Electric Company; GE Consumer & Industrial - Electrical Distribution.
3. Siemens Energy & Automation, Inc.
4. Square D; a brand of Schneider Electric.

B. General Requirements: Comply with UL 489, NEMA AB 1, and NEMA AB 3, with interrupting capacity to comply with available fault currents.

C. Thermal-Magnetic Circuit Breakers: Inverse time-current element for low-level overloads and instantaneous magnetic trip element for short circuits. Adjustable magnetic trip setting for circuit-breaker frame sizes 250 A and larger.

D. Ground-Fault, Circuit-Interrupter (GFCI) Circuit Breakers: Single- and two-pole configurations with Class A ground-fault protection (6-mA trip).

E. Features and Accessories:

1. Standard frame sizes, trip ratings, and number of poles.
2. Lugs: Mechanical type, suitable for number, size, trip ratings, and conductor material.
3. Application Listing: Appropriate for application; Type SWD for switching fluorescent lighting loads; Type HID for feeding fluorescent and high-intensity discharge lighting circuits.
4. Ground-Fault Protection: Comply with UL 1053; remote-mounted and powered type with mechanical ground-fault indicator; relay with adjustable pickup and time-delay settings, push-to-test feature, internal memory, and shunt trip unit; and three-phase, zero-sequence current transformer/sensor.
5. Shunt Trip: Trip coil energized from separate circuit, with coil-clearing contact.
6. Undervoltage Trip: Set to operate at 35 to 75 percent of rated voltage without intentional time delay.
7. Auxiliary Contacts: One SPDT switch with "a" and "b" contacts; "a" contacts mimic circuit-breaker contacts, "b" contacts operate in reverse of circuit-breaker contacts.
8. Alarm Switch: One NO contact that operates only when circuit breaker has tripped.
9. Key Interlock Kit: Externally mounted to prohibit circuit-breaker operation; key shall be removable only when circuit breaker is in off position.

10. Zone-Selective Interlocking: Integral with electronic trip unit; for interlocking ground-fault protection function.
11. Electrical Operator: Provide remote control for on, off, and reset operations.
12. Accessory Control Power Voltage: Remote mounted and powered; 120-V ac.

2.4 ENCLOSURES

A. Enclosed Switches and Circuit Breakers: NEMA AB 1, NEMA KS 1, NEMA 250, and UL 50, to comply with environmental conditions at installed location.

1. Outdoor Locations: NEMA 250, Type 3R.
2. Other Wet or Damp, Indoor Locations: NEMA 250, Type 4.

PART 3 - EXECUTION

3.1 EXAMINATION

A. Examine elements and surfaces to receive enclosed switches and circuit breakers for compliance with installation tolerances and other conditions affecting performance of the Work.

B. Proceed with installation only after unsatisfactory conditions have been corrected.

3.2 INSTALLATION

A. Install individual wall-mounted switches and circuit breakers with tops at uniform height unless otherwise indicated.

B. Temporary Lifting Provisions: Remove temporary lifting eyes, channels, and brackets and temporary blocking of moving parts from enclosures and components.

C. Install fuses in fusible devices.

D. Comply with NECA 1.

3.3 IDENTIFICATION

A. Comply with requirements in Division 26 Section "Identification for Electrical Systems."

1. Identify field-installed conductors, interconnecting wiring, and components; provide warning signs.
2. Label each enclosure with engraved metal or laminated-plastic nameplate.

3.4 FIELD QUALITY CONTROL

A. Perform tests and inspections.

1. Manufacturer's Field Service: Engage a factory-authorized service representative to inspect components, assemblies, and equipment installations, including connections, and to assist in testing.

B. Acceptance Testing Preparation:

1. Test insulation resistance for each enclosed switch and circuit breaker, component, connecting supply, feeder, and control circuit.
2. Test continuity of each circuit.

C. Tests and Inspections:

1. Perform each visual and mechanical inspection and electrical test stated in NETA Acceptance Testing Specification. Certify compliance with test parameters.
2. Correct malfunctioning units on-site, where possible, and retest to demonstrate compliance; otherwise, replace with new units and retest.
3. Perform the following infrared scan tests and inspections and prepare reports:

   a. Initial Infrared Scanning: After Substantial Completion, but not more than 60 days after Final Acceptance, perform an infrared scan of each enclosed switch and circuit breaker. Remove front panels so joints and connections are accessible to portable scanner.
   b. Follow-up Infrared Scanning: Perform an additional follow-up infrared scan of each enclosed switch and circuit breaker 11 months after date of Substantial Completion.
   c. Instruments and Equipment: Use an infrared scanning device designed to measure temperature or to detect significant deviations from normal values. Provide calibration record for device.

4. Test and adjust controls, remote monitoring, and safeties. Replace damaged and malfunctioning controls and equipment.

D. Enclosed switches and circuit breakers will be considered defective if they do not pass tests and inspections.

E. Prepare test and inspection reports, including a certified report that identifies enclosed switches and circuit breakers and that describes scanning results. Include notation of deficiencies detected, remedial action taken, and observations after remedial action.

3.5 ADJUSTING

A. Adjust moving parts and operable components to function smoothly, and lubricate as recommended by manufacturer.

B. Set field-adjustable circuit-breaker trip ranges as specified in Division 26 Section "Overcurrent Protective Device".

C. END OF SECTION 26 28 16

PART 1 - GENERAL

1.1 SUMMARY

A. Section Includes:

1. Three-phase, on-line, double-conversion, static-type, UPS units with the following features:

a. Rectifier-charger.
b. Inverter.
c. Static bypass transfer switch.
d. Battery and battery disconnect device.

1.2 SUBMITTALS

A. Product Data: For each type of product indicated. Include data on features, components, ratings, and performance.

B. Shop Drawings: Detail equipment assemblies and indicate dimensions, weights, components, and location and identification of each field connection. Show access, workspace, and clearance requirements; details of control panels; and battery arrangement. Include wiring diagrams.

C. Factory Test Reports: Comply with specified requirements.

D. Field quality-control reports.

E. Operation and Maintenance Data:

F. Warranties.

1.3 QUALITY ASSURANCE

A. Electrical Components, Devices, and Accessories: Listed and labeled as defined in NFPA 70, by a qualified testing agency, and marked for intended location and application.

B. UL Compliance: Listed and labeled under UL 1778 by an NRTL.

C. NFPA Compliance: Mark UPS components as suitable for installation in computer rooms according to NFPA 75.

1.4 WARRANTY

A. Special UPS Warranties: Specified form in which manufacturer and Installer agree to repair or replace components that fail in materials or workmanship within special warranty period.

1. Special Warranty Period: Two years from date of Substantial Completion.

PART 2 - PRODUCTS

2.1 OPERATIONAL REQUIREMENTS

A. Automatic operation includes the following:

1. Normal Conditions: Load is supplied with power flowing from the normal power input terminals, through the rectifier-charger and inverter, with the battery connected in parallel with the rectifier-charger output.
2. Abnormal Supply Conditions: If normal supply deviates from specified and adjustable voltage, voltage waveform, or frequency limits, the battery supplies energy to maintain constant, regulated inverter power output to the load without switching or disturbance.
3. If normal power fails, energy supplied by the battery through the inverter continues supply-regulated power to the load without switching or disturbance.
4. When power is restored at the normal supply terminals of the system, controls automatically synchronize the inverter with the external source before transferring the load. The rectifier-charger then supplies power to the load through the inverter and simultaneously recharges the battery.
5. If the battery becomes discharged and normal supply is available, the rectifier-charger charges the battery. On reaching full charge, the rectifier-charger automatically shifts to float-charge mode.
6. If any element of the UPS system fails and power is available at the normal supply terminals of the system, the static bypass transfer switch switches the load to the normal ac supply circuit without disturbance or interruption.
7. If a fault occurs in the system supplied by the UPS, and current flows in excess of the overload rating of the UPS system, the static bypass transfer switch operates to bypass the fault current to the normal ac supply circuit for fault clearing.
8. When the fault has cleared, the static bypass transfer switch returns the load to the UPS system.
9. If the battery is disconnected, the UPS continues to supply power to the load with no degradation of its regulation of voltage and frequency of the output bus.

B. Manual operation includes the following:

1. Turning the inverter off causes the static bypass transfer switch to transfer the load directly to the normal ac supply circuit without disturbance or interruption.
2. Turning the inverter on causes the static bypass transfer switch to transfer the load to the inverter.

C. Environmental Conditions: The UPS shall be capable of operating continuously in the following environmental conditions without mechanical or electrical damage or degradation of operating capability, except battery performance.

1. Ambient Temperature for -30 to 136 deg F.
2. Relative Humidity: 0 to 95 percent, non-condensing.
3. Altitude: Sea level to 4000 feet.

2.2 PERFORMANCE REQUIREMENTS

A. The UPS shall perform as specified in this article while supplying rated full-load current, composed of any combination of linear and nonlinear load, up to 100 percent nonlinear load

with a load crest factor of 3.0, under the following conditions or combinations of the following conditions:

1. Inverter is switched to battery source.
2. Steady-state ac input voltage deviates up to plus or minus 10 percent from nominal voltage.
3. Steady-state input frequency deviates up to plus or minus 5 percent from nominal frequency.
4. THD of input voltage is 10 percent or more with a minimum crest factor of 3.0, and the largest single harmonic component is a minimum of 5 percent of the fundamental value.

B. Minimum Duration of Supply: If battery is sole energy source supplying rated full UPS load current at 80 percent power factor, duration of supply is 90 minutes.

C. Input Voltage Tolerance: System steady-state and transient output performance remains within specified tolerances when steady-state ac input voltage varies plus 2, minus 35 percent from nominal voltage.

D. Output Frequency: 60 Hz, plus or minus 0.5 percent over the full range of input voltage, load, and battery voltage.

E. Limitation of harmonic distortion of input current to the UPS shall be as follows:

1. Description: Either a tuned harmonic filter or an arrangement of rectifier-charger circuits shall limit THD to 10 percent, maximum, at rated full UPS load current, for power sources with X/R ratio between 2 and 30.

F. Maximum Harmonic Content of Output-Voltage Waveform: 5 percent rms total and 3 percent rms for any single harmonic, for rated full load with THD up to 50 percent, with a load crest factor of 3.0.

G. Input Power Factor: A minimum of 0.70 lagging when supply voltage and current are at nominal rated values and the UPS is supplying rated full-load current.

2.3 UPS SYSTEMS

A. Basis-of-Design Product: Subject to compliance with requirements, provide product indicated on Drawings:

1. Crucial power products.

B. Electronic Equipment: Solid-state devices using hermetically sealed, semiconductor elements. Devices include rectifier-charger, inverter, static bypass transfer switch, and system controls.

C. Enclosures: Comply with NEMA 250, Type3R, unless otherwise indicated.

D. Seismic-Restraint Design: UPS assemblies, subassemblies, and components (and fastenings and supports, mounting, and anchorage devices for them) shall be designed and fabricated to withstand static and seismic forces.

2.4 RECTIFIER-CHARGER

A. Capacity: Adequate to supply the inverter during rated full output load conditions and simultaneously recharge the battery from fully discharged condition to 95 percent of full charge within 10 times the rated discharge time for duration of supply under battery power at full load.

B. Output Ripple: Limited by output filtration to less than 0.5 percent of rated current, peak to peak.

C. Control Circuits: Immune to frequency variations within rated frequency ranges of normal and emergency power sources.

D. Battery Float-Charging Conditions: Comply with battery manufacturer's written instructions for battery terminal voltage and charging current required for maximum battery life.

2.5 INVERTER

A. Description: Pulse-width modulated, with sinusoidal output.

2.6 STATIC BYPASS TRANSFER SWITCH

A. Description: Solid-state switching device providing uninterrupted transfer. A contactor or electrically operated circuit breaker automatically provides electrical isolation for the switch.

B. Switch Rating: Continuous duty at the rated full UPS load current, minimum.

2.7 BATTERY

A. Description: Valve-regulated, recombinant, lead-calcium units, factory assembled in an isolated compartment of UPS cabinet, complete with battery disconnect switch.

B. Manufacturers: Subject to compliance with requirements, provide products by one of the following available manufacturers offering products that may be incorporated into the Work include, but are not limited to, the following:

1. C&D Technologies, Inc.; Standby Power Division.
2. Eaton Corporation; Powerware Division.
3. EnerSys.
4. Panasonic Corporation of North America; Panasonic Industrial Company.

C. Seismic-Restraint Design: Battery racks, cabinets, assemblies, subassemblies, and components (and fastenings and supports, mounting, and anchorage devices for them) shall be designed and fabricated to withstand static and seismic forces.

2.8 CONTROLS AND INDICATIONS

A. Description: Group displays, indications, and basic system controls on a common control panel on front of UPS enclosure.

B. Minimum displays, indicating devices, and controls include those in lists below. Provide sensors, transducers, terminals, relays, and wiring required to support listed items. Alarms include audible signals and visual displays.

C. Indications: Labeled LED.

1. Basic status condition indications shall include the following:

a. Normal operation.
b. Load-on bypass.
c. Load-on battery.
d. Inverter off.

2. Controls shall include the following:

a. Inverter on-off.
b. UPS start.
c. Battery test.
d. Alarm silence/reset.
e. Output-voltage adjustment.

D. Dry-form "C" contacts shall be available for remote indication of the following conditions:

1. UPS on battery.
2. UPS on-line.
3. UPS load-on bypass.
4. UPS in alarm condition.
5. UPS off (maintenance bypass closed).

E. Emergency Power Off Switch: Capable of local operation and operation by means of activation by external dry contacts.

2.9 SOURCE QUALITY CONTROL

A. Factory test complete UPS system before shipment. Use simulated battery testing. Include the following:

1. Test and demonstration of all functions, controls, indicators, sensors, and protective devices.
2. Full-load test.
3. Transient-load response test.
4. Overload test.
5. Power failure test.

B. Report test results.

PART 3 - EXECUTION

3.1 INSTALLATION

A. Equipment Mounting: Install UPS on concrete base. Comply with requirements for concrete base specified in Division 03 Section "Cast-in-Place Concrete."

1. Install dowel rods to connect concrete base to concrete floor. Unless otherwise indicated, install dowel rods on 18-inch centers around the full perimeter of concrete base.

2. For supported equipment, install epoxy-coated anchor bolts that extend through concrete base and anchor into structural concrete floor.
3. Place and secure anchorage devices. Use setting drawings, templates, diagrams, instructions, and directions furnished with items to be embedded.
4. Install anchor bolts to elevations required for proper attachment to supported equipment.

B. Maintain minimum clearances and workspace at equipment according to manufacturer's written instructions and NFPA 70.

C. Connections: Interconnect system components. Make connections to supply and load circuits according to manufacturer's wiring diagrams unless otherwise indicated.

D. Identify components and wiring according to Division 26 Section "Identification for Electrical Systems."

E. Equalize charging of battery cells according to manufacturer's written instructions. Record individual-cell voltages.

3.2 FIELD QUALITY CONTROL

A. Perform tests and inspections.

1. Manufacturer's Field Service: Engage a factory-authorized service representative to inspect components, assemblies, and equipment installations, including connections, and to assist in testing.

B. Tests and Inspections:

1. Comply with manufacturer's written instructions.
2. Inspect interiors of enclosures, including the following:

a. Integrity of mechanical and electrical connections.
b. Component type and labeling verification.
c. Ratings of installed components.

3. Inspect batteries and chargers according to requirements in NETA Acceptance Testing Specifications.
4. Test manual and automatic operational features and system protective and alarm functions.
5. Test communication of status and alarms to remote monitoring equipment.

C. The UPS system will be considered defective if it does not pass tests and inspections.

D. Record of Tests and Inspections: Maintain and submit documentation of tests and inspections, including references to manufacturers' written instructions and other test and inspection criteria. Include results of tests, inspections, and retests.

E. Prepare test and inspection reports.

3.3 DEMONSTRATION

A. Engage a factory-authorized service representative to train Owner's maintenance personnel to adjust, operate, and maintain the UPS.

END OF SECTION 263353

SECTION 263353 - CENTRAL BATTERY EQUIPMENT (INVERTERS)

PART 1 - GENERAL

1.1 RELATED DOCUMENTS

A. Drawings and general provisions of the Contract, including General and Supplementary Conditions and Division 1 Specification Sections, apply to this Section.

1.2 SUMMARY

A. This Section includes central battery inverters with the following features:

1. Output distribution section.
2. External maintenance bypass/isolation switch.
3. Emergency-only circuits.
4. Remote monitoring provisions.

1.3 DEFINITIONS

A. LCD: Liquid-crystal display.

B. LED: Light-emitting diode.

1.4 SUBMITTALS

A. Product Data: For the following:

1. Electrical ratings, including the following:

a. Capacity to provide power during failure of normal ac power.
b. Inverter voltage regulation and total harmonic distortion of output current.
c. Rectifier data.
d. Transfer time of transfer switch.
e. Data for specified optional features.

2. Transfer switch.
3. Inverter.
4. Battery charger.
5. Batteries.
6. Battery monitoring.

B. Shop Drawings: Detail equipment assemblies and indicate dimensions, weights, components, and location and identification of each field connection. Show access, workspace, and clearance requirements; details of control panels; and battery arrangement.

1. Wiring Diagrams: Detail internal and interconnecting wiring; and power, signal, and control wiring.

2. Elevation and details of control and indication displays.
3. Output distribution section.

C. Manufacturer Seismic Qualification Certification: Submit certification that central battery inverter equipment will withstand seismic forces defined in Division 16 Section "Seismic Controls for Electrical Work." Include the following:

1. Basis for Certification: Indicate whether withstand certification is based on actual test of assembled components or on calculation.

a. The term "withstand" means "the unit will remain in place without separation of any parts from the device when subjected to the seismic forces specified."
b. The term "withstand" means "the unit will remain in place without separation of any parts from the device when subjected to the seismic forces specified and the unit will be fully operational after the seismic event."

2. Dimensioned Outline Drawings of Equipment Unit: Identify center of gravity and locate and describe mounting and anchorage provisions.
3. Detailed description of equipment anchorage devices on which the certification is based and their installation requirements.

D. Qualification Data: For testing agency.

E. Source quality-control test reports.

F. Field quality-control test reports.

G. Operation and Maintenance Data: For central battery inverter equipment to include in emergency, operation, and maintenance manuals specified in Division 1.

H. Warranties: Special warranties specified in this Section.

1.5 QUALITY ASSURANCE

A. Testing Agency Qualifications: An independent testing agency, with the experience and capability to conduct the testing indicated, that is a member company of the International Electrical Testing Association or is a nationally recognized testing laboratory (NRTL) as defined by OSHA in 29 CFR 1910.7, and that is acceptable to authorities having jurisdiction.

B. Product Options: Drawings indicate size, profiles, and dimensional requirements of central battery inverter system. Refer to Division 1 Section "Product Requirements."

C. Electrical Components, Devices, and Accessories: Listed and labeled as defined in NFPA 70, Article 100, by a testing agency acceptable to authorities having jurisdiction, and marked for intended use.

D. Central Battery Inverter System: UL 924 listed.

E. Comply with NFPA 70 and NFPA 101.

F. ANSI C 62.41 (IEEE 587)

G. ANSI C 62.42.45 (CAT A & B)

1.6 DELIVERY, STORAGE, AND HANDLING

A. Deliver equipment in fully enclosed vehicles.

B. Store equipment in spaces having environments controlled within manufacturers' written instructions for ambient temperature and humidity conditions for non operating equipment.

1.7 WARRANTY

A. UPS Module:

The Manufacturer shall warrant the UPS module against defects in material and workmanship for 24 months after initial start up or 30 months after ship date, whichever occurs first.

B. Battery

The battery manufacturer’s standard warranty shall pass through to the end user.

1. Standard, Valve-Regulated, Gas Recombinant, Lead-Calcium Batteries:

a. Full Warranty: One year .
b. Pro Rata: Nine years.

1.8 EXTRA MATERIALS

A. Furnish extra materials described below that match products installed and that are packaged with protective covering for storage and identified with labels describing contents. Deliver extra materials to Owner.

1. Fuses: One for every 10 of each type and rating, but no fewer than 2 of each.

PART 2 - PRODUCTS

2.1 MANUFACTURERS

A. Available Manufacturers: Subject to compliance with requirements, manufacturers offering products that may be incorporated into the Work include, but are not limited to, the following:

B. Manufacturers: Subject to compliance with requirements, provide products by one of the following:

1. Crucial Power Products or Approved Equal

2.2 INVERTER PERFORMANCE REQUIREMENTS

A. Fast-Transfer Central Battery Inverters: Automatically sense loss of normal ac supply and use a solid-state switch to transfer loads. Transfer in 2 milli seconds or less from normal supply to battery-inverter supply.

1. Operation: Unit supplies power to output circuits from a single, external, normal supply source. Unit automatically transfers load from normal source to internal battery/inverter source. Retransfer to normal is automatic when normal power is restored.

B. Maximum Acoustical Noise: Equipment Standard Rating

2.3 SERVICE CONDITIONS

A. Environmental Conditions: Inverter system shall be capable of operating continuously in the following environmental conditions without mechanical or electrical damage or degradation of operating capability:

1. Ambient Temperature for Electronic Components: -29 to 136 deg F
2. Relative Humidity: 0 to 95 percent, non condensing.
3. Altitude: Sea level to 4000 feet

2.4 INVERTERS

A. Description: Solid-state type, with the following operational features:

1. Automatically regulate output voltage to within plus or minus 5 percent.
2. Automatically regulate output frequency to within plus or minus .05 Hz, from no load to full load at unit power factor over the operating range of battery voltage.
3. Output Voltage Waveform of Unit: Sine wave with maximum 10 percent THD throughout battery operating-voltage range, from no load to full load.

   a. THD may not exceed 7 percent when serving a resistive load of 100 percent of unit rating.

4. Output Protection: Current-limiting and short-circuit protection.
5. Surge Protection.
6. Overload Capability: 125 percent for 5 minutes; 150 percent for 12 line cycles.

2.5 BATTERY CHARGER

A. Description: Solid-state, automatically maintaining batteries in fully charged condition when normal power is available. Capable of recharging the batteries within 24 hours after a full discharge.

2.6 BATTERIES

A. Description: Batteries are to be sealed lead calcium, maintenance free, with front mounted terminals for easy access and maintenance. Design life shall be 10 years.

2.7 ENCLOSURES

A. NEMA, Type 4x stainless steel cabinets with access to components through hinged doors with flush tumbler lock and latch.

B. Finish: Manufacturer's standard finish over corrosion-resistant prime treatment.

2.8 SEISMIC REQUIREMENTS

A. Central battery inverter assemblies, subassemblies, components, fastenings, supports, and mounting and anchorage devices shall be designed and fabricated to withstand seismic forces. The term "withstand" is defined in the "Manufacturer Seismic Qualification Certification" Paragraph in Part 1 "Submittals" Article.

2.9 CONTROL AND INDICATION

A. Description: Group displays, indications, and basic system controls on common control panel on front of central battery inverter enclosure.

B. Minimum displays, indicating devices, and controls shall include those in lists below. Provide sensors, transducers, terminals, relays, and wiring required to support listed items. Alarms shall include an audible signal and a visual display.

C. Indications: Plain-language messages on a digital LCD or LED.

1. Quantitative Indications:

a. Input voltage,
b. System output voltage.
c. System output current.
d. System output frequency.
e. DC bus voltage.
f. Battery current and direction (charge/discharge).
g. Elapsed time-discharging battery.

2. Basic Status Condition Indications:

a. Normal operation.
b. Load-on battery.
c. Inverter off.
d. Alarm condition exists.

3. Alarm Indications:

a. High/Low Battery charger voltage
b. Near low battery voltage
c. Low battery voltage
d. Load reduction fault
e. Overload.
f. Input overvoltage or under voltage.
g. Approaching end of battery operation.
h. High ambient temperature.
i. Inverter power supply fault.
j. System overload shutdown.

4. Controls:

a. Inverter on-off.
b. Start.
c. Battery test.
d. Alarm silence/reset.
e. Output-voltage adjustment.

D. Dry-form "C" contacts shall be available for remote indication of the following conditions:

1. Inverter on battery.
2. Inverter on-line.
3. Inverter in alarm condition.

E. Include the following minimum array:

1. Ready, normal-power on light.
2. Charge light.
3. Inverter supply load light.
4. Battery voltmeter.
5. AC output voltmeter with minimum accuracy of 2 percent of full scale.
6. Load ammeter.
7. Test switch to simulate ac failure.

F. Enclosure: Steel, with hinged lockable doors, suitable for floor mounting. Manufacturer's standard corrosion-resistant finish.

2.10 OPTIONAL FEATURES

A. Multiple Output Voltages: Supply unit branch circuits at different voltage levels if required. Transform voltages internally as required to produce indicated output voltages.

B. Emergency-Only Circuits: Automatically energize only when normal supply has failed.

C. Heating Capabilities: 500 Watt Strip Heater with Thermostat Control

2.11 OUTPUT DISTRIBUTION SECTION

A. Panelboard: Provide output circuit breaker assembly integral to equipment cabinet as per plans and specs.

2.12 SYSTEM MONITORING AND ALARMS

A. Remote Status and Alarm Panel: Labeled LEDs on panel faceplate shall indicate basic status conditions. Audible signal indicates alarm conditions. Silencing switch in face of panel silences signal without altering visual indication.

1. Cabinet and Faceplate: Surface or flush mounted to suit mounting conditions indicated.

B. Provisions for Remote Computer Monitoring: Communication module in unit control panel provides capability for remote monitoring of status, parameters, and alarms specified in Part 2 "Control and Indication" Article. Remote computer and connecting signal wiring will be provided by Owner. Include the following features:

1. Connectors and network interface units or modems for data transmission via RS-232 link.
2. Software shall be designed to control and monitor inverter system functions and to provide on-screen explanations, interpretations, diagnosis, action guidance, and instructions for use of monitoring indications and development of reports. Inc.
3. Include a fax option to report any system failures to a central location. Communications should be set up in a fashion where only one phone line is necessary to communicate remotely with all of the systems.

C. Battery-Cycle Warranty Monitoring: Electronic device, acceptable to battery manufacturer as a basis for warranty action, for monitoring charge-discharge cycle history of batteries covered by cycle-life warranty.

1. Basic Functional Performance: Automatically measures and records each discharge event, classifies it according to duration category, and totals discharges according to warranty criteria, displaying remaining warranted battery life on integral LCD.

2.13 SOURCE QUALITY CONTROL

A. Factory test complete inverter system including battery before shipment. Include the following:

1. Functional test and demonstration of all functions, controls, indicators, sensors, and protective devices.
2. Full-load test.
3. Transient-load response test.
4. Overload test.
5. Power failure test.

B. Observation of Test: Give 14 days' advance notice of tests and provide access for Owner's representative to observe tests at Owner's option.

C. Report test results. Include the following data:

1. Description of input source and output loads used. Describe actions required to simulate source load variation and various operating conditions and malfunctions.
2. List of indications, parameter values, and system responses considered satisfactory for each test action. Include tabulation of actual observations during test.
3. List of instruments and equipment used in factory tests.

PART 3 - EXECUTION

3.1 EXAMINATION

A. Examine areas and conditions for compliance with requirements for ventilation, temperature, humidity, and other conditions affecting performance.

1. Verify that manufacturer's written instructions for environmental conditions have been permanently established in spaces where equipment will be installed, before installation begins.

B. Examine roughing-in for electrical connections to verify actual locations of connections before installation.

C. Proceed with installation only after unsatisfactory conditions have been corrected.

3.2 INSTALLATION

A. Install system components on concrete base. Anchor equipment to concrete base according to equipment manufacturer's written instructions and according to seismic codes at Project.

1. Construct concrete base of dimensions indicated, but not less than 4 inches high and 4 inches larger in both directions than supported unit.
2. Install dowel rods to connect concrete base to concrete floor. Unless otherwise indicated, install dowel rods on 18 inch (450mm) centers around full perimeter of base.
3. Install epoxy-coated anchor bolts for supported equipment that extend through concrete base, and anchor into structural concrete floor.
4. Place and secure anchorage devices. Use supported equipment manufacturer's setting drawings, templates, diagrams, instructions, and directions furnished with items to be embedded.
5. Install anchor bolts to elevations required for proper attachment to supported equipment.
6. Install anchor bolts according to anchor-bolt manufacturer's written instructions.
7. Use 3000-psi (20.7-MPa) 28-day compressive-strength concrete and reinforcement.

B. Maintain minimum clearances and workspace at equipment according to manufacturer's written instructions and NFPA 70.

3.3 CONNECTIONS

A. Connections: Interconnect system components. Make connections to supply and load circuits according to manufacturer's wiring diagrams, unless otherwise indicated.

B. Ground equipment according to Division 16 Section "Grounding and Bonding."

1. Separately Derived Systems: Make grounding connections to grounding electrodes and bonding connections to metallic piping systems as indicated; comply with NFPA 70.

C. Connect wiring according to Division 16 Section "Conductors and Cables."

3.4 IDENTIFICATION

A. Identify equipment and components according to Division 16.

3.5 FIELD QUALITY CONTROL

A. Manufacturer's Field Service: Engage a factory-authorized service representative to inspect, test, and adjust components, assemblies, and equipment installations, including connections. Report results in writing.

B. Perform tests and inspections and prepare test reports.

1. Manufacturer's Field Service: Engage a factory-authorized service representative to inspect components, assemblies, and equipment installations, including connections, and to assist in testing.

C. Tests and Inspections:

1. Inspect interiors of enclosures for integrity of mechanical and electrical connections, component type and labeling verification, and ratings of installed components.
2. Test manual and automatic operational features and system protective and alarm functions.
3. Test communication of status and alarms to remote monitoring equipment.
4. Perform each visual and mechanical inspection and electrical test stated in NETA Acceptance Testing Specifications. Certify compliance with test parameters.
5. Test and adjust controls and safeties. Replace damaged and malfunctioning controls and equipment.

D. Remove and replace malfunctioning units and retest as specified above.

3.6 STARTUP SERVICE

A. Engage a factory-authorized service representative to perform startup service.

B. Verify that central battery inverter is installed and connected according to the Contract Documents.

C. Verify that electrical wiring installation complies with manufacturer's submittal and installation requirements in Division 16 Sections.

D. Complete installation and startup checks according to manufacturer's written instructions.

3.7 ADJUSTING AND CLEANING

A. Set field-adjustable switches and circuit-breaker trip ranges as indicated.

B. Install new filters in each equipment cabinet within 14 days from date of Substantial Completion.

3.8 DEMONSTRATION

A. Engage a factory-authorized service representative to train Owner's maintenance personnel to adjust, operate, and maintain central battery inverters.

END OF SECTION 263353

SECTION 265600 - EXTERIOR LIGHTING

PART 1 - GENERAL

1.1 SUMMARY

A. Section Includes:

1. Exterior luminaires with lamps and ballasts.

2. Refer to Lighting Control Devices 260923 for additional information.

1.2 SUBMITTALS

A. Product Data: For each luminaire and its support components, arranged in order of lighting unit designation. Include the following information:

1. Equipment specifications and data sheets identifying all materials used and methods of fabrication.

2. Assembly, layout and installation drawings with clearly marked dimensions.

3. Interconnecting wiring diagrams.

4. All fixture photometric data.

5. Accessories and finishes required.

1.3 QUALITY ASSURANCE

A. Electrical Components, Devices, and Accessories: Listed and labeled as defined in NFPA 70, by a qualified testing agency, and marked for intended location and application.

B. Comply with IEEE C2, "National Electrical Safety Code."

C. Comply with NFPA 70.

D. Testing: LED array and driver required to have LM80 testing data and complete fixture to have LM79 data.

E. Any substitutions must include a lighting analysis to demonstrate equal lighting levels and uniformity.

F. Luminaire shall bear the CSA label and be marked suitable for wet locations.

PART 2 - PRODUCTS

2.1 ACCEPTABLE MANUFACTURERS

A. The Contractor shall provide fixtures equal to those specified in fixture schedule, and/or from the following fixture categories:

1. LED Fixtures shall be as manufactured by Beacon Products. Traverse Model, or approved equal.

B. LED Drivers shall be as manufactured by Thomas Research or approved equal.

C. LED's shall be as manufactured by Nichia or approved equal.

2.2 LUMINAIRES

A. Provide the fixtures below as indicated in the 'Lighting Fixture Schedule' and as shown on the Contract Drawings.

B. All fixtures shall be complete with drivers, bezel optical system, printed circuit board, housing, hangars, supports, etc.

C. All fixtures shall be UL Listed.

D. Colors shall be standard colors as supplied by the manufacturer, unless otherwise noted by the owner and the architect.

2.3 DRIVERS FOR LED LAMPS

A. Include the following features in the LED driver unless it is otherwise indicated:

1. LED Driver shall accept 100V through 277V, 50 Hz to 60 Hz (UNIV).

2. Power factor shall be .92 at full load.

3. Electrical components shall be rated at 50,000 hours at full load and 40 degrees Celsius ambient conditions.

4. Component to component wiring within the luminaire may carry no more than 80 percent of the rated load and is listed by UL for use at 600 VAC at 50 degrees Celsius or higher.

2.4 LED BEZEL OPTICAL SYSTEM

A. Luminaire supplied with an optical one piece cartridge system consisting of an LED engine, LED lamps, optics, gasket and die cast aluminum bezel.

B. Cartridge shall be held together with internal brass standoffs soldered to the board.

C. Two piece die cut silicone and polycarbonate foam gasket ensures a weather proof seal around each individual LED and allows luminaire to be rated for high pressure hose down applications.

2.5 PRINTED CIRCUIT BOARD (PCB)

A. Aluminum thermal clad board with aluminum base layer 'high temperature' or equivalent dielectric copper circuit layer.

B. Circuit layer to be designed with copper pours to minimize thermal impedance across dielectric.

C. Board shall be supplied with fiberglass reinforced thermal pad with thermal conductivity.

D. Board shall be mounted to the heat sink using screws to ensure contact with thermal pad and heat sink. (Use of thermal grease will not be allowed).

2.6 WARRANTY

A. Luminaire shall be supplied with a 5 year limited warranty by the lighting manufacturer, which shall include LED arrays and LED drivers.

PART 3 - EXECUTION

3.1 LUMINAIRE INSTALLATION

A. Fasten luminaire to structural supports and columns as indicated on the contract drawings.

1. Use fastening methods and materials selected to resist seismic forces defined for the application and approved by manufacturer.

B. Adjust luminaires that require field adjustment or aiming.

C. Include adjustment of photoelectric device to prevent false operation of relay by artificial light sources, favoring a north orientation.

D. Support luminaires as indicated on the contract drawings.

E. All fixtures shall be made clean and free of dirt and debris that may affect the lighting performance of the luminaire.

F. Luminaire locations are subject to coordination with all other trades and final locations to be determined with the engineer's approvals.

G. Circuiting shall be as indicated on the contract drawings.

H. Contractor shall install fixtures at a mounting height as indicated on the contract drawings or instructed by the Engineer.

I. Luminaires shall be securely and seismically supported.

J. All luminaires shall be tested and an operating test completed. The equipment shall be demonstrated to operate in accordance with the requirements of this Section and the requirements of the lighting manufacturer. The owner and engineer shall be notified of testing completed and the results.

3.2 CORROSION PREVENTION

A. Aluminum: Do not use in contact with earth or concrete. When in direct contact with a dissimilar metal, protect aluminum by insulating fittings or treatment.

3.3 GROUNDING

A. Ground lighting system and support structures according to Division 26 Section "Grounding and Bonding for Electrical Systems."

3.4 SPARE PARTS

A. Supply 10% spare LED drivers for each type of luminaire supplied.

B. Spare part list shall be included with the shop drawing submittal and indicate the quantities, sizes and part numbers of the items to be furnished.

END OF SECTION 265600

PART 1 - GENERAL

1.1 DESCRIPTION OF WORK

A. The Work specified in this Section consists of furnishing and installing communication conduit with dragline and telephone equipment, where shown on contract drawings.

1.2 METRO NORTH TELEPHONE SYSTEM DESCRIPTION

A. This description and all related material specifications are included for reference to the system components. Metro North will furnish and install telephone cabling and terminations for final testing.

1.3 SUBMITTALS

A. Submit the following in accordance with Form 816 Article 1.20-1.05.02

B. Product Data: For the following:

1. Telephone handset.
2. Telephone enclosures.
3. Enclosure pedestal.

PART 2 - PRODUCTS

2.1 TELEPHONE EQUIPMENT

A. The Contractor shall furnish and install a system as described herein with equipment locations as shown on the drawings. It is the intent that a system complete in all respects be provided and installed.

The installation shall consist of Telephone System components and conduit which shall provide voice communication between two or more locations.

All equipment shall be Underwriters Laboratories listed and approved for the service required and meet Metro North Railroad requirements.

B. The telephone equipment shall consist of telephones with intercommunication and signaling capability mounted inside enclosure. Instruments mounted on platform shall be provided with a water tight enclosure BECO Model 14WP Series, 11 ga. aluminum. Pedestal shall be Myrmidon Corp., 54-inch pedestal, stainless steel with power coat black texture paint finish.

C. Conduit System: The Contractor shall install and provide complete conduit system as specified in the preceding sections of these specifications.

All conduits shall be 1 inch rigid galvanized steel with pull cord as noted on the drawings.

D. Telephone Handset: Platform telephone handsets shall be standard touch-tone type.

E. Telephone outlets shall conform to Section 262726.

PART 3 - EXECUTION

3.1 TELEPHONE INSTALLATION AND TESTING

A. Contractor shall perform complete ringing and talking test.

B. All telephones shall be mounted at a height where no operable part is more than 54 inches from the floor.

END OF SECTION 270000

SECTION 275116 - PUBLIC ADDRESS AND MASS NOTIFICATION SYSTEMS

PART 1 - GENERAL

1.1 DESCRIPTION OF WORK

A. The Work specified in this Section consists of furnishing and installing a raceway system for the public address system as indicated.

1.2 PUBLIC ADDRESS SYSTEM DESCRIPTION

A. This description, and all related material specifications below, are included for reference only. Metro-north will furnish and install all public address system equipment and speaker conductors, and central communications system cabinet.

1.3 SUBMITTALS

A. Submit the following in accordance with Form 816 Article 1.20-1.05.02

B. Product data for each type of product specified.

C. Maintenance data for materials and products, for inclusion in Operating and Maintenance Manual. Provide complete manual material concurrently with system submittal and provide updated final versions of manuals one month before completion of construction and final system turnover.

1.4 QUALITY ASSURANCE

A. Electrical Component Standard: Provide work complying with applicable requirements of NFPA 70-2008; "National Electrical Code".

PART 2 – PRODUCTS

(All products other than conduit, boxes, and 120 volt supplies to speaker equipment will be provided and installed by Metro-North).

A. PA SYSTEM SPEAKERS

1. SPEAKER - As supplied and specified by Metro North Railroad, "Atlas Soundolier" Model No. APF-15T, Omni-Purpose 15 Watt Flange Mounting Loudspeaker.

   A. Tap Settings on Speakers: Use Tap 2 for all pole mounted speakers and Tap 3 for all speakers mounted under the canopy. Waiting Room Speaker in Building shall be set to Tap 1. Field adjustments will be made by Metro North Railroad.

2. SPEAKER (INSIDE OF STATION BUILDING) - As supplied and specified by Metro North Railroad, "Atlas Soundolier" Model No. WD417-72, 8" Slant Wall Mount Speaker/Baffle Package 25/70.7V-4W xfmr.

   Loudspeaker/baffle package features a walnut grain wall baffle/enclosure with an attractive black fabric grille. Baffles are designed with a 9.5° slope to provide

directional sound dispersion offset in the direction of radiation.

Each package contains a high-quality 8" dia. loudspeaker with a 5-ounce ceramic magnet and pre-assembled dual-voltage transformer.

3. SPEAKER ENCLOSURE - As supplied and specified by Metro North Railroad, "Atlas Soundolier" Model No. VP410-S, Surface mounted unidirectional and bi-directional vandal proof baffles for 8" loudspeakers.

4. SPEAKER ADAPTER PLATE - As supplied and specified by Metro North Railroad, "Atlas Soundolier" Model No. FAMT-6, Adapter to mount standard 8" enclosure and/or baffle.

B. CABLE/WIRING

1. As supplied and specified by Metro North Railroad, "West Penn Wire", Part No. 226, 14/2 Stranded bare copper conductors, unshielded with an overall jacket. CL2R, NEC Article 800 NEC Rating, UL Listed. Contractor shall provide in 1000' rolls, not 500' rolls. No Substitutes or Equivalents.

C. All speaker mounting hardware shall be stainless steel.

PART 3 – EXECUTION

3.1 EXAMINATION

A. Examine conditions, with the Installer present, for compliance with requirements and other conditions affecting the performance of the system work.

B. Do not proceed until unsatisfactory conditions have been corrected.

C. No splices under the platforms will be allowed or in any junction boxes. All splices shall be done in the speaker enclosures only.

D. The contractor shall coordinate with Metro North Railroad before disconnecting any old speaker lines or equipment.

E. Temporary speakers may be hung, while platform work is in progress from temporary poles.

F. No speakers shall be reused. All existing speakers shall be turned over to Metro North for reuse or disposal.

G. Old, removed speakers shall be reused for temporary service once inspected and approved by Metro North Railroad.

3.2 INSTALLATION

A. General: Install system in accordance with NFPA 70 2008; and other applicable codes.

B. In accordance with Section 260543 "Raceways and Boxes for Electrical Systems."

3.3 CLEANING AND PROTECTION

A. Prior to final acceptance, clean system components and protect from damage and deterioration.

END OF SECTION

State of Connecticut

Department of Transportation

SUPPLEMENTAL SPECIFICATIONS

TO

THE STANDARD SPECIFICATIONS

FOR

ROADS, BRIDGES AND INCIDENTAL CONSTRUCTION

FORM 816

2004

JULY 2013

July 2013

DIVISION I
GENERAL REQUIREMENTS AND COVENANTS

SECTION		SPECIFICATION NUMBER
1.01	Definition of Terms and Permissible Abbreviations	101
1.02	Proposal Requirements and Conditions	102
1.03	Award and Execution of Contract	103
1.05	Control of the Work	105
1.07	Legal Relations and Responsibilities	107
1.08	Prosecution and Progress	108
1.09	Measurement and Payment	109
1.10	Environmental Compliance	110
1.11	Claims	111
1.20	General Clauses for Facilities Construction	120

DIVISION II
CONSTRUCTION DETAILS

SECTION		SPECIFICATION NUMBER
2.02	Roadway Excavation, Formation of Embankment and Disposal of Surplus Material	202
2.05	Trench Excavation	205
2.12	Subbase	212
3.04	Processed Aggregate Base	304
4.01	Concrete Pavement	401
5.14	Prestressed Concrete Members	514
6.01	Concrete for Structures	601
6.03	Structural Steel	603
6.12	Concrete Cylinder Curing Box	612
6.51	Culverts	651
7.02	Piles	702
8.22	Temporary Precast Concrete Barrier Curb	822
9.01	Bollard	901
9.10	Metal Beam Rail	910
9.18	Three-Cable Guide Railing (I-Beam Post) and Anchorages	918
9.22	Bituminous Concrete Sidewalk Bituminous Concrete Driveway	922
9.44	Topsoil	944
9.49	Furnishing, Planting and Mulching Trees, Shrubs, Vines and Ground Cover Plants	949
9.75	Mobilization	975
10.01	Trenching and Backfilling	1001
10.10	Concrete Handhole	1010
11.13	Control Cable	1113
12.10	Epoxy Resin Pavement Markings, Symbols and Legends	1210

DIVISION III
MATERIALS SECTION

SECTION		SPECIFICATION NUMBER
M.06	Metals	M06
M.08	Drainage	M08
M.11	Masonry Facing, Cement and Dry Rubble Masonry, Brick, Mortar	M11
M.13	Roadside Development	M13
M.16	Traffic Control Signals	M16
M.17	Elastomeric Materials	M17
M.18	Signing	M18

July 2013
STANDARD SPECIFICATIONS
FOR
ROADS, BRIDGES AND INCIDENTAL CONSTRUCTION
FORM 816

ERRATA

PG.	ARTICLE OR SUBARTICLE	LINE NO.	CORRECTION	REV. DATE
iv	Table of Contents	11	Change “Guild” to “Guide”	Jan05
4	1.01.01	8	After the end of the definition for “Plans,” insert as a subset, “A. Standard Sheets – Standardized plans containing details approved by the Department and the FHWA, for construction of a given type on any project, included in contracts on an as-needed basis.”	
6	1.01.02	41	Change “Aluminum Association” to “Aluminum Association, Inc. (The)”	Jan05
6	1.01.02	42	Delete “AAA – Aluminum Alloy Association”	Jan05
7	1.01.02	1	Insert “AABC – Associated Air Balance Council”	Jan05
7	1.01.02	1	Insert “AAMA – American Architectural Manufacturers Association”	Jan05
7	1.01.02	12	Insert “ABMA – American Bearing Manufacturers Association”	Jan05
7	1.01.02	12	Insert “ACGIH – American Council of Government Industrial Hygienists”	Jan05
7	1.01.02	12	Change “American Concrete Institute” to “ACI International (American Concrete Institute)”	Jan05
7	1.01.02	14	Insert “ADAAG – Americans with Disabilities Act (ADA) Accessibility Guidelines for Buildings and Facilities”	Jan05
7	1.01.02	16	Change “Associated General Contractors of America” to “Associated General Contractors of America (The)”	Jan05
7	1.01.02	19	Insert “AI – Asphalt Institute”	Jan05
7	1.01.02	19	Change “American Institute of Architects” to “American Institute of Architects (The)”	Jan05
7	1.01.02	20	Delete “AIEE – American Institute of Electrical Engineers”	Jan05
7	1.01.02	24	Delete “ALI – Associated Laboratories, Inc.”	Jan05
7	1.01.02	26	Change “American Lumber Standard Committee” to “American Lumber Standards Committee, Incorporated”	Jan05
7	1.01.02	27	Change “Air Movement and Control Association” to “Air Movement and Control Association International, Inc.”	Jan05
7	1.01.02	31	Delete “AOEC – Area of Environmental Concern”	Jan05
7	1.01.02	33	Change “The Engineered Wood Association” to “APA-The Engineered Wood Association”	Jan05
7	1.01.02	37	Change “Air Conditioning” to “Air-Conditioning”	Jan05
8	1.01.02	7	Change “Air Conditioning” to “Air-Conditioning”	Jan05
8	1.01.02	8	Change “American Society of Mechanical Engineers” to “ASME International (The American Society of Mechanical Engineers International)”	Jan05
8	1.01.02	18	Delete “ATA – American Transit Association”	Jan05
8	1.01.02	20	Delete “AWG – American Wire Gauge”	Jan05
8	1.01.02	22	Change “Wood-Preservers” to “Wood-Preservers’”	Jan05

PG.	ARTICLE OR SUBARTICLE	LINE NO.	CORRECTION	REV. DATE
8	1.01.02	35	Change “Building Officials and Code Administrators International” to “BOCA International, Inc.”.....	Jan05
8	1.01.02	38	Change “Library” to “Laboratory”.....	Jan05
9	1.01.02	2	Change “CONNDOT” to “ConnDOT”.....	Jan05
9	1.01.02	6	Delete “CPI – Clay Pipe Institute”.....	Jan05
9	1.01.02	9	Delete “CS – Commercial Standard”.....	Jan05
9	1.01.02	10	Change “Construction Specifications Institute” to “Construction Specifications Institute (The)”.....	Jan05
9	1.01.02	12	Change “Tower” to ”Technology”.....	Jan05
9	1.01.02	17	Delete “DFPA – Douglas Fir Plywood Association”.....	Jan05
9	1.01.02	19	Change “Department of Defense” to “Department of Defense Military Specifications and Standards”.....	Jan05
9	1.01.02	21	Change “Association” to “Alliance”.....	Jan05
9	1.01.02	23	Delete “U.S. Department of Transportation”.....	Jan05
9	1.01.02	28	Delete “U.S. Department of Transportation”.....	Jan05
9	1.01.02	30	Insert “FMG – FM Global”	Jan05
9	1.01.02	31	Delete “U.S. Department of Transportation”.....	Jan05
10	1.01.02	2	Delete “HASP – Health and Safety Plan”.....	Jan05
10	1.01.02	3	Delete “HMA – Hot Mix Asphalt or Bituminous Concrete”.....	Jan05
10	1.01.02	4	Delete “HPMA – Hardwood Plywood Manufacturers Association”.....	Jan05
10	1.01.02	5	Insert “HPVA – Hardwood Plywood & Veneer Association”...	Jan05
10	1.01.02	9	Insert “ICC – International Code Council”.....	Jan05
10	1.01.02	9	Change “Insulated Cable Engineers Association” to “Insulated Cable Engineers Association, Inc.”.....	Jan05
10	1.01.02	10	Change “Institute of Electrical and Electronics Engineers” to “Institute of Electrical and Electronics Engineers, Inc. (The)”	Jan05
10	1.01.02	21	Change “Military Standardization Documents, U.S. Department of Defense” to “(MILSPEC) Military Specification and Standards”.....	Jan05
10	1.01.02	24	Delete “MS – Military Specifications”.....	Jan05
10	1.01.02	26	Change “Manufacturers Standardization Society of the Valve and Fittings Industry Inc.” to “Manufacturers Standardization Society of The Valve and Fittings the Valve Industry Inc.”.....	Jan05
10	1.01.02	29	Change “National Association of Architectural Metal Manufacturers (The)” to “National Association of Architectural Metal Manufacturers”.....	Jan05
10	1.01.02	31	Insert “NADCA – National Air Duct Cleaners Association”.....	Jan05
10	1.01.02	34	Delete “NBS – National Bureau of Standards”.....	Jan05
10	1.01.02	35	Delete “NC – National Course”.....	Jan05
11	1.01.02	3	Delete “NCPRC – National Clay Pipe Research Corporation”.....	Jan05
11	1.01.02	10	Change “International Electrical Testing Association” to “InterNational Testing Association”.....	Jan05
11	1.01.02	12	Delete “NFS – NFS International”.....	Jan05
11	1.01.02	13	Insert “NHLA – National Hardwood Lumber Association”.....	Jan05
11	1.01.02	18	Insert “NLGA – National Lumber Grades Authority”.....	Jan05

PG.	ARTICLE OR SUBARTICLE	LINE NO.	CORRECTION	REV. DATE
11	1.01.02	18	Delete “NLMA – National Lumber Manufacturers Association”.....	Jan05
11	1.01.02	21	Insert “NSF – NSF International”.....	Jan05
11	1.01.02	21	Change “National Terrazzo and Mosaic Association (The)” to “National Terrazzo and Mosaic Association, Inc.”.....	Jan05
11	1.01.02	26	Delete “PCC – Portland Cement Concrete”.....	Jan05
11	1.01.02	28	Delete “PLP – Plastic Laminate Producers”.....	Jan05
11	1.01.02	29	Delete “PS – Product Standard of NBS, U.S. Department of Commerce”.....	Jan05
11	1.01.02	32	Delete “RLMI – Reflector and Lamp Manufacturers’ Institute”.....	Jan05
11	1.01.02	35	Delete “SAWP – Society of American Wood Preservers”.....	Jan05
11	1.01.02	36	Insert “SDI – Steel Deck Institute”.....	Jan05
11	1.01.02	36	Insert “S.D.I. – Steel Door Institute”.....	Jan05
11	1.01.02	37	Insert “SJI – Steel Joist Institute”.....	Jan05
11	1.01.02	37	Insert “SMACNA – Sheet Metal and Air Conditioning Contractors’ National Association”.....	Jan05
11	1.01.02	37	Change “Southern Pine Inspection Bureau” to “Southern Pine Inspection Bureau (The)”.....	Jan05
12	1.01.02	9	Change “Tile Council of America“ to “Tile Council of America, Inc.”.....	Jan05
12	1.01.02	10	Insert “TIA – Telecommunications Industry Association”.....	Jan05
12	1.01.02	10	Insert “TPI – Truss Plate Institute, Inc.”.....	Jan05
12	1.01.02	10	Delete “UBC – Uniform Building Code”.....	Jan05
12	1.01.02	11	Change “Underwriters Laboratories, Inc.” to “Underwriters Laboratories Inc.”.....	Jan05
12	1.01.02	12	Delete “UMTA – Urban Mass Transportation Administration, U.S. Department of Transportation”.....	Jan05
12	1.01.02	14	Delete “UPC – Uniform Plumbing Code”.....	Jan05
12	1.01.02	15	Insert “USGBC – U.S. Green Building Council”.....	Jan05
12	1.01.02	16	Delete “USS – United States Standard”.....	Jan05
12	1.01.02	17	Delete “VOC – Volatile Synthetic Organic Chemicals”.....	Jan05
12	1.01.02	19	Delete “WCLA – West Coast Lumberman’s Association”.....	Jan05
12	1.01.02	20	Insert “WCSC – Window Covering Safety Council”.....	Jan05
12	1.01.02	20	Delete “WSA – Temporary Waste Stockpile Area”.....	Jan05
12	1.01.03	31	Insert “AOEC – Area of Environmental Concern”.....	Jan05
12	1.01.03	31	Insert “AWG – American Wire Gauge”.....	Jan05
13	1.01.03	16	Insert “HASP – Health and Safety Plan”.....	Jan05
13	1.01.03	29	Insert “PCC – Portland Cement Concrete”.....	Jan05
14	1.01.03	25	Insert “VOC – Volatile Organic Compound”.....	Jan05
14	1.01.03	26	Insert “WSA – Temporary Waste Stockpile Area”.....	Jan05
22	1.03.07	23	Change “**$1,000,000**” to “$**2,000,000**”.....	Jan05
32	1.05.01	38	Change “Connecticut General Statutes” to “CGS”.....	Jan05
45	1.05.15	29	Change “Department of Public Utility Control” to “DPUC”.....	Jan05
105	1.20	29	Change “Workmen and Equipment” to “Personnel and Equipment”.....	Jan05
105	1.20	31	Delete “Completion of Construction Work and”.....	Jan05
107	1.20-1.02.13	15	Change “Americans with Disabilities Act Accessibility Guidelines” to “ADAAG”.....	Jan05

PG.	ARTICLE OR SUBARTICLE	LINE NO.	CORRECTION	REV. DATE
108	1.20-1.04.01	26	Change “othewise” to “otherwise”.....	July07
119	1.20-1.05.25	4	Change “Certificate of Compliance” to “C.O.C.”.....	July07
122	1.20-1.06.08	3	Change “Certificate of Compliance” to “C.O.C.”.....	July07
131	1.20-1.08.05	34	Change “Workmen and Equipment” to “Personnel and Equipment”.....	Jan05
132	1.20-1.08.11	12	Change “Certificate of Compliance” to “C.O.C.”.....	July07
133	1.20-1.08.13	7	Delete “Completion of Construction Work and”.....	Jan05
133	1.20-1.08.13	9	Change “Certificate of Compliance” to “C.O.C.”.....	July07
133	1.20-1.08.13	15	Change “Certificate of Compliance” to “C.O.C.”.....	July07
133	1.20-1.08.13	20	Change “Certificate of Compliance” to “C.O.C.”.....	July07
143	2.02.01	28	Insert “, swales” after “channels”.....	July08
245	4.06.04	11	Change “**Over weight (mass) Adjustments -**” and replace with indented “Over weight (mass) Adjustments -” as a subsection of “**1. Bituminous Concrete Class ( ).**”.....	Jan05
259	5.03.03	24	Change “Such requirements of Article 5.02.03 as are pertinent shall apply equally to this construction.” to “All such plans prepared by the Contractor shall be considered working drawings and shall be submitted with engineering calculations to the Engineer for review in accordance with the requirements of Article 1.05.02.”.....	July10
265	5.07.02	24	Change “M.08.01-26” to “M.08.01-19 Geotextiles”.....	July13
270	5.08.02	4	Change “M.06.02-12” to “M.06.02-4 Welded Stud Shear Connectors”.....	July10
271	5.09.02	39	Change “M.06.02-12” to “M.06.02-4 Welded Stud Shear Connectors”.....	July10
272	5.13.02	22	Change “M.08.01-27” to “M.08.01-20 or M.08.01-21 PVC Pipe or PVC Gravity Pipe”.....	July13
284	5.14.03-12	12	Change “Article M.06.02-13” to “Subarticle 6.03.03 (a) Shop Fabrication Notice”.....	July10
351	6.03.03	8	Change “MS MIL-C-11796B” to “MIL-C-11796B”.....	Jan05
378	6.52.02	2	Change “M.08.01-22” to “M.08.01-11 Reinforced Concrete Culvert End”.....	July13
378	6.52.02	3	Change “M.08.01-23” to “M.08.01-6 Metal Culvert End”.....	July13
416	7.51.02-(4)	7	Change “M.08.01-26” to “M.08.01-19 Geotextiles”.....	July13
418	7.55.02	26	Change “M.08.01-26” to “M.08.01-19 Geotextiles”.....	July13
434	9.04.02	14	Change “Subarticle M.06.02-1” to “Article 6.03.02”.....	July10
434	9.04.02	15	Change “M.06.02-9(d) for metal bridge rail (cast post—aluminum).” to “Malleable castings shall conform to the requirements of the specifications for malleable iron castings, ASTM A 47, Grade No. 32510 (22010). Ductile iron castings shall conform to the Specifications for Ductile Iron Castings, ASTM A 536, Grade 60-40-18 (414-276-18) unless otherwise specified. In addition to the specified test coupons, test specimens from parts integral with the castings, such as risers, shall be tested for castings having a weight (mass) of more than 1000 pounds (455 kilograms) to determine that the required quality is obtained in the castings in the finished condition.”.....	July10

PG.	ARTICLE OR SUBARTICLE	LINE NO.	CORRECTION	REV. DATE
452	9.14.02	2	Change “Subarticle M.06.02-8” to “ASTM A 53, Type E or S, Grade A, Schedule 40 Black Finish.”.....	July10
452	9.14.02	4	Change “Subarticle M.06.02-9(d) except that the grade shall be 32510” to “the specifications for malleable iron castings, ASTM A 47, Grade No. 32510 (22010). Ductile iron castings shall conform to the Specifications for Ductile Iron Castings, ASTM A 536, Grade 60-40-18 (414-276-18) unless otherwise specified. In addition to the specified test coupons, test specimens from parts integral with the castings, such as risers, shall be tested for castings having a weight (mass) of more than 1000 pounds (455 kilograms) to determine that the required quality is obtained in the castings in the finished condition.”.....	July10
496	9.70.01	37	Change “CDOT” to “ConnDOT”.....	Jan05
544	10.11.02	5	Change “M.08.01-25 or M.08.01-27” to “M.08.01-20 or M.08.01-21”.....	July13
569	11.14.05	19	Change “Span Wire” to “Span Wire (Type)”.....	July12
577	12.01.03	7	Change “6.03.03-19” to “6.03.03-4 (f) High Strength Bolted Connections”.....	July10
577	12.01.03	23	Change “Article 6.03.03-15” to “Subarticle 6.03.03-4(c) Bearings”.....	July10
577	12.01.03	27	Change “Article 6.03.03-19 (c)(3)” to “Subarticle 6.03.03-4 (f) High Strength Bolted Connections Turn-of-Nut Installation Method”.....	July10
604	18.00.02	7	Change “National Cooperative Highway Research Program (NCHRP)” to “NCHRP”.....	Jan05
623	M.03.01	9	Change “Cement and Concrete Reference Laboratory” to “CCRL”.....	Jan05
623	M.03.01	13	Change “Cement and Concrete Reference Laboratory” to “CCRL”.....	Jan05
626	M.03.01	2	Change “Cement and Concrete Reference Laboratory” to “CCRL”.....	Jan05
626	M.03.01	3	Change “NBS” to “NIST”.....	Jan05
632	M.03.01	18	Change “Cement and Concrete Reference Laboratory” to “CCRL”.....	Jan05
638	M.04.02	37	Change “Asphalt Institute’s” to “AI’s”.....	Jan05
711	M.10.02-1	17	Change “Subarticle M.06.02-1(b)” to “Article M.06.02”.....	July10
720	M.10.08-3	2	Change “Subarticle M.06.02-1(b)” to “Article M.06.02”.....	July10
735	M.13.03	22	Change “AOAC International” to “AOAC”.....	Jan05
760	M.15.15	21	Change “non-fusible” to “fused”.....	Jan05
780	M.16.08	41	Change “Americans With Disabilities Act (ADA)” to “ADA”....	Jan05
790	M.16.10	24	Change “Underwriter’s Laboratory” to “UL”.....	Jan05
800	M.17.01	19	Change “AAA 6061-T6” to “AA 6061-T6”.....	Jan05
829	Pay Items	4	Add “7.02, Dynamic Pile Driving Analysis (PDA) Test, ea. (ea.)”.....	July13
829	Pay Items	5	Add “7.02, Pre-Augering of Piles, l.f. (m)”.....	July13
837	Pay Items	24	Change “Span Wire” to “Span Wire (Type)”.....	July12
845	Index	6	Add page 133 to “Acceptance of Project”.....	Jan05

PG.	ARTICLE OR SUBARTICLE	LINE NO.	CORRECTION	REV. DATE
846	Index	13	Add page 107 to “Bids: Consideration of”.....	Jan05
847	Index	28	Add page 132 to “Cleaning Up, Final”.....	Jan05
849	Index	25	Add page 107 to “Consideration of Bids”.....	Jan05
849	Index	39	Add page 108 to “Contract: Intent of”.....	Jan05
850	Index	3	Add page 133 to “Contractor’s: Responsibility, Termination of the”.....	Jan05
850	Index	13	Add page 114 to “Cooperation by Contractor”.....	Jan05
850	Index	15	Add page 114 to “Coordination of Special Provisions, Plans, Supplemental Specifications and Standard Specifications and Other Contract Requirements”.....	Jan05
850	Index	40	Add page 128 to “Cutting and Patching:”.....	Jan05
852	Index	16	Add page 106 to “Examination of Plans, Specifications, Special Provisions and Site of Work”.....	Jan05
852	Index	38	Insert “Facilities, Temporary…126”.....	Jan05
853	Index	7	Add page 132 to “Final: Cleaning Up”.....	Jan05
854	Index	35	Add page 115 to “Inspection”.....	Jan05
855	Index	11	Add page 108 to “Intent of Contract”.....	Jan05
855	Index	22	Add page 106 to “Knowledge of Applicable Laws”.....	Jan05
855	Index	25	Add page 106 to “Laws: Knowledge of Applicable”.....	Jan05
856	Index	27	Add page 120 to “Materials: Source of Supply and Quality”....	Jan05
856	Index	28	Add page 121 to “Materials: Storage of”.....	Jan05
857	Index	33	Add page 133 to “Operation and Maintenance Manuals:”.....	Jan05
857	Index	34	Change page 133 to 136 for “Equipment and Systems Maintenance Manual”.....	Jan05
859	Index	2	Add page 131 to “Personnel and Equipment”.....	Jan05
860	Index	6	Add page 114 to “Plans: Coordination of Special Provisions, Supplemental Specifications and Standard Specifications and Other Contract Requirements”.....	Jan05
860	Index	7	Add page 106 to “Plans: Examination of”.....	Jan05
860	Index	30	Change page 108 to 112 for “Product Data”.....	Jan05
860	Index	31	Change page 108 to 112 for “Product Samples”.....	Jan05
860	Index	32	Add page 124 to “Product Selection:”.....	Jan05
861	Index	12	Add page 126 to “Prosecution of Work”.....	Jan05
861	Index	38	Change page 115 to 135 for “Record Drawings”.....	Jan05
863	Index	3	Add page 125 to “Sanitary Provisions”.....	Jan05
863	Index	18	Insert “Services, Temporary…126”.....	Jan05
863	Index	23	Add page 111 to “Shop Drawings”.....	Jan05
864	Index	4	Add page 106 to “Site of Work, Examination of”.....	Jan05
864	Index	12	Add page 120 to “Source of Supply and Quality”.....	Jan05
864	Index	19	Add page 114 to “Special Provisions: Coordination of Plans, Supplemental Specifications and Standard Specifications and Other Contract Requirements”.....	Jan05
864	Index	20	Add page 106 to “Special Provisions: Examination of”.....	Jan05
864	Index	26	Add page 114 to “Specifications: Coordination of Plans, Special Provisions and Other Contract Requirements”.....	Jan05
864	Index	27	Add page 106 to “Specifications: Examination of”.....	Jan05
864	Index	43	Add page 121 to “Storage”.....	Jan05
865	Index	27	Delete page 108 from “Submittals: Shop Drawings”.....	Jan05

PG.	ARTICLE OR SUBARTICLE	LINE NO.	CORRECTION	REV. DATE
865	Index	45	Insert “Temporary Utilities, Services, and Facilities…126”....	Jan05
866	Index	2	Add page 133 to “Termination of Contractor’s Responsibility”.....	Jan05
866	Index	23	Insert “Training…137”.....	Jan05
866	Index	45	Add page 133 to “Utility Services”.....	Jan05
867	Index	8	Insert “Warranties…121”.....	Jan05
867	Index	24	Add page 126 to “Work: Prosecution of”.....	Jan05

CONNECTICUT
SUPPLEMENTAL SPECIFICATION
SECTION 1.01
DEFINITIONS OF TERMS AND PERMISSIBLE ABBREVIATIONS

1.01.01 — Definitions:

Add the following definition:

SUBSTANTIAL COMPLETION: The date at which the performance of all work on the Project has been completed except minor or incidental items, final cleanup, work required under a warranty, and repair of unacceptable work, and provided the Engineer has determined that:

A. The Project is safe and convenient for use by the public, and
B. All traffic lanes including all safety appurtenances are in their final configuration, and
C. Failure to complete the work and repairs excepted above does not result in the deterioration of other completed work; and provided further, that the value of work remaining to be performed, repairs, and cleanup is less than one percent (1%) of the estimated final Contract amount, and
D. If applicable a Certificate of Compliance has been issued.

1.01.02 — Abbreviations, Publications, and Standards:

Delete the like-named abbreviations and replace with the following abbreviations:

"AA – Aluminum Association, Inc. (The)
ALSC – American Lumber Standard Committee, Incorporated
AMCA – Air Movement and Control Association International, Inc.
AOSA – Association of Official Seed Analysts, Inc.
ASME – ASME International (The American Society of Mechanical Engineers International)
CTI – Cooling Technology Institute
EIA – Electronic Industries Alliance
ICEA – Insulated Cable Engineers Association, Inc.
IEEE – Institute of Electrical and Electronics Engineers, Inc. (The)
NTMA – National Terrazzo & Mosaic Association, Inc. (The)
TCA – Tile Council of America, Inc."

Delete the Following abbreviations:

"ADA – Americans with Disabilities Act
AFPA – American Forest and Paper Association
BOCA – Building Officials and Code Administrators International
FM – Factory Mutual System
ICBO – International Conference of Building Officials

MIL – Military Standardization Documents, U.S Department of Defense
MS – Military Specifications
NWWDA – National Wood Window and Door Association
NFS – NFS International”

Add the following abbreviations:

“ADAAG – Americans with Disabilities Act (ADA)
AABC – Associated Air Balance Council
AAMA – American Architectural Manufacturers Association
ABMA – American Bearing Manufacturers Association
AF&PA – American Forest & Paper Association
AI – Asphalt Institute
BIA – Brick Industry Association (The)
CDA – Copper Development Association Inc.
CGA – Compressed Gas Association
FMG – FM Global
HI – Hydraulic Institute
HPVA – Hardwood Plywood & Veneer Association
ICC – International Code Council
ICC-ES – ICC Evaluation Service, Inc.
IEC – International Electrotechnical Commission
IGMA – Insulating Glass Manufacturers Alliance
ISO – International Organization for Standardization
MILSPEC – Military Specification and Standards
NADCA –National Air Duct Cleaners Association
NFRC – National Fenestration Rating Council
NHLA – National Hardwood Lumber Association
NSF – NSF International (National Sanitation Foundation International)
PDI – Plumbing & Drainage Institute
SDI – Steel Deck Institute - *or* - Steel Door Institute
SJI – Steel Joist Institute
SMACNA – Sheet Metal and Air Conditioning Contractors’ National Association
SPRI – Single Ply Roofing Industry
SWRI – Sealant, Waterproofing, & Restoration Institute
TIA/EIA – Telecommunications Industry Association/Electronic Industries Alliance
TRB – Transportation Research Board
UFAS – Uniform Federal Accessibility Standards
USGBC – U.S. Green Building Council
WDMA – Window & Door Manufacturers Association”

1.01.03 — Abbreviations and Terms:

Add the following abbreviations:

“cu.dm - Cubic Decimeter
cu.m - Cubic Meters

dm^3 - Cubic Decimeter
m^2 - Square Meter
m^3 - Cubic Meters
sq.m - Square Meter
Vert. M - Vertical Meter
vert.m - Vertical Meter”

CONNECTICUT
SUPPLEMENTAL SPECIFICATION
SECTION 1.03
AWARD AND EXECUTION OF THE CONTRACT

Replace Article 1.03.07 in its entirety with the following:

1.03.07—Insurance:

Coverage shall be on a primary basis.

The Contractor shall carry and maintain at all times during the term of the Contract the insurance coverages required by this Article and any additional coverages(s) or higher minimum insurance coverage amount(s) required by the Special Provisions of the Contract.

If the Project includes work on or adjacent to railroad property additional insurance may be required as specified by the railroad. Please refer to the Special Provisions for any additional insurance requirements by the railroad.

1. **Worker's Compensation Insurance:** With respect to all operations the Contractor performs and all those performed for it by subcontractors, the Contractor shall carry, and require each subcontractor to carry, Workers' Compensation insurance as required by the laws of the State of Connecticut.

Employer's Liability insurance shall be provided in amounts not less than $100,000 per accident for bodily injury by accident; $100,000 policy limit by disease and $100,000 per employee for bodily injury by disease. Each Workers' Compensation policy shall contain the U.S. Longshoreman's and Harbor Workers' Act endorsement when work is to be performed over or adjacent to navigable water.

2. **Commercial General Liability Insurance:** With respect to the operations the Contractor performs and also those performed for it by subcontractors, the Contractor shall carry, and require each subcontractor to carry, Commercial General Liability insurance, including Contractual Liability, Products and Completed Operations, Broad Form Property Damage and Independent Contractors.

Products and completed operations insurance for ongoing and completed operations shall be maintained for a period of one (1) year after the acceptance of the project by the Department in accordance with Article 1.08.14. See chart below for applicable minimum coverage amounts.

Contract Amount ($)	Minimum Single Occurrence Amount ($)	Minimum Annual Aggregate Amount ($)
0-2,000,000	1,000,000	2,000,000
>2,000,001-10,000,000	2,000,000	4,000,000
>10,000,000	4,000,000	8,000,000

In Facilities construction projects, if underground work is to be undertaken, each policy shall have coverage for and exclusions removed for “Explosion, Collapse and Underground” (“XCU”).

3. **Automobile Liability Insurance:** The Contractor shall obtain automobile liability insurance covering the operation of all motor vehicles, including those hired or borrowed, that are used in connection with the Project for all damages arising out of: (1) bodily injury to or death of all persons and/or (2) injury to or destruction of property; in any one accident or occurrence. This policy shall not be subject to an annual aggregate limitation. See chart above for applicable minimum coverage amounts.

4. **Owner’s and Contractor’s Protective Liability Insurance for and in the Name of the State:** With respect to the Contractor’s Project operations and also those of its subcontractors, the Contractor shall carry, for and on behalf of the State for each accident or occurrence resulting in damages from (1) bodily injury to or death of persons and/or (2) injury to or destruction of property. See chart below for applicable minimum coverage amounts.

Contract Amount ($)	Minimum Single Occurrence Amount ($)	Minimum Annual Aggregate Amount ($)
0 - 20 Million	1,000,000	1,000,000
20 Million - 50 Million	2,000,000	2,000,000
> 50 Million	4,000,000	4,000,000

5. **Railroad Protective Liability Insurance:** When the Contract involves work within fifty (50) feet of the railroad right-of-way or State-owned rail property, with respect to Project operations and also those of its subcontractors, the Contractor shall carry, and require each subcontractor to carry, Railroad Protective Liability Insurance providing coverage of at least $2,000,000 for each accident or occurrence resulting in damages from (1) bodily injury to or death of all persons and/or (2) injury to or destruction of property, and subject to that limit per accident or occurrence, an aggregate coverage of at least $6,000,000 for all damages during the policy period, and with all entities falling within any of the following listed categories named as insured parties: (i) the owner of the railroad right-of-way, (ii) the owner of any railcar licensed or permitted to travel within that affected portion of railroad right-of-way, and (iii) the operator of any railcar licensed or permitted to travel within that affected portion of the railroad right-of-way, and with the State, if not falling within any of the above-listed categories, also named as an insured party.

6. **Blasting:** When explosives are to be used in the Project, the Commercial General Liability insurance policy shall include XCU coverage, in the same limits as the per occurrence policy limits.

7. **Protection and Indemnity Insurance for Marine Construction Operations in Navigable Waters:**

If a vessel of any kind will be involved in Project work, the Contractor shall obtain the following additional insurance coverage:

A. Protection and Indemnity Coverage of at least $300,000 per vessel or equal to at least the value of hull and machinery, whichever is greater.

B. If there is any limitation or exclusion with regard to crew and employees under the protection and indemnity form, the Contractor must obtain and keep in effect throughout the Project a workers' compensation policy, including coverage for operations under admiralty jurisdiction, with a limit of liability of at least $300,000 per accident or a limit equal to at least the value of the hull and machinery, whichever is greater, or for any amount otherwise required by statute.

8. **Builder's Risk Insurance:** For Facilities construction projects, the Contractor shall maintain comprehensive replacement cost builder's risk (completed value) insurance providing coverage for the entire work at the Project site, including all fixtures, machinery and equipment, any heating, cooling and constituting a permanent part of the building and shall cover portions of work located away from the site, but intended for use at the site. If it is determined that all or a portion of the project is located within an area designated as a Special Flood Hazard Area, the Contractor shall maintain flood insurance (no less than $10,000,000 sublimit). The State of Connecticut shall be named as Loss Payee. Equipment breakdown coverage may be sub limited to 50% of the project cost.

9. **Architects and Engineer's Professional Liability Insurance for Structural Engineer:** If required, limits will be specified in Article 1.03.07 of the Special Provisions of the Contract or Article 1.05.02.

10. **Umbrella Liability Insurance:** The Contractor may satisfy the minimum limits required for Commercial General Liability and Automobile Liability Insurance using Umbrella Liability Insurance. In the event that the Contractor obtains Umbrella Liability Insurance to meet the minimum coverage requirements for Commercial General Liability or Automobile Liability Insurance coverage, the Umbrella Liability Insurance policy shall have an annual aggregate at a limit not less than twice the single occurrence and must specifically endorse the State of Connecticut as an additional insured. Specifically for Bridge Projects with a low bid equal to or higher than $80,000,000, the Umbrella Liability Insurance policy must have a minimum limit of at least $25,000,000.

11**.** **Certificate of Insurance:** Before the Contract is executed, the Contractor must provide to the Department a certificate of insurance acceptable to the Commissioner and executed by an insurance company or companies satisfactory to the State of Connecticut for the insurance coverage(s) required by this Article and the Special

Provisions of the Contract. The Contractor shall maintain the required insurance coverage during the entire term of the Contract. The certificate of insurance must clearly include the name of the insured and identify the project for which it is being issued.

12. **Copies of Policies:** The Contractor shall provide, within five (5) business days, a copy or copies of all applicable insurance policies when requested by the State. In providing said policies, the Municipality may redact provisions of the policy that are proprietary. This provision shall survive the expiration or termination of the Contract.

13. **Sovereign Immunity:** The Contractor may not assert the defense of sovereign immunity in the adjustment of claims or in the defense of any claim or suit brought against the Contractor or the State, unless the State, in writing, requests that the Contractor do so or consents to its doing.

14. **Contractor Assumes Costs:** The Contractor shall assume and pay all costs and billings for premiums, deductibles, self-insured retentions and audit charges earned and payable under the required insurance.

15. **State Named as Additional Insured:** The State must be named as an additional insured party for the Commercial General Liability and Automobile Liability insurance policies required by this Article and the Special Provisions to the Contract, and any Umbrella Liability Insurance, as applicable, obtained in accordance with this Article. Each policy shall waive right of recovery (waiver of subrogation) against the State of Connecticut.

16. **Termination or Change of Insurance:**

A. The Contractor shall notify the Department of any cancelation of insurance carrier or change to the required insurance coverage by submitting a new insurance certificate to the Department immediately following said cancelation or change in required coverage.

B. It is the responsibility of the Contractor to maintain evidence of a current insurance coverage with the Department for the duration of contract. It is the responsibility of the Contractor to file with the Department all renewals and new certificates of insurance issued due to changes in policy terms or changes in insurance carriers prior to the expiration dates on the forms already on file with the Department.

17. **Duration of Coverage**. The Contractor shall keep all the required insurance in continuous effect until the date that the Department designates for the termination of the Contractor's responsibility, as defined by Article 1.08.14.

18. **Compensation:** There shall be no direct compensation allowed the Contractor on account of any premium or other charge necessary to obtain and keep in effect any insurance or bonds in connection with the Project, but the cost thereof shall be considered included in the general cost of the Project work.

CONNECTICUT
SUPPLEMENTAL SPECIFICATION
SECTION 1.05
CONTROL OF THE WORK

Replace Article 1.05.08 – Vacant with the following:

1.05.08—SCHEDULES AND REPORTS:

When a project coordinator is not required by the Contract the following shall apply:

Baseline Bar Chart Construction Schedule: Within 20 calendar days after contract award the Contractor shall develop a comprehensive bar chart as a baseline schedule for the project. The bar chart schedule shall be submitted to the Engineer for approval and shall be based on the following guidelines:
1. The bar chart schedule shall contain a list of activities that represents the major activities of the project. At a minimum, this list should include a breakdown by individual structure or stage, including major components of each. The bar chart schedule shall contain sufficient detail to describe the progression of the work in a comprehensive manner. As a guide, 10 to 15 bar chart activities should be provided for each $1 million of contract value. The following list is provided as an example only and is not meant to be all-inclusive or all-applicable:

General Activities Applicable to all projects

Project Constraints
- -Winter shutdowns
- -Environmental permits/application time of year restrictions
- -Milestones
- -Third Party approvals
- -Long lead time items (procurement and fabrication of major elements)
- -Adjacent Projects or work by others

Award
Notice to Proceed
Signing (Construction, temporary, permanent by location)
Mobilization
Permits as required
Field Office
Utility Relocations
Submittals/shop drawings/working drawings/product data
Construction of Waste Stock pile area
Clearing and Grubbing
Earthwork (Borrow, earth ex, rock ex etc.)
Traffic control items (including illumination and signalization)
Pavement markings
Roadway Construction (Breakdown into components)
Drainage (Breakdown into components)

Culverts
Plantings (including turf establishment)
Semi-final inspection
Final Cleanup

As required the following may supplement the activities listed above for the specific project types indicated:

a. For bridges and other structures, include major components such as abutments, wingwalls, piers, decks and retaining walls; further breakdown by footings, wall sections, parapets etc.

Temporary Earth Retention Systems
Cofferdam and Dewatering
Structure Excavation
Piles/test piles
Temporary Structures
Removal of Superstructure
Bearing Pads
Structural Steel (Breakdown by fabrication, delivery, installation, painting etc.)
Bridge deck

b. Multiple location projects such as traffic signal, incident management, lighting, planting and guiderail projects will be broken down first by location and then by operation. Other major activities of these types of projects should include, but are not limited to:

Installation of anchors
Driving posts
Foundations
Trenching and Backfilling
Installation of Span poles/mast arms
Installation of luminaries
Installation of cameras
Installation of VMS
Hanging heads
Sawcut loops
Energizing equipment

c. Facility Projects – Facilities construction shall reflect the same breakdown of the project as the schedule of values:

Division 2 – Existing Conditions
Division 3 – Concrete
Division 4 – Masonry
Division 5 – Metals

Division 6 – Wood, Plastic, and Composites
Division 7 – Thermal and Moisture Protection
Division 8 – Openings
Division 9 – Finishes
Division 10 – Specialties
Division 11 – Equipment
Division 12 - Furnishings
Division 13 – Special Construction
Division 14 – Conveying Equipment
Division 21 – Fire Suppression
Division 22 – Plumbing
Division 23 – Heating, Ventilating, and Air Conditioning
Division 26 – Electrical
Division 27 – Communications
Division 28 – Electronic Safety and Security
Division 31 – Earthwork
Division 32 – Exterior Improvements
Division 33 - Utilities

2. If the Engineer determines that additional detail is necessary, the Contractor shall provide it.
3. Each activity shall have a separate schedule bar. The schedule timeline shall be broken into weekly time periods with a vertical line to identify the first working day of each week.
4. The bar chart schedule shall show relationships among activities. The critical path for the Project shall be clearly defined on the schedule. The schedule shall show milestones for major elements of work, and shall be prepared on a sheet, or series of sheets of sufficient width to show data for the entire construction period.
5. If scheduling software is used to create the bar chart schedule, related reports such as a predecessor and successor report, a sort by total float, and a sort by early start shall also be submitted.

6. Project activities shall be scheduled to demonstrate that the construction completion date for the Project will occur prior to expiration of the Contract time. In addition, the schedule shall demonstrate conformance with any other dates stipulated in the Contract.
7. The Contractor is responsible to inform its subcontractor(s) and supplier(s) of the project schedule and any relevant updates.
8. There will be no direct payment for furnishing schedules, the cost thereof shall be considered as included in the general cost of the work.
9. For projects without a Mobilization item, 5% of the contract value will be withheld until such time as the Baseline Schedule is approved.

Monthly Updates: No later than the 10th day of each month, unless directed otherwise by the Engineer, the Contractor shall deliver to the Engineer three copies of the schedule to show the work actually accomplished during the preceding month, the actual time spent on each activity, and the estimated time needed to complete any

activity which has been started but not completed. Each time bar shall indicate, in 10% increments, the estimated percentage of that activity which remains to be completed. As the Project progresses, the Contractor shall place a contrasting mark in each bar to indicate the actual percentage of the activity that has been completed.

The monthly update shall include revisions of the schedule necessitated by revisions to the Project directed by the Engineer (including, but not limited to extra work), during the month preceding the update. Similarly, any changes of the schedule required due to changes in the Contractor's planning or progress shall also be included. The Engineer reserves the right to reject any such revisions. If the schedule revisions extend the contract completion date, due to extra or added work or delays beyond the control of the Contractor, the Contractor shall submit a request in writing for an extension of time in accordance with Article 1.08.08. This request shall be supported by an analysis of the schedules submitted previously.

Any schedule revisions shall be identified and explained in a cover letter accompanying the monthly update. The letter shall also describe in general terms the progress of the Project since the last schedule update and shall identify any items of special interest.

If the Contractor fails to provide monthly schedule updates, the Engineer has the right to hold 10% of the monthly estimated payment, or $5,000, whichever is less, until such time as an update has been provided in accordance with this provision.

Biweekly Schedules: Each week, the Contractor shall submit to the Engineer a two week look-ahead schedule. This short-term schedule may be handwritten but shall clearly indicate all work planned for the following two week period.

Recovery Schedules: If the updated schedule indicates that the Project has fallen behind schedule, the Contractor shall either submit a time extension request in accordance with 1.08.08 or immediately institute steps acceptable to the Engineer to improve its progress of the Project. In such a case, the Contractor shall submit a recovery plan, as may be deemed necessary by the Engineer, to demonstrate the manner in which an acceptable rate of progress will be regained.

Replace the first paragraph of Article 1.05.12 – Payrolls with the following:

For each week of the Project from the first week during which an employee of the Contractor does Project work to which prevailing wage requirements apply, until the last week on which such an employee does such work, the Contractor shall furnish to the Engineer certified copies of payrolls showing (a) the names of the employees who worked on the Project and whose work is subject to prevailing wage requirements, (b) the specific days and hours and numbers of hours that each such employee worked on the Project, and (c) the amount of money paid to each such employee for Project work. Each such payroll shall include the statement(s) of compliance with prevailing wage laws required by the State of Connecticut and, if applicable, by the Federal government. Said payrolls must contain all information required by Connecticut General Statutes Section 31-53 (as it may be revised). For contracts subject to Federal prevailing wage requirements, each payroll shall also contain the information required by the Davis Bacon and Related Acts (DBR). All of the payroll requirements in this Article shall also apply to the work of any subcontractor or other party that performs work on the Project site, and the Contractor shall be responsible for ensuring that each such party meets said requirements.

Add the following Article:

1.05.17 - WELDING

The Contractor shall ensure that all welding of materials permanently incorporated into the work, and welding of materials used temporarily during construction of the work is performed in accordance with the following codes:

- American Welding Society (AWS) Structural Welding Code – Steel – ANSI/AWS D1.1: Miscellaneous steel items that are statically loaded including but not limited to columns, and floor beams in buildings, railings, sign supports, cofferdams, tubular items, and modifications to existing statically loaded structures.
- AWS Structural Welding Code – Aluminum – AWS D1.2/D1.2M: Any aluminum structure or member including but not limited to brackets, light standards, and poles.
- AWS Structural Welding Code – Sheet Steel – AWS D1.3/D1.3M: Sheet steel and cold-formed members 0.18 in.(4.6 mm) or less in thickness used as, but not limited, to decking and stay-in-place forms.
- AWS Structural Welding Code – Reinforcing Steel – AWS D1.4/D1.4M: Steel material used in the reinforcement of cast-in-place or pre-cast Portland cement concrete elements including but not limited to bridge decks, catch basin components, walls, beams, deck units, and girders.
- AASHTO/AWS – Bridge Welding Code, AASHTO/AWS D1.5/D1.5M: Steel highway bridges and other dynamically loaded steel structures. Also includes sign supports, and any other fracture critical structure.

The edition governing the work shall be in effect on the date the Contract was advertised for solicitation of bids.

The Contractor is responsible to provide a Certified Welding Inspector in accordance with the above noted codes. The cost for this service is included in the general cost of the work.

All welders shall be certified by the Engineer in accordance with Section 6.03.

CONNECTICUT
SUPPLEMENTAL SPECIFICATION
SECTION 1.07
LEGAL RELATIONS AND RESPONSIBILITIES

Article 1.07.05 – Load Restrictions

Delete the entire article and replace with the following:

" **(a) Vehicle Weights:** This subarticle will apply to travel both on existing pavements and pavements under construction. The Contractor shall comply with all legal load restrictions as to vehicle size, the gross weight of vehicles, and the axle weight of vehicles while hauling materials. Throughout the duration of the contract, the Contractor shall take precautions to ensure existing and newly installed roadway structures and appurtenances are not damaged by construction vehicles or operations.

Unless otherwise noted in contract specifications or plans, on and off road equipment of the Contractor, either loaded or unloaded, will not be allowed to travel across any bridge or on any highway when such a vehicle exceeds the statutory limit or posted limit of such bridge or highway. Should such movement of equipment become necessary the Contractor shall apply for a permit from the Department for such travel, as provided in the Connecticut General Statutes (CGS). The movement of any such vehicles within the project limits or detour routes shall be submitted to the Engineer for project record. Such permit or submittal will not excuse the Contractor from liability for damage to the highway caused by its equipment.

The Contractor is subject to fines, assessments and other penalties that may be levied as a result of violations by its employees or agents of the legal restrictions as to vehicle size and weight.

(b) Storage of Construction Materials/Equipment on Structures: Storage is determined to be non-operating equipment or material. The Contractor shall not exceed the statutory limit or posted limit for either an existing or new structure when storing materials and/or construction equipment. When a structure is not posted, then the maximum weight of equipment or materials stored in each 12 foot wide travel lane of any given span shall be limited to 750 pounds per linear foot combined with a 20,000 pound concentrated load located anywhere within the subject lane. If anticipated storage of equipment or material exceeds the above provision, then the Contractor shall submit his proposal of storage supported by calculations stamped by a Professional Engineer registered in the State of Connecticut, the the Engineer for approval 14 days prior to the storage operation. Operations related to structural steel demolition or erection shall follow the guidelines under Section 6.03. All other submittals shall include a detailed description of the material/equipment to be stored, the quantity of storage if it is stockpiled materials, the storage location, gross weight with supporting calculations if applicable, anticipated duration of storage and any environmental safety, or traffic protection that may be required. Storage location on the structure shall be clearly defined in the field. If structures are in a state of staged construction or demolition, additional structural analysis may be required prior to authorization of storage."

Article 1.07.18 – Use of State Property

After Subarticle **(h)** *add the following sentence:*

"Gore areas are not available for disposal of surplus material."

CONNECTICUT
SUPPLEMENTAL SPECIFICATION
SECTION 1.08
PROSECUTION AND PROGRESS

Article 1.08.01 – Transfer of Work or Contract:

Replace the last paragraph with the following:

The Contractor shall not sublet, sell, transfer, assign, or otherwise dispose of the Contract or any portion thereof, or of the work provided for therein, or of its right, title, or interest therein, to any individual or entity without the written consent of the Commissioner. No payment will be made for such work until written consent is provided by the Commissioner.

Article 1.08.07 – Determination of Contract Time:

Replace the fifth paragraph with the following:

The total elapsed time in calendar days, computed as described above, from the commencement date specified in the Engineer's "Notice to Proceed" to the “Substantial Completion” date specified in the Engineer's "Notice of Substantial Completion" shall be considered as the time used in the performance of the Contract work.

Article 1.08.09 – Failure to Complete Work on Time:

Replace the second paragraph with the following:

If the last day of the initial Contract time or the initial Contract date determined for Substantial Completion is before December 1 in the given year, liquidated damages as specified in the Contract shall be assessed against the Contractor per calendar day (including any days during a winter shutdown period) from that day until the date on which the Project is substantially completed.

1.08.12—Final Inspection:

Replace the first paragraph with the following:

If the Engineer determines that the work may be substantially complete, a Semi Final Inspection will be held as soon as practical. After the Semi Final Inspection is held and the Engineer determines that the requirements for Substantial Completion have been satisfied the Engineer will prepare a “Notice of Substantial Completion”.

When the Contractor has completed all work listed in the “Notice of Substantial Completion” the Contractor shall prepare a written notice requesting a Final Inspection and a “Certificate of Acceptance of Work”. The Engineer will hold an Inspection of the Project as soon as practical after the Engineer determines that the Project may be completed. If the Engineer deems the Project complete, said inspection shall constitute the Final Inspection, and the Engineer will notify the Contractor in writing that the Final Inspection has been performed.

1.08.13 – Acceptance of Work and Termination of the Contractor’s Responsibility:

Replace the only paragraph with the following:

The Contractor’s responsibility for non-administrative Project work will be considered terminated when the final inspection has been held, any required additional work and final cleaning-up have been completed, all final operation and maintenance manuals have been submitted, and all of the Contractor’s equipment and construction signs have been removed from the Project site. When these requirements have been met to the satisfaction of the Engineer, the Commissioner will accept the work by certifying in writing to the Contractor that the non-administrative Project work has been completed.

CONNECTICUT
SUPPLEMENTAL SPECIFICATION
SECTION 1.09
MEASUREMENT AND PAYMENT

Article 1.09.04 – Extra and Cost-Plus Work

Delete the word "bonding" *under section* ***(a) Labor****, (3).*

Delete existing section (e) and replace with the following:

(e) Administrative Expense: When extra work on a cost-plus basis is performed by an authorized subcontractor, the Department will pay the Contractor an additional 7.5% for that work; such payment will be in addition to the percentage payments described in (a), (b), (c) and (d) above, as a reimbursement for the Contractor's administrative expense in connection with such work. Approval of such additional payments will be given only after the Contractor provides to the Engineer receipted invoices for all relevant costs.

Change Section designation for Miscellaneous from:

(f) Miscellaneous to: **(g) Miscellaneous**

Add the following as ***(f)****:*

(f) Bonding Costs: For bonding on the total cost of the cost-plus work including administrative expenses as outlined in (e) above, the Contractor shall receive its actual cost. The Contractor shall provide to the Engineer documentation, satisfactory to the Engineer in form and substance, of all such costs.

CONNECTICUT
SUPPLEMENTAL SPECIFICATION
SECTION 1.10
ENVIRONMENTAL COMPLIANCE

Add the following Article:

1.10.08 – VEHICLE EMISSIONS

All motor vehicles and/or construction equipment (both on-highway and non-road) shall comply with all pertinent State and Federal regulations relative to exhaust emission controls and safety.

The Contractor shall establish staging zones for vehicles that are waiting to load or unload at the contract area. Such zones shall be located where the emissions from the vehicles will have minimum impact on abutters and the general public.

Idling of delivery trucks, dump trucks, and other equipment shall not be permitted in excess of 3 minutes during periods of non-activity except as allowed by the Regulations of Connecticut State Agencies Section 22a-174-18(b)(3)(c):

No mobile source engine shall be allowed "to operate for more than three (3) consecutive minutes when the mobile source is not in motion, except as follows:

(i) When a mobile source is forced to remain motionless because of traffic conditions or mechanical difficulties over which the operator has no control,

(ii) When it is necessary to operate defrosting, heating or cooling equipment to ensure the safety or health of the driver or passengers,

(iii) When it is necessary to operate auxiliary equipment that is located in or on the mobile source to accomplish the intended use of the mobile source,

(iv) To bring the mobile source to the manufacturer's recommended operating temperature,

(v) When the outdoor temperature is below twenty degrees Fahrenheit (20 degrees F) [negative seven degrees Celsius (-7 degrees C)],

(vi) When the mobile source is undergoing maintenance that requires such mobile source be operated for more than three (3) consecutive minutes, or

(vii) When a mobile source is in queue to be inspected by U.S. military personnel prior to gaining access to a U.S. military installation."

All work shall be conducted to ensure that no harmful effects are caused to adjacent sensitive receptors. Sensitive receptors include but are not limited to hospitals, schools, daycare facilities, elderly housing and convalescent facilities. Engine exhaust shall be located away from fresh air intakes, air conditioners, and windows.

A Vehicle Emissions Mitigation plan will be required for areas where extensive work will be performed within (less than 50 feet (15 meters)) to sensitive receptors. No work will proceed until a sequence of construction and a Vehicle Emissions Mitigation plan is submitted in writing to the Engineer for review and all comments are addressed in a manner acceptable to the Engineer. The mitigation plan must address the control of vehicle emissions from all vehicles and construction equipment.

Any costs associated with this “Vehicle Emissions” article shall be included in the general cost of the Contract. In addition, there shall be no time granted to the contractor for compliance with this notice. The contractor’s compliance with this notice and any associated regulations shall not be grounds for claims as outlined in Section 1.11 – “Claims”.

CONNECTICUT
SUPPLEMENTAL SPECIFICATION
SECTION 1.11
CLAIMS

Add the following Section:

1.11.01 – General: When filing a formal claim under Section 4-61 (referred to as "Section 4-61" below) of the C.G.S. (as revised), either as a lawsuit in the Superior Court or as a demand for arbitration, the Contractor must follow the procedures and comply with the requirements set forth in this Section of the Specifications. This Section does not, unless so specified, govern informal claims for additional compensation which the Contractor may bring before the Department. The Contractor should understand, however, that the Department may need, before the Department can resolve such a claim, the same kinds of documentation and other substantiation that it requires under this Section. It is the intent of the Department to compensate the Contractor for actual increased costs caused by or arising from acts or omissions on the part of the Department that violate legal or contractual duties owed to the Contractor by the Department.

1.11.02 – Notice of Claim: Whenever the Contractor intends to file a formal claim against the Department under Section 4-61, seeking compensation for additional costs, the Contractor shall notify the Commissioner in writing (in strict compliance with Section 4-61) of the details of said claim. Such written notice shall contain all pertinent information described in Article 1.11.05 below.

Once formal notice of a claim under C.G.S. Section 4-61 (b) (as revised) has been given to the Commissioner, the claimant may not change the claim in any way, in either concept or monetary amount, (1) without filing a new notice of claim and demand for arbitration to reflect any such change and (2) without the minimum period of six months after filing of the new demand commencing again and running before any hearing on the merits of the claim may be held. The only exception to this limitation will be for damages that continue to accrue after submission of the notice, in ways described and anticipated in the notice.

1.11.03 – Record Keeping: The Contractor shall keep daily records of all costs incurred in connection with its construction-related activities on behalf of the Department. These daily records shall identify each aspect of the Project affected by matters related to any claim for additional compensation that the Contractor has filed, intends to file, or has reason to believe that it may file against the Department; the specific Project locations where Project work has been so affected; the number of people working on the affected aspects of the Project at the pertinent time(s); and the types and number of pieces of equipment on the Project site at the pertinent time(s). If possible, any potential or anticipated effect on the Project's progress or schedule which may result in a claim by the Contractor should also be noted contemporaneously with the cause of the effect, or as soon thereafter as possible.

1.11.04 – Claim Compensation: The payment of any claim, or any portion thereof, that is deemed valid by the Engineer shall be made in accordance with the following provisions of this Article:

(a) Compensable Items: The liability of the Department for claims will be limited to the following specifically-identified items of cost, insofar as they have not otherwise been paid for by the Department, and insofar as they were caused solely by the actions or omissions of the Department or its agents (except that with regard to payment for extra work, the Department will pay to the Contractor the mark-ups provided for in Article 1.04.05.):

(1) Additional Project-site labor expenses.
(2) Additional costs for materials.
(3) Additional, unabsorbed Project-site overhead (**e.g.**, for mobilization and demobilization).
(4) Additional costs for active equipment.
(5) For each day of Project delay or suspension caused solely by actions or omissions of the Department, either

(i) an additional ten percent (10%) of the total amount of the costs identified in Subarticles (1) through (4) above; except that if the delay or suspension period prevented the Contractor from incurring enough Project costs under Subarticles (1) through (4) during that period to require a payment by the Department that would be greater than the payment described in subparagraph (ii) below, then the payment for affected home office overhead and profit shall instead be made in the following *per diem* amount:

(ii) six percent (6%) of the original total Contract amount divided by the original number of days of Contract time.

Payment under either (i) or (ii) hereof shall be deemed to be complete and mutually-satisfactory compensation for any unabsorbed home office overhead and any profit related to the period of delay or suspension.

(6) Additional equipment costs. Only actual equipment costs shall be used in the calculation of any compensation to be made in response to claims for additional Project compensation. Actual equipment costs shall be based upon records kept in the normal course of business and in accordance with generally-accepted accounting principles. Under no circumstances shall Blue Book or other guide or rental rates be used for this purpose (unless the Contractor had to rent the equipment from an unrelated party, in which case the actual rental charges paid by the Contractor, so long as they are reasonable, shall be used). Idle equipment, for instance, shall be paid for based only on its actual cost to the Contractor.
(7) Subcontractor costs limited to, and determined in accordance with, Subarticles (1), (2), (3), (4), and (5) above and applicable statutory and case law. Such subcontractor costs may be paid for by the Department only (a) in the context of an informal claims settlement or (b) if the Contractor has itself paid or legally-assumed, present unconditional liability for those subcontractor costs.

(b) Non-Compensable Items: The Department will have no liability for the following specifically-identified non-compensable items:

(1) Profit, in excess of that provided for herein.
(2) Loss of anticipated profit.
(3) Loss of bidding opportunities.
(4) Reduction of bidding capacity.
(5) Home office overhead in excess of that provided for in Article 1.11.04(a)(5) hereof.
(6) Attorneys fees, claims preparation expenses, or other costs of claims proceedings or resolution.
(7) Any other consequential or indirect expenses or costs, such as tort damages, or any other form of expense or damages not provided for in these Specifications or elsewhere in the Contract.

1.11.05 – Required Claim Documentation: All claims shall be submitted in writing to the Commissioner, and shall be sufficient in detail to enable the Engineer to ascertain the basis and the amount of each claim, and to investigate and evaluate each claim in detail. As a minimum, the Contractor must provide the following information for each and every claim and sub-claim asserted:

(a) A detailed factual statement of the claim, with all dates, locations and items of work pertinent to the claim.
(b) A statement of whether each requested additional amount of compensation or extension of time is based on provisions of the Contract or on an alleged breach of the Contract. Each supporting or breached Contract provision and a statement of the reasons why each such provision supports the claim, must be specifically identified or explained.
(c) Excerpts from manuals or other texts which are standard in the industry, if available, that support the Contractor's claim.
(d) The details of the circumstances that gave rise to the claim.
(e) The date(s) on which any and all events resulting in the claim occurred, and the date(s) on which conditions resulting in the claim first became evident to the Contractor.
(f) Specific identification of any pertinent document, and detailed description of the substance of any material oral communication, relating to the substance of such claim.
(g) If an extension of time is sought, the specific dates and number of days for which it is sought, and the basis or bases for the extension sought. A critical path method, bar chart, or other type of graphical schedule that supports the extension must be submitted.

(h) When submitting any claim over $50,000, the Contractor shall certify in writing, under oath and in accordance with the formalities required by the contract, as to the following:
    (1) That supporting data is accurate and complete to the Contractors best knowledge and belief;
    (2) That the amount of the dispute and the dispute itself accurately reflects what the Contractor in good faith believes to be the Departments liability;
    (3) The certification shall be executed by:
        a. If the Contractor is an individual, the certification shall be executed by that individual.
        b. If the Contractor is not an individual, the certification shall be executed by a senior company official in charge at the Contractor's plant or location involved or an officer or general partner of the Contractor having overall responsibility for the conduct of the Contractors affairs.

1.11.06 – Auditing of Claims: All claims filed against the Department shall be subject to audit by the Department or its agents at any time following the filing of such claim. The Contractor and its subcontractors and suppliers shall cooperate fully with the Department's auditors. Failure of the Contractor**,** its subcontractors, or its suppliers to maintain and retain sufficient records to allow the Department or its agents to fully evaluate the claim shall constitute a waiver of any portion of such claim that cannot be verified by specific, adequate, contemporaneous records, and shall bar recovery on any claim or any portion of a claim for which such verification is not produced. Without limiting the foregoing requirements, and as a minimum, the Contractor shall make available to the Department and its agents the following documents in connection with any claim that the Contractor submits:

(1) Daily time sheets and foreman's daily reports.
(2) Union agreements, if any.
(3) Insurance, welfare, and benefits records.
(4) Payroll register.
(5) Earnings records.
(6) Payroll tax returns.
(7) Records of property tax payments.
(8) Material invoices, purchase orders, and all material and supply acquisition contracts.
(9) Materials cost distribution worksheets.
(10) Equipment records (list of company equipment, rates, etc.).
(11) Vendor rental agreements
(12) Subcontractor invoices to the Contractor, and the Contractor's certificates of payments to subcontractors.
(13) Subcontractor payment certificates.
(14) Canceled checks (payroll and vendors).
(15) Job cost reports.
(16) Job payroll ledger.

(17) General ledger, general journal (if used), and all subsidiary ledgers and journals**,** together with all supporting documentation pertinent to entries made in these ledgers and journals.
(18) Cash disbursements journals.
(19) Financial statements for all years reflecting the operations on the Project.
(20) Income tax returns for all years reflecting the operations on the Project.
(21) Depreciation records on all company equipment**,** whether such records are maintained by the company involved, its accountant, or others.
(22) If a source other than depreciation records is used to develop costs for the Contractor's internal purposes in establishing the actual cost of owning and operating equipment, all such other source documents.
(23) All documents which reflect the Contractor's actual profit and overhead during the years that the Project was being performed**,** and for each of the five years prior to the commencement of the Project.
(24) All documents related to the preparation of the Contractor's bid**,** including the final calculations on which the bid was based.
(25) All documents which relate to the claim or to any sub-claim, together with all documents that support the amount of damages as to each claim or sub-claim.
(26) Worksheets used to prepare the claim, which indicate the cost components of each item of the claim, including but not limited to the pertinent costs of labor, benefits and insurance, materials, equipment, and subcontractors' damages, as well as all documents which establish the relevant time periods, individuals involved, and the Project hours and the rates for the individuals.
(27) The name, function, and pertinent activity of each Contractor's or subcontractor's official, or employee involved in or knowledgeable about events that give rise to, or facts that relate to, the claim.
(28) The amount(s) of additional compensation sought and a break-down of the amount(s) into the categories specified as payable under Article 1.11.04 above.
(29) The name, function, and pertinent activity of each Department official, employee or agent involved in or knowledgeable about events that give rise to, or facts that relate to, the claim.

CONNECTICUT
SUPPLEMENTAL SPECIFICATION
SECTION 1.20
GENERAL CLAUSES FOR FACILITIES CONSTRUCTION

1.20-1.00 – General:

Delete the last sentence of the first paragraph and replace with the following:

"Facilities Construction is defined as the type of construction that requires the issuance of a Certificate of Compliance (C.O.C.) by the State Building Inspector or his authorized representative at the completion of a project, and includes site work considered ancillary to this type of construction."

Add the following article:

1.20-1.01.01—Definitions:

OWNER: Where used herein, it is synonymous with Department or State.

1.20-1.02.04 – Examination of Plans, Specifications, Special Provisions and Site of Work:

Delete the first sentence of the first paragraph and replace with the following:

"CSI-formatted specifications are organized into Divisions and Sections based on the CSI's "MasterFormat" numbering system."

1.20-1.02.13 – Knowledge of Applicable Laws:

Delete Items 1 through 9 in their entirety and replace with the following:

1. "The 2003 International Building Code with the State Building Code, including latest Connecticut Supplement and Amendments.
2. The 2003 International Plumbing Code.
3. The 2003 International Mechanical Code.
4. The 2003 International Existing Building Code.
5. The 2009 International Energy Conservation Code.
6. The 2005 NFPA 70 National Electrical Code.
7. The 2003 ICC/ANSI A117.1.

8. The Fire Safety Code, including latest Connecticut Supplement and Amendments.
9. The 2003 International Fire Code.
10. The 2003 NFPA 1 Uniform Fire Code.
11. The 2003 NFPA 101 Life Safety Code."

Add the following as the new last paragraph:

"All work to be performed by the Contractor shall comply with the "Americans with Disabilities Act Accessibility Guidelines."

1.20-1.03.01 – Consideration of Bids:

Delete the entire article and replace with the following:

"The apparent low bidder shall submit to the Manager of Contracts a Schedule of Values within 14 days after bid opening. Any other Contractor that the Department may subsequently designate as the apparent lowest bidder shall make the aforesaid submission within 14 days from the date on which the Department notifies said Contractor that it has become the apparent lowest bidder. If, however, the Department deems it necessary for such a subsequently designated Contractor to make said submission within a shorter period of time, the Contractor shall make the submission within the time designated by the Department.

The total in the Schedule of Values shall equal the bid dollar amount for the Major Lump Sum Item (MLSI).

The Schedule of Values shall be divided into "Line Items" listed separately for each CSI Section of the Special Provisions. An additional line item for "Mobilization" may be incorporated into the Schedule of Values; however, this item may not exceed 10% of the value of the MLSI. The "Mobilization" line item will also include costs associated with "General Conditions" and "Insurance/Bonding." Where requested by the Department, the Contractor shall break down the line items further into more specific line items.

In the event that this Contract is terminated or a portion of this Contract is deleted for any reason or in any way allowable by law under this Contract after the apparent low bidder has been awarded the Contract, the Schedule of Values will <u>not</u> be used for estimating payment due the Contractor for work completed prior to such termination of the Contract or deletion of work thereunder. In the case of Contract termination, payment shall be made in accordance with Article 1.05.14."

1.20-1.05.02--Shop Drawings, Product Data, Product Samples and Quality Assurance Submittals

Delete the last sentence of the first paragraph and replace with the following:

"All facsimiles or other electronic documents from the Contractor shall be followed by an official transmittal."

Delete the third paragraph and replace with the following:

"The Contractor shall number each submittal consecutively: When resubmitting a "Revise and Resubmit" or "Rejected" submittal, the Contractor shall label the transmittal with the original submittal number followed by a letter to designate the additional submission. All submittals shall be numbered conforming to the following examples:"

In column B of line 001, line 001a, and line 001b of the table in subsection 1, replace "07511" with "075110."

Add the following to the end of the first paragraph of subsection 2:

"The Department reserves the right to return partial submittals unreviewed to the Contractor."

Revise the third paragraph of subsection 2 to read:

"The Contractor shall allow at least 60 calendar days for review of any submittal requiring approval by FAA, FTA, any railroad, DEP, U.S. Coast Guard, Army Corps of Engineers, or any other outside agency."

Delete the third and fourth paragraphs of subsection 3 and replace with the following:

"The Designer will not review submittals and the Engineer will not process payment estimates until the initial submittal schedule has been provided. Any delays in construction due to the Contractor's failure to provide a submittal schedule shall be the responsibility of the Contractor.

The Contractor must update its submittal schedule at least once a month, and distribute and post each updated schedule in the manner described above. The Engineer reserves the right not to process payment estimates without a recently updated submittal schedule on file."

Replace the first sentence of the first paragraph of subsection 4 with the following:

"Shop Drawings consist of fabrication and installation drawings, roughing-in and setting drawings, schedules, patterns, templates and similar drawings, and wiring diagrams showing field-installed wiring, including power, signal, and control wiring."

Replace the second paragraph of subsection 4 with the following:

"Shop drawings shall include the following information: Contract number, Project description, number and title of the drawing, date of drawing, revision number, name of Contractor and subcontractor submitting drawings, dimensions, identification of products, shopwork manufacturing instructions, design calculations, statement of compliance with Contractual standards, notation of dimensions established by field measurement, relationship to adjoining construction clearly indicated, seal and signature of a professional engineer if specified, and any other information required by individual Contract provisions."

Replace the first sentence of the first paragraph of subsection 5 with the following:

"Product data consist of printed information such as manufacturer's product specifications, manufacturer's installation instructions, manufacturer's catalog cuts, standard color charts, wiring diagrams showing factory-installed wiring, printed performance curves, operational range diagrams, and mill reports."

Replace the first sentence of the first paragraph of subsection 7 with the following:

"Quality assurance submittals consist of qualification data, design data, certifications, manufacturer's instructions, manufacturer's field reports, test reports, Material Safety Data Sheets (MSDSs), and other quality assurance information required by individual Contract provisions."

1.20-1.05.04—Coordination of Special Provisions, Plans, Supplemental Specifications and Standard Specifications and Other Contract Requirements:

Delete the first and second paragraphs and replace with the following:

"Industry Standards: Each entity engaged in construction of the Contract shall be familiar with industry standards applicable to that entity's construction activities. If printed standards have been established by organizations referenced in Article 1.01.02 or in the Contract, the Contractor shall obtain copies of said standards directly from the publication source.

Unless the Special Provisions include more stringent requirements, applicable construction industry standards have the same force and effect as if bound or copied directly into the Special Provisions to the extent referenced. Such standards are made a part of the Contract by reference."

Add the following article:

1.20-1.05.08—Schedules and Reports:

Daily Construction Reports: The Contractor shall assist the Engineer in the preparation of a daily construction report, by ensuring that each of the Contractor's employees and subcontractors working on the Project site on a given day signs the Engineer's sign-in sheet for that day; and by keeping and providing to the Engineer its own daily list of employees and subcontractors who worked on the Project site on that day.

Add the following article:

1.20-1.05.23—Requests for Information (RFIs):

The Contractor shall forward all RFIs to the Engineer in writing (facsimile or other electronic document) for review. The Engineer will forward the RFI to the Designer for review. Upon receipt of an RFI, the Designer will attempt to determine if additional information is required from the Contractor to respond to the RFI, and request said information from the Engineer.

All other RFIs will be responded to within 10 calendar days of receipt by the Designer.

1.20-1.05.24--Project Meetings:

Delete the third paragraph under subsection 1.

Delete the second paragraph under subsection 2 and replace with the following:

"The meeting participants shall review progress of other construction activities and preparations for the particular activity under consideration, including requirements of Contract documents, related requests for interpretations, related construction orders, purchases, deliveries, submittals, review of mockups, possible conflicts, compatibility problems, time schedules, weather limitations, manufacturer's written recommendations, warranty requirements, compatibility of materials, acceptability of substrates, temporary facilities and controls, space and access limitations, regulations of authorities having jurisdiction, testing and inspecting requirements, installation procedures coordination with other work, required performance results, protection of adjacent work, and protection of construction and personnel."

Delete the second, third and fourth paragraph under subsection 3 and replace with the following:

"The Contractor shall provide the Engineer with a detailed agenda for the proposed

meeting, specifying what topics will be covered. In addition to representatives of the Engineer, each subcontractor, supplier or other entity concerned with current progress or involved in planning, coordination or performance of future activities shall attend these meetings. All participants at the meeting shall be familiar with the Project and authorized to conclude matters relating to the Project.

At each progress meeting, the participants shall (1) review items of significance that could affect progress; (2) discuss topics appropriate to the current status of the Project; (3) review progress since the last meeting; (4) determine whether each activity is on time, ahead of schedule, or behind schedule, in relation to the Contractor's Construction Schedule; (5) determine how to expedite any Project work that may be behind schedule; (6) discuss whether or not schedule revisions are required to ensure that current and subsequent activities will be completed within the Contract time; and (7) review the present and future needs of each entity represented at the meeting, including such items as interface requirements, time, sequences, deliveries, off-site fabrication problems, access, site utilization, temporary facilities and controls, hours of work, hazards and risks, housekeeping, quality and work standards, status of correction of deficient items, field observations, requests for interpretations, status of proposal requests, pending changes, status of construction orders, and documentation of information for payment requests. The Engineer will distribute copies of minutes of the meeting to the Designer and the Contractor. The Contractor shall distribute copies to parties who were or should have been at the meeting."

*Delete article **1.20-1.05.25—Schedules and Reports** in its entirety*

1.20-1.06.08 - Warranties:

Delete the eighth and ninth paragraph and replace with the following:

"The Contractor shall:

(a) Bind warranties in heavy-duty, commercial-quality, durable 3-ring vinyl-covered loose-leaf binders, thick enough to accommodate the contents, and sized to receive 8 1/2-inch x 11-inch paper (216-millimeter x 279-millimeter) paper.

(b) Identify the binder's contents on the binder's front and spine with the typed or printed title "WARRANTIES," the Project title or name, and the name of the Contractor.

(c) Provide a heavy paper divider with a tab for each separate warranty.

(d) Mark the tab to identify the related product or installation.

(e) Provide a typed description of the product or installation, including the name of the product, and the name, address and telephone number of the Contractor or pertinent subcontractor.

(f) Furnish to the Department a written warranty for all Project work accompanied by a cover letter with the following contents:

[Addressed to:]

Commissioner of Transportation
Department of Transportation
P.O. Box 317546
Newington, Connecticut 06131-7546

Project Title and Number

[We] hereby warrant all materials and workmanship for all work performed under this Contract for a period of one (1) year from [date of issuance of C.O.C.] against failures of workmanship and materials in accordance with the Contract. Furthermore, as a condition of this warranty, [we] agree to have in place all insurance coverage identified in the Contract for the performance of any warranty work.

[Signature:] [Name of authorized signatory]
[Title]

(g) Submit to the Engineer, upon completion of installation of materials or assemblies that are required to have either a flame-rating or a fire-endurance hourly rating, a detailed letter certifying that the required rating has been attained.

Upon determination by the Engineer that Project work covered by a warranty has failed, the Contractor shall replace or rebuild the work to an acceptable condition complying with Contract requirements. The Contractor is responsible for the cost of replacing or rebuilding defective construction or components and those which may have needed to be damaged or removed in order to cure the defective work including costs of material, equipment, labor, and material disposal, regardless of whether or not the State has benefited from use of the work through a portion of its anticipated useful service life. The Contractor shall respond to the Project Site when Project work covered by a warranty has failed within 3 calendar days, unless in the Engineer's opinion said failure is deemed to be an emergency, in which case the Contractor shall respond to the Project Site as directed by the Engineer."

1.20-1.08.03—Prosecution of Work:

Under subsection '3. Cutting and Patching,' delete the heading 'B. Protection of Structural Elements' and replace with the following:

"**B. Protection:**"

Move the existing first and second paragraphs to under the following subparagraph:

"1. Structural Elements:"

Add the following after the first paragraph under B:

"2. Operational Elements: The Contractor shall not cut and patch operating elements and related components in a manner that results in their reducing their capacity to perform as intended or that results in increased maintenance or decreased operational life or safety.

3. Miscellaneous Elements: The Contractor shall not cut and patch miscellaneous elements or related components in a manner that could change their load-carrying capacity, that results reducing their capacity to perform as intended, or that results in increased maintenance or decreased operational life or safety."

Add the following after subsection 3:

"4. Selective Demolition:

A. Definitions:

Remove: The Contractor shall detach materials from existing construction and legally dispose or recycle them off-site, unless indicated to be removed and salvaged or removed and reinstalled. Except for materials indicated to be reused, salvaged,

reinstalled, or otherwise indicated to remain Engineer's property, demolished materials shall become Contractor's property and shall be removed from the Project Site.

Remove and Salvage: The Contractor shall detach materials from existing construction and deliver them to Engineer. The Engineer reserves the right to identify other materials for salvage during the course of demolition.

Remove and Reinstall: The Contractor shall detach materials from existing construction, prepare them for reuse, and reinstall them where indicated.

Existing to Remain: Existing materials of construction that are not to be removed and that are not otherwise indicated to be removed, removed and salvaged, or removed and reinstalled.

B. Approval Process:

The Contractor shall submit pre-demolition photographs to the Engineer prior to the commencement of Project work to show existing conditions of adjoining construction and site improvements, including finish surfaces, that might be misconstrued as damage caused by selective demolition operations.

Well in advance of performing any selective demolition on the Project, the Contractor shall submit to the Engineer a proposal describing the procedures that the Contractor intends to use for same.

The Contractor shall include the following information, as applicable, in its proposal: (1) detailed sequence of selective demolition and removal work with starting and ending dates for each activity while ensuring that the Engineer's on-site operations are not disrupted; (2) interruption of utility services; (3) coordination for shutoff, capping, and continuation of utility services; (4) use of elevators and stairs; (5) locations of temporary partitions and means of egress; (6) coordination of Engineer's continuing occupancy of

portions of existing building and of Engineer's partial occupancy of completed Project work; and (7) means of protection for items to remain and items in path of waste removal from building.

The Contractor shall comply with (1) governing EPA notification regulations before beginning selective demolition; (2) hauling and disposal regulations of authorities having jurisdiction; (3) ANSI A10.6; and (4) NFPA 241.

The Engineer will conduct a Pre-Demolition Meeting at the Project site in accordance with Article 1.20-1.05.24. Said meeting will review the methods and procedures related to selective demolition including, but not limited to, the following: (1) an inspection and discussion of the condition of construction to be selectively demolished; (2) a review of the structural load limitations of the existing structure; (3) a review and finalization of the

selective demolition schedule and a verification of the availability of materials, demolition personnel, equipment, and facilities needed to make progress and avoid delays; (4) a review of requirements of Project work performed by other trades that rely on substrates exposed by selective demolition operations; and (5) a review of areas where existing construction is to remain and requires protection.

C. Repair Materials:

The Contractor shall comply with Article 1.20-1.08.03 subsection 3E for repair materials and shall comply with material and installation requirements specified in other Contract provisions.

D. Examination:

The Contractor shall (1) verify that utilities have been disconnected and capped; (2) survey existing conditions and correlate with requirements indicated to determine extent of selective demolition required; (3) inventory and record the condition of items to be removed and reinstalled and items to be removed and salvaged; (4) investigate and measure the nature and extent of unanticipated mechanical, electrical, or structural elements that conflict with intended function or design and submit a written report to

Engineer; and (5) perform surveys as the Project work progresses to detect hazards resulting from selective demolition activities.

E. Utility Services:

The Contractor shall (1) maintain existing utility services indicated to remain and protect them against damage during selective demolition operations; (2) not interrupt existing utilities serving occupied or operating facilities unless authorized in writing by the Engineer; (3) provide temporary services during interruptions to existing utilities, as acceptable to Engineer; (4) provide at least 3 calendar days notice to the Engineer if shutdown of service is required during changeover; and (5) locate, identify, disconnect,

and seal or cap off indicated utilities serving areas to be selectively demolished. The Contractor shall arrange to shut off indicated utilities with utility companies. If utility services are required to be removed, relocated, or abandoned, before proceeding with selective demolition the Contractor shall provide temporary utilities that bypass area of selective demolition and that maintain continuity of service to other parts of building. The Contractor shall cut off pipe or conduit in walls or partitions
to be removed and shall cap, valve, or plug and seal remaining portion of pipe or conduit after bypassing.

The Contractor shall refer to other Contract provisions for shutting off, disconnecting, removing, and sealing or capping utilities. The Contractor shall not start selective demolition work until utility disconnecting and sealing have been completed and verified by the Engineer in writing.

F. Preparation:

The Contractor shall conduct selective demolition and debris-removal operations to ensure minimum interference with adjacent occupied and used facilities on the Project site. The Contractor shall not disrupt the Owner's operations without the Engineer's permission. The Contractor shall protect existing site improvements, appurtenances, and landscaping to remain.

The Contractor shall provide temporary barricades and other protection required to prevent injury to people and damage to adjacent buildings and facilities to remain. The Contractor shall provide temporary weather protection, during interval between selective demolition of existing construction on exterior surfaces and new construction, to prevent water leakage and damage to structure and interior areas. The Contractor shall protect walls, ceilings, floors, and other existing finish work that are to remain or that are
exposed during selective demolition operations. The Contractor shall cover and protect furniture, furnishings, and equipment that have not been removed.

The Contractor shall provide temporary enclosures for protection of existing building

and construction, in progress and completed, from exposure, foul weather, other construction operations, and similar activities. The Contractor shall provide temporary weathertight enclosure for building exterior. Where heating is needed and permanent enclosure is not complete, the Contractor shall provide insulated temporary enclosures and shall coordinate enclosure with ventilating and material drying or curing requirements to avoid dangerous conditions and effects.

The Contractor shall erect and maintain dustproof partitions and temporary enclosures to limit dust and dirt migration and to separate areas from fumes and noise.

The Contractor shall provide and maintain interior and exterior shoring, bracing, or structural support to preserve stability and prevent movement, settlement, or collapse of construction to remain, and to prevent unexpected or uncontrolled movement or collapse of construction being demolished. The Contractor shall strengthen or add new supports when required during progress of selective demolition.

G. Pollution Controls:

The Contractor shall comply with governing regulations pertaining to environmental protection.

The Contractor shall not use water when it may create a hazardous or objectionable condition such as ice, flooding, or pollution.

The Contractor shall remove and transport debris in a manner that will prevent spillage on adjacent surfaces and areas. The Contractor shall remove debris from elevated portions of building by chute, hoist, or other device that will convey debris to grade level in a controlled descent.

The Contractor shall clean adjacent structures and improvements of dust, dirt, and debris caused by selective demolition operations. The Contractor shall return adjacent areas to condition existing before selective demolition operations began.

H. Performance:

The Contractor shall not use explosives for demolition purposes.

The Contractor shall demolish and remove existing construction only to the extent required by new construction and as indicated. The Contractor shall (1) proceed with selective demolition systematically; (2) neatly cut openings and holes plumb, square, and true to dimensions required; (3) use cutting methods least likely to damage

remaining or adjoining construction; (4) use hand tools or small power tools designed for sawing or grinding, not hammering and chopping, to minimize disturbance of adjacent surfaces; (5) temporarily cover openings to remain; (6) cut or drill from the

exposed or finished side into concealed surfaces to avoid marring existing finished surfaces; (7) not use cutting torches until work area is cleared of flammable materials; (8) verify condition and contents of concealed spaces such as duct and pipe interiors before starting flame-cutting operations; (9) maintain fire watch and portable fire-suppression devices during flame-cutting operations; (10) maintain adequate ventilation when using cutting torches; (11) remove decayed, vermin-infested, or otherwise dangerous or unsuitable materials and promptly dispose of off-site; (12) remove structural framing members and lower to ground by method suitable to avoid free fall and to prevent ground impact or dust generation; (13) locate selective demolition equipment and remove debris and materials so as not to impose excessive loads on supporting walls, floors, or framing; and (14) dispose of demolished items and materials promptly.

The Contractor shall comply with the Engineer's requirements for using and protecting walkways, building entries, and other building facilities during selective demolition operations.

The Contractor shall demolish and remove foundations and other below grade structures completely unless otherwise indicated on the plans. The Contractor shall fill below grade areas and voids resulting from demolition of structures with granular fill materials. Prior to placement of fill materials, the Contractor shall ensure that the areas to be filled are free of standing water, frost, frozen material, trash, and debris. After fill placement and compaction, grade surface to meet adjacent contours and provide flow

to surface drainage structures. Backfilling and grading related to demolition is included in the Major Lump Sum Item (MLSI) for the Project. There will be no separate payment for this backfilling and grading.

The Contractor shall (1) demolish concrete in sections; (2) cut concrete at junctures with construction to remain to the depth shown on the Contract plans and at regular intervals using power-driven saw; and (3) remove concrete between saw cuts.

The Contractor shall (1) demolish masonry in small sections; (2) cut masonry at junctures with construction to remain using power-driven saw; and (3) remove masonry between saw cuts.

The Contractor shall (1) saw-cut perimeter of concrete slabs-on-grade to be demolished as shown on the Contract plans; and (2) break up and remove concrete slabs-on-grade.

The Contractor shall (1) remove floor coverings and adhesive according to recommendations in RFCI-WP and its Addendum; and (2) remove residual adhesive and prepare substrate for new floor coverings by one of the methods recommended by RFCI.

The Contractor shall (1) only remove existing roofing in one day to the extent that it can

be covered by new roofing; and (2) refer to other Contract provisions for new roofing requirements.

The Contractor shall remove air conditioning equipment without releasing refrigerants.

I. Reuse of Building Elements:

The Contractor shall not demolish building elements beyond what is indicated on the plans without the Engineer's approval.

J. Removed and Salvaged Materials:

Unless otherwise directed by the Engineer, the Contractor shall (1) store materials in a secure area until delivery to the owner; (2) transport materials to the owner's storage area off-site; and (3) protect materials from damage during transport and storage.

K. Removed and Reinstalled Materials:

Unless otherwise directed by the Engineer, the Contractor shall (1) clean and repair materials to functional condition adequate for intended reuse; (2) paint equipment to match the color of new equipment; (3) protect materials from damage during transport and storage; and (4) reinstall items in locations indicated complying with installation requirements for new materials and equipment and providing connections, supports, and miscellaneous materials necessary to make item functional for use indicated.

L. Existing Materials to Remain:

The Contractor shall protect construction indicated to remain against damage and soiling during selective demolition.

The Contractor shall drain piping and cap or plug piping with the same or a compatible piping material for piping to be abandoned in place.

The Contractor shall cap or plug ducts with the same or a compatible ductwork material for ducts to be abandoned in place.

The Contractor shall cut and remove concealed conduits and wiring to be abandoned in place 2-inches (50-mm) below the surface of the adjacent construction, cap the conduit end, and patch the surface to match the existing finish. The Contractor shall cut existing conduits installed in concrete slabs to be abandoned in place flush with the top of the slab and fill conduit end with a minimum of 4-inches (100-mm) of concrete.

M. Patching and Repairing:

The Contractor shall comply with Article 1.20-1.08.03 subsection 3H for patching and

repairing damage to adjacent construction caused by selective demolition operations.

N. Disposal of Demolished Materials:

The Contractor shall (1) not allow demolished materials to accumulate or be sold on the Project Site; (2) not burn demolished materials on the Project Site; and (3) promptly and legally dispose or recycle demolished materials off the Project Site."

1.20-1.08.05--Personnel and Equipment:

Replace "FM with "FMG" in subsection (a)

Add the following article:

"**1.20-1.08.12--Semi-Final and Final Inspections:**

1. Semi-Final Inspection: Before requesting the Semi-Final Inspection, the Contractor shall show 100% completion for all Project work claimed as complete. The Contractor shall submit final test/adjust/balance records including the final air and water balance report. For all incomplete Project work, the Contractor shall prepare its own "Punch List" of the incomplete items and reasons the work is not complete. The Contractor shall submit final test/adjust/balance records including the final air and water balance report.

On receipt of a Contractor request for inspection, the Engineer will proceed with inspection or notify the Contractor of unfulfilled requirements. The Engineer will prepare a "Punch List" of unfilled, substandard, or incomplete items. During this inspection, the Contractor shall have all technicians necessary to demonstrate the complete operation of all systems on-site. Examples of such systems include, but are not limited to, the following: boiler, HVAC, fire alarm, and building automation. The Engineer will advise the Contractor of the construction that must be completed or corrected before the issuance of the C.O.C. Results of the completed inspection will form the basis of requirements for the Final Inspection. The Engineer reserves the right to issue the C.O.C. after the Semi-Final Inspection if there are no Building Code or Fire Code compliance issues or any major "Punch List" items.

2. Final Inspection: Before requesting Final Inspection for issuance of the C.O.C., the Contractor shall: (1) submit specific warranties, maintenance service agreements, final certifications and similar documents; (2) submit Record Drawings, Record Specifications, operations and maintenance manuals, final project photographs, property surveys, and similar final record information; (3) deliver spare parts; (4) make final changeover of permanent locks and deliver the keys to the Engineer; (5) complete start-up testing of systems; (6) train the owner's operation and maintenance personnel; (7) discontinue or change over and remove temporary facilities from the Project Site, along with construction tools, mock-ups, and similar elements; (8) complete final

cleaning requirements, including touch-up painting; (9) touch-up and otherwise repair and restore marred exposed finishes to eliminate visual defects; (10) submit a certified copy of the Engineer's “Punch List” of items to be completed or corrected, stating that each item has been completed or otherwise resolved for acceptance, and the list has been endorsed and dated by the Engineer; (11) submit final meter readings for utilities, a measured record of stored fuel, and similar data as of the date of Final Inspection, or when the Engineer took possession of and responsibility for corresponding elements of the Project work; and (12) install permanent electrical service. The Contractor shall

install permanent electrical service prior to Semi-Final Inspection if requested by the Engineer, or if necessary for the Engineer or Contractor to perform testing of building and other related systems and equipment to certify acceptance and completion of Project work. The Contractor shall submit all outstanding items or unacceptable submissions from the Semi-Final Inspection, or other outstanding items required for submittal, prior to the Final Inspection.

On receipt of a Contractor request for inspection, the Engineer will proceed with inspection and notify the Contractor of unfulfilled requirements.”

1.20 – 1.08.13 – Termination of the Contractor’s Responsibility:

Add subsection 3 as follows:

“**3. Insurance Coverage:** The Contractor shall have in place all insurance coverage identified in Article 1.03.07 for the performance of any warranty work.”

1.20-1.08.14--Acceptance of Project:

Add the following to subsection 2 under the heading “Equipment and Systems Maintenance Manual:”

“(j) Copies of maintenance agreements with service agent name and telephone number.”

Add the following paragraph in subsection 3 after the second paragraph:

“The Contractor shall provide a syllabus prior to the training to ensure that the appropriate owner’s operation and maintenance personnel are in attendance.”

Delete the last paragraph and replace with the following:

The Contractor shall submit to the Engineer for approval, a qualified commercial videographer to videotape the training sessions. The videographer shall be a firm or an individual of established reputation that has been regularly engaged as a professional videographer for not less than 3 years.

The Contractor shall video record each training session and provide said video in DVD format to the Engineer for the owner's future use."

Add the following section:

"1.20-1.09.06—Partial Payments:

With each payment request under the MLSI, the Contractor shall submit AIA Form G702 (Application and Certificate of Payment) and Form G703 (Continuation Sheet). The Contractor is not required to obtain the Architect's signature on Form G702. Once approved by the Engineer, the Forms G702 and G703 become the basis of payment under the MLSI."

Add the following section:

"1.20-9.75.04—Method of Measurement:

Mobilization as defined in Article 1.20-1.03.01 will be paid in the manner described hereinafter; however, the determination of the total contract price earned shall not include the amount of mobilization earned during the period covered by the current monthly estimate – but shall include amounts previously earned and certified for payment:

1. When the first payment estimate is made, 25 percent of the "Mobilization" line item will be certified for payment.

2. When the Baseline Schedule, as specified under Section 1.05.08, is accepted, 50 percent of the "Mobilization" line item, minus any previous payments, will be certified for payment.

3. When 10 percent of the total original contract price is earned and the Baseline Schedule, as specified under Section 1.05.08, is accepted, 75 percent of the "Mobilization" line item, minus any previous payments, will be certified for payment.

4. When 30 percent of the total original contract price is earned and the Baseline Schedule, as specified under Section 1.05.08, is accepted, 100 percent of the "Mobilization" line item, minus any previous payments, will be certified for payment."

CONNECTICUT
SUPPLEMENTAL SPECIFICATION
SECTION 2.02
ROADWAY EXCAVATION, FORMATION OF EMBANKMENT AND DISPOSAL OF SURPLUS MATERIAL

2.02.04 – Method of Measurement:

Second to last Paragraph - replace the last sentence with the following:

"Bituminous parking areas are considered as bituminous concrete pavement."

CONNECTICUT
SUPPLEMENTAL SPECIFICATION
SECTION 2.05
TRENCH EXCAVATION

2.05.01--Description:

Paragraph 2 - Delete the only sentence and replace with the following:

2) The removal of stormwater drainage structures, stormwater pipes and appurtenances beyond the limits of the roadway and structure excavation.

Sub article 2 - Rock in Trench - Delete the only sentence and replace with the following:

(2) Rock, insofar as it applies to trench excavation, shall be defined as rock in definite ledge formation, boulders, or portions of boulders, cement masonry structures, concrete structures, reinforced concrete pipe, Portland cement concrete pavement or base, of 1/2 cubic yard (0.5 cubic meters) or more in volume, removed as indicated or directed from within the payment lines for trench excavation.

2.05.05 -Basis of Payment

Paragraph 13 - Delete the entire sentence “There will be no direct payment for the plugging of existing pipes....." and replace with the following:

There will be no direct Payment for the plugging of existing pipes, removal and disposal of metal or plastic pipes or for the breaking up of floors in drainage structures being abandoned. The cost shall be included in the contract unit prices of the drainage and excavation items.

CONNECTICUT
SUPPLEMENTAL SPECIFICATION
SECTION 2.12
SUBBASE

2.12.02 – Materials:

Delete the second sentence:

"Grading 'B' shall be used."

CONNECTICUT
SUPPLEMENTAL SPECIFICATION
SECTION 3.04
PROCESSED AGGREGATE BASE

Delete the entire Section and replace with the following:

3.04.01--Description: The base shall consist of a foundation constructed on the prepared subbase or subgrade in accordance with these specifications and in conformity with the lines, grades, compacted thickness and typical cross-section as shown on the plans.

3.04.02--Materials: All materials for this work shall conform to the requirements of Article M.05.01.

3.04.03--Construction Methods: Only one type of coarse aggregate shall be used on a project unless otherwise permitted by the Engineer.

Prior to placing the processed aggregate base, the prepared subbase or subgrade shall be maintained true to line and grade, for a minimum distance of 200 feet (60 meters) in advance of the work. None of the aggregate courses shall be placed more than 500 feet (150 meters) ahead of the compaction and binding operation on that particular course.

The processed aggregate base shall be spread uniformly by a method approved by the Engineer. The thickness of each course shall not be more than 4 inches (100 millimeters) after compaction, unless otherwise ordered.

After the aggregate is spread, it shall be thoroughly compacted and bound by use of equipment specifically manufactured for that purpose. Rollers shall deliver a ground pressure of not less than 300 pounds per lineal inch (52.5 newtons/millimeter) of contact width and shall have a weight (mass) not less than 10 tons (9100 kilograms). Vibratory units shall have a static weight (mass) of not less than 4 tons (3650 kilograms). Water may be used during the compaction and binding operation and shall be applied from an approved watering device. The compacting and binding operation shall begin at the outside edges, overlapping the shoulders for a distance of not less than 6 inches (150 millimeters) and progress towards the middle, parallel with the centerline of the pavement. The work shall cover the entire surface of the course with uniform overlapping of each preceding track or pass. Areas of super-elevation and special cross slope shall be compacted by beginning at the lowest edge and proceeding towards the higher edge, unless otherwise directed by the Engineer. The compacting and binding operation shall be continued until the voids in the aggregates have been reduced to provide a firm and uniform surface satisfactory to the Engineer. The amount of compactive effort shall in no case shall be less than four (4) complete passes of the compacting and binding operations. All aggregate shall be completely compacted and bound at the end of each day's work or when traffic is to be permitted to operate on the

road. The dry density of each layer of processed aggregate base after compaction shall not be less than 95 percent of the dry density for that material when tested in accordance with AASHTO T180, Method D.

Should the subbase or subgrade material become churned up or mixed with the processed aggregate base at any time, the Contractor shall, without additional compensation remove the mixture. The Contractor shall add new subbase material, if required, and reshape and recompact the subbase in accordance with the requirements of Article 2.12.03. New aggregate material shall be added, compacted and bound, as hereinbefore specified, to match the surrounding surface.

Any surface irregularities which develop during, or after work on each course, shall be corrected by loosening material already in place and removing or adding aggregate as required. The entire area, including the surrounding surface, shall be re-compacted and rebound until it is brought to a firm and uniform surface satisfactory to the Engineer.

3.04.04--Method of Measurement: Processed Aggregate Base will be measured horizontally in–place after final grading and compaction. Materials placed beyond the horizontal limits indicated on the plans will not be measured for payment.

The total thickness shall be as indicated on the plans, or as ordered by the Engineer and within a tolerance of minus three-fourths of an inch (-$^{3}/_{4}$") to plus one-half inch (+ $^{1}/_{2}$") (-19 millimeters to +13 millimeters).

Measurements to determine the thickness will be taken by the Engineer at intervals of 500 feet (150 meters) or less, along lanes, and shall be considered representative of the lane. For the purpose of these measurements, a shoulder will be considered a lane.

If a thickness measurement is taken and found deficient, the Engineer will take such additional measurements as he considers necessary to determine the longitudinal limits of the deficiency. Areas not within allowable tolerances shall be corrected, as ordered by the Engineer, without additional compensation to the Contractor.

3.04.05--Basis of Payment: This work will be paid for at the contract unit price per cubic yard for "Processed Aggregate Base", complete in place, which price shall include all materials, tools, equipment and work incidental thereto.

Pay Item	Pay Unit
Processed Aggregate Base	c.y. (cu. m)

CONNECTICUT
SUPPLEMENTAL SPECIFICATION
SECTION 4.01
CONCRETE PAVEMENT

Article 4.01.03-A. Composition:

Add the following new paragraph before the last paragraph:

"The temperature of the concrete at the time of placement shall not be less than 60˚ F (15.5˚ C) or greater than 90˚ F (32˚ C). For pumped concrete, the temperature shall be determined at the placement end of the pump line. The temperature of the concrete shall be determined in accordance with ASTM C1064."

CONNECTICUT
SUPPLEMENTAL SPECIFICATION
SECTION 5.14
PRESTRESSED CONCRETE MEMBERS

Article 5.14.03 – Construction Methods:

Change the last sentence of 5.14.03-16 – Methods and Equipment to read:

"The results of this investigation, including computations, shall be submitted to the Engineer."

CONNECTICUT
SUPPLEMENTAL SPECIFICATION
SECTION 6.01
CONCRETE FOR STRUCTURES

Article 6.01.02 – Materials:

Add the following:

Material for stay-in-place metal forms shall be made of zinc-coated (galvanized) steel sheet conforming to ASTM Specification A653, Structural Steel (SS) Grade 33 through 80 (ASTM Specification A653M, Structural Steel (SS) Grade 250 through 550). The minimum gage thickness shall be 20 gage. Coating weight shall conform to ASTM A924, Class G235 (ASTM A924M, Class Z700) and shall otherwise meet all requirements relevant to steel stay-in-place metal forms and the placing of concrete as specified herein and as noted on the contract drawings.

Material for the form supports shall be fabricated from the same material and conform to the same material requirements as the forms themselves or they shall be fabricated from structural steel conforming to the requirements of ASTM A36 (ASTM A36M) which shall be hot-dip galvanized in accordance with ASTM A123 (ASTM A123M).

Lightweight filler material shall be as recommended by the form's manufacturer.

Subarticle 6.01.03 – 3, Forms:

Add the following:

Stay-in-Place Metal Form System:

Stay-in-place metal forms shall have a minimum depth of form valley equal to two inches (50 millimeters). The forms shall have closed tapered ends. Lightweight filler material shall be used in the form valleys.

The metal forms shall be designed on the basis of dead load of the form, reinforcement and the plastic concrete, including the additional weight of concrete due to the deflection of the metal forms, plus 50 pounds per square foot (2.40 kilopascals) for construction loads. The allowable stress in the corrugated form and the accessories shall not be greater than 0.725 times the yield strength of the furnished material and the allowable stress shall not exceed 36,000 psi (250 megapascal). The span for design and deflection shall be the clear distance between edges of the beams or girders less two inches (50 millimeters) and shall be measured parallel to the form flutes. Maximum deflection of the forms under the weight of the plastic concrete, reinforcement, and forms shall not exceed 1/180 of the form span or 0.5 inches (13 millimeters), whichever is less. The permissible form camber shall be based on the actual dead load condition. Camber shall not be used to compensate for deflection in excess of the foregoing limits.

Form support angles shall be designed as a cantilever. The horizontal leg of the form's support angle shall not be greater than 3 inches (75 millimeters).

Before fabricating any material, the Contractor shall submit working drawings to the Engineer for review in accordance with Article 1.05.02-2, Working Drawings. These drawings shall include the proposed method of form construction, erection plans including weld procedure(s), material lists, material designation, gage of all materials, and the details of corrugation. Also, copies of the form design computations shall be submitted with the working drawings.

Form supports shall be used and no stay-in-place metal forms shall be placed over or be directly supported by the top flanges of beams or girders. The form supports may be supported by or be attached to the top flanges. Stay-in-place metal forms shall not be used in bays where longitudinal slab construction joints are located. Stay-in-place metal forms shall not be used under cantilevered slabs such as the overhang outside of fascia members.

Welding to the top flanges of steel beams and girders is not allowed in the areas where the top flanges are in tension, or as indicated on the plans. Alternate installation procedures shall be submitted addressing this condition.

Drilling of holes in prestressed concrete beams or the use of power-actuated tools on the prestressed concrete beams for fastening of the form supports to the prestressed concrete beams will not be permitted. No welding will be permitted on the reinforcing steel in the prestressed units.

All edges of openings cut for drains, pipes, and similar appurtenances shall be independently supported around the entire periphery of the opening.

All fabricated stay-in-place metal forms shall be unloaded, stored, and handled in such a manner as to preclude damage to the forms. Damaged material shall be replaced at no additional cost. Any exposed form or form support metal where the galvanized coating has been damaged, shall be thoroughly cleaned, wire brushed, then coated with two coats of a zinc dust-zinc oxide primer, FS No. TT-P-641d, Type II, as directed by the Engineer.

All fabricated stay-in-place metal forms shall be stored at the project site at least four inches (100 millimeters) above the ground on platforms, skids or other suitable supports and shall be protected against corrosion and damage.

Forms shall be installed from the topside in accordance with the manufacturer's placing plans, recommended details, and printed instructions. Forms shall be constructed to the lines, grades, shapes, and dimensions shown on the plans, unless otherwise directed by the Engineer. Form supports shall ensure that forms retain their correct dimensions and positions during use at all times. Form supports shall provide vertical adjustment to maintain design slab thickness at the crest of corrugation, to compensate for variations in camber of beams and girders, and to allow for deflections.

Field cutting of form sheet metal shall be made by a steel cutting saw. Supports, closures and cut-outs shall be cut with shears or saw. No flame cutting will be permitted.

All welding shall be accomplished by Connecticut certified welders in accordance with Subarticle 6.03.03 – 6, Welding.

The steel form supports shall be placed in direct contact with the flange of stringer or floor beam flanges and attached by bolts, clips, welding where permitted, or other approved means. Form sheets shall not be permitted to rest directly on the top of the stringer or floor beam flanges. Forms shall be securely fastened to form supports with self-drilling fasteners and shall have a minimum bearing length of one inch (25 millimeters) at each end.

In the areas where the form sheets lap, the form sheets shall be securely fastened to one another by fasteners at a maximum spacing of eighteen inches (450 millimeters). The ends of the form sheets shall be securely attached to the support angles with fasteners at a maximum spacing of eighteen inches (450 millimeters) or two corrugation widths, whichever is less. Welding of forms to supports is not allowed.

The depth of the concrete slab shall be as shown on the plans and the corrugated forms shall be placed so that the top of the corrugation will coincide with the bottom of the deck slab. No part of the forms or their supports shall protrude into the slab. All reinforcement in the bottom reinforcement mat shall have a minimum concrete cover of one inch (25 millimeters) unless noted otherwise on the plans.

The completed stay-in-place metal form system shall be sufficiently tight to prevent leakage of mortar or concrete.

Where forms or their installation are unsatisfactory in the opinion of the Engineer, either before or during placement of the concrete, the Contractor shall correct the defects before proceeding with the construction work. The cost of such corrective work shall be at the sole expense of the Contractor.

There will be no direct payment for the cost of the forms and form supports, or any material, tools, equipment, or labor incidental thereto, but the cost shall be considered included in the contract unit price per cubic yard (cu. m) for “Class ‘F’ Concrete”.

<u>Article 6.01.03-8. Placing Concrete:</u>

Add the following new paragraph after the first paragraph:

“The temperature of the concrete at the time of placement shall not be less than 60˚ F (15.5˚ C) or greater than 90˚ F (32˚ C). For pumped concrete, the temperature shall be determined at the placement end of the pump line. The temperature of the concrete shall be determined in accordance with ASTM C1064.”

Subarticle 6.01.03 – 9, Concrete for Bridge Decks:

Add the following:

Screed and runway supports shall not be located on any stay-in-place metal form sheets, form supports or reinforcing steel.

Concrete shall not be placed on the forms to a depth greater than twelve inches (300 millimeters) above the top of the forms. Concrete shall not be dropped more than three feet (1 meter) above the top of the forms, beams or girders.

CONNECTICUT
SUPPLEMENTAL SPECIFICATION
SECTION 6.03
STRUCTURAL STEEL

Delete the entire section and replace it with the following:

SECTION 6.03
STRUCTURAL STEEL

Description: Work under this item shall consist of furnishing, fabricating, transporting, storing, handling and erecting of structural steel of the type and size designated, as shown on the plans, as directed by the Engineer and in accordance with these specifications.

All work except as stated in the following paragraph shall conform to the requirements of the AASHTO LRFD Bridge Construction Specifications and the ANSI/AASHTO/AWS D1.5 – Bridge Welding Code.

All work subject to railroad loading shall conform to AREMA and the ANSI/AASHTO/AWS D1.5 – Bridge Welding Code.

Materials: The materials for this work shall conform to the requirements of Section M.06.

Materials for this work shall be stored off the ground before, during, and after fabrication. It shall be kept free from dirt, grease and other contaminants and shall be reasonably protected from corrosion. In addition, weathering steel shall be stored as to allow free drainage and promote the development of the oxide coating and a uniform appearance.

Construction Methods:

1. Pre-qualification:

(a) Fabricators producing material for Department projects under this item are required to have as a minimum, an active AISC Certification for Simple Steel Bridges. For fabrication of material for use on bridges other than un-spliced rolled beam bridges, AISC Major Steel Bridge Certification is required. If so noted on the plans, additional AISC endorsement for fabrication of fracture critical members is also required.

(b) Field Welders: Prior to working on material for Department projects under this specification, all field welders, field welding operators, and field tackers must posses a valid welder certification card issued by the Department's Division of Materials Testing. If such person has not been engaged in welding operations on a Department project or

project acceptable to the Department within a period of six months, or if he cannot produce an approved welding certificate dated within the previous twelve months from a welding agency acceptable to the Engineer, he shall be required to re-qualify through examination. The Engineer may require re-qualification of anyone whose quality of work he questions.

2. Submittals:

(a) Shop Drawings: Prior to any fabrication, the Contractor shall submit shop drawings in accordance with Article 1.05.02-3 to the Engineer for review and approval. Shop drawings shall include a cambering procedure and diagram. In the case of trusses, the Contractor is responsible for calculation of the camber (lengthening and shortening) of all truss members.

(b) Shop Schedule: The Contractor shall submit a detailed shop fabrication schedule to the Engineer for review within 30 days of the notice to proceed unless otherwise agreed to by the Engineer. At a minimum the schedule shall include the start date, milestone dates, and completion date. Any significant changes shall be brought to the attention of the Engineer immediately.

(c) Welding Procedures: Prior to start of fabrication, all weld procedures shall be submitted to the Engineer for review and approval.

(d) Working Drawings for Falsework and Erection of Structural Steel: Prior to erecting any steel fabricated under this specification, the Contractor shall submit drawings and supporting calculations, including erection stresses, in accordance with Article1.05.02-2 to the Engineer. The design of temporary supports and falsework shall conform to the *AASHTO Specifications,* the *AASHTO Guide Design Specifications for Bridge Temporary Works* or any other standard acceptable to the Engineer. Falsework shall be of sufficient rigidity and strength to safely support all loads imposed and to produce in the finished structure the lines and grades indicated in the contract documents. The submittal shall include at a minimum:

- Title block with contract number, project identification number (PIN), town, and structure number and name.
- Plan of the work area showing support structures, roads, railroad tracks, Federal and State regulated areas as depicted on the plans, utilities or any other information relative to erection.
- A detailed narrative describing the erection sequence for main members and secondary members (cross frames, diaphragms, lateral bracing, portals, etc.), noting use of holding cranes or temporary supports, falsework, or bents.
- Delivery location of each girder.
- Location of each crane for each pick.
- Capacity chart for each crane and boom length used in the work.
- The capacity of the crane and of all lifting and connecting devices shall be adequate for the total pick load including spreaders and other materials. In the area of railroads and navigable waterways, the capacity shall be as required by Amtrak, Metro North, U.S. Coast Guard or other regulatory authorities. No picks shall be

allowed over vehicular or pedestrian traffic unless otherwise noted on the plans or permitted by the Engineer.

- Pick point location(s) on each member.
- Lifting weight of each member (including clamps, spreader beams, etc.)
- Lift and setting radius for each pick (or maximum lift radius).
- Description of lifting devices or other connecting equipment.
- Girder tie-down details or other method of stabilizing erected girders.
- Bolting requirements, including the minimum number of bolts and erection pins required to stabilize members during the erection sequence.
- Blocking details for stabilizing members supported on expansion bearings and on bearings that do not limit movement in the transverse direction.
- The method and location for temporary supports for field spliced or curved girders, including shoring, false work, holding cranes, guys, etc. The Engineer will review, but not approve details of temporary supports. The design, erection, and stability of these supports shall be the sole responsibility of the Contractor.
- Offsets necessary to adjust expansion bearings during erection to provide for temperature variance and dead load rotation.

The following notes shall be placed on the Erection Drawings:

- Cranes shall be operated in accordance with the Connecticut Department of Public Safety regulations.
- The Contractor shall be responsible for verifying the weight of each lift and for insuring the stability of each member during all phases of erection.
- Members shall be subject to only light drifting to align holes. Any drifting that results in distortion of the member or damage to the holes will be cause for rejection of the member.
- Field reaming of holes shall not be performed unless required by the Contract Drawing or approved by the Engineer.

The Contractor shall submit these documents to the Engineer at least 60 calendar days in advance of their proposed use. If the proposed method of erection requires additional members or modifications to the existing members of the structure, such additions and modifications shall be made by the Contractor at no expense to the State.

3. Shop Fabrication: Unless otherwise shown on the plans or indicated in the Special Provisions, Structural Steel shall be fabricated in accordance with the AASHTO LRFD Bridge Construction Specifications, amended as follows:

(a) Notification: The Contractor shall submit written notification to both the Engineer and the Director of Research and Materials Testing not less than 30 calendar days prior to start of fabrication. No material shall be manufactured or worked in the shop before the Engineer has been so notified. The notification shall include the name and location of the fabrication shop where the work will be done so that arrangements can be made for an audit of the facility and the assignment of a Department Quality Assurance inspector.

(b) Camber: All members shall be cambered prior to heat curving and painting. Rolled beams shall be heat cambered by methods approved by the Engineer. Plate girders shall be cambered by cutting the web to the prescribed shape with allowances for shrinkage due to cutting, welding, and heat curving. The fabricator is responsible to determine what allowances should be made. Rolled, plate-rolled, or fabricated sections shall be cambered to the total amount shown on the plans and within the camber deviation tolerances permitted for welded beams and girders, as indicated in the ANSI/AASHTO/AWS D1.5 Bridge Welding Code. The Contractor must submit to the Engineer for approval, a plan for corrective action if the actual camber is not within tolerance.

(c) Welding: Unless otherwise indicated on the plans or specifications, all work shall be performed in accordance with ANSI/AASHTO/AWS D1.5 – Bridge Welding Code.

(d) Preassembly of Field Connections: Field connections of main members of continuous beams, plate girders, bents, towers, rigid frames, trusses and arches shall be preassembled prior to erection as necessary to verify the geometry of the completed structure or unit and to verify or prepare field splices. The Contractor shall propose an appropriate method of preassembly for review and comment by the Engineer. The method and details of preassembly shall be consistent with the erection procedures shown on the working drawings and camber diagrams. As a minimum, the preassembly procedure shall consist of assembling three contiguous panels accurately adjusted for line and camber. Successive assemblies shall consist of at least one section or panel of the previous assembly plus two or more sections or panels added at the advancing end. In the case of structures longer than 150 feet (45 meters), each assembly shall not be less than 150 feet (45 meters) long regardless of the length of individual continuous panels or section. All falsework, tools, machinery and appliances, including drift pins and bolts necessary for the expeditious handling of the work shall be provided by the Contractor at no cost to the State.

(e) Inspection: The Contractor shall furnish facilities for the inspection of material and workmanship in the shop by the Engineer. The Engineer and his representative shall be allowed free access to the necessary parts of the premises.

The Engineer will provide Quality Assurance (QA) inspection at the fabrication shop to assure that all applicable Quality Control plans and inspections are adequately adhered to and maintained by the Contractor during all phases of the fabrication. A thorough inspection of a random selection of elements at the fabrication shop may serve as the basis of this assurance.

Prior to shipment to the project, each individual piece of structural steel shall be stamped or marked in a clear and permanent fashion by a representative of the fabricators' Quality Control (QC) Department to indicate complete final inspection by the fabricator and conformance to the project specifications for that piece. The stamp or mark must be dated. A Materials Certificate in accordance with Article 1.06.07 may be used in lieu of individual stamps or markings, for all material in a single shipment. The Materials Certificate must list each piece within the shipment and accompany the shipment to the project site.

Following the final inspection by the fabricator's QC personnel, the Engineer may select pieces of structural steel for re-inspection by the Department's QA inspector. Should non-conforming pieces be identified, all similar pieces must be re-inspected by the fabricator and repair procedure(s) submitted to the Engineer for approval. Repairs will be made at the Contractor's expense.

The pieces selected for re-inspection and found to be in conformance, or adequately repaired pieces, may be stamped or marked by the QA inspector. Such markings indicate the Engineer takes no exception to the pieces being sent to the project site. Such marking does not indicate acceptance or approval of the material by the Engineer.

Following delivery to the project site, the Engineer will perform a visual inspection of all material to verify shipping documents, fabricator markings, and that there was no damage to the material or coatings during transportation and handling.

The Engineer is not responsible for approving or accepting any fabricated materials prior to final erection and assembly at the project site.

(f) Nondestructive Testing: All nondestructive testing of structural steel and welding shall be performed as designated on the plans and in the project specifications. Such testing shall be performed by personnel approved by the Engineer.

Personnel performing Radiographic, Ultrasonic or Magnetic Particle testing shall be certified as a NDT Level II technician in accordance with the American Society for Non Destructive Testing (ASNT), Recommended Practice SNT-TC-1A.

Nondestructive testing shall be performed in accordance with the procedures and standards set forth in the AASHTO/AWS D1.5, Bridge Welding Code. The Department reserves the right to perform additional testing as determined by the Engineer.

All nondestructive testing shall be witnessed by an authorized representative of the Department. Certified reports of all tests shall be submitted to the Materials Testing Division for examination. Each certified report shall identify the structure, member, and location of weld or welds tested. Each report shall also list the length and location of any defective welds and include information on the corrective action taken and results of all retests of repaired welds.

Should the Engineer require nondestructive testing on welds not designated in the contract, the cost of such inspection shall be borne by the Contractor if the testing indicates that any weld is defective. If the testing indicates the weld to be satisfactory, the actual cost of such inspection will be paid by the Department.

(g) Marking: Each member shall be identified with an erection mark corresponding with the member identification mark on the approved shop drawings. Identification marks shall be impressed into the member with a low stress stamp in a location in accordance with standard industry practice.

(h) Shipping, Handling, Storage and Receiving: The Contractor shall make all arrangements necessary to properly load, transport, unload, handle and store all material. The Contractor shall furnish to the Engineer copies of all shipping statements. The weight (mass) of the individual members shall be shown on the statements. Members having a weight (mass) of more than 3 tons (2700 kilograms) shall have the weight (mass) marked thereon. All material shall be unloaded promptly upon delivery. The Contractor shall be responsible for any demurrage charges. Damage to any material during transportation, improper storage, faulty erection, or undocumented fabrication errors may be cause for rejection of said material at the project site. Top lateral bracing should be installed in tub girders prior to shipping and erection of the field pieces. All costs associated with any corrective action will be borne by the Contractor.

4. Field Erection: A meeting shall be held on site prior to any erection of structural steel. The Contractor shall name the person responsible for the steel erection work and provide copies of all crane operator licenses. Proposed equipment, rigging, timetable and methods shall be proposed at this meeting.

(a) Falsework: Any temporary work shall be constructed in conformance with the working drawings. The Contractor shall verify that the quality of materials and work employed are consistent with their design.

All girders shall be stabilized with falsework, temporary braces, or holding cranes until a sufficient number of adjacent girders are erected with all diaphragms and cross frames connected to provide necessary lateral support as shown in the erecting diagrams.

Adjustment shall be provided in the falsework and other temporary supports so that the temporary elevation of the structural steel provided by the falsework is consistent with the deflections that will occur as the structure is completed. The elevation of falsework shall be such as to support the girders at the cambered no-load elevation. Unloading of temporary supports should be performed such that all temporary supports at each cross section are unloaded uniformly. Unless specifically permitted by the Engineer, welding of falsework support brackets to structural steel is not allowed.

Unless erected by the cantilever method, truss spans shall be erected on blocking. The blocking shall be left in place until the tension chord splices are fully bolted and all other truss connections pinned and bolted and the proper geometric shape is achieved.

(b) Anchorages: Anchor bolts and similar materials which are to be placed during the erection of the structural steel shall be carefully and accurately set to the requirements of Article 6.01.03.

(c) Bearings: Bearing plates shall have a full and uniform bearing upon the substructure masonry. Bearing plates shall be placed upon bearing areas which are finished according to the requirements of Article 6.01.03.

Prefabricated pads conforming to the requirements of Article M-12.01 shall be installed unless specifically noted otherwise on the contract plans.

Each piece shall be the same size as the bearing plate it is to support and the holes to accommodate the anchor bolts shall be clearly and accurately punched before setting the pad in place.

In placing expansion bearings, due consideration shall be given to the temperature at the time of erection and stage construction requirements. The nuts of anchor bolts at expansion bearings shall be adjusted to permit the free movement of the span.

(d) Field Assembly: Members and components shall be accurately assembled as shown on the plans and any match marks shall be followed. The material shall be carefully handled so that no components will be bent, broken or otherwise damaged.

Hammering which will injure or distort the members is not permitted. Bearing surfaces and surfaces to be in permanent contact shall be cleaned before the members are assembled.

Cylindrical erection pins shall be 1/32 inch (0.8 mm) larger than the nominal diameter of the holes.

Splices and field connections of main stress carrying members shall be made with a minimum of 50% of the holes filled and tightened with high strength bolts before the lifting system is released. The bolts shall be installed uniformly throughout the connection. Lateral stability must be maintained until the deck is placed.

The Contractor shall ensure that girders are stable throughout the erection process. The stage of completeness of the bolted connections shall be considered when evaluating the strength and stability of the steel during erection. For Closed Box and Tub Girders the Contractor shall ensure that the cross- section shape of each box is maintained during erection. Top lateral bracing should be installed in tub girders prior to shipping and erection of the field pieces.

(e) Welded Connections:

Unless otherwise shown on the plans or indicated by the special provisions, welding of structural steel shall be done in accordance with “ANSI/AASHTO/AWS D1.5 Bridge Welding Code.”

The Contractor’s welding and inspection procedures for each type of field weld and field tacking must be submitted to the Engineer on the form designated by the Department. All procedures must be approved by the Materials Testing Division prior to any work and must be adhered to at all times.

Quality control is the responsibility of the Contractor. The Contractor must provide an AWS Certified Welding Inspector (CWI) in accordance with AWS D1.5. The CWI must be qualified and certified in accordance with the provisions of AWS QC1, *Standard for Qualification and Certification of Welding Inspectors.*

The CWI shall make visual inspection of all welds. The Contractor will perform magnetic particle inspection, ultrasonic testing inspection, or radiographic testing inspection of field welds when required on the plans or special provisions. Each test may be witnessed by an authorized representative of the Engineer.

Welds or sections of welds containing imperfections determined to be unacceptable by either the CWI or the Engineer shall be removed and re-welded by the Contractor at their expense. Welds so removed and replaced shall be re-inspected by the CWI. All costs for re-inspection or testing of such welds shall be borne by the Contractor.

(f) High Strength Bolted Connections:

The assembly of structural connections using ASTM A 325/ A 325M or ASTM A 490/A 490M high-strength bolts shall be installed so as to develop the minimum required bolt tension specified in Table A. The Manufacturer's certified test report; including the rotational capacity test results **must** accompany the fastener assemblies. Fastener Assemblies delivered without the certified reports will be rejected.

Bolts, nuts and washers from each rotational-capacity lot shall be shipped in the same container. If there is only one production lot number for each size of nut and washer, the nuts and washers may be shipped in separate containers. Each container shall be permanently marked with the rotational-capacity lot number such that identification will be possible at any stage prior to installation. Assemblies of bolts, nuts and washers shall be installed from the same rotational-capacity lot. Pins, small parts and packages of bolts, washers, and nuts shall be shipped in boxes, crates, kegs, or barrels. A list and description of the contained materials shall be plainly marked on the outside of each shipping container.

Bolted Parts: All material within the grip of the bolt shall be steel; there shall be no compressible material, such as gaskets or insulation, within the grip. Bolted steel shall fit solidly together after the bolts are tensioned. The length of the bolts shall be such that the end of the bolt will be flush with or outside of the face of the nut when properly installed.

Surface Conditions: At the time of assembly, all connection surfaces, including surfaces adjacent to the bolt head and nut, shall be free of scale, except tight mill scale, and shall be free of dirt or other foreign material. Burrs that would prevent solid seating of the connected parts in the snug tight condition shall be removed.

Paint is permitted on the faying surface, including slip critical connections, only when shown on the plans. The faying surfaces of slip-critical connections shall meet the requirements of the following paragraphs, as applicable:

- Connections specified to have un-coated faying surfaces: any paint, including any inadvertent over spray, shall be excluded from areas closer than one bolt diameter, but not less than 1.0 in. (25 mm), from the edge of any hole and all areas within the bolt pattern.

- Connections specified to have painted faying surfaces: shall be blast cleaned and coated in accordance with Section 6.04, and shall not be assembled until the coating system has been properly cured.

- Connections specified to have galvanized faying surfaces: shall be hot-dip galvanized in accordance with ASTM A 123/A 123M, and shall subsequently be roughened by means of hand wire brushing. Power wire brushing is not permitted.

Installation: At the pre-erection meeting, the Contractor shall inform the Engineer of their planned method of tensioning high strength bolts. Acceptable methods are: Turn-of-Nut, Calibrated Wrench or Direct Tension Indicator.

Fastener Assemblies:

A "fastener assembly" is defined as a bolt, a nut, and a washer. Only complete fastener assemblies of appropriately assigned lot numbers shall be installed.

Fastener assemblies shall be stored in an area protected from dirt and moisture. Only as many fastener assemblies as are anticipated to be installed and tensioned during a work shift shall be taken from protected storage. Fastener assemblies not used shall be returned to protected storage at the end of the shift. Prior to installation, fastener assemblies shall not be cleaned of lubricant. Fastener assemblies which accumulate rust or dirt resulting from site conditions shall be cleaned, relubricated and tested for rotational-capacity prior to installation. All galvanized nuts shall be lubricated with a lubricant containing a visible dye. Plain bolts must be oily to the touch when delivered and installed. Lubricant shall be removed prior to painting.

All bolts shall have a hardened washer under the turned element (nut or bolt head). All hardened washers shall conform to the requirements of ASTM F 436/F 436M.

Where necessary, washers may be clipped on one side to a point not closer than 7/8 of the bolt diameter from the center of the washer. Circular and beveled washers, when used adjacent to direct tension indicator washers shall not be clipped. Direct tension indicator washers shall not be clipped.

Bolt Tension Measuring Device: The Contractor shall provide a calibrated bolt tension measuring device (a Skidmore-Wilhelm calibrator (Skidmore) or other acceptable bolt tension indicating device) at all times when, and at all locations where high-strength fasteners are being installed and tensioned. The tension measuring device (Skidmore) shall be calibrated by an approved testing agency at least annually. The Skidmore shall be used to perform the rotational-capacity test of the fastener assemblies. The Skidmore will also be used to substantiate (1) the suitability of the fastener assembly to satisfy the requirements of Table A, including lubrication as required, (2) calibration of the installation wrenches, if applicable, and (3) the understanding and proper use by the contractor of the selected method of tensioning to be used.

Complete fastener assemblies shall be installed in properly aligned holes and then tensioned by the Turn-of-Nut, Calibrated Wrench or Direct Tension Indicator method to the minimum tension specified in Table A. Tensioning may be done by turning the bolt while the nut is prevented from rotating when it is impractical to turn the nut. Impact wrenches, if

used, shall be of adequate capacity and sufficiently supplied with air to perform the required tensioning of each bolt in approximately 10 seconds.

Bolts shall be installed in all holes of the connection and the connection brought to a snug condition. Snug is defined as having all the plies of the connection in firm contact. Snugging shall progress systematically from the most rigid part of the connection to the free edges. The bolts of the connection shall then be tightened in a similar manner as necessary until the connection is properly tensioned.

Nuts shall be located, whenever practical, on the side of the connection which will not be visible from the traveled way.

Unless otherwise approved by the Engineer fastener assemblies shall be brought to full tension immediately following snugging.

Fully tensioned fastener assemblies shall not be reused. Retightening previously tensioned bolts which may have been loosened by the tensioning of adjacent bolts shall not be considered as reuse.

Rotational-Capacity Tests: In addition to the certified test reports, on site Rotational-capacity tests may be required by the Engineer. This test shall be performed by the Contractor at the location where the fasteners are installed and tensioned. When performed in the field, the procedure shall conform to the requirements of ASTM A 325/ A 325M Appendix A-1.

Turn-of-Nut Installation Method:

At the start of the work, the Contractor shall demonstrate that the procedure used by the bolting crew to develop a snug condition and to control the turns from a snug condition develops the tension required in Table A. To verify their procedure, the Contractor shall test a representative sample of not less than three complete fastener assemblies of each diameter, length and grade to be used in the work. This shall be performed at the start of work using a Skidmore. Periodic retesting shall be performed when ordered by the Engineer.

After snugging the connection, the applicable amount of rotation specified in Table B shall be achieved. During the tensioning operation there shall be no rotation of the part not turned by the wrench. Tensioning shall progress systematically from the most rigid part of the connection to its free edges.

Calibrated Wrench Installation Method:

Calibrated wrench method may be used only when the installation wrenches are properly calibrated daily, or as determined by the Engineer. Standard torques determined from tables or from formulas which are assumed to relate torque to tension **shall not** be acceptable.

The Contractor shall demonstrate to the Engineer periodically that all equipment and wrenches are providing a torque which has been calibrated to produce the minimum tension specified in Table A. The installation procedures shall be verified periodically, as determined by the Engineer, for each bolt diameter, length and grade using the fastener assemblies that are being installed in the work. This verification testing shall be accomplished in a Skidmore by tensioning three complete fastener assemblies of each diameter, length and grade from those being installed with a hardened washer under the element turned.

When significant difference is noted in the surface condition of the bolts, threads, nuts or washers, as determined by the Engineer, wrenches shall be recalibrated. The Contractor shall verify during the installation of the assembled steel work that the wrench adjustment selected by the calibration does not produce a nut or bolt head rotation from snug greater than that permitted in Table B. If manual torque wrenches are used, nuts shall be turned in the tensioning direction when torque is measured.

When calibrated wrenches are used to install and tension bolts in a connection, bolts shall be installed with hardened washers under the element turned to tension the bolts. Once the connection has been snugged, the bolts shall be tensioned using the calibrated wrench. Tensioning shall progress systematically from the most rigid part of the connection to its free edges. A calibrated torque wrench shall be used to "touch up" previously tensioned bolts which may have been relaxed as a result of the subsequent tensioning of adjacent bolts until all bolts are tensioned to the prescribed amount.

Direct Tension Indicator Installation Method:

When Direct Tension Indicators (DTIs) meeting the requirements of Section M.06 are used with high-strength bolts to indicate bolt tension, they shall be subjected to the verification testing described below and installed in accordance with the method specified below. Unless otherwise approved by the Engineer, the DTIs shall be installed under the head of the bolt and the nut turned to tension the bolt. The Manufacturer’s recommendations shall be followed for the proper orientation of the DTI and additional washers, if any, required for the correct use of the DTI. Installation of a DTI under the turned element may be permitted if a washer is used to separate the turned element from the DTI.

Verification: Verification testing shall be performed in a Skidmore. A special flat insert shall be used in place of the normal bolt head holding insert. Three verification tests shall be required for each combination of fastener assembly rotational-capacity lot, DTI lot, and DTI position relative to the turned element (bolt head or nut) to be used on the project. The fastener assembly shall be installed in the tension-measuring device with the DTI located in the same position as in the work. The element intended to be stationary (bolt or nut) shall be restrained from rotation.

The verification tests shall be conducted in two stages. The bolt nut and DTI assembly shall be installed in a manner so that at least three and preferably not more than five threads are located between the bearing face of the nut and the bolt head. The bolt shall be tensioned first to the load equal to that listed in Table C

under Verification Tension for the grade and diameter of the bolt. If an impact wrench is used, the tension developed using the impact wrench shall be no more than two-thirds of the required tension. Subsequently, a manual wrench shall be used to attain the required tension. The number of refusals of the 0.005-in. (0.125-mm) tapered feeler gage in the spaces between the protrusions shall be recorded. The number of refusals for uncoated DTIs under the stationary or turned element, or coated DTIs under the stationary element, shall not exceed the number listed under Maximum Verification Refusals in Table C for the grade and diameter of bolt used. The maximum number of verification refusals for coated DTIs (galvanized, painted, or epoxy-coated), when used under the turned element, shall be no more than the number of spaces on the DTI less one. The DTI lot shall be rejected if the number of refusals exceeds the values in the table or, for coated DTIs if the gage is refused in all spaces.

After the number of refusals is recorded at the verification load, the bolt shall be further tensioned until the 0.005-in (0.125-mm) feeler gage is refused at all the spaces and a visible gap exists in at least one space. The load at this condition shall be recorded and the bolt removed from the tension-measuring device. The nut shall be able to be run down by hand for the complete thread length of the bolt excluding thread run-out. If the nut cannot be run down for this thread length, the DTI lot shall be rejected unless the load recorded is less than 95 percent of the average load measured in the rotational capacity test of the fastener lot as specified previously in "Rotational-Capacity Tests."

If the bolt is too short to be tested in the calibration device, the DTI lot shall be verified on a long bolt in a calibrator to determine the number of refusals at the verification tension listed in Table C. The number of refusals shall not exceed the values listed under maximum verification refusals in Table C. Another DTI from the same lot shall then be verified with the short bolt in a convenient hole in the work. The bolt shall be tensioned until the 0.005-in. (0.125-mm) feeler gage is refused in all spaces and a visible gap exists in at least one space. The bolt shall then be removed from the tension-measuring device and the nut shall be able to be run down by hand for the complete thread length of the bolt excluding thread run-out. The DTI lot shall be rejected if the nut cannot be run down this thread length.

Installation: Installation of fastener assemblies using DTIs shall be performed in two stages. The stationary element shall be held against rotation during each stage of the installation. The connection shall be first snugged with bolts installed in all holes of the connection and tensioned sufficiently to bring all the plies of the connection into firm contact. The number of spaces in which a 0.005-in. (0.125-mm) feeler gage is refused in the DTI after snugging shall not exceed those listed under maximum verification refusals in Table C. If the number exceeds the values in the table, the fastener assembly shall be removed and another DTI installed and snugged.

For uncoated DTIs used under a stationary or turned element and for coated DTIs used under a stationary element, the bolts shall be further tensioned until the number of refusals of the 0.005-in. (0.125-mm) feeler gage shall be equal or greater than the number listed under Minimum Installation Refusals in Table C. If the bolt is

tensioned so that no visible gap in any space remains, the bolt and DTI shall be removed and replaced by a new properly tensioned bolt and DTI.

When coated DTIs (galvanized, painted or epoxy coated) are used under a turned element, the 0.005-in (0.125-mm) feeler gage shall be refused in all spaces.

Inspection:

The Contractor shall provide all the material, equipment, tools and labor necessary for the inspection of the bolted connections. Access to the bolted parts and fastener assemblies, both before and after the fasteners are installed and tensioned, shall be provided.

The Contractor is responsible for Quality Control (QC). The Contractor shall review this specification with its project personnel prior to performing the work. The Contractor shall verify the proper markings, surface conditions and storage of fastener assemblies. The Contractor shall inspect the faying surfaces of connections for compliance with the plans and specifications. The Contractor shall provide to the Engineer a copy of their written QC report for each shift of the calibration or verification testing specified. This report shall confirm that the selected procedure is properly used and that the fastener assemblies installed meet the tensions specified in Table A. The Contractor shall monitor the installation of fasteners in the work to assure that the selected procedure, as demonstrated in the initial testing to provide the specified tension, is routinely and properly applied.

The Contractor, in the presence of the Engineer, shall inspect the tensioned bolts using an inspection torque wrench, as defined below. If direct tension indicator devices are used, the appropriate feeler gauge will be used. Inspection tests shall be performed within 24 hours of bolt tensioning to prevent possible loss of lubrication or corrosion influence on tensioning torque.

The inspection torque wrench shall be calibrated as follows. Three bolts of the same grade, size, and condition as those under inspection shall be placed individually in a device calibrated to measure bolt tension. This calibration operation shall be done at least once each inspection day. There shall be a washer under the part turned in torquing each bolt. In the calibrated device, each bolt shall be tightened by any convenient means to the specified tension. The inspection wrench shall then be applied to the tensioned bolt to determine the torque required to turn the nut or head five degrees in the tightening direction. The average of the torque required for all three bolts shall be defined as the job-inspection torque.

Twenty-five percent, but a minimum of two, of the tensioned bolts shall be selected by the Engineer for inspection in each connection. (The Engineer may reduce the number of bolts tested at a connection to 10% based on the Contractor's past performance and splice location.) The job-inspection torque shall then be applied to each selected assembly with the inspection torque wrench turned in the tightening direction. If all inspected bolt heads or nuts do not turn, the bolts in the connection shall be considered to be properly tensioned. If the torque turns one or more bolt heads or nuts, the job-inspection torque shall then be applied to **all** bolts in the connection or to the satisfaction of the Engineer. Any bolt whose head or nut turns shall be re-tensioned and re-inspected. The Contractor

may, however, re-tension all the bolts in the connection with the inspection torque wrench and resubmit it for inspection, so long as the bolts are not over-tensioned or damaged by this action.

(g) Field Corrections and Misfits: Reaming of bolt holes during erection shall be permitted only with approval of the Engineer. No excessive forces shall be applied to any member to provide for proper alignment of the bolt holes.

The correction of minor misfits involving minor amounts of reaming, cutting, grinding and chipping shall be considered a legitimate part of the erection. However, any error in the shop fabrication or deformation resulting from handling and transportation may be cause for rejection. The Contractor shall be responsible for all misfits, errors and damage and shall make the necessary corrections and replacements.

TABLE A (Metric)
Minimum Bolt Tension in Kilonewtons*

Bolt Size	ASTM A 325M	ASTM A 490M
M16	91	114
M20	142	179
M22	176	221
M24	205	257
M27	267	334
M30	326	408
M36	475	595

*Equal to 70% of specified minimum tensile strength of bolts (as specified in ASTM Specifications for tests of full-size A 325M and A 490M bolts with metric coarse threads series ANSI B1.13M, loaded in axial tension) rounded to the nearest kilonewton.

Table A (English)
Minimum Bolt Tension in kips*

Bolt Size (Inches)	ASTM A 325	ASTM A 490
5/8	19	24
¾	28	35
7/8	39	49
1	51	64
11/8	56	80
1¼	71	102
13/8	85	121
1½	103	148

*Equal to 70% of specified minimum tensile strength of bolts (as specified in ASTM Specifications for tests of full-size A 325 and A 490 bolts with UNC threads, loaded in axial tension) rounded to the nearest kip.

TABLE B (English and Metric)
Nut Rotation from the Snug Condition
Geometry[a,b,c] of Outer Faces of Bolted Parts

Bolt Length (measured from underside of head to end of bolt)	Both Faces Normal to Bolt Axis	One Face Normal to Bolt Axis and Other Face Sloped Not More Than 1:20, Bevel Washer Not Used	Both Faces Sloped Not More Than 1:20 From Normal to Bolt Axis, Bevel Washer Not Used
Up to and including 4 diameters	1/3 turn	1/2 turn	2/3 turn
Over 4 diameters but not exceeding 8 diameters	1/2 turn	2/3 turn	5/6 turn
Over 8 diameters but not exceeding 12 diameters	2/3 turn	5/6 turn	1 turn

(a) Nut rotation, as used in Table B, shall be taken as relative to the bolt, regardless of the element (nut or bolt) being turned. For bolts installed by 1/2 turn and less, the tolerance should be plus or minus 30 degrees; for bolts installed by 2/3 turn and more, the tolerance should be plus or minus 45 degrees.

To determine the nut rotation for installation and inspection of the fasteners, the nut and the end of the bolt or the head of the bolt and the adjacent steel shall be match marked.

(b) The values, given in Table B, shall be applicable only to connections in which all material within grip of the bolt is steel.

(c) No research work has been performed by the Research Council Riveted and Bolted Structural Joints to establish the turn-of-nut procedure when bolt lengths exceed 12 diameters. For situations in which the bolt length, measured from the underside of the head to the end of the bolt, exceeds 12 diameters, the required rotation shall be determined by actual tests in a suitable tension device simulating the actual conditions.

TABLE C (Metric)

Bolt Dia. (in.)	Verification Tension		Maximum Verification Refusals		DTI Spaces		Minimum Installation Refusals	
	A325	A490	Type 8.8	Type 10.9	Type 8.8	Type 10.9	Type 8.8	Type 10.9
M16	96	120	1	1	4	4	2	2
M20	149	188	2	2	5	6	3	3
M22	185	232	2	2	5	6	3	3
M24	215	270	2	2	5	6	3	3
M27	280	351	2	3	6	7	3	4
M30	342	428	3	3	7	8	4	4
M36	499	625	3	4	8	9	4	5

TABLE C (English)

Bolt Dia. (in.)	Verification Tension		Maximum Verification Refusals		DTI Spaces		Minimum Installation Refusals	
	A325	A490	325	490	325	490	325	490
5/8	20	25	1	2	4	5	2	3
¾	29	37	2	2	5	6	3	3
7/8	41	51	2	2	5	6	3	3
1	54	67	2	3	6	7	3	4
1 1/8	59	84	2	3	6	7	3	4
1¼	75	107	3	3	7	8	4	4
1 3/8	89	127	3	3	7	8	4	4
1½	108	155	3	4	8	9	4	5

Method of Measurement: Payment under this item will be at the contract lump sum price per each complete bridge structure or shall be based on the net weight (mass) of metal in the fabricated structure, whichever method appears on the proposal form.

When payment is based on a lump sum basis, the work, including anchor bolts, steel bearings and plates will not be measured for payment. Bearing plates welded to the girder are included in the price of the structural steel and bearing plates bonded to the bearings are included in the price of the bearing.

When payment is based on the net weight (mass) of metal in the fabricated structure, it shall be computed as described below.

The weight (mass) of the metal works to be paid for under the item of structural steel shall be computed on the basis of the net finished dimensions of the parts as shown on the shop drawings, deducting for copes, cuts, clips and all open holes, except bolt holes, and on the following basis:

1. The weights (masses) of rolled shapes shall be computed on the basis of their nominal weights (masses) per foot (meter), as shown in the shop drawings or listed in handbooks.

The weight (mass) of plates shall be computed on the basis of the nominal weight (mass) for their width and thickness as shown on the shop drawings.

2. The weight (mass) of temporary erection bolts, shop and field paint, galvanization, boxes, crates and other containers used for shipping, and materials used for supporting members during transportation and erection, shall not be included.

3. The weight (mass) of all high strength bolts, nuts, and washers shall be included on the basis of the following weights (masses):

Weight per 100				
Nominal diameter of H.S. bolt (inch)	**Bolthead, nut, 1 washer and stickthrough (lbs)**		**Nominal diameter of H.S. bolt (mm)**	**Bolthead, nut, 1 washer and stickthrough (kg)**
1/2	22		16	17
5/8	33		20	26
3/4	55		22	39
7/8	84		24	50
1	120		27	60
1 1/8	169		30	73
1 1/4	216		36	122

4. The weight (mass) of weld metal shall be computed on the basis of the theoretical volume from plan dimensions of the welds.

Size of fillet in Inches (mm)		**Weight of weld in pounds per foot (kg per meter)**	
3/16	(5)	0.08	(0.119)
¼	(6)	0.14	(0.208)
5/16	(8)	0.22	(0.327)
3/8	(9.5)	0.30	(0.446)
½	(13)	0.55	(0.818)
5/8	(16)	0.80	(1.190)
¾	(19)	1.10	(1.636)
7/8	(22)	1.50	(2.231)
1	(25)	2.00	(2.974)

5. The weight (mass) of steel shims, filler plates and anchor bolts shall be measured for payment.

When the pay item “Materials for Structural Steel (Site No.)” is included in the Contract, payment for furnishing of the raw steel material for the plates and shape material only, excluding any markup, based on the net weight (mass) required, and the payment will be made under the estimated item “Materials for Structural Steel (Site No.)”. The overruns or wastage shall not exceed ten per cent for straight girders and fifteen per cent for curved girders. All other work specified in this section for the bridge will be deemed paid for under the lump sum price. In the absence of the pay item “Materials for Structural Steel (Site No.)”, the cost of the raw material is included in the Lump Sum payment for this item, “Structural Steel (Site No.)”.

Basis of Payment: The structural steel, incorporated in the completed and accepted structure, will be paid for at the contract lump sum price for "Structural Steel (Site No.)," or at the contract unit price per hundred weight (kilogram) for "Structural Steel," whichever is indicated in the contract documents.

Payment for either method shall be for structural steel, complete in place, which price shall include quality control, furnishing, fabricating, transporting, storing, erecting, welding, surface preparation and all materials including fastener assemblies, steel bearing assemblies and anchor bolts, equipment, tools and labor incidental thereto.

When the pay item “Materials for Structural Steel (Site No.)” is included in the Contract, payment for furnishing of the raw steel material for the plates and shape material only,

excluding any markup, based on the net weight (mass) required, and the payment will be made under the estimated item “Materials for Structural Steel (Site No.)”. All remaining work including, but not limited to, preparation of shop drawings, fabricating, transporting, storage and handling, erecting, surface preparation and all materials, equipment, tools and labor incidental thereto, will be paid for under “Structural Steel (Site No.)”.

In the absence of the pay item “Materials for Structural Steel (Site No.)”, the cost of the raw material is included in the Lump Sum payment for this item, “Structural Steel (Site No.)”. All remaining work including, but not limited to, preparation of shop drawings, fabricating, transporting, storage and handling, erecting, surface preparation and all materials, equipment, tools and labor incidental thereto, will be paid for under “Structural Steel (Site No.)”.

No direct payment will be made for setting anchor bolts, preparing bearing areas, furnishing and placing materials under bearings. No direct payment will be made for non destructive testing as shown on the plans.

Pay Item	Pay Unit
Structural Steel (Site No.)	l.s. (l.s.)
Structural Steel	cwt. (kg)

CONNECTICUT
SUPPLEMENTAL SPECIFICATION
SECTION 6.12
CONCRETE CYLINDER CURING BOX

Delete the entire section and replace with it the following:

6.12.01 –Description: This item shall consist of furnishing a box for curing concrete test cylinders. The box shall be commercially available and manufactured specifically for curing concrete test cylinders. The box will remain the property of the Contractor at the conclusion of the project. The box shall be delivered to a location on the project as directed by the Engineer.

6.12.02 – Materials: A catalog cut listing detailed specifications of the box and operating instructions from the manufacturer must be submitted to the Engineer. The box and its components shall be constructed of non-corroding materials and shall be capable of storing a minimum of 18 test cylinders, 6” X 12” (152 mm X 305 mm) stored vertically with the lid closed. The lid must be watertight when closed and hinged in the back with security latches on the front that can be padlocked. The box must be capable of holding water to a maximum level of one inch above test cylinders placed in the box vertically. A drain hole must be provided in a wall of the box to allow manual drainage of the water that exceeds this level. A drain hole must also be provided at the bottom of the box so that it can be manually emptied. The temperature of the water must be controlled by heating and cooling device capable of maintaining the temperature of the water within a range of 60 to 80º F, +/- 2 ºF (15.5 to 26.7 ºC, +/- 1 ºC) within an outside ambient air temperature range of -10 to 120 º F (-23.3 to 49 ºC). The heating and cooling device must be positioned to allow free circulation of air and water around the cylinders and be rated at 120 volts and 15 amps. A rack must be provided within the box to support the cylinders above the pool of temperature controlled water. The device must be thermostatically controlled with a digital readout that is capable of displaying the high/low water temperature within the box since the last reading was taken.

6.12.03 - Construction Methods: The Contractor shall maintain the curing box in working order and shall provide all necessary electrical service and water so that the curing box can be used properly during the entire course of the project. Any curing box that is not operating properly, as determined by the Engineer, shall be replaced within 24 hours by the Contractor at no expense to the State. The Engineer reserves the right to prohibit placement of fresh concrete on the project until a curing box acceptable to the Engineer is operational on the project site.

6.12.04 - Method of Measurement: The furnishing of the concrete test cylinder curing box will be measured for payment by the number of boxes delivered by the Contractor and accepted by the Engineer.

6.12.05 – Basis of Payment: This item will be paid for at the contract unit price each for "Concrete Cylinder Curing Box" ordered and accepted on the project, which price shall include all submittals, material, tools, equipment, and labor incidental thereto. The price shall also include all maintenance and operating costs related to the curing box for the duration of the project.

CONNECTICUT
SUPPLEMENTAL SPECIFICATION
SECTION 6.51
CULVERTS

6.51.02 – Materials:

Delete the 2nd paragraph, "Pipes of the type indicated ... of Article M.02.01." and insert the following paragraph:

"Pipes of the type indicated on the plans and joint sealant shall conform to the requirements of Article M.08.01. Bedding material shall conform to the requirements of Article M.08.03. Granular fill shall conform to the requirements of Article M.02.01."

6.51.03 – Construction Methods:

In the 8th paragraph replace "gravel fill" with "granular fill".

Delete the 13th paragraph, "Bituminous fiber and … as the pipe."

6.51.04 – Methods of Measurement:

In the 7th paragraph replace "Gravel Fill" with "Granular Fill".

6.51.05 – Basis of Payment:

In the 8th paragraph replace "Gravel Fill" with "Granular Fill".

CONNECTICUT
SUPPLEMENTAL SPECIFICATION
SECTION 7.02
PILES

Delete the entire section and replace it with the following:

SECTION 7.02
PILES

7.02.01—Description
7.02.02—Materials
7.02.03—Construction Methods
7.02.04—Method of Measurement
7.02.05—Basis of Payment

7.02.01—Description: This item shall consist of furnishing and driving foundation piles of the type and dimensions designated. Piles shall conform to and be installed in accordance with these specifications, and at the location, and to the elevation, penetration and/or capacity shown on the plans, or as directed by the Engineer. If specified in the plans or directed by the Engineer, piles shall be tipped, shaped, reinforced or otherwise pointed and strengthened
Test piles shall be piles of the type specified, driven in advance of placing orders for the piles, for the purpose of determining length or bearing capacity of piles. The Contractor shall furnish the piles in accordance with an itemized order list which will be furnished by the Engineer, showing the number and length of all piles. When test piles are specified, the pile lengths shown on the plans are for estimating purposes only. The actual lengths to be furnished for production piles will be determined by the Engineer after the test piles have been driven.

7.02.02—Materials: Piles of the type indicated on the plans shall conform to the requirements of Articles M.09.02 and M.14.01.

7.02.03—Construction Methods

1. Pile Types:
(a) Timber Piles: The method of storing and handling timber piles shall be such as to avoid damage to the piles. Special care shall be taken to avoid breaking the surface of treated piles. Cant dogs, hooks, or pike-poles shall not be used. Cuts or breaks in the surface of treated piling shall be given three brush coats of hot creosote oil of approved quality, and hot creosote oil shall be poured into all bolt holes.

(**b) Steel Piles:** The methods of storing and handling steel piles shall be such as to prevent damage to the piles and to protect them from corrosion.

(c) Cast-In-Place Concrete Piles: Cast-in-place concrete piles shall be constructed by driving steel shells and filling them with concrete. Shells shall be continuously or incrementally tapered, or cylindrical, or a combination of continuously or incrementally

tapered lower sections, which are extended with cylindrical upper sections, unless otherwise provided in the plans or special provisions. The tapered portion of piles shall have a minimum tip diameter of 8 inches (200 millimeters) and shall change in diameter not less than 1 inch in every 12 feet (7 millimeters/meter). Cylindrical piles and the cylindrical extension portions of tapered piles shall have a minimum diameter of 12 inches (300 millimeters). Shells for cast-in-place concrete piles shall be formed by joining sections of the same manufacture, unless otherwise permitted by the Engineer. Composite shell piles, which are piles composed of different thicknesses or of different manufacture, shall not be used unless shown on the plans or approved by the Engineer. Prefabricated driving points or other type tip enclosures shall be subject to the approval of the Engineer.

The Contractor shall furnish shells of a type and gage which can be driven without distortion. Shells which fail, fracture or otherwise distort during driving or after driving shall be withdrawn or replaced at the Contractor's expense. The metal of shells which are to be driven without a mandrel shall be of sufficient thickness to withstand the driving without failure, fracture or distortion, but in no case shall the thickness be less than No. 7 gage. Shells driven with a mandrel shall have a thickness not less than No. 18 gage. Piles having a shell thickness less than No. 9 gage shall be reinforced as shown on the plans.

Composite shell piles formed by extending lower sections of No. 7 or heavier gage, with upper sections of lighter than No. 7 gage, shall be driven with an internal mandrel in such a manner so as to insure shell alignment and maximum hammer energy transmission throughout the pile shell length. All details concerning compatibility of shell and mandrel construction shall be subject to the approval of the Engineer.

After driving has been completed, the shell shall be inspected and approved before any concrete is placed. The Contractor shall provide suitable lights and other equipment necessary to inspect each shell throughout its length.

All seams, joints and splices in shells shall develop the full strength of the shell and shall be watertight. Damaged shells that are unacceptable to the Engineer shall be filled with sand and a replacement shell or shells shall be driven adjacent thereto.

Reinforcement shall be placed in accordance with the requirements of the plans or special provisions.

No concrete shall be placed in a pile until all driving within a radius of 15 feet (4.5 meters) from the pile has been completed, or until all the shells for any one bent have been completely driven. If this is not practical, all driving within the above limits shall be discontinued until the concrete in the last pile cast has set at least 7 days.

Concrete shall be placed continuously in each pile, care being used to fill every part of the shell, and to work concrete around the reinforcement without displacing it. No concrete shall be placed in shells containing an accumulation of water or any foreign material.

Extensions, or "build-ups" on concrete piles, shall be avoided; but when necessary, they shall be made as specified in Subarticle 7.02.03-7.

(d) Prestressed Concrete Piles (Pretensioned): The piles shall be manufactured in accordance with the provision of Article 5.14.03, except as follows:

(1) Forms: The forms for the piles shall be of substantial construction and shall produce a uniformly smooth surface on all formed sides. A minimum concrete cover of 2 inches (50 millimeters) shall be maintained for prestressing elements by the use of spreaders or by bundling in areas adjacent to openings or inserts. Ties shall also have a minimum cover of 2 inches (50 millimeters) at these locations. Side forms carrying no load may be removed after 24 hours with the permission of the Engineer or after the concrete has reached the minimum transfer strength as required by Subarticle M.09.02-6.

(2) Finishing: The topside surface of the piles shall be given a uniformly smooth steel trowel finish to match the surface of the formed sides. The prestressing elements shall be cut flush or recessed 1/8 inch (3 millimeters) to the top of the pile. Projecting fins and surface imperfections shall be removed in a workmanlike manner. Exposed jet pipe connections, inserts or other devices shall be removed or recessed to a depth as directed, and the hole or opening patched with non-shrink grout in a workmanlike manner. The patching material shall have a degree of finish comparable to the adjacent surfaces. Additional finishing of piles, if required, shall be as shown on the plans or as otherwise directed.

(3) Handling and Storage: Care shall be taken during storage, transporting, hoisting and handling of the prestressed piles to prevent cracking or damage. Damaged piles shall be replaced by the Contractor at his expense. Lifting and support points shall be marked on the piles as required.

(4) Pile Extensions: Pile extensions shall normally be fabricated for this purpose in accordance with the specifications. However, sound sections of pile cutoffs or sound portions of rejected piles may be used, subject to the approval of the Engineer. Short pile extensions may, with the permission of the Engineer, be cast-in-place monolithically with the footing or cap.

2. Pile Driving Equipment:

(a) Hammers: Piles shall be driven with approved air, steam, diesel, or hydraulic hammers or a combination of acceptable hammer and water jet. The plant and equipment furnished for air/steam hammers shall have sufficient capacity to maintain at the hammer, under working conditions, the volume and pressure specified by the manufacturer. The plant and equipment shall be equipped with accurate pressure gauges which are easily accessible to the Engineer. The valve mechanism and other parts of the hammer shall be properly maintained so that the length of stroke for a single-acting hammer and the number of blows per minute for a double-acting hammer will be obtained. The power plant for hydraulic hammers shall have sufficient capacity to maintain at the hammer, under working conditions, the volume and pressure specified by the manufacturer. The power plant and equipment shall be equipped with accurate pressure gauges which are easily accessible to the Engineer.

The size of hammer shall be adapted to the type and size of piles and the driving conditions. Unless otherwise specified, the minimum rated striking energy per blow for

hammers used shall be 7,000-foot pounds (9,500 joules) for driving timber piles; 15,000-foot pounds (20,000 joules) for driving steel piles and for driving shells for cast-in-place concrete piles; and 19,000-foot pounds (25,000 joules) for driving precast concrete piles and for driving prestressed concrete piles. The hammer model used for the driving of test piles shall be used for the driving of service or production piles, unless a change is authorized by the Engineer in writing. Hammers delivering an energy which the Engineer considers detrimental to the piles shall not be used.

Non-impact hammers, such as vibratory hammers, or driving aids such as jets, followers, pre-augered and prebored holes shall not be used unless either specifically permitted in writing by the Engineer or stated in the contract documents.

(b) Pile Hammer Approval: All pile driving equipment furnished by the Contractor shall be subject to the approval of the Engineer. All pile driving equipment shall be sized in such a way that the piles can be driven with reasonable effort to the ordered lengths without damage. Approval of pile driving equipment by the Engineer will be based on wave equation analysis and/or other judgments. In no case shall the driving equipment be used without written approval of the Engineer. Prerequisite to such approval, the Contractor shall submit to the Engineer the necessary pile driving equipment information and wave equation analysis at least 30 days prior to driving piles. The wave equation analysis shall be signed, sealed and dated by a Connecticut licensed Professional Engineer.

The criteria that the Engineer will use to evaluate the driving equipment consists of both the required number of hammer blows per foot (per 0.25 meters) as well as the pile stresses at the required ultimate pile capacity. The required number of hammer blows indicated by the wave equation at the ultimate pile capacity shall be between 36 and 180 blows per foot (29 and 147 blows per 0.25 meters) for the driving equipment to be acceptable. In addition, for the driving equipment to be acceptable the pile stresses which are indicated by the wave equation to be generated by the driving equipment shall not exceed the maximum driving stresses allowed by the governing design code stated in the contract documents.

During pile driving operations, the Contractor shall use the approved system. No variations in the driving system will be permitted without the Engineer's written approval. Any change in the driving system will only be considered after the Contractor has submitted the necessary information for a revised wave equation analysis.

If the Engineer determines the Contractor's hammer is unable to transfer sufficient energy to the pile, the hammer shall be removed from service until repaired to the satisfaction of the Engineer.

(c) Drive System Components and Accessories:

(1) Hammer Cushion: Impact pile driving equipment designed to be used with a hammer cushion shall be equipped with a suitable thickness of hammer cushion material to prevent damage to the hammer or pile and to insure uniform driving behavior. Hammer cushions shall be made of durable manufactured materials, provided in accordance with the hammer manufacturer's guidelines. Wood, wire rope, and asbestos hammer cushions are specifically disallowed and shall not be

used. A striker plate as recommended by the hammer manufacturer shall be placed on the hammer cushion to insure uniform compression of the cushion material. The hammer cushion shall be removed from the helmet and inspected prior to beginning pile driving at each structure or after each 100 hours of pile driving, whichever is less. The Contractor shall replace any hammer cushion whose thickness is less than 75% of the original thickness.

(2) Helmet: Piles driven with impact hammers require an adequate helmet or drive head to distribute the hammer blow to the pile head. The helmet shall be axially aligned with the hammer and the pile. The helmet shall be guided by the leads and not be free-swinging. The helmet shall fit around the pile head in such a manner as to prevent transfer of torsional forces during driving, while maintaining proper alignment of hammer and pile. For steel and timber piling, the pile heads shall be cut squarely and a helmet, as recommended by the hammer manufacturer, shall be provided to hold the axis of the pile in line with the axis of the hammer. For precast concrete and prestressed concrete piles, the pile head shall be plane and perpendicular to the longitudinal axis of the pile to prevent eccentric impacts from the helmet. For special types of piles, appropriate helmets, mandrels or other devices shall be provided in accordance with the manufacturer's recommendations so that the piles may be driven without damage.

(3) Pile Cushion: The heads of concrete piles shall be protected by a pile cushion. Pile cushions shall be made of plywood, hardwood, or composite plywood and hardwood materials. The minimum pile cushion thickness placed on the pile head prior to driving shall be at least 4 inches (100 millimeters). A new pile cushion shall be provided for each pile. In addition the pile cushion shall be replaced if, during the driving of any pile, the cushion is compressed more than one-half the original thickness or it begins to burn. The pile cushion dimensions shall match the cross sectional area of the pile top. The use of manufactured pile cushion materials in lieu of a wood pile cushion shall be evaluated on a case by case basis.

(4) Leads: Piles shall be supported in line and position with leads while being driven. Pile driver leads shall be constructed in a manner that affords freedom of movement of the hammer while maintaining alignment of the hammer and the pile to insure concentric impact for each blow. Leads may be either fixed or swinging type. Swinging leads, when used, shall be fitted with a pile gate at the bottom of the leads and, in the case of batter piles, a horizontal brace may be required between the crane and the leads. The pile section being driven shall not extend above the leads. The leads shall be adequately embedded in the ground or the pile constrained in a structural frame such as a template to maintain alignment. The leads shall be of sufficient length to make the use of a follower unnecessary, and shall be so designed as to permit proper alignment of batter piles.

(5) Followers: Followers shall only be used when approved in writing by the Engineer, or when specifically stated in the contract documents. In cases where a follower is permitted, the first pile in each bent and every tenth pile driven thereafter shall be driven full length without a follower, to determine that adequate pile penetration is being attained to develop the ultimate pile capacity. The follower and pile shall be held and maintained in equal and proper alignment during driving. The follower shall be of such material and dimensions to permit the piles to be driven to the penetration depth

determined necessary from the driving of the full length piles. The final position and alignment of the first two piles installed with followers in each substructure unit shall be verified to be within the required location tolerances before additional piles are installed.

(6) Jets: Jetting shall only be permitted if approved in writing by the Engineer or when specifically stated in the contract documents. When jetting is not required in the contract documents, but approved after the Contractor's request, the Contractor shall determine the number of jets and the volume and pressure of water at the jet nozzles necessary to freely erode the material adjacent to the pile without affecting the lateral stability of the in place pile. When jetting is specifically required in the contract documents, the plant shall have sufficient capacity to deliver at all times at least 100 psi (700 kilopascals) pressure at two 3/4-inch (19 millimeter) jet nozzles. In either case, unless otherwise indicated by the Engineer, jet pipes shall be removed when the pile toe is a minimum of 5 feet (1.5 meters) above prescribed toe elevation and the pile shall be driven to the required ultimate pile capacity with an impact hammer. Also, the Contractor shall control, treat if necessary, and dispose of all jet water in a manner satisfactory to the Engineer and in accordance with the provisions of Article 1.10.

(7) Pre-Augering: When stated in the contract documents, the Contractor shall pre-auger holes at pile locations to the depths shown on the plans. Pre-augered holes shall be of a size smaller than the diameter or diagonal of the pile cross section; however, large enough to allow penetration of the pile to the specified depth. If subsurface obstructions, such as boulders or rock layers, are encountered, the hole diameter may be increased to the least dimension which is adequate for pile installation. Any void space remaining around the pile after completion of driving shall be filled with sand or other approved material. The use of spuds shall not be permitted in lieu of pre-augering. Augering, wet-rotary drilling, or other methods of pre-augering shall be used only when approved by the Engineer. When permitted, such procedures shall be carried out in a manner which will not impair the capacity of the piles already in place or the safety of existing adjacent structures. If the Engineer determines that pre-augering has disturbed the capacities of previously installed piles, those piles that have been disturbed shall be restored to conditions meeting the requirements of this specification by redriving or by other methods acceptable to the Engineer. Redriving or other remedial measures shall be instituted after the pre-augering operations in the area have been completed.

3. Pile Capacity

(a) Ultimate Pile Capacity: Piles shall be driven by the Contractor to the penetration depth shown on the plans or to a greater depth if necessary to obtain the ultimate pile capacity. The ultimate pile capacity shall be as defined in the contract documents.

Jetting or other methods shall not be used to facilitate pile penetration unless specifically permitted in the contract documents or in writing by the Engineer. The ultimate pile capacity of jetted piles shall be based on driving resistances recorded during impact driving after the jet pipes have been removed. Jetted piles not attaining the ultimate pile capacity at the ordered length shall be spliced, as

required, at the Contractor's cost, and driven with an impact hammer until the ultimate pile capacity is achieved.

The ultimate pile capacity of piles driven with followers shall only be considered acceptable when the follower driven piles attain the same pile toe elevation or top of bedrock elevation as required for the full length piles driven without followers that attained the required ultimate pile capacity.

(b) Wave Equation: The ultimate pile capacity shall be determined by the Engineer. Piles shall be driven with the approved driving equipment to the ordered length or other lengths necessary to obtain the required ultimate pile capacity. Jetting or other methods to facilitate pile penetration shall not be used unless specifically permitted either in the contract documents or approved by the Engineer after a revised driving resistance is established from the wave equation analysis. Adequate pile penetration shall be considered to be obtained when the specified wave equation resistance criteria is achieved within 5 feet (1.5 meters) of the pile toe elevation, based on ordered length. Piles not achieving the specified resistance within these limits shall be driven to penetrations established by the Engineer.

(c) Static Load Tests: Compression load tests shall be performed by procedures set forth in ASTM D-1143 using the quick load test method, except that the test shall be taken to plunging failure or the capacity of the loading system. Testing equipment and measuring systems shall conform to ASTM D-1143, except that the loading system shall be capable of applying 150% of the ultimate pile capacity as stated in the contract documents, and that a load cell and spherical bearing plate shall be used. The apparatus shall be constructed to allow the various increments of the load to be placed gradually, without causing vibration to the test pile. The Contractor shall submit to the Engineer for approval working drawings of the loading apparatus in accordance with Article 1.05.02. When the approved method requires the use of tension (reaction) piles, the tension piles, when feasible, shall be of the same type and diameter as the production piles, and shall be driven in the location of permanent piles except that timber or tapered piles installed in permanent locations shall not be used as tension piles.

The top elevation of the test pile shall be determined immediately after driving and again just before load testing to check for heave. Any pile which heaves more than 1/4 inch (6 millimeters) shall be redriven or jacked to the original elevation prior to testing. Unless otherwise specified in the contract, a minimum 3-day waiting period shall be observed between the driving of any anchor piles or the load test pile and the commencement of the load test.

On completion of the load testing, any test or anchor piling not a part of the finished structure shall be removed or cut off at least 1 foot (300 millimeters) below either the bottom of footing or the finished ground elevation, if not located within the footing area.

(d) Dynamic Pile Driving Analysis (PDA) Test: Dynamic measurements following procedures set forth in ASTM D-4945 will be taken during the driving of piles designated as dynamic monitoring test piles. The Contractor shall employ a qualified specialty Consultant, which has successfully completed no less than ten

dynamic pile driving tests, to perform the testing and report preparation for all Dynamic Pile Driving Analysis (PDA) Tests to be performed.

At least thirty days prior to driving the test piles the Contractor shall submit to the Engineer for review and approval the qualified specialty consultant, as well as the complete installation, and testing procedures. The submittal shall include all necessary pile driving equipment and support facilities to drive the piles to capacities and depths shown on the plans within allowable stress limits. As part of the submittal the Contractor's Consultant shall perform a wave equation analyses, and a summary report confirming that the pile driving system proposed by the Contractor can meet the capacity, driving resistance and allowable stress limits.

All equipment necessary for the dynamic monitoring of the piles such as gages, cables, etc., shall be furnished by the Contractor's Consultant. The equipment shall conform to the requirements of ASTM D-4945, Standard Test Method for High Strain Dynamic Testing of Piles, and be capable of testing the pile to one and one-half times the ultimate pile capacity. An experienced engineer, who has successfully completed no less than ten dynamic pile driving tests, shall operate the Pile Driving Analyzer in the field. The Contractor shall furnish a shelter within 100 feet (30 meters) of test location(s) to protect the dynamic test equipment from the elements. The shelter shall be a minimum floor size of 400 square feet (40 square meters), with a minimum ceiling height of 7 feet (2 meters), and an inside temperature maintained between 50° and 85°F (10° and 29°C).

The Contractor shall provide power to the test pile locations for the duration of the dynamic testing. The power supply shall consist of a power source providing 115-Volt alternating current with a frequency of 60 Hz and a minimum of 2 kilowatts. If field generators are used as the power source, provide functioning meters to monitor power voltage and frequency. Direct current welders or non-constant power sources are unacceptable.

Prior to lifting the pile to be dynamically tested, the Contractor shall provide as a minimum 3 feet (1 meter) of clear access to 180 degree opposite faces of the pile for pile preparation. The Contractor or its Consultant shall then drill and prepare holes in the pile for gage attachment.

The Contractor or its Consultant shall attach the gages to the pile before driving the piles. Pile driving shall be performed using routine pile installation procedures. When the level of the gages is within 1 foot (300 millimeters) of the ground surface, or obstruction, driving shall be halted to remove the gages from the pile. If additional driving is required, the pile shall be spliced and gages shall be reattached to the head of the next pile segment.

With the dynamic testing equipment attached, the Contractor shall drive the pile to the design penetration depth or to a depth determined by the Engineer. The Engineer will use the ultimate pile capacity estimates at the time of driving and/or restriking from dynamic test methods to determine the required pile penetration depth for the ultimate pile capacity. The stresses in the piles will be monitored during driving with the dynamic test equipment to ensure that the actual driving stresses do not exceed the maximum allowed values. If necessary, the Contractor

shall reduce the driving energy transmitted to the pile by using additional cushions or reducing the energy output of the hammer in order to maintain driving stresses below the maximum values. If non-axial driving is indicated by dynamic test equipment measurements, the Contractor shall immediately realign the driving system.
After the initial drive of the pile, the Contractor shall wait 24 hours, or the time specified in the contract documents, and restrike the dynamic monitoring test pile with the dynamic testing instruments attached. A cold hammer shall not be used for the restrike. The hammer shall be warmed up before restrike begins by applying at least 20 blows to another pile. The maximum amount of penetration required during restrike shall be 6 inches (150 millimeters), or 50 hammer blows, whichever occurs first.

The Contractor's Consultant shall provide preliminary estimates of pile capacity of the test pile to the Engineer within 24 hours of the restrike of each tested pile. The Contractor's Consultant shall also prepare and submit a written report within 5 calendar days of the completion of the testing. This report shall contain a discussion of the pile capacity obtained from the dynamic testing. CAPWAP analyses of the dynamic testing data shall be performed on data obtained at the end of initial driving and the beginning of restrike. The Engineer may request additional analyses at selected pile penetration depths. The report shall also discuss hammer and driving system performance, driving stress levels, and pile integrity. The report is to be prepared, signed, sealed and dated by a Connecticut licensed Professional Engineer. No production piles can be driven until the report has been submitted and approved by the Engineer.

4. Test Piles and Order Lists: Test piles shall be driven at the locations shown on the plans and to the penetration depths specified by the Engineer. Test piles shall be driven to a driving resistance established by the Engineer at the estimated pile toe elevation. The Contractor shall excavate the ground at each test pile to the elevation of the bottom of the footing before the pile is driven. All test piles shall be driven with impact hammers unless specifically stated otherwise in the plans. In general, the specified length of test piles will be greater than the estimated length of production piles in order to provide for variation in soil conditions. The driving equipment used for driving test piles shall be identical to the equipment proposed for driving the production piling. Approval of driving equipment shall conform to the requirements of these Specifications.

Test piles that do not attain the specified driving resistance at a depth of 6 inches (150 millimeters) above the estimated pile tip elevation, or are specified as a dynamic monitoring pile, shall be redriven after being allowed to set up. The minimum time period before restrike shall be 24 hours, or as specified in the contract documents. A cold hammer shall not be used for the restrike. The hammer used shall be warmed up by applying at least 20 blows to another pile.

Unless otherwise specified in the contract documents, the Contractor shall not order piling to be used in the permanent structure until test pile data has been reviewed and pile order lengths are authorized by the Engineer. The Engineer will provide the pile order list after completion of the test pile(s) and dynamic pile driving analysis (PDA) tests and/or pile loading tests specified in the contract documents.

When no test piles are specified for a substructure, the estimated pile lengths in the contract documents are taken as the pile order length.

The lengths given in the order list will be based on the lengths which are assumed after cutoff to remain in the completed structure. The Contractor shall, without added compensation, increase the lengths to provide for fresh heading and for such additional length as may be necessary to suit the Contractor's method of operation.

5. Pile Preparation and Driving: The heads of all piles shall be plane and perpendicular to the longitudinal axis of the pile before the helmet is attached. Approval of a pile hammer relative to driving stress damage shall not relieve the Contractor of responsibility for piles damaged because of misalignment of the leads, failure of cushion materials, failure of splices, malfunctioning of the pile hammer, or other improper construction methods. Piles damaged for such reasons shall be rejected and replaced at the Contractor's expense when the Engineer determines that the damage impairs the strength of the pile.

If it becomes necessary and is authorized by the Engineer to resort to jetting, spudding or pre-holing — and further, if no contract bid price is asked for in the proposal for jetting, spudding, or pre-holing — such work will be paid for as "extra work" in accordance with Articles 1.04.05 and 1.09.04.

The use of a hammer with a greater mass, or the use of piles manufactured or designed with pile tips of a nature to provide for better penetration such as but not limited to composite shells, tapered sections or H-pile sections, shall not be considered as extra work. Authorized point reinforcement for piles shall be a separate item.

Piles for exposed pile bents shall be driven with pile driver leads and templates. They shall be of rigid design and construction and shall maintain the required position and alignment of the piles within the tolerances hereinafter specified. Templates shall be anchored or spudded into position, shall be capable of guiding all piles required for the bent and shall remain in place until all the piles in the bent are driven.

(a) Location and Alignment Tolerance: Piles shall be driven with a variation of not more than 1/4 inch per foot (20 millimeters/meter) from the vertical or from the batter line indicated, except that piles for trestle bents shall be so driven that the cap may be placed in its proper location without inducing excessive stresses in the piles. Upon completion of driving and released from leads, exposed piles such as in bents shall not have a variation of more than 2 inches (50 millimeters) at the cut-off elevation from the position shown on the plans. Unless otherwise permitted in writing by the Engineer, failure to meet this tolerance shall be cause for rejection. Other foundation piles shall not be out of the position shown on the plans more than 6 inches (150 millimeters) after driving. The Engineer may require that driving be stopped in order to check the pile alignment. Pulling laterally on piles to correct misalignment, or splicing a properly aligned section on a misaligned section shall not be permitted.

If the location and/or alignment tolerances specified are exceeded, the extent of overloading shall be evaluated by the Engineer. If in the judgment of the Engineer, corrective measures are necessary, suitable measures shall be designed and constructed by the Contractor.

(b) Heaved Piles: Level readings to measure pile heave after driving shall be made by the Contractor at the start of pile driving operations and shall continue until the Engineer determines that such checking is no longer required. Level readings shall be taken immediately after the pile has been driven and again after piles within a radius of 15 feet (4.5 meters) have been driven. If pile heave is observed, the Contractor shall take accurate level readings referenced to a fixed datum on all piles immediately after installation and periodically thereafter as adjacent piles are driven to determine the pile heave range. All piles that have been heaved more than ¼ inch (6 millimeters) shall be redriven at the Contractor's cost, to the required resistance or penetration. Concrete shall not be placed in pile casings until pile driving has progressed beyond a radius of 15 feet (4.5 meters) from the pile to be concreted. If pile heave is detected for pipe or shell piles which have been filled with concrete, the piles shall be redriven to original position after the concrete has obtained sufficient strength and a proper hammer-pile cushion system, satisfactory to the Engineer, is used.

(c) Installation Sequence: The order of placing individual piles in pile groups shall be either starting from the center of the group and proceeding outwards in both directions or starting at the outside row and proceeding progressively across the group.

6. Unsatisfactory Piles: The method used in driving piles shall not subject the piles to excessive or undue abuse producing crushing and spalling of concrete, injurious splitting, splintering, and brooming of the wood, or deformation of the steel. Misaligned piles shall not be forced into proper position. Any pile damaged during driving by reason of internal defects, or by improper driving, or driven out of its proper location, or driven below the designated cutoff elevation, shall be corrected by the Contractor by a method approved by the Engineer.

Piles which have been bent during installation shall be considered unsatisfactory unless the ultimate capacity is proven by load tests performed at the Contractor's expense. If such tests indicate inadequate capacity, corrective measures as determined by the Engineer shall be taken, such as use of bent piles at reduced capacity, installation of additional piles, strengthening of bent piles, or replacement of bent piles.

A concrete pile will be considered defective if a visible crack, or cracks, appears around the entire periphery of the pile, or if any defect is observed which, as determined by the Engineer, affects the strength or life of the pile.

7. Splicing Piles and Extensions: Full length piles shall be used when practicable; but if splices cannot be avoided, piles or shells for cast-in-place piles may be spliced in accordance with the requirements of the plans. Piles shall not be spliced except with the approval of the Engineer. Splices in excess of two per pile for timber, steel and cast-in-place concrete piles will not be permitted except with special permission of the Engineer. Only one splice per pile will be permitted in precast concrete or prestressed concrete piles. In the absence of splice details in the plans, piles or shells for cast-in-place concrete piles shall be spliced in accordance with the pile or shell manufacturer's recommendations, subject to the approval of the Engineer. Working Drawings for prefabricated splicing devices and their method of installation shall be submitted to the Engineer for review. All seams, joints and splices shall develop the full strength of the pile.

8. Point Reinforcement: When directed by the Engineer, the contractor shall point-reinforce piles. Such point-reinforcement shall be in accordance with the plans or as directed.

9. Cutoff Lengths: The pile head of all permanent piles and pile casings shall be cutoff at the elevation shown on the plans or as ordered by the Engineer. All cutoff lengths shall become the property of the Contractor, and shall be removed by the Contractor from the site of the work.

10. Painting Steel Piles and Steel Pile Shells: When steel piles or steel pile shells extend above the ground surface or water surface, they shall be painted as specified elsewhere in the contract documents or as ordered by the Engineer. This protection shall extend from an elevation 2 feet (600 millimeters) below the ground or water surface to the top of the exposed steel.

11. Welding on Piles: When required or permitted, all welding on piles shall be done in accordance with the requirements of the current AWS Structural Welding Code.

7.02.04—Method of Measurement

1. Steel Piles-Timber Piles-Precast Concrete Piles: The length of (type) piles which will be the basis for the pay computation to be included under the item of furnishing (type) piles, shall be number of linear feet (meters) of (type) piles authorized by the Engineer or actually furnished by the Contractor, whichever is the lesser amount.

Length of pile cutoffs previously paid for under authorized lengths of piles and subsequently incorporated into the work will not be measured for payment.

The work, materials, tools, equipment and labor incidental to the disposal of pile cutoffs will not be measured for payment.

The amounts to be included under the item for driving (type) piles will be the number of linear feet (meters) of piles actually driven and accepted in the completed structure.

2. Cast-in-Place Concrete Piles: The amount to be included under the item of cast-in-place concrete piles shall be the number of linear feet (meters) of piles actually driven and accepted in place in the completed structure.

Cut-off materials from shells shall remain the property of the Contractor. They will be paid for in accordance with the unit cost applying in the Contractor's bill or bills for such shells, except that no payment will be made of material cut off from shells furnished by the Contractor in excess of the ordered length. The unit of measurement will be the unit applying in the Contractor's bill or bills for such shells. Material cut off from shells furnished by the Contractor in lengths in excess of those ordered by the Engineer will not be measured for payment hereunder. The work, materials, tools, equipment and labor incidental to the disposal of cutoffs will not be measured for payment.
Reinforcement, if required in cast-in-place concrete piles, will not be measured for payment.

3. Prestressed Concrete Piles (Pretensioned): The length of the prestressed concrete piles, which will be the basis for the pay computation, shall be the number of linear feet (meters) of piles authorized by the Engineer or actually furnished by the Contractor, whichever is the lesser amount. The length of any specified pile tip protruding from the concrete will be included in the length measured for payment.

Also included in the length measured for payment will be the length of precast pile extensions ordered by the Engineer. Not to be included, however, is the length of pile extension furnished in excess of the ordered length. The length of projection dowels shall not be included in the length measured for payment.

Extensions to prestressed concrete piles which are poured monolithically with the footing or pier cap will be paid for at the Contract unit prices for the several items involved, which prices shall be full compensation for all materials, tools, equipment and labor necessary to the completion of the work.

Cut-offs shall not be used for pile extension. The work, material, tools equipment and labor incidental to the disposal of cutoffs will not be measured for payment.

The amounts to be included under the item for driving prestressed concrete piles shall be the number of linear feet (meters) of piles actually driven and accepted in the completed structure.

4. Test Piles: The amounts to be included under the respective items for test piles, of the type and length specified, shall be the number of test piles actually driven and accepted. Lengths of test piles ordered by the Engineer in excess of the length or lengths specified in the contract will be measured for payment by the actual number of linear feet (meters) ordered, furnished and accepted by the Engineer. Driving of such pile extensions will be measured for payment by the actual length driven and left in place.

Authorized splices performed on test piles will be measured for payment by the number of authorized splices actually completed and accepted. Splicing of test piles shall not be considered as authorized splices when such splicing is done to complete piles to the test pile length specified in the contract.

5. Static Load Tests: The amount to be included under the item of static loading tests shall be the actual number of static load tests completed and accepted.

6. Dynamic Pile Driving Analysis (PDA) Test: The amount to be included under this item shall be the actual number of piles which are driven and restruck with dynamic monitoring equipment attached, completed and accepted
.

7. Splices: The amount to be included under the items for splicing timber, steel, cast-in-place concrete, precast concrete and prestressed concrete piles (pretensioned) shall be the number of authorized pile splices actually completed and accepted.
The splicing of timber and steel piles, steel shells for cast-in-place concrete piles, precast concrete piles and prestressed concrete piles (pretensioned) shall not be considered as authorized splices when such splicing is performed to complete piles to the order lengths, as defined in Subarticle 7.02.03-7, or when the furnished lengths of such piles are less than the order lengths approved by the Engineer.

8. Point Reinforcement for Piles: The amount to be included under the item of "Point Reinforcement for Piles" for the type of piles specified shall be the number of authorized reinforced points actually completed and accepted.

9. Pre-Augering of Piles: The amount to be included under the item “Pre-Augering of Piles” shall be the number of linear feet (meters) of pre-augering completed and accepted by the Engineer.

7.02.05--Basis of Payment: This work will be paid for as follows:

1. Steel Piles: Payment for furnishing steel piles of the lengths authorized will be at the Contract unit price per pound (kilogram) for "Furnishing Steel Piles," which price shall include furnishing, delivery, storage and handling, and all materials, equipment, tools and labor incidental thereto. The weight (mass) of steel pile caps will be included with and paid for under this item.

Payment for driving steel piles will be at the contract unit price per linear foot (meter) for "Driving Steel Piles," complete in place, which price shall include all materials, equipment, tools and labor incidental thereto.

2. Timber Piles: Payment for furnishing timber piles or treated timber piles, up to a length 10 feet (3 meters) greater than that specified on the plans or in the proposal form, will be at the Contract unit price per foot (meter) for "Furnishing Timber Piles (‘ Length)" and "Furnishing Treated Timber Piles (‘ Length)," respectively, which price shall include furnishing, delivery, peeling, storage and handling, and all materials, equipment, tools and labor incidental thereto.

In case the length of any piles finally ordered is more than 10 feet (3 meters), but less than 20 feet (6 meters), greater than the length specified on the plans or proposal form, payment for furnishing such piles shall be at a price per linear foot (meter) equal to the original contract price, plus 20 percent thereof.

In case the length of any piles finally ordered is 20 feet (6 meters) or more greater than the length specified on the plans or proposal form, payment for furnishing such piles shall be at a price per linear foot (meter) equal to the original contract price plus 40 percent thereof.

Payment for driving timber piles or treated timber piles will be at the contract unit price per linear foot (meter) for "Driving Timber Piles" and "Driving Treated Timber Piles," respectively, complete in place and regardless of length, which price shall include all materials, equipment, tools and labor incidental thereto.

3. Cast-in-Place Concrete Piles: Payment for cast-in-place concrete piles will be at the contract unit price per linear foot (meter) for "Cast-in-Place Concrete Piles," complete in place, including all materials, equipment, tools and labor incidental thereto.

Cut-off materials from shells shall remain the property of the Contractor. They will be paid for in accordance with the unit cost applying in the Contractor's bill or bills for such shells, except that no payment will be made for material cut off from shells furnished by the Contractor in excess of the ordered length.

4. Prestressed Concrete Piles: Payment for furnishing prestressed concrete piles, of the lengths required, will be at the contract unit price per linear foot (meter) for "Furnishing Prestressed Concrete Piles" of the type and size as shown on the plans, which price shall include furnishing, delivery, storage and handling, and all materials, equipment, tools and labor incidental thereto.

Payment for driving prestressed concrete piles will be at the contract unit price per linear foot (meter) for "Driving Prestressed Concrete Piles," complete in place, which price shall include all material, equipment, tools and labor incidental thereto. Also included shall be all work involved in cutting piles to the direct cut-off elevation.

5. Test Piles: Test piles will be paid for at the contract unit price each for "Test Pile," of the type and length specified, which price shall constitute the complete compensation for furnishing and driving test piles and shall include all materials, equipment, tools and labor incidental thereto. Authorized splices to test piles will be paid for at 200 percent of the contract unit price bid for Splicing Timber Piles, Splicing Steel Piles, Splicing Cast-in-Place Piles or Splicing Prestressed Concrete Piles, whichever type of test pile the splice has been performed on; and such payment shall be for all costs including materials, equipment, tools and labor incidental thereto.

Extension to test piles in excess of the specified length will be paid for on the following basis, which shall include all equipment, tools, splices, labor and work incidental thereto.

(a) Timber Test Piles: Extensions will be paid for at 125 percent of the contract unit price per linear foot (meter) for "Furnishing Timber Piles," of the shortest length specified in the proposal, and at 125 percent of the contract unit price per linear foot (meter) for "Driving Timber Piles."

(b) Steel Test Piles: Extensions will be paid for at 125 percent of the contract unit price per pound (kilogram) for "Furnishing Steel Piles" and at 125 percent of the contract unit price per linear foot (meter) for "Driving Steel Piles."

(c) Cast-in-Place Concrete Test Piles: Extensions will be paid for at 125 percent of the contract unit price per linear foot (meter) for "Cast-in-Place Concrete Piles." Cut-off materials from shells will be paid for as provided in Subarticle 7.02.05-3.

(d) Prestressed Concrete Test Piles: Extensions will be paid for at 125 percent of the contract unit price per linear foot (meter) for "Furnishing Prestressed Concrete Piles," and at 125 percent of the contract unit price per linear foot (meter) for "Driving Prestressed Concrete Piles."

6. Static Load Tests: Loading tests will be paid for at the contract unit price each for "Pile Loading Test," which price shall include all expenses incidental to loading the pile or group of piles and removing the load, platform, etc., upon completion of the test.

7. Dynamic Pile Driving Analysis (PDA) Test: Dynamic monitoring will be paid for at the contract unit price each for “Dynamic Pile Driving Analysis (PDA) Test” which price shall include complete compensation for each pile tested using a pile driving analyzer during driving and restrike, including all materials, equipment, tools and labor incidental thereto, as well as providing preliminary and summary report(s).

8. Splices: Authorized splices in timber, steel, cast-in-place piles, precast concrete and prestressed concrete piles will be paid for at the contract unit price each for "Splicing Timber Piles," "Splicing Steel Piles," "Splicing Cast-in-Place Concrete Piles," "Splicing Precast Concrete Piles," "Splicing Prestressed Concrete Piles," respectively, which price shall include all materials, except as otherwise noted, and all equipment, tools and labor incidental thereto. In the absence of such prices, authorized splices will be paid for as extra work.

9. Trimming and Cutting: There shall be no direct compensation for cutting off timber, steel, precast concrete or prestressed concrete piles and shells for cast-in-place concrete piles as ordered; but the cost thereof shall be considered as included in the cost of the pile items.

10. Point Reinforcement for Piles: Authorized points for pointing and reinforcing piles will be paid for at the contract unit price each for "Point Reinforcement for Timber Piles," or "Point Reinforcement for Steel Piles," respectively, whichever applies, which price shall include all materials, equipment, tools and labor incidental thereto. In the absence of such prices, authorized points will be paid for as extra work.

11. Pre-Augering of Piles: Payment for “Pre-Augering of Piles” will be at the contract unit price per linear foot (meter) for “Pre-Augering of Piles,” which price shall include which price shall include all materials, and all equipment, tools and labor incidental thereto.

12. Underground Obstructions: If the required pile penetration is not reached due to the presence of underground obstructions which are not the result of the Contractor's operations but are due to the presence of earlier construction at the site, then the cost of removing these obstructions and back-filling the area will be paid for as extra work unless otherwise specified in the contract documents.

13. Painting: There will be no additional payment for painting steel piles and steel pile shells, but the cost thereof shall be considered as included in the cost of furnishing and driving the piles.

14. Disposal of Pile Cutoffs: All costs incidental to the disposal of cutoff material will be included in the price of furnishing of the type of pile specified.

Pay Item	Pay Unit
Furnishing (Type) Piles (Lengths)	lb. (kg)
Driving (Type) Piles	l.f. (m)
Test Pile (Type-Length)	ea. (ea.)
Splicing (Type) Piles	ea. (ea.)
Point Reinforcement for (Type) Piles	ea. (ea.)
Pile Loading Test	ea. (ea.)
Dynamic Pile Driving Analysis (PDA) Test	ea. (ea.)
Pre-Augering of Piles	l.f. (m)

CONNECTICUT
SUPPLEMENTAL SPECIFICATION
SECTION 8.22
TEMPORARY PRECAST CONCRETE BARRIER CURB

Article 8.22.04 – Method of Measurement:

Add the following sentence to the end of the second paragraph:

"Relocation of Temporary Precast Concrete Barrier Curb for access to the work area or for the convenience of the Contractor shall be considered incidental to Maintenance and Protection of Traffic and will not be measured for payment."

CONNECTICUT
SUPPLEMENTAL SPECIFICATION
SECTION 9.10
METAL BEAM RAIL

Article 9.10.04 – Method of Measurement

Subarticle 1 – Metal Beam Rail (Type)

Delete the only sentence and replace with the following:

The length of metal beam rail measured for payment will be the number of linear feet (meters) of accepted rail of the type or designation installed, including radius rail other than Curved Guide Rail Treatment, measured along the top of rail between centers of end posts in each continuous section.

CONNECTICUT
SUPPLEMENTAL SPECIFICATION
SECTION 9.18
THREE CABLE GUIDE RAILING
(I-BEAM POSTS) AND ANCHORAGES

9.18.03 – Construction Methods:

In the 10th paragraph, replace "MIL" with "MILSPEC."

CONNECTICUT
SUPPLEMENTAL SPECIFICATION
SECTION 9.22
BITUMINOUS CONCRETE SIDEWALK
BITUMINOUS CONCRETE DRIVEWAY

9.22.03 – Construction Methods:

Replace the first paragraph with the following:

"**1. Excavation:** Excavation, including saw cutting, removal of any existing sidewalk, or driveway, shall be made to the required depth below the finished grade, as shown on the plans or as directed by the Engineer. All soft and yielding material shall be removed and replaced with suitable material."

9.22.05 – Basis of Payment:

Replace the only paragraph with the following:

"This work will be paid for at the contract unit price per square yard (square meter) for "Bituminous Concrete Sidewalk" or "Bituminous Concrete Driveway," as the case may be, complete in place, which price shall include all saw cutting, excavation as specified above, backfill, disposal of surplus material, gravel or reclaimed miscellaneous aggregate base, and all equipment, tools, labor and materials incidental thereto."

CONNECTICUT
SUPPLEMENTAL SPECIFICATION
SECTION 9.44
TOPSOIL

Add the following paragraph to the beginning of article 9.44.03 – Construction Methods:

"The Contractor shall notify the Engineer of the location of the topsoil at least 15 calendar days prior to delivery. The topsoil and its source shall be inspected and approved by the Engineer before the material is delivered to the project. Any material delivered to the project, which does not meet specifications or which has become mixed with undue amounts of subsoil during any operation at the source or during placing and spreading, will be rejected and shall be replaced by the Contractor with acceptable material."

CONNECTICUT
SUPPLEMENTAL SPECIFICATION
SECTION 9.49
FURNISHING, PLANTING and MULCHING
TREES, SHRUBS, VINES and GROUND COVER PLANTS

9.49.03 – Construction Methods:

Replace subsection 5. Pits with the following:

"5. Pits: The pit diameters shall be twice the diameter of the root-spread or container diameters, and shall be 2- inches (50 millimeters) less than the height of the rootball measured from the bottom of the ball to the root collar. (i. e. A 12-inch (300 millimeters) measurement between the root collar and the bottom of the rootball will require a 10-inch (250 millimeters) deep pit). Any excavation in excess of that required shall be replaced with planting soil and compacted to the satisfaction of the Engineer."

Add the following sentence to subsection 6. Obstructions Below Ground:

"If removal of obstructions results in a deeper hole than needed for planting, backfill material shall be added and compacted to the satisfaction of the Engineer."

Replace subsection 7. Preparation of Backfill with the following:

"**7. Backfill:** Backfill shall conform to M.13.01-1 Planting Soil."

Replace subsection 8. Setting Plants with the following:

"**8. Setting Plants:** All plants shall be plumb and at a level that is 2-inches (50 millimeters) higher than the surrounding ground. Backfill material for all plants shall be thoroughly and properly settled by firming or tamping. Thorough watering shall accompany backfilling. Saucers capable of holding water shall be formed at individual plants (exclusive of plant beds) by placing ridges of planting soil around each, or as directed by the Engineer.

a. Balled and Burlapped plants: Plants shall be handled in such manner so that the soil will not be loosened from the roots inside of the ball. Carefully place the plant into the prepared pits and backfill with planting soil to one - half the depth of the pit, thoroughly tamp to the satisfaction of the Engineer around the ball. Fill the remaining area of the pit with water. Once water has completely drained, loosen the burlap and peel down the top one third. If wire baskets are used, cut and bend down the top third of the basket. Roots that have been wrapped around the ball within the burlap shall be straightened and the remainder of the pit filled with planting soil tamped to ensure that no air pockets remain.

b. Container Grown Plants: Carefully remove the plant from the container over the prepared pits. Gently loosen the soil and straighten all roots as naturally as possible. Place into the bottom of the pit. Backfill with planting soil to one - half the depth of the pit. Thoroughly tamp to the satisfaction of the Engineer. Fill remaining area of the pit with water. Once water has completely drained fill the remainder of the pit with planting soil tamped to ensure that no air pockets remain.

c. Bare-roots Plants: Carefully spread roots as naturally as possible and place into the bottom of the pit. All broken or frayed roots shall be cleanly cut off. Backfill with planting soil to one - half the depth of the pit. Thoroughly tamp to the satisfaction of the Engineer. Fill remaining area of the pit with water. Once water has completely drained fill the remainder of the pit with planting soil tamped to ensure that no air pockets remain."

Replace subsection 10. Watering with the following:

"**10. Watering:** All plants shall be watered upon setting and as many times thereafter as conditions warrant.

The following is a guide for minimum requirements:

Trees:
2 ½" Caliper and less – Fifteen (15) gallons each.
3" to 5" Caliper – Twenty (20) gallon each.
5 ½" Caliper and above – Twenty-five (25) gallon each.
Shrubs:
24" and less – Six (6) gallon each.
More than 24"- Ten (10) gallon each.
Vines, Perennials, and Ornamental Grasses – Three (3) gallons each.
Groundcovers and Bulbs – Two (2) gallons per square foot.

Water shall be applied at a controlled rate and in such a manner to ensure that the water reaches the root zone (saucer) of the plant or plant bed and does not run off to adjacent areas. Watering shall be applied in a manner that does not dislodge plants, erode soil or mulch, or cause damage to saucer.

The Contractor may use slow-release, drip irrigation bags for watering in accordance with manufacturer's instructions. The use of these portable/temporary irrigation bags will require the approval of the Engineer.

Overhead hydro-seeder spray nozzles shall not be used as watering devices."

Replace subsection 17. Establishment Period with the following:

"**17. One-Year Establishment Period:** All plant material shall be subject to a One-Year Establishment Period. During this time, the Contractor shall use currently accepted horticultural practices to keep all plant material installed in a healthy, vigorous growing condition at the date of final acceptance. The date of final

acceptance shall be one full calendar year following the satisfactory completion of the planting activities as confirmed by the Engineer.

An inspection will be held one year from the date of installation with the Contractor, Engineer, and Landscape Designer to determine the acceptability of the plant establishment. An inventory of losses and rejected materials will be made and corrective and necessary clean up measures will be determined at the plant inspection."

CONNECTICUT
SUPPLEMENTAL SPECIFICATION
SECTION 9.75
MOBILIZATION

9.75.04 – Method of Measurement:

Delete the entire section and replace with the following:

This work will be measured for payment in the manner described hereinafter; however, the determination of the total contract price earned shall not include the amount of mobilization earned during the period covered by the current monthly estimate- but shall include amounts previously earned and certified for payment:

1. When the first payment estimate is made, 25 percent of the lump sum bid price for this item or 2.5 percent of the total original contract price, whichever is less, shall be certified for payment.

2. When the Baseline Schedule, as specified under Section 1.05.08, is accepted, 50 percent of the lump sum bid price or 5 percent of the total original contract price, whichever is less, minus any previous payments, will be certified for payment.

3. When 10 percent of the total original contract price is earned and the Baseline Schedule, as specified under Section 1.05.08, is accepted, 75 percent of the lump sum price of this item or 7.5 percent of the total original contract price, whichever is less, minus any previous payments, will be certified for payment.

4. When 30 percent of the total original contract price is earned and the Baseline Schedule, as specified under Section 1.05.08, is accepted, 100 percent of the lump sum price of this item or 10 percent of the total original contract price, whichever is less, minus any previous payments, will be certified for payment.

Upon completion of all work on the project, payment of any amount bid for mobilization in excess of 10 percent of the original contract amount will be paid.

Nothing herein shall be construed to limit or preclude partial payments otherwise provided for by the contract.

CONNECTICUT
SUPPLEMENTAL SPECIFICATION
SECTION 10.01
TRENCHING AND BACKFILLING

Article 10.01.01- Description:

In the only sentence of the first paragraph after "…satisfactory…" *add the following:* "clean-up and".

In the only sentence of the second paragraph after "…reconstruction of…" *add the following:* "bituminous, concrete and granite curbing,".

Article 10.01.05- Basis of Payment:

In the only sentence of the second paragraph after "…mulching…" *add the following:* "clean-up and". *After* "…installing…" *add the word* "curbing,".

At the end of the third paragraph, add the following: "In the absence of a "Rock in Trench Excavation" item, the work will be compensated as extra work."

In the only sentence of the sixth paragraph, after …"…unit price for 'Concrete Sidewalk'…" *add the following:* "or as extra work, if no unit price has been established."

CONNECTICUT
SUPPLEMENTAL SPECIFICATION
SECTION 10.10
CONCRETE HANDHOLE

Article 10.10.05 – Basis of Payment

Remove the words “ground wire”.

At the end of the paragraph add the following sentence:

The ground wire (bonding wire) is included in the Contract unit price under Section 10.08 – Electrical Conduit.

Add the word “Cover” *to the end of the pay item* “Cast Iron Handhole”

CONNECTICUT
SUPPLEMENTAL SPECIFICATION
SECTION 11.13
CONTROL CABLE

11.13.03 – Construction Methods:

In the 1st paragraph of subsection 2 replace "MIL" with "MILSPEC."

CONNECTICUT
SUPPLEMENTAL SPECIFICATION
SECTION 12.10
EPOXY RESIN PAVEMENT MARKINGS, SYMBOLS AND LEGENDS

12.10.03 (2) – Procedures:

Insert the following after the sixth paragraph:

The epoxy shall be uniformly applied to the surface to be marked to ensure a wet film thickness of the applied epoxy, without glass beads, of 20 mils +/- 1 mil (500 um +/- 25 um).

CONNECTICUT
SUPPLEMENTAL SPECIFICATION
SECTION M.06
METALS

Article M.06.01 – Reinforcing Steel:

Subarticle 1. Bar Reinforcement:

Delete the third paragraph and replace it with:

"Epoxy coated bar reinforcement shall conform to the requirements of ASTM A 615/A 615M, Grade 60 (420) and shall be epoxy coated to the requirements of ASTM A 775/A 775M. All field repairs of the epoxy coating shall conform to the requirements of ASTM D 3963/D 3963M."

Article M.06.02—Structural Steel and Other Structural Materials:

Delete the entire article and replace it with the following:

Article M.06.02—Structural Steel: The materials for this work shall conform to the following requirements:

1. **Structural Steel:**
   Structural steel for bridges shall conform to the designation shown on the plans. Unless otherwise indicated in the plans or specifications, structural steel for non-bridge related members or components shall conform to ASTM A709/A709M, Grade 36 (250).

   All surfaces of steel plates and shapes used in the fabrication of bridge girders shall be blast cleaned and visually inspected by the Contractor prior to any fabrication or preparation for fabrication. Blast cleaning shall conform to the requirements of SSPC-SP-6-Commercial Blast.

   All steel plates and shapes used in the fabrication of bridge girders shall be substantially free from pitting and gouges, regardless of the cause. Substantially free is defined as:
   - The measured surface area of all pits and gouges regardless of depth represent less than 1% of the surface area of theplate or shape.
   - No pit or gouge greater than 1/32 (0.08mm) inch deep.
   - No pit or gouge closer than six inches (15.25 cm) from another.

Any repair of plates or shapes will be performed in accordance with ASTM A6/A 6M.

2. **Anchor Bolts:**
Unless otherwise designated on the plans, anchor bolts, including suitable nuts and washers, shall conform to the following requirements:

Anchor bolt assemblies shall conform to the requirements of ASTM F1554, Grade 36 (250). All components of the bolt assembly shall be galvanized in conformance with ASTM A 153/A 153M.

Certified Test Reports and Material Samples: The Contractor shall submit notarized copies of Certified Test Reports in conformance with Article 1.06.07. Prior to incorporation into the work, the Contractor shall submit samples of the anchor bolt assemblies to the Engineer for testing in accordance with the latest edition of the "Schedule of Minimum Requirements for Acceptance Testing". One sample shall be submitted for each diameter, material designation, grade or coating of anchor bolt assembly.

3. **High Strength Bolts:** High strength bolts, including suitable nuts and hardened washers, shall conform to the following requirements:

   a) High strength bolts shall conform to ASTM A325 or ASTM A490 as shown on the plans. High-strength bolts used with coated steel shall be mechanically galvanized, unless otherwise specified. High-strength bolts used with uncoated weathering grades of steel shall be Type 3.

   Nuts for ASTM A325 bolts shall conform to ASTM A563, grades DH, DH3, C, C3 and D. Where galvanized high-strength bolts are used, the nuts shall be galvanized, heat treated grade DH or DH3. Where Type 3 high-strength bolts are used, the nuts shall be grade C3 or DH3.

   Nuts for ASTM A490 bolts shall conform to the requirements of ASTM A563, grades DH and DH3. Where Type 3 high-strength bolts are used, the nuts shall be grade DH3.

   All galvanized nuts shall be lubricated with a lubricant containing a visible dye of any color that contrasts with the color of the galvanizing. Black bolts must be oily to the touch when delivered and installed.

   Circular flat and square or rectangular beveled, hardened steel washers shall conform to ASTM F436. Unless otherwise specified, galvanized washers shall be furnished when galvanized high-strength bolts are specified, and washers with atmospheric corrosion resistance and weathering characteristics shall be furnished when Type 3 high-strength bolts are specified.

   Compressible-washer-type direct tension indicator washers, used in conjunction with high strength bolts, shall conform to ASTM F959. Where galvanized high-strength bolts are used, the washers shall be galvanized in accordance with ASTM B695, Class 50. Where Type 3 high-strength bolts are used, the washers shall be galvanized in accordance with ASTM B695, Class 50 and coated with epoxy.

b) **Identifying Marks:** ASTM A325 for bolts and the specifications referenced therein for nuts require that bolts and nuts manufactured to the specification be identified by specific markings on the top of the bolt head and on one face of the nut. Head markings must identify the grade by the symbol "A325", the manufacturer and the type, if Type 2 or 3. Nut markings must identify the grade, the manufacturer and if Type 3, the type. Markings on direct tension indicators must identify the manufacturer and Type "325". Other washer markings must identify the manufacturer and if Type 3, the type.

   ASTM A490 for bolts and the specifications reference therein for nuts require that bolts and nuts manufactured to the specifications be identified by specific markings on the top of the bolt head and on one face of the nut. Head markings must identify the grade by the symbol "A490", the manufacturer and the type, if Type 2 or 3. Nut markings must identify the grade, the manufacturer and if Type 3, the type. Markings on direct tension indicators must identify the manufacturer and Type "490". Other washer markings must identify the manufacturer and if Type 3, the type.

c) **Dimensions:** Bolt and nuts dimensions shall conform to the requirements for Heavy Hexagon Structural Bolts and for Heavy Semi-Finished Hexagon Nuts given in ANSI Standard B18.2.1 and B18.2.2, respectively.

d) **Galvanized Bolts:** Galvanized bolts shall conform to ASTM A325, Type 1. The bolts shall be hot-dip galvanized in accordance with ASTM A153, Class C or mechanically galvanized in accordance with ASTM B695, Class 50. Bolts, nuts, and washers of any assembly shall be galvanized by the same process. The nuts shall be overtapped to the minimum amount required for the fastener assembly, and shall be lubricated with a lubricant containing a visible dye so a visual check can be made for the lubricant at the time of field installation. Galvanized bolts shall be tension tested after galvanizing. ASTM A 490 bolts shall not be galvanized.

e) **Test Requirements:** The maximum hardness of A325 bolts 1" or less in diameter shall be 33 HRC.

   Plain, ungalvanized nuts shall have a minimum hardness of 89 HRB.

   Proof load tests, in accordance with the requirements of ASTM F606 Method 1, shall be required for the bolts. Wedge tests of full-size bolts are required in accordance with Section 8.3 of ASTM A325. Galvanized bolts shall be wedge tested after galvanizing. Proof load tests of ASTM A563 are required for nuts. Proof load tests for nuts used with galvanized bolts shall be performed after galvanizing, overtapping and lubricating.

Rotational-capacity tests are required and shall be performed on all plain or galvanized (after galvanizing) bolt, nut and washer assemblies by the manufacturer or distributor prior to shipping and by the Contractor at the job site.

The thickness of galvanizing on bolts, nuts and washers shall be measured. On bolts, it shall be measured on the wrench flats or on top of the bolt head, and on nuts it shall be measured on the wrench flats.

f) Certified Test Reports and Materials Certificates: The Contractor shall submit notarized copies of Certified Test Reports and Materials Certificates in conformance with Article 1.06.07 for fastener assemblies. In addition the Certified Test Reports and Materials Certificates shall include the following:

a. Mill test reports shall indicate the place where the material was melted and manufactured.

b. Test reports for proof load tests, wedge tests, and rotational-capacity tests shall indicate where the tests were performed, date of tests, location of where the components were manufactured and lot numbers.

c. The test report for galvanized components shall indicate the thickness of the galvanizing.

g) Material Samples: Prior to incorporation into the work, the Contractor shall submit samples of the bolt assemblies to the Engineer for testing in accordance with the latest edition of the "Schedule of Minimum Requirements for Acceptance Testing". Samples shall be submitted for each diameter, length, material designation, grade, coating and manufacturer of bolt assembly.

4. Welded Stud Shear Connectors:

a) Materials: Stud shear connectors shall conform to the requirements of ASTM A 108, cold-drawn bar, Grades 1015, 1018 or 1020, either semi- or fully-killed. If flux-retaining caps are used, the steel for the caps shall be of a low carbon grade suitable for welding and shall comply with ASTM A 109.

Stud shear connectors shall be of a design suitable for electrically end-welding to steel with automatically timed stud welding equipment. The studs shall be of the sizes and dimensions noted on the plans. Flux for welding shall be furnished with each stud, either attached to the end of the stud or combined with the arc shield for automatic application in the welding operation. Each stud shall be furnished with a disposable ferrule of sufficient strength to remain intact during the welding operation and not crumble or break; it shall not be detrimental to the weld or create excessive slag.

Tensile properties, as determined by tests of bar stock after drawing or of finished studs, shall conform to the following requirements in which the yield strength is as determined by the 0.2% offset method:

Tensile strength (min.)	60,000 psi (415 megapascals)
Yield strength (min.)	50,000 psi (345 megapascals)
Elongation (min.)	20% in 2 inches (50 millimeters)
Reduction of area (min.)	50%

b) Test Methods: Tensile properties shall be determined in accordance with the applicable sections of ASTM A 370. Tensile tests of finished studs shall be made on studs welded to test plates using a test fixture similar to that shown in Figure 7.2 of the current AASHTO/AWS D1.5 – Bridge Welding Code. If fracture occurs outside of the middle half of the gage length, the test shall be repeated.

c) Finish: Finished studs shall be of uniform quality and condition, free from injurious laps, fins, seams, cracks, twists, bends or other injurious defects. Finish shall be as produced by cold-drawing, cold-rolling or machining.

d) Certified Test Reports and Materials Certificates: The Contractor shall submit a certified copy of the in-plant quality control test report in conformance with Article 1.06.07. The Contractor shall submit a Materials Certificate in conformance with Article 1.06.07 for the welded studs.

e) Sample Materials for Testing: Prior to incorporation into the work, the Contractor shall submit samples of the stud shear connectors to the Engineer for testing in accordance with the latest edition of the "Schedule of Minimum Requirements for Acceptance Testing". One sample shall be submitted for each diameter and length of welded stud.

CONNECTICUT
SUPPLEMENTAL SPECIFICATION
SECTION M.08
DRAINAGE

Delete the entire Section and replace with the following:

General
M.08.01 – Pipe
Iron/Steel
1. **Cast Iron Pipe**
2. **Coated Corrugated Metal Pipe and Coated Corrugated Metal Pipe Elbows**
3. **Perforated or Plain Coated Metal Pipe for Underdrains or Outlets**
4. **Coated Corrugated Metal Pipe Arches**
5. **Corrugated Structural Plates and Bolts**
6. **Metal Culvert Ends**

Concrete
7. **Reinforced Concrete Pipe**
8. **Reinforced Concrete Elliptical Pipe**
9. **Perforated Reinforced Concrete Pipe for Underdrains and Outlets**
10. **Slotted Drain Pipe**
11. **Reinforced Concrete Culvert Ends**

Aluminum
12. **Corrugated Aluminum Pipe**
13. **Corrugated Aluminum Pipe for Underdrains and Outlets**
14. **Corrugated Aluminum Pipe Arches**

Sealers/Gaskets
15. **Cold-Applied Bituminous Sealer**
16. **Preformed Plastic Gaskets**
17. **Flexible, Watertight, Rubber-Type Gaskets**

Plastic
18. **Corrugated Polyethylene Pipe**
19. **Geotextiles**
20. **Polyvinyl Chloride Plastic Pipe**
21. **Polyvinyl Chloride Gravity Pipe**

M.08.02 – Catch Basins, Manholes, and Drop Inlets
M.08.03 – Aggregates
1. **Bedding Material**
2. **Aggregates for Underdrains**

M.08.01 – Pipe

General

The Contractor shall submit manufacturer's material certifications for all metal and plastic pipes other than PVC, metal pipe-arches, metal fittings and metal coupling bands in accordance with Section 1.06.07.

IRON/STEEL

1. **Cast Iron Pipe:** This material shall conform to the requirements of AASHTO M 64 for Extra-Heavy Cast Iron Culvert Pipe.

2. **Coated Corrugated Metal Pipe and Coated Corrugated Metal Pipe Elbows:** This material shall conform to the following:

Pipe fabricated from zinc-coated steel sheet and aluminum-coated (Type 2) steel sheet must conform to AASHTO M 36, Type 1 or IR.

Pipe fabricated from metallic-coated and polymer-precoated steel sheet must conform to AASHTO M 245, Type 1.

Unless otherwise indicated on the plans, the corrugation size and sheet thickness shall conform to the following:

Nominal Inside Diameter (inches)	Corrugations	Minimum Specified Sheet Thickness (inches)	
6	1 1/2" X 1/4"	.052	
8, 10	1 1/2" X 1/4"	.064	
12, 15, 18 & 21	2 2/3" X 1/2"	.064	
24, 30 , 36	2 2/3" X 1/2"	.079	
42, 48	2 2/3" X 1/2"	.109	
54, 60	3" X 1" or 5” X 1”	.064	
66, 72	3" X 1" or 5” X 1”	.079	
78, 84, 90, & 96	3" X 1" or 5” X 1”	.109	
		Steel	Aluminum
18, 24, 30	Helical Rib ¾” X ¾ “ X 7 ½”	.064	.060
36	Helical Rib ¾” X ¾ “ X 7 ½”	.064	.075
42, 48 & 54	Helical Rib ¾” X ¾ “ X 7 ½”	.079	.105
60, 66, 72, 78, 84	Helical Rib ¾” X ¾ “ X 7 ½”	.109	.135

Aluminum pipe sheet thickness may be .004 inch less than specified above for 1 1/2-inch x 1/4-inch, 2 2/3-inch x 1/2-inch and 3-inch x 1-inch or 5-inch x 1-inch corrugations. Helical Rib shall be as specified above.

Zinc coated steel pipe, fittings, and coupling bands shall be coated with bituminous material as specified in AASHTO M 190 Type C. Pipe, fittings and coupling bands fabricated from aluminum coated steel sheet (Type 2) does not require coating of bituminous material or paved invert.

Metallic-coated and polymer-precoated steel pipe, fittings, and coupling bands shall be coated as specified in AASHTO M 246, Type B. The thicker polymeric coating shall be on the inside of the pipe.

Only one type of coating will be allowed for any continuously connected run of pipe.

If elongation of the pipe is required, it shall be done by the manufacturer.

3. Perforated or Plain Coated Metal Pipe for Underdrains or Outlets: This material shall conform to the requirements of AASHTO M 36, Type III or AASHTO M 245, Type III.

(a) Perforations: The minimum diameter of perforations after asphalt coating shall be 1/4 inch.

(b) Coating: All requirements of M.08.01-2 shall apply except that the minimum thickness of the bituminous coating on zinc coated steel pipe, fittings, and coupling bands pipe shall be 0.03 inches instead of 0.05 inches.

4. Coated Corrugated Metal Pipe-Arches: This material shall conform to the requirements of AASHTO M 36, Type II, Type IIR or AASHTO M 245, Type II. All coating requirements of M.08.01-1 shall apply.

Unless otherwise indicated on the plans, the corrugation size and sheet thickness shall conform to the following:

Pipe-Arch Equivalent Diameter (Inches)	Corrugations	Minimum Sheet Thickness (Inches)
15, 18, 21	2 2/3" X 1/2"	.064
24, 30	2 2/3" X 1/2"	.079
36, 42, 48	2 2/3" X 1/2"	.109
54, 60	2 2/3" X 1/2"	.138
60, 66, 72	3" X 1" or 5” X 1”	.079
78, 84, 90, 96	3" X 1" or 5” X 1”	.109
18, 21, 24	Helical Rib ¾” X ¾ “ X 7 ½”	.064
30, 36	Helical Rib ¾” X ¾ “ X 7 ½”	.079
42, 48, 54, 60	Helical Rib ¾” X ¾ “ X 7 ½”	.109

5. Corrugated Structural Plates and Bolts: These plates and bolts are for use in the construction of metal pipe of the large diameter and for metal plate arches or pipe arches to be assembled in the field, and they shall conform to the requirements of AASHTO M 167 for corrugated metal pipe.

The dimensions of plates and details of fabrication shall conform to the requirements of the manufacturer. Where the plans call for a heavier gage for the bottom of the pipe than for the remainder of the pipe circumference, the lower fourth of the circumference shall be the minimum width of the heavier gage material.

The coating shall conform to the requirements of AASHTO M 243.

6. Metal Culvert End: The materials used in this work shall meet the pertinent requirements of Articles M.08.01-2 and M.08.01-4.

Bolts and fittings shall conform to the requirements of ASTM A 307 and shall be galvanized to conform to the requirements of ASTM A 153.

The units shall be coated as specified in Articles M.08.01-2, M.08.01-4 or M.08.01-5.

Fabrication: These units shall be formed from a rectangular sheet of metal by cutting and bending to form the desired shape. Two or more sheets may be fastened together by riveting or bolting so as to form a rectangular sheet of the required width. Skirt extensions and a top plate, as needed to complete the unit, shall be separately formed. Skirt extensions shall be riveted or bolted to the skirt.

All edges, which will be exposed above the surface of the ground, shall be reinforced before forming the unit by either of the following means:

(1) The edge shall be bent to form a semicircular roll with an exterior diameter of 1 inch, as shown in the detail drawing on the plans.

(2) A split tube of 1 inch outside diameter and not lighter than 14 gage, shall be slipped over a row of rivets spaced not more than 6 inches apart, as shown in the detail drawing on the plans.

One corrugation, matching the corrugations of the pipe or pipe-arch to which the unit is to be attached, shall be formed in the unit to insure secure and accurate alignment.

Attachment: The unit may be shop-riveted to a length of the appropriate pipe or pipe-arch, or may be field attached to the pipe or pipe arch by either of the other attachment systems shown on the plans, or by other means acceptable to the Engineer. If the unit is shop-riveted to a length of pipe or pipe-arch, this length shall be sufficient to permit proper use of standard coupling bands.

CONCRETE

7. Reinforced Concrete Pipe: Unless otherwise specified, this material shall conform to the requirements of AASHTO M 170, Class IV, as supplemented and modified by the following:

(a) Reinforcement: In circular pipe, only circular reinforcement will be allowed.

(b) Laps and Welds: The reinforcement shall be lapped not less than 2 inches and welded with an electric welding machine.

(c) Quality Assurance Testing: Circular and elliptical reinforced concrete pipe shall be tested by the three-edge bearing method prescribed in AASHTO T 280, except as follows:

1) Modified or special design pipe shall be tested to the 0.01-inch load and the ultimate load requirements as per AASHTO M 170 and M 207.

2) At the discretion of the Engineer, pipe of standard design, as specified in AASHTO M 170 and M 207, may be tested to the 0.01-inch requirement plus 10% additional load in lieu of ultimate load testing. Test pipe attaining a 0.01-inch crack will not be acceptable for use on Department projects.

3) Cores for absorption and determination of steel reinforcement shall be taken on a random basis as determined by the Engineer. The cores shall be at least 6 inches in diameter.

(d) Inspection: The pipe plant, materials, processes of manufacture and the finished pipe shall be subject to inspection and approval by the Department. The pipe manufacturer's records related to component materials, production and shipment of pipe for Department use shall be made available to the Department on request. The equipment and labor necessary for inspection, sampling and testing as required by the Department shall be furnished by the pipe manufacturer. Test equipment shall be calibrated at least once each 12 months, or as directed by the Engineer. The plant cement and aggregate scales shall be inspected and sealed by the approved agency at least once every twelve months.

(e) Preliminary Tests and Tests for Extended Deliveries: As directed by the Engineer, the Department shall select for test from the stock of any manufacturer proposing to supply pipe to the Department, 2 of each size pipe up through 30-inch diameter and 1 of each size greater than 30-inch diameter. These sample pipes shall be tested under Department supervision by the three-edge bearing method. For pipe that fails, it shall be necessary for the manufacturer to either physically isolate the rejected pipe at his plant or to provide some means to clearly indicate the unacceptability of the pipe. Either method shall be performed to the satisfaction of the Engineer. When production is resumed on any size, wall thickness or class previously rejected, preliminary tests shall be required. If 95% of all pipe tested at a particular plant from the first of the calendar year to September 30 meet specifications, including both preliminary and extended tests, it will not be necessary to perform the Fall three-edge bearing tests at this plant.

Use of compression tests on representative cylinders or cores to determine the compressive strength of the concrete incorporated into the pipe products will be at the discretion of the Engineer.

(f) Shipping: Pipe shall not be shipped until it is at least 7 days old unless earlier shipment is authorized by the Engineer on the basis of tests.

(g) Certification: Pipe will be accepted by the Department on the basis of manufacturer's certification. The manufacturer shall certify each shipment of pipe on Department Form MAT-073(PC-1), "Certification of Precast Concrete Products." Two (2) copies of this certification shall be furnished with the shipment to the Engineer at the project site.

8. Reinforced Concrete Elliptical Pipe: This material shall conform to the requirements of AASHTO M 207, Class HE IV and supplemented as follows:

(a) Manufacturing and testing shall conform to Article M.08.01-7.

9. Perforated Reinforced Concrete Pipe for Underdrains and Outlets: This material shall conform to the requirements of Article M.08.01-7 and shall be slotted in accordance with AASHTO M 175, Type 2, or as shown on the plans. Pipe for outlets shall not be perforated.

10. Slotted Drain Pipe: The pipe shall be asphalt coated and conform to Subarticle M.08.01-2. Concrete shall conform to Article M.03.01, Class "A" or pavement type. Concrete shall be cured in conformance with M.03.01. The inlet aperture shall be longitudinal on top of the pipe and may be continuous or intermittent. The opening in the pipe wall may be fabricated in the form of continuous bar risers and spacers or of intermittent cut-out segments with structural members supporting a continuous grating as indicated in the plans. End caps shall be as provided by the manufacturer.

Elastomeric polymer sealer shall meet the physical requirements of ASTM D 3406 and be accepted on manufacturer's certification.

The pipe shall be helically corrugated with a continuous welded or lock seam. Pipe ends shall have 2 rolled annular corrugations on each end for jointing.

Bar Riser and Spacer Type: Riser assemblies shall be fabricated from structural steel, in accordance with the dimensions on the plans. The riser assemblies shall be hot dipped galvanized according to ASTM A123. The assemblies shall be welded to the corrugated pipe on each side of the riser at the location of the solid web spacers. The riser shall terminate 1 inch from the ends of each pipe length to allow clearance for single bolt coupling bands. The ends of the riser shall be closed with a suitable welded plate where solid web spacers do not come to the ends of the riser.

The maximum deviation from straight in both the vertical and horizontal plane of the riser assembly shall not exceed 3/4 inch in a 20-foot length.

Continuous Grating Type: The cut-out pipe segments shall provide a 2-inch wide slot of maximum length between the lock seams. The slot shall be left intact 1 inch on each side of the lock seam and this material shall be utilized to fasten the reinforcing bar in place.

A bent epoxy coated reinforcing bar shall cross the slotted opening on 6-inch centers.

The reinforcing bar shall be an ASTM A 615, No. 13, deformed bar epoxy coated with 7 mils of fusion bonded epoxy powder conforming to AASHTO M 284.

Grating shall be furnished unless noted in the contract documents. Grating and all bearing bars, cross bars, and bent connecting bars shall be welding quality, mild carbon steel conforming to ASTM A 569 and to the dimensions shown on the plans.

Tie down bolts shall be J-Type bolts, plated, ASTM A 307 steel supplied with self-locking nuts.

Concrete forms shall be of cellular foam plastic base, fabricated as an integral part of the pipe and reinforcing bar assembly. The form shall be capped with a thick wood or plastic cap resting on top of the foam plastic and reinforcing bar.

The maximum deviation from straight in both the vertical and horizontal plane of the completed assembly shall not exceed 3/4 inch in a 20-foot length. All grating and hardware shall be galvanized in conformance with Article M.06.03. Expansion joint filler shall conform to M.03.

11. Reinforced Concrete Culvert End: The barrel shall conform to the requirements of AASHTO M 170, Class II, except that the three-edge bearing tests will not be required. The flare shall be of the same thickness and materials as the barrel and shall have steel reinforcement equaling or exceeding the amount shown on the table for the pertinent size.

Tongues and grooves shall be compatible with tongues and grooves of pipe meeting AASHTO M 170, Class IV.

Air entrainment shall be added to these units so as to maintain 5 to 8% entrained air.

ALUMINUM

12. Corrugated Aluminum Pipe: This material shall conform to the requirements of AASHTO M 196 Type I or Type IR. Sheet thickness shall conform to the requirements of M.08.01-2.

13. Corrugated Aluminum Pipe for Underdrains and Outlets: This material shall conform to the requirements of AASHTO M 196, Type III or Type IIIR. Sheet thickness shall conform to the requirements of M.08.01-2. Pipe for outlets shall not be perforated.

14. Corrugated Aluminum Pipe Arches: These pipe arches shall conform to the requirements of AASHTO M 196, Type II or Type IIR. Sheet thickness shall conform to the requirements of M.08.01-4.

SEALERS/GASKETS

15. Cold-Applied Bituminous Sealer: This material, for use in sealing of joints in concrete pipes, shall be free of asbestos and shall meet the following requirements:

It shall be of such consistency that it may be spread on the joints with a trowel when

the temperature of the air is between -20° F and 100° F. The bituminous material shall adhere to the concrete pipe so as to make a watertight seal and shall not flow, crack or become brittle when exposed to the atmosphere.

Unless otherwise specified, sampling shall be done in accordance with AASHTO T 40.

The bituminous sealer shall be delivered to the project in suitable containers for handling and shall be sealed or otherwise protected from contamination. The container shall show the brand name, net mass or volume, and the requirements for application.

16. Preformed Plastic Gaskets: This material for use in sealing of joints in concrete pipe shall conform to the requirements of ASTM C 1478.

17. Flexible, Watertight, Rubber-Type Gaskets: This material for use in sealing concrete pipe joints shall conform to the requirements of ASTM C 443.

PLASTIC

18. Corrugated Polyethylene Pipe: Corrugated Polyethylene Pipe, either corrugated interior surface (Type C) or smooth interior surface (Type S) without perforations or with perforations (Type CP or SP), shall conform to AASHTO M 252 or M 294. Type D pipe shall have a smooth interior surface braced circumferentially or spirally with projections or ribs joined to a smooth outer wall. Both surfaces shall be fused to, or be continuous with, the internal supports. Type D shall conform to AASHTO M 294.

19. Geotextiles: The geotextile shall be non-rotting, acid and alkali resistant, and have sufficient strength and permeability for the purpose intended including handling and backfilling operations. Fibers shall be low water absorbent. The fiber network must be dimensionally stable and resistant to delamination. The geotextile shall be free of any chemical treatment or coating that will reduce its permeability. The geotextile shall also be free of any flaws or defects which will alter its physical properties. Torn or punctured geotextiles shall not be used. For each specific use, only geotextiles that are already on the Connecticut Department of Transportation's Approved Products List for the geotextile type will be used. The Engineer reserves the right to reject any geotextile he deems unsatisfactory for a specific use. The brand name shall be labeled on the geotextile or the geotextile container. Geotextiles that are susceptible to damage from sunlight or heat shall be so identified by suitable warning information on the packaging material.

Geotextiles susceptible to sunlight damage shall not be used in any installations where exposure to light will exceed 30 days, unless specifically authorized in writing by the Engineer.

20. Polyvinyl Chloride Plastic Pipe: The pipe shall conform to the requirements of ASTM D 1785. Couplings and elbows shall conform to the requirements of ASTM D 2466 or D 2467.

21. Polyvinyl Chloride Gravity Pipe: This pipe shall conform to one of the following specifications: ASTM F789, ASTM F 679, or ASTM F 794.

M.08.02—Catch Basins, Manholes, and Drop Inlets: The materials to be used in the construction shall conform to the following:

1. Brick for Catch Basins, Manholes or Drop Inlets: Brick for catch basins, manholes or drop inlets shall conform to the requirements of ASTM C 32, except that the depth shall be 2 1/4 inches, the width 3 5/8 inches, and the length 8 inches, and except that the maximum water-absorption by 5-hour boiling shall not exceed the following limits:

Average of 5 bricks	15%
Individual brick	18%

2. Concrete Building Brick for Catch Basins, Manholes, or Drop Inlets: Concrete building brick for catch basins, manholes, or drop inlets shall conform to the requirements of ASTM C 55, Grade S II.

3. Masonry Concrete Units for Catch Basins, Manholes, or Drop Inlets: Masonry concrete units for catch basins, manholes, or drop inlets shall conform to the requirements of ASTM C 139.

4. Precast Units for Drainage Structures: Precast units for drainage structures may be used except where particular conditions require building or casting structures in place.

Fabrication plants shall have a quality control plan approved by the Division Chief of Materials Testing that is demonstrated to the satisfaction of the Engineer. The facility, the quality of materials, the process of fabrication, and the finished precast units shall be subject to inspection by the Engineer.

Precast manholes shall conform to the requirements of AASHTO M 199 (ASTM C 478).

Circular precast catch basins and drop inlets shall conform to AASHTO M 199 (ASTM C 478) as supplemented below. Rectangular precast catch basins and drop inlets shall conform to ASTM C 913 as supplemented below:

All materials used for concrete shall conform to the requirements of Section M.03.

The provisions of Subarticle 4.01.03 (A) shall apply except that the concrete shall contain 5.0%-8.0% entrained air. Water-absorption of individual cores taken from precast units shall be not more than 7%.

Reinforcement shall conform to the requirements of Article M.06.01.

Suitable provision shall be made in casting the units for convenient handling of the completed casting, and additional reinforcement steel shall be provided to allow for such handling in the casting yard and during transportation and placement. Each completed unit shall be identified with the name of manufacturer and date of the concrete pour from which it was cast, either by casting this information into an exposed face of the unit or by suitable stencil. For each day's production of precast units, the

fabricator shall mold, cure, and test standard cylinders, or cylinders compacted in a similar manner to the parent precast units, for the purpose of determining the compressive strength of the concrete incorporated into the precast units. Concrete used in molding the cylinders shall be representative of the concrete incorporated into the precast units during the production period. Cylinders shall be molded in accordance with AASHTO T 23, cured by the same method as the units they represent, and tested as prescribed in AASHTO T 22.

The fabricator shall determine the air content of the concrete used in the day's production of precast units by performing tests as prescribed in AASHTO T 152.

The equipment and personnel necessary to perform the required testing shall be furnished by the fabricator and approved by the Engineer. All testing equipment shall be calibrated at least once each 12 months or as directed by the Engineer. The fabricator shall maintain records relative to the production, testing, and shipment of precast units supplied to the Department. Said records shall be available to a representative of the Department upon his request.

The Department may accept precast concrete units on the basis of fabricator's certification. The fabricator shall certify each shipment of precast concrete units on Department Form MAT 314 (PC-1), "Certification of Precast Concrete Products." Two (2) copies of this certification shall be furnished with the shipment to the Engineer at the Project site.

Precast units that are cracked, show evidence of honeycomb, or have over 10% of their surface area patched may be subject to rejection, even though meeting other requirements.

5. Metal for Drainage Structures: Metal for catch basins, drop inlet and manhole frames, extensions, covers, and gratings shall be cast iron, cast steel, structural steel or malleable iron conforming to the requirements of the plans. Covers and gratings shall bear uniformly on their supports.

Extensions shall be designed so that the existing manhole cover or catch basin grate, when set in place, will have substantially the same bearing, fit, and load carrying capacity as in the existing frame. The extension shall be designed to fit into the original frame, resting specifically on the flange and rim area. The extension shall accept the existing cover or grate so that the cover or grate is seated firmly without movement.

Ladder rungs for manholes shall conform to AASHTO M 199 (ASTM C 478).

Cast iron shall conform to the requirements of AASHTO M 105, Class 25 for the frames and Class 30 for grates.

Cast steel shall conform to the requirements of ASTM A 27, Grade optional, and shall be thoroughly annealed.

Structural Steel shall conform to the requirements of ASTM A 36, or A 283, Grade B or better, as to quality and details of fabrication, except that in the chemical composition of the steel, the 2/10 of 1% of copper may be omitted.

Malleable iron shall conform to the requirements of ASTM A 47, Grade 22010.

The materials and method of manufacture for drop inlets shall conform to the requirements as stated on the plans or as ordered.

M.08.03—Aggregates

1. Bedding Material: Material for pipe bedding shall be sand or sandy soil, all of which passes a 3/8-inch sieve and not more than 10% passes a No. 200 sieve.

When ground water is encountered, the Engineer may allow No. 6 stone conforming to Article M.01.01 to be used instead of sand or sandy soil.

2. Aggregates for Underdrains: Materials for filling the trench shall consist of well-graded, clean, non-plastic sands or well-graded, clean, durable broken stone or screened gravel. Unless otherwise noted, the type of material to be used shall be sand.

Sand: This material shall meet the requirements of Article M.03.01-2

Broken Stone or Screened Gravel: This material shall conform to the gradation requirements for Size No. 8 under Article M.01.01.

CONNECTICUT
SUPPLEMENTAL SPECIFICATION
SECTION M.11
MASONRY FACING
CEMENT AND DRY RUBBLE MASONRY
BRICK
MORTAR

Article M.11.01 – Masonry Facing:

Subarticle 1. : Masonry Facing Stone

Delete the third sentence:

"Preferably, the stone shall be from a quarry the product of which is known to be of satisfactory quality."

Delete **"Subarticle 2. : Vacant:"**

Article M.11.04—Mortar:

Delete the entire article and replace it with the following:

M.11.04—Mortar: Mortar shall be either Pre-blended or Pre-packaged material conforming to:

ASTM C1714 - Standard Specification for Pre-blended Dry Mortar Mix for Unit Masonry;

ASTM C387 - Standard Specification for Packaged, Dry, Combined Materials for Concrete and High Strength Mortar;

or be composed of one part Portland cement and two parts, by volume, of surface dry fine aggregate blended on site.

Hydrated lime, in an amount not to exceed 4 pounds (1.8 kilograms) of lime to each bag of cement, may be added when the material is blended on site at the option of the Engineer. Cement and hydrated lime shall conform to the following requirements:

(a) Portland cement, Types I, II or IS, and water shall conform to the requirements of Article M.03.

(b) Hydrated lime shall conform to the requirements of ASTM C 6.

When mortar is mixed on the project site, **fine aggregate** shall conform to Grading A or B as indicated in the table below, and to the requirements of Section M.03. For laying stone, precast units, or for shotcrete, fine aggregate shall conform to Grading A. For pointing stone or the precast units and for laying brick or sealing pipe joints, the fine aggregate shall conform to Grading B.

Table of Gradation, Fine Aggregate for Mortar

Square Mesh Sieves	Grading	
	A	B
	Percentage Passing by weight (mass)	
Pass 3/8 inch (9.5 millimeters)	100	
Pass #4 (4.75 millimeters)	95-100	
Pass #8 (2.36 millimeters)	80-100	100
Pass #16 (1.18 millimeters)	50-85	
Pass #30 (600 microns)	25-60	
Pass #50 (300 microns)	10-30	10-40
Pass #100 (150 microns)	2-10	0-10

CONNECTICUT
SUPPLEMENTAL SPECIFICATION
SECTION M.13
ROADSIDE DEVELOPMENT

Delete article M.13.01 – Topsoil and replace it with the following:

"**Article M.13.01 – Topsoil:** The term topsoil used herein shall mean a soil meeting the soil textural classes established by the USDA Classification System based upon the proportion of sand, silt, and clay size particles after passing a No. 10 (2 millimeter) sieve and subjected to a particle size analysis. The topsoil shall contain 5% to 20% organic matter as determined by loss on ignition of oven-dried samples dried at 221° F (105° C). The pH range of the topsoil shall be 5.5 to 7.0.

The following textural classes shall be acceptable:

Loamy sand, including coarse, loamy fine, and loamy very fine sand, with not more than 80% sand
Sandy loam, including coarse, fine and very fine sandy loam
Loam
Clay loam, with not more than 30% clay
Silt loam, with not more than 60% silt
Sandy clay loam, with not more than 30% clay
All textural classes of topsoil with greater than 80% sand content will be rejected.

The topsoil furnished by the Contractor shall be a natural, workable soil that is screened and free of subsoil, refuse, stumps, roots, brush, weeds, rocks and stones over 1 1/4 inches (30 millimeters) in diameter, and any other foreign matter that would be detrimental to the proper development of plant growth.

The Contractor shall notify the Engineer of the location of the topsoil at least 15 calendar days prior to delivery. The topsoil and its source shall be inspected and approved by the Engineer before the material is delivered to the project. Any material delivered to the project, which does not meet specifications or which has become mixed with undue amounts of subsoil during any operation at the source or during placing and spreading, will be rejected and shall be replaced by the Contractor with acceptable material.

When topsoil is not furnished by the Contractor, it shall be material that is stripped in accordance with Section 2.02 or is furnished by the State, and will be tested as determined by the Engineer.

1. Planting Soil: Soil Material to be used for plant backfill shall be one of the following textural classes:

Loamy sand, with not more than 80% sand
Sandy loam
Loam
Clay loam, with not more than 30% clay
Silt loam, with not more than 60% silt
Sandy clay loam, with not more than 30% clay

Planting soil shall be premixed, consisting of approximately 50 % topsoil, 25 % compost or peat, and 25% native soil. Planting soil shall be loose, friable, and free from refuse, stumps, roots, brush, weeds, rocks and stones 2 inches (50 millimeters) in diameter. In addition, the material shall be free from any material that will prevent proper development and plant growth.

(a) For ericaceous plants and broad-leaved evergreens requiring an acid soil, planting soil shall have a true pH of 4.5 to 5.5. If it has not, it shall be amended by the Contractor at his own expense to the proper pH range by mixing with sulphur.

(b) Planting soil for general planting of nonacid-loving plants shall have a true pH value of 5.6 to 6.5. If it has not, it shall be amended by the Contractor at his own expense to the proper pH range by mixing with dolomitic limestone.

The amount of either sulphur or limestone required to adjust the planting soil to the proper pH range (above) shall be determined by the Engineer based on agronomic tests. The limestone shall conform to the requirements of Article M.13.02. The sulphur shall be commercial or flour sulphur, unadulterated, and shall be delivered in containers with the name of the manufacturer, material, analysis, and net weight (mass) appearing on each container.

The Engineer reserves the right to draw such samples and to perform such tests as he deems necessary to ensure that these specifications are met.”

CONNECTICUT
SUPPLEMENTAL SPECIFICATION
SECTION M.16
TRAFFIC CONTROL SIGNALS

Article M.16.04 – Poles:

Subarticle 1. Steel Poles:

(i) Wire Entrance Fitting:

In the second sentence, delete "required to accept the cables".

Article M.16.06 – Traffic Signals:

In the 1st paragraph of subsection 9 replace "MIL" with "MILSPEC".

Under the paragraph entitled Third Coat, replace the first two sentence with the following:

" Dark Green Enamel: Shall be Dark Green exterior baked enamel and shall comply with FS A-A 2962. The color shall be No. 14056, FS No. 595."

and in the third sentence replace "MIL" with "MILSPEC."

Article M.16.08 – Pedestrian Push Button

Subarticle – Painting

Delete the entire "Third Coat" paragraph and replace with the following:

Third Coat: Dark Green Enamel, shall be DARK GREEN exterior-baking enamel and shall comply with Federal Specifications A-A 2962. The color shall be No. 14056, Federal Standard No. 595.

M.16.15 – Messenger and Span Wire:

Delete the entire article and replace with the following:

The materials for this work shall conform to the following requirements:

1. Messenger wire shall be made of double-galvanized 7-strand utilities-grade steel wire cable, not less than 3/16 inch (4.8 millimeters) in diameter, with at least a 2,400-pound (10.7-killinewton) breaking strength.

2. Span wire:

(a) “Span wire” shall be made of double-galvanized 7-strand utilities-grade steel wire cable, not less than 3/8 inch (9.5 millimeters) in diameter, with at least an 11,200-pound (50-kilonewton) breaking strength.

(b) “Span wire (high strength)” shall be made of double-galvanized 7-strand extra-high-strength-grade steel wire cable, not less than 7/16 inch (11.1 millimeters) in diameter, with at least a 20,800-pound (94-kilonewton) breaking strength.

3. All hardware accessories shown on the plans to be used in span wire or messenger mounting shall be made of high-strength, double-galvanized, first-quality materials.

CONNECTICUT
SUPPLEMENTAL SPECIFICATION
SECTION M.17
ELASTOMERIC MATERIALS

M.17.01 – Elastomeric Bearing Pads:

In the 2nd paragraph of subsection 4(b), replace "MS MIL" with "MILSPEC."

CONNECTICUT
SUPPLEMENTAL SPECIFICATION
SECTION M.18
SIGNING

M.18.10 – Demountable Copy:

In the chart under subsection 3H, replace "MS MIL" with "MILSPEC."

Construction Contracts - Required Contract Provisions
(FTA Funded Contracts)

Index

1. Federal Transit Administration Required Contract Clauses

2. Title VI of the Civil Rights Act of 1964 / Nondiscrimination Requirements

3. Contractor Work Force Utilization (Federal Executive Order 11246) / Specific Equal Employment Opportunity

4. Requirements of Title 49, CFR , Part 26

5. Contract Wage Rates

6. Americans with Disabilities Act of 1990

7. Connecticut Statutory Labor Requirements

    a. Construction, Alteration or Repair of Public Works Projects; Wage Rates
    b. Debarment List - Limitation on Awarding Contracts
    c. Construction Safety and Health Course
    d. Awarding of Contracts to Occupational Safety and Health Law Violators Prohibited
    e. Residents Preference in Work on Other Public Facilities (Not Applicable to Federal Aid Contracts)

8. Tax Liability - Contractor's Exempt Purchase Certificate (CERT – 141)

9. Executive Orders (State of CT)

10. Non Discrimination Requirement (pursuant to section 4a-60 and 4a-60a of the Connecticut General Statutes, as revised)

11. Whistleblower Provision

12. Connecticut Freedom of Information Act

    a. Disclosure of Records
    b. Confidential Information

13. Service of Process

14. Substitution of Securities for Retainages on State Contracts and Subcontracts

15. Health Insurance Portability and Accountability Act of 1996 (HIPAA)

16. Forum and Choice of Law

17. Summary of State Ethics Laws

18. Audit and Inspection of Plants, Places of Business and Records

19. Campaign Contribution Restriction

20. Tangible Personal Property

21. Bid Rigging and/or Fraud – Notice to Contractor

22. Consulting Agreement Affidavit

Index of Exhibits

EXHIBIT A – Federal Transit Administration Required Contract Clauses (Begins on page 13)
EXHIBIT B – Title VI Contractor Assurances (page 36)
EXHIBIT C – Contractor Work Force Utilization (Federal Executive Order 11246) / Equal Employment Opportunity (page 37)
EXHIBIT D – Health Insurance Portability and Accountability Act of 1996 (HIPAA) (page 44)
EXHIBIT E - Campaign Contribution Restriction (page 52)
EXHIBIT F – Federal Wage Rates (Attached at the end)
EXHIBITG - State Wage Rates (Attached at the end)

1. Federal Transit Administration Required Contract Clauses

If applicable, the Contractor shall comply with the Federal Transit Administration (FTA) required contract clauses, attached at Exhibit A, as revised, of this section, all of which are hereby made part of this contract.

2. Title VI of the Civil Rights Act of 1964 / Nondiscrimination Requirements

The Contractor shall comply with Title VI of the Civil Rights Act of 1964 as amended (42 U.S.C. 2000 et seq.), all requirements imposed by the regulations of the United States Department of Transportation (49 CFR Part 21) issued in implementation thereof, and the Title VI Contractor Assurances attached hereto at Exhibit B, all of which are hereby made a part of this Contract.

3. Contractor Work Force Utilization (Federal Executive Order 11246) / Equal Employment Opportunity

(a) The Contractor shall comply with the Contractor Work Force Utilization (Federal Executive Order 11246) / Equal Employment Opportunity requirements attached at Exhibit C and hereby made part of this Contract, whenever a contractor or subcontractor at any tier performs construction work in excess of $10,000. These goals shall be included in each contract and subcontract. Goal achievement is calculated for each trade using the hours worked under each trade.

(b) Companies with contracts, agreements or purchase orders valued at $10,000 or more will develop and implement an Affirmative Action Plan utilizing the ConnDOT Affirmative Action Plan Guideline. This Plan shall be designed to further the provision of equal employment opportunity to all persons without regard to their race, color, religion, sex or national origin, and to promote the full realization of equal employment opportunity through a positive continuation program. Plans shall be updated as required by ConnDOT.

4. Requirements of Title 49, Code of Federal Regulations (CFR), Part 26

Pursuant to 49 CFR 26.13, the following paragraph is part of this Contract and shall be included in each subcontract the Contractor enters into with a subcontractor:

"The Contractor, subrecipient or subcontractor shall not discriminate on the basis of race, color, national origin, or sex in the performance of this contract. The Contractor shall carry out applicable requirements of 49 CFR Part 26 in the award and administration of U.S. DOT-assisted contracts. Failure by the Contractor to carry out these requirements is a material breach of this Contract, which may result in the termination of this contract or such other remedy as ConnDOT (recipient) deems appropriate."

5. Contract Wage Rates

The Contractor shall comply with:

The Federal and State wage rate requirements indicated in Exhibits F and G hereof are hereby made part of this Contract. If a conflict exists between the Federal and State wage rates, the higher rate shall govern.

Prevailing Wages for Work on State Highways; Annual Adjustments. With respect to contracts for work on state highways and bridges on state highways, the Contractor shall comply with the provisions of Section 31-54 and 31-55a of the Connecticut General Statutes, as revised.

As required by section 1.05.12 (Payrolls) of the State of Connecticut, Department of Transportation's Standard Specification for Roads, Bridges and Incidental Construction (FORM 816), as may be revised, every Contractor or subcontractor performing project work on a federal aid project is required to post the relevant prevailing wage rates as determined by the United States Secretary of Labor. The wage rate determinations shall be posted in prominent and easily accessible places at the work site.

6. Americans with Disabilities Act of 1990

This provision applies to those Contractors who are or will be responsible for compliance with the terms of the Americans with Disabilities Act of 1990, (42 U.S.C. 12101 et seq.), (Act), during the term of the Contract. The Contractor represents that it is familiar with the terms of this Act and that it is in compliance with the Act. Failure of the Contractor to satisfy this standard as the same applies to performance under this Contract, either now or during the term of the Contract as it may be amended, will render the Contract voidable at the option of the State upon notice to the contractor. The Contractor warrants that it will hold the State harmless and indemnify the State from any liability which may be imposed upon the State as a result of any failure of the Contractor to be in compliance with this Act, as the same applies to performance under this Contract.

7. Connecticut Statutory Labor Requirements

(a) Construction, Alteration or Repair of Public Works Projects; Wage Rates. The Contractor shall comply with Section 31-53 of the Connecticut General Statutes, as revised. The wages paid on an hourly basis to any person performing the work of any mechanic, laborer or worker on the work herein contracted to be done and the amount of payment or contribution paid or payable on behalf of each such person to any employee welfare fund, as defined in subsection (i) of section 31-53 of the Connecticut General Statutes, shall be at a rate equal to the rate customary or prevailing for the same work in the same trade or occupation in the town in which such public works project is being constructed. Any contractor who is not obligated by agreement to make payment or contribution on behalf of such persons to any such employee welfare fund shall pay to each mechanic, laborer or worker as part of such person's wages the amount of payment or contribution for such person's classification on each pay day.

(b) Debarment List. Limitation on Awarding Contracts. The Contractor shall comply with Section 3l-53a of the Connecticut General Statutes, as revised.

(c) Construction Safety and Health Course. The Contractor shall comply with section 31-53b of the Connecticut General Statutes, as revised. The contractor shall furnish proof to the Labor Commissioner with the weekly certified payroll form for the first week each employee begins work on such project that any person performing the work of a mechanic, laborer or worker pursuant to the classifications of labor under section 31-53 of the Connecticut General Statutes, as revised, on such public works project, pursuant to such contract, has completed a course of at least ten hours in duration in construction safety and health approved by the federal Occupational Safety and Health Administration or, has completed a new miner training program approved by the Federal Mine Safety and Health Administration in accordance with 30 CFR 48 or, in the case of telecommunications employees, has completed at least ten hours of training in accordance with 29 CFR 1910.268.

Any employee required to complete a construction safety and health course as required that has not completed the course, shall have a maximum of fourteen (14) days to complete the course. If the employee has not been brought into compliance, they shall be removed from the project until such time as they have completed the required training.

Any costs associated with this notice shall be included in the general cost of the contract. In addition, there shall be no time granted to the contractor for compliance with this notice. The contractor's compliance with this notice and any associated regulations shall not be grounds for claims as outlined in Section 1.11 – "Claims".

(d) Awarding of Contracts to Occupational Safety and Health Law Violators Prohibited. The Contract is subject to Section 31-57b of the Connecticut General Statutes, as revised.

(e) Residents Preference in Work on Other Public Facilities. NOT APPLICABLE TO FEDERAL AID CONTRACTS. Pursuant to Section 31-52a of the Connecticut General Statutes, as revised, in the employment of mechanics, laborers or workmen to perform the work specified herein, preference shall be given to residents of the state who are, and continuously for at least six months prior to the date hereof have been, residents of this state, and if no such person is available, then to residents of other states

8. Tax Liability - Contractor's Exempt Purchase Certificate (CERT – 141)

The Contractor shall comply with Chapter 219 of the Connecticut General Statutes pertaining to tangible personal property or services rendered that is/are subject to sales tax. The Contractor is responsible for determining its tax liability. If the Contractor purchases materials or supplies pursuant to the Connecticut Department of Revenue Services' "Contractor's Exempt Purchase Certificate (CERT-141)," as may be revised, the Contractor acknowledges and agrees that title to such materials and supplies installed or placed in the project will vest in the State simultaneously with passage of title from the retailers or vendors thereof, and the Contractor will have no property rights in the materials and supplies purchased.

Forms and instructions are available anytime by:

Internet: Visit the DRS website at www.ct.gov/DRS to download and print Connecticut tax forms; or Telephone: Call 1-800-382-9463 (Connecticut calls outside the Greater Hartford calling area only) and select Option 2 or call 860-297-4753 (from anywhere).

9. Executive Orders

This Contract is subject to the provisions of Executive Order No. Three of Governor Thomas J. Meskill, promulgated June 16, 1971, concerning labor employment practices, Executive Order No. Seventeen of Governor Thomas J. Meskill, promulgated February 15, 1973, concerning the listing of employment openings and Executive Order No. Sixteen of Governor John G. Rowland promulgated August 4, 1999, concerning violence in the workplace, all of which are incorporated into and are made a part of the Contract as if they had been fully set forth in it. The Contract may also be subject to the applicable parts of Executive Order No. 7C of Governor M. Jodi Rell, promulgated July 13, 2006, concerning contracting reforms and Executive Order No. 14 of Governor M. Jodi Rell, promulgated April 17, 2006, concerning procurement of cleaning products and services, in accordance with their respective terms and conditions. If Executive Orders 7C and 14 are applicable, they are deemed to be incorporated into and are made a part of the Contract as if they had been fully set forth in it. At the Contractor's request, the Department shall provide a copy of these orders to the Contractor.

10. Non Discrimination Requirement (pursuant to section 4a-60 and 4a-60a of the Connecticut General Statutes, as revised): References to "minority business enterprises" in this Section are not applicable to Federal-aid projects/contracts. Federal-aid projects/contracts are instead subject to the Federal Disadvantaged Business Enterprise Program.

(a) For purposes of this Section, the following terms are defined as follows:

i. "Commission" means the Commission on Human Rights and Opportunities;
ii. "Contract" and "contract" include any extension or modification of the Contract or contract;
iii. "Contractor" and "contractor" include any successors or assigns of the Contractor or contractor;
iv. "gender identity or expression" means a person's gender-related identity, appearance or behavior, whether or not that gender-related identity, appearance or behavior is different from that traditionally associated with the person's physiology or assigned sex at birth, which gender-related identity can be shown by providing evidence including, but not limited to, medical history, care or treatment of the gender-related identity, consistent and uniform assertion of the gender-related identity or any other evidence that the gender-related identity is sincerely held, part of a person's core identity or not being asserted for an improper purpose.
v. "good faith" means that degree of diligence which a reasonable person would exercise in the performance of legal duties and obligations;
vi. "good faith efforts" shall include, but not be limited to, those reasonable initial efforts necessary to comply with statutory or regulatory requirements and additional or substituted efforts when it is determined that such initial efforts will not be sufficient to comply with such requirements;
vii. "marital status" means being single, married as recognized by the state of Connecticut, widowed, separated or divorced;
viii. "mental disability" means one or more mental disorders, as defined in the most recent edition of the American Psychiatric Association's "Diagnostic and Statistical Manual of Mental Disorders", or a record of or regarding a person as having one or more such disorders;
ix. "minority business enterprise" means any small contractor or supplier of materials fifty-one percent or more of the capital stock, if any, or assets of which is owned by a person or persons: (1) who are active in the daily affairs of the enterprise, (2) who have the power to direct the management and policies of the enterprise, and (3) who are members of a minority, as such term is defined in subsection (a) of Connecticut General Statutes § 32-9n; and
x. "public works contract" means any agreement between any individual, firm or corporation and the State or any political subdivision of the State other than a municipality for construction, rehabilitation, conversion, extension, demolition or repair of a public building, highway or other changes or improvements in real property, or which is financed in whole or in part by the State, including, but not limited to, matching expenditures, grants, loans, insurance or guarantees.

For purposes of this Section, the terms "Contract" and "contract" do not include a contract where each contractor is (1) a political subdivision of the state, including, but not limited to, a municipality, (2) a quasi-public agency, as defined in Conn. Gen. Stat. Section 1-120, (3) any other state, including but not limited to any federally recognized Indian tribal governments, as

defined in Conn. Gen. Stat. Section 1-267, (4) the federal government, (5) a foreign government, or (6) an agency of a subdivision, agency, state or government described in the immediately preceding enumerated items (1), (2), (3), (4) or (5).

(b) (1) The Contractor agrees and warrants that in the performance of the Contract such Contractor will not discriminate or permit discrimination against any person or group of persons on the grounds of race, color, religious creed, age, marital status, national origin, ancestry, sex, gender identity or expression, mental retardation, mental disability or physical disability, including, but not limited to, blindness, unless it is shown by such Contractor that such disability prevents performance of the work involved, in any manner prohibited by the laws of the United States or of the State of Connecticut; and the Contractor further agrees to take affirmative action to insure that applicants with job-related qualifications are employed and that employees are treated when employed without regard to their race, color, religious creed, age, marital status, national origin, ancestry, sex, gender identity or expression, mental retardation, mental disability or physical disability, including, but not limited to, blindness, unless it is shown by the Contractor that such disability prevents performance of the work involved; (2) the Contractor agrees, in all solicitations or advertisements for employees placed by or on behalf of the Contractor, to state that it is an "affirmative action-equal opportunity employer" in accordance with regulations adopted by the Commission; (3) the Contractor agrees to provide each labor union or representative of workers with which the Contractor has a collective bargaining Agreement or other contract or understanding and each vendor with which the Contractor has a contract or understanding, a notice to be provided by the Commission, advising the labor union or workers' representative of the Contractor's commitments under this section and to post copies of the notice in conspicuous places available to employees and applicants for employment; (4) the Contractor agrees to comply with each provision of this Section and Connecticut General Statutes §§ 46a-68e and 46a-68f and with each regulation or relevant order issued by said Commission pursuant to Connecticut General Statutes §§ 46a-56, 46a-68e and 46a-68f; and (5) the Contractor agrees to provide the Commission on Human Rights and Opportunities with such information requested by the Commission, and permit access to pertinent books, records and accounts, concerning the employment practices and procedures of the Contractor as relate to the provisions of this Section and Connecticut General Statutes § 46a-56. If the contract is a public works contract, the Contractor agrees and warrants that he will make good faith efforts to employ minority business enterprises as subcontractors and suppliers of materials on such public works projects.

(c) Determination of the Contractor's good faith efforts shall include, but shall not be limited to, the following factors: The Contractor's employment and subcontracting policies, patterns and practices; affirmative advertising, recruitment and training; technical assistance activities and such other reasonable activities or efforts as the Commission may prescribe that are designed to ensure the participation of minority business enterprises in public works projects.

(d) The Contractor shall develop and maintain adequate documentation, in a manner prescribed by the Commission, of its good faith efforts.

(e) The Contractor shall include the provisions of subsection (b) of this Section in every subcontract or purchase order entered into in order to fulfill any obligation of a contract with the State and such provisions shall be binding on a subcontractor, vendor or manufacturer unless exempted by regulations or orders of the Commission. The Contractor shall take such action with respect to any such subcontract or purchase order as the Commission may direct as a means of enforcing such provisions including sanctions for noncompliance in accordance with Connecticut General Statutes §46a-56; provided if such Contractor becomes involved in, or is threatened with,

litigation with a subcontractor or vendor as a result of such direction by the Commission, the Contractor may request the State of Connecticut to enter into any such litigation or negotiation prior thereto to protect the interests of the State and the State may so enter.

(f) The Contractor agrees to comply with the regulations referred to in this Section as they exist on the date of this Contract and as they may be adopted or amended from time to time during the term of this Contract and any amendments thereto.

(g) (1) The Contractor agrees and warrants that in the performance of the Contract such Contractor will not discriminate or permit discrimination against any person or group of persons on the grounds of sexual orientation, in any manner prohibited by the laws of the United States or the State of Connecticut, and that employees are treated when employed without regard to their sexual orientation; (2) the Contractor agrees to provide each labor union or representative of workers with which such Contractor has a collective bargaining Agreement or other contract or understanding and each vendor with which such Contractor has a contract or understanding, a notice to be provided by the Commission on Human Rights and Opportunities advising the labor union or workers' representative of the Contractor's commitments under this section, and to post copies of the notice in conspicuous places available to employees and applicants for employment; (3) the Contractor agrees to comply with each provision of this section and with each regulation or relevant order issued by said Commission pursuant to Connecticut General Statutes § 46a-56; and (4) the Contractor agrees to provide the Commission on Human Rights and Opportunities with such information requested by the Commission, and permit access to pertinent books, records and accounts, concerning the employment practices and procedures of the Contractor which relate to the provisions of this Section and Connecticut General Statutes § 46a-56.

(h) The Contractor shall include the provisions of the foregoing paragraph in every subcontract or purchase order entered into in order to fulfill any obligation of a contract with the State and such provisions shall be binding on a subcontractor, vendor or manufacturer unless exempted by regulations or orders of the Commission. The Contractor shall take such action with respect to any such subcontract or purchase order as the Commission may direct as a means of enforcing such provisions including sanctions for noncompliance in accordance with Connecticut General Statutes § 46a-56; provided, if such Contractor becomes involved in, or is threatened with, litigation with a subcontractor or vendor as a result of such direction by the Commission, the Contractor may request the State of Connecticut to enter into any such litigation or negotiation prior thereto to protect the interests of the State and the State may so enter."

The Nondiscrimination Certifications can be found at the Office of Policy and Management website.

http://www.ct.gov/opm/cwp/view.asp?a=2982&Q=390928

11. Whistleblower Provision

The following clause is applicable if the Contract has a value of Five Million Dollars ($5,000,000) or more.

Whistleblowing. This Contract may be subject to the provisions of Section 4-61dd of the Connecticut General Statutes. In accordance with this statute, if an officer, employee or appointing authority of the Contractor takes or threatens to take any personnel action against any employee of the Contractor in retaliation for such employee's disclosure of information to any employee of the contracting state or quasi-public agency or the Auditors of Public Accounts or the Attorney General under the provisions

of subsection (a) of such statute, the Contractor shall be liable for a civil penalty of not more than five thousand dollars for each offense, up to a maximum of twenty per cent of the value of this Contract. Each violation shall be a separate and distinct offense and in the case of a continuing violation, each calendar day's continuance of the violation shall be deemed to be a separate and distinct offense. The State may request that the Attorney General bring a civil action in the Superior Court for the Judicial District of Hartford to seek imposition and recovery of such civil penalty. In accordance with subsection (f) of such statute, each large state contractor, as defined in the statute, shall post a notice of the provisions of the statute relating to large state contractors in a conspicuous place which is readily available for viewing by the employees of the Contractor.

12. Connecticut Freedom of Information Act

(a) Disclosure of Records. This Contract may be subject to the provisions of section 1-218 of the Connecticut General Statutes. In accordance with this statute, each contract in excess of two million five hundred thousand dollars between a public agency and a person for the performance of a governmental function shall (a) provide that the public agency is entitled to receive a copy of records and files related to the performance of the governmental function, and (b) indicate that such records and files are subject to FOIA and may be disclosed by the public agency pursuant to FOIA. No request to inspect or copy such records or files shall be valid unless the request is made to the public agency in accordance with FOIA. Any complaint by a person who is denied the right to inspect or copy such records or files shall be brought to the Freedom of Information Commission in accordance with the provisions of sections 1-205 and 1-206 of the Connecticut General Statutes.

(b) Confidential Information. The State will afford due regard to the Contractor's request for the protection of proprietary or confidential information which the State receives from the Contractor. However, all materials associated with the Contract are subject to the terms of the FOIA and all corresponding rules, regulations and interpretations. In making such a request, the Contractor may not merely state generally that the materials are proprietary or confidential in nature and not, therefore, subject to release to third parties. Those particular sentences, paragraphs, pages or sections that the Contractor believes are exempt from disclosure under the FOIA must be specifically identified as such. Convincing explanation and rationale sufficient to justify each exemption consistent with the FOIA must accompany the request. The rationale and explanation must be stated in terms of the prospective harm to the competitive position of the Contractor that would result if the identified material were to be released and the reasons why the materials are legally exempt from release pursuant to the FOIA. To the extent that any other provision or part of the Contract conflicts or is in any way inconsistent with this section, this section controls and shall apply and the conflicting provision or part shall not be given effect. If the Contractor indicates that certain documentation is submitted in confidence, by specifically and clearly marking the documentation as "CONFIDENTIAL," DOT will first review the Contractor's claim for consistency with the FOIA (that is, review that the documentation is actually a trade secret or commercial or financial information and not required by statute), and if determined to be consistent, will endeavor to keep such information confidential to the extent permitted by law. See, *e.g.*, Conn. Gen. Stat. §1-210(b)(5)(A-B). The State, however, has no obligation to initiate, prosecute or defend any legal proceeding or to seek a protective order or other similar relief to prevent disclosure of any information that is sought pursuant to a FOIA request. Should the State withhold such documentation from a Freedom of Information requester and a complaint be brought to the Freedom of Information Commission, the Contractor shall have the burden of cooperating with DOT in defense of that action and in terms of establishing the availability of any FOIA exemption in any proceeding where it is an issue. In no event shall the State have any liability for the

disclosure of any documents or information in its possession which the State believes are required to be disclosed pursuant to the FOIA or other law.

13. Service of Process

The Contractor, if not a resident of the State of Connecticut, or, in the case of a partnership, the partners, if not residents, hereby appoints the Secretary of State of the State of Connecticut, and his successors in office, as agent for service of process for any action arising out of or as a result of this Contract; such appointment to be in effect throughout the life of this Contract and six (6) years thereafter.

14. Substitution of Securities for Retainages on State Contracts and Subcontracts

This Contract is subject to the provisions of Section 3-ll2a of the General Statutes of the State of Connecticut, as revised.

15. Health Insurance Portability and Accountability Act of 1996 (HIPAA)

The Contractor shall comply, if applicable, with the Health Insurance Portability and Accountability Act of 1996 and, pursuant thereto, the provisions attached at Exhibit D, and hereby made part of this Contract.

16. Forum and Choice of Law

Forum and Choice of Law. The parties deem the Contract to have been made in the City of Hartford, State of Connecticut. Both parties agree that it is fair and reasonable for the validity and construction of the Contract to be, and it shall be, governed by the laws and court decisions of the State of Connecticut, without giving effect to its principles of conflicts of laws. To the extent that any immunities provided by Federal law or the laws of the State of Connecticut do not bar an action against the State, and to the extent that these courts are courts of competent jurisdiction, for the purpose of venue, the complaint shall be made returnable to the Judicial District of Hartford only or shall be brought in the United States District Court for the District of Connecticut only, and shall not be transferred to any other court, provided, however, that nothing here constitutes a waiver or compromise of the sovereign immunity of the State of Connecticut. The Contractor waives any objection which it may now have or will have to the laying of venue of any Claims in any forum and further irrevocably submits to such jurisdiction in any suit, action or proceeding.

17. Summary of State Ethics Laws

Pursuant to the requirements of section 1-101qq of the Connecticut General Statutes, the summary of State ethics laws developed by the State Ethics Commission pursuant to section 1-81b of the Connecticut General Statutes is incorporated by reference into and made a part of the Contract as if the summary had been fully set forth in the Contract.

18. Audit and Inspection of Plants, Places of Business and Records

(a) The State and its agents, including, but not limited to, the Connecticut Auditors of Public Accounts, Attorney General and State's Attorney and their respective agents, may, at reasonable hours, inspect and examine all of the parts of the Contractor's and Contractor Parties' plants and places of business which, in any way, are related to, or involved in, the performance of this Contract. For the purposes of this Section, "Contractor Parties" means the Contractor's members, directors, officers, shareholders, partners, managers, principal officers,

representatives, agents, servants, consultants, employees or any one of them or any other person or entity with whom the Contractor is in privity of oral or written contract and the Contractor intends for such other person or entity to Perform under the Contract in any capacity.

(b) The Contractor shall maintain, and shall require each of the Contractor Parties to maintain, accurate and complete Records. The Contractor shall make all of its and the Contractor Parties' Records available at all reasonable hours for audit and inspection by the State and its agents.

(c) The State shall make all requests for any audit or inspection in writing and shall provide the Contractor with at least twenty-four (24) hours' notice prior to the requested audit and inspection date. If the State suspects fraud or other abuse, or in the event of an emergency, the State is not obligated to provide any prior notice.

(d) The Contractor shall keep and preserve or cause to be kept and preserved all of its and Contractor Parties' Records until three (3) years after the latter of (i) final payment under this Agreement, or (ii) the expiration or earlier termination of this Agreement, as the same may be modified for any reason. The State may request an audit or inspection at any time during this period. If any Claim or audit is started before the expiration of this period, the Contractor shall retain or cause to be retained all Records until all Claims or audit findings have been resolved.

(e) The Contractor shall cooperate fully with the State and its agents in connection with an audit or inspection. Following any audit or inspection, the State may conduct and the Contractor shall cooperate with an exit conference.

(f) The Contractor shall incorporate this entire Section verbatim into any contract or other agreement that it enters into with any Contractor Party.

19.Campaign Contribution Restriction

For all State contracts, defined in Conn. Gen. Stat. §9-612(g)(1) as having a value in a calendar year of $50,000 or more, or a combination or series of such agreements or contracts having a value of $100,000 or more, the authorized signatory to this Agreement expressly acknowledges receipt of the State Elections Enforcement Commission's notice advising state contractors of state campaign contribution and solicitation prohibitions, and will inform its principals of the contents of the notice, as set forth in "Notice to Executive Branch State Contractors and Prospective State Contractors of Campaign Contribution and Solicitation Limitations," attached as Exhibit E.

20. Tangible Personal Property

(a) The Contractor on its behalf and on behalf of its Affiliates, as defined below, shall comply with the provisions of Conn. Gen. Stat. §12-411b, as follows:

(1) For the term of the Contract, the Contractor and its Affiliates shall collect and remit to the State of Connecticut, Department of Revenue Services, any Connecticut use tax due under the provisions of Chapter 219 of the Connecticut General Statutes for items of tangible personal property sold by the Contractor or by any of its Affiliates in the same manner as if the Contractor and such Affiliates were engaged in the business of selling tangible personal property for use in Connecticut and had sufficient nexus under the provisions of Chapter 219 to be required to collect Connecticut use tax;

(2) A customer's payment of a use tax to the Contractor or its Affiliates relieves the customer of liability for the use tax;

(3) The Contractor and its Affiliates shall remit all use taxes they collect from customers on or before the due date specified in the Contract, which may not be later than the last day of the month next succeeding the end of a calendar quarter or other tax collection period during which the tax was collected;

(4) The Contractor and its Affiliates are not liable for use tax billed by them but not paid to them by a customer; and

(5) Any Contractor or Affiliate who fails to remit use taxes collected on behalf of its customers by the due date specified in the Contract shall be subject to the interest and penalties provided for persons required to collect sales tax under chapter 219 of the general statutes.

(b) For purposes of this section of the Contract, the word "Affiliate" means any person, as defined in section 12-1 of the general statutes, that controls, is controlled by, or is under common control with another person. A person controls another person if the person owns, directly or indirectly, more than ten per cent of the voting securities of the other person. The word "voting security" means a security that confers upon the holder the right to vote for the election of members of the board of directors or similar governing body of the business, or that is convertible into, or entitles the holder to receive, upon its exercise, a security that confers such a right to vote. "Voting security" includes a general partnership interest.

(c) The Contractor represents and warrants that each of its Affiliates has vested in the Contractor plenary authority to so bind the Affiliates in any agreement with the State of Connecticut. The Contractor on its own behalf and on behalf of its Affiliates shall also provide, no later than 30 days after receiving a request by the State's contracting authority, such information as the State may require to ensure, in the State's sole determination, compliance with the provisions of Chapter 219 of the Connecticut General Statutes, including, but not limited to, §12-411b.

21. Bid Rigging and/or Fraud – Notice to Contractor

The Connecticut Department of Transportation is cooperating with the U.S. Department of Transportation and the Justice Department in their investigation into highway construction contract bid rigging and/or fraud.

A toll-free "HOT LINE" telephone number 800-424-9071 has been established to receive information from contractors, subcontractors, manufacturers, suppliers or anyone with knowledge of bid rigging and/or fraud, either past or current. The "HOT LINE" telephone number will be available during normal working hours (8:00 am – 5:00 pm EST). Information will be treated confidentially and anonymity respected.

22. Consulting Agreement Affidavit

The Contractor shall comply with Connecticut General Statutes Section 4a-81(a) and 4a-81(b), as revised. Pursuant to Public Act 11-229, after the initial submission of the form, if there is a change in the information contained in the form, a contractor shall submit the updated form, as applicable, either (i) not later than thirty (30) days after the effective date of such change or (ii) prior to execution of any new contract, whichever is earlier.

The Affidavit/Form may be submitted in written format or electronic format through the Department of Administrative Services (DAS) website.

EXHIBIT A

FEDERAL TRANSIT ADMINISTRATION

Construction Contracts Required Clauses

1. Notification of Federal Participation
2. Fly America Requirements
3. Buy America Requirements (See Certification - Exhibit A, page 24)
4. Cargo Preference Requirements
5. Seismic Safety Requirements
6. Energy Conservation Requirements
7. Clean Water Requirements
8. Lobbying (See Certification - Exhibit B, page 25)
9. Access to Records and Reports
10. Federal Changes
11. Bonding Requirements
12. Clean Air
13. Recycled Products
14. Davis-Bacon and Copeland Anti-Kickback Acts
15. Contract Work Hours and Safety Standards Act
16. No Government Obligation to Third Parties
17. Program Fraud and False or Fraudulent Statements and Related Acts
18. Termination
19. Government-wide Debarment and Suspension (Nonprocurement)
20. Civil Rights Requirements
21. Breaches and Dispute Resolution
22. Transit Employee Protective Agreements
23. Disadvantaged Business Enterprises (DBE)
24. Incorporation of Federal Transit Administration (FTA) Terms
25. Access for Individuals with Disabilities
26. National Intelligent Transportation Systems Architecture and Standards
27. Assignability Clause

1. NOTIFICATION OF FEDERAL PARTICIPATION

To the extent required by law, the State agrees that any request for proposals, solicitation, award notice, press release, or other publication involving the distribution of FTA assistance for the Program or the Project having an aggregate value of $500,000 or more, shall indicate that FTA is the Federal agency that is providing the Federal assistance, the Catalog of Federal Domestic Assistance Number of the program from which the Federal assistance is authorized, as may be applicable, and the amount of Federal assistance FTA provided.

---

2. FLY AMERICA REQUIREMENTS
49 U.S.C. § 40118
41 CFR Part 301-10

Applicability to Contracts

The Fly America requirements apply to the transportation of persons or property, by air, between a place in the U.S. and a place outside the U.S., or between places outside the U.S., when the FTA will participate in the costs of such air transportation. Transportation on a foreign air carrier is permissible when provided by a foreign air carrier under a code share agreement when the ticket identifies the U.S. air carrier's designator code and flight number. Transportation by a foreign air carrier is also permissible if there is a bilateral or multilateral air transportation agreement to which the U.S. Government and a foreign government are parties and which the Federal DOT has determined meets the requirements of the Fly America Act.

Flow Down Requirements

The Fly America requirements flow down from FTA recipients and subrecipients to first tier contractors, who are responsible for ensuring that lower tier contractors and subcontractors are in compliance.

Fly America Requirements

The Contractor agrees to comply with 49 U.S.C. 40118 (the "Fly America" Act) in accordance with the General Services Administration's regulations at 41 CFR Part 301-10, which provide that recipients and subrecipients of Federal funds and their contractors are required to use U.S. Flag air carriers for U.S Government-financed international air travel and transportation of their personal effects or property, to the extent such service is available, unless travel by foreign air carrier is a matter of necessity, as defined by the Fly America Act. The Contractor shall submit, if a foreign air carrier was used, an appropriate certification or memorandum adequately explaining why service by a U.S. flag air carrier was not available or why it was necessary to use a foreign air carrier and shall, in any event, provide a certificate of compliance with the Fly America requirements. The Contractor agrees to include the requirements of this section in all subcontracts that may involve international air transportation.

3. BUY AMERICA REQUIREMENTS
49 U.S.C. 5323(j)
49 CFR Part 661

Applicability to Contracts
The Buy America requirements apply to the following types of contracts: Construction Contracts and Acquisition of Goods or Rolling Stock (valued at more than $100,000).

Flow Down
The Buy America requirements flow down from FTA recipients and subrecipients to first tier contractors, who are responsible for ensuring that lower tier contractors and subcontractors are in compliance. The $100,000 threshold applies only to the grantee contract, subcontracts under that amount are subject to Buy America.

Buy America - The contractor agrees to comply with 49 U.S.C. 5323(j) and 49 C.F.R. Part 661, which provide that Federal funds may not be obligated unless steel, iron, and manufactured products used in FTA-funded projects are produced in the United States, unless a waiver has been granted by FTA or the product is subject to a general waiver. General waivers are listed in 49 C.F.R. 661.7, and include final assembly in the United States for 15 passenger vans and 15 passenger wagons produced by Chrysler Corporation, and microcomputer equipment and software. Separate requirements for rolling stock are set out at 49 U.S.C. 5323(j)(2)(C) and 49 C.F.R. 661.11. Rolling stock must be assembled in the United States and have a 60 percent domestic content.

A bidder or offeror must submit to the FTA recipient the appropriate Buy America certification (See Exhibit A of these FTA required clauses) with all bids or offers on FTA-funded contracts, except those subject to a general waiver. Bids or offers that are not accompanied by a completed Buy America certification must be rejected as nonresponsive. This requirement does not apply to lower tier subcontractors.

---

4. CARGO PREFERENCE REQUIREMENTS
46 U.S.C. 1241
46 CFR Part 381

Applicability to Contracts
The Cargo Preference requirements apply to all contracts involving equipment, materials, or commodities which may be transported by ocean vessels.

Flow Down
The Cargo Preference requirements apply to all subcontracts when the subcontract may be involved with the transport of equipment, material, or commodities by ocean vessel.
Cargo Preference - Use of United States-Flag Vessels - The contractor agrees: a. to use privately owned United States-Flag commercial vessels to ship at least 50 percent of the gross tonnage (computed separately for dry bulk carriers, dry cargo liners, and tankers) involved, whenever shipping any equipment, material, or commodities pursuant to the underlying contract to the extent such vessels are available at fair and reasonable rates for United States-Flag commercial vessels; b. to furnish within 20 working days following the date of loading for shipments originating within the United States or within 30 working days following the date of leading for shipments originating outside the United States, a legible copy of a rated, "on-board" commercial ocean bill-of -lading in English for

each shipment of cargo described in the preceding paragraph to the Division of National Cargo, Office of Market Development, Maritime Administration, Washington, DC 20590 and to the FTA recipient (through the contractor in the case of a subcontractor's bill-of-lading.) c. to include these requirements in all subcontracts issued pursuant to this contract when the subcontract may involve the transport of equipment, material, or commodities by ocean vessel.

---

5. SEISMIC SAFETY REQUIREMENTS
42 U.S.C. 7701 et seq. 49
CFR Part 41

Applicability to Contracts
The Seismic Safety requirements apply only to contracts for the construction of new buildings or additions to existing buildings.

Flow Down
The Seismic Safety requirements flow down from FTA recipients and subrecipients to first tier contractors to assure compliance, with the applicable building standards for Seismic Safety, including the work performed by all subcontractors.

Seismic Safety - The contractor agrees that any new building or addition to an existing building will be designed and constructed in accordance with the standards for Seismic Safety required in Department of Transportation Seismic Safety Regulations 49 CFR Part 41 and will certify to compliance to the extent required by the regulation. The contractor also agrees to ensure that all work performed under this contract including work performed by a subcontractor is in compliance with the standards required by the Seismic Safety Regulations and the certification of compliance issued on the project.

---

6. ENERGY CONSERVATION REQUIREMENTS
42 U.S.C. 6321 et seq.
49 CFR Part 18

Applicability to Contracts
The Energy Conservation requirements are applicable to all contracts.

Flow Down
The Energy Conservation requirements extend to all third party contractors and their contracts at every tier and subrecipients and their subagreements at every tier.

Energy Conservation - The contractor agrees to comply with mandatory standards and policies relating to energy efficiency which are contained in the state energy conservation plan issued in compliance with the Energy Policy and Conservation Act.

7. CLEAN WATER REQUIREMENTS
33 U.S.C. 1251

Applicability to Contracts
The Clean Water requirements apply to each contract and subcontract which exceeds $100,000.

Flow Down
The Clean Water requirements flow down to FTA recipients and subrecipients at every tier.

Clean Water - (1) The Contractor agrees to comply with all applicable standards, orders or regulations issued pursuant to the Federal Water Pollution Control Act, as amended, 33 U.S.C. 1251 et seq. The Contractor agrees to report each violation to the Purchaser and understands and agrees that the Purchaser will, in turn, report each violation as required to assure notification to FTA and the appropriate EPA Regional Office.

(2) The Contractor also agrees to include these requirements in each subcontract exceeding $100,000 financed in whole or in part with Federal assistance provided by FTA.

---

8. LOBBYING
31 U.S.C. 1352
49 CFR Part 19
49 CFR Part 20

Applicability to Contracts
The Lobbying requirements apply to Construction/Architectural and Engineering/Acquisition of Rolling Stock/Professional Service Contract/Operational Service Contract/Turnkey contracts.

Flow Down
The Lobbying requirements mandate the maximum flow down, pursuant to Byrd Anti-Lobbying Amendment, 31 U.S.C. § 1352(b)(5) and 49 C.F.R. Part 19, Appendix A, Section 7.

Byrd Anti-Lobbying Amendment, 31 U.S.C. 1352, as amended by the Lobbying Disclosure Act of 1995, P.L. 104-65 [to be codified at 2 U.S.C. § 1601, et seq.] - Contractors who apply or bid for an award of $100,000 or more **shall file the certification required (See Exhibit B of these FTA required clauses)** by 49 CFR part 20, "New Restrictions on Lobbying." Each tier certifies to the tier above that it will not and has not used Federal appropriated funds to pay any person or organization for influencing or attempting to influence an officer or employee of any agency, a member of Congress, officer or employee of Congress, or an employee of a member of Congress in connection with obtaining any Federal contract, grant or any other award covered by 31 U.S.C. 1352. Each tier shall also disclose the name of any registrant under the Lobbying Disclosure Act of 1995 who has made lobbying contacts on its behalf with non-Federal funds with respect to that Federal contract, grant or award covered by 31 U.S.C. 1352. Such disclosures are forwarded from tier to tier up to the recipient.

---

9. ACCESS TO RECORDS AND REPORTS
49 U.S.C. 5325
18 CFR 18.36 (i)
49 CFR 633.17

Applicability to Contracts
Reference Chart "Requirements for Access to Records and Reports by Type of Contracts"

Flow Down
FTA does not require the inclusion of these requirements in subcontracts.

Access to Records - The following access to records requirements apply to this Contract:

1. Where the Purchaser is not a State but a local government and is the FTA Recipient or a subgrantee of the FTA Recipient in accordance with 49 C.F.R. 18.36(i), the Contractor agrees to provide the Purchaser, the FTA Administrator, the Comptroller General of the United States or any of their authorized representatives access to any books, documents, papers and records of the Contractor which are directly pertinent to this contract for the purposes of making audits, examinations, excerpts and transcriptions. Contractor also agrees, pursuant to 49 C.F.R. 633.17 to provide the FTA Administrator or his authorized representatives including any PMO Contractor access to Contractor's records and construction sites pertaining to a major capital project, defined at 49 U.S.C. 5302(a)1, which is receiving federal financial assistance through the programs described at 49 U.S.C. 5307, 5309 or 5311.

2. Where the Purchaser is a State and is the FTA Recipient or a subgrantee of the FTA Recipient in accordance with 49 C.F.R. 633.17, Contractor agrees to provide the Purchaser, the FTA Administrator or his authorized representatives, including any PMO Contractor, access to the Contractor's records and construction sites pertaining to a major capital project, defined at 49 U.S.C. 5302(a)1, which is receiving federal financial assistance through the programs described at 49 U.S.C. 5307, 5309 or 5311. By definition, a major capital project excludes contracts of less than the simplified acquisition threshold currently set at $100,000.

3. Where the Purchaser enters into a negotiated contract for other than a small purchase or under the simplified acquisition threshold and is an institution of higher education, a hospital or other non-profit organization and is the FTA Recipient or a subgrantee of the FTA Recipient in accordance with 49 C.F.R. 19.48, Contractor agrees to provide the Purchaser, FTA Administrator, the Comptroller General of the United States or any of their duly authorized representatives with access to any books, documents, papers and record of the Contractor which are directly pertinent to this contract for the purposes of making audits, examinations, excerpts and transcriptions.

4. Where any Purchaser which is the FTA Recipient or a subgrantee of the FTA Recipient in accordance with 49 U.S.C. 5325(a) enters into a contract for a capital project or improvement (defined at 49 U.S.C. 5302(a)1) through other than competitive bidding, the Contractor shall make available records related to the contract to the Purchaser, the Secretary of Transportation and the Comptroller General or any authorized officer or employee of any of them for the purposes of conducting an audit and inspection.

5. The Contractor agrees to permit any of the foregoing parties to reproduce by any means whatsoever or to copy excerpts and transcriptions as reasonably needed.

6. The Contractor agrees to maintain all books, records, accounts and reports required under this contract for a period of not less than three years after the date of termination or expiration of this contract, except in the event of litigation or settlement of claims arising from the performance of this contract, in which case Contractor agrees to maintain same until the Purchaser, the FTA Administrator, the Comptroller General, or any of their duly authorized representatives, have disposed of all such litigation, appeals, claims or exceptions related thereto. Reference 49 CFR 18.39(i)(11).

7. FTA does not require the inclusion of these requirements in subcontracts.

Requirements for Access to Records and Reports by Types of Contract

Contract Characteristics		Operational Service Contract	Turnkey	Construction	Architectural Engineering	Acquisition of Rolling Stock	Professional Services
I State Grantees a. Contracts below SAT ($100,000) b. Contracts above $100,000/Capital Projects		None None unless[1] non-competitive award	Those imposed on state pass thru to Contractor	None Yes, if non-competitive award or if funded thru[2] 5307/5309/5311	None None unless non-competitive award	None None unless non-competitive award	None None unless non-competitive award
II Non State Grantees a. Contracts below SAT ($100,000) b. Contracts above $100,000/Capital Projects		Yes[3] Yes[3]	Those imposed on non-state Grantee pass thru to Contractor	Yes Yes	Yes Yes	Yes Yes	Yes Yes

Sources of Authority:
[1] 49 USC 5325 (a)
[2] 49 CFR 633.17
[3] 18 CFR 18.36 (i)

---

10. FEDERAL CHANGES
49 CFR Part 18

Applicability to Contracts
The Federal Changes requirement applies to all contracts.

Flow Down
The Federal Changes requirement flows down appropriately to each applicable changed requirement.

Federal Changes - Contractor shall at all times comply with all applicable FTA regulations, policies, procedures and directives, including without limitation those listed directly or by reference in the Master Agreement between Purchaser and FTA, as they may be amended or promulgated from time to time during the term of this contract. Contractor's failure to so comply shall constitute a material breach of this contract.

---

11. BONDING REQUIREMENTS

Refer to the Standard Specifications for Roads, Bridges and Incidental Construction, FORM 816, Section 1.02.01 – "Contract Bidding and Award" - Bonding requirements are addressed in the Connecticut Department of Transportation's Construction Contract Bidding and Award Manual.

12. CLEAN AIR
42 U.S.C. 7401 et seq
40 CFR 15.61
49 CFR Part 18

Applicability to Contracts
The Clean Air requirements apply to all contracts exceeding $100,000, including indefinite quantities where the amount is expected to exceed $100,000 in any year.

Flow Down
The Clean Air requirements flow down to all subcontracts which exceed $100,000.

Clean Air - (1) The Contractor agrees to comply with all applicable standards, orders or regulations issued pursuant to the Clean Air Act, as amended, 42 U.S.C. §§ 7401 et seq. The Contractor agrees to report each violation to the Purchaser and understands and agrees that the Purchaser will, in turn, report each violation as required to assure notification to FTA and the appropriate EPA Regional Office.

(2) The Contractor also agrees to include these requirements in each subcontract exceeding $100,000 financed in whole or in part with Federal assistance provided by FTA.

13. RECYCLED PRODUCTS
42 U.S.C. 6962
40 CFR Part 247
Executive Order 12873

Applicability to Contracts
The Recycled Products requirements apply to all contracts for items designated by the EPA, when the purchaser or contractor procures $10,000 or more of one of these items during the fiscal year, or has procured $10,000 or more of such items in the previous fiscal year, using Federal funds. New requirements for "recovered materials" will become effective May 1, 1996. These new regulations apply to all procurement actions involving items designated by the EPA, where the procuring agency purchases $10,000 or more of one of these items in a fiscal year, or when the cost of such items purchased during the previous fiscal year was $10,000.

Flow Down
These requirements flow down to all contractor and subcontractor tiers.

Recovered Materials - The contractor agrees to comply with all the requirements of Section 6002 of the Resource Conservation and Recovery Act (RCRA), as amended (42 U.S.C. 6962), including but not limited to the regulatory provisions of 40 CFR Part 247, and Executive Order 12873, as they apply to the procurement of the items designated in Subpart B of 40 CFR Part 247.

---

14. DAVIS-BACON AND COPELAND ANTI-KICKBACK ACTS

Background and Application

The Davis-Bacon and Copeland Acts are codified at 40 USC 3141, *et seq.* and 18 USC 874. The Acts apply to grantee construction contracts and subcontracts that "at least partly are financed by a loan or grant from the Federal Government." 40 USC 3145(a), 29 CFR 5.2(h), 49 CFR 18.36(i)(5). The Acts apply to any construction contract over $2,000. 40 USC 3142(a), 29 CFR 5.5(a). 'Construction,' for purposes of the Acts, includes "actual construction, alteration and/or repair, including painting and decorating." 29 CFR 5.5(a). The requirements of both Acts are incorporated into a single clause (*see* 29 CFR 3.11) enumerated at 29 CFR 5.5(a) and reproduced below.

The clause language is drawn directly from 29 CFR 5.5(a) and any deviation from the model clause below should be coordinated with counsel to ensure the Acts' requirements are satisfied.

Davis-Bacon and Copeland Anti-Kickback Acts

(1) **Minimum wages -** (i) All laborers and mechanics employed or working upon the site of the work (or under the United States Housing Act of 1937 or under the Housing Act of 1949 in the construction or development of the project), will be paid unconditionally and not less often than once a week, and without subsequent deduction or rebate on any account (except such payroll deductions as are permitted by regulations issued by the Secretary of Labor under the Copeland Act (29 CFR part 3)), the full amount of wages and bona fide fringe benefits (or cash equivalents thereof) due at time of payment computed at rates not less than those contained in the wage determination of the Secretary of Labor which is attached hereto and made a part hereof, regardless of any contractual relationship which may be alleged to exist between the contractor and such laborers and mechanics.

Contributions made or costs reasonably anticipated for bona fide fringe benefits under section 1(b)(2) of the Davis-Bacon Act on behalf of laborers or mechanics are considered wages paid to such laborers or mechanics, subject to the provisions of paragraph (1)(iv) of this section; also, regular contributions made or costs incurred for more than a weekly period (but not less often than quarterly) under plans, funds, or programs which cover the particular weekly period, are deemed to be constructively made or incurred during such weekly period. Such laborers and mechanics shall be paid the appropriate wage rate and fringe benefits on the wage determination for the classification of work actually performed, without regard to skill, except as provided in 29 CFR Part 5.5(a)(4). Laborers or mechanics performing work in more than one classification may be compensated at the rate specified for each classification for the time actually worked therein: Provided, that the employer's payroll records accurately set forth the time spent in each classification in which work is performed. The wage determination (including any additional classifications and wage rates conformed under paragraph (1)(ii) of this section) and the Davis-Bacon poster (WH-1321) shall be posted at all times by the contractor and its subcontractors at the site of the work in a prominent and accessible place where it can be easily seen by the workers.

(ii)(A) The contracting officer shall require that any class of laborers or mechanics, including helpers, which is not listed in the wage determination and which is to be employed under the contract shall be classified in conformance with the wage determination. The contracting officer shall approve an additional classification and wage rate and fringe benefits therefore only when the following criteria have been met:

(1) Except with respect to helpers as defined as 29 CFR 5.2(n)(4), the work to be performed by the classification requested is not performed by a classification in the wage determination; and

(2) The classification is utilized in the area by the construction industry; and

(3) The proposed wage rate, including any bona fide fringe benefits, bears a reasonable relationship to the wage rates contained in the wage determination; and

(4) With respect to helpers as defined in 29 CFR 5.2(n)(4), such a classification prevails in the area in which the work is performed.

(B) If the contractor and the laborers and mechanics to be employed in the classification (if known), or their representatives, and the contracting officer agree on the classification and wage rate (including the amount designated for fringe benefits where appropriate), a report of the action taken shall be sent by the contracting officer to the Administrator of the Wage and Hour Division, Employment Standards Administration, U.S. Department of Labor, Washington, DC 20210. The Administrator, or an authorized representative, will approve, modify, or disapprove every additional classification action within 30 days of receipt and so advise the contracting officer or will notify the contracting officer within the 30-day period that additional time is necessary.

(C) In the event the contractor, the laborers or mechanics to be employed in the classification or their representatives, and the contracting officer do not agree on the proposed classification and wage rate (including the amount designated for fringe benefits, where appropriate), the contracting officer shall refer the questions, including the views of all interested parties and the recommendation of the contracting officer, to the Administrator for determination. The Administrator, or an authorized representative, will issue a determination within 30 days of receipt and so advise the contracting officer or will notify the contracting officer within the 30-day period that additional time is necessary.

(D) The wage rate (including fringe benefits where appropriate) determined pursuant to paragraphs (a)(1)(ii) (B) or (C) of this section, shall be paid to all workers performing work in the classification under this contract from the first day on which work is performed in the classification.

(iii) Whenever the minimum wage rate prescribed in the contract for a class of laborers or mechanics includes a fringe benefit which is not expressed as an hourly rate, the contractor shall either pay the benefit as stated in the wage determination or shall pay another bona fide fringe benefit or an hourly cash equivalent thereof.

(iv) If the contractor does not make payments to a trustee or other third person, the contractor may consider as part of the wages of any laborer or mechanic the amount of any costs reasonably anticipated in providing bona fide fringe benefits under a plan or program, Provided, That the Secretary of Labor has found, upon the written request of the contractor, that the applicable standards of the Davis-Bacon Act have been met. The Secretary of Labor may require the contractor to set aside in a separate account assets for the meeting of obligations under the plan or program.

(v)(A) The contracting officer shall require that any class of laborers or mechanics which is not listed in the wage determination and which is to be employed under the contract shall be classified in conformance with the wage determination. The contracting officer shall approve an additional classification and wage rate and fringe benefits therefor only when the following criteria have been met:

(1) The work to be performed by the classification requested is not performed by a classification in the wage determination; and

(2) The classification is utilized in the area by the construction industry; and

(3) The proposed wage rate, including any bona fide fringe benefits, bears a reasonable relationship to the wage rates contained in the wage determination.

(B) If the contractor and the laborers and mechanics to be employed in the classification (if known), or their representatives, and the contracting officer agree on the classification and wage rate (including the amount designated for fringe benefits where appropriate), a report of the action taken shall be sent by the contracting officer to the Administrator of the Wage and Hour Division, Employment Standards Administration, Washington, DC 20210. The Administrator, or an authorized representative, will approve, modify, or disapprove every additional classification action within 30 days of receipt and so advise the contracting officer or will notify the contracting officer within the 30-day period that additional time is necessary.

(C) In the event the contractor, the laborers or mechanics to be employed in the classification or their representatives, and the contracting officer do not agree on the proposed classification and wage rate (including the amount designated for fringe benefits, where appropriate), the contracting officer shall refer the questions, including the views of all interested parties and the recommendation of the contracting officer, to the Administrator for determination. The Administrator, or an authorized representative, will issue a determination with 30 days of receipt and so advise the contracting officer or will notify the contracting officer within the 30-day period that additional time is necessary.

(D) The wage rate (including fringe benefits where appropriate) determined pursuant to paragraphs (a)(1)(v) (B) or (C) of this section, shall be paid to all workers performing work in the classification under this contract from the first day on which work is performed in the classification.

(2) **Withholding** - The State shall upon its own action or upon written request of an authorized representative of the Department of Labor withhold or cause to be withheld from the contractor under this contract or any other Federal contract with the same prime contractor, or any other federally-assisted contract subject to Davis-Bacon prevailing wage requirements, which is held by the same prime contractor, so much of the accrued payments or advances as may be considered necessary to pay laborers and mechanics, including apprentices, trainees, and helpers, employed by the contractor or any subcontractor the full amount of wages required by the contract. In the event of failure to pay any laborer or mechanic, including any apprentice, trainee, or helper, employed or working on the site of the work (or under the United States Housing Act of 1937 or under the Housing Act of 1949 in the construction or development of the project), all or part of the wages required by the contract, the State may, after written notice to the contractor, sponsor, applicant, or owner, take such action as may be necessary to cause the suspension of any further payment, advance, or guarantee of funds until such violations have ceased.

(3) **Payrolls and basic records** - (i) Payrolls and basic records relating thereto shall be maintained by the contractor during the course of the work and preserved for a period of three years thereafter for all laborers and mechanics working at the site of the work (or under the United States Housing Act of 1937, or under the Housing Act of 1949, in the construction or development of the project). Such records shall contain the name, address, and social security number of each such worker, his or her correct classification, hourly rates of wages paid (including rates of contributions or costs anticipated for bona fide fringe benefits or cash equivalents thereof of the types described in section 1(b)(2)(B) of the Davis-Bacon Act), daily and weekly number of hours worked, deductions made and actual wages paid. Whenever the Secretary of Labor has found under 29 CFR 5.5(a)(1)(iv) that the wages of any laborer or mechanic include the amount of any costs reasonably anticipated in providing benefits under a plan or program described in section 1(b)(2)(B) of the Davis-Bacon Act, the contractor shall maintain

records which show that the commitment to provide such benefits is enforceable, that the plan or program is financially responsible, and that the plan or program has been communicated in writing to the laborers or mechanics affected, and records which show the costs anticipated or the actual cost incurred in providing such benefits. Contractors employing apprentices or trainees under approved programs shall maintain written evidence of the registration of apprenticeship programs and certification of trainee programs, the registration of the apprentices and trainees, and the ratios and wage rates prescribed in the applicable programs.

(ii)(A) The contractor shall submit weekly for each week in which any contract work is performed a copy of all payrolls to the State for transmission to the Federal Transit Administration. The payrolls submitted shall set out accurately and completely all of the information required to be maintained under section 5.5(a)(3)(i) of Regulations, 29 CFR part 5. This information may be submitted in any form desired. Optional Form WH-347 is available for this purpose and may be purchased from the Superintendent of Documents (Federal Stock Number 029-005-00014-1), U.S. Government Printing Office, Washington, DC 20402. The prime contractor is responsible for the submission of copies of payrolls by all subcontractors.

(B) Each payroll submitted shall be accompanied by a "Statement of Compliance," signed by the contractor or subcontractor or his or her agent who pays or supervises the payment of the persons employed under the contract and shall certify the following:

(1) That the payroll for the payroll period contains the information required to be maintained under section 5.5(a)(3)(i) of Regulations, 29 CFR part 5 and that such information is correct and complete;

(2) That each laborer or mechanic (including each helper, apprentice, and trainee) employed on the contract during the payroll period has been paid the full weekly wages earned, without rebate, either directly or indirectly, and that no deductions have been made either directly or indirectly from the full wages earned, other than permissible deductions as set forth in Regulations, 29 CFR part 3;

(3) That each laborer or mechanic has been paid not less than the applicable wage rates and fringe benefits or cash equivalents for the classification of work performed, as specified in the applicable wage determination incorporated into the contract.

(C) The weekly submission of a properly executed certification set forth on the reverse side of Optional Form WH-347 shall satisfy the requirement for submission of the "Statement of Compliance" required by paragraph (a)(3)(ii)(B) of this section.

(D) The falsification of any of the above certifications may subject the contractor or subcontractor to civil or criminal prosecution under section 1001 of title 18 and section 231 of title 31 of the United States Code.

(iii) The contractor or subcontractor shall make the records required under paragraph (a)(3)(i) of this section available for inspection, copying, or transcription by authorized representatives of the Federal Transit Administration or the Department of Labor, and shall permit such representatives to interview employees during working hours on the job. If the contractor or subcontractor fails to submit the required records or to make them available, the Federal agency may, after written notice to the contractor, sponsor, applicant, or owner, take such action as may be necessary to cause the suspension of any further payment, advance, or guarantee of funds. Furthermore, failure to submit the required records upon request or to make such records available may be grounds for debarment action pursuant to 29 CFR 5.12.

(4) **Apprentices and trainees** - (i) Apprentices - Apprentices will be permitted to work at less than the predetermined rate for the work they performed when they are employed pursuant to and individually registered in a bona fide apprenticeship program registered with the U.S. Department of Labor, Employment and Training Administration, Bureau of Apprenticeship and Training, or with a State Apprenticeship Agency recognized by the Bureau, or if a person is employed in his or her first 90 days of probationary employment as an apprentice in such an apprenticeship program, who is not individually registered in the program, but who has been certified by the Bureau of Apprenticeship and Training or a State Apprenticeship Agency (where appropriate) to be eligible for probationary employment as an apprentice. The allowable ratio of apprentices to journeymen on the job site in any craft classification shall not be greater than the ratio permitted to the contractor as to the entire work force under the registered program. Any worker listed on a payroll at an apprentice wage rate, who is not registered or otherwise employed as stated above, shall be paid not less than the applicable wage rate on the wage determination for the classification of work actually performed. In addition, any apprentice performing work on the job site in excess of the ratio permitted under the registered program shall be paid not less than the applicable wage rate on the wage determination for the work actually performed. Where a contractor is performing construction on a project in a locality other than that in which its program is registered, the ratios and wage rates (expressed in percentages of the journeyman's hourly rate) specified in the contractor's or subcontractor's registered program shall be observed. Every apprentice must be paid at not less than the rate specified in the registered program for the apprentice's level of progress, expressed as a percentage of the journeymen hourly rate specified in the applicable wage determination. Apprentices shall be paid fringe benefits in accordance with the provisions of the apprenticeship program. If the apprenticeship program does not specify fringe benefits, apprentices must be paid the full amount of fringe benefits listed on the wage determination for the applicable classification. If the Administrator of the Wage and Hour Division of the U.S. Department of Labor determines that a different practice prevails for the applicable apprentice classification, fringes shall be paid in accordance with that determination. In the event the Bureau of Apprenticeship and Training, or a State Apprenticeship Agency recognized by the Bureau, withdraws approval of an apprenticeship program, the contractor will no longer be permitted to utilize apprentices at less than the applicable predetermined rate for the work performed until an acceptable program is approved.

(ii) Trainees - Except as provided in 29 CFR 5.16, trainees will not be permitted to work at less than the predetermined rate for the work performed unless they are employed pursuant to and individually registered in a program which has received prior approval, evidenced by formal certification by the U.S. Department of Labor, Employment and Training Administration. The ratio of trainees to journeymen on the job site shall not be greater than permitted under the plan approved by the Employment and Training Administration. Every trainee must be paid at not less than the rate specified in the approved program for the trainee's level of progress, expressed as a percentage of the journeyman hourly rate specified in the applicable wage determination. Trainees shall be paid fringe benefits in accordance with the provisions of the trainee program. If the trainee program does not mention fringe benefits, trainees shall be paid the full amount of fringe benefits listed on the wage determination unless the Administrator of the Wage and Hour Division determines that there is an apprenticeship program associated with the corresponding journeyman wage rate on the wage determination which provides for less than full fringe benefits for apprentices. Any employee listed on the payroll at a trainee rate who is not registered and participating in a training plan approved by the Employment and Training Administration shall be paid not less than the applicable wage rate on the wage determination for the classification of work actually performed. In addition, any trainee performing work on the job site in excess of the ratio permitted under the registered program shall be paid not less than the applicable wage rate on the wage determination for the work actually performed.

In the event the Employment and Training Administration withdraws approval of a training program, the contractor will no longer be permitted to utilize trainees at less than the applicable predetermined rate for the work performed until an acceptable program is approved.

(iii) Equal employment opportunity - The utilization of apprentices, trainees and journeymen under this part shall be in conformity with the equal employment opportunity requirements of Executive Order 11246, as amended, and 29 CFR part 30.

(5) **Compliance with Copeland Act requirements** - The contractor shall comply with the requirements of 29 CFR part 3, which are incorporated by reference in this contract.

(6) **Subcontracts** - The contractor or subcontractor shall insert in any subcontracts the clauses contained in 29 CFR 5.5(a)(1) through (10) and such other clauses as the Federal Transit Administration may by appropriate instructions require, and also a clause requiring the subcontractors to include these clauses in any lower tier subcontracts. The prime contractor shall be responsible for the compliance by any subcontractor or lower tier subcontractor with all the contract clauses in 29 CFR 5.5.

(7) **Contract termination: debarment** - A breach of the contract clauses in 29 CFR 5.5 may be grounds for termination of the contract, and for debarment as a contractor and a subcontractor as provided in 29 CFR 5.12.

(8) **Compliance with Davis-Bacon and Related Act requirements** - All rulings and interpretations of the Davis-Bacon and Related Acts contained in 29 CFR parts 1, 3, and 5 are herein incorporated by reference in this contract.

(9) **Disputes concerning labor standards** - Disputes arising out of the labor standards provisions of this contract shall not be subject to the general disputes clause of this contract. Such disputes shall be resolved in accordance with the procedures of the Department of Labor set forth in 29 CFR parts 5, 6, and 7. Disputes within the meaning of this clause include disputes between the contractor (or any of its subcontractors) and the contracting agency, the U.S. Department of Labor, or the employees or their representatives.

(10) **Certification of eligibility** - (i) By entering into this contract, the contractor certifies that neither it (nor he or she) nor any person or firm who has an interest in the contractor's firm is a person or firm ineligible to be awarded Government contracts by virtue of section 3(a) of the Davis-Bacon Act or 29 CFR 5.12(a)(1).

(ii) No part of this contract shall be subcontracted to any person or firm ineligible for award of a Government contract by virtue of section 3(a) of the Davis-Bacon Act or 29 CFR 5.12(a)(1).

(iii) The penalty for making false statements is prescribed in the U.S. Criminal Code, 18 U.S.C. 1001.

---

15. CONTRACT WORK HOURS AND SAFETY STANDARDS ACT

Background and Application

The Contract Work Hours and Safety Standards Act is codified at 40 USC 3701, *et seq.* The Act applies to grantee contracts and subcontracts "financed at least in part by loans or grants from … the

[Federal] Government." 40 USC 3701(b)(1)(B)(iii) and (b)(2), 29 CFR 5.2(h), 49 CFR 18.36(i)(6). Although the original Act required its application in any construction contract over $2,000 or non-construction contract to which the Act applied over $2,500 (and language to that effect is still found in 49 CFR 18.36(i)(6)), the Act no longer applies to any "contract in an amount that is not greater than $100,000." 40 USC 3701(b)(3) (A)(iii).

The Act applies to construction contracts and, in very limited circumstances, non-construction projects that employ "laborers or mechanics on a public work." These non-construction applications do not generally apply to transit procurements because transit procurements (to include rail cars and buses) are deemed "commercial items." 40 USC 3707, 41 USC 403 (12). A grantee that contemplates entering into a contract to procure a developmental or unique item should consult counsel to determine if the Act applies to that procurement and that additional language required by 29 CFR 5.5(c) must be added to the basic clause below.

Contract Work Hours and Safety Standards

(1) **Overtime requirements** - No contractor or subcontractor contracting for any part of the contract work which may require or involve the employment of laborers or mechanics shall require or permit any such laborer or mechanic in any workweek in which he or she is employed on such work to work in excess of forty hours in such workweek unless such laborer or mechanic receives compensation at a rate not less than one and one-half times the basic rate of pay for all hours worked in excess of forty hours in such workweek.

(2) **Violation; liability for unpaid wages; liquidated damages** - In the event of any violation of the clause set forth in paragraph (1) of this section the contractor and any subcontractor responsible therefor shall be liable for the unpaid wages. In addition, such contractor and subcontractor shall be liable to the United States for liquidated damages. Such liquidated damages shall be computed with respect to each individual laborer or mechanic, including watchmen and guards, employed in violation of the clause set forth in paragraph (1) of this section, in the sum of $10 for each calendar day on which such individual was required or permitted to work in excess of the standard workweek of forty hours without payment of the overtime wages required by the clause set forth in paragraph (1) of this section.

(3) **Withholding for unpaid wages and liquidated damages** - The (***write in the name of the grantee***) shall upon its own action or upon written request of an authorized representative of the Department of Labor withhold or cause to be withheld, from any moneys payable on account of work performed by the contractor or subcontractor under any such contract or any other Federal contract with the same prime contractor, or any other federally-assisted contract subject to the Contract Work Hours and Safety Standards Act, which is held by the same prime contractor, such sums as may be determined to be necessary to satisfy any liabilities of such contractor or subcontractor for unpaid wages and liquidated damages as provided in the clause set forth in paragraph (2) of this section.

(4) **Subcontracts** - The contractor or subcontractor shall insert in any subcontracts the clauses set forth in paragraphs (1) through (4) of this section and also a clause requiring the subcontractors to include these clauses in any lower tier subcontracts. The prime contractor shall be responsible for compliance by any subcontractor or lower tier subcontractor with the clauses set forth in paragraphs (1) through (4) of this section

16. NO GOVERNMENT OBLIGATION TO THIRD PARTIES

Applicability to Contracts
Applicable to all contracts.

Flow Down
Not required by statute or regulation for either primary contractors or subcontractors, this concept should flow down to all levels to clarify, to all parties to the contract, that the Federal Government does not have contractual liability to third parties, absent specific written consent.

No Obligation by the Federal Government.

(1) The Purchaser and Contractor acknowledge and agree that, notwithstanding any concurrence by the Federal Government in or approval of the solicitation or award of the underlying contract, absent the express written consent by the Federal Government, the Federal Government is not a party to this contract and shall not be subject to any obligations or liabilities to the Purchaser, Contractor, or any other party (whether or not a party to that contract) pertaining to any matter resulting from the underlying contract.

(2) The Contractor agrees to include the above clause in each subcontract financed in whole or in part with Federal assistance provided by FTA. It is further agreed that the clause shall not be modified, except to identify the subcontractor who will be subject to its provisions.

---

17. PROGRAM FRAUD AND FALSE OR FRAUDULENT STATEMENTS AND RELATED ACTS

31 U.S.C. 3801 et seq.
49 CFR Part 31 18 U.S.C. 1001
49 U.S.C. 5307

Applicability to Contracts
These requirements are applicable to all contracts.

Flow Down
These requirements flow down to contractors and subcontractors who make, present, or submit covered claims and statements.

Program Fraud and False or Fraudulent Statements or Related Acts.

(1) The Contractor acknowledges that the provisions of the Program Fraud Civil Remedies Act of 1986, as amended, 31 U.S.C. § 3801 et seq. and U.S. DOT regulations, "Program Fraud Civil Remedies," 49 C.F.R. Part 31, apply to its actions pertaining to this Project. Upon execution of the underlying contract, the Contractor certifies or affirms the truthfulness and accuracy of any statement it has made, it makes, it may make, or causes to be made, pertaining to the underlying contract or the FTA assisted project for which this contract work is being performed. In addition to other penalties that may be applicable, the Contractor further acknowledges that if it makes, or causes to be made, a false, fictitious, or fraudulent claim, statement, submission, or certification, the Federal Government reserves the right to impose the penalties of the Program Fraud Civil
Remedies Act of 1986 on the Contractor to the extent the Federal Government deems appropriate.

(2) The Contractor also acknowledges that if it makes, or causes to be made, a false, fictitious, or fraudulent claim, statement, submission, or certification to the Federal Government under a contract connected with a project that is financed in whole or in part with Federal assistance originally awarded by FTA under the authority of 49 U.S.C. § 5307, the Government reserves the right to impose the penalties of 18 U.S.C. § 1001 and 49 U.S.C. § 5307(n)(1) on the Contractor, to the extent the Federal Government deems appropriate.

(3) The Contractor agrees to include the above two clauses in each subcontract financed in whole or in part with Federal assistance provided by FTA. It is further agreed that the clauses shall not be modified, except to identify the subcontractor who will be subject to the provisions.

---

18. TERMINATION

Refer to the Standard Specifications for Roads, Bridges and Incidental Construction FORM 816 Section 1.05.14

---

19. GOVERNMENT-WIDE DEBARMENT AND SUSPENSION (NONPROCUREMENT)

Background and Applicability

In conjunction with the Office of Management and Budget and other affected Federal agencies, DOT published an update to 49 CFR Part 29 on November 26, 2003. This government-wide regulation implements Executive Order 12549, *Debarment and Suspension*, Executive Order 12689, *Debarment and Suspension*, and 31 U.S.C. 6101 note (Section 2455, Public Law 103-355, 108 Stat. 3327).

The provisions of Part 29 apply to all grantee contracts and subcontracts at any level expected to equal or exceed $25,000 as well as any contract or subcontract (at any level) for Federally required auditing services. 49 CFR 29.220(b). This represents a change from prior practice in that the dollar threshold for application of these rules has been lowered from $100,000 to $25,000. These are contracts and subcontracts referred to in the regulation as "covered transactions."

Grantees, contractors, and subcontractors (at any level) that enter into covered transactions are required to verify that the entity (as well as its principals and affiliates) they propose to contract or subcontract with is not excluded or disqualified. They do this by (a) Checking the Excluded Parties List System, (b) Collecting a certification from that person, or (c) Adding a clause or condition to the contract or subcontract. This represents a change from prior practice in that certification is still acceptable but is no longer required. 49 CFR 29.300.

Grantees, contractors, and subcontractors who enter into covered transactions also must require the entities they contract with to comply with 49 CFR 29, subpart C and include this requirement in their own subsequent covered transactions (i.e., the requirement flows down to subcontracts at all levels).

Suspension and Debarment

This contract is a covered transaction for purposes of 49 CFR Part 29. As such, the contractor is required to verify that none of the contractor, its principals, as defined at 49 CFR 29.995, or affiliates, as defined at 49 CFR 29.905, are excluded or disqualified as defined at 49 CFR 29.940 and 29.945.

The contractor is required to comply with 49 CFR 29, Subpart C and must include the requirement to comply with 49 CFR 29, Subpart C in any lower tier covered transaction it enters into.
By signing and submitting its bid or proposal, the bidder or proposer certifies as follows:

The certification in this clause is a material representation of fact relied upon by Connecticut Department of Transportation. If it is later determined that the bidder or proposer knowingly rendered an erroneous certification, in addition to remedies available to Connecticut Department of Transportation., the Federal Government may pursue available remedies, including but not limited to suspension and/or debarment. The bidder or proposer agrees to comply with the requirements of 49 CFR 29, Subpart C while this offer is valid and throughout the period of any contract that may arise from this offer. The bidder or proposer further agrees to include a provision requiring such compliance in its lower tier covered transactions.

---

20. CIVIL RIGHTS REQUIREMENTS

29 U.S.C. § 623, 42 U.S.C. § 2000
42 U.S.C. § 6102, 42 U.S.C. § 12112
42 U.S.C. § 12132, 49 U.S.C. § 5332
29 CFR Part 1630, 41 CFR Parts 60 et seq.

Applicability to Contracts
The Civil Rights Requirements apply to all contracts.

Flow Down
The Civil Rights requirements flow down to all third party contractors and their contracts at every tier.
Model Clause/Language
The following clause was predicated on language contained at 49 CFR Part 19, Appendix A, but FTA has shortened the lengthy text.

Civil Rights - The following requirements apply to the underlying contract:

(1) Nondiscrimination - In accordance with Title VI of the Civil Rights Act, as amended, 42 U.S.C. § 2000d, section 303 of the Age Discrimination Act of 1975, as amended, 42 U.S.C. § 6102, section 202 of the Americans with Disabilities Act of 1990, 42 U.S.C. § 12132, and Federal transit law at 49 U.S.C. § 5332, the Contractor agrees that it will not discriminate against any employee or applicant for employment because of race, color, creed, national origin, sex, age, or disability. In addition, the Contractor agrees to comply with applicable Federal implementing regulations and other implementing requirements FTA may issue.

(2) Equal Employment Opportunity - The following equal employment opportunity requirements apply to the underlying contract:
(a) Race, Color, Creed, National Origin, Sex - In accordance with Title VII of the Civil Rights Act, as amended, 42 U.S.C. § 2000e, and Federal transit laws at 49 U.S.C. § 5332, the Contractor agrees to comply with all applicable equal employment opportunity requirements of U.S. Department of Labor (U.S. DOL) regulations, "Office of Federal Contract Compliance Programs, Equal Employment Opportunity, Department of Labor," 41 C.F.R. Parts 60 et seq., (which implement Executive Order No. 11246, "Equal Employment Opportunity," as amended by Executive Order No. 11375, "Amending Executive Order 11246 Relating to Equal Employment Opportunity," 42 U.S.C. § 2000e note), and with any applicable Federal statutes, executive orders, regulations, and Federal policies that may in the future affect construction activities undertaken in the course of the Project. The Contractor agrees to

take affirmative action to ensure that applicants are employed, and that employees are treated during employment, without regard to their race, color, creed, national origin, sex, or age. Such action shall include, but not be limited to, the following: employment, upgrading, demotion or transfer, recruitment or recruitment advertising, layoff or termination; rates of pay or other forms of compensation; and selection for training, including apprenticeship. In addition, the Contractor agrees to comply with any implementing requirements FTA may issue.

(b) Age - In accordance with section 4 of the Age Discrimination in Employment Act of 1967, as amended, 29 U.S.C. § § 623 and Federal transit law at 49 U.S.C. § 5332, the Contractor agrees to refrain from discrimination against present and prospective employees for reason of age. In addition, the Contractor agrees to comply with any implementing requirements FTA may issue.

(c) Disabilities - In accordance with section 102 of the Americans with Disabilities Act, as amended, 42 U.S.C. § 12112, the Contractor agrees that it will comply with the requirements of U.S. Equal Employment Opportunity Commission, "Regulations to Implement the Equal Employment Provisions of the Americans with Disabilities Act," 29 C.F.R. Part 1630, pertaining to employment of persons with disabilities. In addition, the Contractor agrees to comply with any implementing requirements FTA may issue.

(3) The Contractor also agrees to include these requirements in each subcontract financed in whole or in part with Federal assistance provided by FTA, modified only if necessary to identify the affected parties.

---

21. BREACHES AND DISPUTE RESOLUTION

Refer to the Standard Specifications for Roads, Bridges and Incidental Construction, FORM 816, Sections 1.05.01 and 1.08.01 and Connecticut General Statue 4-61(as amended)

---

22. TRANSIT EMPLOYEE PROTECTIVE AGREEMENTS
49 U.S.C. § 5310, § 5311, and § 5333
29 CFR Part 215

Applicability to Contracts

The Transit Employee Protective Provisions apply to each contract for transit operations performed by employees of a Contractor recognized by FTA to be a transit operator. (Because transit operations involve many activities apart from directly driving or operating transit vehicles, FTA determines which activities constitute transit "operations" for purposes of this clause.)

Flow Down

These provisions are applicable to all contracts and subcontracts at every tier.

Transit Employee Protective Provisions. (1) The Contractor agrees to the comply with applicable transit employee protective requirements as follows:

(a) General Transit Employee Protective Requirements - To the extent that FTA determines that transit operations are involved, the Contractor agrees to carry out the transit operations work on the underlying contract in compliance with terms and conditions determined by the U.S. Secretary of Labor to be fair and equitable to protect the interests of employees employed under this contract and to meet the employee protective requirements of 49 U.S.C. A 5333(b), and U.S. DOL guidelines at 29

C.F.R. Part 215, and any amendments thereto. These terms and conditions are identified in the letter of certification from the U.S. DOL to FTA applicable to the FTA Recipient's project from which Federal assistance is provided to support work on the underlying contract. The Contractor agrees to carry out that work in compliance with the conditions stated in that U.S. DOL letter. The requirements of this subsection (1), however, do not apply to any contract financed with Federal assistance provided by FTA either for projects for elderly individuals and individuals with disabilities authorized by 49 U.S.C. § 5310(a)(2), or for projects for nonurbanized areas authorized by 49 U.S.C. § 5311. Alternate provisions for those projects are set forth in subsections (b) and (c) of this clause.

(b) Transit Employee Protective Requirements for Projects Authorized by 49 U.S.C. § 5310(a)(2) for Elderly Individuals and Individuals with Disabilities - If the contract involves transit operations financed in whole or in part with Federal assistance authorized by 49 U.S.C. § 5310(a)(2), and if the U.S. Secretary of Transportation has determined or determines in the future that the employee protective requirements of 49 U.S.C. § 5333(b) are necessary or appropriate for the state and the public body subrecipient for which work is performed on the underlying contract, the Contractor agrees to carry out the Project in compliance with the terms and conditions determined by the U.S. Secretary of Labor to meet the requirements of 49 U.S.C. § 5333(b), U.S. DOL guidelines at 29 C.F.R. Part 215, and any amendments thereto. These terms and conditions are identified in the U.S. DOL's letter of certification to FTA, the date of which is set forth Grant Agreement or Cooperative Agreement with the state. The Contractor agrees to perform transit operations in connection with the underlying contract in compliance with the conditions stated in that U.S. DOL letter.

(c) Transit Employee Protective Requirements for Projects Authorized by 49 U.S.C. § 5311 in Nonurbanized Areas - If the contract involves transit operations financed in whole or in part with Federal assistance authorized by 49 U.S.C. § 5311, the Contractor agrees to comply with the terms and conditions of the Special Warranty for the Nonurbanized Area Program agreed to by the U.S. Secretaries of Transportation and Labor, dated May 31, 1979, and the procedures implemented by U.S. DOL or any revision thereto.

(2) The Contractor also agrees to include the any applicable requirements in each subcontract involving transit operations financed in whole or in part with Federal assistance provided by FTA.

---

23. DISADVANTAGED BUSINESS ENTERPRISE (DBE)

Refer to the Special Provision section titled D.B.E. Subcontractors and Material Suppliers or Manufacturers

---

24. INCORPORATION OF FEDERAL TRANSIT ADMINISTRATION (FTA) TERMS
FTA Circular 4220.1F

Applicability to Contracts
The incorporation of FTA terms applies to all contracts.

Flow Down
The incorporation of FTA terms has unlimited flow down.

Incorporation of Federal Transit Administration (FTA) Terms - The preceding provisions include, in part, certain Standard Terms and Conditions required by DOT, whether or not expressly set forth in

the preceding contract provisions. All contractual provisions required by DOT, as set forth in FTA Circular 4220.1F, are hereby incorporated by reference. Anything to the contrary herein notwithstanding, all FTA mandated terms shall be deemed to control in the event of a conflict with other provisions contained in this Agreement. The Contractor shall not perform any act, fail to perform any act, or refuse to comply with any (name of grantee) requests which would cause (name of grantee) to be in violation of the FTA terms and conditions.

---

25. ACCESS FOR INDIVIDUALS WITH DISABILITY

The Contactor agrees to comply with 49 U.S.C. § 5301(d), which states the Federal policy that elderly individuals and individuals with disabilities have the same right as other individuals to use public transportation services and facilities, and that special efforts shall be made in planning and designing those services and facilities to implement transportation accessibility rights for elderly individuals and individuals with disabilities. The Contractor also agrees to comply with all applicable provisions of section 504 of the Rehabilitation Act of 1973, as amended, 29 U.S.C. § 794, which prohibits discrimination on the basis of disability in the administration of programs or activities receiving.

---

26. NATIONAL INTELLIGENT TRANSPORTATION SYSTEMS ARCHITECURE AND STANDARDS

To the extent applicable, the Contractor agrees to conform to the National Intelligent Transportation Systems (ITS) Architecture and Standards as required by SAFETEA-LU § 5307(c), 23 U.S.C. § 512 note, and follow the provisions of FTA Notice, "FTA National ITS Architecture Policy on Transit Projects," 66 *Fed. Reg.* 1455 *et seq*., January 8, 2001, and any other implementing directives FTA may issue at a later date, except to the extent FTA determines otherwise in writing.

---

27. ASSIGNABILITY CLAUSE

The State agrees to comply with applicable third party procurement requirements of 49 U.S.C. chapter 53, and ensure that for piggybacking purchases made with FTA-assistance, that contract utilized contains assignability clause that authorizes such piggybacking purchases.

Exhibit A of FTA Requirements

Certification requirement for procurement of steel, iron, or manufactured products.

Certificate of Compliance with 49 U.S.C. 5323(j)(1)

The bidder or offeror hereby certifies that it will meet the requirements of 49 U.S.C. 5323(j)(1) and the applicable regulations in 49 C.F.R. Part 661.5.

Date _____

Signature _____

Company Name _____

Title _____

Certificate of Non-Compliance with 49 U.S.C. 5323(j)(1)

The bidder or offeror hereby certifies that it cannot comply with the requirements of 49 U.S.C. 5323(j)(1) and 49 C.F.R. 661.5, but it may qualify for an exception pursuant to 49 U.S.C. 5323(j)(2)(A), 5323(j)(2)(B), or 5323(j)(2)(D), and 49 C.F.R. 661.7.

Date _____

Signature _____

Company Name _____

Title _____

Exhibit B of FTA Requirements

(To be submitted with each bid or offer exceeding $100,000)

The undersigned [Contractor] certifies, to the best of his or her knowledge and belief, that:

(1) No Federal appropriated funds have been paid or will be paid, by or on behalf of the undersigned, to any person for influencing or attempting to influence an officer or employee of an agency, a Member of Congress, an officer or employee of Congress, or an employee of a Member of Congress in connection with the awarding of any Federal contract, the making of any Federal grant, the making of any Federal loan, the entering into of any cooperative agreement, and the extension, continuation, renewal, amendment, or modification of any Federal contract, grant, loan, or cooperative agreement.

(2) If any funds other than Federal appropriated funds have been paid or will be paid to any person for making lobbying contacts to an officer or employee of any agency, a Member of Congress, an officer or employee of Congress, or an employee of a Member of Congress in connection with this Federal contract, grant, loan, or cooperative agreement, the undersigned shall complete and submit Standard Form--LLL, "Disclosure Form to Report Lobbying," in accordance with its instructions [as amended by "Government wide Guidance for New Restrictions on Lobbying," 61 Fed. Reg. 1413 (1/19/96). Note: Language in paragraph (2) herein has been modified in accordance with Section 10 of the Lobbying Disclosure Act of 1995 (P.L. 104-65, to be codified at 2 U.S.C. 1601, *et seq.*)]

(3) The undersigned shall require that the language of this certification be included in the award documents for all subawards at all tiers (including subcontracts, subgrants, and contracts under grants, loans, and cooperative agreements) and that all subrecipients shall certify and disclose accordingly.

This certification is a material representation of fact upon which reliance was placed when this transaction was made or entered into. Submission of this certification is a prerequisite for making or entering into this transaction imposed by 31, U.S.C. § 1352 (as amended by the Lobbying Disclosure Act of 1995). Any person who fails to file the required certification shall be subject to a civil penalty of not less than $10,000 and not more than $100,000 for each such failure.

[Note: Pursuant to 31 U.S.C. § 1352(c)(1)-(2)(A), any person who makes a prohibited expenditure or fails to file or amend a required certification or disclosure form shall be subject to a civil penalty of not less than $10,000 and not more than $100,000 for each such expenditure or failure.]

The Contractor, _____, certifies or affirms the truthfulness and accuracy of each statement of its certification and disclosure, if any. In addition, the Contractor understands and agrees that the provisions of 31 U.S.C. A 3801, *et seq.*, apply to this certification and disclosure, if any.

_____ Signature of Contractor's Authorized Official

_____ Name and Title of Contractor's Authorized Official

_____ Date

EXHIBIT B

TITLE VI CONTRACTOR ASSURANCES

During the performance of this Contract, the contractor, for itself, its assignees and successors in interest (hereinafter referred to as the "Contractor") agrees as follows:

1. **Compliance with Regulations:** The Contractor shall comply with the regulations relative to nondiscrimination in federally assisted programs of the United States Department of Transportation (hereinafter, "USDOT"), Title 49, Code of Federal Regulations, Part 21, as they may be amended from time to time (hereinafter referred to as the "Regulations"), which are herein incorporated by reference and made a part of this contract.

2. **Nondiscrimination:** The Contractor, with regard to the work performed by it during the Contract, shall not discriminate on the grounds of race, color, national origin, sex, age, or disability in the selection and retention of subcontractors, including procurements of materials and leases of equipment. The Contractor shall not participate either directly or indirectly in the discrimination prohibited by Subsection 5 of the Regulations, including employment practices when the Contract covers a program set forth in Appendix B of the Regulations.

3. **Solicitations for Subcontracts, Including Procurements of Materials and Equipment:**
In all solicitations either by competitive bidding or negotiation made by the Contractor for work to be performed under a subcontract, including procurements of materials or leases of equipment, each potential subcontractor or supplier shall be notified by the Contractor of the Contractor's obligations under this contract and the Regulations relative to nondiscrimination on the grounds of race, color, national origin, sex, age, or disability.

4. **Information and Reports:** The Contractor shall provide all information and reports required by the Regulations or directives issued pursuant thereto and shall permit access to its books, records, accounts, other sources of information, and its facilities as may be determined by the Connecticut Department of Transportation (ConnDOT) or the Funding Agency (FHWA, FTA and FAA) to be pertinent to ascertain compliance with such Regulations, orders, and instructions. Where any information required of a Contractor is in the exclusive possession of another who fails or refuses to furnish this information, the Contractor shall so certify to ConnDOT or the Funding Agency, as appropriate, and shall set forth what efforts it has made to obtain the information.

5. **Sanctions for Noncompliance:** In the event of the Contractor's noncompliance with the nondiscrimination provisions of this Contract, the ConnDOT shall impose such sanctions as it or the Funding Agency may determine to be appropriate, including, but not limited to:

A. Withholding contract payments until the Contractor is in-compliance; and/or
B. Cancellation, termination, or suspension of the Contract, in whole or in part.

6. **Incorporation of Provisions:** The Contractor shall include the provisions of paragraphs 1 through 5 in every subcontract, including procurements of materials and leases of equipment, unless exempt by the Regulations or directives issued pursuant thereto. The Contractor shall take such action with respect to any subcontract or procurement as the ConnDOT or the Funding Agency may -direct as a means of enforcing such provisions including sanctions for noncompliance. Provided, however, that in the event a Contractor becomes involved in, or is threatened with, litigation with a subcontractor or supplier as a result of such direction, the Contractor may request the ConnDOT to enter into such litigation to protect the interests of the Funding Agency, and, in addition, the Contractor may request the United States to enter into such litigation to protect the interests of the United States

EXHIBIT C

CONTRACTOR WORKFORCE UTILIZATION (FEDERAL EXECUTIVE ORDER 11246) / EQUAL EMPLOYMENT OPPORTUNITY

1. **Project Workforce Utilization Goals:**
   These goals are applicable to all the Contractor's construction work (whether or not it is Federal or Federally assisted or funded) performed in the covered area. If the contractor performs construction work in a geographical area located outside of the covered area, it shall apply the goals established for the geographical area where the work is actually performed.

   Whenever the Contractor, or any Subcontractor at any tier, subcontracts a portion of the work involving any construction trade, it shall physically include in each subcontract in excess of $10,000 the provisions of these specifications which contain the applicable goals for minority and female participation.

   The goals for minority and female utilization are expressed in percentage terms for the contractor's aggregate work-force in each trade on all construction work in the covered area, are referenced in the attached Appendix A.

2. **Executive Order 11246**
   The Contractor's compliance with Executive Order 11246 and 41-CFR Part 60-4 shall be based on its implementation of the specific affirmative action obligations required by the specifications set forth in 41 CFR 60-4.3(A) and its efforts to meet the goals established for the geographical area where the contract is to be performed. The hours of minority and female employment and training must be substantially uniform throughout the length of the contract, and in each trade, and the contractor shall make a good faith effort to employ minorities and women evenly on each of its projects. The transfer of minority or female employees or trainees from contractor to contractor or from project to project for the sole purpose of meeting the contractor's goals shall be a violation of the contract, the Executive Order and the regulations in 41 CFR Part 60-4. Compliance with the goals will be measured against the total work hour performed.

   If the Contractor is participating (pursuant to 41 CFR 60-4.5) in a Hometown Plan approved by the U.S. Department of Labor in the covered area either individually or through an association, its affirmative action obligations on all work in the Plan area (including goals and timetables) shall be in accordance with that Plan for those trades which have unions participating in the Plan. Contractors must be able to demonstrate their participation in and compliance with the provisions of any such Hometown Plan. Each Contractor or Subcontractor participating in an approved Plan is individually required to comply with its obligations under the EEO clause, and to make a good faith effort to achieve each goal under the Plan in each trade in which it has employees. The overall good faith performance by other Contractors or subcontractors toward a goal in an approved Pan does not excuse any covered Contractor's of subcontractor's failure to take good faith efforts to achieve the plan goals and timetables.

   The Contractor shall implement the specific affirmative action standards provided in a through p of these specifications. The goals set forth in the solicitation from which this contract resulted are expressed as percentages of the total hours of employment and training of minority and female utilization the Contractor should reasonably be able to achieve in each construction trade in which it has employees in the covered area. Covered Construction contractors performing

construction work in geographical areas where they do not have a federal or federally assisted construction contract shall apply the minority and female goals established for the geographical area where the work is being performed. Goals are published periodically in the Federal Register in notice form and such notices may be obtained from any Office of Federal Contract Compliance Programs (OFCCP) Office or from Federal procurement contracting officers. The Contractor is expected to make substantially uniform progress in meeting its goals in each craft during the period specified.

Neither the provisions of any collective bargaining agreement, nor the failure by a union with whom the Contractor has a collective bargaining agreement, to refer either minorities or women shall excuse the Contractors obligations under these specifications, Executive Order 11246, or the regulations promulgated pursuant hereto.

In order for the nonworking training hours of apprentices and trainees to be counted in meeting the goals, such apprentices and trainees must be employed by the Contractor during the training period, and the Contractor must have made a commitment to employ the apprentices and trainees at the completion of their training, subject to the availability of employment opportunities. Trainees must be trained pursuant to training programs approved by the U.S. Department of Labor.

The Contractor shall take specific affirmative actions to ensure equal employment opportunity. The evaluation of the Contractor's compliance with these specifications shall be based upon its effort to achieve maximum results from its actions. The Contractor shall document these efforts fully, and shall implement affirmative action steps at least as extensive as the following:

a. Ensure and maintain a working environment free of harassment, intimidation, and coercion at all sites; and in all facilities at which the Contractor's employees are assigned to work. The Contractor, where possible, will assign two or more women to each construction project. The Contractor shall specifically ensure that all foremen, superintendents, and other on-site supervisory personnel are aware of and carry out the Contractor's obligation to maintain such a working environment, with specific attention to minority or female individuals working at such sites or in such facilities.

b. Establish and maintain a current list of minority and female recruitment sources, provide written notification to minority and female recruitment sources and to community organizations when the Contractor or its unions have employment opportunities available, and maintain a record of the organizations' responses.

c. Maintain a current file of the names, addresses and telephone numbers of each minority and female off the street applicant and minority or female referral from a union, a recruitment source or community organization and of what action was taken with respect to each such individual. If such individual was sent to the union hiring hall for referral and was not referred back to the Contractor by the union or, if referred, not employed by the Contractor, this shall be documented in the file with the reason thereafter; along with whatever additional actions the Contractor may have taken.

d. Provide immediate written notification to the Director when the Union or Unions with which the Contractor has a collective bargaining agreement has not referred to the Contractor a minority person or women sent by the Contractor, or when the Contractor has other information that the Union referral process has impeded the Contractor's efforts to meet its obligations.

e. Develop on-the-job training opportunities and/or participate in training programs for the area which expressly include minorities and women, including upgrading programs and apprenticeship and trainee programs relevant to the Contractor's employment needs, especially those programs funded or approved by the Department of Labor. The Contractor shall provide notice of these programs to the sources compiled under b above.

f. Disseminate the Contractor's EEO policy by providing notice of the policy to unions and training programs and requesting their cooperation in assisting the Contractor in meeting its EEO obligations; by including it in any policy manual and collective bargaining agreement; by publicizing it in the company newspaper, annual report, etc.; by specific review of the policy with all management personnel and with all minority and female employees at least once a year; and by posting the company EEO Policy on bulletin boards accessible to all employees at each location where construction work is performed.

g. Review, at least annually, the company EEO Policy and affirmative action obligations under these specifications with all employees having any responsibility for hiring, assignment, layoff, termination or other employment, decisions including specific Foreman, etc. prior to the initiation of construction work at any job site. A written record shall be made and maintained identifying the time and place of these meetings, persons attending, subject matter discussed, and disposition of the subject matter.

h. Disseminate the Contractor's EEO Policy externally by including it in any advertising in the news media, specifically including minority and female news media, and providing written notification to and discussing the Contractor's EEO policy with other Contractors and subcontractors with whom the Contractor does or anticipates doing business.

i. Direct its recruitment efforts, both oral and written, to minority female and community organizations, to schools with minority and female students and to minority and female recruitment and training organizations serving the Contractor's recruitment area and employment needs. Not later than one month prior to the date for the acceptance of applications for apprenticeship or other training by any recruitment source, the contractor shall send written notification to organizations such as the above, describing the openings, screening procedures and tests to be used in the selection process.

j. Encourage present minority and female employees to recruit other minority persons and women and, where reasonable, provide after school, summer and vacation employment to minority and female youth both on the site and in other areas of a Contractor's work-force.

k. Validate all tests and other selection requirements where there is an obligation to do so under 41 CFR Part 60-3.

l. Conduct, at least annually, an inventory and evaluation at least of all minority and female personnel for promotional opportunities and encourage these employees to seek or to prepare for, through appropriate training, etc., such opportunities.

m. Ensure that seniority practices, job classifications, work assignments and other personnel practices, do not have a discriminatory effect by continually monitoring all personnel and employment related activities to ensure that the EEO policy and the Contractor's obligations under these specifications are being carried out.

n. Ensure that all facilities and company activities are non-segregated except that separate or single user toilet and necessary changing facilities shall be provided to assure privacy between the sexes.

o. Document and maintain a record of all solicitations of offers for subcontracts from minority and female construction contractors and suppliers, including circulation of solicitations to minority and female contractor associations and other business associations.

p. Conduct a review at least annually of all supervisors' adherence to and performance under the Contractor's EEO policies and affirmative action obligations.

Contractors are encouraged to participate in voluntary associations which assist in fulfilling one or more of their affirmative action obligations (a through p). The efforts of a contractor association, joint contractor union, contractor community, or other similar group of which the contractor is a member and participant, may be asserted as fulfilling any one or more of its obligations under a through p of these specifications provided that the contractor actively participates in the group, makes every effort to assure that the group has a positive impact on the employment of minorities and women in the industry, ensures that the concrete benefits of the program are reflected in the Contractor's minority and female work-force participation, makes a good faith effort to meet with individual goals and timetables, and can provide access to documentation which demonstrates the effectiveness of actions taken on behalf of the Contractor. The obligation to comply, however, is the Contractor's and failure of such a group to fulfill an obligation shall not be a defense for the Contractor's noncompliance.

A single goal for minorities and a separate single goal for women have been established. The Contractor, however, is required to provide equal employment opportunity and to take affirmative action for all minority groups, both male and female, and all women, both minority and non-minority. Consequently, the Contractor may be in violation of Executive Order 11246 if a particular group is employed in a substantially disparate manner, (for example, even though the Contractor has achieved its goals for women generally, the Contractor may be in violation of the Executive Order if a specific minority group of women is under utilized).

The Contractor shall not use the goals and timetables or affirmative action standards to discriminate against any person because of race, color, religion, sex, or national origin.

The Contractor shall not enter into any Subcontract with any person or firm debarred from Government contracts pursuant to Executive Order 11246.

The Contractor shall carry out such sanctions and penalties for violation of these specifications and of the Equal Opportunity Clause, including suspension, termination and cancellation of existing subcontracts as may be imposed or ordered pursuant to Executive Order 11246, as amended, and its implementing regulations by the Office of Federal Contract Compliance Programs. Any Contractor who fails to carry out such sanctions and penalties shall be in violation of these specifications and Executive Order 11246, as amended.

The Contractor, in fulfilling its obligations under these specifications, shall implement specific affirmative action steps, at least as extensive as those standards prescribed in these specifications, so as to achieve maximum results from its efforts to ensure equal employment opportunity. If the Contractor fails to comply with the requirements of the Executive Order, the

implementing regulations, or these specifications, the Director shall proceed in accordance with 41 CFR 60-4 8.

The Contractor shall designate a responsible official to monitor all employment related activity to ensure that the company EEO policy is being carried out, to submit reports relating to the provisions hereof as may be required by the Government and to keep records. Records shall at least include for each employee the name, address, telephone numbers, construction trade, union affiliation if any, employee identification number when assigned, social security number, race, sex, status, (e.g. mechanic, apprentice, trainee, helper, or laborer) dates of changes in status, hours worked per week in the indicated trade, rate of pay, and locations at which the work was performed. Records shall be maintained in an easily understandable and retrievable form; however, to the degree that existing records satisfy this requirement, contractors shall not be required to maintain separate records.

Nothing herein provided shall be construed as a limitation upon the application of their laws which establish different standards of compliance or upon the application of requirements for the hiring of local or other area residents (e.g. those under the Public Works Employment Act of 1977 and the Community Development Block Grant Program).

The Director of the Office of Federal Contract Compliance Programs, from time to time, shall issue goals and timetables for minority and female utilization which shall be based on appropriate work-force, demographic or other relevant data and which shall cover construction projects or construction contracts performed in specific geographical areas. The goals, which shall be applicable to each construction trade in a covered contractor's or timetables, shall be published as notices in the Federal Register, and shall be inserted by the Contracting officers and applicants, as applicable, in the Notice required by 41 CFR 60-4.2.

FEDERALLY FUNDED OR ASSISTED PROJECTS
APPENDIX A
(Labor Market Goals)

Standard Metropolitan Statistical Area (SMSA)

Female **Minority**

Bridgeport – Stamford – Norwalk – Danbury			**10.2%**
6.9%			
Bethel	Bridgeport	Brookfield	Danbury
Darien	Derby	Easton	Fairfield
Greenwich	Milford	Monroe	New Canaan
New Fairfield	Newton	Norwalk	Redding
Shelton	Stamford	Stratford	Trumbull
Weston	Westport	Wilton	

Hartford – Bristol – New Britain			**6.9%**
6.9%			
Andover	Avon	Berlin	Bloomfield
Bolton	Bristol	Burlington	Canton
Colchester	Columbia	Coventry	Cromwell
East Granby	East Hampton	East Hartford	East Windsor
Ellington	Enfield	Farmington	Glastonbury
Granby	Hartford	Hebron	Manchester
Marlborough	New Britain	New Hartford	Newington
Plainville	Plymouth	Portland	Rocky Hill
Simsbury	South Windsor	Southington	Stafford
Suffield	Tolland	Vernon	West Hartford
Wethersfield	Willington	Windsor	Windsor Locks

New Haven – Waterbury – Meriden			**9.0%**
6.9%			
Beacon Falls	Bethany	Branford	Cheshire
Clinton	East Haven	Guilford	Hamden
Madison	Meriden	Middlebury	Naugatuck
New Haven	North Branford	North Haven	Orange
Prospect	Southbury	Thomaston	Wallingford
Waterbury	Watertown	West Haven	Wolcott
Woodbridge	Woodbury		

New London – Norwich			**4.5%**
6.9%			
Bozrah	East Lyme	Griswold	Groton
Ledyard	Lisbon	Montville	New London
Norwich	Old Lyme	Old Saybrook	Preston
Sprague	Stonington	Waterford	

Non SMSA

Female				**Minority**
Litchfield – Windham 6.9%				**5.9%**
Abington	Ashford	Ballouville	Bantam	
Barkhamsted	Bethlehem	Bridgewater	Brooklyn	
Canaan	Canterbury	Central Village	Cahplin	
Colebrook	Cornwall	Cornwall Bridge	Danielson	
Dayville	East Canaan	East Killingly	East Woodstock	
Eastford	Falls Village	Gaylordsville	Goshen	
Grosvenor Dale	Hampton	Harwinton	Kent	
Killignly	Lakeside	Litchfield	Moosup	
Morris	New Milford	New Preston	New Preston Marble Dale	
Norfolk	North Canaan	No. Grosvenordale	North Windham	
Oneco	Pequabuck	Pine Meadow	Plainfield	
Pleasant Valley	Pomfret	Pomfret Center	Putnam	
Quinebaug	Riverton	Rogers	Roxbury	
Salisbury	Scotland	Sharon	South Kent	
South Woodstock	Sterling	Taconic	Terryville	
Thompson	Torrington	Warren	Warrenville	
Washington	Washington Depot	Wauregan	West Cornwall	
Willimantic	Winchester	Winchester Center	Windham	
Winsted	Woodstock	Woodstock Valley		

EXHIBIT D

Health Insurance Portability and Accountability Act of 1996 ("HIPAA").

(a) If the Contactor is a Business Associate under the requirements of the Health Insurance Portability and Accountability Act of 1996 ("HIPAA"), the Contractor must comply with all terms and conditions of this Section of the Contract. If the Contractor is not a Business Associate under HIPAA, this Section of the Contract does not apply to the Contractor for this Contract.

(b) The Contractor is required to safeguard the use, publication and disclosure of information on all applicants for, and all clients who receive, services under the Contract in accordance with all applicable federal and state law regarding confidentiality, which includes but is not limited to HIPAA, more specifically with the Privacy and Security Rules at 45 C.F.R. Part 160 and Part 164, subparts A, C, and E; and

(c) The State of Connecticut Agency named on page 1 of this Contract (hereinafter the "Department") is a "covered entity" as that term is defined in 45 C.F.R. § 160.103; and

(d) The Contractor, on behalf of the Department, performs functions that involve the use or disclosure of "individually identifiable health information," as that term is defined in 45 C.F.R. § 160.103; and

(e) The Contractor is a "business associate" of the Department, as that term is defined in 45 C.F.R. § 160.103; and

(f) The Contractor and the Department agree to the following in order to secure compliance with the HIPAA, the requirements of Subtitle D of the Health Information Technology for Economic and Clinical Health Act (hereinafter the HITECH Act), (Pub. L. 111-5, sections 13400 to 13423), and more specifically with the Privacy and Security Rules at 45 C.F.R. Part 160 and Part 164, subparts A, C, and E.

(g) Definitions

(1) "Breach shall have the same meaning as the term is defined in section 13400 of the HITECH Act (42 U.S.C. §17921(1))

(2) "Business Associate" shall mean the Contractor.

(3) "Covered Entity" shall mean the Department of the State of Connecticut named on page 1 of this Contract.

(4) "Designated Record Set" shall have the same meaning as the term "designated record set" in 45 C.F.R. § 164.501.

(5) "Electronic Health Record" shall have the same meaning as the term is defined in section 13400 of the HITECH Act (42 U.S.C. §17921(5))

(6) "Individual" shall have the same meaning as the term "individual"' in 45 C.F.R. § 160.103 and shall include a person who qualifies as a personal representative as defined in 45 C.F.R. § 164.502(g).

(7) "Privacy Rule" shall mean the Standards for Privacy of Individually Identifiable Health Information at 45 C.F.R. part 160 and parts 164, subparts A and E.

(8) "Protected Health Information" or "PHI" shall have the same meaning as the term "protected health information" in 45 C.F.R. § 160.103, limited to information created or received by the Business Associate from or on behalf of the Covered Entity.

(9) "Required by Law"' shall have the same meaning as the term "required by law" in 45 C.F.R. § 164.103.

(10) "Secretary" shall mean the Secretary of the Department of Health and Human Services or his designee.

(11) "More stringent" shall have the same meaning as the term "more stringent" in 45 C.F.R. § 160.202.

(12) "This Section of the Contract" refers to the HIPAA Provisions stated herein, in their entirety.

(13) "Security Incident" shall have the same meaning as the term "security incident" in 45 C.F.R.§ 164.304.

(14) "Security Rule" shall mean the Security Standards for the Protection of Electronic Protected Health Information at 45 C.F.R. part 160 and parts 164, subpart A and C.

(15) "Unsecured protected health information" shall have the same meaning as the term as defined in section 13402(h)(1)(A) of HITECH. Act. (42 U.S.C. §17932(h)(1)(A)).

(h) Obligations and Activities of Business Associates.

(1) Business Associate agrees not to use or disclose PHI other than as permitted or required by this Section of the Contract or as Required by Law.

(2) Business Associate agrees to use appropriate safeguards to prevent use or disclosure of PHI other than as provided for in this Section of the Contract.

(3) Business Associate agrees to use administrative, physical and technical safeguards that reasonably and appropriately protect the confidentiality, integrity, and availability of electronic protected health information that it creates, receives, maintains, or transmits on behalf of the Covered Entity.

(4) Business Associate agrees to mitigate, to the extent practicable, any harmful effect that is known to the Business Associate of a use or disclosure of PHI by Business Associate in violation of this Section of the Contract.

(5) Business Associate agrees to report to Covered Entity any use or disclosure of PHI not provided for by this Section of the Contract or any security incident of which it becomes aware.

(6) Business Associate agrees to insure that any agent, including a subcontractor, to whom it provides PHI received from, or created or received by Business Associate, on behalf of the Covered Entity, agrees to the same restrictions and conditions that apply through this Section of the Contract to Business Associate with respect to such information.

(7) Business Associate agrees to provide access, at the request of the Covered Entity, and in the time and manner agreed to by the parties, to PHI in a Designated Record Set, to Covered Entity or, as directed by Covered Entity, to an Individual in order to meet the requirements under 45 C.F.R. § 164.524.

(8) Business Associate agrees to make any amendments to PHI in a Designated Record Set that the Covered Entity directs or agrees to pursuant to 45 C.F.R. § 164.526 at the request of the Covered Entity, and in the time and manner agreed to by the parties.

(9) Business Associate agrees to make internal practices, books, and records, including policies and procedures and PHI, relating to the use and disclosure of PHI received from, or created or received by, Business Associate on behalf of Covered Entity, available to Covered Entity or to the Secretary in a time and manner agreed to by the parties or designated by the Secretary, for purposes of the Secretary determining Covered Entity's compliance with the Privacy Rule.

(10) Business Associate agrees to document such disclosures of PHI and information related to such disclosures as would be required for Covered Entity to respond to a request by an Individual for an accounting of disclosures of PHI in accordance with 45 C.F.R. § 164.528 and section 13405 of the HITECH Act (42 U.S.C. § 17935) and any regulations promulgated thereunder.

(11) Business Associate agrees to provide to Covered Entity, in a time and manner agreed to by the parties, information collected in accordance with clause h. (10) of this Section of the Contract, to permit Covered Entity to respond to a request by an Individual for an accounting of disclosures of PHI in accordance with 45 C.F.R. § 164.528 and section 13405 of the HITECH Act (42 U.S.C. § 17935) and any regulations promulgated thereunder. Business Associate agrees at the Covered Entity's direction to provide an accounting of disclosures of PHI directly to an individual in accordance with 45 C.F.R. § 164.528 and section 13405 of the HITECH Act (42 U.S.C. § 17935) and any regulations promulgated thereunder.

(12) Business Associate agrees to comply with any state or federal law that is more stringent than the Privacy Rule.

(13) Business Associate agrees to comply with the requirements of the HITECH Act relating to privacy and security that are applicable to the Covered Entity and with the requirements of 45 C.F.R. sections 164.504(e), 164.308, 164.310, 164.312, and 164.316.

(14) In the event that an individual requests that the Business Associate (a) restrict disclosures of PHI; (b) provide an accounting of disclosures of the individual's PHI; or (c) provide a copy of the individual's PHI in an electronic health record, the Business Associate agrees to notify the covered entity, in writing, within two business days of the request.

(15) Business Associate agrees that it shall not, directly or indirectly, receive any remuneration in exchange for PHI of an individual without (1) the written approval of the covered entity, unless receipt of remuneration in exchange for PHI is expressly authorized by this Contract and (2) the valid authorization of the individual, except for the purposes provided under section 13405(d)(2) of the HITECH Act,(42 U.S.C. § 17935(d)(2)) and in any accompanying regulations

(16) Obligations in the Event of a Breach

A. The Business Associate agrees that, following the discovery of a breach of unsecured protected health information, it shall notify the Covered Entity of such breach in accordance with the requirements of section 13402 of HITECH (42 U.S.C. 17932(b) and the provisions of this Section of the Contract.
B. Such notification shall be provided by the Business Associate to the Covered Entity without unreasonable delay, and in no case later than 30 days after the breach is discovered by the Business Associate, except as otherwise instructed in writing by a law enforcement official pursuant to section 13402 (g) of HITECH (42 U.S.C. 17932(g)) . A breach is considered discovered as of the first day on which it is, or reasonably should have been, known to the Business Associate. The notification shall include the identification and last known address, phone number and email address of each individual (or the next of kin of the individual if the individual is deceased) whose unsecured protected health information has been, or is reasonably believed by the Business Associate to have been, accessed, acquired, or disclosed during such breach.
C. The Business Associate agrees to include in the notification to the Covered Entity at least the following information:
    1. A brief description of what happened, including the date of the breach and the date of the discovery of the breach, if known.

    2. A description of the types of unsecured protected health information that were involved in the breach (such as full name, Social Security number, date of birth, home address, account number, or disability code).

    3. The steps the Business Associate recommends that individuals take to protect themselves from potential harm resulting from the breach.

    4. A detailed description of what the Business Associate is doing to investigate the breach, to mitigate losses, and to protect against any further breaches.

    5. Whether a law enforcement official has advised either verbally or in writing the Business Associate that he or she has determined that notification or notice to

individuals or the posting required under section 13402 of the HITECH Act would impede a criminal investigation or cause damage to national security and; if so, include contact information for said official.

D. Business Associate agrees to provide appropriate staffing and have established procedures to ensure that individuals informed by the Covered Entity of a breach by the Business Associate have the opportunity to ask questions and contact the Business Associate for additional information regarding the breach. Such procedures shall include a toll-free telephone number, an e-mail address, a posting on its Web site and a postal address. Business Associate agrees to include in the notification of a breach by the Business Associate to the Covered Entity, a written description of the procedures that have been established to meet these requirements. Costs of such contact procedures will be borne by the Contractor.

E. Business Associate agrees that, in the event of a breach, it has the burden to demonstrate that it has complied with all notifications requirements set forth above, including evidence demonstrating the necessity of a delay in notification to the Covered Entity.

(i) Permitted Uses and Disclosure by Business Associate.

(1) General Use and Disclosure Provisions Except as otherwise limited in this Section of the Contract, Business Associate may use or disclose PHI to perform functions, activities, or services for, or on behalf of, Covered Entity as specified in this Contract, provided that such use or disclosure would not violate the Privacy Rule if done by Covered Entity or the minimum necessary policies and procedures of the Covered Entity.

(2) Specific Use and Disclosure Provisions

(A) Except as otherwise limited in this Section of the Contract, Business Associate may use PHI for the proper management and administration of Business Associate or to carry out the legal responsibilities of Business Associate.

(B) Except as otherwise limited in this Section of the Contract, Business Associate may disclose PHI for the proper management and administration of Business Associate, provided that disclosures are Required by Law, or Business Associate obtains reasonable assurances from the person to whom the information is disclosed that it will remain confidential and used or further disclosed only as Required by Law or for the purpose for which it was disclosed to the person, and the person notifies Business Associate of any instances of which it is aware in which the confidentiality of the information has been breached.

(C) Except as otherwise limited in this Section of the Contract, Business Associate may use PHI to provide Data Aggregation services to Covered Entity as permitted by 45 C.F.R. § 164.504(e)(2)(i)(B).

(j) Obligations of Covered Entity.

(1) Covered Entity shall notify Business Associate of any limitations in its notice of privacy practices of Covered Entity, in accordance with 45 C.F.R. § 164.520, or to the extent that such limitation may affect Business Associate's use or disclosure of PHI.

(2) Covered Entity shall notify Business Associate of any changes in, or revocation of, permission by Individual to use or disclose PHI, to the extent that such changes may affect Business Associate's use or disclosure of PHI.

(3) Covered Entity shall notify Business Associate of any restriction to the use or disclosure of PHI that Covered Entity has agreed to in accordance with 45 C.F.R. § 164.522, to the extent that such restriction may affect Business Associate's use or disclosure of PHI.

(k) Permissible Requests by Covered Entity. Covered Entity shall not request Business Associate to use or disclose PHI in any manner that would not be permissible under the Privacy Rule if done by the Covered Entity, except that Business Associate may use and disclose PHI for data aggregation, and management and administrative activities of Business Associate, as permitted under this Section of the Contract.

(l) Term and Termination.

(1) Term. The Term of this Section of the Contract shall be effective as of the date the Contract is effective and shall terminate when the information collected in accordance with clause h. (10) of this Section of the Contract is provided to the Covered Entity and all of the PHI provided by Covered Entity to Business Associate, or created or received by Business Associate on behalf of Covered Entity, is destroyed or returned to Covered Entity, or, if it is infeasible to return or destroy PHI, protections are extended to such information, in accordance with the termination provisions in this Section.

(2) Termination for Cause Upon Covered Entity's knowledge of a material breach by Business Associate, Covered Entity shall either:

(A) Provide an opportunity for Business Associate to cure the breach or end the violation and terminate the Contract if Business Associate does not cure the breach or end the violation within the time specified by the Covered Entity; or

(B) Immediately terminate the Contract if Business Associate has breached a material term of this Section of the Contract and cure is not possible; or

(C) If neither termination nor cure is feasible, Covered Entity shall report the violation to the Secretary.

(3) Effect of Termination

(A) Except as provided in (l)(2) of this Section of the Contract, upon termination of this Contract, for any reason, Business Associate shall return or destroy all PHI received from Covered Entity, or created or received by Business Associate on behalf of Covered Entity. Business Associate shall also provide the information collected in accordance with clause h. (10) of this Section of the Contract to the Covered Entity

within ten business days of the notice of termination. This provision shall apply to PHI that is in the possession of subcontractors or agents of Business Associate. Business Associate shall retain no copies of the PHI.

(B) In the event that Business Associate determines that returning or destroying the PHI is infeasible, Business Associate shall provide to Covered Entity notification of the conditions that make return or destruction infeasible. Upon documentation by Business Associate that return or destruction of PHI is infeasible, Business Associate shall extend the protections of this Section of the Contract to such PHI and limit further uses and disclosures of PHI to those purposes that make return or destruction infeasible, for as long as Business Associate maintains such PHI. Infeasibility of the return or destruction of PHI includes, but is not limited to, requirements under state or federal law that the Business Associate maintains or preserves the PHI or copies thereof.

(m) Miscellaneous Provisions.

(1) Regulatory References. A reference in this Section of the Contract to a section in the Privacy Rule means the section as in effect or as amended.

(2) Amendment. The Parties agree to take such action as in necessary to amend this Section of the Contract from time to time as is necessary for Covered Entity to comply with requirements of the Privacy Rule and the Health Insurance Portability and Accountability Act of 1996, Pub. L. No. 104-191.

(3) Survival. The respective rights and obligations of Business Associate shall survive the termination of this Contract.

(4) Effect on Contract. Except as specifically required to implement the purposes of this Section of the Contract, all other terms of the Contract shall remain in force and effect.

(5) Construction. This Section of the Contract shall be construed as broadly as necessary to implement and comply with the Privacy Standard. Any ambiguity in this Section of the Contract shall be resolved in favor of a meaning that complies, and is consistent with, the Privacy Standard.

(6) Disclaimer. Covered Entity makes no warranty or representation that compliance with this Section of the Contract will be adequate or satisfactory for Business Associate's own purposes. Covered Entity shall not be liable to Business Associate for any claim, civil or criminal penalty, loss or damage related to or arising from the unauthorized use or disclosure of PHI by Business Associate or any of its officers, directors, employees, contractors or agents, or any third party to whom Business Associate has disclosed PHI contrary to the provisions of this Contract or applicable law. Business Associate is solely responsible for all decisions made, and actions taken, by Business Associate regarding the safeguarding, use and disclosure of PHI within its possession, custody or control.

(7) Indemnification. The Business Associate shall indemnify and hold the Covered Entity harmless from and against any and all claims, liabilities, judgments, fines, assessments, penalties, awards and any statutory damages that may be imposed or assessed pursuant to HIPAA, as amended or the

HITECH Act, including, without limitation, attorney's fees, expert witness fees, costs of investigation, litigation or dispute resolution, and costs awarded thereunder, relating to or arising out of any violation by the Business Associate and its agents, including subcontractors, of any obligation of Business Associate and its agents, including subcontractors, under this section of the contract, under HIPAA, the HITECH Act, the Privacy Rule and the Security Rule.

Notice to Executive Branch State Contractors and Prospective State Contractors of Campaign Contribution and Solicitation Limitations

This notice is provided under the authority of Connecticut General Statutes §9-612(g)(2), as amended by P.A. 10-1, and is for the purpose of informing state contractors and prospective state contractors of the following law (italicized words are defined on the reverse side of this page).

CAMPAIGN CONTRIBUTION AND SOLICITATION LIMITATIONS

No *state contractor, prospective state contractor, principal of a state contractor or principal of a prospective state contractor*, with regard to a *state contract* or *state contract solicitation* with or from a state agency in the executive branch or a quasi-public agency or a holder, or principal of a holder of a valid prequalification certificate, shall make a contribution to (i) an exploratory committee or candidate committee established by a candidate for nomination or election to the office of Governor, Lieutenant Governor, Attorney General, State Comptroller, Secretary of the State or State Treasurer, (ii) a political committee authorized to make contributions or expenditures to or for the benefit of such candidates, or (iii) a party committee (which includes town committees).

In addition, no holder or principal of a holder of a valid prequalification certificate, shall make a contribution to (i) an exploratory committee or candidate committee established by a candidate for nomination or election to the office of State senator or State representative, (ii) a political committee authorized to make contributions or expenditures to or for the benefit of such candidates, or (iii) a party committee.

On and after January 1, 2011, no state contractor, prospective state contractor, principal of a state contractor or principal of a prospective state contractor, with regard to a state contract or state contract solicitation with or from a state agency in the executive branch or a quasi-public agency or a holder, or principal of a holder of a valid prequalification certificate, shall **knowingly** *solicit* contributions from the state contractor's or prospective state contractor's employees or from a *subcontractor* or *principals of the subcontractor* on behalf of (i) an exploratory committee or candidate committee established by a candidate for nomination or election to the office of Governor, Lieutenant Governor, Attorney General, State Comptroller, Secretary of the State or State Treasurer, (ii) a political committee authorized to make contributions or expenditures to or for the benefit of such candidates, or (iii) a party committee.

DUTY TO INFORM

State contractors and prospective state contractors are required to inform their principals of the above prohibitions, as applicable, and the possible penalties and other consequences of any violation thereof.

PENALTIES FOR VIOLATIONS

Contributions or solicitations of contributions made in violation of the above prohibitions may result in the following civil and criminal penalties:

Civil penalties—Up to $2,000 or twice the amount of the prohibited contribution, whichever is greater, against a principal or a contractor. Any state contractor or prospective state contractor which fails to make reasonable efforts to comply with the provisions requiring notice to its principals of these prohibitions and the possible consequences of their violations may also be subject to civil penalties of up to $2,000 or twice the amount of the prohibited contributions made by their principals.

Criminal penalties—Any knowing and willful violation of the prohibition is a Class D felony, which may subject the violator to imprisonment of not more than 5 years, or not more than $5,000 in fines, or both.

CONTRACT CONSEQUENCES

In the case of a state contractor, contributions made or solicited in violation of the above prohibitions may resulting the contract being voided.

In the case of a prospective state contractor, contributions made or solicited in violation of the above prohibitions shall result in the contract described in the state contract solicitation not being awarded to the prospective state contractor, unless the State Elections Enforcement Commission determines that mitigating circumstances exist concerning such violation.

The State shall not award any other state contract to anyone found in violation of the above prohibitions for a period of one year after the election for which such contribution is made or solicited, unless the State Elections Enforcement Commission determines that mitigating circumstances exist concerning such violation.
Additional information may be found on the website of the State Elections Enforcement Commission, www.ct.gov/seec. Click on the link to “Lobbyist/Contractor Limitations.”

DEFINITIONS

"State contractor" means a person, business entity or nonprofit organization that enters into a state contract. Such person, business entity or nonprofit organization shall be deemed to be a state contractor until December thirty-first of the year in which such contract terminates. "State contractor" does not include a municipality or any other political subdivision of the state, including any entities or associations duly created by the municipality or political subdivision exclusively amongst themselves to further any purpose authorized by statute or charter, or an employee in the executive or legislative branch of state government or a quasi-public agency, whether in the classified or unclassified service and full or part-time, and only in such person's capacity as a state or quasi-public agency employee.

"Prospective state contractor" means a person, business entity or nonprofit organization that (i) submits a response to a state contract solicitation by the state, a state agency or a quasi-public agency, or a proposal in response to a request for proposals by the state, a state agency or a quasi-public agency, until the contract has been entered into, or (ii) holds a valid prequalification certificate issued by the Commissioner of Administrative Services under section 4a-100. "Prospective state contractor" does not include a municipality or any other political subdivision of the state, including any entities or associations duly created by the municipality or political subdivision exclusively amongst themselves to further any purpose authorized by statute or charter, or an employee in the executive or legislative branch of state government or a quasi-public agency, whether in the classified or unclassified service and full or part-time, and only in such person's capacity as a state or quasi-public agency employee.

"Principal of a state contractor or prospective state contractor" means (i) any individual who is a member of the board of directors of, or has an ownership interest of five per cent or more in, a state contractor or prospective state contractor, which is a business entity, except for an individual who is a member of the board of directors of a nonprofit organization**,** (ii) an individual who is employed by a state contractor or prospective state contractor, which is a business entity, as president, treasurer or executive vice president, (iii) an individual who is the chief executive officer of a state contractor or prospective state contractor, which is not a business entity, or if a state contractor or prospective state contractor has no such officer, then the officer who duly possesses comparable powers and duties, (iv) an officer or an employee of any state contractor or prospective state contractor who has *managerial or discretionary responsibilities with respect to a state contract,* (v) the spouse or a *dependent child* who is eighteen years of age or older of an individual described in this subparagraph, or (vi) a political committee established or controlled by an individual described in this subparagraph or the business entity or nonprofit organization that is the state contractor or prospective state contractor.

"State contract" means an agreement or contract with the state or any state agency or any quasi-public agency, let through a procurement process or otherwise, having a value of fifty thousand dollars or more, or a combination or series of such agreements or contracts having a value of one hundred thousand dollars or more in a calendar year, for (i) the rendition of services, (ii) the furnishing of any goods, material, supplies, equipment or any items of any kind, (iii) the construction, alteration or repair of any public building or public work, (iv) the acquisition, sale or lease of any land or building, (v) a licensing arrangement, or (vi) a grant, loan or loan guarantee. "State contract" does not include any agreement or contract with the state, any state agency or any quasi-public agency that is exclusively federally funded, an education loan, a loan to an individual for other than commercial purposes or any agreement or contract between the state or any state agency and the United States Department of the Navy or the United States Department of Defense.

"State contract solicitation" means a request by a state agency or quasi-public agency, in whatever form issued, including, but not limited to, an invitation to bid, request for proposals, request for information or request for quotes, inviting bids, quotes or other types of submittals, through a competitive procurement process or another process authorized by law waiving competitive procurement.

"Managerial or discretionary responsibilities with respect to a state contract" means having direct, extensive and substantive responsibilities with respect to the negotiation of the state contract and not peripheral, clerical or ministerial responsibilities.

"Dependent child" means a child residing in an individual's household who may legally be claimed as a dependent on the federal income tax of such individual.

"Solicit" means (A) requesting that a contribution be made, (B) participating in any fund-raising activities for a candidate committee, exploratory committee, political committee or party committee, including, but not limited to, forwarding tickets to potential contributors, receiving contributions for transmission to any such committee or bundling contributions, (C) serving as chairperson, treasurer or deputy treasurer of any such committee, or (D) establishing a political committee for the sole purpose of soliciting or receiving contributions for any committee. Solicit does not include: (i) making a contribution that is otherwise permitted by Chapter 155 of the Connecticut General Statutes; (ii) informing any person of a position taken by a candidate for public office or a public official, (iii) notifying the person of any activities of, or contact information for, any candidate for public office; or (iv) serving as a member in any party committee or as an officer of such committee that is not otherwise prohibited in this section.

"Subcontractor" means any person, business entity or nonprofit organization that contracts to perform part or all of the obligations of a state contractor's state contract. Such person, business entity or nonprofit organization shall be deemed to be a subcontractor until December thirty first of the year in which the subcontract terminates. "Subcontractor" does not include (i) a municipality or any other political subdivision of the state, including any entities or associations duly created by the municipality or political subdivision exclusively amongst themselves to further any purpose authorized by statute or charter, or (ii) an employee in the executive or legislative branch of state government or a quasi-public agency, whether in the classified or unclassified service and full or part-time, and only in such person's capacity as a state or quasi-public agency employee.

"Principal of a subcontractor" means (i) any individual who is a member of the board of directors of, or has an ownership interest of five per cent or more in, a subcontractor, which is a business entity, except for an individual who is a member of the board of directors of a nonprofit organization, (ii) an individual who is employed by a subcontractor, which is a business entity, as president, treasurer or executive vice president, (iii) an individual who is the chief executive officer of a subcontractor, which is not a business entity, or if a subcontractor has no such officer, then the officer who duly possesses comparable powers and duties, (iv) an officer or an employee of any subcontractor who has managerial or discretionary responsibilities with respect to a subcontract with a state contractor, (v) the spouse or a dependent child who is eighteen years of age or older of an individual described in this subparagraph, or (vi) a political committee established or controlled by an individual described in this subparagraph or the business entity or nonprofit organization that is the subcontractor.

EXHIBIT F

(federal wage rate package will be inserted here)

EXHIBIT G

(state wages will be inserted here)

CT1_dvb

General Decision Number: CT140001 01/31/2014 CT1

Superseded General Decision Number: CT20130001

State: Connecticut

Construction Type: Highway

Counties: Fairfield, Litchfield, Middlesex, New Haven, Tolland and Windham Counties in Connecticut.

HIGHWAY CONSTRUCTION PROJECTS

Modification Number	Publication Date
0	01/03/2014
1	01/31/2014

* BRCT0001-004 12/30/2013

	Rates	Fringes
BRICKLAYER		
BRICKLAYERS, CEMENT MASONS, CEMENT FINISHERS, PLASTERERS AND STONE MASONS	$ 32.50	27.06

CARP0024-006 05/06/2013

LITCHFIELD COUNTY
Harwinton, Plymouth, Thomaston, Watertown
MIDDLESEX COUNTY
NEW HAVEN COUNTY
Beacon Falls, Bethany, Branford, Cheshire, East Haven, Guilford, Hamden. Madison, Meriden, Middlebury, Naugatuck, New Haven, North Branford, North Haven, Orange (east of Orange Center Road and north of Route 1, and north of Route 1 and east of the Oyster River), Prospect, Southbury, Wallingford, Waterbury, West Haven, Wolcott, Woodbridge
TOLLAND COUNTY
Andover, Columbia, Coventry, Hebron, Mansfield, Union, Willington
WINDHAM COUNTY

	Rates	Fringes
Carpenters:		
CARPENTERS, PILEDRIVERS	$ 30.45	21.65
DIVER TENDERS	$ 30.45	21.65
DIVERS	$ 38.91	21.65
MILLWRIGHTS	$ 30.78	22.15

CARP0043-004 05/06/2013

	Rates	Fringes
Carpenters: (TOLLAND COUNTY Bolton, Ellington, Somers, Tolland, Vernon)		
CARPENTERS, PILEDRIVERS	$ 30.45	21.65
DIVER TENDERS	$ 30.45	21.65
DIVERS	$ 38.91	21.65

MILLWRIGHT.....$ 30.78 22.15

CARP0210-002 05/06/2013

	Rates	Fringes
Carpenters:		
CARPENTERS, PILEDRIVERS.....	$ 30.45	21.65
DIVER TENDERS.....	$ 30.45	21.65
DIVERS.....	$ 38.91	21.65
MILLWRIGHTS.....	$ 30.78	22.15

FAIRFIELD COUNTY

Bethel, Bridgeport, Brookfield, Danbury, Darien, Easton, Fairfield, Greenwich, Monroe, New Canaan, New Fairfield, Newtown, Norwalk, Redding, Ridgefield, Shelton, Sherman, Stamford, Stratford, Trumbull, Weston, Westport, Wilton;

LITCHFIELD COUNTY

Barkhamstead, Bethlehem, Bridgewater, Canaan, Colebrook, Cornwall, Goshen, Kent, Litchfield, Morris, New Hartford, New Milford, Norfolk, North Canaan, Roxbury, Salisbury, Sharon, Torrington, Warren, Washington, Winchester, Woodbury;

NEW HAVEN COUNTY

Ansonia, Derby, Milford, Orange (west of Orange Center Road and south of Route 1 and west of the Oyster River), Oxford, Seymour;

ELEC0003-002 05/08/2008

	Rates	Fringes
Electricians		
FAIRFIELD COUNTY		
Darien, Greenwich, New Canaan, Stamford.....	$ 44.75	30.42

ELEC0035-001 06/01/2013

	Rates	Fringes
Electricians:		
MIDDLESEX COUNTY (Cromwell, Middlefield, Middleton and Portland); TOLLAND COUNTY; WINDHAM COUNTY.....	$ 37.60	23.35

ELEC0090-002 06/01/2013

	Rates	Fringes
Electricians:.....	$ 36.75	23.67

LITCHFIELD COUNTY

Plymouth Township;

MIIDDLESEX COUNTY

Chester, Clinton, Deep River, Durham, East Haddam, East Hampton, Essex, Haddam, Killingworth, Old Saybrook, Westbrook;

NEW HAVEN COUNTY

All Townships excluding Beacon Falls, Middlebury,Milford, Naugatuck, Oxford, Prospect, Seymour, Southbury, Waterbury and Wolcott.

ELEC0488-002 06/01/2013

	Rates	Fringes
Electricians	$ 36.52	24.10

FAIRFIELD COUNTY

Bethel, Bridgeport, Brookfield, Danbury, Easton, Fairfield, Monroe, New Fairfield, Newtown, Norwalk, Redding, Ridgefield, Shelton, Sherman, Stratford, Trumbull, Weston, Westport and Wilton.

LITCHFIELD COUNTY

Except Plymouth;

NEW HAVEN COUNTY

Beacon Falls, Middlebury, Milford, Naugatuck, Oxford, Prospect, Seymour, Southbury, Waterbury and Wolcott

---

ENGI0478-001 04/07/2013

	Rates	Fringes
Power equipment operators:		
GROUP 1	$ 36.05	21.55
GROUP 2	$ 35.73	21.55
GROUP 3	$ 34.99	21.55
GROUP 4	$ 34.60	21.55
GROUP 5	$ 34.01	21.55
GROUP 6	$ 33.70	21.55
GROUP 7	$ 33.36	21.55
GROUP 8	$ 32.96	21.55
GROUP 9	$ 32.53	21.55
GROUP 10	$ 30.49	21.55
GROUP 11	$ 30.49	21.55
GROUP 12	$ 30.43	21.55
GROUP 13	$ 31.96	21.55
GROUP 14	$ 29.85	21.55
GROUP 15	$ 29.54	21.55
GROUP 16	$ 28.71	21.55
GROUP 17	$ 28.30	21.55
GROUP 18	$ 27.65	21.55

Hazardous waste premium $3.00 per hour over classified rate.

Crane with boom, including jib, 150 feet - $1.50 extra.
Crane with boom, including jib, 200 feet - $2.50 extra.
Crane with boom, including jib, 250 feet - $5.00 extra.
Crane with boom, including jib, 300 feet - $7.00 extra.
Crane with boom, including jib, 400 feet - $10.00 extra

a. PAID HOLIDAYS: New Year's Day, Good Friday, Memorial Day,

Independence Day, Labor Day, Thanksgiving Day and Christmas Day, provided the employee works 3 days during the week in which the holiday falls, if scheduled, and if scheduled, the working day before and the working day after the holiday.

POWER EQUIPMENT OPERATORS CLASSIFICATIONS

GROUP 1: Crane handling or erecting structural steel or stone, hoisting engineer (2 drums or over), front end loader (7 cubic yards or over), work boat 26 ft. and over.

GROUP 2: Cranes (100 ton capacity & over), Excavator over 2 cubic yards, piledriver ($3.00 premium when operator controls hammer).

GROUP 3: Excavator, cranes (under 100 ton rated capacity), gradall, master mechanic, hoisting engineer (all types of equipment where a drum and cable are used to hoist or drag material regardless of motive power or operation) Rubber Tire Excavator (drott 1085 or similar); Grader Operator; Bulldozer Fine Grade (slopes, shaping, laser or GPS, etc.)

GROUP 4: Trenching machines, lighter derrick, concrete finishing machine, CMI machine or similar, Koehring Loader (skooper).

GROUP 5: Specialty railroad equipment, asphalt spreader, asphalt reclaiming machine, line grider, concrete pumps, drills with self contained power units, boring machine, post hole digger, auger, pounder, well digger, milling machine (over 24' mandrel), side boom, combination hoe and loader, directional driller.

GROUP 6: Front end loader (3 cu. yds. up to 7 cu. yards), bulldozer (Rough grade dozer) .

GROUP 7: Asphalt roller, concrete saws and cutters (ride on types), Vermeer concrete cutter, stump grinder, scraper, snooper, skidder, milling machine (24" and under Mandrel).

GROUP 8: Mechanic, grease truck operator, hydoblaster, barrier mover, power stone spreader, welder, work boat under 26 ft. transfer machine.

GROUP 9: Front end loader (under 3 cubic yards), skid steer loader (regardless of attachments), bobcat or similar, forklift, power chipper, landscape equipment (including hydroseeder).

GROUP 10: Vibratory hammer,ice machine, diesel & air, hammer, etc.

GROUP 11: Conveyor, earth roller, power pavement breaker (whiphammer), robot demolition equipment.

GROUP 12: Wellpoint operator.

GROUP 13: Portable asphalt plant operator, portable concrete plant operator, portable crusher plant operator.

GROUP 14: Compressor battery operator.

GROUP 15: Power Safety boat, Vacuum truck, Zim mixer, Sweeper; (Minimum for any job requiring a CDL license) .

GROUP 16: Elevator operator, tow motor operator (solid tire no rough terrain).

GROUP 17: Generator operator, compressor operator, pump operator,welding machine operator; Heater operator.

GROUP 18: Maintenance engineer.

IRON0015-002 07/01/2013

	Rates	Fringes
Ironworkers: (Reinforcing, Structural and Precast Concrete Erection)	$ 33.50	28.98

a. PAID HOLIDAY: Labor Day provided employee has been on the payroll for the 5 consecutive work days prior to Labor Day.

LABO0056-003 04/07/2013

	Rates	Fringes
Laborers:		
GROUP 1	$ 26.40	17.15
GROUP 2	$ 26.65	17.15
GROUP 3	$ 26.90	17.15
GROUP 4	$ 27.40	17.15
GROUP 5	$ 28.15	17.15
GROUP 6	$ 28.40	17.15
GROUP 7	$ 16.00	17.15

LABORERS CLASSIFICATIONS

GROUP 1: Laborers (Unskilled), acetylene burner, concrete specialist

GROUP 2: Chain saw operators, fence and guard rail erectors, pneumatic tool operators and powdermen.

GROUP 3: Pipelayers, Jackhammer/Pavement breaker (handheld), mason tenders/catch basin builders, asphalt rakers, air track operators, block paver and curb setter

GROUP 4: Asbestos/lead removal

GROUP 5: Blasters

GROUP 6: Toxic waste remover

GROUP 7: Traffic control signalman

LABO0056-004 04/07/2013

	Rates	Fringes

Laborers: (TUNNEL CONSTRUCTION)

CLEANING, CONCRETE AND CAULKING TUNNEL:		
Concrete Workers, Form Movers and Strippers	$ 30.37	16.89
Form Erectors	$ 30.68	16.89
ROCK SHAFT, CONCRETE, LINING OF SAME AND TUNNEL IN FREE AIR:		
Brakemen, Trackmen, Tunnel Laborers, Shaft Laborers	$ 30.37	16.89
Laborers Topside, Cage Tenders, Bellman	$ 30.26	16.89
Miners	$ 31.28	16.89
SHIELD DRIVE AND LINER PLATE TUNNELS IN FREE AIR:		
Brakemen and Trackmen	$ 30.37	16.89
Miners, Motormen, Mucking Machine Operators, Nozzlemen, Grout Men, Shaft and Tunnel, Steel and Rodmen, Shield and Erector, Arm Operator, Cable Tenders	$ 31.28	16.89
TUNNELS, CAISSON AND CYLINDER WORK IN COMPRESSED AIR:		
Blaster	$ 37.41	16.89
Brakemen, Trackmen, Groutman, Laborers, Outside Lock Tender, Gauge Tenders	$ 37.22	16.89
Change House Attendants, Powder Watchmen, Top on Iron Bolts	$ 35.35	16.89
Mucking Machine Operator	$ 37.97	16.89

a. PAID HOLIDAYS: On tunnel work only: New Year's Day, Memorial Day, Independence Day, Labor Day, Thanksgiving Day and Christmas Day.

No employee shall be eligible for holiday pay when he fails, without cause, to work the regular work day preceding the holiday or the regular work day following the holiday.

PAIN0011-001 06/01/2013

	Rates	Fringes
Painters:		
Blast and Spray	$ 33.62	17.75
Brush and Roll	$ 30.62	17.75
Tanks, Towers, Swing	$ 32.62	17.75

PAIN0011-003 06/01/2013

	Rates	Fringes
Painters: (BRIDGE CONSTRUCTION)		

Brush, Roller, Blasting (Sand, Water, etc.) Spray	$ 43.15	17.75

TEAM0064-001 04/07/2013

	Rates	Fringes
Truck drivers:		
2 Axle Ready Mix	$ 27.98	18.27
2 Axle	$ 27.88	18.27
3 Axle Ready Mix	$ 28.03	18.27
3 Axle	$ 27.98	18.27
4 Axle Ready Mix	$ 28.13	18.27
4 Axle	$ 28.08	18.27
Heavy Duty Trailer 40 tons and over	$ 28.33	18.27
Heavy Duty Trailer up to 40 tons	$ 28.08	18.27
Specialized (Earth moving equipment other than conventional type on-the-road trucks and semi-trailers, including Euclids)	$ 28.13	18.27

Hazardous waste removal work receives additional $1.25 per hour.

a. PAID HOLIDAYS: New Year's Day, Memorial Day, Independence Day, Labor Day, Thanksgiving Day, Christmas Day and Good Friday, provided the employee has at least 31 calendar days of service and works the last scheduled day before and the first scheduled day after the holiday, unless excused.

WELDERS - Receive rate prescribed for craft performing operation to which welding is incidental.

==========

Unlisted classifications needed for work not included within the scope of the classifications listed may be added after award only as provided in the labor standards contract clauses (29CFR 5.5 (a) (1) (ii)).

The body of each wage determination lists the classification and wage rates that have been found to be prevailing for the cited type(s) of construction in the area covered by the wage determination. The classifications are listed in alphabetical order of "identifiers" that indicate whether the particular rate is union or non-union.

Union Identifiers

An identifier enclosed in dotted lines beginning with characters other than "SU" denotes that the union

classification and rate have found to be prevailing for that classification. Example: PLUM0198-005 07/01/2011. The first four letters , PLUM, indicate the international union and the four-digit number, 0198, that follows indicates the local union number or district council number where applicable , i.e., Plumbers Local 0198. The next number, 005 in the example, is an internal number used in processing the wage determination. The date, 07/01/2011, following these characters is the effective date of the most current negotiated rate/collective bargaining agreement which would be July 1, 2011 in the above example.

Union prevailing wage rates will be updated to reflect any changes in the collective bargaining agreements governing the rates.

0000/9999: weighted union wage rates will be published annually each January.

Non-Union Identifiers

Classifications listed under an "SU" identifier were derived from survey data by computing average rates and are not union rates; however, the data used in computing these rates may include both union and non-union data. Example: SULA2004-007 5/13/2010. SU indicates the rates are not union majority rates, LA indicates the State of Louisiana; 2004 is the year of the survey; and 007 is an internal number used in producing the wage determination. A 1993 or later date, 5/13/2010, indicates the classifications and rates under that identifier were issued as a General Wage Determination on that date.

Survey wage rates will remain in effect and will not change until a new survey is conducted.

WAGE DETERMINATION APPEALS PROCESS

1.) Has there been an initial decision in the matter? This can be:

* an existing published wage determination
* a survey underlying a wage determination
* a Wage and Hour Division letter setting forth a position on a wage determination matter
* a conformance (additional classification and rate) ruling

On survey related matters, initial contact, including requests for summaries of surveys, should be with the Wage and Hour Regional Office for the area in which the survey was conducted because those Regional Offices have responsibility for the Davis-Bacon survey program. If the response from this initial contact is not satisfactory, then the process described in 2.) and 3.) should be followed.

With regard to any other matter not yet ripe for the formal process described here, initial contact should be with the Branch of Construction Wage Determinations. Write to:

Branch of Construction Wage Determinations
Wage and Hour Division
U.S. Department of Labor
200 Constitution Avenue, N.W.
Washington, DC 20210

2.) If the answer to the question in 1.) is yes, then an interested party (those affected by the action) can request review and reconsideration from the Wage and Hour Administrator (See 29 CFR Part 1.8 and 29 CFR Part 7). Write to:

Wage and Hour Administrator
U.S. Department of Labor
200 Constitution Avenue, N.W.
Washington, DC 20210

The request should be accompanied by a full statement of the interested party's position and by any information (wage payment data, project description, area practice material, etc.) that the requestor considers relevant to the issue.

3.) If the decision of the Administrator is not favorable, an interested party may appeal directly to the Administrative Review Board (formerly the Wage Appeals Board). Write to:

Administrative Review Board
U.S. Department of Labor
200 Constitution Avenue, N.W.
Washington, DC 20210

4.) All decisions by the Administrative Review Board are final.

==========

END OF GENERAL DECISION

General Decision Number: CT120002 07/06/2012 CT2

Superseded General Decision Number: CT20100003

State: Connecticut

Construction Type: Highway

County: New London County in Connecticut.

HIGHWAY CONSTRUCTION PROJECTS

Modification Number	Publication Date
0	01/06/2012
1	01/20/2012
2	04/06/2012
3	06/01/2012
4	06/15/2012
5	07/06/2012

BRCT0001-003 03/31/2012

	Rates	Fringes
BRICKLAYER		
BRICKLAYERS, CEMENT MASONS, CEMENT FINISHERS, PLASTERERS, STONE MASONS	$ 32.50	24.55

CARP0024-002 05/07/2012

	Rates	Fringes
Carpenters:		
Carpenters, Piledrivers	$ 29.65	21.00
Diver Tenders	$ 29.65	21.00
Divers	$ 38.11	21.00

---

* ELEC0035-003 06/01/2012

	Rates	Fringes
Electricians:		
Bozrah, Colchester, Franklin, Griswold, Lebanon, Ledyard, Lisbon, Montville, North Stonington, Norwich, Preston, Salem, Sprague, Stonington and Voluntown	$ 37.10	22.12

ELEC0090-003 06/01/2010

East Lyme, Groton, New London, Old Lyme, Waterford, plus the part of Ledyard wherein the property of the Submarine Base is located

	Rates	Fringes
ELECTRICIAN	$ 35.20	20.51

ENGI0478-002 04/01/2012

	Rates	Fringes
Power equipment operators:		
GROUP 1	$ 35.50	20.50+a
GROUP 2	$ 35.18	20.50+a
GROUP 3	$ 34.44	20.50+a
GROUP 4	$ 34.05	20.50+a
GROUP 5	$ 33.46	20.50+a
GROUP 6	$ 33.15	20.50+a
GROUP 7	$ 32.81	20.50+a
GROUP 8	$ 32.41	20.50+a
GROUP 9	$ 31.98	20.50+a
GROUP 10	$ 29.94	20.50+a
GROUP 11	$ 29.94	20.50+a
GROUP 12	$ 29.88	20.50+a
GROUP 13	$ 31.41	20.50+a

GROUP 14.....$ 29.30 20.50+a
GROUP 15.....$ 28.99 20.50+a
GROUP 16.....$ 28.16 20.50+a
GROUP 17.....$ 27.75 20.50+a
GROUP 18.....$ 27.10 20.50+a

Hazardous waste premium $3.00 per hour over classified rate.

Crane with 150 ft. boom (including jib): $1.50 extra.
Crane with 200 ft. boom (including jib): $2.50 extra.
Crane with 250 ft. boom (including jib): $5.00 extra.
Crane with 300 ft. boom (including jib): $7.00 extra.
Crane with 400 ft. boom (including jib); $10.00 extra.

a. PAID HOLIDAYS: New Year's Day, Good Friday, Memorial Day, Independence Day, Labor Day, Thanksgiving Day and Christmas Day, provided the employee works 3 days during the week in which the holiday falls, if scheduled, and if scheduled, the working day before and the working day after the holiday.

POWER EQUIPMENT OPERATORS CLASSIFICATIONS

GROUP 1: Crane Handling or Erecting Structural Steel or tone; Hoisting Engineer (2 drums or over); Front End Loader (7 cubic yards or over) Work Boat 26 ft. & over.

GROUP 2: Cranes (100 ton rated capacity and over); Excavator over 2 cubic yards; Piledriver ($3.00 premium when operator controls hammer).

GROUP 3: Excavator; Cranes (under 100 ton rated capacity), Gradall; Master Mechanic; Hoisting Engineer (all types of equipment where a drum and cable are used to hoist or drag material regardless of motive power of operation), Rubber tire Excavator (Drott-1085 or similar); Grader Operator; Bulldozer Fine Grade (slopes. shaping, laser or GPS, etc.)

GROUP 4: Trenching machines; Lighter Derrick; Concrete Finishing Machine, cmi Machine or Similar; Koehring Loader Skooper).

GROUP 5: Specialty Railroad Equipment; Asphalt Spreader; Asphalt Reclaiming achine; Line Grinder; Concrete Pumps; Drills with Self Contained Power Units; Boring Machine; Post Hole Digger; Auger; Pounder; Well Digger; Milling Machine (over 24" Mandrell); Side Boom; Combination Hoe and Loader; Directional Driller.

GROUP 6: Front End Loader (3 cu. yds. up to 7 cubic yards); Bulldozer (Rough grade dozer).

GROUP 7: Asphalt Roller; Concrete Saws and Cutters (Ride on Types); Vermeer Concrete Cutter; Stump Grinder; Scraper; Snooper; Skidder; Milling Machine (24" and Under Mandrel).

GROUP 8: Mechanic; Grease Truck Operator; Hydroblaster; Barrier Mover; Power Stone Spreader; Welder; Work Boat Under 26 ft.; Transfer Machine.

GROUP 9: Front End Loader (under 3 cubic yards); Skid Steer Loader (regardless of attachments); (Bobcat or similar); Fork Lift; Power Chipper; Landscape Equipment (including Hydroseeder).

GROUP 10: Vibratory Hammer, Ice Machine, Diesel and Air Hammer, etc.

GROUP 11: Conveyor; Earth Roller; Power Pavement Breaker (Whiphammer); Robot Demolition Equipment.

GROUP 12: Wellpoint Operator.

GROUP 13: Portable Asphalt Plant Operator; Portable Concrete Plant Operator; Portable Crusher Plant Operator.

GROUP 14: Compressor Battery Operator.

GROUP 15: Power Safety Boat; Vacuum Truck; Zim Mixer; Sweeper; (Minimum for any job requiring a CDL License)

GROUP 16: Elevator Operator; Tow Motor Operator (Solid Tire No Rough Terrain).

GROUP 17: Generator Operator; Compressor Operator; Pump Operator; Welding Machine Operator; Heater operator.

GROUP 18: Maintenance Engineer.

---

* IRON0015-003 07/02/2012

	Rates	Fringes
Ironworkers: (Reinforcing & Structural)	$ 33.50	27.98+a

a. PAID HOLIDAY: Labor Day provided employee has been on the payroll for the 5 consecutive work days prior to Labor Day.

LABO0056-003 04/01/2012

	Rates	Fringes
Laborers:		
GROUP 1	$ 25.80	16.45
GROUP 2	$ 26.05	16.45
GROUP 3	$ 26.30	16.45
GROUP 4	$ 26.80	16.45
GROUP 5	$ 27.55	16.45
GROUP 6	$ 27.80	16.45
GROUP 7	$ 16.00	16.45

LABORERS CLASSIFICATIONS

GROUP 1: Laborers (Unskilled), acetylene burner, concrete specialist

GROUP 2: Chain saw operators, fence and guard rail erectors, pneumatic tool operators and powdermen.

GROUP 3: Pipelayers, Jackhammer/Pavement breaker (handheld), mason tenders/catch basin builders, asphalt rakers, air track operators, block paver and curb setter

GROUP 4: Asbestos/lead removal

GROUP 5: Blasters

GROUP 6: Toxic waste remover

GROUP 7: Traffic control signalman

PAIN0011-002 06/01/2012

	Rates	Fringes
Painters:		
Blast and Spray	$ 33.22	16.90
Brush and Roll	$ 30.22	16.90
Tanks, Towers, Swing	$ 32.22	16.90

PAIN0011-003 06/01/2012

	Rates	Fringes
Painters: (BRIDGE CONSTRUCTION)		
Brush, Roller, Blasting (Sand, Water, etc.) Spray	$ 42.75	16.90

TEAM0064-003 04/01/2012

	Rates	Fringes
Truck drivers:		
2 Axle Ready Mix	$ 27.98	17.22+a
2 Axle	$ 27.88	17.22+a
3 Axle Ready Mix	$ 28.03	17.22+a
3 Axle	$ 27.98	17.22+a
4 Axle Ready Mix	$ 28.13	17.22+a
4 Axle	$ 28.08	17.22+a

Heavy Duty Trailer 40 tons and over	$ 28.33	17.22+a
Heavy Duty Trailer up to 40 tons	$ 28.08	17.22+a
Specialized (Earth moving equipment other than conventional type on-the-road trucks and semi-trailers, including Euclids)	$ 28.13	17.22+a

Hazardous waste removal work receives additional $1.25 per hour.

a. PAID HOLIDAYS: New Year's Day, Memorial Day, Independence Day, Labor Day, Thanksgiving Day, Christmas Day and Good Friday, provided the employee has at least 31 calendar days of service and works the last scheduled day before and the first scheduled day after the holiday, unless excused.

WELDERS - Receive rate prescribed for craft performing operation to which welding is incidental.

==========

Unlisted classifications needed for work not included within the scope of the classifications listed may be added after award only as provided in the labor standards contract clauses (29CFR 5.5 (a) (1) (ii)).

The body of each wage determination lists the classification and wage rates that have been found to be prevailing for the cited type(s) of construction in the area covered by the wage determination. The classifications are listed in alphabetical order of "identifiers" that indicate whether the particular rate is union or non-union.

Union Identifiers

An identifier enclosed in dotted lines beginning with characters other than "SU" denotes that the union classification and rate have found to be prevailing for that classification. Example: PLUM0198-005 07/01/2011. The first four letters , PLUM, indicate the international union and the four-digit number, 0198, that follows indicates the local union number or district council number where applicable , i.e., Plumbers Local 0198. The next number, 005 in the example, is an internal number used in processing the wage determination. The date, 07/01/2011, following these characters is the effective date of the most current negotiated rate/collective bargaining agreement which would be July 1, 2011 in the above example.

Union prevailing wage rates will be updated to reflect any changes in the collective bargaining agreements governing the rate.

Non-Union Identifiers

Classifications listed under an "SU" identifier were derived from survey data by computing average rates and are not union rates; however, the data used in computing these rates may include both union and non-union data. Example: SULA2004-007 5/13/2010. SU indicates the rates are not union rates, LA indicates the State of Louisiana; 2004 is the year of the survey; and 007 is an internal number used in producing the wage determination. A 1993 or later date, 5/13/2010, indicates the classifications and rates under that identifier were issued as a General Wage Determination on that date.

Survey wage rates will remain in effect and will not change until a new survey is conducted.

WAGE DETERMINATION APPEALS PROCESS

1.) Has there been an initial decision in the matter? This can be:

* an existing published wage determination
* a survey underlying a wage determination
* a Wage and Hour Division letter setting forth a position on a wage determination matter
* a conformance (additional classification and rate) ruling

On survey related matters, initial contact, including requests for summaries of surveys, should be with the Wage and Hour Regional Office for the area in which the survey was conducted because those Regional Offices have responsibility for the Davis-Bacon survey program. If the response from this initial contact is not satisfactory, then the process described in 2.) and 3.) should be followed.

With regard to any other matter not yet ripe for the formal process described here, initial contact should be with the Branch of Construction Wage Determinations. Write to:

Branch of Construction Wage Determinations
Wage and Hour Division
U.S. Department of Labor
200 Constitution Avenue, N.W.
Washington, DC 20210

2.) If the answer to the question in 1.) is yes, then an interested party (those affected by the action) can request review and reconsideration from the Wage and Hour Administrator (See 29 CFR Part 1.8 and 29 CFR Part 7). Write to:

Wage and Hour Administrator
U.S. Department of Labor
200 Constitution Avenue, N.W.
Washington, DC 20210

The request should be accompanied by a full statement of the interested party's position and by any information (wage payment data, project description, area practice material, etc.) that the requestor considers relevant to the issue.

3.) If the decision of the Administrator is not favorable, an interested party may appeal directly to the Administrative Review Board (formerly the Wage Appeals Board). Write to:

Administrative Review Board
U.S. Department of Labor
200 Constitution Avenue, N.W.
Washington, DC 20210

4.) All decisions by the Administrative Review Board are final.

==========

END OF GENERAL DECISION

General Decision Number: CT140003 01/31/2014 CT3

Superseded General Decision Number: CT20130003

State: Connecticut

Construction Type: Highway

County: Hartford County in Connecticut.

HIGHWAY CONSTRUCTION PROJECTS

Modification Number	Publication Date
0	01/03/2014
1	01/31/2014

* BRCT0001-003 12/30/2013

	Rates	Fringes
BRICKLAYER		
BRICKLAYERS, CEMENT MASONS, CEMENT FINISHERS, PLASTERERS, STONE MASONS	$ 32.50	27.06

CARP0024-005 05/06/2013

	Rates	Fringes
Carpenters: (Berlin, Bristol, Burlington,Canton, Marlborough, New Britain, Newington, Plainville, Southington)		
CARPENTERS; PILEDRIVERS	$ 30.45	21.65
DIVER TENDERS	$ 30.45	21.65
DIVERS	$ 38.91	21.65
MILLWRIGHTS	$ 30.78	22.15

CARP0043-003 05/06/2013

	Rates	Fringes
Carpenters: (Avon, Bloomfied, East Granby, East Hartford, East Windsor, Enfield, Farmington, Glastonbury, Granby, Hartford, hartland, Manchester, Rocky Hill, Simsbury, South Windsor, Suffield, West Hartford, Wethersfield, Windsor, Windsor Locks)		
CARPENTERS; PILEDRIVERS	$ 30.45	21.65
DIVER TENDERS	$ 30.45	21.65
DIVERS	$ 38.91	21.65
MILLWRIGHTS	$ 30.78	22.15

ELEC0035-002 06/01/2013

	Rates	Fringes
Electricians:		

Entire County, excluding
Berlin, Bristol, Hartland,
New Britain, Newington,
Plainville and Southington..$ 37.60 23.35

ELEC0090-001 06/01/2010

	Rates	Fringes
Electricians:		
Berlin, Bristol, New Britain, Newington, Plainville, Southington.....	$ 35.20	20.51

ELEC0488-004 06/01/2013

	Rates	Fringes
Electricians:.....	$ 36.52	24.10

ENGI0478-002 04/07/2013

	Rates	Fringes
Power equipment operators:		
GROUP 1.....	$ 36.05	21.55
GROUP 2.....	$ 35.73	21.55
GROUP 3.....	$ 34.99	21.55
GROUP 4.....	$ 34.60	21.55
GROUP 5.....	$ 34.01	21.55
GROUP 6.....	$ 33.70	21.55
GROUP 7.....	$ 33.36	21.55
GROUP 8.....	$ 32.96	21.55
GROUP 9.....	$ 32.53	21.55
GROUP 10.....	$ 30.49	21.55
GROUP 11.....	$ 30.49	21.55
GROUP 12.....	$ 30.43	21.55
GROUP 13.....	$ 31.96	21.55
GROUP 14.....	$ 29.85	21.55
GROUP 15.....	$ 29.54	21.55
GROUP 16.....	$ 28.71	21.55
GROUP 17.....	$ 28.30	21.55
GROUP 18.....	$ 27.65	21.55

Hazardous waste premium $3.00 per hour over classified rate.

Crane with 150 ft. boom (including jib): $1.50 extra.
Crane with 200 ft. boom (including jib): $2.50 extra.
Crane with 250 ft. boom (including jib): $5.00 extra.
Crane with 300 ft. boom (including jib): $7.00 extra.
Crane with 400 ft. boom (including jib); $10.00 extra.

a. PAID HOLIDAYS: New Year's Day, Good Friday, Memorial Day, Independence Day, Labor Day, Thanksgiving Day and Christmas Day, provided the employee works 3 days during the week in which the holiday falls, if scheduled, and if scheduled, the working day before and the working day after the holiday.

POWER EQUIPMENT OPERATORS CLASSIFICATIONS

GROUP 1: Crane Handling or Erecting Structural Steel or tone; Hoisting Engineer (2 drums or over); Front End Loader

(7 cubic yards or over) Work Boat 26 ft. & over.

GROUP 2: Cranes (100 ton rated capacity and over); Excavator over 2 cubic yards; Piledriver ($3.00 premium when operator controls hammer).

GROUP 3: Excavator; Cranes (under 100 ton rated capacity), Gradall; Master Mechanic; Hoisting Engineer (all types of equipment where a drum and cable are used to hoist or drag material regardless of motive power of operation), Rubber tire Excavator (Drott-1085 or similar); Grader Operator; Bulldozer Fine Grade (slopes. shaping, laser or GPS, etc.)

GROUP 4: Trenching machines; Lighter Derrick; Concrete Finishing Machine, cmi Machine or Similar; Koehring Loader Skooper).

GROUP 5: Specialty Railroad Equipment; Asphalt Spreader; Asphalt Reclaiming achine; Line Grinder; Concrete Pumps; Drills with Self Contained Power Units; Boring Machine; Post Hole Digger; Auger; Pounder; Well Digger; Milling Machine (over 24" Mandrell); Side Boom; Combination Hoe and Loader; Directional Driller.

GROUP 6: Front End Loader (3 cu. yds. up to 7 cubic yards); Bulldozer (Rough grade dozer).

GROUP 7: Asphalt Roller; Concrete Saws and Cutters (Ride on Types); Vermeer Concrete Cutter; Stump Grinder; Scraper; Snooper; Skidder; Milling Machine (24" and Under Mandrel).

GROUP 8: Mechanic; Grease Truck Operator; Hydroblaster; Barrier Mover; Power Stone Spreader; Welder; Work Boat Under 26 ft.; Transfer Machine.

GROUP 9: Front End Loader (under 3 cubic yards); Skid Steer Loader (regardless of attachments); (Bobcat or similar); Fork Lift; Power Chipper; Landscape Equipment (including Hydroseeder).

GROUP 10: Vibratory Hammer, Ice Machine, Diesel and Air Hammer, etc.

GROUP 11: Conveyor; Earth Roller; Power Pavement Breaker (Whiphammer); Robot Demolition Equipment.

GROUP 12: Wellpoint Operator.

GROUP 13: Portable Asphalt Plant Operator; Portable Concrete Plant Operator; Portable Crusher Plant Operator.

GROUP 14: Compressor Battery Operator.

GROUP 15: Power Safety Boat; Vacuum Truck; Zim Mixer; Sweeper; (Minimum for any job requiring a CDL License)

GROUP 16: Elevator Operator; Tow Motor Operator (Solid Tire No Rough Terrain).

GROUP 17: Generator Operator; Compressor Operator; Pump Operator; Welding Machine Operator; Heater operator.

GROUP 18: Maintenance Engineer.

IRON0015-002 07/01/2013

	Rates	Fringes
Ironworkers: (Reinforcing, Structural and Precast Concrete Erection)	$ 33.50	28.98

a. PAID HOLIDAY: Labor Day provided employee has been on the payroll for the 5 consecutive work days prior to Labor Day.

LABO0056-003 04/07/2013

	Rates	Fringes
Laborers:		
GROUP 1	$ 26.40	17.15
GROUP 2	$ 26.65	17.15
GROUP 3	$ 26.90	17.15
GROUP 4	$ 27.40	17.15
GROUP 5	$ 28.15	17.15
GROUP 6	$ 28.40	17.15
GROUP 7	$ 16.00	17.15

LABORERS CLASSIFICATIONS

GROUP 1: Laborers (Unskilled), acetylene burner, concrete specialist

GROUP 2: Chain saw operators, fence and guard rail erectors, pneumatic tool operators and powdermen.

GROUP 3: Pipelayers, Jackhammer/Pavement breaker (handheld), mason tenders/catch basin builders, asphalt rakers, air track operators, block paver and curb setter

GROUP 4: Asbestos/lead removal

GROUP 5: Blasters

GROUP 6: Toxic waste remover

GROUP 7: Traffic control signalman

LABO0056-004 04/07/2013

	Rates	Fringes
Laborers: (TUNNEL CONSTRUCTION)		
CLEANING, CONCRETE AND CAULKING TUNNEL:		
Concrete Workers, Form Movers and Strippers	$ 30.37	16.89
Form Erectors	$ 30.68	16.89
ROCK SHAFT, CONCRETE, LINING OF SAME AND TUNNEL IN FREE AIR:		

Brakemen, Trackmen,
Tunnel Laborers, Shaft
Laborers.....$ 30.37 16.89
Laborers Topside, Cage
Tenders, Bellman.....$ 30.26 16.89
Miners.....$ 31.28 16.89
SHIELD DRIVE AND LINER
PLATE TUNNELS IN FREE AIR:
Brakemen and Trackmen.....$ 30.37 16.89
Miners, Motormen, Mucking
Machine Operators,
Nozzlemen, Grout Men,
Shaft and Tunnel, Steel
and Rodmen, Shield and
Erector, Arm Operator,
Cable Tenders.....$ 31.28 16.89
TUNNELS, CAISSON AND
CYLINDER WORK IN
COMPRESSED AIR:
Blaster.....$ 37.41 16.89
Brakemen, Trackmen,
Groutman, Laborers,
Outside Lock Tender,
Gauge Tenders.....$ 37.22 16.89
Change House Attendants,
Powder Watchmen, Top on
Iron Bolts.....$ 35.35 16.89
Mucking Machine Operator...$ 37.97 16.89

a. PAID HOLIDAYS: On tunnel work only: New Year's Day, Memorial Day, Independence Day, Labor Day, Thanksgiving Day and Christmas Day.

No employee shall be eligible for holiday pay when he fails, without cause, to work the regular work day preceding the holiday or the regular work day following the holiday.

PAIN0011-003 06/01/2013

	Rates	Fringes
Painters: (BRIDGE CONSTRUCTION)		
Brush, Roller, Blasting (Sand, Water, etc.) Spray	$ 43.15	17.75

PAIN0011-004 06/01/2013

	Rates	Fringes
Painters:		
Blast and Spray	$ 33.62	17.75
Brush and Roll	$ 30.62	17.75
Tanks, Towers, Swing	$ 32.62	17.75

TEAM0064-005 04/07/2013

	Rates	Fringes
Truck drivers:		
2 Axle Ready Mix	$ 27.98	18.27
2 Axle	$ 27.88	18.27

3 Axle Ready Mix	$ 28.03	18.27
3 Axle	$ 27.98	18.27
4 Axle Ready Mix	$ 28.13	18.27
4 Axle	$ 28.08	18.27
Heavy Duty Trailer 40 tons and over	$ 28.33	18.27
Heavy Duty Trailer up to 40 tons	$ 28.08	18.27
Specialized (Earth moving equipment other than conventional type on-the-road trucks and semi-trailers, including Euclids)	$ 28.13	18.27

Hazardous waste removal work receives additional $1.25 per hour.

a. PAID HOLIDAYS: New Year's Day, Memorial Day, Independence Day, Labor Day, Thanksgiving Day, Christmas Day and Good Friday, provided the employee has at least 31 calendar days of service and works the last scheduled day before and the first scheduled day after the holiday, unless excused.

WELDERS - Receive rate prescribed for craft performing operation to which welding is incidental.

==========

Unlisted classifications needed for work not included within the scope of the classifications listed may be added after award only as provided in the labor standards contract clauses (29CFR 5.5 (a) (1) (ii)).

The body of each wage determination lists the classification and wage rates that have been found to be prevailing for the cited type(s) of construction in the area covered by the wage determination. The classifications are listed in alphabetical order of "identifiers" that indicate whether the particular rate is union or non-union.

Union Identifiers

An identifier enclosed in dotted lines beginning with characters other than "SU" denotes that the union classification and rate have found to be prevailing for that classification. Example: PLUM0198-005 07/01/2011. The first four letters , PLUM, indicate the international union and the four-digit number, 0198, that follows indicates the local union number or district council number where applicable , i.e., Plumbers Local 0198. The next number, 005 in the example, is an internal number used in processing the wage determination. The date, 07/01/2011, following these characters is the effective date of the most current negotiated rate/collective bargaining agreement which would be July 1, 2011 in the above

example.

Union prevailing wage rates will be updated to reflect any changes in the collective bargaining agreements governing the rates.

0000/9999: weighted union wage rates will be published annually each January.

Non-Union Identifiers

Classifications listed under an "SU" identifier were derived from survey data by computing average rates and are not union rates; however, the data used in computing these rates may include both union and non-union data. Example: SULA2004-007 5/13/2010. SU indicates the rates are not union majority rates, LA indicates the State of Louisiana; 2004 is the year of the survey; and 007 is an internal number used in producing the wage determination. A 1993 or later date, 5/13/2010, indicates the classifications and rates under that identifier were issued as a General Wage Determination on that date.

Survey wage rates will remain in effect and will not change until a new survey is conducted.

WAGE DETERMINATION APPEALS PROCESS

1.) Has there been an initial decision in the matter? This can be:

* an existing published wage determination
* a survey underlying a wage determination
* a Wage and Hour Division letter setting forth a position on a wage determination matter
* a conformance (additional classification and rate) ruling

On survey related matters, initial contact, including requests for summaries of surveys, should be with the Wage and Hour Regional Office for the area in which the survey was conducted because those Regional Offices have responsibility for the Davis-Bacon survey program. If the response from this initial contact is not satisfactory, then the process described in 2.) and 3.) should be followed.

With regard to any other matter not yet ripe for the formal process described here, initial contact should be with the Branch of Construction Wage Determinations. Write to:

Branch of Construction Wage Determinations
Wage and Hour Division
U.S. Department of Labor
200 Constitution Avenue, N.W.
Washington, DC 20210

2.) If the answer to the question in 1.) is yes, then an interested party (those affected by the action) can request review and reconsideration from the Wage and Hour Administrator (See 29 CFR Part 1.8 and 29 CFR Part 7). Write to:

Wage and Hour Administrator
U.S. Department of Labor
200 Constitution Avenue, N.W.
Washington, DC 20210

The request should be accompanied by a full statement of the interested party's position and by any information (wage payment data, project description, area practice material, etc.) that the requestor considers relevant to the issue.

3.) If the decision of the Administrator is not favorable, an interested party may appeal directly to the Administrative Review Board (formerly the Wage Appeals Board). Write to:

Administrative Review Board
U.S. Department of Labor
200 Constitution Avenue, N.W.
Washington, DC 20210

4.) All decisions by the Administrative Review Board are final.

==========

END OF GENERAL DECISION

General Decision Number: CT120005 01/06/2012 CT5

Superseded General Decision Number: CT20100007

State: Connecticut

Construction Types: Heavy Dredging

Counties: Fairfield, Middlesex, New Haven and New London Counties in Connecticut.

HOPPER DREDGING CONSTRUCTION PROJECTS

Modification Number	Publication Date
0	01/06/2012

SUCT1993-001 05/20/1993

	Rates	Fringes
Self-Propelled Hopper Dredge Drag Tenders	$ 8.21	

WELDERS - Receive rate prescribed for craft performing operation to which welding is incidental.

==========

Unlisted classifications needed for work not included within the scope of the classifications listed may be added after award only as provided in the labor standards contract clauses (29CFR 5.5 (a) (1) (ii)).

The body of each wage determination lists the classification and wage rates that have been found to be prevailing for the cited type(s) of construction in the area covered by the wage determination. The classifications are listed in alphabetical order of "identifiers" that indicate whether the particular rate is union or non-union.

Union Identifiers

An identifier enclosed in dotted lines beginning with characters other than "SU" denotes that the union classification and rate have found to be prevailing for that classification. Example: PLUM0198-005 07/01/2011. The first four letters , PLUM, indicate the international union and the four-digit number, 0198, that follows indicates the local union number or district council number where applicable , i.e., Plumbers Local 0198. The next number, 005 in the example, is an internal number used in processing the wage determination. The date, 07/01/2011, following these characters is the effective date of the most current negotiated rate/collective bargaining agreement which would be July 1, 2011 in the above example.

Union prevailing wage rates will be updated to reflect any changes in the collective bargaining agreements governing the rate.

Non-Union Identifiers

Classifications listed under an "SU" identifier were derived from survey data by computing average rates and are not union rates; however, the data used in computing these rates may include both union and non-union data. Example: SULA2004-007 5/13/2010. SU indicates the rates are not union rates, LA indicates the State of Louisiana; 2004 is the year of the survey; and 007 is an internal number used in producing the wage determination. A 1993 or later date, 5/13/2010, indicates the classifications and rates under that identifier were issued as a General Wage Determination on that date.

Survey wage rates will remain in effect and will not change until a new survey is conducted.

WAGE DETERMINATION APPEALS PROCESS

1.) Has there been an initial decision in the matter? This can be:

* an existing published wage determination
* a survey underlying a wage determination
* a Wage and Hour Division letter setting forth a position on a wage determination matter
* a conformance (additional classification and rate) ruling

On survey related matters, initial contact, including requests for summaries of surveys, should be with the Wage and Hour Regional Office for the area in which the survey was conducted because those Regional Offices have responsibility for the Davis-Bacon survey program. If the response from this initial contact is not satisfactory, then the process described in 2.) and 3.) should be followed.

With regard to any other matter not yet ripe for the formal process described here, initial contact should be with the Branch of Construction Wage Determinations. Write to:

Branch of Construction Wage Determinations
Wage and Hour Division
U.S. Department of Labor
200 Constitution Avenue, N.W.
Washington, DC 20210

2.) If the answer to the question in 1.) is yes, then an interested party (those affected by the action) can request review and reconsideration from the Wage and Hour Administrator (See 29 CFR Part 1.8 and 29 CFR Part 7). Write to:

Wage and Hour Administrator
U.S. Department of Labor
200 Constitution Avenue, N.W.
Washington, DC 20210

The request should be accompanied by a full statement of the interested party's position and by any information (wage payment data, project description, area practice material, etc.) that the requestor considers relevant to the issue.

3.) If the decision of the Administrator is not favorable, an interested party may appeal directly to the Administrative Review Board (formerly the Wage Appeals Board). Write to:

Administrative Review Board
U.S. Department of Labor
200 Constitution Avenue, N.W.
Washington, DC 20210

4.) All decisions by the Administrative Review Board are final.

==========

END OF GENERAL DECISION

General Decision Number: CT140006 01/24/2014 CT6

Superseded General Decision Number: CT20130006

State: Connecticut

Construction Type: Heavy Dredging

Counties: Connecticut Statewide.

CONNECTICUT

ALL DREDGING, EXCEPT SELF-PROPELLED HOPPER DREDGES, ON THE ATLANTIC OCEAN AND TRIBUTARY WATERS EMPTYING INTO THE ATLANTIC OCEAN.

Modification Number	Publication Date
0	01/03/2014
1	01/24/2014

* ENGI0025-001 10/01/2013

STATEWIDE

	Rates	Fringes
Dredging:		
CLASS A	$ 34.73	14.13+a+b
CLASS B1	$ 30.05	13.75+a+b
CLASS B2	$ 28.30	13.61+a+b
CLASS C1	$ 27.54	12.80+a+b
CLASS C2	$ 26.65	12.73+a+b
CLASS D	$ 22.17	11.62+a+b

CLASSIFICATIONS:

CLASS A: Lead Dredgeman, Operator, Leverman, Licensed Tug Operator over 1000 HP.

CLASS B1: Derrick Operator, Spider/Spill Barge Operator, Engineer, Electrician, Chief Welder, Chief Mate, Fill Placer, Operator II, Maintenance Engineer, Licensed Boat Operator.

CLASS B2: Certified Welder.

CLASS C1: Mate, Drag Barge Operator, Steward, Assistant Fill Placer, Welder.

CLASS C2: Boat Operator

CLASS D: Shoreman, Deckhand, Rodman, Scowman, Cook, Messman, Porter/Janitor, Oiler.

Eight percent (8%) of the straight time rate, multiplied by the total hours worked.

INCENTIVE PAY: (Add to Hourly Rate)

Operator (NCCCO License/Certification) $1.50 Licensed Tug Operator over 1000 HP (Assigned as Master) (USCG licensed Master of Towing Vessels (MOTV) $1.50;
Licensed Boat Operator (Assigned as lead boat captain) USCG licensed boat operator $1.00;
Engineer (QMED and Tankerman endorsement or licensed engineer (USCG) $1.50
Oiler (QMED and Tankerman endorsement (USCG) $1.50; All classifications (Tankerman endorsement only) USCG $1.25;
Deckhand or Mate (AB with Lifeboatman endorsement (USCG) $1.50; All classifications (lifeboatman endorsement only (USCG) $1.25; Welder (ABS certification) $0.50

WELDERS - Receive rate prescribed for craft performing operation to which welding is incidental.

==========

Unlisted classifications needed for work not included within the scope of the classifications listed may be added after award only as provided in the labor standards contract clauses (29CFR 5.5 (a) (1) (ii)).

The body of each wage determination lists the classification and wage rates that have been found to be prevailing for the cited type(s) of construction in the area covered by the wage determination. The classifications are listed in alphabetical order of "identifiers" that indicate whether the particular rate is union or non-union.

Union Identifiers

An identifier enclosed in dotted lines beginning with characters other than "SU" denotes that the union classification and rate have found to be prevailing for that classification. Example: PLUM0198-005 07/01/2011. The first four letters , PLUM, indicate the international union and the four-digit number, 0198, that follows indicates the local union number or district council number where applicable , i.e., Plumbers Local 0198. The next number, 005 in the example, is an internal number used in processing the wage determination. The date, 07/01/2011, following these characters is the effective date of the most current negotiated rate/collective bargaining agreement which would be July 1, 2011 in the above example.

Union prevailing wage rates will be updated to reflect any changes in the collective bargaining agreements governing the rates.

0000/9999: weighted union wage rates will be published annually each January.

Non-Union Identifiers

Classifications listed under an "SU" identifier were derived from survey data by computing average rates and are not union rates; however, the data used in computing these rates may include both union and non-union data. Example: SULA2004-007 5/13/2010. SU indicates the rates are not union majority rates, LA indicates the State of Louisiana; 2004 is the year of the survey; and 007 is an internal number used in producing the wage determination. A 1993 or later date, 5/13/2010, indicates the classifications and rates under that identifier were issued as a General Wage Determination on that date.

Survey wage rates will remain in effect and will not change until a new survey is conducted.

WAGE DETERMINATION APPEALS PROCESS

1.) Has there been an initial decision in the matter? This can be:

* an existing published wage determination
* a survey underlying a wage determination
* a Wage and Hour Division letter setting forth a position on a wage determination matter
* a conformance (additional classification and rate) ruling

On survey related matters, initial contact, including requests for summaries of surveys, should be with the Wage and Hour Regional Office for the area in which the survey was conducted because those Regional Offices have responsibility for the Davis-Bacon survey program. If the response from this initial contact is not satisfactory, then the process described in 2.) and 3.) should be followed.

With regard to any other matter not yet ripe for the formal process described here, initial contact should be with the Branch of Construction Wage Determinations. Write to:

Branch of Construction Wage Determinations
Wage and Hour Division
U.S. Department of Labor
200 Constitution Avenue, N.W.
Washington, DC 20210

2.) If the answer to the question in 1.) is yes, then an interested party (those affected by the action) can request review and reconsideration from the Wage and Hour Administrator (See 29 CFR Part 1.8 and 29 CFR Part 7). Write to:

Wage and Hour Administrator
U.S. Department of Labor
200 Constitution Avenue, N.W.
Washington, DC 20210

The request should be accompanied by a full statement of the interested party's position and by any information (wage payment data, project description, area practice material, etc.) that the requestor considers relevant to the issue.

3.) If the decision of the Administrator is not favorable, an interested party may appeal directly to the Administrative Review Board (formerly the Wage Appeals Board). Write to:

Administrative Review Board
U.S. Department of Labor
200 Constitution Avenue, N.W.
Washington, DC 20210

4.) All decisions by the Administrative Review Board are final.

==========

END OF GENERAL DECISION

General Decision Number: CT140013 01/31/2014 CT13

Superseded General Decision Number: CT20130013

State: Connecticut

Construction Type: Heavy

County: Fairfield County in Connecticut.

HEAVY CONSTRUCTION PROJECTS

Modification Number	Publication Date
0	01/03/2014
1	01/31/2014

* BRCT0001-011 12/30/2013

	Rates	Fringes
BRICKLAYER	$ 32.50	27.06

---

* BRCT0001-012 12/30/2013

	Rates	Fringes
CEMENT MASON/CONCRETE FINISHER	$ 32.50	27.06

CARP0210-005 05/06/2013

	Rates	Fringes
CARPENTER		
CARPENTER, PILEDRIVER	$ 30.45	21.65
DIVER TENDER	$ 30.45	21.65
DIVER	$ 38.91	21.65
MILLWRIGHT	$ 30.78	22.15

ELEC0003-004 05/02/2013

Darien, Greenwich, New Canaan, Stamford and the portion of Norwalk lying West of Five Mile River

	Rates	Fringes
ELECTRICIAN	$ 50.75	39.65

ELEC0488-006 06/01/2013

Bethel, Bridgeport, Brookfield, Danbury, Easton, Fairfield, Monroe, New Fairfield, Newtown, Norwalk, Redding, Ridgefield, Shelton, Sherman, Stratford, Trumball, Weston, Westport and Wilton Townships

	Rates	Fringes
ELECTRICIAN	$ 36.52	24.10

ENGI0478-001 04/07/2013

	Rates	Fringes

Power equipment operators:

GROUP 1	$ 36.05	21.55
GROUP 2	$ 35.73	21.55
GROUP 3	$ 34.99	21.55
GROUP 4	$ 34.60	21.55
GROUP 5	$ 34.01	21.55
GROUP 6	$ 33.70	21.55
GROUP 7	$ 33.36	21.55
GROUP 8	$ 32.96	21.55
GROUP 9	$ 32.53	21.55
GROUP 10	$ 30.49	21.55
GROUP 11	$ 30.49	21.55
GROUP 12	$ 30.43	21.55
GROUP 13	$ 31.96	21.55
GROUP 14	$ 29.85	21.55
GROUP 15	$ 29.54	21.55
GROUP 16	$ 28.71	21.55
GROUP 17	$ 28.30	21.55
GROUP 18	$ 27.65	21.55

Hazardous waste premium $3.00 per hour over classified rate.

Crane with boom, including jib, 150 feet - $1.50 extra.
Crane with boom, including jib, 200 feet - $2.50 extra.
Crane with boom, including jib, 250 feet - $5.00 extra.
Crane with boom, including jib, 300 feet - $7.00 extra.
Crane with boom, including jib, 400 feet - $10.00 extra

a. PAID HOLIDAYS: New Year's Day, Good Friday, Memorial Day, Independence Day, Labor Day, Thanksgiving Day and Christmas Day, provided the employee works 3 days during the week in which the holiday falls, if scheduled, and if scheduled, the working day before and the working day after the holiday.

POWER EQUIPMENT OPERATORS CLASSIFICATIONS

GROUP 1: Crane handling or erecting structural steel or stone, hoisting engineer (2 drums or over), front end loader (7 cubic yards or over), work boat 26 ft. and over.

GROUP 2: Cranes (100 ton capacity & over), Excavator over 2 cubic yards, piledriver ($3.00 premium when operator controls hammer).

GROUP 3: Excavator, cranes (under 100 ton rated capacity), gradall, master mechanic, hoisting engineer (all types of equipment where a drum and cable are used to hoist or drag material regardless of motive power or operation) Rubber Tire Excavator (drott 1085 or similar); Grader Operator; Bulldozer Fine Grade (slopes, shaping, laser or GPS, etc.)

GROUP 4: Trenching machines, lighter derrick, concrete finishing machine, CMI machine or similar, Koehring Loader (skooper).

GROUP 5: Specialty railroad equipment, asphalt spreader, asphalt reclaiming machine, line grider, concrete pumps, drills with self contained power units, boring machine, post hole digger, auger, pounder, well digger, milling machine (over 24' mandrel), side boom, combination hoe and loader, directional driller.

GROUP 6: Front end loader (3 cu. yds. up to 7 cu. yards), bulldozer (Rough grade dozer) .

GROUP 7: Asphalt roller, concrete saws and cutters (ride on types), Vermeer concrete cutter, stump grinder, scraper, snooper, skidder, milling machine (24" and under Mandrel).

GROUP 8: Mechanic, grease truck operator, hydoblaster, barrier mover, power stone spreader, welder, work boat under 26 ft. transfer machine.

GROUP 9: Front end loader (under 3 cubic yards), skid steer loader (regardless of attachments), bobcat or similar, forklift, power chipper, landscape equipment (including hydroseeder).

GROUP 10: Vibratory hammer,ice machine, diesel & air, hammer, etc.

GROUP 11: Conveyor, earth roller, power pavement breaker (whiphammer), robot demolition equipment.

GROUP 12: Wellpoint operator.

GROUP 13: Portable asphalt plant operator, portable concrete plant operator, portable crusher plant operator.

GROUP 14: Compressor battery operator.

GROUP 15: Power Safety boat, Vacuum truck, Zim mixer, Sweeper; (Minimum for any job requiring a CDL license) .

GROUP 16: Elevator operator, tow motor operator (solid tire no rough terrain).

GROUP 17: Generator operator, compressor operator, pump operator,welding machine operator; Heater operator.

GROUP 18: Maintenance engineer.

ENGI0478-007 04/07/2013

	Rates	Fringes
POWER EQUIPMENT OPERATOR:		
Asphalt Paver	$ 34.01	21.55
Asphalt Roller	$ 33.36	21.55
Asphalt Spreader	$ 34.01	21.55
Backhoe/Excavator 2 cubic yards and over	$ 35.73	21.55
Backhoe/Excavator under 2 cubic yards	$ 34.99	21.55
Bulldozer (Rough Grade Dozer)	$ 33.70	21.55
Bulldozer Fine Grade(includes slopes, shaping, laser or gps)	$ 34.99	21.55
Crane handling or erecting structural steel or stone	$ 36.05	21.55
Cranes (100 ton capacity & over)	$ 35.73	21.55

Cranes (under 100 ton rated capacity)	$ 34.99	21.55
Drills with self contained power units; Directional driller	$ 34.01	21.55
Earth Roller	$ 30.49	21.55
Forklift	$ 32.53	21.55
Front End Loader (3 cubic yards up to 7 cubic yards)	$ 33.70	21.55
Front End Loader (7 cubic yards or over)	$ 36.05	21.55
Front End Loader (under 3 cubic yards)	$ 32.53	21.55
Grader/Blade	$ 34.99	21.55
Maintenance Engineer/Oiler	$ 27.65	21.55
Mechanic	$ 32.96	21.55
Rubber Tire Backhoe/Excavator	$ 34.99	21.55

a. PAID HOLIDAYS: New Year's Day, Good Friday, Memorial Day, Independence Day, Labor Day, Thanksgiving Day and Christmas Day, provided the employee works 3 days during the week in which the holiday falls, if scheduled, and if scheduled, the working day before and the working day after the holiday.

b. Crane with boom, including jib, 150 feet - $1.50 extra .
Crane with boom, including jib, 200 feet- $2.50 extra.
Crane with boom, including jib, 250 feet - $5.00 extra.
Crane with boom, including jib, 300 feet - $7.00 extra.
Crane with boom, including jib, 400 feet - $10.00 extra.

IRON0015-005 07/01/2013

	Rates	Fringes
IRONWORKER, REINFORCING	$ 33.50	28.98

a. PAID HOLIDAY: Labor Day provided employee has been on the payroll for the 5 consecutive work days prior to Labor Day.

LABO0056-004 04/07/2013

	Rates	Fringes
Laborers: (TUNNEL CONSTRUCTION)		
CLEANING, CONCRETE AND CAULKING TUNNEL:		
Concrete Workers, Form Movers and Strippers	$ 30.37	16.89
Form Erectors	$ 30.68	16.89
ROCK SHAFT, CONCRETE, LINING OF SAME AND TUNNEL IN FREE AIR:		
Brakemen, Trackmen, Tunnel Laborers, Shaft Laborers	$ 30.37	16.89
Laborers Topside, Cage Tenders, Bellman	$ 30.26	16.89
Miners	$ 31.28	16.89

SHIELD DRIVE AND LINER
PLATE TUNNELS IN FREE AIR:
Brakemen and Trackmen.....$ 30.37 16.89
Miners, Motormen, Mucking
Machine Operators,
Nozzlemen, Grout Men,
Shaft and Tunnel, Steel
and Rodmen, Shield and
Erector, Arm Operator,
Cable Tenders.....$ 31.28 16.89
TUNNELS, CAISSON AND
CYLINDER WORK IN
COMPRESSED AIR:
Blaster.....$ 37.41 16.89
Brakemen, Trackmen,
Groutman, Laborers,
Outside Lock Tender,
Gauge Tenders.....$ 37.22 16.89
Change House Attendants,
Powder Watchmen, Top on
Iron Bolts.....$ 35.35 16.89
Mucking Machine Operator...$ 37.97 16.89

a. PAID HOLIDAYS: On tunnel work only: New Year's Day, Memorial Day, Independence Day, Labor Day, Thanksgiving Day and Christmas Day.

No employee shall be eligible for holiday pay when he fails, without cause, to work the regular work day preceding the holiday or the regular work day following the holiday.

LABO0056-005 04/07/2013

	Rates	Fringes
LABORERS		
GROUP 1	$ 26.40	17.15
GROUP 2	$ 26.65	17.15
GROUP 3	$ 26.90	17.15
GROUP 4	$ 27.40	17.15
GROUP 5	$ 28.15	17.15
GROUP 6	$ 28.40	17.15
GROUP 7	$ 16.00	17.15

LABORERS CLASSIFICATIONS

GROUP 1: Laborers (Unskilled), acetylene burner, concrete specialist

GROUP 2: Chain saw operators, fence and guard rail erectors, pneumatic tool operators and powdermen.

GROUP 3: Pipelayers, Jackhammer/Pavement breaker (handheld), mason
tenders/catch basin builders, asphalt rakers, air track operators, block paver and curb setter

GROUP 4: Asbestos/lead removal

GROUP 5: Blasters

GROUP 6: Toxic waste remover

GROUP 7: Traffic control signalman

PAIN0011-013 06/01/2013

	Rates	Fringes
PAINTER		
Brush and Roller	$ 30.62	17.75
Spray Only	$ 33.62	17.75
Steel Only	$ 32.62	17.75

TEAM0064-001 04/07/2013

	Rates	Fringes
Truck drivers:		
2 Axle Ready Mix	$ 27.98	18.27
2 Axle	$ 27.88	18.27
3 Axle Ready Mix	$ 28.03	18.27
3 Axle	$ 27.98	18.27
4 Axle Ready Mix	$ 28.13	18.27
4 Axle	$ 28.08	18.27
Heavy Duty Trailer 40 tons and over	$ 28.33	18.27
Heavy Duty Trailer up to 40 tons	$ 28.08	18.27
Specialized (Earth moving equipment other than conventional type on-the-road trucks and semi-trailers, including Euclids)	$ 28.13	18.27

Hazardous waste removal work receives additional $1.25 per hour.

a. PAID HOLIDAYS: New Year's Day, Memorial Day, Independence Day, Labor Day, Thanksgiving Day, Christmas Day and Good Friday, provided the employee has at least 31 calendar days of service and works the last scheduled day before and the first scheduled day after the holiday, unless excused.

TEAM0064-006 04/07/2013

	Rates	Fringes
TRUCK DRIVER: 4 Axle Truck	$ 28.08	18.27

Hazardous waste removal work receives additional $1.25 per hour.

a. PAID HOLIDAYS: New Year's Day, Memorial Day, Independence Day, Labor Day, Thanksgiving Day, Christmas Day and Good Friday, provided the employee has at least 31 calendar days of service and works the last scheduled day before and the first scheduled day after the holiday, unless excused.

SUCT2002-008 12/16/2008

	Rates	Fringes
IRONWORKER, STRUCTURAL.....	$ 28.62	10.84

WELDERS - Receive rate prescribed for craft performing operation to which welding is incidental.

==========

Unlisted classifications needed for work not included within the scope of the classifications listed may be added after award only as provided in the labor standards contract clauses (29CFR 5.5 (a) (1) (ii)).

The body of each wage determination lists the classification and wage rates that have been found to be prevailing for the cited type(s) of construction in the area covered by the wage determination. The classifications are listed in alphabetical order of "identifiers" that indicate whether the particular rate is union or non-union.

Union Identifiers

An identifier enclosed in dotted lines beginning with characters other than "SU" denotes that the union classification and rate have found to be prevailing for that classification. Example: PLUM0198-005 07/01/2011. The first four letters , PLUM, indicate the international union and the four-digit number, 0198, that follows indicates the local union number or district council number where applicable , i.e., Plumbers Local 0198. The next number, 005 in the example, is an internal number used in processing the wage determination. The date, 07/01/2011, following these characters is the effective date of the most current negotiated rate/collective bargaining agreement which would be July 1, 2011 in the above example.

Union prevailing wage rates will be updated to reflect any changes in the collective bargaining agreements governing the rates.

0000/9999: weighted union wage rates will be published annually each January.

Non-Union Identifiers

Classifications listed under an "SU" identifier were derived from survey data by computing average rates and are not union rates; however, the data used in computing these rates may include both union and non-union data. Example: SULA2004-007 5/13/2010. SU indicates the rates are not union majority rates, LA indicates the State of Louisiana; 2004 is the year of the survey; and 007 is an internal number used in producing the wage determination. A 1993 or later date, 5/13/2010, indicates

the classifications and rates under that identifier were issued as a General Wage Determination on that date.

Survey wage rates will remain in effect and will not change until a new survey is conducted.

WAGE DETERMINATION APPEALS PROCESS

1.) Has there been an initial decision in the matter? This can be:

* an existing published wage determination
* a survey underlying a wage determination
* a Wage and Hour Division letter setting forth a position on a wage determination matter
* a conformance (additional classification and rate) ruling

On survey related matters, initial contact, including requests for summaries of surveys, should be with the Wage and Hour Regional Office for the area in which the survey was conducted because those Regional Offices have responsibility for the Davis-Bacon survey program. If the response from this initial contact is not satisfactory, then the process described in 2.) and 3.) should be followed.

With regard to any other matter not yet ripe for the formal process described here, initial contact should be with the Branch of Construction Wage Determinations. Write to:

Branch of Construction Wage Determinations
Wage and Hour Division
U.S. Department of Labor
200 Constitution Avenue, N.W.
Washington, DC 20210

2.) If the answer to the question in 1.) is yes, then an interested party (those affected by the action) can request review and reconsideration from the Wage and Hour Administrator (See 29 CFR Part 1.8 and 29 CFR Part 7). Write to:

Wage and Hour Administrator
U.S. Department of Labor
200 Constitution Avenue, N.W.
Washington, DC 20210

The request should be accompanied by a full statement of the interested party's position and by any information (wage payment data, project description, area practice material, etc.) that the requestor considers relevant to the issue.

3.) If the decision of the Administrator is not favorable, an interested party may appeal directly to the Administrative Review Board (formerly the Wage Appeals Board). Write to:

Administrative Review Board
U.S. Department of Labor
200 Constitution Avenue, N.W.
Washington, DC 20210

4.) All decisions by the Administrative Review Board are final.

==========

END OF GENERAL DECISION

General Decision Number: CT140014 01/31/2014 CT14

Superseded General Decision Number: CT20130014

State: Connecticut

Construction Type: Heavy

County: Hartford County in Connecticut.

HEAVY CONSTRUCTION PROJECTS

Modification Number	Publication Date
0	01/03/2014
1	01/31/2014

* BRCT0001-012 12/30/2013

	Rates	Fringes
CEMENT MASON/CONCRETE FINISHER	$ 32.50	27.06

CARP0024-014 05/06/2013

Berlin, Bristol, Burlington, Canton, Marlborough, New Britain, Newington, Plainville and Southington

	Rates	Fringes
CARPENTER		
CARPENTERS, PILEDRIVERS	$ 30.45	21.65
DIVER TENDER	$ 30.45	21.65
DIVER	$ 38.91	21.65
MILLWRIGHTS	$ 30.78	22.15

CARP0043-005 05/06/2013

Avon, Bloomfield, East Branby, East Hartfod, East Windsor, Enfield, Farmington, Glastonbury, Granby, Hartford, Hartland, Manchester, Rocky Hill, Simsbury, South Windsor, Suffield, West Hartford, Wethersfield, Windsor, Windsor Locks

	Rates	Fringes
CARPENTER		
CARPENTER, PILEDRIVER	$ 30.45	21.65
DIVER TENDER	$ 30.45	21.65
DIVER	$ 38.91	21.65
MILLWRIGHT	$ 30.78	22.15

ELEC0035-006 06/01/2013

Entire County excluding Berlin, Bristol, Hartland, New Britain, Newington, Plainville and Southington Townships

	Rates	Fringes
ELECTRICIAN	$ 37.60	23.35

ELEC0090-005 06/01/2013

Berlin, Bristol, New Britain, Newington, Plainville,
Southington Townships

	Rates	Fringes
ELECTRICIAN	$ 36.75	23.67

ELEC0488-005 06/01/2013

Hartland Township

	Rates	Fringes
ELECTRICIAN	$ 36.52	24.10

ENGI0478-001 04/07/2013

	Rates	Fringes
Power equipment operators:		
GROUP 1	$ 36.05	21.55
GROUP 2	$ 35.73	21.55
GROUP 3	$ 34.99	21.55
GROUP 4	$ 34.60	21.55
GROUP 5	$ 34.01	21.55
GROUP 6	$ 33.70	21.55
GROUP 7	$ 33.36	21.55
GROUP 8	$ 32.96	21.55
GROUP 9	$ 32.53	21.55
GROUP 10	$ 30.49	21.55
GROUP 11	$ 30.49	21.55
GROUP 12	$ 30.43	21.55
GROUP 13	$ 31.96	21.55
GROUP 14	$ 29.85	21.55
GROUP 15	$ 29.54	21.55
GROUP 16	$ 28.71	21.55
GROUP 17	$ 28.30	21.55
GROUP 18	$ 27.65	21.55

Hazardous waste premium $3.00 per hour over classified rate.

Crane with boom, including jib, 150 feet - $1.50 extra.
Crane with boom, including jib, 200 feet - $2.50 extra.
Crane with boom, including jib, 250 feet - $5.00 extra.
Crane with boom, including jib, 300 feet - $7.00 extra.
Crane with boom, including jib, 400 feet - $10.00 extra

a. PAID HOLIDAYS: New Year's Day, Good Friday, Memorial Day, Independence Day, Labor Day, Thanksgiving Day and Christmas Day, provided the employee works 3 days during the week in which the holiday falls, if scheduled, and if scheduled, the working day before and the working day after the holiday.

POWER EQUIPMENT OPERATORS CLASSIFICATIONS

GROUP 1: Crane handling or erecting structural steel or stone, hoisting engineer (2 drums or over), front end loader (7 cubic yards or over), work boat 26 ft. and over.

GROUP 2: Cranes (100 ton capacity & over), Excavator over 2

cubic yards, piledriver ($3.00 premium when operator controls hammer).

GROUP 3: Excavator, cranes (under 100 ton rated capacity), gradall, master mechanic, hoisting engineer (all types of equipment where a drum and cable are used to hoist or drag material regardless of motive power or operation) Rubber Tire Excavator (drott 1085 or similar); Grader Operator; Bulldozer Fine Grade (slopes, shaping, laser or GPS, etc.)

GROUP 4: Trenching machines, lighter derrick, concrete finishing machine, CMI machine or similar, Koehring Loader (skooper).

GROUP 5: Specialty railroad equipment, asphalt spreader, asphalt reclaiming machine, line grider, concrete pumps, drills with self contained power units, boring machine, post hole digger, auger, pounder, well digger, milling machine (over 24' mandrel), side boom, combination hoe and loader, directional driller.

GROUP 6: Front end loader (3 cu. yds. up to 7 cu. yards), bulldozer (Rough grade dozer) .

GROUP 7: Asphalt roller, concrete saws and cutters (ride on types), Vermeer concrete cutter, stump grinder, scraper, snooper, skidder, milling machine (24" and under Mandrel).

GROUP 8: Mechanic, grease truck operator, hydoblaster, barrier mover, power stone spreader, welder, work boat under 26 ft. transfer machine.

GROUP 9: Front end loader (under 3 cubic yards), skid steer loader (regardless of attachments), bobcat or similar, forklift, power chipper, landscape equipment (including hydroseeder).

GROUP 10: Vibratory hammer,ice machine, diesel & air, hammer, etc.

GROUP 11: Conveyor, earth roller, power pavement breaker (whiphammer), robot demolition equipment.

GROUP 12: Wellpoint operator.

GROUP 13: Portable asphalt plant operator, portable concrete plant operator, portable crusher plant operator.

GROUP 14: Compressor battery operator.

GROUP 15: Power Safety boat, Vacuum truck, Zim mixer, Sweeper; (Minimum for any job requiring a CDL license) .

GROUP 16: Elevator operator, tow motor operator (solid tire no rough terrain).

GROUP 17: Generator operator, compressor operator, pump operator,welding machine operator; Heater operator.

GROUP 18: Maintenance engineer.

	Rates	Fringes
POWER EQUIPMENT OPERATOR:		
Asphalt Paver	$ 34.01	21.55
Asphalt Roller	$ 33.36	21.55
Asphalt Spreader	$ 34.01	21.55
Bulldozer (Rough Grade Dozer)	$ 33.70	21.55
Bulldozer Fine Grade(includes slopes, shaping, laser or gps)	$ 34.99	21.55
Crane handling or erecting structural steel or stone	$ 36.05	21.55
Cranes (100 ton capacity & over)	$ 35.73	21.55
Cranes (under 100 ton rated capacity)	$ 34.99	21.55
Drills with self contained power units; Directional driller	$ 34.01	21.55
Earth Roller	$ 30.49	21.55
Excavator/Backhoe 2 cubic yards and over	$ 35.73	21.55
Excavator/Backhoe under 2 cubic yards	$ 34.99	21.55
Forklift	$ 32.53	21.55
Front End Loader (3 cubic yards up to 7 cubic yards)	$ 33.70	21.55
Front End Loader (7 cubic yards or over)	$ 36.05	21.55
Front End Loader (under 3 cubic yards)	$ 32.53	21.55
Grader/Blade	$ 34.99	21.55
Maintenance Engineer/Oiler	$ 27.65	21.55
Mechanic	$ 32.96	21.55

a. PAID HOLIDAYS: New Year's Day, Good Friday, Memorial Day, Independence Day, Labor Day, Thanksgiving Day and Christmas Day, provided the employee works 3 days during the week in which the holiday falls, if scheduled, and if scheduled, the working day before and the working day after the holiday.

b. Crane with boom, including jib, 150 feet - $1.50 extra .
Crane with boom, including jib, 200 feet- $2.50 extra.
Crane with boom, including jib, 250 feet - $5.00 extra.
Crane with boom, including jib, 300 feet - $7.00 extra.
Crane with boom, including jib, 400 feet - $10.00 extra.

IRON0015-007 07/01/2013

	Rates	Fringes
IRONWORKER, STRUCTURAL	$ 33.50	28.98

a. PAID HOLIDAY: Labor Day provided employee has been on the payroll for the 5 consecutive work days prior to Labor Day.

LABO0056-004 04/07/2013

	Rates	Fringes
Laborers: (TUNNEL CONSTRUCTION)		
CLEANING, CONCRETE AND CAULKING TUNNEL:		
Concrete Workers, Form Movers and Strippers	$ 30.37	16.89
Form Erectors	$ 30.68	16.89
ROCK SHAFT, CONCRETE, LINING OF SAME AND TUNNEL IN FREE AIR:		
Brakemen, Trackmen, Tunnel Laborers, Shaft Laborers	$ 30.37	16.89
Laborers Topside, Cage Tenders, Bellman	$ 30.26	16.89
Miners	$ 31.28	16.89
SHIELD DRIVE AND LINER PLATE TUNNELS IN FREE AIR:		
Brakemen and Trackmen	$ 30.37	16.89
Miners, Motormen, Mucking Machine Operators, Nozzlemen, Grout Men, Shaft and Tunnel, Steel and Rodmen, Shield and Erector, Arm Operator, Cable Tenders	$ 31.28	16.89
TUNNELS, CAISSON AND CYLINDER WORK IN COMPRESSED AIR:		
Blaster	$ 37.41	16.89
Brakemen, Trackmen, Groutman, Laborers, Outside Lock Tender, Gauge Tenders	$ 37.22	16.89
Change House Attendants, Powder Watchmen, Top on Iron Bolts	$ 35.35	16.89
Mucking Machine Operator	$ 37.97	16.89

a. PAID HOLIDAYS: On tunnel work only: New Year's Day, Memorial Day, Independence Day, Labor Day, Thanksgiving Day and Christmas Day.

No employee shall be eligible for holiday pay when he fails, without cause, to work the regular work day preceding the holiday or the regular work day following the holiday.

LABO0056-006 04/07/2013

	Rates	Fringes
LABORERS		
GROUP 1	$ 26.40	17.15
GROUP 2	$ 26.65	17.15
GROUP 3	$ 26.90	17.15
GROUP 4	$ 27.40	17.15
GROUP 5	$ 28.15	17.15
GROUP 6	$ 28.40	17.15
GROUP 7	$ 16.00	17.15

LABORERS CLASSIFICATIONS

GROUP 1: Laborers (Unskilled), acetylene burner, concrete specialist

GROUP 2: Chain saw operators, fence and guard rail erectors, pneumatic tool operators and powdermen.

GROUP 3: Pipelayers, Jackhammer/Pavement breaker (handheld), mason tenders/catch basin builders, asphalt rakers, air track operators, block paver and curb setter

GROUP 4: Asbestos/lead removal

GROUP 5: Blasters

GROUP 6: Toxic waste remover

GROUP 7: Traffic control signalman

PAIN0011-013 06/01/2013

	Rates	Fringes
PAINTER		
Brush and Roller	$ 30.62	17.75
Spray Only	$ 33.62	17.75
Steel Only	$ 32.62	17.75

TEAM0064-001 04/07/2013

	Rates	Fringes
Truck drivers:		
2 Axle Ready Mix	$ 27.98	18.27
2 Axle	$ 27.88	18.27
3 Axle Ready Mix	$ 28.03	18.27
3 Axle	$ 27.98	18.27
4 Axle Ready Mix	$ 28.13	18.27
4 Axle	$ 28.08	18.27
Heavy Duty Trailer 40 tons and over	$ 28.33	18.27
Heavy Duty Trailer up to 40 tons	$ 28.08	18.27
Specialized (Earth moving equipment other than conventional type on-the-road trucks and semi-trailers, including Euclids)	$ 28.13	18.27

Hazardous waste removal work receives additional $1.25 per hour.

a. PAID HOLIDAYS: New Year's Day, Memorial Day, Independence Day, Labor Day, Thanksgiving Day, Christmas Day and Good Friday, provided the employee has at least 31 calendar days of service and works the last scheduled day before and the first scheduled day after the holiday, unless excused.

TEAM0064-006 04/07/2013

	Rates	Fringes
TRUCK DRIVER: 4 Axle Truck.....	$ 28.08	18.27

Hazardous waste removal work receives additional $1.25 per hour.

a. PAID HOLIDAYS: New Year's Day, Memorial Day, Independence Day, Labor Day, Thanksgiving Day, Christmas Day and Good Friday, provided the employee has at least 31 calendar days of service and works the last scheduled day before and the first scheduled day after the holiday, unless excused.

SUCT2002-009 12/16/2008

	Rates	Fringes
IRONWORKER, REINFORCING.....	$ 27.13	13.57
LABORER: Common or General.....	$ 21.03	5.30
OPERATOR: Excavator.....	$ 27.77	7.60
TRUCK DRIVER: 3 Axle & Semi - Truck.....	$ 19.93	7.39

WELDERS - Receive rate prescribed for craft performing operation to which welding is incidental.

==========

Unlisted classifications needed for work not included within the scope of the classifications listed may be added after award only as provided in the labor standards contract clauses (29CFR 5.5 (a) (1) (ii)).

The body of each wage determination lists the classification and wage rates that have been found to be prevailing for the cited type(s) of construction in the area covered by the wage determination. The classifications are listed in alphabetical order of "identifiers" that indicate whether the particular rate is union or non-union.

Union Identifiers

An identifier enclosed in dotted lines beginning with characters other than "SU" denotes that the union classification and rate have found to be prevailing for that classification. Example: PLUM0198-005 07/01/2011. The first four letters , PLUM, indicate the international union and the four-digit number, 0198, that follows indicates the local union number or district council number where applicable , i.e., Plumbers Local 0198. The next number, 005 in the example, is

an internal number used in processing the wage determination. The date, 07/01/2011, following these characters is the effective date of the most current negotiated rate/collective bargaining agreement which would be July 1, 2011 in the above example.

Union prevailing wage rates will be updated to reflect any changes in the collective bargaining agreements governing the rates.

0000/9999: weighted union wage rates will be published annually each January.

Non-Union Identifiers

Classifications listed under an "SU" identifier were derived from survey data by computing average rates and are not union rates; however, the data used in computing these rates may include both union and non-union data. Example: SULA2004-007 5/13/2010. SU indicates the rates are not union majority rates, LA indicates the State of Louisiana; 2004 is the year of the survey; and 007 is an internal number used in producing the wage determination. A 1993 or later date, 5/13/2010, indicates the classifications and rates under that identifier were issued as a General Wage Determination on that date.

Survey wage rates will remain in effect and will not change until a new survey is conducted.

WAGE DETERMINATION APPEALS PROCESS

1.) Has there been an initial decision in the matter? This can be:

* an existing published wage determination
* a survey underlying a wage determination
* a Wage and Hour Division letter setting forth a position on a wage determination matter
* a conformance (additional classification and rate) ruling

On survey related matters, initial contact, including requests for summaries of surveys, should be with the Wage and Hour Regional Office for the area in which the survey was conducted because those Regional Offices have responsibility for the Davis-Bacon survey program. If the response from this initial contact is not satisfactory, then the process described in 2.) and 3.) should be followed.

With regard to any other matter not yet ripe for the formal process described here, initial contact should be with the Branch of Construction Wage Determinations. Write to:

Branch of Construction Wage Determinations
Wage and Hour Division
U.S. Department of Labor
200 Constitution Avenue, N.W.
Washington, DC 20210

2.) If the answer to the question in 1.) is yes, then an interested party (those affected by the action) can request review and reconsideration from the Wage and Hour Administrator (See 29 CFR Part 1.8 and 29 CFR Part 7). Write to:

Wage and Hour Administrator
U.S. Department of Labor
200 Constitution Avenue, N.W.
Washington, DC 20210

The request should be accompanied by a full statement of the interested party's position and by any information (wage payment data, project description, area practice material, etc.) that the requestor considers relevant to the issue.

3.) If the decision of the Administrator is not favorable, an interested party may appeal directly to the Administrative Review Board (formerly the Wage Appeals Board). Write to:

Administrative Review Board
U.S. Department of Labor
200 Constitution Avenue, N.W.
Washington, DC 20210

4.) All decisions by the Administrative Review Board are final.

==========

END OF GENERAL DECISION

General Decision Number: CT140015 01/31/2014 CT15

Superseded General Decision Number: CT20130015

State: Connecticut

Construction Type: Heavy

Counties: Middlesex and Tolland Counties in Connecticut.

HEAVY CONSTRUCTION PROJECTS

Modification Number	Publication Date
0	01/03/2014
1	01/31/2014

* BRCT0001-011 12/30/2013

	Rates	Fringes
BRICKLAYER	$ 32.50	27.06

---

* BRCT0001-012 12/30/2013

	Rates	Fringes
CEMENT MASON/CONCRETE FINISHER	$ 32.50	27.06

CARP0024-016 05/06/2013

MIDDLESEX COUNTY
TOLLAND COUNTY
Andover, Columbia, Coventry, Hebron, Mansfield, Union, Willington

	Rates	Fringes
CARPENTER		
CARPENTERS, PILEDRIVERS	$ 30.45	21.65
DIVER TENDER	$ 30.45	21.65
DIVER	$ 38.91	21.65
MILLWRIGHT	$ 30.78	22.15

CARP0043-006 05/06/2013

TOLLAND COUNTY
Bolton, Ellington, Somers, Tolland, Vernon

	Rates	Fringes
CARPENTER		
CARPENTER, PILEDRIVER	$ 30.45	21.65
DIVER TENDER	$ 30.45	21.65
DIVER	$ 38.91	21.65
MILLWRIGHT	$ 30.78	22.15

ELEC0035-004 06/01/2013

Cromwell, Middlefield, Middleton and Portland

	Rates	Fringes

ELECTRICIAN.....$ 37.60 23.35

ELEC0090-006 06/01/2013

Chester, Clinton, Deep River, Durham, East Haddam, East Hampton, Essex, Haddam, Killingsworth, Old Saybrook, Westbrook

	Rates	Fringes
ELECTRICIAN	$ 36.75	23.67

ENGI0478-001 04/07/2013

	Rates	Fringes
Power equipment operators:		
GROUP 1	$ 36.05	21.55
GROUP 2	$ 35.73	21.55
GROUP 3	$ 34.99	21.55
GROUP 4	$ 34.60	21.55
GROUP 5	$ 34.01	21.55
GROUP 6	$ 33.70	21.55
GROUP 7	$ 33.36	21.55
GROUP 8	$ 32.96	21.55
GROUP 9	$ 32.53	21.55
GROUP 10	$ 30.49	21.55
GROUP 11	$ 30.49	21.55
GROUP 12	$ 30.43	21.55
GROUP 13	$ 31.96	21.55
GROUP 14	$ 29.85	21.55
GROUP 15	$ 29.54	21.55
GROUP 16	$ 28.71	21.55
GROUP 17	$ 28.30	21.55
GROUP 18	$ 27.65	21.55

Hazardous waste premium $3.00 per hour over classified rate.

Crane with boom, including jib, 150 feet - $1.50 extra.
Crane with boom, including jib, 200 feet - $2.50 extra.
Crane with boom, including jib, 250 feet - $5.00 extra.
Crane with boom, including jib, 300 feet - $7.00 extra.
Crane with boom, including jib, 400 feet - $10.00 extra

a. PAID HOLIDAYS: New Year's Day, Good Friday, Memorial Day, Independence Day, Labor Day, Thanksgiving Day and Christmas Day, provided the employee works 3 days during the week in which the holiday falls, if scheduled, and if scheduled, the working day before and the working day after the holiday.

POWER EQUIPMENT OPERATORS CLASSIFICATIONS

GROUP 1: Crane handling or erecting structural steel or stone, hoisting engineer (2 drums or over), front end loader (7 cubic yards or over), work boat 26 ft. and over.

GROUP 2: Cranes (100 ton capacity & over), Excavator over 2 cubic yards, piledriver ($3.00 premium when operator controls hammer).

GROUP 3: Excavator, cranes (under 100 ton rated capacity),

gradall, master mechanic, hoisting engineer (all types of equipment where a drum and cable are used to hoist or drag material regardless of motive power or operation) Rubber Tire Excavator (drott 1085 or similar); Grader Operator; Bulldozer Fine Grade (slopes, shaping, laser or GPS, etc.)

GROUP 4: Trenching machines, lighter derrick, concrete finishing machine, CMI machine or similar, Koehring Loader (skooper).

GROUP 5: Specialty railroad equipment, asphalt spreader, asphalt reclaiming machine, line grider, concrete pumps, drills with self contained power units, boring machine, post hole digger, auger, pounder, well digger, milling machine (over 24' mandrel), side boom, combination hoe and loader, directional driller.

GROUP 6: Front end loader (3 cu. yds. up to 7 cu. yards), bulldozer (Rough grade dozer) .

GROUP 7: Asphalt roller, concrete saws and cutters (ride on types), Vermeer concrete cutter, stump grinder, scraper, snooper, skidder, milling machine (24" and under Mandrel).

GROUP 8: Mechanic, grease truck operator, hydoblaster, barrier mover, power stone spreader, welder, work boat under 26 ft. transfer machine.

GROUP 9: Front end loader (under 3 cubic yards), skid steer loader (regardless of attachments), bobcat or similar, forklift, power chipper, landscape equipment (including hydroseeder).

GROUP 10: Vibratory hammer,ice machine, diesel & air, hammer, etc.

GROUP 11: Conveyor, earth roller, power pavement breaker (whiphammer), robot demolition equipment.

GROUP 12: Wellpoint operator.

GROUP 13: Portable asphalt plant operator, portable concrete plant operator, portable crusher plant operator.

GROUP 14: Compressor battery operator.

GROUP 15: Power Safety boat, Vacuum truck, Zim mixer, Sweeper; (Minimum for any job requiring a CDL license) .

GROUP 16: Elevator operator, tow motor operator (solid tire no rough terrain).

GROUP 17: Generator operator, compressor operator, pump operator,welding machine operator; Heater operator.

GROUP 18: Maintenance engineer.

ENGI0478-007 04/07/2013

	Rates	Fringes
POWER EQUIPMENT OPERATOR:		

Asphalt Paver	$ 34.01	21.55
Asphalt Roller	$ 33.36	21.55
Asphalt Spreader	$ 34.01	21.55
Backhoe/Excavator 2 cubic yards and over	$ 35.73	21.55
Backhoe/Excavator under 2 cubic yards	$ 34.99	21.55
Bulldozer (Rough Grade Dozer)	$ 33.70	21.55
Bulldozer Fine Grade(includes slopes, shaping, laser or gps)	$ 34.99	21.55
Crane handling or erecting structural steel or stone	$ 36.05	21.55
Cranes (100 ton capacity & over)	$ 35.73	21.55
Cranes (under 100 ton rated capacity)	$ 34.99	21.55
Drills with self contained power units; Directional driller	$ 34.01	21.55
Earth Roller	$ 30.49	21.55
Forklift	$ 32.53	21.55
Front End Loader (3 cubic yards up to 7 cubic yards)	$ 33.70	21.55
Front End Loader (7 cubic yards or over)	$ 36.05	21.55
Front End Loader (under 3 cubic yards)	$ 32.53	21.55
Grader/Blade	$ 34.99	21.55
Maintenance Engineer/Oiler	$ 27.65	21.55
Mechanic	$ 32.96	21.55
Rubber Tire Backhoe/Excavator	$ 34.99	21.55

a. PAID HOLIDAYS: New Year's Day, Good Friday, Memorial Day, Independence Day, Labor Day, Thanksgiving Day and Christmas Day, provided the employee works 3 days during the week in which the holiday falls, if scheduled, and if scheduled, the working day before and the working day after the holiday.

b. Crane with boom, including jib, 150 feet - $1.50 extra .
Crane with boom, including jib, 200 feet- $2.50 extra.
Crane with boom, including jib, 250 feet - $5.00 extra.
Crane with boom, including jib, 300 feet - $7.00 extra.
Crane with boom, including jib, 400 feet - $10.00 extra.

IRON0015-008 07/01/2013

	Rates	Fringes
IRONWORKER, REINFORCING AND STRUCTURAL	$ 33.50	28.98

a. PAID HOLIDAY: Labor Day provided employee has been on the payroll for the 5 consecutive work days prior to Labor Day.

LABO0056-004 04/07/2013

	Rates	Fringes

Laborers: (TUNNEL
CONSTRUCTION)

CLEANING, CONCRETE AND CAULKING TUNNEL:		
Concrete Workers, Form Movers and Strippers	$ 30.37	16.89
Form Erectors	$ 30.68	16.89
ROCK SHAFT, CONCRETE, LINING OF SAME AND TUNNEL IN FREE AIR:		
Brakemen, Trackmen, Tunnel Laborers, Shaft Laborers	$ 30.37	16.89
Laborers Topside, Cage Tenders, Bellman	$ 30.26	16.89
Miners	$ 31.28	16.89
SHIELD DRIVE AND LINER PLATE TUNNELS IN FREE AIR:		
Brakemen and Trackmen	$ 30.37	16.89
Miners, Motormen, Mucking Machine Operators, Nozzlemen, Grout Men, Shaft and Tunnel, Steel and Rodmen, Shield and Erector, Arm Operator, Cable Tenders	$ 31.28	16.89
TUNNELS, CAISSON AND CYLINDER WORK IN COMPRESSED AIR:		
Blaster	$ 37.41	16.89
Brakemen, Trackmen, Groutman, Laborers, Outside Lock Tender, Gauge Tenders	$ 37.22	16.89
Change House Attendants, Powder Watchmen, Top on Iron Bolts	$ 35.35	16.89
Mucking Machine Operator	$ 37.97	16.89

a. PAID HOLIDAYS: On tunnel work only: New Year's Day, Memorial Day, Independence Day, Labor Day, Thanksgiving Day and Christmas Day.

No employee shall be eligible for holiday pay when he fails, without cause, to work the regular work day preceding the holiday or the regular work day following the holiday.

LABO0056-007 04/07/2013

	Rates	Fringes
LABORERS		
GROUP 1	$ 26.40	17.15
GROUP 2	$ 26.65	17.15
GROUP 3	$ 26.90	17.15
GROUP 4	$ 27.40	17.15
GROUP 5	$ 28.15	17.15
GROUP 6	$ 28.40	17.15
GROUP 7	$ 16.00	17.15

LABORERS CLASSIFICATIONS

GROUP 1: Laborers (Unskilled), acetylene burner, concrete specialist

GROUP 2: Chain saw operators, fence and guard rail erectors, pneumatic tool operators and powdermen.

GROUP 3: Pipelayers, Jackhammer/Pavement breaker (handheld), mason tenders/catch basin builders, asphalt rakers, air track operators, block paver and curb setter

GROUP 4: Asbestos/lead removal

GROUP 5: Blasters

GROUP 6: Toxic waste remover

GROUP 7: Traffic control signalman

PAIN0011-013 06/01/2013

	Rates	Fringes
PAINTER		
Brush and Roller	$ 30.62	17.75
Spray Only	$ 33.62	17.75
Steel Only	$ 32.62	17.75

TEAM0064-001 04/07/2013

	Rates	Fringes
Truck drivers:		
2 Axle Ready Mix	$ 27.98	18.27
2 Axle	$ 27.88	18.27
3 Axle Ready Mix	$ 28.03	18.27
3 Axle	$ 27.98	18.27
4 Axle Ready Mix	$ 28.13	18.27
4 Axle	$ 28.08	18.27
Heavy Duty Trailer 40 tons and over	$ 28.33	18.27
Heavy Duty Trailer up to 40 tons	$ 28.08	18.27
Specialized (Earth moving equipment other than conventional type on-the-road trucks and semi-trailers, including Euclids)	$ 28.13	18.27

Hazardous waste removal work receives additional $1.25 per hour.

a. PAID HOLIDAYS: New Year's Day, Memorial Day, Independence Day, Labor Day, Thanksgiving Day, Christmas Day and Good Friday, provided the employee has at least 31 calendar days of service and works the last scheduled day before and the first scheduled day after the holiday, unless excused.

TEAM0064-006 04/07/2013

	Rates	Fringes
TRUCK DRIVER: 4 Axle Truck.....	$ 28.08	18.27

Hazardous waste removal work receives additional $1.25 per hour.

a. PAID HOLIDAYS: New Year's Day, Memorial Day, Independence Day, Labor Day, Thanksgiving Day, Christmas Day and Good Friday, provided the employee has at least 31 calendar days of service and works the last scheduled day before and the first scheduled day after the holiday, unless excused.

SUCT2002-010 12/16/2008

	Rates	Fringes
CEMENT MASON/CONCRETE FINISHER...	$ 25.52	8.49
TRUCK DRIVER: 3 Axle & Semi - Truck.....	$ 19.93	7.39

WELDERS - Receive rate prescribed for craft performing operation to which welding is incidental.

==========

Unlisted classifications needed for work not included within the scope of the classifications listed may be added after award only as provided in the labor standards contract clauses (29CFR 5.5 (a) (1) (ii)).

The body of each wage determination lists the classification and wage rates that have been found to be prevailing for the cited type(s) of construction in the area covered by the wage determination. The classifications are listed in alphabetical order of "identifiers" that indicate whether the particular rate is union or non-union.

Union Identifiers

An identifier enclosed in dotted lines beginning with characters other than "SU" denotes that the union classification and rate have found to be prevailing for that classification. Example: PLUM0198-005 07/01/2011. The first four letters , PLUM, indicate the international union and the four-digit number, 0198, that follows indicates the local union number or district council number where applicable , i.e., Plumbers Local 0198. The next number, 005 in the example, is an internal number used in processing the wage determination. The date, 07/01/2011, following these characters is the effective date of the most current negotiated rate/collective bargaining agreement which would be July 1, 2011 in the above example.

Union prevailing wage rates will be updated to reflect any changes in the collective bargaining agreements governing the rates.

0000/9999: weighted union wage rates will be published annually each January.

Non-Union Identifiers

Classifications listed under an "SU" identifier were derived from survey data by computing average rates and are not union rates; however, the data used in computing these rates may include both union and non-union data. Example: SULA2004-007 5/13/2010. SU indicates the rates are not union majority rates, LA indicates the State of Louisiana; 2004 is the year of the survey; and 007 is an internal number used in producing the wage determination. A 1993 or later date, 5/13/2010, indicates the classifications and rates under that identifier were issued as a General Wage Determination on that date.

Survey wage rates will remain in effect and will not change until a new survey is conducted.

WAGE DETERMINATION APPEALS PROCESS

1.) Has there been an initial decision in the matter? This can be:

* an existing published wage determination
* a survey underlying a wage determination
* a Wage and Hour Division letter setting forth a position on a wage determination matter
* a conformance (additional classification and rate) ruling

On survey related matters, initial contact, including requests for summaries of surveys, should be with the Wage and Hour Regional Office for the area in which the survey was conducted because those Regional Offices have responsibility for the Davis-Bacon survey program. If the response from this initial contact is not satisfactory, then the process described in 2.) and 3.) should be followed.

With regard to any other matter not yet ripe for the formal process described here, initial contact should be with the Branch of Construction Wage Determinations. Write to:

Branch of Construction Wage Determinations
Wage and Hour Division
U.S. Department of Labor
200 Constitution Avenue, N.W.
Washington, DC 20210

2.) If the answer to the question in 1.) is yes, then an interested party (those affected by the action) can request review and reconsideration from the Wage and Hour Administrator (See 29 CFR Part 1.8 and 29 CFR Part 7). Write to:

Wage and Hour Administrator
U.S. Department of Labor
200 Constitution Avenue, N.W.
Washington, DC 20210

The request should be accompanied by a full statement of the interested party's position and by any information (wage payment data, project description, area practice material, etc.) that the requestor considers relevant to the issue.

3.) If the decision of the Administrator is not favorable, an interested party may appeal directly to the Administrative Review Board (formerly the Wage Appeals Board). Write to:

Administrative Review Board
U.S. Department of Labor
200 Constitution Avenue, N.W.
Washington, DC 20210

4.) All decisions by the Administrative Review Board are final.

==========

END OF GENERAL DECISION

General Decision Number: CT140016 01/31/2014 CT16

Superseded General Decision Number: CT20130016

State: Connecticut

Construction Type: Heavy

County: New Haven County in Connecticut.

HEAVY CONSTRUCTION PROJECTS

Modification Number	Publication Date
0	01/03/2014
1	01/31/2014

* BRCT0001-011 12/30/2013

	Rates	Fringes
BRICKLAYER	$ 32.50	27.06

---

* BRCT0001-012 12/30/2013

	Rates	Fringes
CEMENT MASON/CONCRETE FINISHER	$ 32.50	27.06

CARP0024-015 05/06/2013

Beacon Falls, Bethany, Branford, Cheshire, East Haven, Guilford, Hamden, Madison, Meriden, Middlebury, Naugatuck, New Haven, North Branford, North Haven, Orange (east of Orange Center Road and north of Route 1, and north of Route 1 and east of the Oyster River), Prospect, Southbury, Wallingford, Waterbury, West Haven, Wolcott, Woodbridge

	Rates	Fringes
CARPENTER		
CARPENTERS, PILEDRIVERS	$ 30.45	21.65
DIVER TENDER	$ 30.45	21.65
DIVER	$ 38.91	21.65
MILLWRIGHTS	$ 30.78	22.15

CARP0210-006 05/06/2013

Ansonia, Derby, Milford, Orange (West of Orange Center Road and South of Route 1 and West of the Oyster River), Oxford, Seymour

	Rates	Fringes
CARPENTER		
CARPENTER, PILEDRIVER	$ 30.45	21.65
DIVER TENDER	$ 30.45	21.65
DIVER	$ 38.91	21.65
MILLWRIGHT	$ 30.78	22.15

ELEC0090-004 06/01/2013

Entire County excluding Beacon Falls, Middlebury, Milford,

Naugatuck, Oxford, Prospect, Seymour, Southbury, Waterbury and Wolcott Townships

	Rates	Fringes
ELECTRICIAN	$ 36.75	23.67

ELEC0488-007 06/01/2013

Beacon Falls, Middlebury, Milford, Naugatuck, Oxford, Prospect, Seymour, Southbury, Waterbury and Wolcott Townships

	Rates	Fringes
ELECTRICIAN	$ 36.52	24.10

ENGI0478-001 04/07/2013

	Rates	Fringes
Power equipment operators:		
GROUP 1	$ 36.05	21.55
GROUP 2	$ 35.73	21.55
GROUP 3	$ 34.99	21.55
GROUP 4	$ 34.60	21.55
GROUP 5	$ 34.01	21.55
GROUP 6	$ 33.70	21.55
GROUP 7	$ 33.36	21.55
GROUP 8	$ 32.96	21.55
GROUP 9	$ 32.53	21.55
GROUP 10	$ 30.49	21.55
GROUP 11	$ 30.49	21.55
GROUP 12	$ 30.43	21.55
GROUP 13	$ 31.96	21.55
GROUP 14	$ 29.85	21.55
GROUP 15	$ 29.54	21.55
GROUP 16	$ 28.71	21.55
GROUP 17	$ 28.30	21.55
GROUP 18	$ 27.65	21.55

Hazardous waste premium $3.00 per hour over classified rate.

Crane with boom, including jib, 150 feet - $1.50 extra.
Crane with boom, including jib, 200 feet - $2.50 extra.
Crane with boom, including jib, 250 feet - $5.00 extra.
Crane with boom, including jib, 300 feet - $7.00 extra.
Crane with boom, including jib, 400 feet - $10.00 extra

a. PAID HOLIDAYS: New Year's Day, Good Friday, Memorial Day, Independence Day, Labor Day, Thanksgiving Day and Christmas Day, provided the employee works 3 days during the week in which the holiday falls, if scheduled, and if scheduled, the working day before and the working day after the holiday.

POWER EQUIPMENT OPERATORS CLASSIFICATIONS

GROUP 1: Crane handling or erecting structural steel or stone, hoisting engineer (2 drums or over), front end loader (7 cubic yards or over), work boat 26 ft. and over.

GROUP 2: Cranes (100 ton capacity & over), Excavator over 2 cubic yards, piledriver ($3.00 premium when operator controls hammer).

GROUP 3: Excavator, cranes (under 100 ton rated capacity), gradall, master mechanic, hoisting engineer (all types of equipment where a drum and cable are used to hoist or drag material regardless of motive power or operation) Rubber Tire Excavator (drott 1085 or similar); Grader Operator; Bulldozer Fine Grade (slopes, shaping, laser or GPS, etc.)

GROUP 4: Trenching machines, lighter derrick, concrete finishing machine, CMI machine or similar, Koehring Loader (skooper).

GROUP 5: Specialty railroad equipment, asphalt spreader, asphalt reclaiming machine, line grider, concrete pumps, drills with self contained power units, boring machine, post hole digger, auger, pounder, well digger, milling machine (over 24' mandrel), side boom, combination hoe and loader, directional driller.

GROUP 6: Front end loader (3 cu. yds. up to 7 cu. yards), bulldozer (Rough grade dozer) .

GROUP 7: Asphalt roller, concrete saws and cutters (ride on types), Vermeer concrete cutter, stump grinder, scraper, snooper, skidder, milling machine (24" and under Mandrel).

GROUP 8: Mechanic, grease truck operator, hydoblaster, barrier mover, power stone spreader, welder, work boat under 26 ft. transfer machine.

GROUP 9: Front end loader (under 3 cubic yards), skid steer loader (regardless of attachments), bobcat or similar, forklift, power chipper, landscape equipment (including hydroseeder).

GROUP 10: Vibratory hammer,ice machine, diesel & air, hammer, etc.

GROUP 11: Conveyor, earth roller, power pavement breaker (whiphammer), robot demolition equipment.

GROUP 12: Wellpoint operator.

GROUP 13: Portable asphalt plant operator, portable concrete plant operator, portable crusher plant operator.

GROUP 14: Compressor battery operator.

GROUP 15: Power Safety boat, Vacuum truck, Zim mixer, Sweeper; (Minimum for any job requiring a CDL license) .

GROUP 16: Elevator operator, tow motor operator (solid tire no rough terrain).

GROUP 17: Generator operator, compressor operator, pump operator,welding machine operator; Heater operator.

GROUP 18: Maintenance engineer.

ENGI0478-011 04/07/2013

	Rates	Fringes
POWER EQUIPMENT OPERATOR:		
Asphalt Paver	$ 34.01	21.55
Asphalt Roller	$ 33.36	21.55
Asphalt Spreader	$ 34.01	21.55
Backhoe/Excavator 2 cubic yards and over	$ 35.73	21.55
Backhoe/Excavator under 2 cubic yards	$ 34.99	21.55
Crane handling or erecting structural steel or stone	$ 36.05	21.55
Cranes (100 ton capacity & over)	$ 35.73	21.55
Cranes (under 100 ton rated capacity)	$ 34.99	21.55
Drills with self contained power units; Directional driller	$ 34.01	21.55
Earth Roller	$ 30.49	21.55
Forklift	$ 32.53	21.55
Front End Loader (3 cubic yards up to 7 cubic yards)	$ 33.70	21.55
Front End Loader (7 cubic yards or over)	$ 36.05	21.55
Front End Loader (under 3 cubic yards)	$ 32.53	21.55
Grader/Blade	$ 34.99	21.55
Maintenance Engineer/Oiler	$ 27.65	21.55
Mechanic	$ 32.96	21.55
Rubber Tire Backhoe/Excavator	$ 34.99	21.55

a. PAID HOLIDAYS: New Year's Day, Good Friday, Memorial Day, Independence Day, Labor Day, Thanksgiving Day and Christmas Day, provided the employee works 3 days during the week in which the holiday falls, if scheduled, and if scheduled, the working day before and the working day after the holiday.

b. Crane with boom, including jib, 150 feet - $1.50 extra .
Crane with boom, including jib, 200 feet- $2.50 extra.
Crane with boom, including jib, 250 feet - $5.00 extra.
Crane with boom, including jib, 300 feet - $7.00 extra.
Crane with boom, including jib, 400 feet - $10.00 extra.

IRON0015-005 07/01/2013

	Rates	Fringes
IRONWORKER, REINFORCING	$ 33.50	28.98

a. PAID HOLIDAY: Labor Day provided employee has been on the payroll for the 5 consecutive work days prior to Labor Day.

LABO0056-004 04/07/2013

	Rates	Fringes

Laborers: (TUNNEL
CONSTRUCTION)

CLEANING, CONCRETE AND CAULKING TUNNEL:		
Concrete Workers, Form Movers and Strippers	$ 30.37	16.89
Form Erectors	$ 30.68	16.89
ROCK SHAFT, CONCRETE, LINING OF SAME AND TUNNEL IN FREE AIR:		
Brakemen, Trackmen, Tunnel Laborers, Shaft Laborers	$ 30.37	16.89
Laborers Topside, Cage Tenders, Bellman	$ 30.26	16.89
Miners	$ 31.28	16.89
SHIELD DRIVE AND LINER PLATE TUNNELS IN FREE AIR:		
Brakemen and Trackmen	$ 30.37	16.89
Miners, Motormen, Mucking Machine Operators, Nozzlemen, Grout Men, Shaft and Tunnel, Steel and Rodmen, Shield and Erector, Arm Operator, Cable Tenders	$ 31.28	16.89
TUNNELS, CAISSON AND CYLINDER WORK IN COMPRESSED AIR:		
Blaster	$ 37.41	16.89
Brakemen, Trackmen, Groutman, Laborers, Outside Lock Tender, Gauge Tenders	$ 37.22	16.89
Change House Attendants, Powder Watchmen, Top on Iron Bolts	$ 35.35	16.89
Mucking Machine Operator	$ 37.97	16.89

a. PAID HOLIDAYS: On tunnel work only: New Year's Day, Memorial Day, Independence Day, Labor Day, Thanksgiving Day and Christmas Day.

No employee shall be eligible for holiday pay when he fails, without cause, to work the regular work day preceding the holiday or the regular work day following the holiday.

LABO0056-005 04/07/2013

	Rates	Fringes
LABORERS		
GROUP 1	$ 26.40	17.15
GROUP 2	$ 26.65	17.15
GROUP 3	$ 26.90	17.15
GROUP 4	$ 27.40	17.15
GROUP 5	$ 28.15	17.15
GROUP 6	$ 28.40	17.15
GROUP 7	$ 16.00	17.15

LABORERS CLASSIFICATIONS

GROUP 1: Laborers (Unskilled), acetylene burner, concrete specialist

GROUP 2: Chain saw operators, fence and guard rail erectors, pneumatic tool operators and powdermen.

GROUP 3: Pipelayers, Jackhammer/Pavement breaker (handheld), mason tenders/catch basin builders, asphalt rakers, air track operators, block paver and curb setter

GROUP 4: Asbestos/lead removal

GROUP 5: Blasters

GROUP 6: Toxic waste remover

GROUP 7: Traffic control signalman

PAIN0011-013 06/01/2013

	Rates	Fringes
PAINTER		
Brush and Roller	$ 30.62	17.75
Spray Only	$ 33.62	17.75
Steel Only	$ 32.62	17.75

TEAM0064-001 04/07/2013

	Rates	Fringes
Truck drivers:		
2 Axle Ready Mix	$ 27.98	18.27
2 Axle	$ 27.88	18.27
3 Axle Ready Mix	$ 28.03	18.27
3 Axle	$ 27.98	18.27
4 Axle Ready Mix	$ 28.13	18.27
4 Axle	$ 28.08	18.27
Heavy Duty Trailer 40 tons and over	$ 28.33	18.27
Heavy Duty Trailer up to 40 tons	$ 28.08	18.27
Specialized (Earth moving equipment other than conventional type on-the-road trucks and semi-trailers, including Euclids)	$ 28.13	18.27

Hazardous waste removal work receives additional $1.25 per hour.

a. PAID HOLIDAYS: New Year's Day, Memorial Day, Independence Day, Labor Day, Thanksgiving Day, Christmas Day and Good Friday, provided the employee has at least 31 calendar days of service and works the last scheduled day before and the first scheduled day after the holiday, unless excused.

TEAM0064-006 04/07/2013

	Rates	Fringes
TRUCK DRIVER: 4 Axle Truck.....	$ 28.08	18.27

Hazardous waste removal work receives additional $1.25 per hour.

a. PAID HOLIDAYS: New Year's Day, Memorial Day, Independence Day, Labor Day, Thanksgiving Day, Christmas Day and Good Friday, provided the employee has at least 31 calendar days of service and works the last scheduled day before and the first scheduled day after the holiday, unless excused.

SUCT2002-011 12/16/2008

	Rates	Fringes
IRONWORKER, STRUCTURAL.....	$ 24.85	13.83
OPERATOR: Bulldozer.....	$ 25.33	9.64

WELDERS - Receive rate prescribed for craft performing operation to which welding is incidental.

==========

Unlisted classifications needed for work not included within the scope of the classifications listed may be added after award only as provided in the labor standards contract clauses (29CFR 5.5 (a) (1) (ii)).

The body of each wage determination lists the classification and wage rates that have been found to be prevailing for the cited type(s) of construction in the area covered by the wage determination. The classifications are listed in alphabetical order of "identifiers" that indicate whether the particular rate is union or non-union.

Union Identifiers

An identifier enclosed in dotted lines beginning with characters other than "SU" denotes that the union classification and rate have found to be prevailing for that classification. Example: PLUM0198-005 07/01/2011. The first four letters , PLUM, indicate the international union and the four-digit number, 0198, that follows indicates the local union number or district council number where applicable , i.e., Plumbers Local 0198. The next number, 005 in the example, is an internal number used in processing the wage determination. The date, 07/01/2011, following these characters is the effective date of the most current negotiated rate/collective bargaining agreement which would be July 1, 2011 in the above example.

Union prevailing wage rates will be updated to reflect any

changes in the collective bargaining agreements governing the rates.

0000/9999: weighted union wage rates will be published annually each January.

Non-Union Identifiers

Classifications listed under an "SU" identifier were derived from survey data by computing average rates and are not union rates; however, the data used in computing these rates may include both union and non-union data. Example: SULA2004-007 5/13/2010. SU indicates the rates are not union majority rates, LA indicates the State of Louisiana; 2004 is the year of the survey; and 007 is an internal number used in producing the wage determination. A 1993 or later date, 5/13/2010, indicates the classifications and rates under that identifier were issued as a General Wage Determination on that date.

Survey wage rates will remain in effect and will not change until a new survey is conducted.

WAGE DETERMINATION APPEALS PROCESS

1.) Has there been an initial decision in the matter? This can be:

* an existing published wage determination
* a survey underlying a wage determination
* a Wage and Hour Division letter setting forth a position on a wage determination matter
* a conformance (additional classification and rate) ruling

On survey related matters, initial contact, including requests for summaries of surveys, should be with the Wage and Hour Regional Office for the area in which the survey was conducted because those Regional Offices have responsibility for the Davis-Bacon survey program. If the response from this initial contact is not satisfactory, then the process described in 2.) and 3.) should be followed.

With regard to any other matter not yet ripe for the formal process described here, initial contact should be with the Branch of Construction Wage Determinations. Write to:

Branch of Construction Wage Determinations
Wage and Hour Division
U.S. Department of Labor
200 Constitution Avenue, N.W.
Washington, DC 20210

2.) If the answer to the question in 1.) is yes, then an interested party (those affected by the action) can request review and reconsideration from the Wage and Hour Administrator (See 29 CFR Part 1.8 and 29 CFR Part 7). Write to:

Wage and Hour Administrator
U.S. Department of Labor

200 Constitution Avenue, N.W.
Washington, DC 20210

The request should be accompanied by a full statement of the interested party's position and by any information (wage payment data, project description, area practice material, etc.) that the requestor considers relevant to the issue.

3.) If the decision of the Administrator is not favorable, an interested party may appeal directly to the Administrative Review Board (formerly the Wage Appeals Board). Write to:

Administrative Review Board
U.S. Department of Labor
200 Constitution Avenue, N.W.
Washington, DC 20210

4.) All decisions by the Administrative Review Board are final.

==========

END OF GENERAL DECISION

General Decision Number: CT140017 01/31/2014 CT17

Superseded General Decision Number: CT20130017

State: Connecticut

Construction Type: Heavy

County: New London County in Connecticut.

HEAVY CONSTRUCTION PROJECTS

Modification Number	Publication Date
0	01/03/2014
1	01/31/2014

* BRCT0001-011 12/30/2013

	Rates	Fringes
BRICKLAYER	$ 32.50	27.06

---

* BRCT0001-012 12/30/2013

	Rates	Fringes
CEMENT MASON/CONCRETE FINISHER	$ 32.50	27.06

CARP0024-007 05/06/2013

	Rates	Fringes
CARPENTER		
CARPENTERS, PILEDRIVERS	$ 30.45	21.65
DIVER TENDERS	$ 30.45	21.65
DIVERS	$ 38.91	21.65
MILLWRIGHTS	$ 30.78	22.15

ELEC0035-011 06/01/2013

Bozrah, Colchester, Franklin, Griswold, Lebanon, Ledyard, Lisbon, Montville, North Stonington, Norwich, Preston, Salem, Sprague, Stonington and Voluntown

	Rates	Fringes
ELECTRICIAN	$ 37.60	23.35

ELEC0090-003 06/01/2010

East Lyme, Groton, New London, Old Lyme, Waterford, plus the part of Ledyard wherein the property of the Submarine Base is located

	Rates	Fringes
ELECTRICIAN	$ 35.20	20.51

ENGI0478-001 04/07/2013

	Rates	Fringes

Power equipment operators:

GROUP 1	$ 36.05	21.55
GROUP 2	$ 35.73	21.55
GROUP 3	$ 34.99	21.55
GROUP 4	$ 34.60	21.55
GROUP 5	$ 34.01	21.55
GROUP 6	$ 33.70	21.55
GROUP 7	$ 33.36	21.55
GROUP 8	$ 32.96	21.55
GROUP 9	$ 32.53	21.55
GROUP 10	$ 30.49	21.55
GROUP 11	$ 30.49	21.55
GROUP 12	$ 30.43	21.55
GROUP 13	$ 31.96	21.55
GROUP 14	$ 29.85	21.55
GROUP 15	$ 29.54	21.55
GROUP 16	$ 28.71	21.55
GROUP 17	$ 28.30	21.55
GROUP 18	$ 27.65	21.55

Hazardous waste premium $3.00 per hour over classified rate.

Crane with boom, including jib, 150 feet - $1.50 extra.
Crane with boom, including jib, 200 feet - $2.50 extra.
Crane with boom, including jib, 250 feet - $5.00 extra.
Crane with boom, including jib, 300 feet - $7.00 extra.
Crane with boom, including jib, 400 feet - $10.00 extra

a. PAID HOLIDAYS: New Year's Day, Good Friday, Memorial Day, Independence Day, Labor Day, Thanksgiving Day and Christmas Day, provided the employee works 3 days during the week in which the holiday falls, if scheduled, and if scheduled, the working day before and the working day after the holiday.

POWER EQUIPMENT OPERATORS CLASSIFICATIONS

GROUP 1: Crane handling or erecting structural steel or stone, hoisting engineer (2 drums or over), front end loader (7 cubic yards or over), work boat 26 ft. and over.

GROUP 2: Cranes (100 ton capacity & over), Excavator over 2 cubic yards, piledriver ($3.00 premium when operator controls hammer).

GROUP 3: Excavator, cranes (under 100 ton rated capacity), gradall, master mechanic, hoisting engineer (all types of equipment where a drum and cable are used to hoist or drag material regardless of motive power or operation) Rubber Tire Excavator (drott 1085 or similar); Grader Operator; Bulldozer Fine Grade (slopes, shaping, laser or GPS, etc.)

GROUP 4: Trenching machines, lighter derrick, concrete finishing machine, CMI machine or similar, Koehring Loader (skooper).

GROUP 5: Specialty railroad equipment, asphalt spreader, asphalt reclaiming machine, line grider, concrete pumps, drills with self contained power units, boring machine, post hole digger, auger, pounder, well digger, milling machine (over 24' mandrel), side boom, combination hoe and loader, directional driller.

GROUP 6: Front end loader (3 cu. yds. up to 7 cu. yards), bulldozer (Rough grade dozer) .

GROUP 7: Asphalt roller, concrete saws and cutters (ride on types), Vermeer concrete cutter, stump grinder, scraper, snooper, skidder, milling machine (24" and under Mandrel).

GROUP 8: Mechanic, grease truck operator, hydoblaster, barrier mover, power stone spreader, welder, work boat under 26 ft. transfer machine.

GROUP 9: Front end loader (under 3 cubic yards), skid steer loader (regardless of attachments), bobcat or similar, forklift, power chipper, landscape equipment (including hydroseeder).

GROUP 10: Vibratory hammer,ice machine, diesel & air, hammer, etc.

GROUP 11: Conveyor, earth roller, power pavement breaker (whiphammer), robot demolition equipment.

GROUP 12: Wellpoint operator.

GROUP 13: Portable asphalt plant operator, portable concrete plant operator, portable crusher plant operator.

GROUP 14: Compressor battery operator.

GROUP 15: Power Safety boat, Vacuum truck, Zim mixer, Sweeper; (Minimum for any job requiring a CDL license) .

GROUP 16: Elevator operator, tow motor operator (solid tire no rough terrain).

GROUP 17: Generator operator, compressor operator, pump operator,welding machine operator; Heater operator.

GROUP 18: Maintenance engineer.

ENGI0478-008 04/07/2013

	Rates	Fringes
POWER EQUIPMENT OPERATOR:		
Asphalt Paver	$ 34.01	21.55
Asphalt Roller	$ 33.36	21.55
Asphalt Spreader	$ 34.01	21.55
Backhoe/Excavator 2 cubic yards and over	$ 35.73	21.55
Backhoe/Excavator under 2 cubic yards	$ 34.99	21.55
Bulldozer (Rough Grade Dozer)	$ 33.70	21.55
Bulldozer Fine Grade(includes slopes, shaping, laser or gps)	$ 34.99	21.55
Crane handling or erecting structural steel or stone	$ 36.05	21.55
Cranes (100 ton capacity & over)	$ 35.73	21.55

Cranes (under 100 ton rated capacity)	$ 34.99	21.55
Drills with self contained power units; Directional driller	$ 34.01	21.55
Earth Roller	$ 30.49	21.55
Forklift	$ 32.53	21.55
Front End Loader (3 cubic yards up to 7 cubic yards)	$ 33.70	21.55
Front End Loader (7 cubic yards or over)	$ 36.05	21.55
Front End Loader (under 3 cubic yards)	$ 32.53	21.55
Grader/Blade	$ 34.99	21.55
Maintenance Engineer/Oiler	$ 27.65	21.55
Mechanic	$ 32.96	21.55
Rubber Tire Backhoe/Excavator	$ 34.99	21.55

a. PAID HOLIDAYS: New Year's Day, Good Friday, Memorial Day, Independence Day, Labor Day, Thanksgiving Day and Christmas Day, provided the employee works 3 days during the week in which the holiday falls, if scheduled, and if scheduled, the working day before and the working day after the holiday.

b. Crane with boom, including jib, 150 feet - $1.50 extra .
Crane with boom, including jib, 200 feet- $2.50 extra.
Crane with boom, including jib, 250 feet - $5.00 extra.
Crane with boom, including jib, 300 feet - $7.00 extra.
Crane with boom, including jib, 400 feet - $10.00 extra.

IRON0015-008 07/01/2013

	Rates	Fringes
IRONWORKER, REINFORCING AND STRUCTURAL	$ 33.50	28.98

a. PAID HOLIDAY: Labor Day provided employee has been on the payroll for the 5 consecutive work days prior to Labor Day.

LABO0056-004 04/07/2013

	Rates	Fringes
Laborers: (TUNNEL CONSTRUCTION)		
CLEANING, CONCRETE AND CAULKING TUNNEL:		
Concrete Workers, Form Movers and Strippers	$ 30.37	16.89
Form Erectors	$ 30.68	16.89
ROCK SHAFT, CONCRETE, LINING OF SAME AND TUNNEL IN FREE AIR:		
Brakemen, Trackmen, Tunnel Laborers, Shaft Laborers	$ 30.37	16.89
Laborers Topside, Cage Tenders, Bellman	$ 30.26	16.89

Miners	$ 31.28	16.89
SHIELD DRIVE AND LINER PLATE TUNNELS IN FREE AIR:		
Brakemen and Trackmen	$ 30.37	16.89
Miners, Motormen, Mucking Machine Operators, Nozzlemen, Grout Men, Shaft and Tunnel, Steel and Rodmen, Shield and Erector, Arm Operator, Cable Tenders	$ 31.28	16.89
TUNNELS, CAISSON AND CYLINDER WORK IN COMPRESSED AIR:		
Blaster	$ 37.41	16.89
Brakemen, Trackmen, Groutman, Laborers, Outside Lock Tender, Gauge Tenders	$ 37.22	16.89
Change House Attendants, Powder Watchmen, Top on Iron Bolts	$ 35.35	16.89
Mucking Machine Operator	$ 37.97	16.89

a. PAID HOLIDAYS: On tunnel work only: New Year's Day, Memorial Day, Independence Day, Labor Day, Thanksgiving Day and Christmas Day.

No employee shall be eligible for holiday pay when he fails, without cause, to work the regular work day preceding the holiday or the regular work day following the holiday.

LABO0056-007 04/07/2013

	Rates	Fringes
LABORERS		
GROUP 1	$ 26.40	17.15
GROUP 2	$ 26.65	17.15
GROUP 3	$ 26.90	17.15
GROUP 4	$ 27.40	17.15
GROUP 5	$ 28.15	17.15
GROUP 6	$ 28.40	17.15
GROUP 7	$ 16.00	17.15

LABORERS CLASSIFICATIONS

GROUP 1: Laborers (Unskilled), acetylene burner, concrete specialist

GROUP 2: Chain saw operators, fence and guard rail erectors, pneumatic tool operators and powdermen.

GROUP 3: Pipelayers, Jackhammer/Pavement breaker (handheld), mason tenders/catch basin builders, asphalt rakers, air track operators, block paver and curb setter

GROUP 4: Asbestos/lead removal

GROUP 5: Blasters

GROUP 6: Toxic waste remover

GROUP 7: Traffic control signalman

PAIN0011-013 06/01/2013

	Rates	Fringes
PAINTER		
Brush and Roller	$ 30.62	17.75
Spray Only	$ 33.62	17.75
Steel Only	$ 32.62	17.75

TEAM0064-001 04/07/2013

	Rates	Fringes
Truck drivers:		
2 Axle Ready Mix	$ 27.98	18.27
2 Axle	$ 27.88	18.27
3 Axle Ready Mix	$ 28.03	18.27
3 Axle	$ 27.98	18.27
4 Axle Ready Mix	$ 28.13	18.27
4 Axle	$ 28.08	18.27
Heavy Duty Trailer 40 tons and over	$ 28.33	18.27
Heavy Duty Trailer up to 40 tons	$ 28.08	18.27
Specialized (Earth moving equipment other than conventional type on-the-road trucks and semi-trailers, including Euclids)	$ 28.13	18.27

Hazardous waste removal work receives additional $1.25 per hour.

a. PAID HOLIDAYS: New Year's Day, Memorial Day, Independence Day, Labor Day, Thanksgiving Day, Christmas Day and Good Friday, provided the employee has at least 31 calendar days of service and works the last scheduled day before and the first scheduled day after the holiday, unless excused.

TEAM0064-006 04/07/2013

	Rates	Fringes
TRUCK DRIVER: 4 Axle Truck	$ 28.08	18.27

Hazardous waste removal work receives additional $1.25 per hour.

a. PAID HOLIDAYS: New Year's Day, Memorial Day, Independence Day, Labor Day, Thanksgiving Day, Christmas Day and Good Friday, provided the employee has at least 31 calendar days of service and works the last scheduled day before and the first scheduled day after the holiday, unless excused.

SUCT2002-012 12/16/2008

	Rates	Fringes
CEMENT MASON/CONCRETE FINISHER...	$ 25.52	8.49
TRUCK DRIVER: 3 Axle & Semi - Truck.....	$ 19.93	7.01

WELDERS - Receive rate prescribed for craft performing operation to which welding is incidental.

==========

Unlisted classifications needed for work not included within the scope of the classifications listed may be added after award only as provided in the labor standards contract clauses (29CFR 5.5 (a) (1) (ii)).

The body of each wage determination lists the classification and wage rates that have been found to be prevailing for the cited type(s) of construction in the area covered by the wage determination. The classifications are listed in alphabetical order of "identifiers" that indicate whether the particular rate is union or non-union.

Union Identifiers

An identifier enclosed in dotted lines beginning with characters other than "SU" denotes that the union classification and rate have found to be prevailing for that classification. Example: PLUM0198-005 07/01/2011. The first four letters , PLUM, indicate the international union and the four-digit number, 0198, that follows indicates the local union number or district council number where applicable , i.e., Plumbers Local 0198. The next number, 005 in the example, is an internal number used in processing the wage determination. The date, 07/01/2011, following these characters is the effective date of the most current negotiated rate/collective bargaining agreement which would be July 1, 2011 in the above example.

Union prevailing wage rates will be updated to reflect any changes in the collective bargaining agreements governing the rates.

0000/9999: weighted union wage rates will be published annually each January.

Non-Union Identifiers

Classifications listed under an "SU" identifier were derived from survey data by computing average rates and are not union rates; however, the data used in computing these rates may include both union and non-union data. Example: SULA2004-007

5/13/2010. SU indicates the rates are not union majority rates, LA indicates the State of Louisiana; 2004 is the year of the survey; and 007 is an internal number used in producing the wage determination. A 1993 or later date, 5/13/2010, indicates the classifications and rates under that identifier were issued as a General Wage Determination on that date.

Survey wage rates will remain in effect and will not change until a new survey is conducted.

WAGE DETERMINATION APPEALS PROCESS

1.) Has there been an initial decision in the matter? This can be:

* an existing published wage determination
* a survey underlying a wage determination
* a Wage and Hour Division letter setting forth a position on a wage determination matter
* a conformance (additional classification and rate) ruling

On survey related matters, initial contact, including requests for summaries of surveys, should be with the Wage and Hour Regional Office for the area in which the survey was conducted because those Regional Offices have responsibility for the Davis-Bacon survey program. If the response from this initial contact is not satisfactory, then the process described in 2.) and 3.) should be followed.

With regard to any other matter not yet ripe for the formal process described here, initial contact should be with the Branch of Construction Wage Determinations. Write to:

Branch of Construction Wage Determinations
Wage and Hour Division
U.S. Department of Labor
200 Constitution Avenue, N.W.
Washington, DC 20210

2.) If the answer to the question in 1.) is yes, then an interested party (those affected by the action) can request review and reconsideration from the Wage and Hour Administrator (See 29 CFR Part 1.8 and 29 CFR Part 7). Write to:

Wage and Hour Administrator
U.S. Department of Labor
200 Constitution Avenue, N.W.
Washington, DC 20210

The request should be accompanied by a full statement of the interested party's position and by any information (wage payment data, project description, area practice material, etc.) that the requestor considers relevant to the issue.

3.) If the decision of the Administrator is not favorable, an interested party may appeal directly to the Administrative Review Board (formerly the Wage Appeals Board). Write to:

Administrative Review Board
U.S. Department of Labor

200 Constitution Avenue, N.W.
Washington, DC 20210

4.) All decisions by the Administrative Review Board are final.

==========

END OF GENERAL DECISION

General Decision Number: CT140026 01/31/2014 CT26

Superseded General Decision Number: CT20130026

State: Connecticut

Construction Type: Heavy

Counties: Litchfield and Windham Counties in Connecticut.

HEAVY CONSTRUCTION PROJECTS

Modification Number	Publication Date
0	01/03/2014
1	01/31/2014

* BRCT0001-015 12/30/2013

	Rates	Fringes
BRICKLAYER		
BRICKLAYERS, CEMENT MASONS, CEMENT FINISHERS, STONE MASONS	$ 32.50	27.06

CARP0024-011 05/06/2013

	Rates	Fringes
CARPENTER		
Carpenters, Piledrivers	$ 30.45	21.65
Diver Tenders	$ 30.45	21.65
Divers	$ 38.91	21.65
Millwrights	$ 30.78	22.15

ELEC0035-008 06/01/2013

WINDHAM COUNTY

	Rates	Fringes
ELECTRICIAN	$ 37.60	23.35

ELEC0042-001 09/03/2013

	Rates	Fringes
Line Construction: (Railroad Construction and Maintenance)		
Eqiupment Operator	$ 38.62	6.5%+14.30
Groundmen	$ 24.99	6.5%+9.75
Heavy Equipment Operators	$ 40.89	6.5%+14.60
Lineman, Cable Splicer, Technician	$ 45.43	6.5%+16.20
Truck Driver	$ 34.07	6.5%+13.45

ELEC0090-008 05/06/2013

LITCHFIELD COUNTY
Plymouth Township

	Rates	Fringes

ELECTRICIAN.....$ 36.75 23.67

ELEC0488-011 06/01/2013

LITCHFIELD COUNTY (Excluding Plymouth Township)

	Rates	Fringes
ELECTRICIAN.....	$ 36.52	24.10

ENGI0478-001 04/07/2013

	Rates	Fringes
Power equipment operators:		
GROUP 1.....	$ 36.05	21.55
GROUP 2.....	$ 35.73	21.55
GROUP 3.....	$ 34.99	21.55
GROUP 4.....	$ 34.60	21.55
GROUP 5.....	$ 34.01	21.55
GROUP 6.....	$ 33.70	21.55
GROUP 7.....	$ 33.36	21.55
GROUP 8.....	$ 32.96	21.55
GROUP 9.....	$ 32.53	21.55
GROUP 10.....	$ 30.49	21.55
GROUP 11.....	$ 30.49	21.55
GROUP 12.....	$ 30.43	21.55
GROUP 13.....	$ 31.96	21.55
GROUP 14.....	$ 29.85	21.55
GROUP 15.....	$ 29.54	21.55
GROUP 16.....	$ 28.71	21.55
GROUP 17.....	$ 28.30	21.55
GROUP 18.....	$ 27.65	21.55

Hazardous waste premium $3.00 per hour over classified rate.

Crane with boom, including jib, 150 feet - $1.50 extra.
Crane with boom, including jib, 200 feet - $2.50 extra.
Crane with boom, including jib, 250 feet - $5.00 extra.
Crane with boom, including jib, 300 feet - $7.00 extra.
Crane with boom, including jib, 400 feet - $10.00 extra

a. PAID HOLIDAYS: New Year's Day, Good Friday, Memorial Day, Independence Day, Labor Day, Thanksgiving Day and Christmas Day, provided the employee works 3 days during the week in which the holiday falls, if scheduled, and if scheduled, the working day before and the working day after the holiday.

POWER EQUIPMENT OPERATORS CLASSIFICATIONS

GROUP 1: Crane handling or erecting structural steel or stone, hoisting engineer (2 drums or over), front end loader (7 cubic yards or over), work boat 26 ft. and over.

GROUP 2: Cranes (100 ton capacity & over), Excavator over 2 cubic yards, piledriver ($3.00 premium when operator controls hammer).

GROUP 3: Excavator, cranes (under 100 ton rated capacity), gradall, master mechanic, hoisting engineer (all types of equipment where a drum and cable are used to hoist or drag

material regardless of motive power or operation) Rubber Tire Excavator (drott 1085 or similar); Grader Operator; Bulldozer Fine Grade (slopes, shaping, laser or GPS, etc.)

GROUP 4: Trenching machines, lighter derrick, concrete finishing machine, CMI machine or similar, Koehring Loader (skooper).

GROUP 5: Specialty railroad equipment, asphalt spreader, asphalt reclaiming machine, line grider, concrete pumps, drills with self contained power units, boring machine, post hole digger, auger, pounder, well digger, milling machine (over 24' mandrel), side boom, combination hoe and loader, directional driller.

GROUP 6: Front end loader (3 cu. yds. up to 7 cu. yards), bulldozer (Rough grade dozer) .

GROUP 7: Asphalt roller, concrete saws and cutters (ride on types), Vermeer concrete cutter, stump grinder, scraper, snooper, skidder, milling machine (24" and under Mandrel).

GROUP 8: Mechanic, grease truck operator, hydoblaster, barrier mover, power stone spreader, welder, work boat under 26 ft. transfer machine.

GROUP 9: Front end loader (under 3 cubic yards), skid steer loader (regardless of attachments), bobcat or similar, forklift, power chipper, landscape equipment (including hydroseeder).

GROUP 10: Vibratory hammer,ice machine, diesel & air, hammer, etc.

GROUP 11: Conveyor, earth roller, power pavement breaker (whiphammer), robot demolition equipment.

GROUP 12: Wellpoint operator.

GROUP 13: Portable asphalt plant operator, portable concrete plant operator, portable crusher plant operator.

GROUP 14: Compressor battery operator.

GROUP 15: Power Safety boat, Vacuum truck, Zim mixer, Sweeper; (Minimum for any job requiring a CDL license) .

GROUP 16: Elevator operator, tow motor operator (solid tire no rough terrain).

GROUP 17: Generator operator, compressor operator, pump operator,welding machine operator; Heater operator.

GROUP 18: Maintenance engineer.

IRON0015-001 07/01/2013

	Rates	Fringes
Ironworkers: (Ornamental, Reinforcing, Structural and Precast Concrete Erection).....	$ 33.50	28.98

a. PAID HOLIDAY: Labor Day provided employee has been on the payroll for the 5 consecutive work days prior to Labor Day.

LABO0056-004 04/07/2013

	Rates	Fringes
Laborers: (TUNNEL CONSTRUCTION)		
CLEANING, CONCRETE AND CAULKING TUNNEL:		
Concrete Workers, Form Movers and Strippers	$ 30.37	16.89
Form Erectors	$ 30.68	16.89
ROCK SHAFT, CONCRETE, LINING OF SAME AND TUNNEL IN FREE AIR:		
Brakemen, Trackmen, Tunnel Laborers, Shaft Laborers	$ 30.37	16.89
Laborers Topside, Cage Tenders, Bellman	$ 30.26	16.89
Miners	$ 31.28	16.89
SHIELD DRIVE AND LINER PLATE TUNNELS IN FREE AIR:		
Brakemen and Trackmen	$ 30.37	16.89
Miners, Motormen, Mucking Machine Operators, Nozzlemen, Grout Men, Shaft and Tunnel, Steel and Rodmen, Shield and Erector, Arm Operator, Cable Tenders	$ 31.28	16.89
TUNNELS, CAISSON AND CYLINDER WORK IN COMPRESSED AIR:		
Blaster	$ 37.41	16.89
Brakemen, Trackmen, Groutman, Laborers, Outside Lock Tender, Gauge Tenders	$ 37.22	16.89
Change House Attendants, Powder Watchmen, Top on Iron Bolts	$ 35.35	16.89
Mucking Machine Operator	$ 37.97	16.89

a. PAID HOLIDAYS: On tunnel work only: New Year's Day, Memorial Day, Independence Day, Labor Day, Thanksgiving Day and Christmas Day.

No employee shall be eligible for holiday pay when he fails, without cause, to work the regular work day preceding the holiday or the regular work day following the holiday.

LABO0056-013 04/07/2013

	Rates	Fringes
LABORER (HEAVY CONSTRUCTION)		
GROUP 1	$ 26.40	17.15

GROUP 2.....$ 26.65 17.15
GROUP 3.....$ 26.90 17.15
GROUP 4.....$ 27.40 17.15
GROUP 5.....$ 28.15 17.15
GROUP 6.....$ 28.40 17.15
GROUP 7.....$ 16.00 17.15

LABORERS CLASSIFICATIONS

GROUP 1: Laborers (Unskilled), acetylene burner, concrete specialist

GROUP 2: Chain saw operators, fence and guard rail erectors, pneumatic tool operators and powdermen.

GROUP 3: Pipelayers, Jackhammer/Pavement breaker (handheld), mason tenders/catch basin builders, asphalt rakers, air track operators, block paver and curb setter

GROUP 4: Asbestos/lead removal

GROUP 5: Blasters

GROUP 6: Toxic waste remover

GROUP 7: Traffic control signalman

PAIN0011-003 06/01/2013

	Rates	Fringes
Painters: (BRIDGE CONSTRUCTION)		
Brush, Roller, Blasting (Sand, Water, etc.) Spray	$ 43.15	17.75

PAIN0011-018 06/01/2013

	Rates	Fringes
PAINTER		
Blast and Spray	$ 33.62	17.75
Brush and Roll	$ 30.62	17.75
Tanks, Towers, Swing	$ 32.62	17.75

PLUM0777-002 06/01/2013

	Rates	Fringes
PLUMBER/PIPEFITTER	$ 39.31	26.27

TEAM0064-001 04/07/2013

	Rates	Fringes
Truck drivers:		
2 Axle Ready Mix	$ 27.98	18.27
2 Axle	$ 27.88	18.27
3 Axle Ready Mix	$ 28.03	18.27
3 Axle	$ 27.98	18.27
4 Axle Ready Mix	$ 28.13	18.27

4 Axle	$ 28.08	18.27
Heavy Duty Trailer 40 tons and over	$ 28.33	18.27
Heavy Duty Trailer up to 40 tons	$ 28.08	18.27
Specialized (Earth moving equipment other than conventional type on-the-road trucks and semi-trailers, including Euclids)	$ 28.13	18.27

Hazardous waste removal work receives additional $1.25 per hour.

a. PAID HOLIDAYS: New Year's Day, Memorial Day, Independence Day, Labor Day, Thanksgiving Day, Christmas Day and Good Friday, provided the employee has at least 31 calendar days of service and works the last scheduled day before and the first scheduled day after the holiday, unless excused.

WELDERS - Receive rate prescribed for craft performing operation to which welding is incidental.

==========

Unlisted classifications needed for work not included within the scope of the classifications listed may be added after award only as provided in the labor standards contract clauses (29CFR 5.5 (a) (1) (ii)).

The body of each wage determination lists the classification and wage rates that have been found to be prevailing for the cited type(s) of construction in the area covered by the wage determination. The classifications are listed in alphabetical order of "identifiers" that indicate whether the particular rate is union or non-union.

Union Identifiers

An identifier enclosed in dotted lines beginning with characters other than "SU" denotes that the union classification and rate have found to be prevailing for that classification. Example: PLUM0198-005 07/01/2011. The first four letters , PLUM, indicate the international union and the four-digit number, 0198, that follows indicates the local union number or district council number where applicable , i.e., Plumbers Local 0198. The next number, 005 in the example, is an internal number used in processing the wage determination. The date, 07/01/2011, following these characters is the effective date of the most current negotiated rate/collective bargaining agreement which would be July 1, 2011 in the above example.

Union prevailing wage rates will be updated to reflect any

changes in the collective bargaining agreements governing the rates.

0000/9999: weighted union wage rates will be published annually each January.

Non-Union Identifiers

Classifications listed under an "SU" identifier were derived from survey data by computing average rates and are not union rates; however, the data used in computing these rates may include both union and non-union data. Example: SULA2004-007 5/13/2010. SU indicates the rates are not union majority rates, LA indicates the State of Louisiana; 2004 is the year of the survey; and 007 is an internal number used in producing the wage determination. A 1993 or later date, 5/13/2010, indicates the classifications and rates under that identifier were issued as a General Wage Determination on that date.

Survey wage rates will remain in effect and will not change until a new survey is conducted.

WAGE DETERMINATION APPEALS PROCESS

1.) Has there been an initial decision in the matter? This can be:

* an existing published wage determination
* a survey underlying a wage determination
* a Wage and Hour Division letter setting forth a position on a wage determination matter
* a conformance (additional classification and rate) ruling

On survey related matters, initial contact, including requests for summaries of surveys, should be with the Wage and Hour Regional Office for the area in which the survey was conducted because those Regional Offices have responsibility for the Davis-Bacon survey program. If the response from this initial contact is not satisfactory, then the process described in 2.) and 3.) should be followed.

With regard to any other matter not yet ripe for the formal process described here, initial contact should be with the Branch of Construction Wage Determinations. Write to:

Branch of Construction Wage Determinations
Wage and Hour Division
U.S. Department of Labor
200 Constitution Avenue, N.W.
Washington, DC 20210

2.) If the answer to the question in 1.) is yes, then an interested party (those affected by the action) can request review and reconsideration from the Wage and Hour Administrator (See 29 CFR Part 1.8 and 29 CFR Part 7). Write to:

Wage and Hour Administrator
U.S. Department of Labor

200 Constitution Avenue, N.W.
Washington, DC 20210

The request should be accompanied by a full statement of the interested party's position and by any information (wage payment data, project description, area practice material, etc.) that the requestor considers relevant to the issue.

3.) If the decision of the Administrator is not favorable, an interested party may appeal directly to the Administrative Review Board (formerly the Wage Appeals Board). Write to:

Administrative Review Board
U.S. Department of Labor
200 Constitution Avenue, N.W.
Washington, DC 20210

4.) All decisions by the Administrative Review Board are final.

==========

END OF GENERAL DECISION

Project: Rehabilitation Of Metro North Railroad Bridge Number 03948R Over Sound Beach Avenue And Bridge Number 03955R Over Tomac Avenue

Minimum Rates and Classifications for Heavy/Highway Construction

Connecticut Department of Labor
Wage and Workplace Standards Division

ID#: **H** 18704

By virtue of the authority vested in the Labor Commissioner under provisions of Section 31-53 of the General Statutes of Connecticut, as amended, the following are declared to be the prevailing rates and welfare payments and will apply only where the contract is advertised for bid within 20 days of the date on which the rates are established. Any contractor or subcontractor not obligated by agreement to pay to the welfare and pension fund shall pay this amount to each employee as part of his/her hourly wages.

Project Number: | Project Town: Greenwich
FTA Number: CT-90-X510 & CT-05-0107 | State Number: 301-092
Project: Rehabilitation Of Metro North Railroad Bridge Number 03948R Over Sound Beach Avenue And Bridge Number 03955R Over Tomac Avenue

CLASSIFICATION	Hourly Rate	Benefits
01) Asbestos/Toxic Waste Removal Laborers: Asbestos removal and encapsulation (except its removal from mechanical systems which are not to be scrapped), toxic waste removers, blasters. **See Laborers Group 5 and 7**		
1) Boilermaker	33.79	34% + 8.96
1a) Bricklayer, Cement Masons, Cement Finishers, Plasterers, Stone Masons	32.50	25.81
2) Carpenters, Piledrivermen	30.45	21.65

As of: Wednesday, January 29, 2014

Project: Rehabilitation Of Metro North Railroad Bridge Number 03948R Over Sound Beach Avenue And Bridge Number 03955R Over Tomac Avenue

2a) Diver Tenders	30.45	21.65
3) Divers	38.91	21.65
4) Painters: (Bridge Construction) Brush, Roller, Blasting (Sand, Water, etc.), Spray	44.25	17.75
4a) Painters: Brush and Roller	30.62	17.75
4b) Painters: Spray Only	33.62	17.75
4c) Painters: Steel Only	32.62	17.75
4d) Painters: Blast and Spray	33.62	17.75

As of: Wednesday, January 29, 2014

Project: Rehabilitation Of Metro North Railroad Bridge Number 03948R Over Sound Beach Avenue And Bridge Number 03955R Over Tomac Avenue

4e) Painters: Tanks, Tower and Swing	32.62	17.75
5) Electrician (Trade License required: E-1,2 L-5,6 C-5,6 T-1,2 L-1,2 V-1,2,7,8,9)	50.75	39.65
6) Ironworkers: Ornamental, Reinforcing, Structural, and Precast Concrete Erection	33.50	28.98
7) Plumbers (Trade License required: (P-1,2,6,7,8,9 J-1,2,3,4 SP-1,2) and Pipefitters (Including HVAC Work) (Trade License required: S-1,2,3,4,5,6,7,8 B-1,2,3,4 D-1,2,3,4 G-1, G-2, G-8, G-9)	39.31	26.27

----LABORERS---- -

8) Group 1: Laborer (Unskilled), Common or General, acetylene burner, concrete specialist	26.40	17.15
9) Group 2: Chain saw operators, fence and guard rail erectors, pneumatic tool operators, powdermen, air tool operator	26.65	17.15

As of: Wednesday, January 29, 2014

Project: Rehabilitation Of Metro North Railroad Bridge Number 03948R Over Sound Beach Avenue And Bridge Number 03955R Over Tomac Avenue

10) Group 3: Pipelayers	26.90	17.15
11) Group 4: Jackhammer/Pavement breaker (handheld); mason tenders (cement/concrete), catch basin builders, asphalt rakers, air track operators, block pavers and curb setters	26.90	17.15
12) Group 5: Toxic waste removal (non-mechanical systems)	28.40	17.15
13) Group 6: Blasters	28.15	17.15
Group 7: Asbestos Removal, non-mechanical systems (does not include leaded joint pipe)	27.40	17.15
Group 8: Traffic control signalmen	16.00	17.15

----LABORERS (TUNNEL CONSTRUCTION, FREE AIR). Shield Drive and Liner Plate Tunnels in Free Air.----

As of: Wednesday, January 29, 2014

Project: Rehabilitation Of Metro North Railroad Bridge Number 03948R Over Sound Beach Avenue And Bridge Number 03955R Over Tomac Avenue

13a) Miners, Motormen, Mucking Machine Operators, Nozzle Men, Grout Men, Shaft & Tunnel Steel & Rodmen, Shield & Erector, Arm Operator, Cable Tenders	31.28	17.15 + a
13b) Brakemen, Trackmen	30.37	17.15 + a

----CLEANING, CONCRETE AND CAULKING TUNNEL----

14) Concrete Workers, Form Movers, and Strippers	30.37	17.15 + a
15) Form Erectors	30.68	17.15 + a

----ROCK SHAFT LINING, CONCRETE, LINING OF SAME AND TUNNEL IN FREE AIR:----

16) Brakemen, Trackmen, Tunnel Laborers, Shaft Laborers	30.37	17.15 + a

As of: Wednesday, January 29, 2014

Project: Rehabilitation Of Metro North Railroad Bridge Number 03948R Over Sound Beach Avenue And Bridge Number 03955R Over Tomac Avenue

17) Laborers Topside, Cage Tenders, Bellman	30.26	17.15 + a
18) Miners	31.28	17.15 + a

----TUNNELS, CAISSON AND CYLINDER WORK IN COMPRESSED AIR: ----

18a) Blaster	37.41	17.15 + a
19) Brakemen, Trackmen, Groutman, Laborers, Outside Lock Tender, Gauge Tenders	37.22	17.15 + a
20) Change House Attendants, Powder Watchmen, Top on Iron Bolts	35.35	17.15 + a
21) Mucking Machine Operator	37.97	17.15 + a

As of: Wednesday, January 29, 2014

Project: Rehabilitation Of Metro North Railroad Bridge Number 03948R Over Sound Beach Avenue
And Bridge Number 03955R Over Tomac Avenue

----TRUCK DRIVERS----(*see note below)

Two axle trucks	27.88	18.27 + a
Three axle trucks; two axle ready mix	27.98	18.27 + a
Three axle ready mix	28.03	18.27 + a
Four axle trucks, heavy duty trailer (up to 40 tons)	28.08	18.27 + a
Four axle ready-mix	28.13	18.27 + a
Heavy duty trailer (40 tons and over)	28.33	18.27 + a

As of: Wednesday, January 29, 2014

Project: Rehabilitation Of Metro North Railroad Bridge Number 03948R Over Sound Beach Avenue And Bridge Number 03955R Over Tomac Avenue

Specialized earth moving equipment other than conventional type on-the road trucks and semi-trailer (including Euclids)	28.13	18.27 + a

----POWER EQUIPMENT OPERATORS----

Group 1: Crane handling or erecting structural steel or stone, hoisting engineer (2 drums or over), front end loader (7 cubic yards or over), Work Boat 26 ft. & Over. (Trade License Required)	36.05	21.55 + a
Group 2: Cranes (100 ton rate capacity and over); Backhoe/Excavator over 2 cubic yards; Piledriver ($3.00 premium when operator controls hammer). (Trade License Required)	35.73	21.55 + a
Group 3: Excavator/Backhoe under 2 cubic yards; Cranes (under 100 ton rated capacity), Gradall; Master Mechanic; Hoisting Engineer (all types of equipment where a drum and cable are used to hoist or drag material regardless of motive power of operation), Rubber Tire Excavator (Drott-1085 or similar);Grader Operator; Bulldozer Fine Grade (slopes, shaping, laser or GPS, etc.). (Trade License Required)	34.99	21.55 + a
Group 4: Trenching Machines; Lighter Derrick; Concrete Finishing Machine; CMI Machine or Similar; Koehring Loader (Skooper)	34.60	21.55 + a
Group 5: Specialty Railroad Equipment; Asphalt Paver; Asphalt Spreader; Asphalt Reclaiming Machine; Line Grinder; Concrete Pumps; Drills with Self Contained Power Units; Boring Machine; Post Hole Digger; Auger; Pounder; Well Digger; Milling Machine (over 24" Mandrell)	34.01	21.55 + a

As of: Wednesday, January 29, 2014

Project: Rehabilitation Of Metro North Railroad Bridge Number 03948R Over Sound Beach Avenue And Bridge Number 03955R Over Tomac Avenue

Group 5 continued: Side Boom; Combination Hoe and Loader; Directional Driller.	34.01	21.55 + a
Group 6: Front End Loader (3 up to 7 cubic yards); Bulldozer (rough grade dozer).	33.70	21.55 + a
Group 7: Asphalt Roller; Concrete Saws and Cutters (ride on types); Vermeer Concrete Cutter; Stump Grinder; Scraper; Snooper; Skidder; Milling Machine (24" and Under Mandrel).	33.36	21.55 + a
Group 8: Mechanic, Grease Truck Operator, Hydroblaster, Barrier Mover, Power Stone Spreader; Welder; Work Boat under 26 ft.; Transfer Machine.	32.96	21.55 + a
Group 9: Front End Loader (under 3 cubic yards), Skid Steer Loader regardless of attachments (Bobcat or Similar); Fork Lift, Power Chipper; Landscape Equipment (including hydroseeder).	32.53	21.55 + a
Group 10: Vibratory Hammer, Ice Machine, Diesel and Air Hammer, etc.	30.49	21.55 + a
Group 11: Conveyor, Earth Roller; Power Pavement Breaker (whiphammer), Robot Demolition Equipment.	30.49	21.55 + a

As of: Wednesday, January 29, 2014

Project: Rehabilitation Of Metro North Railroad Bridge Number 03948R Over Sound Beach Avenue And Bridge Number 03955R Over Tomac Avenue

Group 12: Wellpoint Operator.	30.43	21.55 + a
Group 13: Compressor Battery Operator.	29.85	21.55 + a
Group 14: Elevator Operator; Tow Motor Operator (Solid Tire No Rough Terrain).	28.71	21.55 + a
Group 15: Generator Operator; Compressor Operator; Pump Operator; Welding Machine Operator; Heater Operator.	28.30	21.55 + a
Group 16: Maintenance Engineer/Oiler	27.65	21.55 + a
Group 17: Portable asphalt plant operator; portable crusher plant operator; portable concrete plant operator.	31.96	21.55 + a
Group 18: Power Safety Boat; Vacuum Truck; Zim Mixer; Sweeper; (minimum for any job requiring CDL license).	29.54	21.55 + a

As of: Wednesday, January 29, 2014

Project: Rehabilitation Of Metro North Railroad Bridge Number 03948R Over Sound Beach Avenue
And Bridge Number 03955R Over Tomac Avenue
**NOTE: SEE BELOW

----LINE CONSTRUCTION----(Railroad Construction and Maintenance)----

20) Lineman, Cable Splicer, Dynamite Man	44.36	3% + 13.70
21) Heavy Equipment Operator	39.92	3% + 13.70
22) Equipment Operator, Tractor Trailer Driver, Material Men	37.71	3% + 13.70
23) Driver Groundmen	33.27	3% + 13.70

----LINE CONSTRUCTION----

As of: Wednesday, January 29, 2014

Project: Rehabilitation Of Metro North Railroad Bridge Number 03948R Over Sound Beach Avenue
And Bridge Number 03955R Over Tomac Avenue

24) Driver Groundmen	30.92	6.5% + 9.70
25) Groundmen	22.67	6.5% + 6.20
26) Heavy Equipment Operators	37.10	6.5% + 10.70
27) Linemen, Cable Splicers, Dynamite Men	41.22	6.5% + 12.20
28) Material Men, Tractor Trailer Drivers, Equipment Operators	35.04	6.5% + 10.45

As of: Wednesday, January 29, 2014

Project: Rehabilitation Of Metro North Railroad Bridge Number 03948R Over Sound Beach Avenue And Bridge Number 03955R Over Tomac Avenue

Welders: Rate for craft to which welding is incidental.

**Note: Hazardous waste removal work receives additional $1.25 per hour for truck drivers.*

***Note: Hazardous waste premium $3.00 per hour over classified rate*

Crane with 150 ft. boom (including jib) - $1.50 extra
Crane with 200 ft. boom (including jib) - $2.50 extra
Crane with 250 ft. boom (including jib) - $5.00 extra
Crane with 300 ft. boom (including jib) - $7.00 extra
Crane with 400 ft. boom (including jib) - $10.00 extra

All classifications that indicate a percentage of the fringe benefits must be calculated at the percentage rate times the "base hourly rate".

Apprentices duly registered under the Commissioner of Labor's regulations on "Work Training Standards for Apprenticeship and Training Programs" Section 31-51-d-1 to 12, are allowed to be paid the appropriate percentage of the prevailing journeymen hourly base and the full fringe benefit rate, providing the work site ratio shall not be less than one full-time journeyperson instructing and supervising the work of each apprentice in a specific trade.

~~Connecticut General Statute Section 31-55a: Annual Adjustments to wage rates by contractors doing state work ~~

The Prevailing wage rates applicable to this project are subject to annual adjustments each July 1st for the duration of the project.

Each contractor shall pay the annual adjusted prevailing wage rate that is in effect each July 1st, as posted by the Department of Labor.

It is the contractor's responsibility to obtain the annual adjusted prevailing wage rate increases directly from the Department of Labor's website.

The annual adjustments will be posted on the Department of Labor's Web page: www.ct.gov/dol.

The Department of Labor will continue to issue the initial prevailing wage rate schedule to the Contracting Agency for the project.

All subsequent annual adjustments will be posted on our Web Site for contractor access.

Contracting Agencies are under no obligation pursuant to State labor law to pay any increase due to the annual adjustment provision.

As of: Wednesday, January 29, 2014

Project: Rehabilitation Of Metro North Railroad Bridge Number 03948R Over Sound Beach Avenue And Bridge Number 03955R Over Tomac Avenue

Effective October 1, 2005 - Public Act 05-50: any person performing the work of any mechanic, laborer, or worker shall be paid prevailing wage

All Person who perform work ON SITE must be paid prevailing wage for the appropriate mechanic, laborer, or worker classification.

All certified payrolls must list the hours worked and wages paid to All Persons who perform work ON SITE regardless of their ownership i.e.: (Owners, Corporate Officers, LLC Members, Independent Contractors, et. al)

Reporting and payment of wages is required regardless of any contractual relationship alleged to exist between the contractor and such person.

~~Unlisted classifications needed for work not included within the scope of the classifications listed may be added after award only as provided in the labor standards contract clause (29 CFR 5.5 (a) (1) (ii)).

Please direct any questions which you may have pertaining to classification of work and payment of prevailing wages to the Wage and Workplace Standards Division, telephone (860)263-6790.

As of: Wednesday, January 29, 2014

Connecticut Department of Labor
Wage and Workplace Standards Division
FOOTNOTES

Please Note: If the "Benefits" listed on the schedule for the following occupations includes a letter(s) (+ a or + a+b for instance), refer to the information below.

Benefits to be paid at the appropriate prevailing wage rate for the listed occupation.

If the "Benefits" section for the occupation lists only a dollar amount, disregard the information below.

Bricklayers, Cement Masons, Cement Finishers, Concrete Finishers, Stone Masons
(Building Construction) and
(Residential- Hartford, Middlesex, New Haven, New London and Tolland Counties)

a. Paid Holiday: Employees shall receive 4 hours for Christmas Eve holiday provided the employee works the regularly scheduled day before and after the holiday. Employers may schedule work on Christmas Eve and employees shall receive pay for actual hours worked in addition to holiday pay.

Elevator Constructors: Mechanics

a. Paid Holidays: New Year's Day, Memorial Day, Independence Day, Labor Day, Veterans' Day, Thanksgiving Day, Christmas Day, plus the Friday after Thanksgiving.

b. Vacation: Employer contributes 8% of basic hourly rate for 5 years or more of service or 6% of basic hourly rate for 6 months to 5 years of service as vacation pay credit.

Glaziers

a. Paid Holidays: Labor Day and Christmas Day.

Power Equipment Operators
(Heavy and Highway Construction & Building Construction)

a. Paid Holidays: New Year's Day, Good Friday, Memorial day, Independence Day, Labor Day, Thanksgiving Day and Christmas Day, provided the employee works 3 days during the week in which the holiday falls, if scheduled, and if scheduled, the working day before and the working day after the holiday. Holidays falling on Saturday may be observed on Saturday, or if the employer so elects, on the preceding Friday.

Ironworkers

a. Paid Holiday: Labor Day provided employee has been on the payroll for the 5 consecutive work days prior to Labor Day.

Laborers (Tunnel Construction)

a. Paid Holidays: New Year's Day, Memorial Day, Independence Day, Labor Day, Thanksgiving Day and Christmas Day. No employee shall be eligible for holiday pay when he fails, without cause, to work the regular work day preceding the holiday or the regular work day following the holiday.

Roofers

a. Paid Holidays: July 4th, Labor Day, and Christmas Day provided the employee is employed 15 days prior to the holiday.

Sprinkler Fitters

a. Paid Holidays: Memorial Day, July 4th, Labor Day, Thanksgiving Day and Christmas Day, provided the employee has been in the employment of a contractor 20 working days prior to any such paid holiday.

Truck Drivers

(Heavy and Highway Construction & Building Construction)

a. Paid Holidays: New Year's Day, Memorial Day, Independence Day, Labor Day, Thanksgiving Day, Christmas day, and Good Friday, provided the employee has at least 31 calendar days of service and works the last scheduled day before and the first scheduled day after the holiday, unless excused.

Information Bulletin
Occupational Classifications

The Connecticut Department of Labor has the responsibility to properly determine "job classification" on prevailing wage projects covered under C.G.S. Section 31-53.

Note: This information is intended to provide a sample of some occupational classifications for guidance purposes only. It is not an all-inclusive list of each occupation's duties. This list is being provided only to highlight some areas where a contractor may be unclear regarding the proper classification.

Below are additional clarifications of specific job duties performed for certain classifications:

- **ASBESTOS WORKERS**

  Applies all insulating materials, protective coverings, coatings and finishes to all types of mechanical systems.

- **ASBESTOS INSULATOR**

  Handle, install apply, fabricate, distribute, prepare, alter, repair, dismantle, heat and frost insulation, including penetration and fire stopping work on all penetration fire stop systems.

- **BOILERMAKERS**

  Erects hydro plants, incomplete vessels, steel stacks, storage tanks for water, fuel, etc. Builds incomplete boilers, repairs heat exchanges and steam generators.

- **BRICKLAYERS, CEMENT MASONS, CEMENT FINISHERS, MARBLE MASONS, PLASTERERS, STONE MASONS, PLASTERERS. STONE MASONS, TERRAZZO WORKERS, TILE SETTERS**

  Lays building materials such as brick, structural tile and concrete cinder, glass, gypsum, terra cotta block. Cuts, tools and sets marble, sets stone, finishes concrete, applies decorative steel, aluminum and plastic tile, applies cements, sand, pigment and marble chips to floors, stairways, etc.

- **CARPENTERS, MILLWRIGHTS. PILEDRIVERMEN. LATHERS. RESILEINT FLOOR LAYERS, DOCK BUILDERS, DIKERS, DIVER TENDERS**

  Constructs, erects, installs and repairs structures and fixtures of wood, plywood and wallboard. Installs, assembles, dismantles, moves industrial machinery. Drives piling into ground to provide foundations for structures such as buildings and bridges, retaining walls for earth embankments, such as cofferdams. Fastens wooden, metal or rockboard lath to walls, ceilings and partitions of buildings, acoustical tile layer, concrete form builder. Applies firestopping materials on fire resistive joint systems only. Installation of curtain/window walls only where attached to wood or metal studs. Installation of insulated material of all types whether blown, nailed or attached in other ways to walls, ceilings and floors of buildings. Assembly and installation of modular furniture/furniture systems. Free-standing furniture is not covered. This includes free standing: student chairs, study top desks, book box desks, computer furniture, dictionary stand, atlas stand, wood shelving, two-position information access station, file cabinets, storage cabinets, tables, etc.

- **CLEANING LABORER**

  The clean up of any construction debris and the general cleaning, including sweeping, wash down, mopping, wiping of the construction facility, washing, polishing, dusting, etc., prior to the issuance of a certificate of occupancy falls under the *Labor classification.*

- **DELIVERY PERSONNEL**

  If delivery of supplies/building materials is to one common point and stockpiled there, prevailing wages are not required. If the delivery personnel are involved in the distribution of the material to multiple locations within the construction site then they would have to be paid prevailing wages for the type of work performed: laborer, equipment operator, electrician, ironworker, plumber, etc.

  An example of this would be where delivery of drywall is made to a building and the delivery personnel distribute the drywall from one "stockpile" location to further sub-locations on each floor. Distribution of material around a construction site is the job of a laborer/tradesman and not a delivery personnel.

- **ELECTRICIANS**

  Install, erect, maintenance, alteration or repair of any wire, cable, conduit, etc., which generates, transforms, transmits or uses electrical energy for light, heat, power or other purposes, including the Installation or maintenance of telecommunication, LAN wiring or computer equipment, and low voltage wiring. ***License required per Connecticut General Statutes: E-1,2 L-5,6 C-5,6 T-1,2 L-1,2 V-1,2,7,8,9.**

- **ELEVATOR CONSTRUCTORS**

  Install, erect, maintenance and repair of all types of elevators, escalators, dumb waiters and moving walks. ***License required by Connecticut General Statutes: R-1,2,5,6.**

- **FORK LIFT OPERATOR**

  Laborers Group 4) Mason Tenders - operates forklift solely to assist a mason to a maximum height of nine (9) feet only.

  Power Equipment Operator Group 9 - operates forklift to assist any trade, and to assist a mason to a height over nine (9) feet.

- **GLAZIERS**

  Glazing wood and metal sash, doors, partitions, and 2 story aluminum storefronts. Installs glass windows, skylights, store fronts and display cases or surfaces such as building fronts, interior walls, ceilings and table tops and metal store fronts. Installation of aluminum window walls and curtain walls is the "joint" work of glaziers and ironworkers which requires either a blended rate or equal composite workforce.

- **IRONWORKERS**

  Erection, installation and placement of structural steel, precast concrete, miscellaneous iron, ornamental iron, metal curtain wall, rigging and reinforcing steel. Handling, sorting, and installation of reinforcing steel (rebar). Metal bridge rail (traffic), metal bridge handrail, and decorative security fence installation. Installation of aluminum window walls and curtain walls is the "joint" work of glaziers and ironworkers which requires either a blended rate or equal composite workforce. Insulated metal and insulated composite panels are still installed by the Ironworker.

- **INSULATOR**

  Installing fire stopping systems/materials for "Penetration Firestop Systems": transit to cables, electrical conduits, insulated pipes, sprinkler pipe penetrations, ductwork behind radiation, electrical cable trays, fire rated pipe penetrations, natural polypropylene, HVAC ducts, plumbing bare metal, telephone and communication wires, and boiler room ceilings. Past practice using the applicable licensed trades, Plumber, Sheet Metal, Sprinkler Fitter, and Electrician, is not inconsistent with the Insulator classification and would be permitted.

- **LABORERS**

  Acetylene burners, asphalt rakers, chain saw operators, concrete and power buggy operator, concrete saw operator, fence and guard rail erector (except metal bridge rail (traffic), metal bridge handrail, and decorative security fence installation.), hand operated concrete vibrator operator, mason tenders, pipelayers (installation of storm drainage or sewage lines on the street only), pneumatic drill operator, pneumatic gas and electric drill operator, powermen and wagon drill operator, air track operator, block paver, curb setters, blasters, concrete spreaders.

- **PAINTERS**

  Maintenance, preparation, cleaning, blasting (water and sand, etc.), painting or application of any protective coatings of every description on all bridges and appurtenances of highways, roadways, and railroads. Painting, decorating, hardwood finishing, paper hanging, sign writing, scenic art work and drywall hhg for any and all types of building and residential work.

- **LEAD PAINT REMOVAL**

  Painter's Rate
  1. Removal of lead paint from bridges.
  2. Removal of lead paint as preparation of any surface to be repainted.
  3. Where removal is on a Demolition project prior to reconstruction.

  Laborer's Rate
  1. Removal of lead paint from any surface NOT to be repainted.
  2. Where removal is on a *TOTAL* Demolition project only.

- **PLUMBERS AND PIPEFITTERS**

  Installation, repair, replacement, alteration or maintenance of all plumbing, heating, cooling and piping. ***License required per Connecticut General Statutes: P-1,2,6,7,8,9 J-1,2,3,4 SP-1,2 S-1,2,3,4,5,6,7,8 B-1,2,3,4 D-1,2,3,4.***

- **POWER EQUIPMENT OPERATORS**

  Operates several types of power construction equipment such as compressors, pumps, hoists, derricks, cranes, shovels, tractors, scrapers or motor graders, etc. Repairs and maintains equipment. ***License required, crane operators only, per Connecticut General Statutes.**

- **ROOFERS**

  Covers roofs with composition shingles or sheets, wood shingles, slate or asphalt and gravel to waterproof roofs, including preparation of surface. (tear-off and/or removal of any type of roofing and/or clean-up of any and all areas where a roof is to be relaid)

- **SHEETMETAL WORKERS**

  Fabricate, assembles, installs and repairs sheetmetal products and equipment in such areas as ventilation, air-conditioning, warm air heating, restaurant equipment, architectural sheet metal work, sheetmetal roofing, and aluminum gutters. Fabrication, handling, assembling, erecting, altering, repairing, etc. of coated metal material panels and composite metal material panels when used on building exteriors and interiors as soffits, facia, louvers, partitions, wall panel siding, canopies, cornice, column covers, awnings, beam covers, cladding, sun shades, lighting troughs, spires, ornamental roofing, metal ceilings, mansards, copings, ornamental and ventilation hoods, vertical and horizontal siding panels, trim, etc. The sheet metal classification also applies to the vast variety of coated metal material panels and composite metal material panels that have evolved over the years as an alternative to conventional ferrous and non-ferrous metals like steel, iron, tin, copper, brass, bronze, aluminum, etc. Insulated metal and insulated composite panels are still installed by the Iron Worker. Fabrication, handling, assembling, erecting, altering, repairing, etc. of architectural metal roof, standing seam roof, composite metal roof, metal and composite bathroom/toilet partitions, aluminum gutters, metal and composite lockers and shelving, kitchen equipment, and walk-in coolers.

- **SPRINKLER FITTERS**

  Installation, alteration, maintenance and repair of fire protection sprinkler systems. ***License required per Connecticut General Statutes: F-1,2,3,4.**

- **TILE MARBLE AND TERRAZZO FINISHERS**

  Assists and tends the tile setter, marble mason and terrazzo worker in the performance of their duties.

- **TRUCK DRIVERS**

Definitions:

1) "Site of the work" (29 Code of Federal Regulations (CFR) 5.2(l)(b) is the physical place or places where the building or work called for in the contract will remain and any other site where a significant portion of the building or work is constructed, provided that such site is established specifically for the performance of the contact or project;

(a) Except as provided in paragraph (l) (3) of this section, job headquarters, tool yards, batch plants, borrow pits, etc. are part of the "site of the work"; provided they are dedicated exclusively, or nearly so, to the performance of the contract or project, and provided they are adjacent to "the site of work" as defined in paragraph (e)(1) of this section;

(b) Not included in the "site of the work" are permanent home offices, branch plant establishments, fabrication plants, tool yards etc, of a contractor or subcontractor whose location and continuance in operation are determined wholly without regard to a particular State or political subdivision contract or uncertain and indefinite periods of time involved of a few seconds or minutes duration and where the failure to count such time is due to consideration justified by industrial realities (29 CFR 785.47)

2) "Engaged to wait" is waiting time that belongs to and is controlled by the employer which is an integral part of the job and is therefore compensable as hours worked. (29 CFR 785.15)

3) "Waiting to be engaged" is waiting time that an employee can use effectively for their own purpose and is not compensable as hours worked. (29 CFR 785.16)

4) "De Minimus" is a rule that recognizes that unsubstantial or insignificant periods of time which cannot as a practical administrative matter be precisely recorded for payroll purposes, may be disregarded. This rule applies only where there are uncertain and indefinite periods of time involved of a short duration and where the failure to count such time is due to consideration justified by worksite realities. For example, with respect to truck drivers on prevailing wage sites, this is typically less than 15 minutes at a time.

Coverage of Truck Drivers on State or Political subdivision Prevailing Wage Projects

Truck drivers <u>are covered</u> for payroll purposes under the following conditions:

- Truck Drivers for time spent working on the site of the work.

- Truck Drivers for time spent loading and/or unloading materials and supplies on the site of the work, if such time is not de minimus

- Truck drivers transporting materials or supplies between a facility that is deemed part of the site of the work and the actual construction site.

- Truck drivers transporting portions of the building or work between a site established specifically for the performance of the contract or project where a significant portion of such building or work is constructed and the physical places where the building or work outlined in the contract will remain.

For example: Truck drivers delivering asphalt are covered under prevailing wage while" engaged to wait" on the site and when directly involved in the paving operation, provided the total time is not "de minimus"

Truck Drivers <u>are not</u> covered in the following instances:

- Material delivery truck drivers while off "the site of the work"

- Truck Drivers traveling between a prevailing wage job and a commercial supply facility while they are off the "site of the work"

- Truck drivers whose time spent on the "site of the work" is de minimus, such as under 15 minutes at a time, merely to drop off materials or supplies, including asphalt.

These guidelines are similar to U.S. Labor Department policies. The application of these guidelines may be subject to review based on factual considerations on a case by case basis.

For example:

- Material men and deliverymen are not covered under prevailing wage as long as they are not directly involved in the construction process. If, they unload the material, they would then be covered by prevailing wage for the classification they are performing work in: laborer, equipment operator, etc.
- Hauling material off site is not covered provided they are not dumping it at a location outlined above.
- Driving a truck on site and moving equipment or materials on site would be considered covered work, as this is part of the construction process.

Any questions regarding the proper classification should be directed to:
Public Contract Compliance Unit
Wage and Workplace Standards Division
Connecticut Department of Labor
200 Folly Brook Blvd, Wethersfield, CT 06109
(860) 263-6543

Statute 31-55a

Last Updated: June 02, 2008

- Special Notice -

To All State and Political Subdivisions,Their Agents, and Contractors

Connecticut General Statute 31-55a - Annual adjustments to wage rates by contractors doing state work.

Each contractor that is awarded a contract on or after October 1, 2002, for (1) the construction of a state highway or bridge that falls under the provisions of section 31-54 of the general statutes, or (2) the construction, remodeling, refinishing, refurbishing, rehabilitation, alteration or repair of any public works project that falls under the provisions of section 31-53 of the general statutes shall contact the Labor Commissioner on or before July first of each year, for the duration of such contract, to ascertain the prevailing rate of wages on an hourly basis and the amount of payment or contributions paid or payable on behalf of each mechanic, laborer or worker employed upon the work contracted to be done, and shall make any necessary adjustments to such prevailing rate of wages and such payment or contributions paid or payable on behalf of each such employee, effective each July first.

- The prevailing wage rates applicable to any contract or subcontract awarded on or after October 1, 2002 are subject to annual adjustments each July 1st for the duration of any project which was originally advertised for bids on or after October 1, 2002.
- Each contractor affected by the above requirement shall pay the annual adjusted prevailing wage rate that is in effect each July 1st, as posted by the Department of Labor.
- It is the ***contractor's*** responsibility to obtain the annual adjusted prevailing wage rate increases directly from the Department of Labor's Web Site. The annual adjustments will be posted on the Department of Labor Web page: www.ctdol.state.ct.us. For those without internet access, please contact the division listed below.
- The Department of Labor will continue to issue the initial prevailing wage rate schedule to the Contracting Agency for the project. All subsequent annual adjustments will be posted on our Web Site for contractor access.

Any questions should be directed to the Contract Compliance Unit, Wage and Workplace

Standards Division, Connecticut Department of Labor, 200 Folly Brook Blvd., Wethersfield, CT 06109 at (860)263-6790.

Workplace Laws

Published by the Connecticut Department of Labor, Project Management Office

November 29, 2006

Notice

To All Mason Contractors and Interested Parties Regarding Construction Pursuant to Section 31-53 of the Connecticut General Statutes (Prevailing Wage)

The Connecticut Labor Department Wage and Workplace Standards Division is empowered to enforce the prevailing wage rates on projects covered by the above referenced statute.

Over the past few years the Division has withheld enforcement of the rate in effect for workers who operate a forklift on a prevailing wage rate project due to a potential jurisdictional dispute.

The rate listed in the schedules and in our Occupational Bulletin (see enclosed) has been as follows:

Forklift Operator:

- **Laborers (Group 4) Mason Tenders -** operates forklift solely to assist a mason to a maximum height of nine feet only.

- **Power Equipment Operator (Group 9) -** operates forklift to assist any trade and to assist a mason to a height over nine feet.

The U.S. Labor Department conducted a survey of rates in Connecticut but it has not been published and the rate in effect remains as outlined in the above Occupational Bulletin.

Since this is a classification matter and not one of jurisdiction, effective January 1, 2007 the Connecticut Labor Department will enforce the rate on each schedule in accordance with our statutory authority.

Your cooperation in filing appropriate and accurate certified payrolls is appreciated.

Informational Bulletin

THE 10-HOUR OSHA CONSTRUCTION SAFETY AND HEALTH COURSE

(applicable to public building contracts entered into *on or after July 1, 2007,* where the total cost of all work to be performed is at least $100,000)

(1) This requirement was created by Public Act No. 06-175, which is codified in Section 31-53b of the Connecticut General Statutes (pertaining to the prevailing wage statutes);

(2) The course is required for public building construction contracts (projects funded in whole or in part by the state or any political subdivision of the state) entered into on or after July 1, 2007;

(3) It is required of private employees (not state or municipal employees) and apprentices who perform manual labor for a general contractor or subcontractor on a public building project where the total cost of all work to be performed is at least $100,000;

(4) The ten-hour construction course pertains to the ten-hour Outreach Course conducted in accordance with federal OSHA Training Institute standards, and, for telecommunications workers, a ten-hour training course conducted in accordance with federal OSHA standard, 29 CFR 1910.268;

(5) The internet website for the federal OSHA Training Institute is http://www.osha.gov/fso/ote/training/edcenters/fact_sheet.html;

(6) The statutory language leaves it to the contractor and its employees to determine who pays for the cost of the ten-hour Outreach Course;

(7) Within 30 days of receiving a contract award, a general contractor must furnish proof to the Labor Commissioner that all employees and apprentices performing manual labor on the project will have completed such a course;

(8) Proof of completion may be demonstrated through either: (a) the presentation of a *bona fide* student course completion card issued by the federal OSHA Training Institute; *or* (2) the presentation of documentation provided to an employee by a trainer certified by the Institute pending the actual issuance of the completion card;

(9) Any card with an issuance date more than 5 years prior to the commencement date of the construction project shall not constitute proof of compliance;

(10) Each employer shall affix a copy of the construction safety course completion card to the certified payroll submitted to the contracting agency in accordance with Conn. Gen. Stat. § 31-53(f) on which such employee's name first appears;

(11) Any employee found to be in non-compliance shall be subject to removal from the worksite if such employee does not provide satisfactory proof of course completion to the Labor Commissioner by the fifteenth day after the date the employee is determined to be in noncompliance;

(12) Any such employee who is determined to be in noncompliance may continue to work on a public building construction project for a maximum of fourteen consecutive calendar days while bringing his or her status into compliance;

(13) The Labor Commissioner may make complaint to the prosecuting authorities regarding any employer or agent of the employer, or officer or agent of the corporation who files a false certified payroll with respect to the status of an employee who is performing manual labor on a public building construction project;

(14) The statute provides the minimum standards required for the completion of a safety course by manual laborers on public construction contracts; any contractor can exceed these minimum requirements; and

(15) Regulations clarifying the statute are currently in the regulatory process, and shall be posted on the CTDOL website as soon as they are adopted in final form.

(16) Any questions regarding this statute may be directed to the Wage and Workplace Standards Division of the Connecticut Labor Department via the internet website of http://www.ctdol.state.ct.us/wgwkstnd/wgemenu.htm; or by telephone at (860)263-6790.

THE ABOVE INFORMATION IS PROVIDED EXCLUSIVELY AS AN EDUCATIONAL RESOURCE, AND IS NOT INTENDED AS A SUBSTITUTE FOR LEGAL INTERPRETATIONS WHICH MAY ULTMATELY ARISE CONCERNIG THE CONSTRUCTION OF THE STATUTE OR THE REGULATIONS.

Sec. 31-53b. **Construction safety and health course**. **Proof of completion required for employees on public building projects. Enforcement. Regulations**. (a) Each contract entered into on or after July 1, 2007, for the construction, remodeling, refinishing, refurbishing, rehabilitation, alteration or repair of any public building project by the state or any of its agents, or by an political subdivision of the state or any of its agents, where the total cost of all work to be performed by all contractors and subcontractors in connection with the contract is at least one hundred thousand dollars, shall contain a provision requiring that, not later than thirty days after the date such contract is awarded, each contractor furnish proof to the Labor Commissioner that all employees performing manual labor on or in such public building, pursuant to such contract, have completed a course of at least ten hours in duration in construction safety and health approved by the federal Occupational Safety and Health Administration or, in the case of telecommunications employees, have completed at least ten hours of training in accordance with 29 CFR 1910.268.

(b) Any employee required to complete a construction safety and health course required under subsection (a) of this section who has not completed the course shall be subject to removal from the worksite if the employee does not provide documentation of having completed such course by the fifteenth day after the date the employee is found to be in noncompliance. The Labor Commissioner or said commissioner's designee shall enforce this section.

(c) Not later than January 1, 2007, the Labor Commissioner shall adopt regulations, in accordance with the provisions of chapter 54, to implement the provisions of subsections (a) and (b) of this section. Such regulations shall require that the ten-hour construction safety and health courses required under subsection (a) of this section be conducted in accordance with federal Occupational Safety and Health Administration Training Institute standards, or in accordance with 29 CFR 1910.268, as appropriate. The Labor Commissioner shall accept as sufficient proof of compliance with the provisions of subsection (a) or (b) of this section a student course completion card issued by the federal Occupational Safety and Health Administration Training Institute, or such other proof of compliance said commissioner deems appropriate, dated no earlier than five years before the commencement date of such public works project.

(d) For the purposes of this section, "public building" means a structure, paid for in whole or in part with state funds, within a roof and within exterior walls or fire walls, designed for the housing, shelter, enclosure and support or employment of people, animals or property of any kind, including, but not limited to, sewage treatment plants and water treatment plants, "Public building" does not include site work, roads or bridges, rail lines, parking lots or underground water, sewer or drainage systems including pump houses or other utility systems.

CONNECTICUT DEPARTMENT OF LABOR
WAGE AND WORKPLACE STANDARDS DIVISION

CONTRACTORS WAGE CERTIFICATION FORM

I,_____of _____
Officer, Owner, Authorized Rep. Company Name

do hereby certify that the _____
Company Name

_____
Street

_____
City

and all of its subcontractors will pay all workers on the

_____
Project Name and Number

_____
Street and City

the wages as listed in the schedule of prevailing rates required for such project (a copy of which is attached hereto).

_____
Signed

Subscribed and sworn to before me this _____ day of _____,

_____
Notary Public

☞ Return to:

Connecticut Department of Labor
Wage & Workplace Standards Division
200 Folly Brook Blvd.
Wethersfield, CT 06109