STATE BRIDGE No. 03948R

SOUND BEACH AVE. (31.29)

RATING SUMMARY TABLE			
ELEMENT	RATING FORCE	COOPER E80 RATING	
		NORMAL	MAXIMUM
GIRDER FASCIA	MOMENT	E100	E158
	SHEAR	E202	E364
GIRDER INTERIOR	MOMENT	E83	E134
	SHEAR	E139	E255

CONCRETE DISTRIBUTION	
SUPERSTRUCTURE	0.0 CY
SUBSTRUCTURE	60.0 CY
FOOTINGS	0.0 CY
PLATFORM AND STAIR FOOTINGS	74.0 CY
C.I.P. STAIRS	16.0 CY
TOTAL	150.0 CY

GIRDER SHIPPING DATA				
GIRDER TYPE	HEIGHT	WIDTH	LENGTH	WEIGHT (LBS)
FASCIA	3'-10"	1'-6"	56'-2"	27,566
INTERIOR	3'-10"	2'-0"	56'-2"	47,651

NOTICE TO BRIDGE INSPECTORS	
THE DEPARTMENT'S BRIDGE SAFETY PROCEDURES REQUIRE THIS BRIDGE TO BE INSPECTED FOR, BUT NOT LIMITED TO, ALL APPROPRIATE COMPONENTS INDICATED IN THE GOVERNING MANUALS FOR BRIDGE INSPECTION, (THE LISTING OF COMPONENTS FOR SPECIFIC ATTENTION SHALL NOT BE CONSTRUED TO REDUCE THE IMPORTANCE OF INSPECTION OF ANY OTHER COMPONENT OF THE STRUCTURE). THE FREQUENCY OF INSPECTION OF THIS STRUCTURE SHALL BE IN ACCORDANCE WITH THE GOVERNING MANUALS FOR BRIDGE INSPECTION, UNLESS OTHERWISE DIRECTED BY THE MANAGER OF BRIDGE SAFETY AND EVALUATION.	
COMPONENT OR DETAIL	BRIDGE SHEET REFERENCE
GIRDERS	SUBSET 05, S-33

ESTIMATED WEIGHTS AND LENGTHS				
SITE NO.	BRIDGE NO.	NO. OF SPANS**	EST. WEIGHT OF STRUCT. STEEL* (CWT)	LENGTH OF BRIDGE** (FEET)
1	03948R	1	3,742	54

*ESTIMATED VALUES INCLUDE ALLOWABLE OVERRUNS OR WASTE.

**SPAN LENGTHS ARE BASED ON CENTER TO CENTER OF BEARINGS.

CATENARY WIRE HEIGHTS*		CATENARY TOWER NUMBER:		
		335	336	337
TRACK 3	CONTACT WIRE HT. H.R.L.	17'-2"	17'-4"	17'-6"
	MESSENGER WIRE HT. H.R.L.	20'-11"	20'-10"	21'-0"
	UNDERSIDE OF TRUSS TO H.R.L.	22'-1"	22'-4"	22'-1"
TRACK 1	CONTACT WIRE HT. H.R.L.	17'-2"	17'-4"	17'-6"
	MESSENGER WIRE HT. H.R.L.	20'-11"	20'-10"	21'-0"
	UNDERSIDE OF TRUSS TO H.R.L.	22'-1"	22'-4"	22'-1"
TRACK 2	CONTACT WIRE HT. H.R.L.	17'-2"	17'-4"	17'-6"
	MESSENGER WIRE HT. H.R.L.	20'-11"	20'-10"	21'-0"
	UNDERSIDE OF TRUSS TO H.R.L.	22'-1"	22'-4"	22'-1"
TRACK 4	CONTACT WIRE HT. H.R.L.	17'-2"	17'-4"	17'-6"
	MESSENGER WIRE HT. H.R.L.	20'-11"	20'-10"	21'-0"
	UNDERSIDE OF TRUSS TO H.R.L.	22'-1"	22'-4"	22'-1"

*INFORMATION OBTAINED FROM CONTRACT DOCUMENTS "CATENARY REPLACEMENT BETWEEN STRUCTURES 236 AND 356A" AS-BUILT DRAWINGS DATED 5/9/06, DWG NO. L-36AB.

CATENARY WIRE HEIGHTS DIFFER AT BRIDGE LOCATION DUE TO SAG IN WIRE. CONTRACTOR SHALL SURVEY ACTUAL HEIGHT.

THIS INFORMATION, INCLUDING ESTIMATED QUANTITIES OF WORK, SHOWN ON THESE SHEETS IS BASED ON LIMITED INVESTIGATION BY THE STATE AND IS IN NO WAY WARRANTED TO INDICATE THE TRUE CONDITIONS OF ACTUAL QUANTITIES OR DISTRIBUTION OF QUANTITIES OF WORK WHICH WILL BE REQUIRED

STATE OF CONNECTICUT
ARTHUR J. DICESARE
LICENSED
PROFESSIONAL ENGINEER

Arthur DiCesare
2014.03.07
14:27:49-05'00'

ADDENDUM NO. 1

REV.	DATE	REVISION DESCRIPTION	SHEET NO.
A1	02/25/14	ENTIRE SHEET REPLACED	05.03.A1

THE INFORMATION, INCLUDING ESTIMATED QUANTITIES OF WORK, SHOWN ON THESE SHEETS IS BASED ON LIMITED INVESTIGATIONS BY THE STATE AND IS IN NO WAY WARRANTED TO INDICATE THE CONDITIONS OF ACTUAL QUANTITIES OF WORK WHICH WILL BE REQUIRED.

Plotted Date: 3/7/2014

DESIGNER/DRAFTER: **S.Yarmolinsky, P.E.**
CHECKED BY: **A.DiCesare, P.E.**

STATE OF CONNECTICUT
DEPARTMENT OF TRANSPORTATION

Filename: ...\SB_MSH_Br03948_0301_0092_S-02.dgn

SIGNATURE/BLOCK: ADA — A.DiCesare Associates, P.C. 690 Clinton Avenue Bridgeport, CT 06604 203-696-0444 www.adicesarepc.com
APPROVED BY: A.DiCesare
DATE: 11/27/2013

PROJECT TITLE: **REHABILITATION OF METRO-NORTH RAILROAD BRIDGE NO. 03948R AND BRIDGE NO. 03955R**

TOWN: **GREENWICH**

DRAWING TITLE: **GENERAL NOTES - 2**

PROJECT NO. **301-092**
DRAWING NO. **S-02**
SHEET NO. **05.03.A1**

Connecticut Department of Transportation
QA/QC Format Check

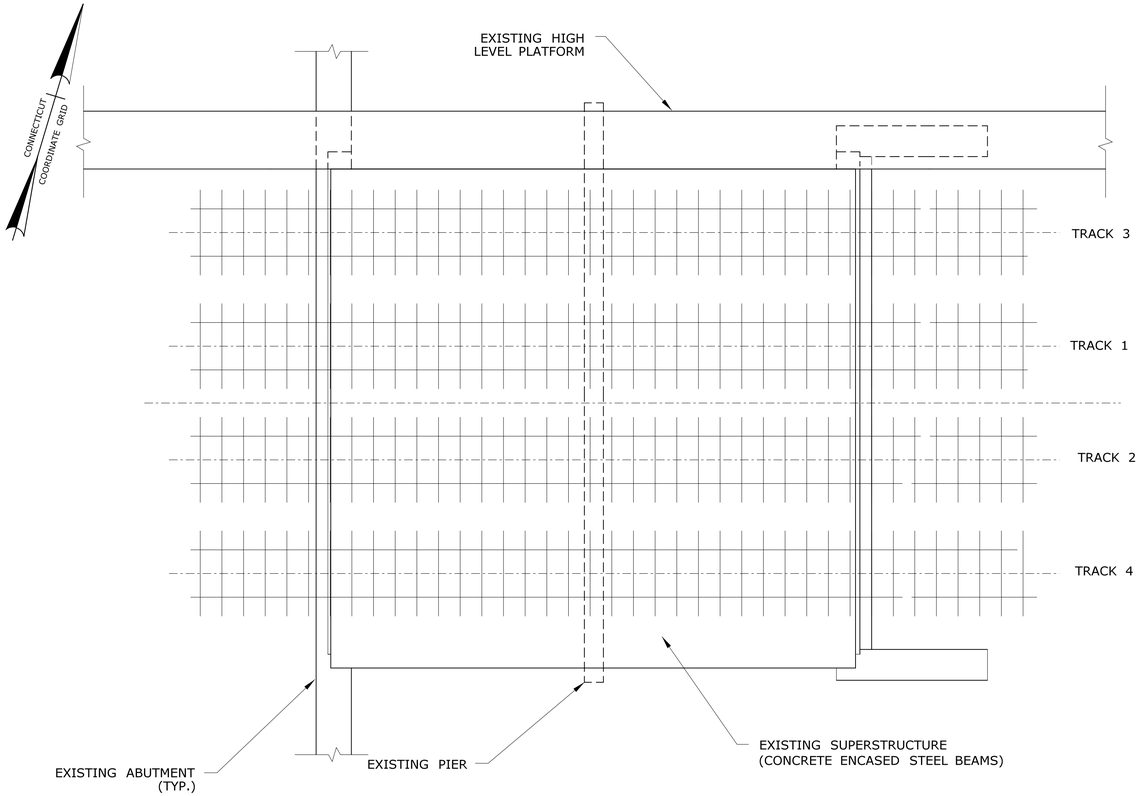

EXISTING CONDITION-PLAN

SCALE: 1/8"=1'-0"

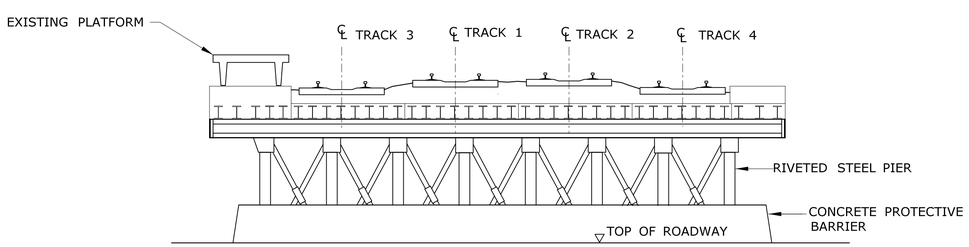

EXISTING CONDITION-SECTION

SCALE: 1/8" = 1'-0"

SEQUENCE OF OPERATIONS

STAGE 1: TAKE TRACK 2 OUT OF SERVICE (BY MNRR FORCES). REPLACE BALLAST WITH TEMPORARY TIMBER SUPPORTS UNDER EACH TIE (BY MNRR FORCES) SEE DETAILS ON DWG. NO. S-29. CUT BRIDGE DECK BENEATH TRACK 2 SEPARATING TWO SOUTHERNMOST ENCASED BEAMS FROM THE DECK (BY CONTRACTOR). TEMPORARY TIMBER SUPPORTS SHOULD EXTEND ACROSS SIX REMAINING BEAMS. PRECAUTIONS MUST BE TAKEN TO MAINTAIN BALLAST UNDER NEIGHBORING TRACKS. INSTALL TEMPORARY TRESTLE SUPPORTING REMAINING PORTION OF TRACK 2 SUPERSTRUCTURE (SIX ENCASED BEAMS - BY CONTRACTOR). PLACE TRACK 2 BACK INTO SERVICE (BY MNRR FORCES).

STAGE 2: TAKE TRACK 4, AS WELL AS STAIRWAYS SERVING TRACK 4 OUT OF SERVICE (BY MNRR FORCES). REMOVE EXISTING SUPERSTRUCTURE OF TRACK 4 AND TWO SOUTHERNMOST ENCASED BEAMS OF TRACK 2 (BY CONTRACTOR). REMOVE EXISTING STAIRWAYS, REMOVE PORTION OF EXISTING PIER AND ITS FOUNDATION AS REQUIRED (BY CONTRACTOR). INSTALL TEMPORARY SOLDIER PILE AND LAGGING (RAILROAD) BETWEEN TRACK 4 AND TRACK 2 (BY CONTRACTOR). REBUILD ABUTMENT BACKWALLS AND BRIDGE SEATS (BY CONTRACTOR). INSTALL TRACK 4 SUPERSTRUCTURE (BY CONTRACTOR), INSTALL BALLAST AND TRACK (BY CONTRACTOR AND MNRR FORCES). INSTALL NEW HIGH LEVEL PLATFORM AND RECONSTRUCT STAIRWAYS SERVING TRACK 4 (BY CONTRACTOR). PLACE TRACK 4 BACK INTO SERVICE (BY MNRR FORCES).

STAGE 3: TAKE TRACK 1 OUT OF SERVICE (BY MNRR FORCES). REPLACE BALLAST WITH TEMPORARY TIMBER SUPPORTS UNDER EACH TIE (BY MNRR FORCES) SEE DETAILS ON DWG. NO. S-29. CUT BRIDGE DECK BENEATH TRACK 1 SEPARATING TWO SOUTHERNMOST ENCASED BEAMS FROM THE DECK (BY CONTRACTOR). TEMPORARY TIMBER SUPPORTS SHOULD EXTEND ACROSS SIX REMAINING BEAMS. PRECAUTIONS MUST BE TAKEN TO MAINTAIN BALLAST UNDER NEIGHBORING TRACKS. INSTALL TEMPORARY TRESTLE SUPPORTING REMAINING PORTION OF TRACK 1 SUPERSTRUCTURE (SIX STEEL BEAMS - BY CONTRACTOR). PLACE TRACK 1 BACK INTO SERVICE (BY MNRR FORCES).

STAGE 4: TAKE TRACK 2 OUT OF SERVICE (BY MNRR FORCES). REMOVE EXISTING SUPERSTRUCTURE OF TRACK 2 AND TWO SOUTHERNMOST ENCASED BEAMS OF TRACK 1 (BY CONTRACTOR). REMOVE PORTION OF EXISTING PIER AND ITS FOUNDATION AS REQUIRED (BY CONTRACTOR). INSTALL TEMPORARY SOLDIER PILE AND LAGGING (RAILROAD) BETWEEN TRACK 2 AND TRACK 1 (BY CONTRACTOR). REBUILD ABUTMENT BACKWALLS AND BRIDGE SEATS (BY CONTRACTOR). INSTALL TRACK 2 SUPERSTRUCTURE (BY CONTRACTOR), INSTALL BALLAST AND TRACK (BY CONTRACTOR AND MNRR FORCES). PLACE TRACK 2 BACK INTO SERVICE (BY MNRR FORCES).

STAGE 5: TAKE TRACK 3 OUT OF SERVICE (BY MNRR FORCES). REPLACE BALLAST WITH TEMPORARY TIMBER SUPPORTS UNDER EACH TIE (BY MNRR FORCES) SEE DETAILS ON DWG. NO. S-29. SAW CUT BRIDGE DECK BENEATH TRACK 3 SEPARATING TWO SOUTHERNMOST ENCASED BEAMS FROM THE REST OF THE DECK (BY CONTRACTOR). TEMPORARY TIMBER SUPPORTS SHOULD EXTEND ACROSS SIX REMAINING BEAMS. INSTALL TEMPORARY TRESTLE SUPPORTING REMAINING PORTION OF TRACK 3 SUPERSTRUCTURE (SIX STEEL BEAMS - THE TRESTLE MAY BE RELOCATED FROM TRACK 2 - BY CONTRACTOR). PLACE TRACK 3 BACK INTO SERVICE (BY MNRR FORCES).

STAGE 6: TAKE TRACK 1 OUT OF SERVICE (BY MNRR FORCES). REMOVE EXISTING SUPERSTRUCTURE OF TRACK 1 AND TWO SOUTHERNMOST ENCASED BEAMS OF TRACK 3 (BY CONTRACTOR). REMOVE PORTION OF EXISTING PIER AND ITS FOUNDATION AS REQUIRED (BY CONTRACTOR). INSTALL TEMPORARY SOLDIER PILE AND LAGGING (RAILROAD) BETWEEN TRACK 1 AND TRACK 3 (BY CONTRACTOR). REBUILD ABUTMENT BACKWALLS AND BRIDGE SEATS (BY CONTRACTOR). INSTALL TRACK 1 SUPERSTRUCTURE (BY CONTRACTOR), INSTALL BALLAST AND TRACK (BY CONTRACTOR AND MNRR FORCES). PLACE TRACK 1 BACK INTO SERVICE (BY MNRR FORCES).

STAGE 7: TAKE TRACK 3, AS WELL AS STAIRWAYS SERVING TRACK 3 OUT OF SERVICE (BY MNRR FORCES). REMOVE EXISTING SUPERSTRUCTURE OF TRACK 3 AS REQUIRED FOR NEW SUPERSTRUCTURE INSTALLATION (BY CONTRACTOR). REMOVE EXISTING STAIRWAYS, REMOVE REMAINING PORTION OF EXISTING PIER AND ITS FOUNDATION (BY CONTRACTOR). REBUILD ABUTMENT BACKWALLS AND BRIDGE SEATS (BY CONTRACTOR). INSTALL TRACK 3 SUPERSTRUCTURE (BY CONTRACTOR), INSTALL BALLAST AND TRACK (BY CONTRACTOR AND MNRR FORCES). INSTALL NEW HIGH LEVEL PLATFORM AND RECONSTRUCT STAIRWAYS, SERVING TRACK 3 (BY CONTRACTOR).

STAGE 8: REMOVE TEMPORARY SOLDIER PILE AND LAGGING (RAILROAD) BETWEEN TRACK 1 AND TRACK 3 (BY CONTRACTOR). PLACE TRACK 3 BACK INTO SERVICE (BY MNRR FORCES).

STAGE 9: COMPLETE ROADWAY WORK UNDER THE BRIDGE (BY CONTRACTOR).

NOTES:

1. CONSTRUCT LIGHTED PEDESTRIAN SIDEWALK ENCLOSURE PRIOR TO COMMENCEMENT OF CONSTRUCTION STAGING 1. REFER TO SPECIAL PROVISIONS ITEM #0502235A LIGHTED PEDESTRIAN SIDEWALK ENCLOSURES.
2. MAINTAIN SIDEWALK PASSAGEWAY ALONG SOUND BEACH AVENUE ON EITHER THE EAST OR WEST SIDE OR BOTH SIDES OF SOUND BEACH AVENUE ON A PAVED SIDEWALK OPEN AT ALL TIMES. WHEN REQUIRED, CLOSURE OF SIDEWALK PASSAGE TO PEDESTRIAN TRAFFIC SHALL BE MINIMIZED AND SHALL NOT EXTEND PASSED WORKING HOURS. SEE DETOUR PLAN DWG. NO. S-15 FOR SIGNING REQUIREMENTS.
3. CLOSURE OF SOUND BEACH AVENUE SHALL BE MINIMIZED AND SHALL NOT EXTEND PASSED WORKING HOURS. SEE DETOUR PLAN DWG. NO. S-15 FOR DETOUR SIGNAGE REQUIREMENTS. REFER TO ITEM #0971001A MAINTENANCE AND PROTECTION OF TRAFFIC.

ADDENDUM NO. 1

REV.	DATE	REVISION DESCRIPTION	SHEET NO.
A1	02/25/14	ENTIRE SHEET REPLACED	05.18.A1

THE INFORMATION, INCLUDING ESTIMATED QUANTITIES OF WORK, SHOWN ON THESE SHEETS IS BASED ON LIMITED INVESTIGATIONS BY THE STATE AND IS IN NO WAY WARRANTED TO INDICATE THE CONDITIONS OF ACTUAL QUANTITIES OF WORK WHICH WILL BE REQUIRED.

Plotted Date: 3/7/2014

DESIGNER/DRAFTER: S.Yarmolinsky
CHECKED BY: A.DiCesare, P.E.
SCALE AS NOTED

STATE OF CONNECTICUT
DEPARTMENT OF TRANSPORTATION

Filename: ...\SB_MSH_Br03948_0301_0092_S-17.dgn

SIGNATURE/BLOCK: ADA — A.DiCesare Associates, P.C. 690 Clinton Avenue Bridgeport, CT 06604 203-696-0444 www.adicesarepc.com
APPROVED BY: A.DiCesare
DATE: 11/27/2013

STATE OF CONNECTICUT — ARTHUR V. DICESARE — 24403 — LICENSED PROFESSIONAL ENGINEER

PROJECT TITLE: REHABILITATION OF METRO-NORTH RAILROAD BRIDGE NO. 03948R AND BRIDGE NO. 03955R

TOWN: GREENWICH

DRAWING TITLE: CONSTRUCTION STAGING - 1

PROJECT NO. 301-092
DRAWING NO. S-17
SHEET NO. 05.18.A1

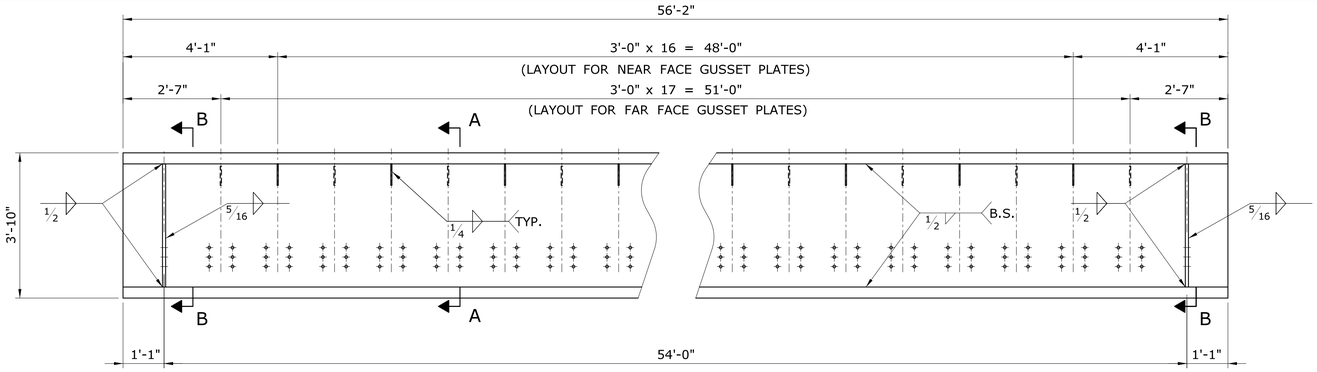

GIRDER G-1
SCALE: 1/2"=1'-0"

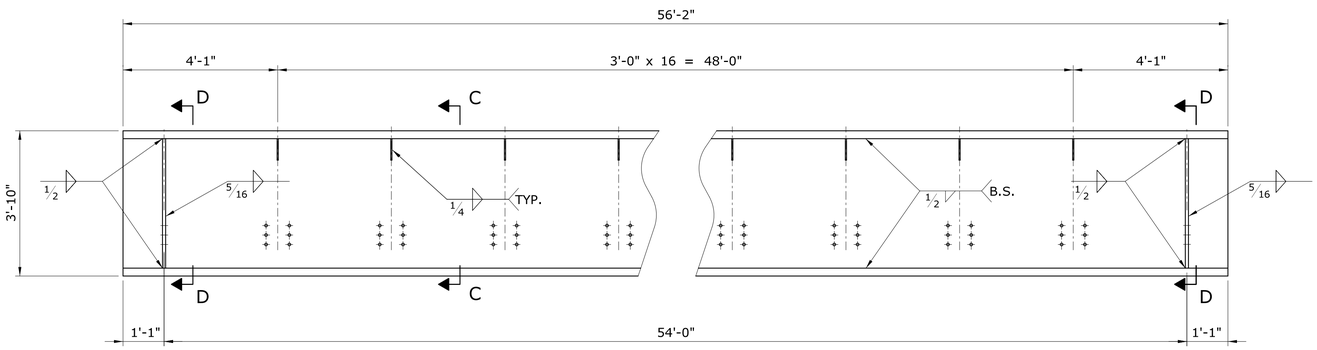

GIRDER G-2
SCALE: 1/2"=1'-0"

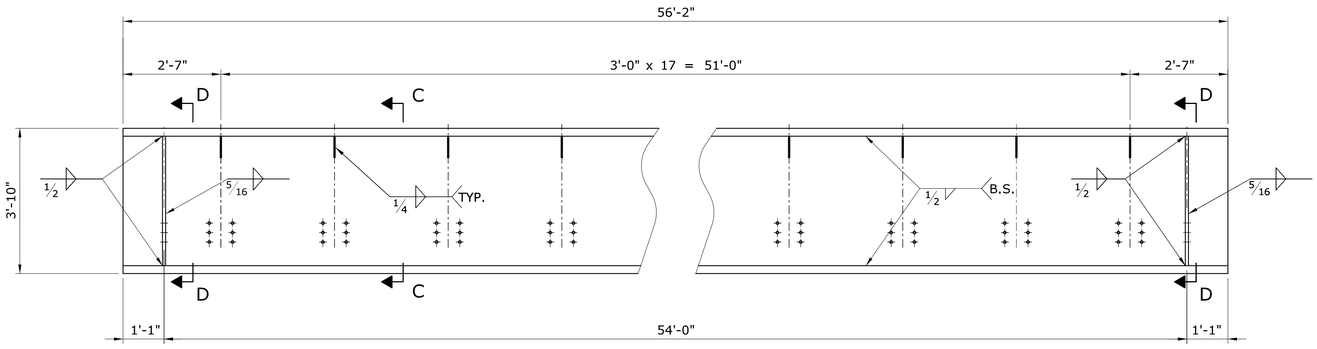

GIRDER G-3
SCALE: 1/2"=1'-0"

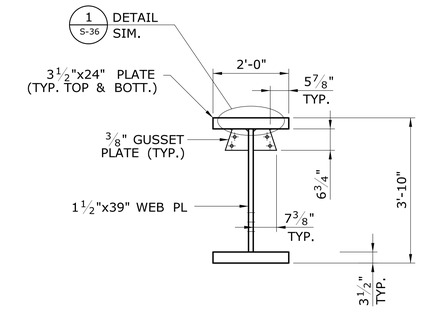

SECTION A-A
SCALE: 1/2"=1'-0"

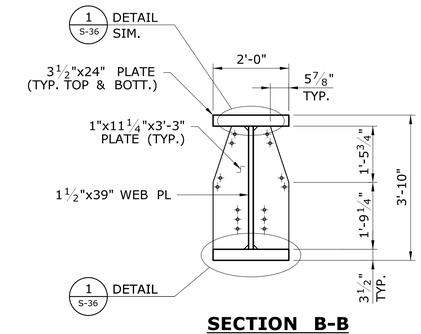

SECTION B-B
SCALE: 1/2"=1'-0"

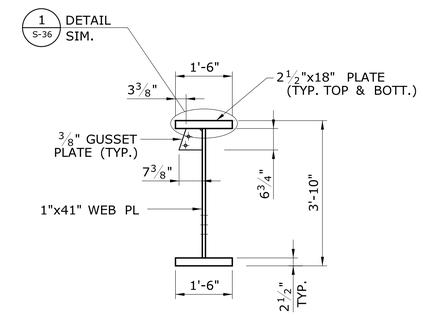

SECTION C-C
SCALE: 1/2"=1'-0"

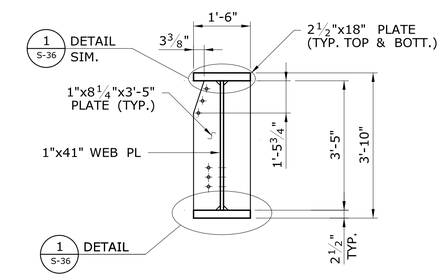

SECTION D-D
SCALE: 1/2"=1'-0"

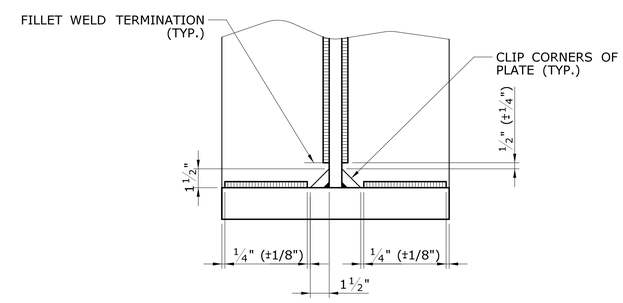

DETAIL 1 (S-36)
SCALE: 2"=1'-0"

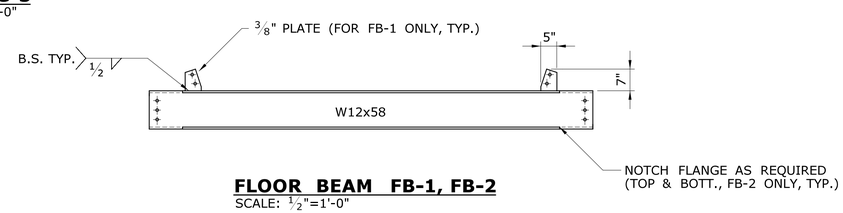

FLOOR BEAM FB-1, FB-2
SCALE: 1/2"=1'-0"

DEFLECTIONS AND CAMBERS TABLE

GIRDER MARK	DEFLECTIONS AT MIDSPAN (IN)		CAMBERS AT MIDSPAN (IN)		
	D1 *	D2 *	D1+D2	EXTRA**	TOTAL
G-1	0.06	0.38	0.44	0.54	0.98
G-2, G-3	0.06	0.32	0.38	0.54	0.92

* D1 - DEFLECTION DUE TO SELF-WEIGHT
D2 - DEFLECTION DUE TO SUPERIMPOSED DEAD LOAD

** EXTRA CAMBER EQUAL L/1200 PER CTDOT BRIDGE MANUAL

ADDENDUM NO. 1

REV.	DATE	REVISION DESCRIPTION	SHEET NO.
A1	02/25/14	ENTIRE SHEET REPLACED	05.37.A1

THE INFORMATION, INCLUDING ESTIMATED QUANTITIES OF WORK, SHOWN ON THESE SHEETS IS BASED ON LIMITED INVESTIGATIONS BY THE STATE AND IS IN NO WAY WARRANTED TO INDICATE THE CONDITIONS OF ACTUAL QUANTITIES OF WORK WHICH WILL BE REQUIRED.

Plotted Date: 3/7/2014

DESIGNER/DRAFTER: S.Yarmolinsky, P.E.
CHECKED BY: A.DiCesare, P.E.
SCALE AS NOTED

STATE OF CONNECTICUT
DEPARTMENT OF TRANSPORTATION

Filename: ...\SB_MSH_Br03948_0301_0092_S-36.dgn

SIGNATURE/BLOCK: ADA
A.DiCesare Associates, P.C.
690 Clinton Avenue
Bridgeport, CT 06604
203-696-0444
www.adicesarepc.com
APPROVED BY: A.DiCesare
DATE: 11/27/2013

STATE OF CONNECTICUT ARTHUR J. DICESARE III 18027 LICENSED PROFESSIONAL ENGINEER

PROJECT TITLE: REHABILITATION OF METRO-NORTH RAILROAD BRIDGE NO. 03948R AND BRIDGE NO. 03955R

TOWN: GREENWICH

DRAWING TITLE: STEEL GIRDERS AND FLOOR BEAMS

PROJECT NO. 301-092
DRAWING NO. S-36
SHEET NO. 05.37.A1