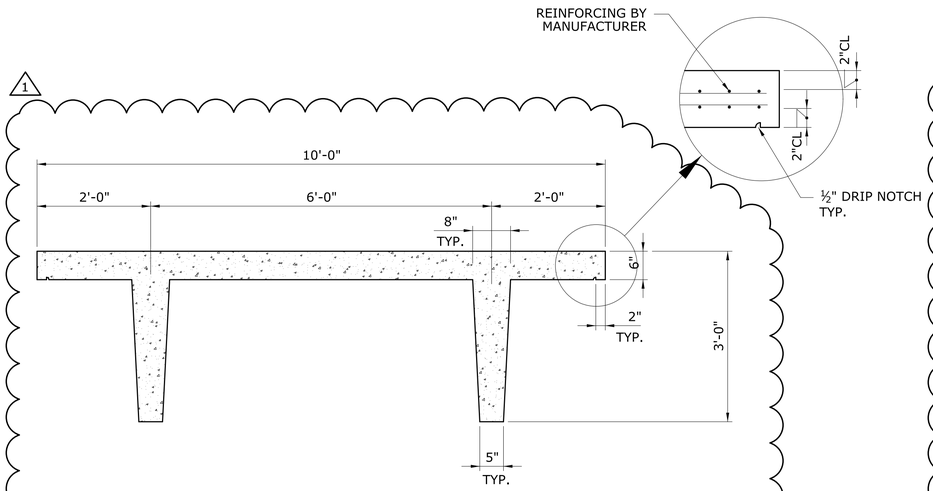

PRECAST CONCRETE PLATFORM TYPE 1 TYPICAL SECTION

SCALE: ¾"=1'-0"

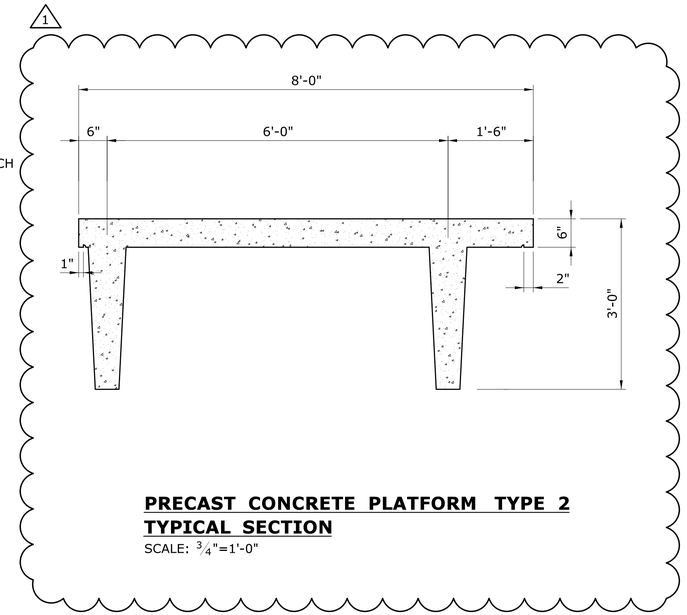

PRECAST CONCRETE PLATFORM TYPE 2 TYPICAL SECTION

SCALE: ¾"=1'-0"

PRECAST CONCRETE PLATFORM SCHEDULE

MARK	# REQ'D	TYPE	LENGTH	WIDTH	SPECIAL FEATURES
PP-1	13	TYPE 1	40'-0"	10'-0"	-
PP-2	2	TYPE 1	40'-0"	10'-0"	SEE DETAIL 1
PP-3	1	TYPE 1	40'-0"	10'-0"	SEE DETAIL 1
PP-4	1	TYPE 1	17'-9⅝"	10'-0"	SEE DETAIL 1
PP-5	1	TYPE 1	51'-2⅜"	10'-0"	-
PP-6	2	TYPE 2	54'-0"	8'-0"	SEE DWG PLE-10
PP-7	1	TYPE 2	42'-6"	8'-0"	-
PP-8	1	TYPE 2	39'-0"	8'-0"	-

NOTE: 1. CONCRETE, REINFORCING, INSERTS AND LIFTING LUGS BY MANUFACTURER
2. PLATFORM PP-6 SHALL RECIEVE RECESSED LETTERING TO NORTH AND SOUTH ELEVATIONS. SEE PLE-10

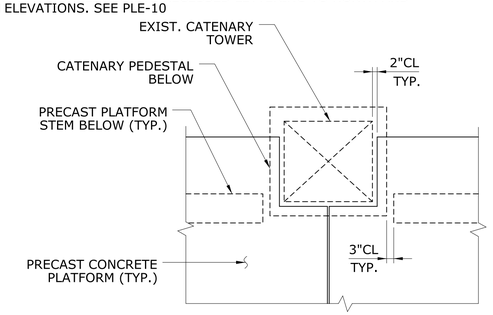

DETAIL 1

SCALE: ⅜"=1'-0" PLE-03

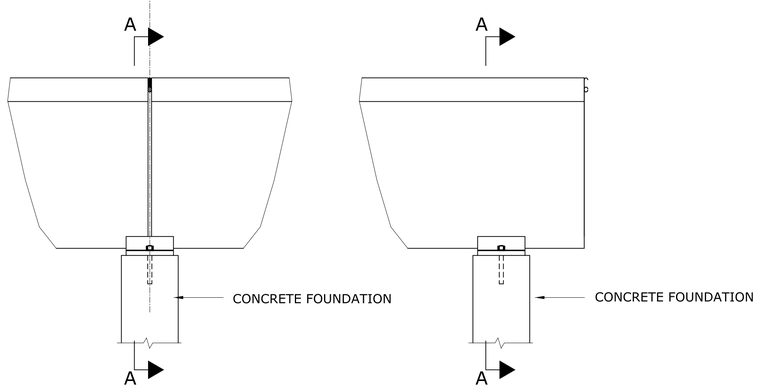

END SUPPORT **CANTILEVERED SUPPORT**

PRECAST PLATFORM SUPPORT DETAIL

SCALE: ¾"=1'-0"

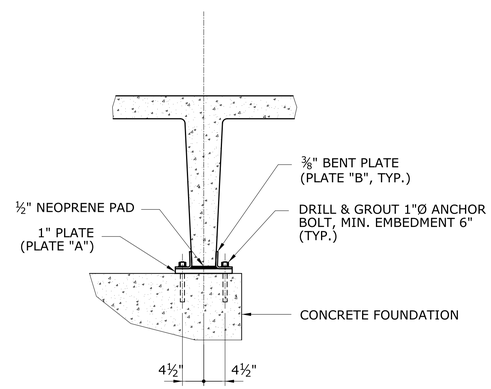

SECTION A-A

SCALE: ¾"=1'-0"

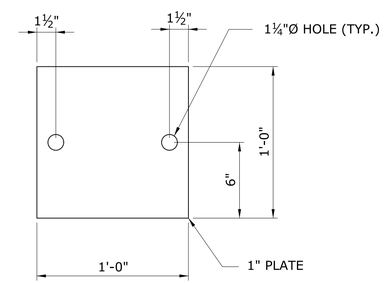

PLATE A

SCALE: 2"=1'-0"

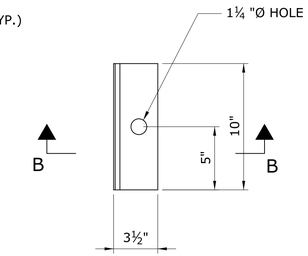

PLATE B

SCALE: 2"=1'-0"

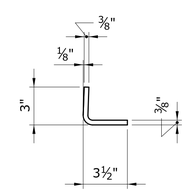

SECTION B-B

SCALE: 2"=1'-0"

Arthur DiCesare
2014.03.20
14:07:10-04'00'

ADDENDUM NO. 2

REV.	DATE	REVISION DESCRIPTION	SHEET NO.
1	03/07/14	DIMENSIONS CHANGED	07.07.A2

THE INFORMATION, INCLUDING ESTIMATED QUANTITIES OF WORK, SHOWN ON THESE SHEETS IS BASED ON LIMITED INVESTIGATIONS BY THE STATE AND IS IN NO WAY WARRANTED TO INDICATE THE CONDITIONS OF ACTUAL QUANTITIES OF WORK WHICH WILL BE REQUIRED.

Plotted Date: 3/20/2014

DESIGNER/DRAFTER: S.Yarmolinsky, P.E.
CHECKED BY: A.DiCesare, P.E.
SCALE AS NOTED

STATE OF CONNECTICUT
DEPARTMENT OF TRANSPORTATION

Filename: ...\SB_MSH_Br03948_0301_0092_PLE-6.dgn

SIGNATURE/BLOCK: ADA
A.DiCesare Associates, P.C.
690 Clinton Avenue
Bridgeport, CT 06604
203-696-0444
www.adicesarepc.com
APPROVED BY: A.DiCesare
DATE: 11/27/2013

PROJECT TITLE: REHABILITATION OF METRO-NORTH RAILROAD BRIDGE NO. 03948R AND BRIDGE NO. 03955R

TOWN: GREENWICH

DRAWING TITLE: PLATFORM EXTENSION DETAILS

PROJECT NO. 301-092
DRAWING NO. PLE-06
SHEET NO. 07.07.A2

Connecticut Department of Transportation
QA/QC Format Check

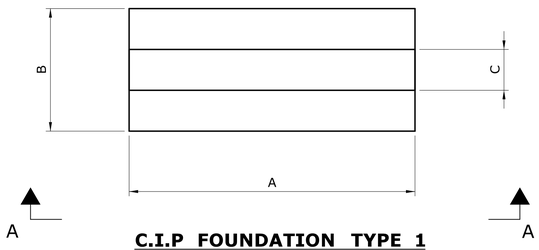

C.I.P FOUNDATION TYPE 1
SCALE: N.T.S.

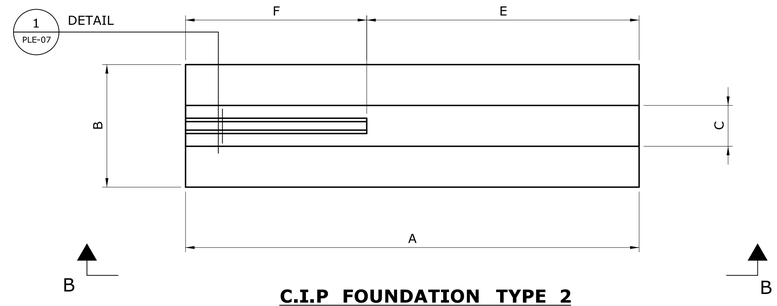

C.I.P FOUNDATION TYPE 2
SCALE: N.T.S.

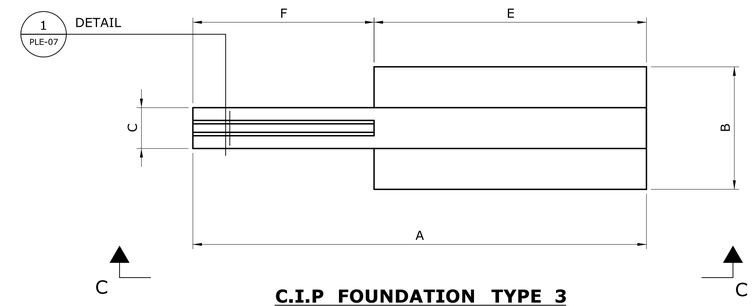

C.I.P FOUNDATION TYPE 3
SCALE: N.T.S.

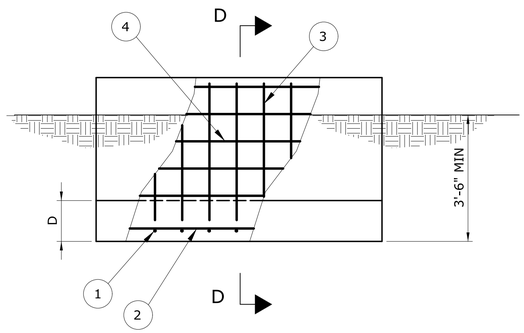

SECTION A-A
SCALE: N.T.S.

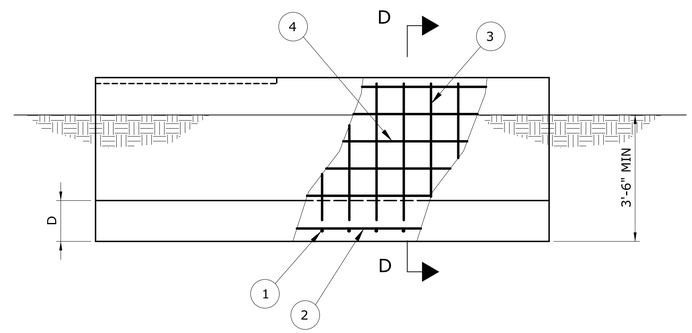

SECTION B-B
SCALE: N.T.S.

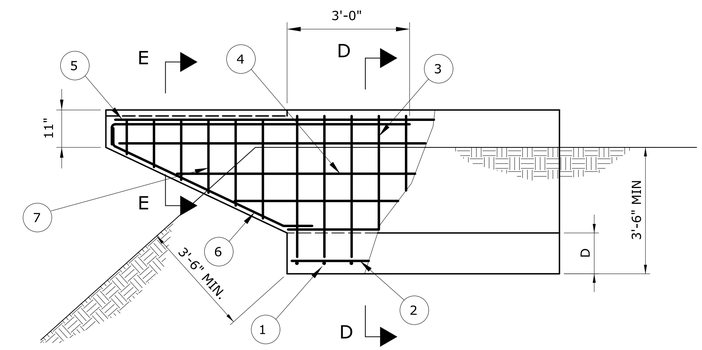

SECTION C-C
SCALE: N.T.S.

CAST-IN-PLACE FOUNDATION SCHEDULE

1

STAIR MARK	# REQ'D	TYPE	GEOMETRY						REINFORCING							
			A	B	C	D	E	F	1	2	3 *	4	5 *	6 *	7 **	SKETCH
F-1	8	TYPE 1	8'-0"	2'-6"	1'-0"	8"	-	-	#4@8"	#4@10"	#4@8"	#4@10"	-	-	-	
F-2	6	TYPE 1	8'-0"	3'-6"	1'-0"	8"	-	-	#5@8"	#4@10"	#4@8"	#4@10"	-	-	-	
F-3	3	TYPE 2	13'-0"	2'-6"	1'-0"	8"	8'-0"	5'-0"	#4@8"	#4@10"	#4@8"	#4@10"	-	-	-	
F-4	1	TYPE 3	13'-0"	4'-0"	1'-0"	12"	8'-0"	5'-0"	#5@8"	#4@10"	#4@8"	#4@10"	2#6	2#4	#4@10"	
F-5	4	TYPE 1	18'-0"	3'-6"	1'-0"	8"	-	-	#5@8"	#4@10"	#4@8"	#4@10"	-	-	-	

* BENT BAR, SEE SKETCH
** TIE, SEE SKETCH

DETAIL 1 / PLE-07
SCALE: N.T.S.

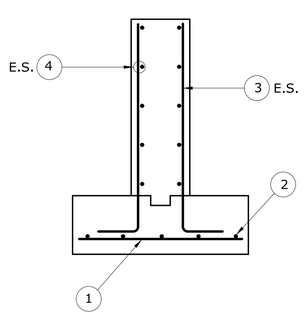

SECTION D-D
SCALE: N.T.S.

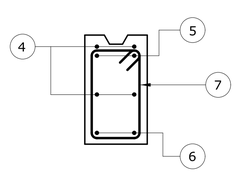

SECTION E-E
SCALE: N.T.S.

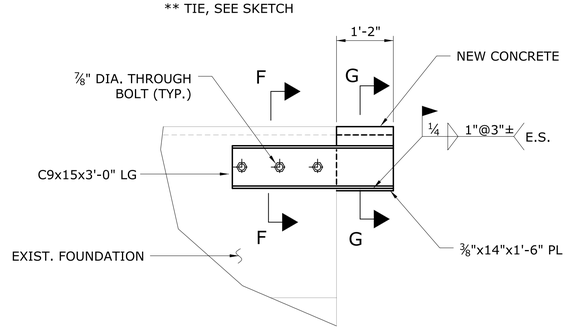

EXISTING FOUNDATION MODIFICATION DETAIL
SCALE: N.T.S.

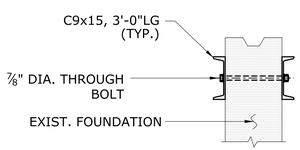

SECTION F-F
SCALE: ¾"=1'-0"

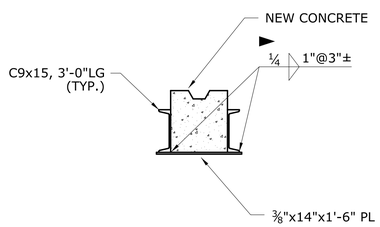

SECTION G-G
SCALE: ¾"=1'-0"

ADDENDUM NO. 2

REV.	DATE	REVISION DESCRIPTION	SHEET NO.
1	03/07/14	DIMENSIONS CHANGED	07.08.A2

THE INFORMATION, INCLUDING ESTIMATED QUANTITIES OF WORK, SHOWN ON THESE SHEETS IS BASED ON LIMITED INVESTIGATIONS BY THE STATE AND IS IN NO WAY WARRANTED TO INDICATE THE CONDITIONS OF ACTUAL QUANTITIES OF WORK WHICH WILL BE REQUIRED.

Plotted Date: 3/20/2014

DESIGNER/DRAFTER: S.Yarmolinsky, P.E.
CHECKED BY: A.DiCesare, P.E.
SCALE AS NOTED

STATE OF CONNECTICUT
DEPARTMENT OF TRANSPORTATION

Filename: ...\SB_MSH_Br03948_0301_0092_PLE-7.dgn

SIGNATURE/BLOCK: ADA
A.DiCesare Associates, P.C.
690 Clinton Avenue
Bridgeport, CT 06604
203-696-0444
www.adicesarepc.com
APPROVED BY: A.DiCesare
DATE: 11/27/2013

STATE OF CONNECTICUT ARTHUR J. DICESARE III LICENSED PROFESSIONAL ENGINEER

PROJECT TITLE:
REHABILITATION OF METRO-NORTH RAILROAD BRIDGE NO. 03948R AND BRIDGE NO. 03955R

TOWN: **GREENWICH**

DRAWING TITLE: **PLATFORM EXTENSION CONCRETE FOUNDATION**

PROJECT NO. **301-092**
DRAWING NO. **PLE-07**
SHEET NO. **07.08.A2**