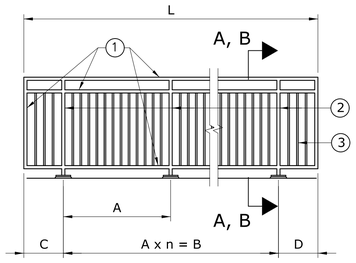

TYPE 1 RAILING (RL)
SCALE: N.T.S.

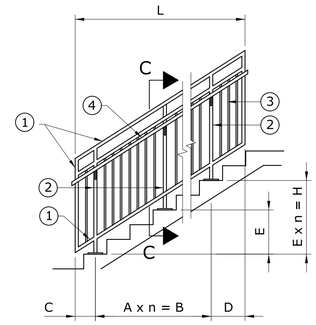

TYPE 2 RAILING (RS)
SCALE: N.T.S.

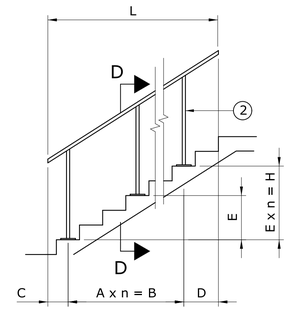

TYPE 3 RAILING (HR)
SCALE: N.T.S.

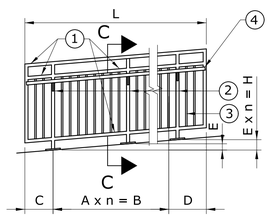

TYPE 4 RAILING (RR)
SCALE: N.T.S.

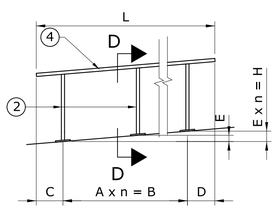

TYPE 5 RAILING (RR)
SCALE: N.T.S.

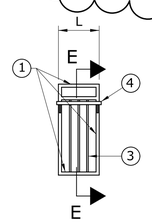

TYPE 6 RAILING (RF)
SCALE: N.T.S.

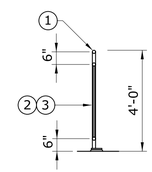

SECTION A-A
SCALE: N.T.S.

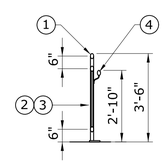

SECTION C-C
SCALE: N.T.S.

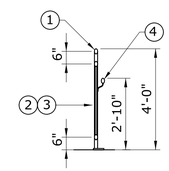

SECTION B-B
SCALE: N.T.S.

SECTION E-E
SCALE: N.T.S.

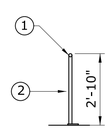

SECTION D-D
SCALE: N.T.S.

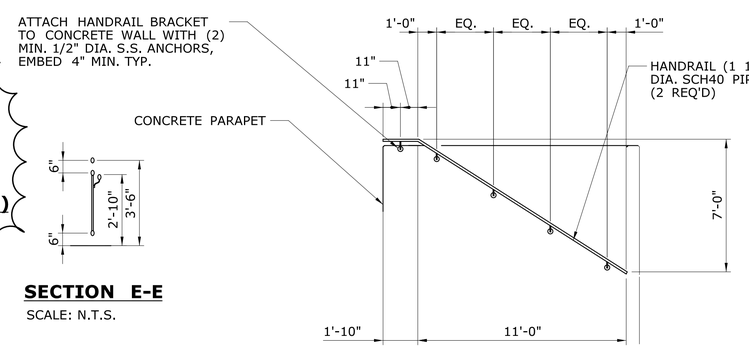

RETAINING WALL STAIRWAY HANDRAIL
SCALE: N.T.S.

RAILING AND HANDRAIL SCHEDULE

MARK	# REQ'D	TYPE	GEOMETRY								REMARKS
			n	A	B	C	D	L	E	H	
RL1	69	TYPE 1	3	5'-0"	15'-0"	2'-5"	2'-5"	19'-10"	-	-	SEE SECTION A-A
RL1*	4	TYPE 1	3	5'-4"	16'-0"	2'-5"	2'-5"	20'-10"	-	-	SEE SECTION A-A
RL2	10	TYPE 1	1	3'-0"	3'-0"	1'-3"	1'-3"	5'-6"	-	-	SEE SECTION A-A
RL3	12	TYPE 1	1	3'-0"	3'-0"	1'-0"	1'-0"	5'-0"	-	-	SEE SECTION B-B
RL4	7	TYPE 1	1	5'-0"	5'-0"	2'-0"	2'-0"	9'-0"	-	-	SEE SECTION B-B
RL5	6	TYPE 1	2	5'-0"	10'-0"	2'-6"	2'-6"	15'-0"	-	-	SEE SECTION A-A
RL6	3	TYPE 1	1	1'-10½"	1'-10½"	-	-	2'-0"	-	-	SEE SECTION A-A
RL7	2	TYPE 1	3	5'-0"	15'-0"	1'-11"	1'-11"	18'-10"	-	-	SEE SECTION A-A
RL8	1	TYPE 1	1	3'-6"	3'-6"	1'-3"	1'-3"	6'-0"	-	-	SEE SECTION A-A
RL9	1	TYPE 1	1	1'-6"	1'-6"	10"	10"	3'-2"	-	-	SEE SECTION A-A
RL10	3	TYPE 1	3	4'-0"	12'-0"	2'-4"	2'-4"	16'-8"	-	-	SEE SECTION A-A
RL11	3	TYPE 1	2	4'-0"	8'-0"	1'-3"	1'-3"	10'-6"	-	-	SEE SECTION A-A
RL12	2	TYPE 1	1	1'-10"	1'-10"	10"	10"	3'-6"	-	-	SEE SECTION B-B
RL13	3	TYPE 1	3	4'-5"	13'-3"	2'-2½"	2'-1½"	17'-6"	-	-	SEE SECTION A-A
RL14	5	TYPE 1	2	4'-0"	8'-0"	11"	11"	9'-10"	-	-	SEE SECTION A-A
RL15	4	TYPE 1	1	2-10½"	2'-10½"	-	-	3'-0"	-	-	SEE SECTION A-A
RL16	2	TYPE 1	1	2'-2½"	2'-2½"	-	-	2'-4"	-	-	SEE SECTION A-A
RL17	3	TYPE 1	1	4'-2"	4'-2"	1'-3"	1'-3"	6'-8"	-	-	SEE SECTION B-B
RS1	1	TYPE 2	1	2'-9"	2'-9"	1'-4"	1'-4"	5'-5"	1'-9⅜"	1'-9⅜"	SEE SECTION C-C
RS2	7	TYPE 2	1	3'-0"	3'-0"	1'-5"	1'-5"	5'-10"	1'-9"	1'-9"	SEE SECTION C-C
RS3	2	TYPE 2	1	4'-7"	4'-7"	1'-4"	1'-4"	7'-3"	3'-0¼"	3'-0¼"	SEE SECTION C-C
RS4	1	TYPE 2	2	2'-9"	5'-6"	1'-4"	1'-4"	8'-2"	1'-9"	3'-6"	SEE SECTION C-C
RS5	1	TYPE 2	2	3'-8"	7'-4"	10"	1'-4"	9'-6"	2'-2½"	4'-5"	SEE SECTION C-C
RS6	2	TYPE 2	2	2'-9"	5'-6"	1'-4"	1'-4"	8'-2"	1'-9¾"	3'-7½"	SEE SECTION C-C
RS7	2	TYPE 2	3	4'-7"	13'-9"	1'-4"	10"	15'-11"	2'-11"	8'-9"	SEE SECTION C-C
RS8	6	TYPE 2	2	4'-7"	9'-2"	1'-4"	1'-4"	11'-10"	2'-11"	5'-10"	SEE SECTION C-C
RS9	2	TYPE 2	2	4'-7"	9'-2"	1'-4"	1'-4"	11'-10"	3'-0⅛"	6'-0½"	SEE SECTION C-C
RS10	2	TYPE 2	3	3'-8"	11'-0"	1'-4"	1'-4"	13'-8"	2'-4"	7'-0"	SEE SECTION C-C
RS11	2	TYPE 2	3	3'-0"	6'-0"	1'-4"	2'-2"	8'-8"	1'-9	5'-3"	SEE SECTION C-C
HS1	1	TYPE 3	1	2'-9"	2'-9"	1'-4"	1'-4"	5'-5"	1'-9⅜"	1'-9⅜"	SEE SECTION D-D
HS2	5	TYPE 3	1	3'-0"	3'-0"	1'-5"	1'-5"	5'-10"	1'-9"	1'-9"	SEE SECTION D-D
HS3	2	TYPE 3	1	4'-7"	4'-7"	1'-4"	1'-4"	7'-3"	3'-0¼"	3'-0¼"	SEE SECTION D-D
HS4	1	TYPE 3	2	2'-9"	5'-6"	1'-4"	1'-4"	8'-2"	1'-9"	3'-6"	SEE SECTION D-D
HS5	1	TYPE 3	2	3'-8"	7'-4"	10"	1'-4"	9'-6"	2'-2½"	4'-5"	SEE SECTION D-D
HS6	3	TYPE 3	1	5'-0"	5'-0"	2'-0"	2'-0"	9'-0"	-	-	SEE SECTION D-D
RR1	4	TYPE 4	3	5'-0"	15'-0"	2'-5"	2'-5"	19'-10"	5"	1'-3"	SEE SECTION C-C
RR2	2	TYPE 4	1	4'-6"	4'-6"	2'-5"	10"	7'-9"	4½"	4½"	SEE SECTION C-C
HR1	4	TYPE 5	1	5'-0"	15'-0"	2'-5"	2'-5"	19'-10"	5"	1'-3"	SEE SECTION D-D
HR2	2	TYPE 5	1	4'-6"	4'-6"	2'-5"	10"	7'-9"	4½"	4½"	SEE SECTION D-D
HR3	1	TYPE 5	3	4'-0"	12'-0"	1'-2"	1'-2"	14'-4"	-	-	SEE SECTION D-D
RF1	1	TYPE 6	-	-	-	-	-	1'-0"	-	-	SEE SECTION E-E
RF2	1	TYPE 6	-	-	-	-	-	1'-8"	-	-	SEE SECTION E-E
RF3	1	TYPE 6	-	-	-	-	-	1'-3"	-	-	SEE SECTION E-E

LEGEND:

1. $1\frac{1}{2}$'Ø SCH 40 PIPE
2. $1\frac{1}{2}$'Ø SCH 40 POSTS @5'-0" MAX.
3. $\frac{3}{4}$"Ø SCH 40 PICKETS, 4" OPENING MAX.
4. $1\frac{1}{2}$'Ø SCH 40 HANDRAIL

STATE OF CONNECTICUT ARTHUR J. DICESARE 14015 LICENSED PROFESSIONAL ENGINEER

Arthur DiCesare
2014.03.20
14:05:04-04'00'

ADDENDUM NO. 2

REV.	DATE	REVISION DESCRIPTION	SHEET NO.
1	03/07/14	DIMENSIONS CHANGED	06.07.A2

THE INFORMATION, INCLUDING ESTIMATED QUANTITIES OF WORK, SHOWN ON THESE SHEETS IS BASED ON LIMITED INVESTIGATIONS BY THE STATE AND IS IN NO WAY WARRANTED TO INDICATE THE CONDITIONS OF ACTUAL QUANTITIES OF WORK WHICH WILL BE REQUIRED.

Plotted Date: 3/20/2014

DESIGNER/DRAFTER: S.Yarmolinsky, P.E.
CHECKED BY: A.DiCesare, P.E.
SCALE AS NOTED

STATE OF CONNECTICUT
DEPARTMENT OF TRANSPORTATION

Filename: ...\SB_MSH_Br03948_0301_0092_SWS-6.dgn

SIGNATURE/BLOCK: ADA
A.DiCesare Associates, P.C.
690 Clinton Avenue
Bridgeport, CT 06604
203-696-0444
www.adicesarepc.com
APPROVED BY: A.DiCesare
DATE: 11/27/2013

PROJECT TITLE:
REHABILITATION OF METRO-NORTH RAILROAD BRIDGE NO. 03948R AND BRIDGE NO. 03955R

TOWN: **GREENWICH**

DRAWING TITLE: **STAIRWAYS AND PLATFORMS RAILINGS AND HANDRAILS**

PROJECT NO. **301-092**
DRAWING NO. **SWS-6**
SHEET NO. **06.07.A2**

Connecticut Department of Transportation
QA/QC Format Check