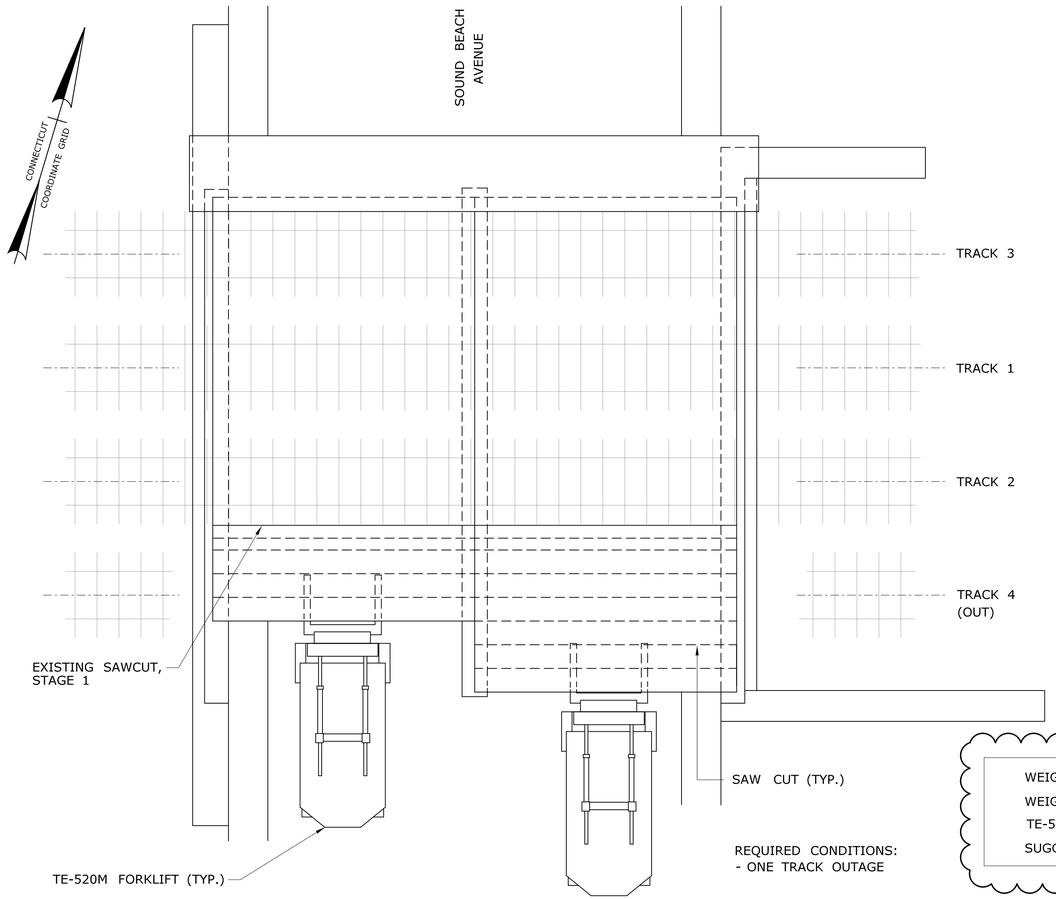

NOTE: TRACK 4 DEMOLITION SHOWN, TRACK 3 DEMOLITION SIMILAR

SUGGESTED DEMOLITION FOR TRACK 4 AND 3 - PLAN

SCALE: N.T.S.

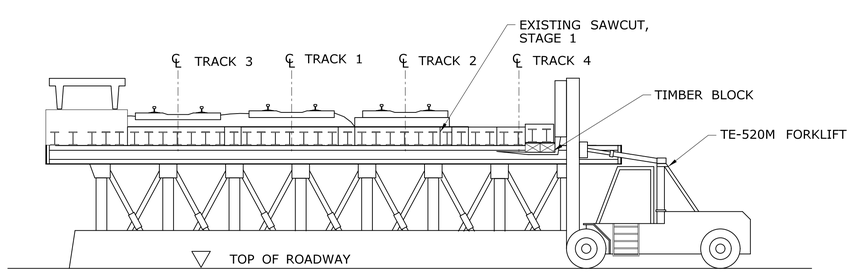

NOTE: TRACK 4 DEMOLITION SHOWN, TRACK 3 DEMOLITION SIMILAR

SUGGESTED DEMOLITION FOR TRACK 4 AND 3 - SECTION

SCALE: N.T.S.

WEIGHT OF 1 CONCRETE ENCASED STEEL BEAM	- 16.5k
WEIGHT FOR DESIGN (CONSIDERING S.F.=1.5)	- 25.0k
TE-520M FORKLIFT CAPACITY	- 52.0k
SUGGESTED PICK - 2 CONCRETE ENCASED STEEL BEAMS	

NOTE:

SUGGESTED DEMOLITION FOR TRACKS 2 AND 1

DEMOLITION FOR TRACKS 2 AND 1 SHALL BE PERFORMED IN TWO STAGES. DURING STAGE ONE FOUR SOUTHERNMOST BEAMS ARE REMOVED AND TEMPORARILY STORED ON TOP OF REMAINING BEAMS (AS SHOWN ON SECTION). SAW CUT BRIDGE DECK AFTER TRACK AND BALLAST REMOVAL. REMOVE PORTION OF EXISTING PIER.

DURING STAGE TWO, THE FORKLIFTS MAY OPERATE INSIDE THE GAP BETWEEN NEW SUPERSTRUCTURE AND EXISTING BEAMS. LOWER ALL EXISTING BEAMS TO ROADWAY LEVEL.

IT IS ASSUMED AND SUGGESTED THAT TIMBER CRIBBING AND ROLLERS WILL BE USED AS SHOWN ON DRAWINGS TO FACILITATE OPERATIONS.

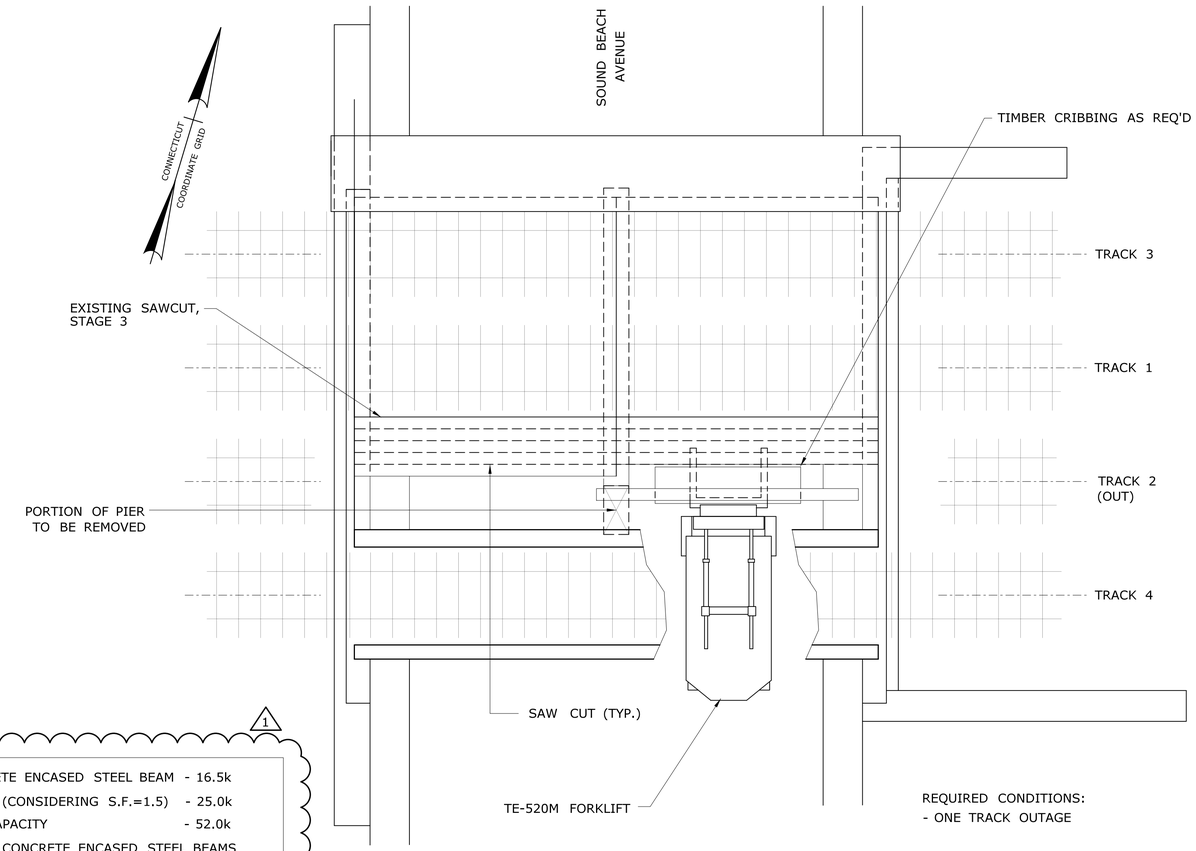

NOTE: TRACK 2 DEMOLITION SHOWN, TRACK 1 DEMOLITION SIMILAR

SUGGESTED DEMOLITION FOR TRACK 2 AND 1 - PLAN

SCALE: N.T.S.

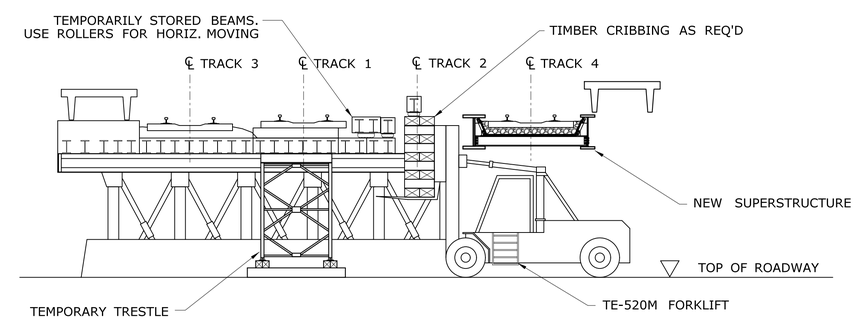

NOTE: TRACK 2 DEMOLITION SHOWN, TRACK 1 DEMOLITION SIMILAR

SUGGESTED DEMOLITION FOR TRACK 2 AND 1 - SECTION

SCALE: N.T.S.

STATE OF CONNECTICUT ARTHUR J. DICESARE LICENSED PROFESSIONAL ENGINEER

Arthur DiCesare
2014.03.20
14:02:13-04'00'

ADDENDUM NO. 2

REV.	DATE	REVISION DESCRIPTION	SHEET NO.
1	03/07/14	MODIFIED WEIGHTS	05.43.A2

THE INFORMATION, INCLUDING ESTIMATED QUANTITIES OF WORK, SHOWN ON THESE SHEETS IS BASED ON LIMITED INVESTIGATIONS BY THE STATE AND IS IN NO WAY WARRANTED TO INDICATE THE CONDITIONS OF ACTUAL QUANTITIES OF WORK WHICH WILL BE REQUIRED.

Plotted Date: 3/20/2014

DESIGNER/DRAFTER: S.Yarmolinsky, P.E.
CHECKED BY: A.DiCesare, P.E.
SCALE AS NOTED

STATE OF CONNECTICUT
DEPARTMENT OF TRANSPORTATION

Filename: ...\SB_MSH_Br03948_0301_0092_S-42.dgn

SIGNATURE/BLOCK: ADA
A.DiCesare Associates, P.C.
690 Clinton Avenue
Bridgeport, CT 06604
203-696-0444
www.adicesarepc.com
APPROVED BY: A.DiCesare
DATE: 11/27/2013

PROJECT TITLE: REHABILITATION OF METRO-NORTH RAILROAD BRIDGE NO. 03948R AND BRIDGE NO. 03955R

TOWN: GREENWICH

DRAWING TITLE: SUGGESTED BRIDGE DEMOLITION PLAN

PROJECT NO. 301-092
DRAWING NO. S-42
SHEET NO. 05.43.A2

Connecticut Department of Transportation
QA/QC Format Check