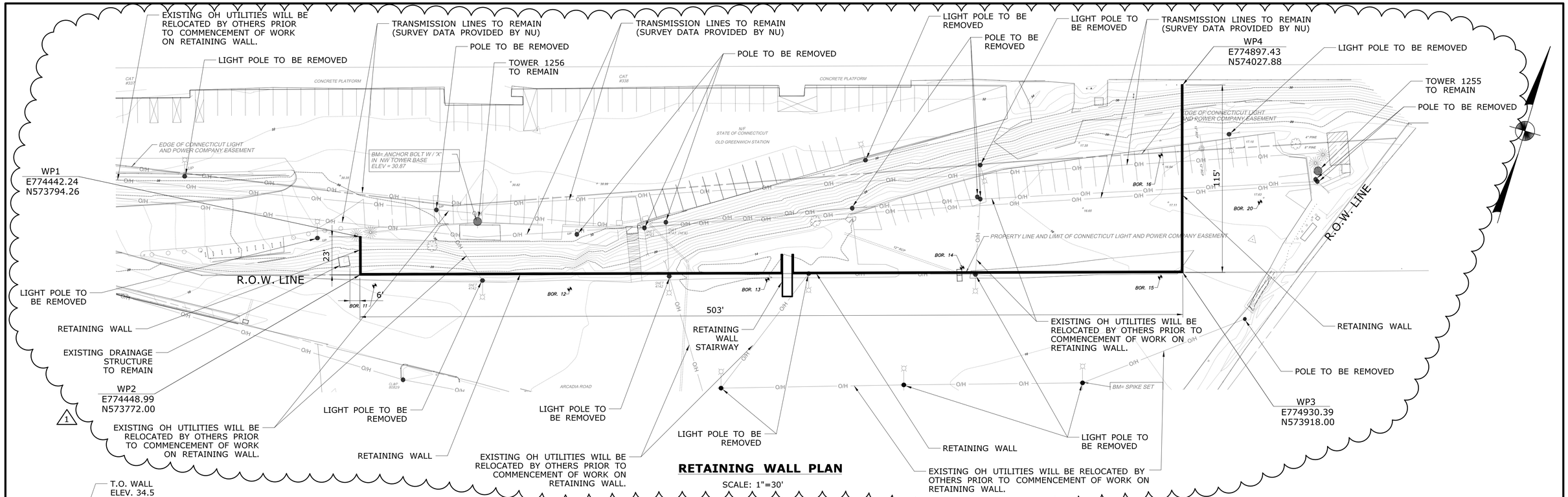

RETAINING WALL PLAN

SCALE: 1"=30'

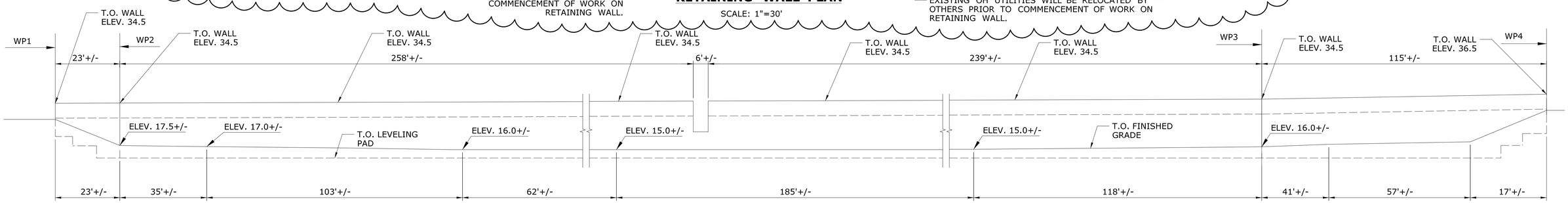

RETAINING WALL ELEVATION (UNFOLDED)

SCALE: 1"=20'

NOTES:

1. THE CONTRACTOR SHALL SELECT, DESIGN, (FOR PROPRIETARY WALLS ONLY) AND CONSTRUCT ONE OF THE FOLLOWING WALL OPTIONS IN ACCORDANCE WITH THE SPECIAL PROVISION "RETAINING WALL (SITE NO. 1)":
   -PREFABRICATED MODULAR WALL
   -MECHANICALLY STABILIZED EARTH (MSE) WALL
2. THE ALLOWABLE NET BEARING CAPACITY (SERVICE LOAD) OF FOUNDATION SOIL BELOW PROPOSED RETAINING WALL SHALL BE OF THE ORDER OF 2,000 PSF.
3. PROPRIETARY WALL SYSTEMS SHALL BE DESIGNED FOR SEISMIC FORCES IN ACCORDANCE WITH AASHTO SPECIFICATIONS. THE EARTHQUAKE GROUND ACCELERATION FOR DESIGN PURPOSES SHALL BE ON THE ORDER OF 0.15+/- 0.01 AND SITE (SOIL PROFILE TYPE I) COEFFICIENT S_1 = 1.0.
4. TEMPORARY SHEET PILING BELOW PAY LIMITS AND ANY TIEBACKS AND BRACING ASSOCIATED WITH THE SHEET PILING SHALL BE INCLUDED IN THE LUMP SUM COST OF THE WALL.
5. DETAILS SHOWN ON THIS SHEET ARE NOT SPECIFIC. THE CONTRACTOR'S DESIGNER SHALL MODIFY EACH SECTION FOR EACH SPECIFIC SITE.
6. LIGHT STANDARD ANCHORAGES, JUNCTION BOXES, AND RIGID METAL CONDUIT SHALL BE INCLUDED IN THE LUMP SUM PAY ITEM "RETAINING WALL (SITE NO. 1)".
7. REINFORCING TO HAVE 2" COVER EXCEPT WHERE SHOWN OTHERWISE.
8. ALL DIMENSIONS ARE SPECIFIED WITH THE APPLICABLE UNITS OF MEASUREMENT.
9. ANY ADDITIONAL LIGHTWEIGHT BACKFILL REQUIRED OUTSIDE THIS LIMIT SHALL ALSO BE INCLUDED IN THE LUMP SUM PRICE.
10. WHERE A CONCRETE LEVELING PAD IS PROVIDED UNDER THE FRONT OF THE WALL, EMBEDMENT DEPTH SHALL BE MEASURED TO THE TOP OF THE LEVELING PAD.
11. SURFACE LIVE LOADS: VEHICULAR LIVE LOADS, PARKING LOT
12. HORIZONTAL LIVE LOADS: VEHICULAR LIVE LOADS
13. UTILITIES: THE CONTRACTOR SHALL VERIFY THE SIZE AND LOCATION OF ALL INCLUDING OVERHEAD UTILITIES WITHIN THE PROJECT LIMITS PRIOR TO THE START OF CONSTRUCTION AND SHALL TAKE NECESSARY PRECAUTIONS WHEN WORKING NEAR UTILITIES SO AS NOT TO DISTURB THEM. CONTRACTOR SHALL BE FAMILIAR WITH THE NORTHEAST UTILITY (NU) OVERHEAD TRANSMISSION STANDARDS FOR OPERATION OF EQUIPMENT UNDER AND ADJACENT TO THE NU LINE ON RIGHTS OF WAY.
14. ELEVATIONS: ALL ELEVATIONS ARE GIVEN IN FEET AND ARE REFERENCED TO NGVD-29.
15. UTILITY RELOCATION WILL OCCUR PRIOR TO COMMENCEMENT OF WORK ON RETAINING WALL.

STATE OF CONNECTICUT ARTHUR J. DICESARE LICENSED PROFESSIONAL ENGINEER
Arthur DiCesare
2014.03.20
14:09:21-04'00'

ADDENDUM NO. 2

REV.	DATE	REVISION DESCRIPTION	SHEET NO.
1	03/07/14	REVISED NOTES	10.02.A2

THE INFORMATION, INCLUDING ESTIMATED QUANTITIES OF WORK, SHOWN ON THESE SHEETS IS BASED ON LIMITED INVESTIGATIONS BY THE STATE AND IS IN NO WAY WARRANTED TO INDICATE THE CONDITIONS OF ACTUAL QUANTITIES OF WORK WHICH WILL BE REQUIRED.

Plotted Date: 3/20/2014

DESIGNER/DRAFTER: S.Yarmolinsky, P.E.
CHECKED BY: A.DiCesare, P.E.
SCALE AS NOTED

STATE OF CONNECTICUT
DEPARTMENT OF TRANSPORTATION

Filename: ...\SB_MSH_Br03948_0301_0092_RWL-1.dgn

SIGNATURE/BLOCK: ADA — A.DiCesare Associates, P.C. 690 Clinton Avenue Bridgeport, CT 06604 203-696-0444 www.adicesarepc.com
APPROVED BY: A.DiCesare DATE: 11/27/2013

STATE OF CONNECTICUT ARTHUR J. DICESARE LICENSED PROFESSIONAL ENGINEER

PROJECT TITLE: REHABILITATION OF METRO-NORTH RAILROAD BRIDGE NO. 03948R AND BRIDGE NO. 03955R

TOWN: GREENWICH

DRAWING TITLE: RETAINING WALL PLAN AND ELEVATION

PROJECT NO. 301-092
DRAWING NO. RWL-1
SHEET NO. 10.02.A2

Connecticut Department of Transportation
QA/QC Format Check

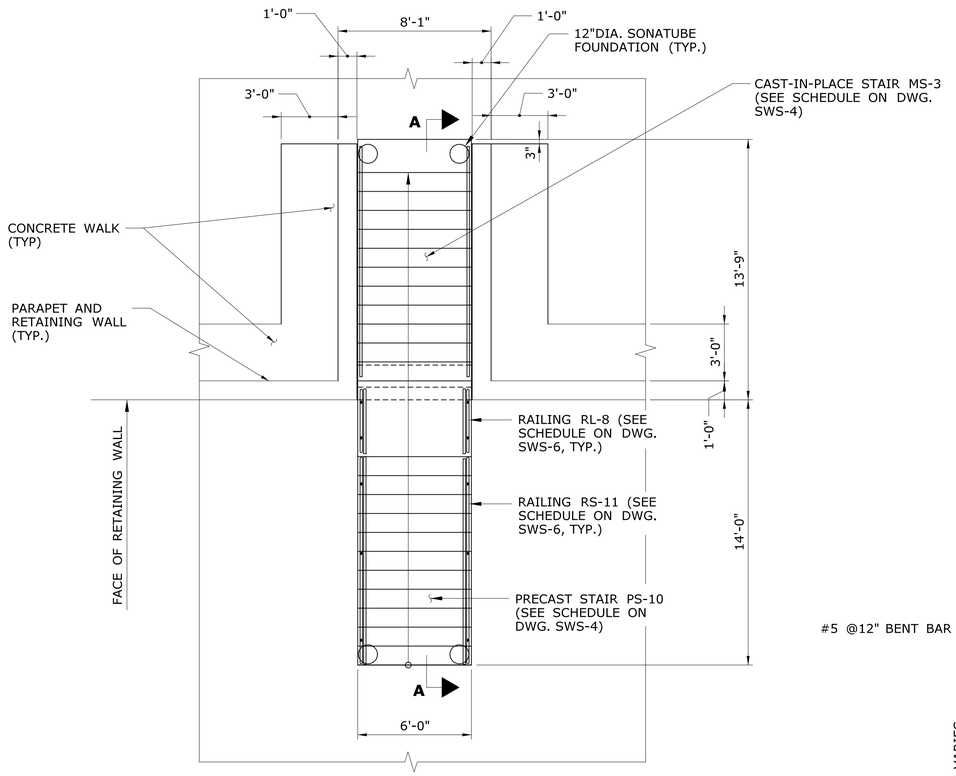

STAIRWAY PLAN

SCALE: 1/4"=1'-0"

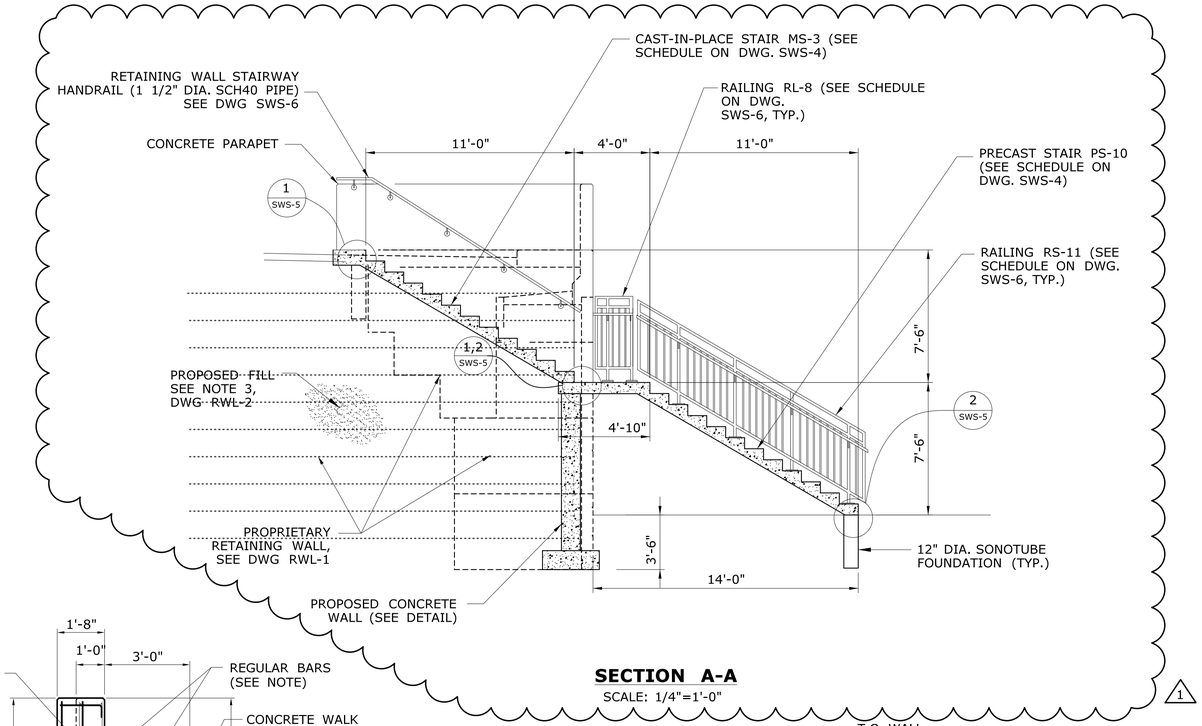

SECTION A-A

SCALE: 1/4"=1'-0"

1

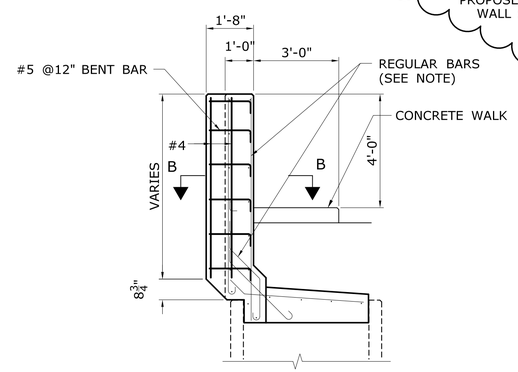

NOTE: ONLY PEDESTAL BARS SHOWN BOLD. FOR REGULAR PARAPET REINFORCING SEE CURB AND PARAPET DETAIL

PARAPET DETAIL AT LAMP POST PEDESTAL

SCALE: N.T.S.

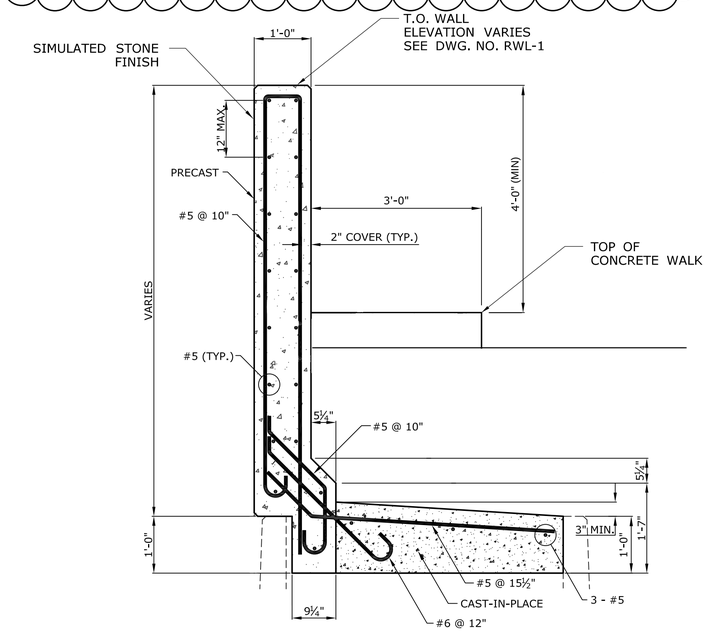

CURB AND PARAPET DETAIL

SCALE: N.T.S.

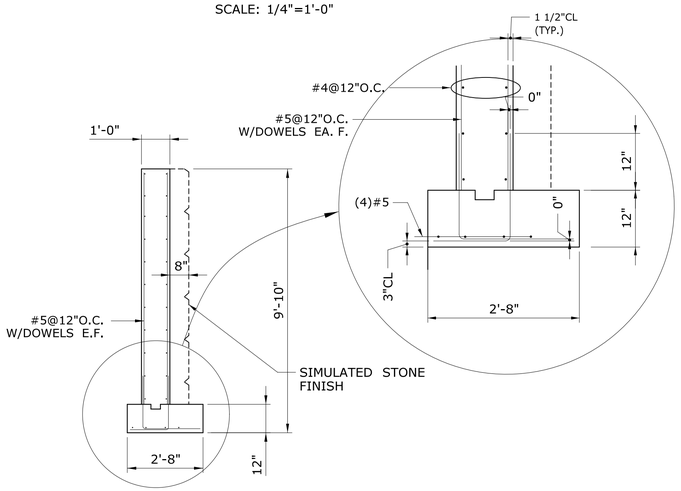

DETAIL OF CONCRETE WALL

SCALE: 3/8"=1'-0"

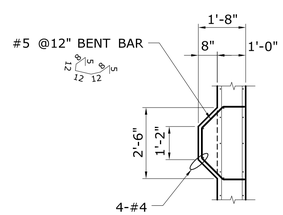

SECTION B-B

SCALE: N.T.S.

ADDENDUM NO. 2

REV.	DATE	REVISION DESCRIPTION	SHEET NO.
1	03/07/14	REVISED NOTES	10.04.A2

THE INFORMATION, INCLUDING ESTIMATED QUANTITIES OF WORK, SHOWN ON THESE SHEETS IS BASED ON LIMITED INVESTIGATIONS BY THE STATE AND IS IN NO WAY WARRANTED TO INDICATE THE CONDITIONS OF ACTUAL QUANTITIES OF WORK WHICH WILL BE REQUIRED.

Plotted Date: 3/20/2014

DESIGNER/DRAFTER: **S.Yarmolinsky, P.E.**
CHECKED BY: **A.DiCesare, P.E.**
SCALE AS NOTED

STATE OF CONNECTICUT
DEPARTMENT OF TRANSPORTATION

Filename: ...\SB_MSH_Br03948_0301_0092_RWL-3.dgn

SIGNATURE/BLOCK: ADA
A.DiCesare Associates, P.C.
690 Clinton Avenue
Bridgeport, CT 06604
203-696-0444
www.adicesarepc.com
APPROVED BY: A.DiCesare
DATE: 11/27/2013

STATE OF CONNECTICUT ARTHUR J. DICESARE III 14075 LICENSED PROFESSIONAL ENGINEER

PROJECT TITLE:
REHABILITATION OF METRO-NORTH RAILROAD BRIDGE NO. 03948R AND BRIDGE NO. 03955R

TOWN: **GREENWICH**

DRAWING TITLE: **RETAINING WALL STAIR SECTIONS AND DETAILS**

PROJECT NO. **301-092**
DRAWING NO. **RWL-3**
SHEET NO. **10.04.A2**