Banton Construction Company

General Contractors

339 Washington Avenue, North Haven, CT 06473
(203) 234-2353 Fax (203) 234-0010

Project: Bridgeport, Fairfield and Westport: New Haven Mainline-Catenary Replacement Bridge & Roadway Reconstruction

Project No. #15-296 and 301-0070

THIS DOCUMENT IS FOR INFORMATIONAL PURPOSES ONLY IN RESPONSE TO QUESTION #101

0090059-001
8 x 14 Bridge Plates

Shop Drawing Review

General contractors review is for general conformance with the design concept and the contract documents. Marking or comments shall not be considered as Relieving the Sub-Contractor from compliance with the Project Contract Documents or departures therefrom. Sub-Contractor remains responsible for details and Accuracy for selecting fabrication processes, for Techniques in assembly, and performing his work in a safe manner. Upon General Contractors approval drawings or submittals to be reviewed by Architect/ Engineer.

Furnish as Submitted	
Furnish as Corrected	
Amend and Re-submit	
Rejected – Re-submit	
Reviewed	X (9/07/2007)

BANTON CONSTRUCTION COMPANY
339 Washington Avenue
North Haven, CT 06473
203-234-2353
Fax 203-234-0010

By: **D. SITES**	Date In: 9/07/2007
Signed: DS	Date Out: 9/07/2007

SUBMITTAL REVIEW

☐ APPROVED ☒ REVISE & RESUBMIT *

☐ APPROVED AS NOTED

Corrections or comments made on the shop drawings and submittals during this review do not relieve the contractor from compliance with requirements of the drawings and specifications. This check is only for review of general conformance with the design concept of the project and general compliance with the information given in the contract documents. The contractor is responsible for: confirming and correlating all quantities and dimensions; selecting fabrication processes and techniques of construction; coordinating his work with that of all other trades; and performing his work in a safe and satisfactory manner.

By: [signature] Date: 09/17/07

WASHINGTON GROUP INTERNATIONAL

*(1) CONTRACTOR TO PROVIDE WIRE ROPE TIE DOWN DETAIL AND ENGINEER'S CALCULATIONS.

(2) METRO-NORTH TO PROVIDE RAILING SET BACK DISTANCE FOR TRAIN CLEARANCE

(3) CONTRACTOR TO WAIT FOR METRO-NORTH COMMENTS PRIOR TO RESUBMISSION.

THIS DRAWING PREPARED FOR:

BANTON CONSTRUCTION COMPANY
NORTH HAVEN, CONNECTICUT

PROJECT: BRIDGEPORT, FAIRFIELD & WESTPORT: NEW HAVEN MAINLINE CANTENARY REPLACEMENT BRIDGE & ROADWAY RECONSTRUCTION

CUSTOMER DOT PROJECT NUMBER: 15-296 and 301-0070

SITE REFERENCE: CANTENARY SECTION C-1B

THIS DRAWING PREPARED BY:

Sapa Fabricated Products
(REDD Team Manufacturing)
Keystone Heights, Florida
1-800-648-3696

PRODUCT REQUESTED:

8'-0" x 14'-0" BRIDGE PLATES
WITH 42" HIGH REMOVABLE 2-LINE RAILS

THIS DOCUMENT IS FOR INFORMATIONAL PURPOSES ONLY IN RESPONSE TO QUESTION #101

INDEX OF DRAWINGS

DESCRIPTION	DATE	PAGE
BRIDGE PLAN VIEW	8/29/07	1
BRIDGE ELEV VIEW & CROSS SECTION	8/29/07	2
BRIDGE CROSS SECTION VIEW	8/29/07	3
BRIDGE END VIEW	8/29/07	4
DETAILS	8/29/07	5
CONNECTION DETAIL	8/29/07	6

GARY DOUNSON & ASSOCIATES, INC.
STRUCTURAL ENGINEERS
2830 N.W. 41st STREET, SUITE D
GAINESVILLE, FLORIDA 32606-6690
352-375-8593 FAX: 352-375-6053
COA #5201

GARY G. DOUNSON P.E.
FL. ENG. #35054

STATE OF CONNECTICUT
DANIEL W. MCGINNIS
No. 23881
LICENSED
PROFESSIONAL ENGINEER
9/6/07

DATE: 8-29-07

GENERAL NOTES
(BRIDGE PLATES):

1. ALL STRUCTURAL MEMBERS TO BE 6061-T6 ALUMINUM ALLOY UNLESS OTHERWISE NOTED.
2. CONSTRUCTION IS TO BE WELDED UNLESS OTHERWISE NOTED.
3. ALUMINUM WILL BE STANDARD MILL FINISH UNLESS OTHERWISE NOTED.
4. WELDING WIRE TO BE ER5356 ALUMINUM ALLOY.
5. WELDING SHALL BE IN ACCORDANCE WITH ANSI/AWS D1.2-97 GMAW PROCESS BY EXPERIENCED OPERATORS.
6. DESIGN OF THE ALUMINUM STRUCTURES SHALL CONFORM TO THE 2005 EDITION OF THE ALUMINUM ASSOCIATION SPECIFICATIONS AND GUIDELINES FOR ALUMINUM STRUCTURES.
7. ALL SURFACES, MEMBERS AND THEIR WELDED JOINTS SHALL BE SMOOTH AND FREE FROM SHARP OR JAGGED EDGES.
8. ALL FASTENERS SHALL BE 18-8 STAINLESS STEEL UNLESS OTHERWISE NOTED.
9. BRIDGE SHALL BE DESIGNED FOR A 50 PSF LIVE LOAD WITH A MAXIMUM ALLOWABLE DEFLECTION OF L/180 WHERE "L" IS EQUAL TO THE FREE SPAN LENGTH IN DECIMAL INCHES.
10. WALKING SURFACES SHALL BE DESIGNED TO WITHSTAND A CONCENTRATED LOAD OF 300 LBS OVER A 12" BY 12" AREA.
11. HANDRAIL ASSEMBLIES AND GUARDRAILS SHALL BE DESIGNED TO RESIST A LOAD OF 50 PLF APPLIED IN ANY DIRECTION AT THE TOP OF THE RAIL.
12. HANDRAIL ASSEMBLIES AND GUARDRAILS SHALL BE ABLE TO RESIST A SINGLE CONCENTRATED LOAD OF 200 LBS, APPLIED IN ANY DIRECTION AT ANY POINT ALONG THE TOP OF THE RAIL. THIS LOAD NEED NOT BE ASSUMED TO ACT CONCURRENTLY WITH THE LOADS SPECIFIED IN THE PRECEDING PARAGRAPH.
13. INTERMEDIATE RAILS (ALL THOSE EXCEPT HANDRAILS), BALUSTERS AND PANEL FILLERS SHALL BE DESIGNED TO WITHSTAND A HORIZONTALLY APPLIED NORMAL LOAD OF 50 LBS ON AN AREA EQUAL TO 1 SQUARE FOOT, INCLUDING OPENINGS AND SPACE BETWEEN RAILS.
14. HANDRAILS SHALL BE HELD IN PLACE BY ONE (1) 3/8" x 3" LOCK PIN PER HANDRAIL POST (10 TOTAL POSTS). TWO (2) ADDITIONAL LOCK PINS WILL BE SUPPLIED WITH EACH BRIDGE PLATE.

Existing law protects Sapa Fabricated Products right's of possession to this drawing. The design or the drawing must not, without written permission of Sapa Fabricated Products, be reproduced, copied or communicated to a third party or exploited in any unauthorized way.

Sapa Fabricated Products
6599 S.R. 21
Keystone Heights, Florida 32656
Phone: (800)648-3696
Fax: (352)473-0219

sapa:

BANTON CONSTRUCTION COMPANY
NORTH HAVEN, CONNECTICUT
ALUMINUM ACCESS BRIDGE PLATE
WITH 42" HIGH TWO LINE REMOVABLE GUARDRAIL

DATE: 8/29/2007
JOB NO.: 07-6553
FILENAME: 8' x 14' BRIDGE R
REV.: R - 0
DRAWN BY: PLM
APPROVED BY:
SHEET NUMBER: COVER

THIS DOCUMENT IS FOR INFORMATIONAL PURPOSES ONLY IN RESPONSE TO QUESTION #101

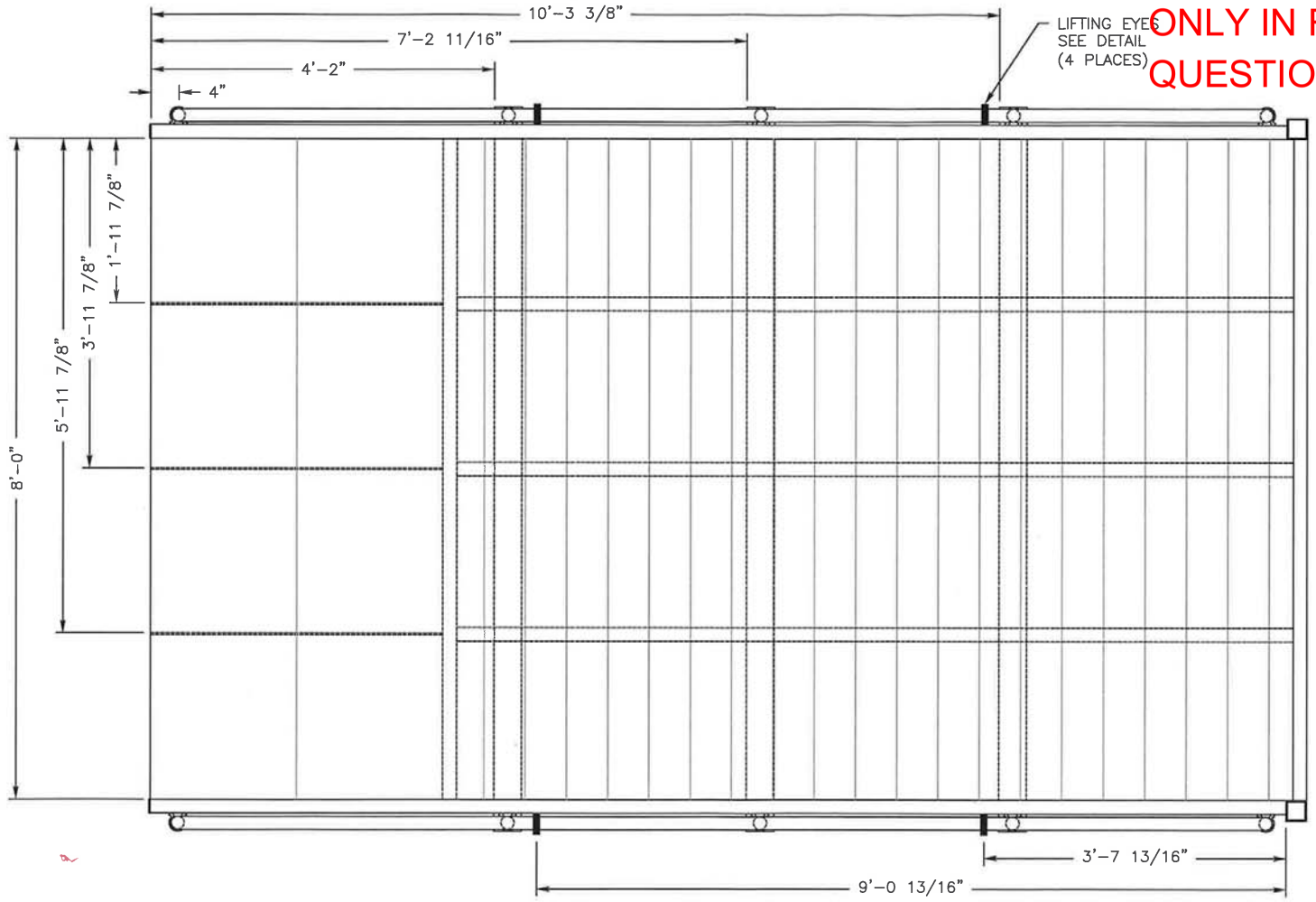

1/1 PLAN VIEW
8'-0" x 14'-0" BRIDGE PLATE
SCALE: 3/4"=1'-0

STATE OF CONNECTICUT
DANIEL W. McGINNIS
No. 23881
LICENSED
PROFESSIONAL ENGINEER
9/6/07

Existing law protects Sapa Fabricated Products right of possession to this drawing. The design or the drawing must not, without written permission of Sapa Fabricated Products, be published, copied, reproduced, manufactured or exploited in any unauthorized way.

sapa:
Sapa Fabricated Products
6599 S.R. 21
Keystone Heights, Florida 32656
Phone: 1(800)648-3696
Fax: 1(352)473-0219

BANTON CONSTRUCTION COMPANY
NORTH HAVEN, CONNECTICUT
ALUMINIM ACCESS BRIDGE PLATE
WITH 42" HIGH TWO LINE REMOVABLE GUARDRAIL

DATE	8/29/2007
JOB NO.	07-6553
FILENAME	8' x 14' BRIDGE PL
REV.	R - 0
DRAWN BY	PLM
APPROVED BY	
SHEET NUMBER	01

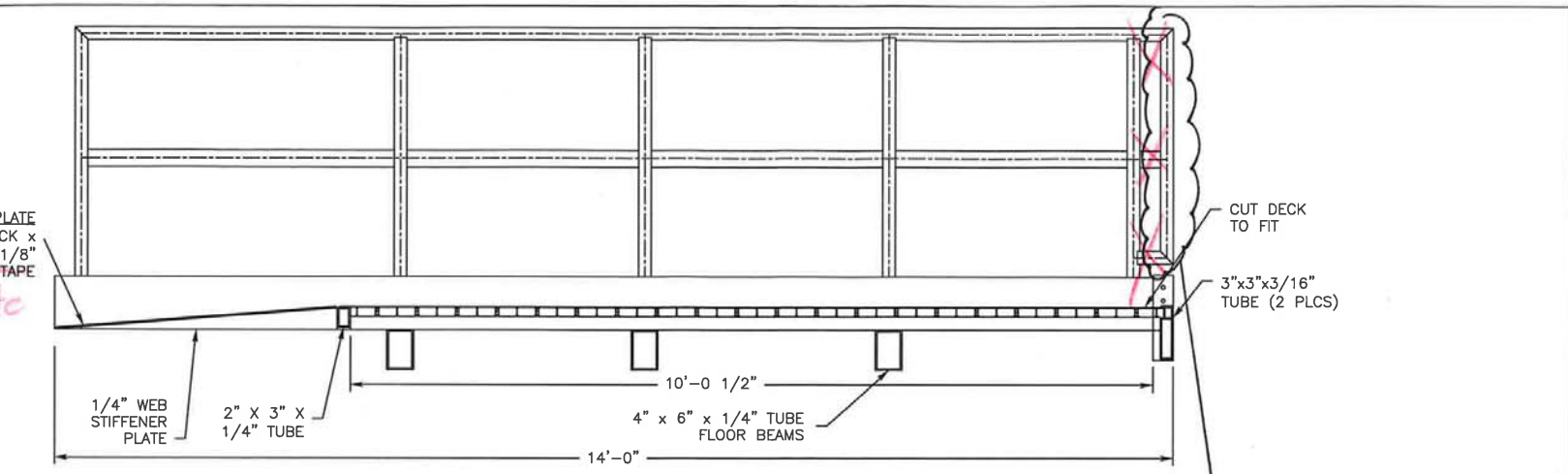

1/2 SECTION VIEW
8'-0" x 14'-0" BRIDGE PLATE
SCALE: NTS

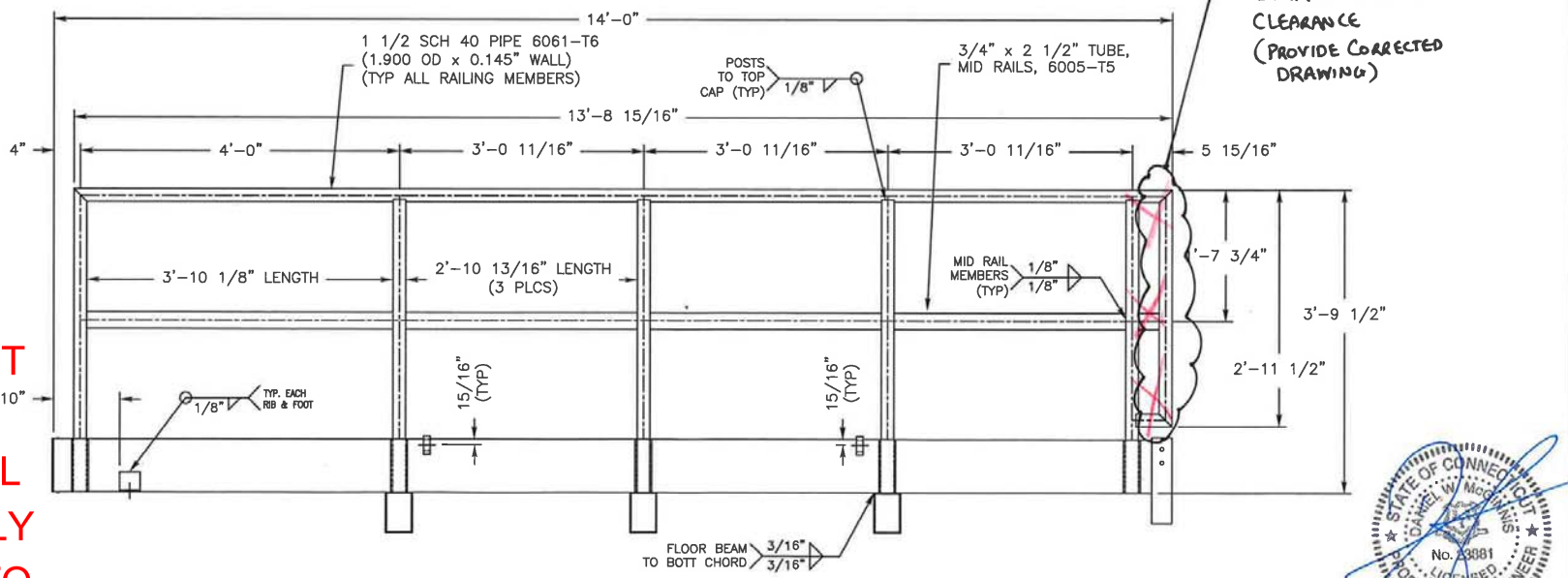

2/2 ELEVATION VIEW
8'-0" x 14'-0" BRIDGE PLATE
SCALE: NTS

METRO NORTH TO PROVIDE RAILING SETBACK DISTANCE FOR TRAN CLEARANCE (PROVIDE CORRECTED DRAWING)

THIS DOCUMENT IS FOR INFORMATIONAL PURPOSES ONLY IN RESPONSE TO QUESTION #101

STATE OF CONNECTICUT
DANIEL W. McGINNIS
No. 23881
LICENSED
PROFESSIONAL ENGINEER
9/6/07

Federal law protects Sapa Fabricated Products rights of protection to this drawing. The design or the drawing must not, without written permission of Sapa Fabricated Products, be published, copied, reproduced, manufactured or exploited in any unauthorized way.

Sapa Fabricated Products
6599 S.R. 21
Keystone Heights, Florida 32656
Phone: 1(800)648-3696
Fax: 1(352)473-0219

sapa:

BANTON CONSTRUCTION COMPANY
NORTH HAVEN, CONNECTICUT
ALUMINUM ACCESS BRIDGE PLATE
WITH 42" HIGH TWO LINE REMOVABLE GUARDRAIL

DATE 8/29/2007
JOB NO. 07-6553
FILENAME 8' x 14' BRIDGE PL
REV. R - 0
DRAWN BY PLM
APPROVED BY
SHEET NUMBER 02

THIS DOCUMENT IS FOR INFORMATIONAL PURPOSES ONLY IN RESPONSE TO QUESTION #101

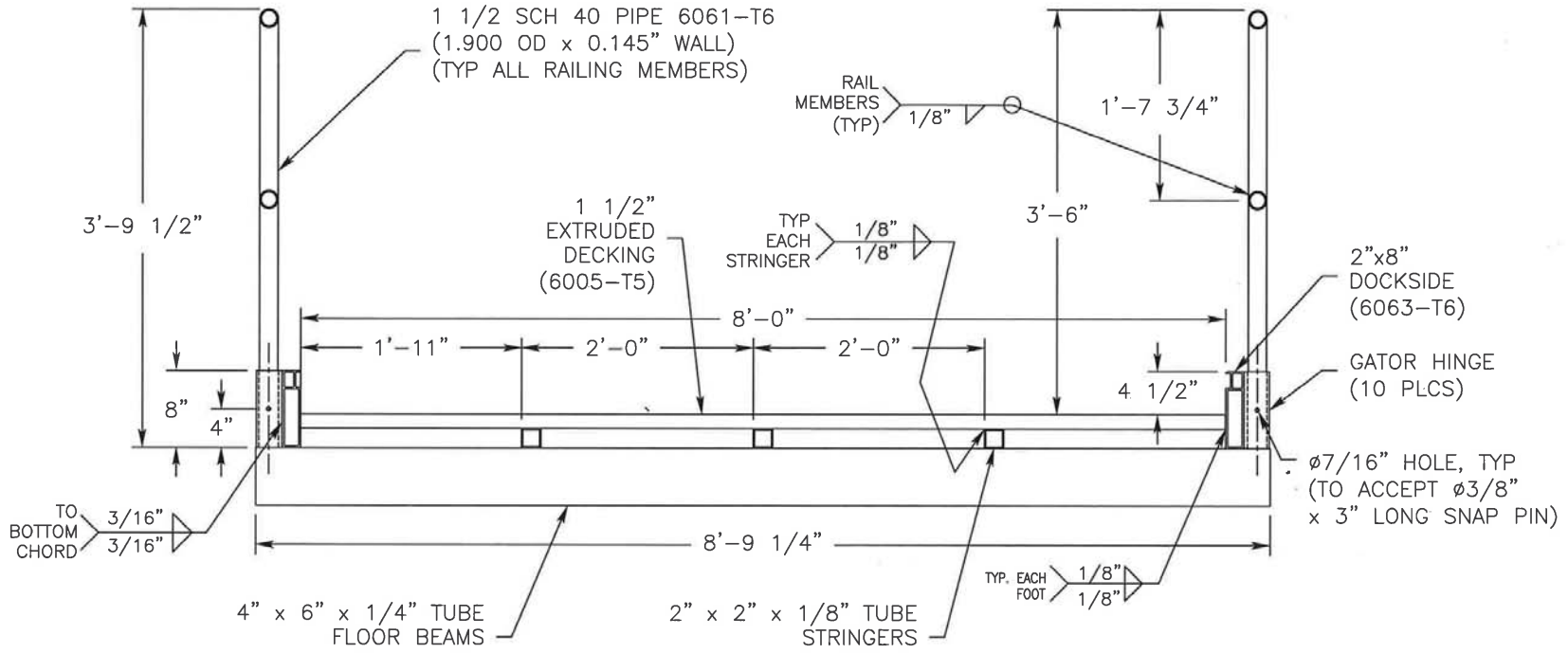

1/3 SECTION VIEW

8'-0" x 14'-0" BRIDGE PLATE

SCALE: 1"=1'-0

STATE OF CONNECTICUT DANIEL W. MCGINNIS No. 23881 LICENSED PROFESSIONAL ENGINEER

Existing few products Sapa Fabricated Products right of possession to this drawing. The design or the drawing must not, without written permission of Sapa Fabricated Products, be used, copied or reproduced, manufactured or exploited in any unauthorized way.

Sapa Fabricated Products
6599 S.R. 21
Keystone Heights, Florida 32656
Phone: 1(800)948-3696
Fax: 1(352)473-0219

sapa:

BANTON CONSTRUCTION COMPANY
NORTH HAVEN, CONNECTICUT
ALUMINM ACCESS BRIDGE PLATE
WITH 42" HIGH TWO LINE REMOVABLE GUARDRAIL

DATE 6/29/2007
JOB NO. 07-6553
FILENAME 8' x 14' BRIDGE PL
REV. R - 0
DRAWN BY PLM
APPROVED BY
SHEET NUMBER 03

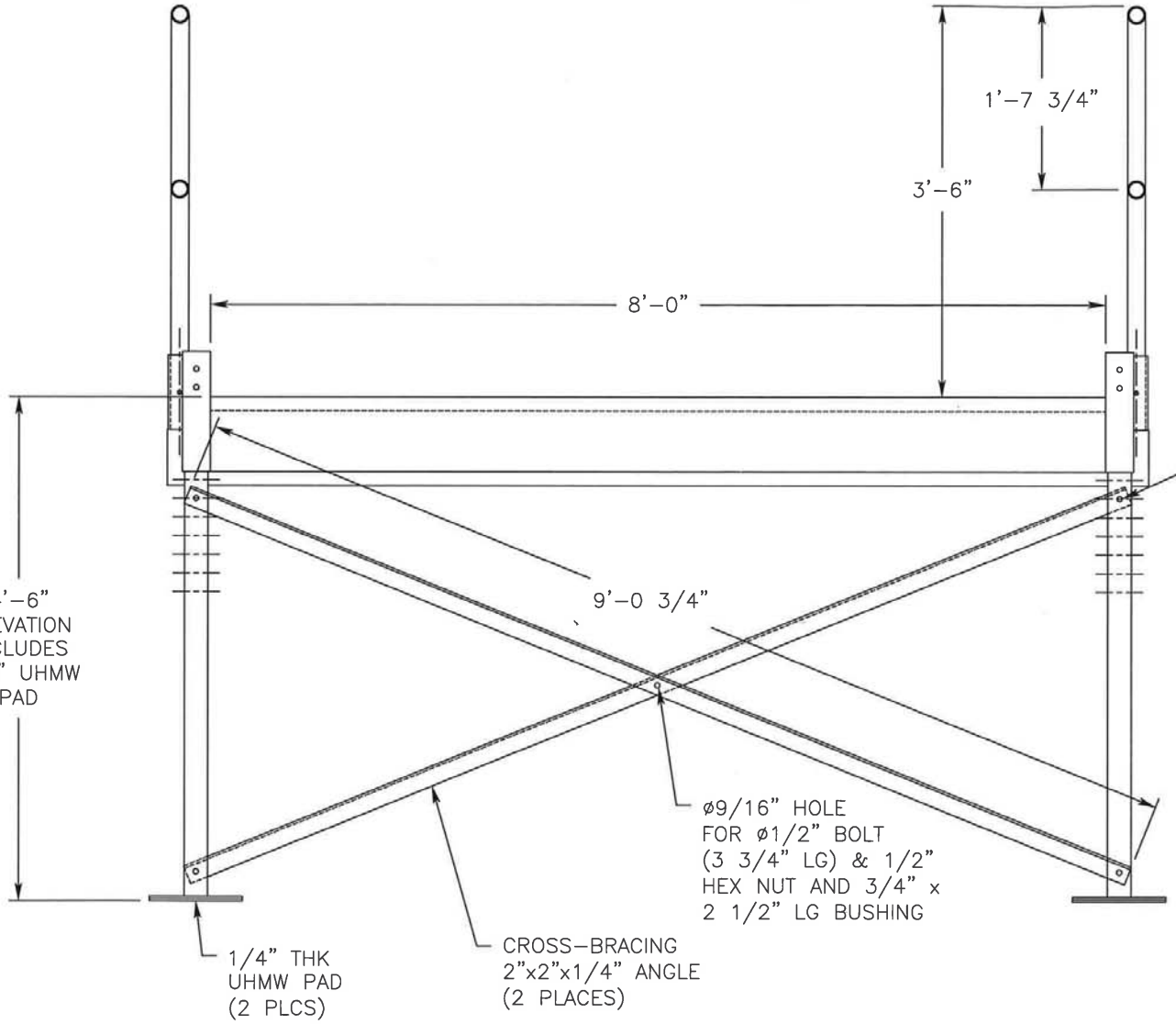

1/4 END VIEW
8'-0" x 14'-0" BRIDGE PLATE
SCALE: 1"=1'-0

THIS DOCUMENT IS FOR INFORMATIONAL PURPOSES ONLY IN RESPONSE TO QUESTION #101

STATE OF CONNECTICUT
DANIEL W. McGINNIS
No. 25881
LICENSED
PROFESSIONAL ENGINEER
9/6/07

Existing law protects Sapa Fabricated Products right of possession to this drawing. The design or the drawing must not, without written permission of Sapa Fabricated Products, be published, copied, reproduced, manufactured or exploited in any unauthorized way.

sapa:
Sapa Fabricated Products
6599 S.R. 21
Keystone Heights, Florida 32656
Phone: 1(800)648-3696
Fax: 1(352)473-0219

BANTON CONSTRUCTION COMPANY
NORTH HAVEN, CONNECTICUT
ALUMINIM ACCESS BRIDGE PLATE
WITH 42" HIGH TWO LINE REMOVABLE GUARDRAIL

DATE	8/29/2007
JOB NO.	07-6553
FILENAME	8' x 14' BRIDGE PL
REV.	R - 0
DRAWN BY	PLM
APPROVED BY	
SHEET NUMBER	04

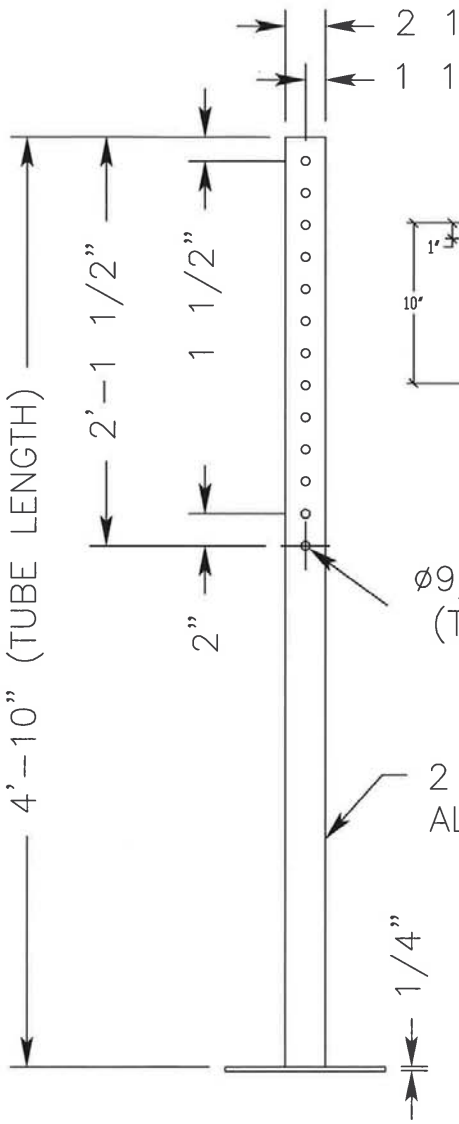

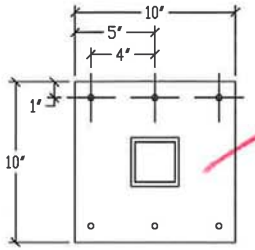

6" of Bearing Read. on 10" plate

THIS DOCUMENT IS FOR INFORMATIONAL PURPOSES ONLY IN RESPONSE TO QUESTION #101

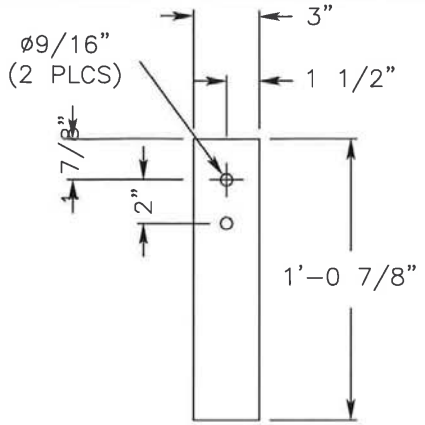

2/5 DETAIL VIEW
LEG RECIEVER TUBE DETAIL
SCALE: NTS QTY: 2 NEEDED

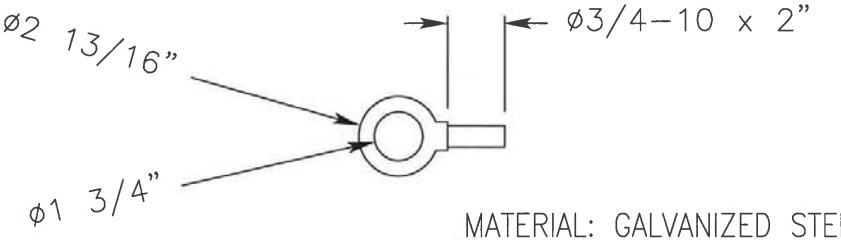

MATERIAL: GALVANIZED STEEL
5,000# SAFE WORKING LOAD
PER LIFTING EYE

3/5 DETAIL VIEW
LIFTING EYE BOLT
SCALE: NTS QTY: 4 NEEDED

1/5 DETAIL VIEW
LEG DETAIL
SCALE: NTS QTY: 2 NEEDED

STATE OF CONNECTICUT
KENNETH W. MCGINNIS
No. 23881
LICENSED
PROFESSIONAL ENGINEER
9/6/07

Existing law protects Sapa Fabricated Products right of possession to this drawing. The design or the drawing must not, without written permission of Sapa Fabricated Products, be utilized, copied, stored, reproduced, manufactured or exploited in any unauthorized way.

sapa:

Sapa Fabricated Products
6599 S.R. 21
Keystone Heights, Florida 32656
Phone: 1(800)548-3596
Fax: 1(352)473-0219

BANTON CONSTRUCTION COMPANY
NORTH HAVEN, CONNECTICUT
ALUMINIM ACCESS BRIDGE PLATE
WITH 42" HIGH TWO LINE REMOVABLE GUARDRAIL

DATE 8/29/2007
JOB NO. 07-6553
FILENAME 8' x 14' BRIDGE PL
REV. R - 0
DRAWN BY PLM
APPROVED BY
SHEET NUMBER 05

THIS DOCUMENT IS FOR INFORMATIONAL PURPOSES ONLY IN RESPONSE TO QUESTION #101

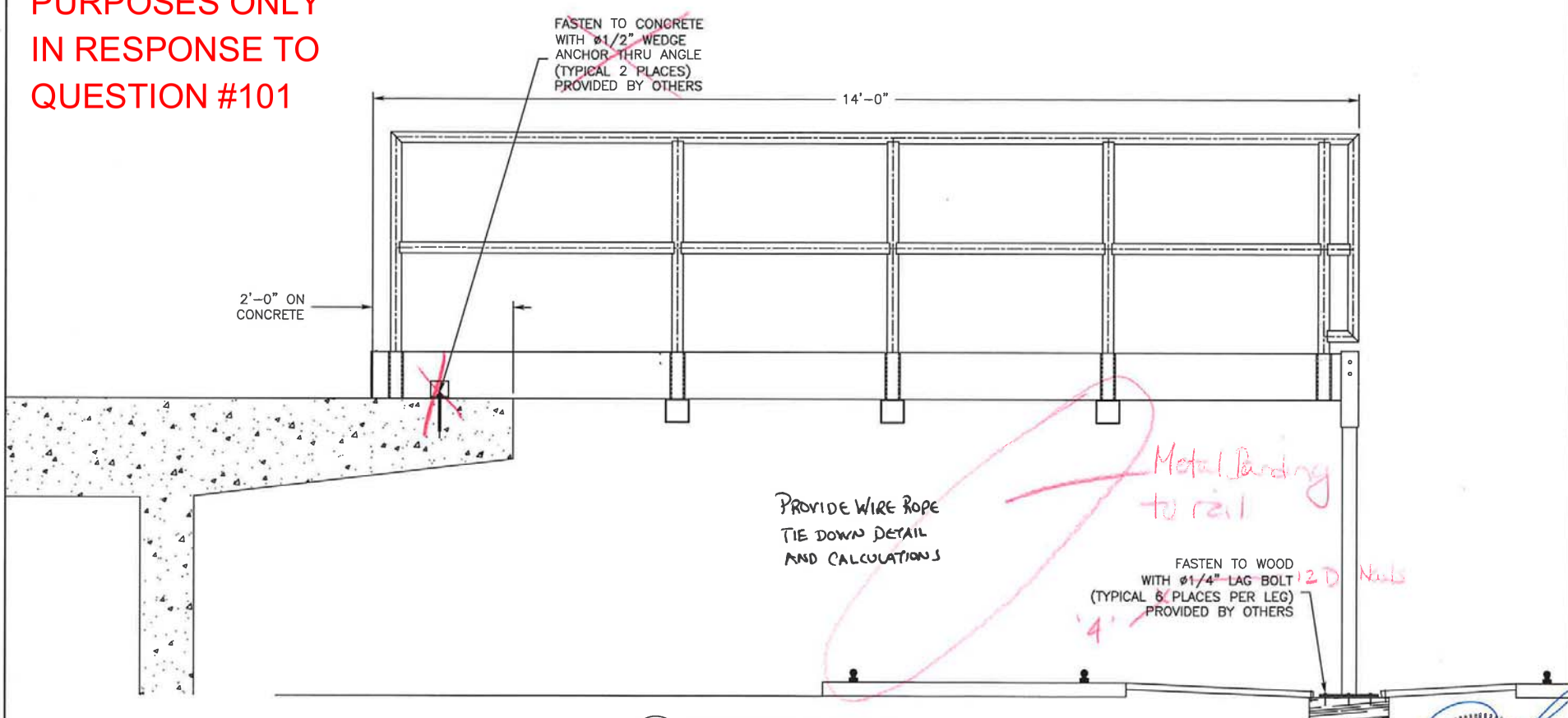

1/6 CONNECTION DETAIL
8'-0" x 14'-0" BRIDGE PLATE
SCALE: NTS

STATE OF CONNECTICUT
DANIEL W. McGINNIS
No. 23881
LICENSED
PROFESSIONAL ENGINEER
9/6/07

Existing law protects Sapa Fabricated Products right of possession to this drawing. The design or the drawing must not, without written permission of Sapa Fabricated Products, be published, copied, reproduced, manufactured or exploited in any unauthorized way.

sapa:
Sapa Fabricated Products
6599 S.R. 21
Keystone Heights, Florida 32656
Phone: 1(800)648-3696
Fax: 1(352)473-0219

BANTON CONSTRUCTION COMPANY
NORTH HAVEN, CONNECTICUT
ALUMINIM ACCESS BRIDGE PLATE
WITH 42" HIGH TWO LINE REMOVABLE GUARDRAIL

DATE 8/29/2007
JOB NO. 07-6553
FILENAME 8' x 14' BRIDGE PL
REV. R - 0
DRAWN BY PLM
APPROVED BY
SHEET NUMBER 06

Banton Construction Company, Inc.

General Contractors

339 Washington Avenue, North Haven, CT 06473
(203) 234-2353 Fax (203) 234-0010

Project: CT DOT Project : #0015-0079 & 0301-0070

Specification Section :2711- 0090059- Revision 2
14x14 Bridge Plate Shop Drawings & Calculations

Shop Drawing Review

General Contractors review is for general conformance with the design concept and the contract documents. Marking or comments shall not be considered as relieving the Sub-Contractor from compliance with the project contract documents or departures there from. Sub-Contractor remains responsible for details and accuracy for selecting fabrication processes, for techniques in assembly, and performing his work in a safe manner. Upon General Contractors approval, drawings or submittals to be reviewed by Architect/Engineer.

Furnish as Submitted	
Furnish as Corrected	
Amend and Re-submit	
Rejected – Re-submit	

BANTON CONSTRUCTION COMPANY
339 Washington Avenue
North Haven, CT 06473
203-234-2353
Fax 203-234-0010

By: Scott Brace	Date In: 9/17/07
Signed:	Date Out: 9/17/07

THIS DOCUMENT IS FOR INFORMATIONAL PURPOSES ONLY IN RESPONSE TO QUESTION #101

THIS DRAWING PREPARED FOR:

BANTON CONSTRUCTION COMPANY
NORTH HAVEN, CONNECTICUT

PROJECT: BRIDGEPORT, FAIRFIELD & WESTPORT: NEW HAVEN MAINLINE CANTENARY REPLACEMENT BRIDGE & ROADWAY RECONSTRUCTION

CUSTOMER DOT PROJECT NUMBER: 15-296 and 301-0070

SITE REFERENCE: CANTENARY SECTION C-1B

THIS DRAWING PREPARED BY:

Sapa Fabricated Products
(REDD Team Manufacturing)
Keystone Heights, Florida
1-800-648-3696

PRODUCT REQUESTED:

14'-0" x 14'-0" BRIDGE PLATE (2 SECTIONS @ 7' x 14')
WITH 42" HIGH REMOVABLE 2-LINE RAILS

INDEX OF DRAWINGS

DESCRIPTION	DATE	PAGE
BRIDGE PLAN VIEW (7' WIDE SECTION)	9/6/07	1
ASSEMBLED BRIDGE PLAN VIEW	9/6/07	2
BRIDGE CROSS SECTION VIEW	9/6/07	3
BRIDGE ELEVATION VIEW	9/6/07	4
SECTION VIEW (7' WIDE)	9/6/07	5
BRIDGE END VIEW (14' WIDE)	9/6/07	6
CONNECTION DETAIL	9/6/07	7

THIS DOCUMENT IS FOR INFORMATIONAL PURPOSES ONLY IN RESPONSE TO QUESTION #101

GARY DOUNSON & ASSOCIATES, INC.
STRUCTURAL ENGINEERS
2830 N.W. 41st STREET, SUITE D
GAINESVILLE, FLORIDA 32606-6690
352-375-6593 FAX: 352-375-6053
COA #5201

GARY G. DOUNSON P.E.
FL. ENG. #35054

DATE: 9-11-07

GENERAL NOTES
(BRIDGE PLATES):

1. ALL STRUCTURAL MEMBERS TO BE 6061-T6 ALUMINUM ALLOY UNLESS OTHERWISE NOTED.
2. CONSTRUCTION IS TO BE WELDED UNLESS OTHERWISE NOTED.
3. ALUMINUM WILL BE STANDARD MILL FINISH UNLESS OTHERWISE NOTED.
4. WELDING WIRE TO BE ER5356 ALUMINUM ALLOY.
5. WELDING SHALL BE IN ACCORDANCE WITH ANSI/AWS D1.2-97 GMAW PROCESS BY EXPERIENCED OPERATORS.
6. DESIGN OF THE ALUMINUM STRUCTURES SHALL CONFORM TO THE 2005 EDITION OF THE ALUMINUM ASSOCIATION SPECIFICATIONS AND GUIDELINES FOR ALUMINUM STRUCTURES.
7. ALL SURFACES, MEMBERS AND THEIR WELDED JOINTS SHALL BE SMOOTH AND FREE FROM SHARP OR JAGGED EDGES.
8. ALL FASTENERS SHALL BE 18-8 STAINLESS STEEL UNLESS OTHERWISE NOTED.
9. BRIDGE SHALL BE DESIGNED FOR A 50 PSF LIVE LOAD WITH A MAXIMUM ALLOWABLE DEFLECTION OF L/180 WHERE "L" IS EQUAL TO THE FREE SPAN LENGTH IN DECIMAL INCHES.
10. WALKING SURFACES SHALL BE DESIGNED TO WITHSTAND A CONCENTRATED LOAD OF 300 LBS OVER A 12" BY 12" AREA.
11. HANDRAIL ASSEMBLIES AND GUARDRAILS SHALL BE DESIGNED TO RESIST A LOAD OF 50 PLF APPLIED IN ANY DIRECTION AT THE TOP OF THE RAIL.
12. HANDRAIL ASSEMBLIES AND GUARDRAILS SHALL BE ABLE TO RESIST A SINGLE CONCENTRATED LOAD OF 200 LBS, APPLIED IN ANY DIRECTION AT ANY POINT ALONG THE TOP OF THE RAIL. THIS LOAD NEED NOT BE ASSUMED TO ACT CONCURRENTLY WITH THE LOADS SPECIFIED IN THE PRECEDING PARAGRAPH.
13. INTERMEDIATE RAILS (ALL THOSE EXCEPT HANDRAILS), BALUSTERS AND PANEL FILLERS SHALL BE DESIGNED TO WITHSTAND A HORIZONTALLY APPLIED NORMAL LOAD OF 50 LBS ON AN AREA EQUAL TO 1 SQUARE FOOT, INCLUDING OPENINGS AND SPACE BETWEEN RAILS.
14. HANDRAILS SHALL BE HELD IN PLACE BY ONE (1) 3/8" x 3" LOCK PIN PER HANDRAIL POST (10 TOTAL POSTS). TWO (2) ADDITIONAL LOCK PINS WILL BE SUPPLIED WITH EACH BRIDGE PLATE.

Existing law protects Sapa Fabricated Products right of possession to this drawing. This drawing may not be used, without written permission of Sapa Fabricated Products, be published, copied, reproduced, manufactured or exploited in any unauthorized way.

sapa:
Sapa Fabricated Products
6599 S.R. 21
Keystone Heights, Florida 32656
Phone: 1(800)648-3696
Fax: 1(352)473-0219

BANTON CONSTRUCTION COMPANY
NORTH HAVEN, CONNECTICUT
ALUMINUM ACCESS BRIDGE PLATE
WITH 42" HIGH TWO LINE REMOVABLE GUARDRAIL

DATE 9/6/2007
JOB NO. 07-6553
FILENAME 14' x 14' BRIDGE PL
REV. R - 0
DRAWN BY PLM
APPROVED BY
SHEET NUMBER COVER

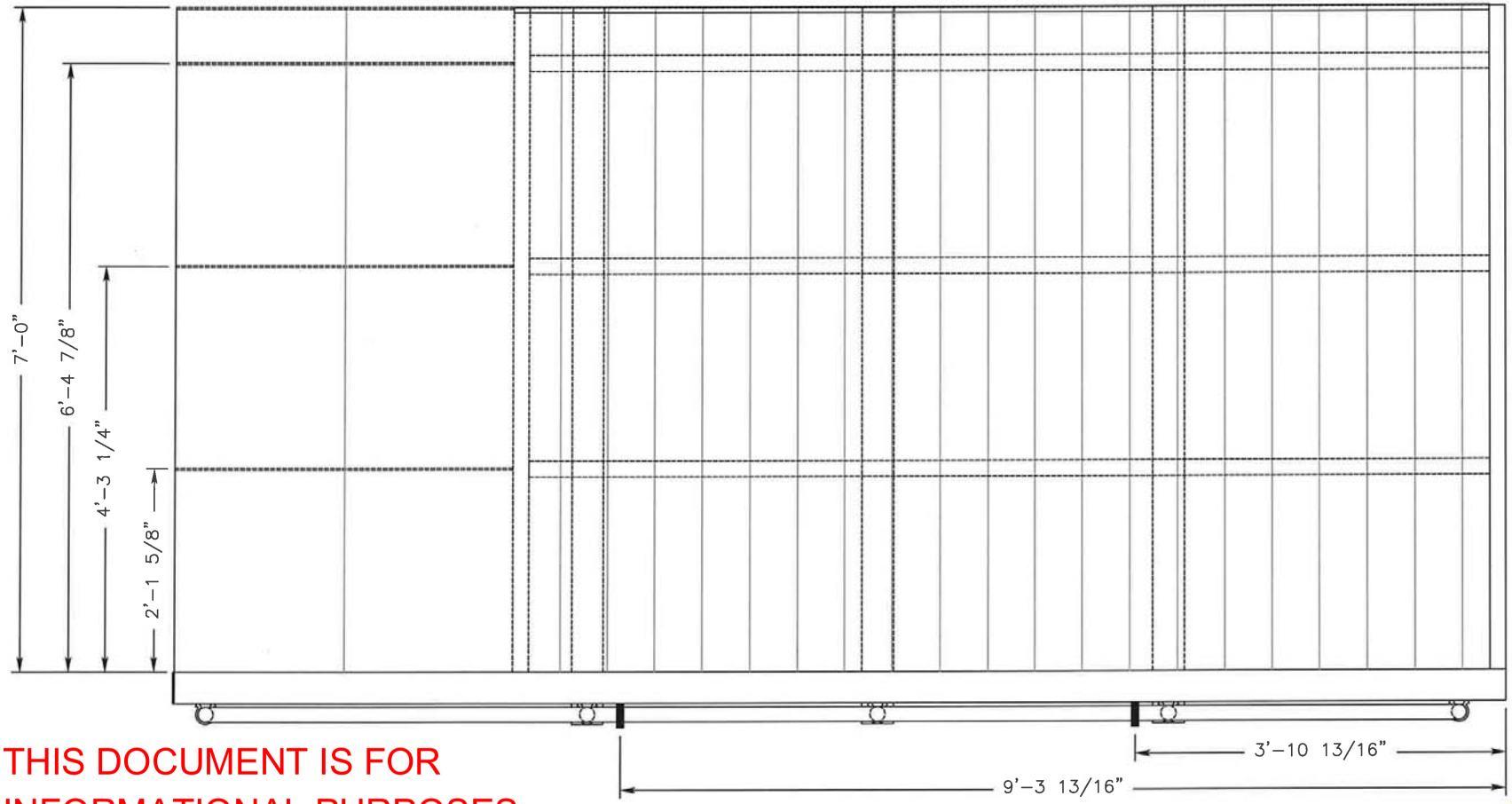

THIS DOCUMENT IS FOR INFORMATIONAL PURPOSES ONLY IN RESPONSE TO QUESTION #101

1/1 PLAN VIEW
7'-0" x 14'-0" BRIDGE PLATE (ONE SIDE)
SCALE: 3/4"=1'-0

STATE OF CONNECTICUT
DANIEL W. McGINNIS
No. 23381
LICENSED
PROFESSIONAL ENGINEER
9/11/07

Existing law protects Sapa Fabricated Products right of possession to this drawing. The design or the drawing must not, without written permission of Sapa Fabricated Products, be published, copied, reproduced, manufactured or exploited in any unauthorized way.

sapa:
Sapa Fabricated Products
6599 S.R. 21
Keystone Heights, Florida 32656
Phone: 1(800)648-3696
Fax: 1(352)473-0219

BANTON CONSTRUCTION COMPANY
NORTH HAVEN, CONNECTICUT
ALUMINIM ACCESS BRIDGE PLATE
WITH 42" HIGH TWO LINE REMOVABLE GUARDRAIL

DATE	9/6/2007
JOB NO.	07-6553
FILENAME	14' x 14' BRIDGE PL
REV.	R - 0
DRAWN BY	PLM
APPROVED BY	
SHEET NUMBER	01

THIS DOCUMENT IS FOR INFORMATIONAL PURPOSES ONLY IN RESPONSE TO QUESTION #101

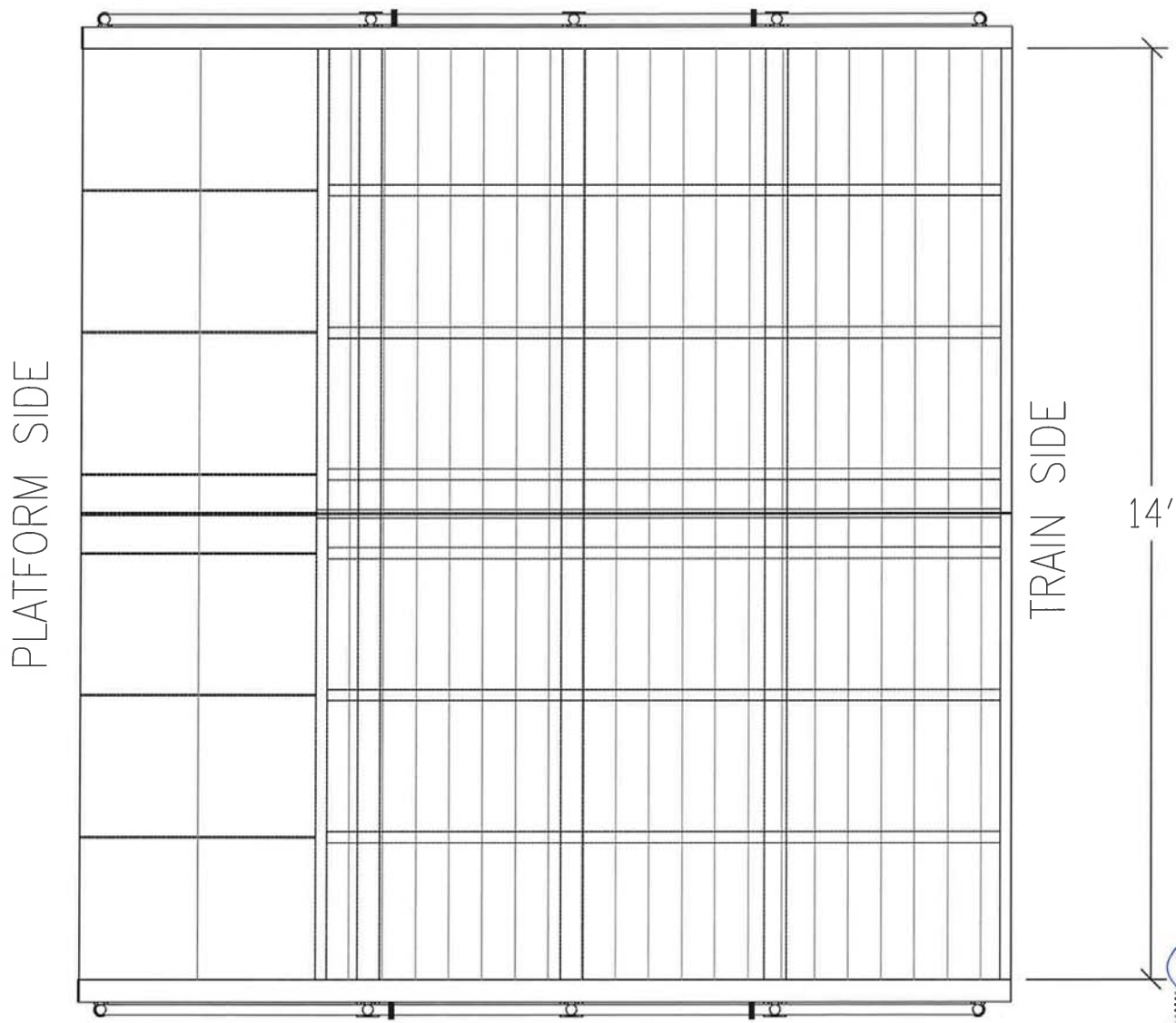

1/2 PLAN VIEW
14'-0" x 14'-0" BRIDGE PLATE (ASSEMBLED)
SCALE: 3/4"=1'-0

STATE OF CONNECTICUT
DANIEL W. McGINNIS
No. 23031
LICENSED
PROFESSIONAL ENGINEER
9/14/07

Existing law protects Sapa Fabricated Products right of possession to this drawing. The design or the drawing must not, without written permission of Sapa Fabricated Products, be published, copied, reproduced, manufactured or exploited in any unauthorized way.

sapa:
Sapa Fabricated Products
6599 S.R. 21
Keystone Heights, Florida 32656
Phone: 1(800)648-3696
Fax: 1(352)473-0219

BANTON CONSTRUCTION COMPANY
NORTH HAVEN, CONNECTICUT
ALUMINIM ACCESS BRIDGE PLATE
WITH 42" HIGH TWO LINE REMOVABLE GUARDRAIL

DATE	9/6/2007
JOB NO.	07-6553
FILENAME	14' x 14' BRIDGE PL
REV.	R - 0
DRAWN BY	PLM
APPROVED BY	
SHEET NUMBER	01

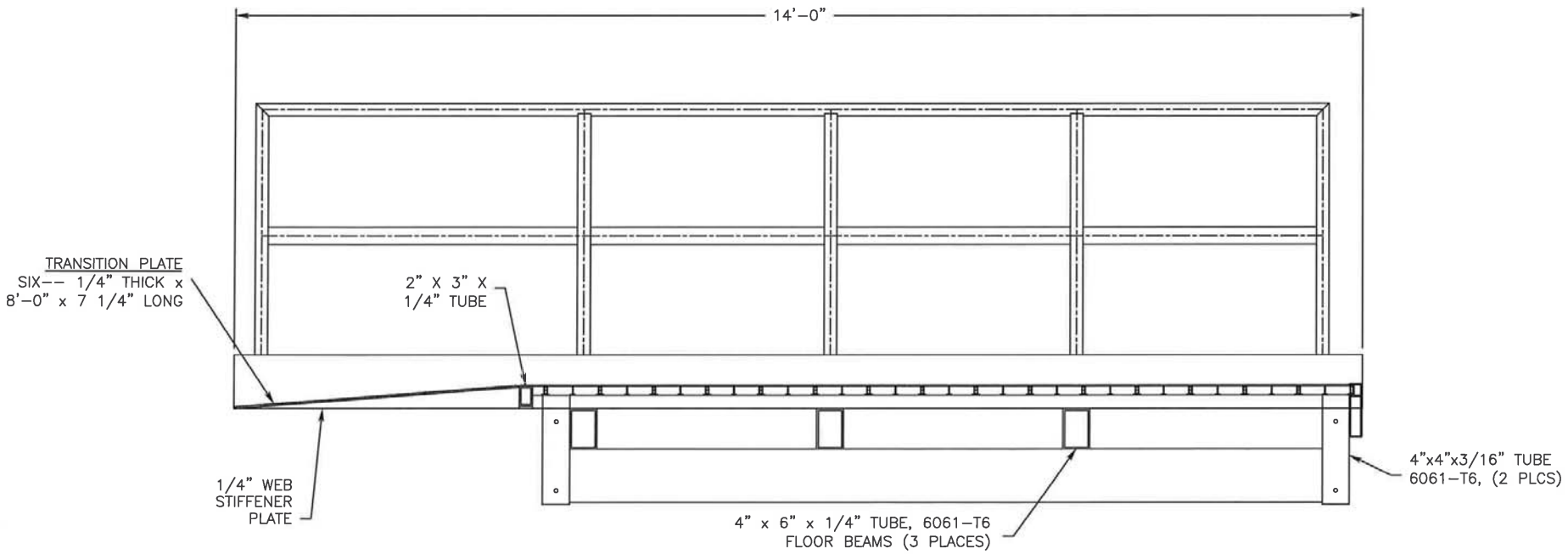

1/3 SECTION VIEW
14'-0" x 14'-0" BRIDGE PLATE
SCALE: NTS

THIS DOCUMENT IS FOR INFORMATIONAL PURPOSES ONLY IN RESPONSE TO QUESTION #101

STATE OF CONNECTICUT
DANIEL W. McGINNIS
No. 23891
LICENSED
PROFESSIONAL ENGINEER

Existing law protects Sapa Fabricated Products right of possession to this drawing. The design or the drawing must not, without written permission of Sapa Fabricated Products, be published, copied, reproduced, manufactured or exploited in any unauthorized way.

sapa:
Sapa Fabricated Products
6599 S.R. 21
Keystone Heights, Florida 32656
Phone: 1(800)648-3696
Fax: 1(352)473-0219

BANTON CONSTRUCTION COMPANY
NORTH HAVEN, CONNECTICUT
ALUMINIM ACCESS BRIDGE PLATE
WITH 42" HIGH TWO LINE REMOVABLE GUARDRAIL

DATE: 9/6/2007
JOB NO: 07-6553
FILENAME: 14' x 14' BRIDGE PL
REV: R - 0
DRAWN BY: PLM
APPROVED BY:
SHEET NUMBER: 02

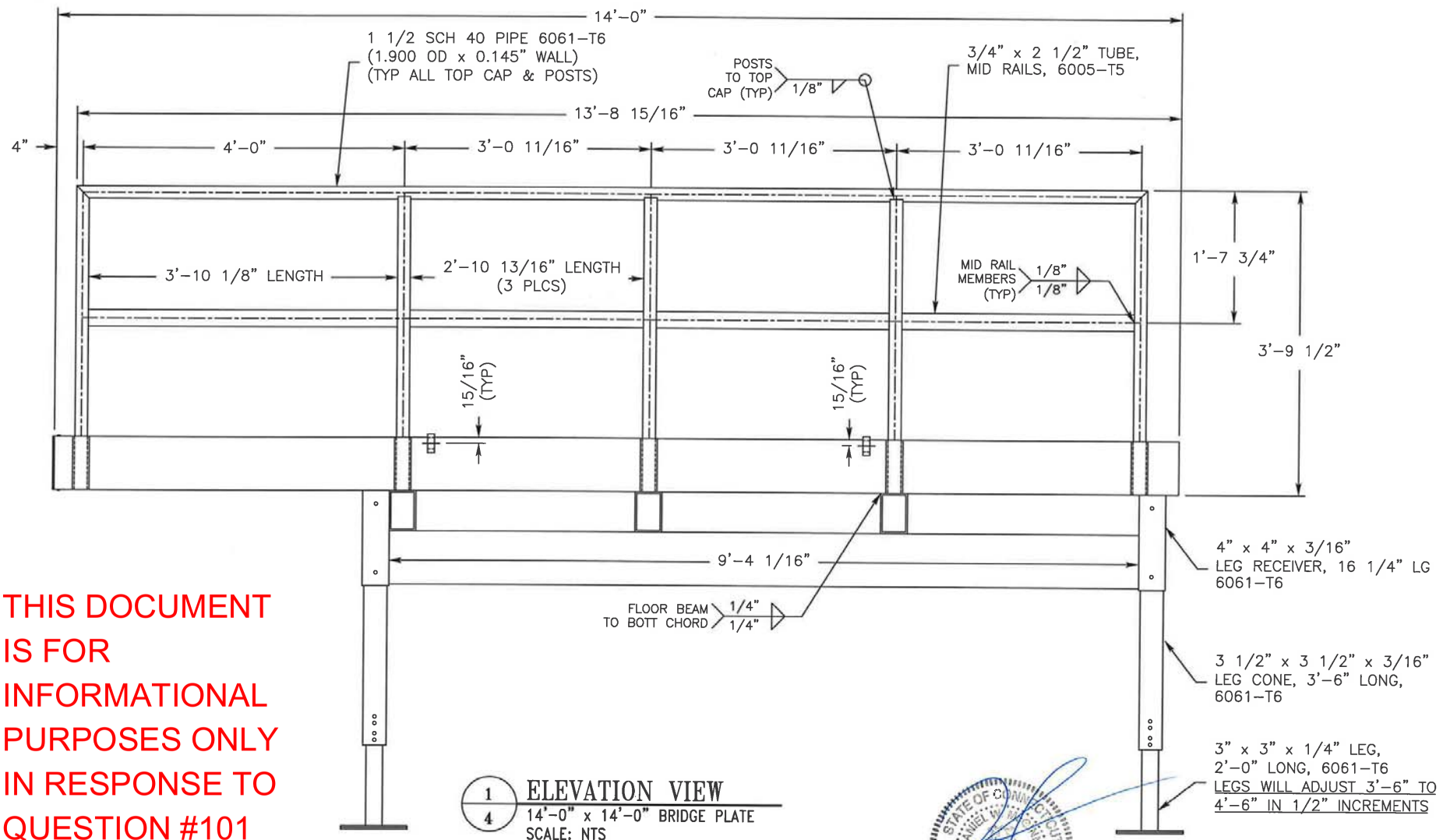

1/4 ELEVATION VIEW
14'-0" x 14'-0" BRIDGE PLATE
SCALE: NTS

THIS DOCUMENT IS FOR INFORMATIONAL PURPOSES ONLY IN RESPONSE TO QUESTION #101

Existing law protects Sapa Fabricated Products right of possession to this drawing. The design on this drawing must not, without written permission from Sapa Fabricated Products, be published, copied, reproduced, manufactured or exploited in any unauthorized way.

Sapa Fabricated Products
6599 S.R. 21
Keystone Heights, Florida 32656
Phone: 1(800)648-3696
Fax: 1(352)473-0219

sapa:

BANTON CONSTRUCTION COMPANY
NORTH HAVEN, CONNECTICUT
ALUMINIM ACCESS BRIDGE PLATE
WITH 42" HIGH TWO LINE REMOVABLE GUARDRAIL

DATE 9/6/2007
JOB NO. 07-6553
FILENAME 14' x 14' BRIDGE PL
REV. R - 0
DRAWN BY PLM
APPROVED BY
SHEET NUMBER 03

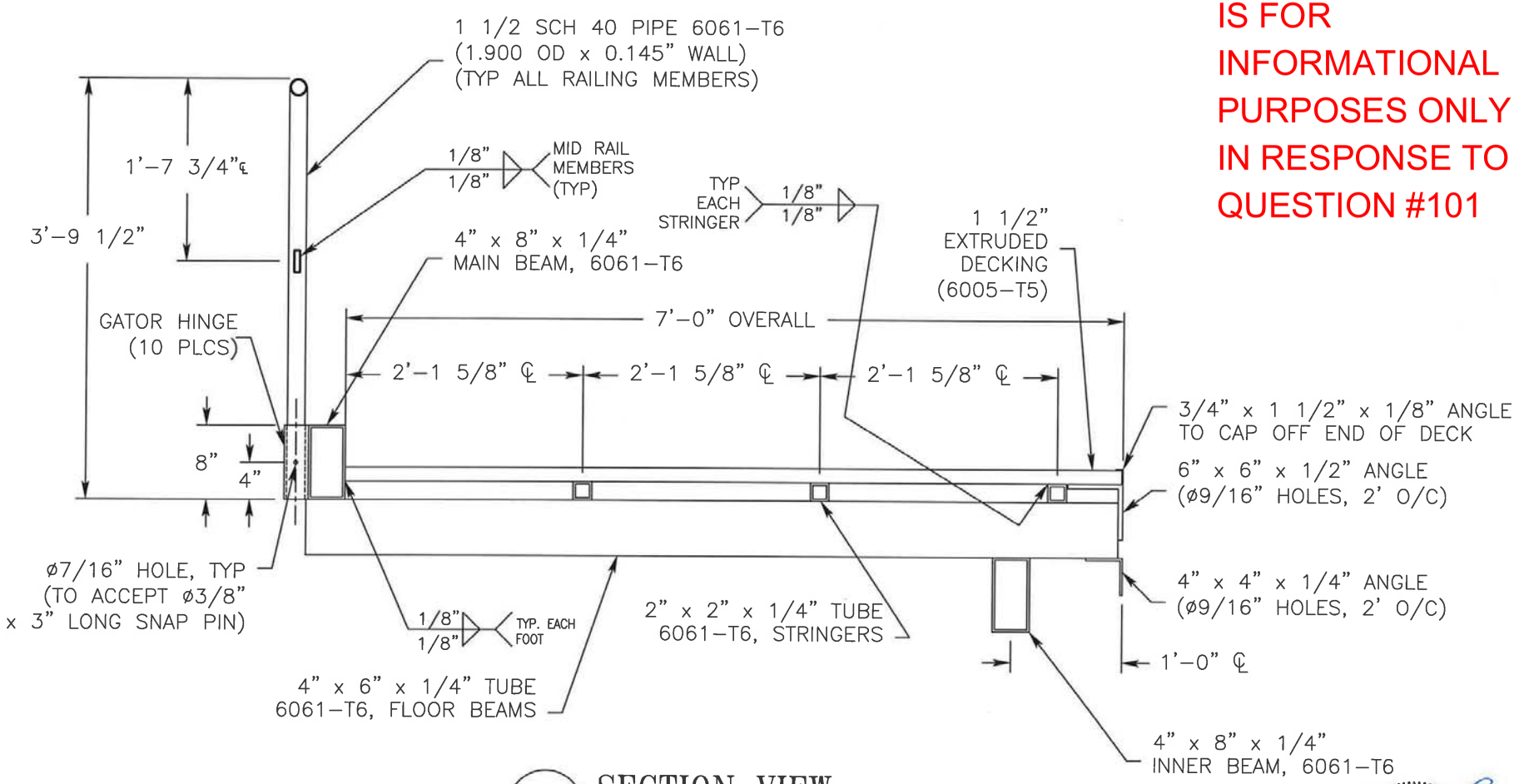

1/5 SECTION VIEW

14'–0" x 14'–0" BRIDGE PLATE

SCALE: 1"=1'–0

THIS DOCUMENT IS FOR INFORMATIONAL PURPOSES ONLY IN RESPONSE TO QUESTION #101

Existing law protects Sapa Fabricated Products right of possession to this drawing. This material may not be used in any way, without written permission of Sapa Fabricated Products, be published, copied, reproduced, manufactured or exploited in any unauthorized way.

Sapa Fabricated Products
6599 S.R. 21
Keystone Heights, Florida 32656
Phone: 1(800)648-3696
Fax: 1(352)473-0219

sapa:

BANTON CONSTRUCTION COMPANY
NORTH HAVEN, CONNECTICUT
ALUMINIM ACCESS BRIDGE PLATE
WITH 42" HIGH TWO LINE REMOVABLE GUARDRAIL

DATE 9/6/2007
JOB NO. 07-6553
FILENAME 14' x 14' BRIDGE PL
REV. R - 0
DRAWN BY PLM
APPROVED BY
SHEET NUMBER 04

THIS DOCUMENT
IS FOR
INFORMATIONAL
PURPOSES ONLY
IN RESPONSE TO
QUESTION #101

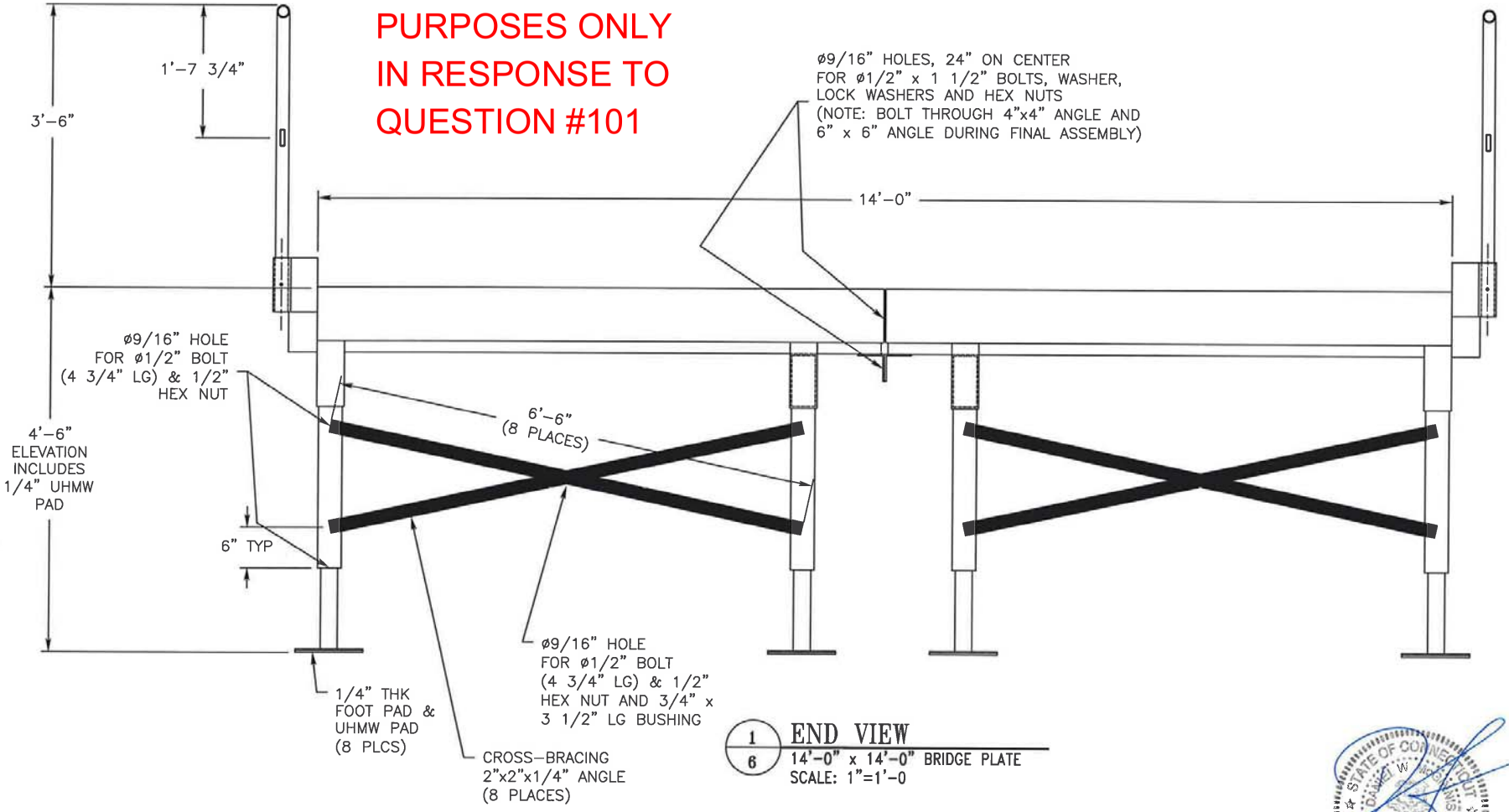

1/6 END VIEW
14'–0" x 14'–0" BRIDGE PLATE
SCALE: 1"=1'–0

Existing law protects Sapa Fabricated Products right of possession to this drawing. This design and drawing is copyrighted, without written permission of Sapa Fabricated Products, be published, copied, reproduced, manufactured or exploited in any unauthorized way.

Sapa Fabricated Products
6599 S.R. 21
Keystone Heights, Florida 32656
Phone: 1(800)648-3696
Fax: 1(352)473-0219

sapa:

BANTON CONSTRUCTION COMPANY
NORTH HAVEN, CONNECTICUT
ALUMINIM ACCESS BRIDGE PLATE
WITH 42" HIGH TWO LINE REMOVABLE GUARDRAIL

DATE 9/6/2007
JOB NO. 07-6553
FILENAME 14' x 14' BRIDGE PL
REV. R - 0
DRAWN BY PLM
APPROVED BY
SHEET NUMBER 05

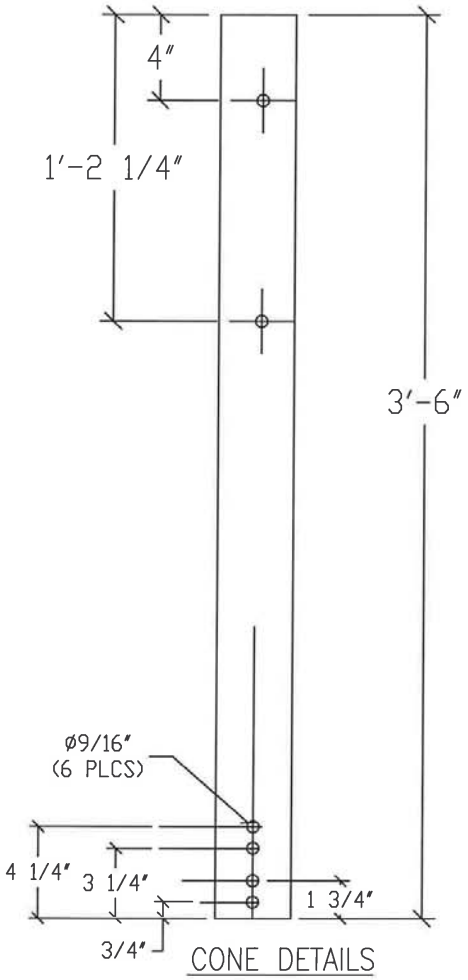

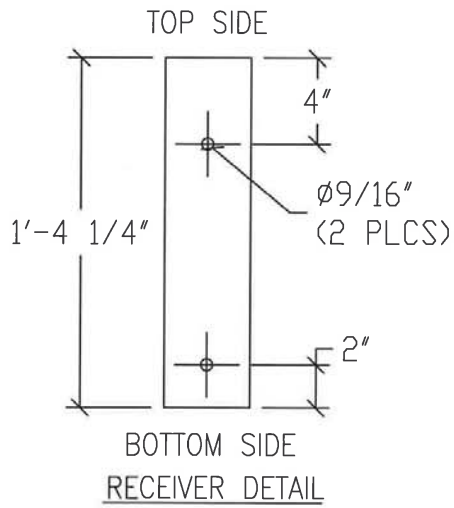

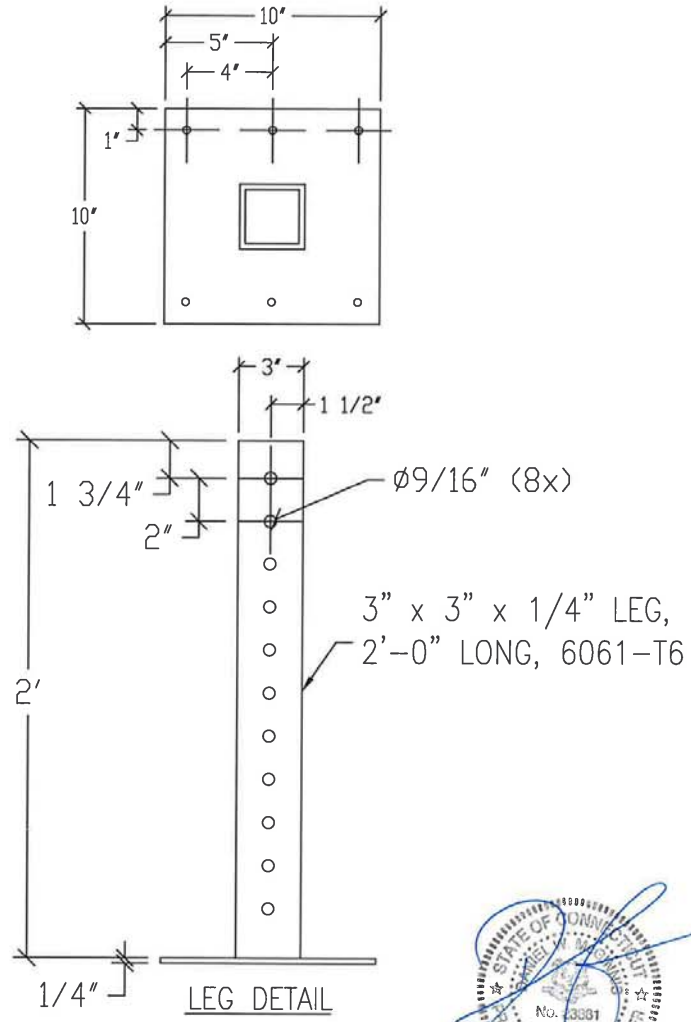

1/6 **DETAILS**

BRIDGE PLATE COMPONENTS
SCALE: NTS

THIS DOCUMENT IS FOR INFORMATIONAL PURPOSES ONLY IN RESPONSE TO QUESTION #101

STATE OF CONNECTICUT
SAMUEL W. MAGNANI
No. 23881
LICENSED
PROFESSIONAL ENGINEER

Existing law protects Sapa Fabricated Products right of possession to this drawing. The design or the drawing must not, without written permission of Sapa Fabricated Products, be published, copied, reproduced, manufactured or exploited in any unauthorized way.

sapa:
Sapa Fabricated Products
6599 S.R. 21
Keystone Heights, Florida 32656
Phone: 1(800)648-3696
Fax: 1(352)473-0219

BANTON CONSTRUCTION COMPANY
NORTH HAVEN, CONNECTICUT
ALUMINIM ACCESS BRIDGE PLATE
WITH 42" HIGH TWO LINE REMOVABLE GUARDRAIL

DATE 9/6/2007
JOB NO. 07-6553
FILENAME 14' x 14' BRIDGE PL
REV. R - 0
DRAWN BY PLM
APPROVED BY
SHEET NUMBER 05

THIS DOCUMENT IS FOR INFORMATIONAL PURPOSES ONLY IN RESPONSE TO QUESTION #101

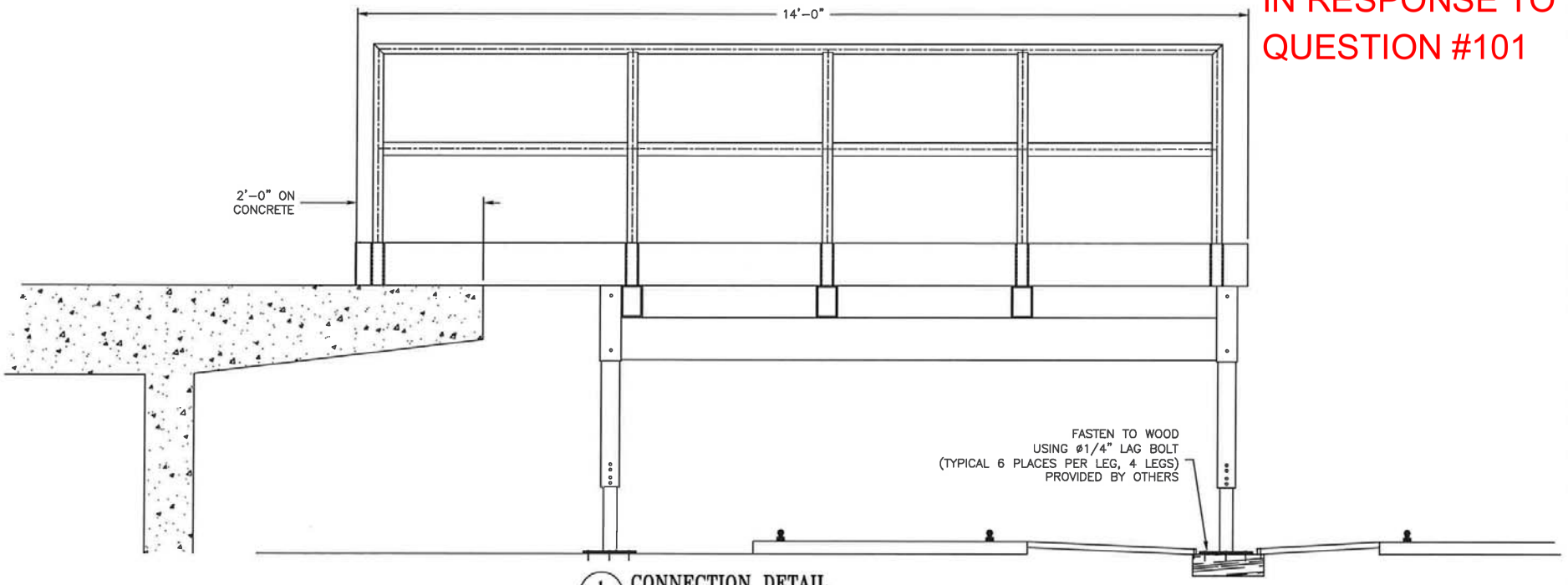

1/8 CONNECTION DETAIL
14'-0" x 14'-0" BRIDGE PLATE
SCALE: NTS

STATE OF CONNECTICUT
DANIEL M. MANNING
No. 23881
LICENSED PROFESSIONAL ENGINEER
9/14/07

Existing law protects Sapa Fabricated Products right of possession to this drawing. The possessor may not reproduce, without written permission of Sapa Fabricated Products, be published, copied, reproduced, manufactured or exploited in any unauthorized way.

sapa:
Sapa Fabricated Products
6599 S.R. 21
Keystone Heights, Florida 32656
Phone: 1(800)648-3696
Fax: 1(352)473-0219

BANTON CONSTRUCTION COMPANY
NORTH HAVEN, CONNECTICUT
ALUMINUM ACCESS BRIDGE PLATE
WITH 42" HIGH TWO LINE REMOVABLE GUARDRAIL

DATE 9/6/2007
JOB NO. 07-6553
FILENAME 14' x 14' BRIDGE PL
REV. R - 0
DRAWN BY PLM
APPROVED BY
SHEET NUMBER 08