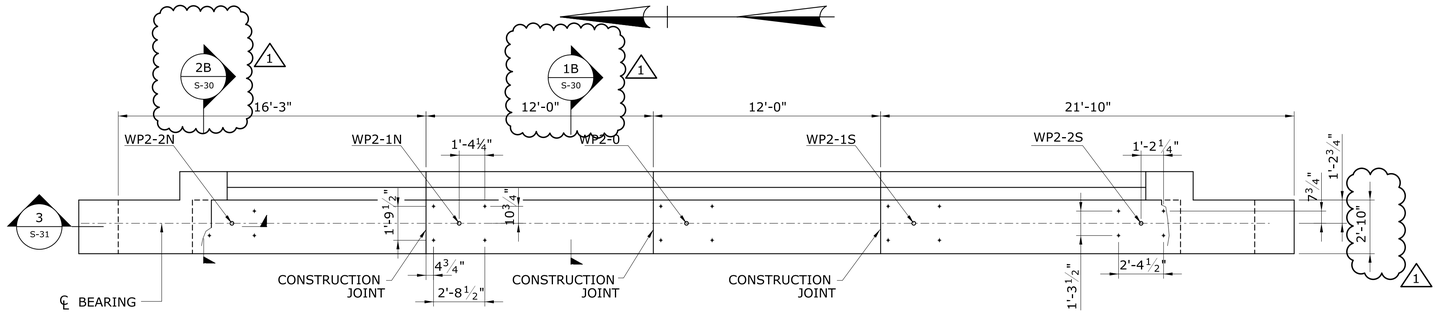

BRIDGE SEAT - PLAN (EAST ABUTMENT)

SCALE: ¼"=1'-0"

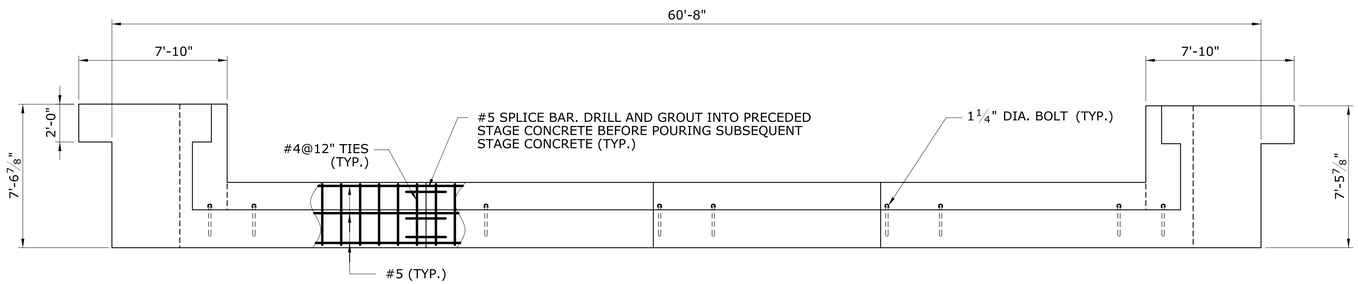

BRIDGE SEAT - ELEVATION (EAST ABUTMENT)

SCALE: ¼"=1'-0"

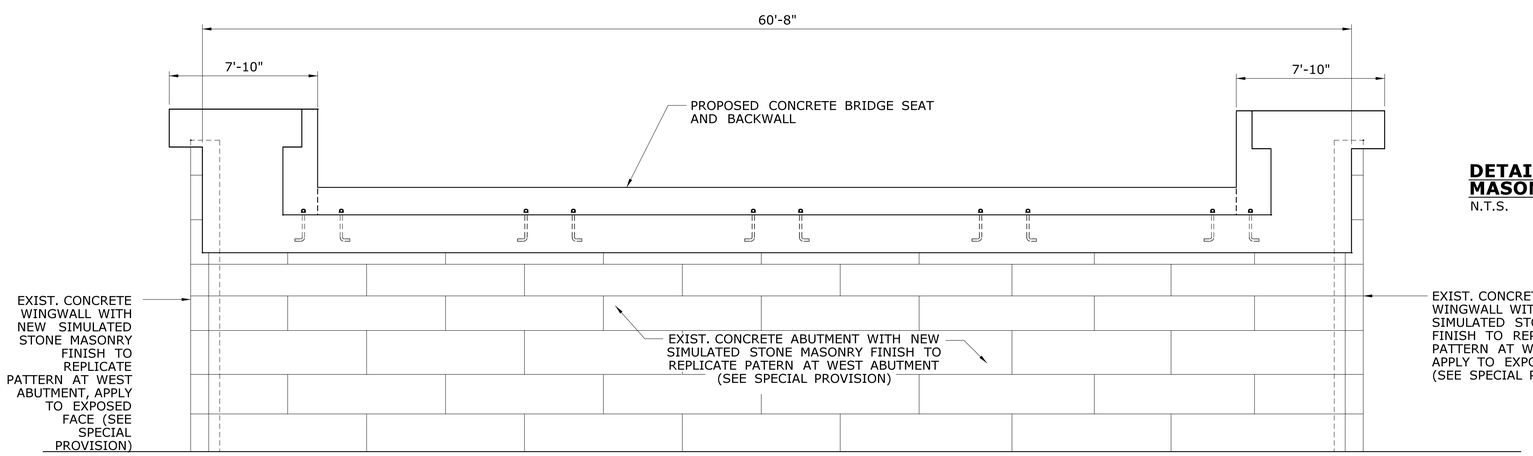

ELEVATION (EAST ABUTMENT)

SCALE: ¼" = 1'-0"

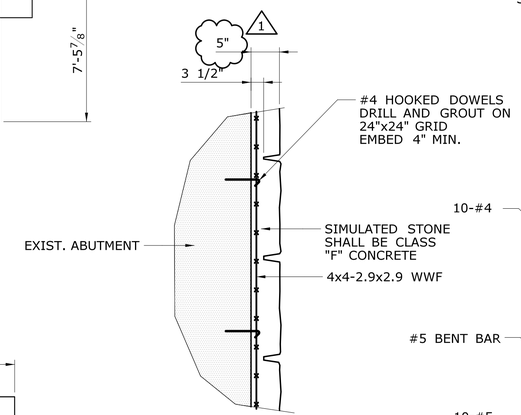

DETAIL OF SIMULATED STONE MASONRY FINISH

N.T.S.

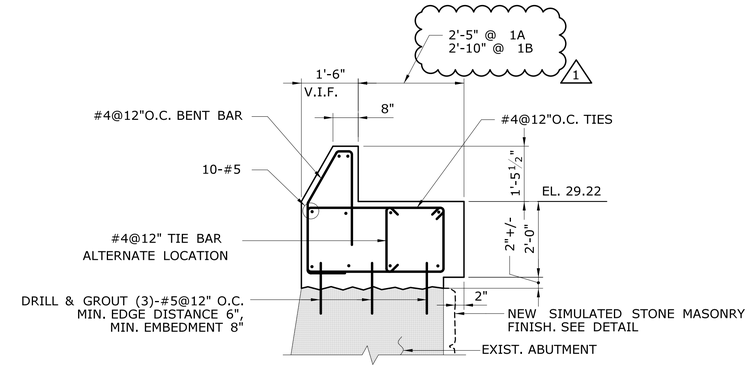

NOTE: ANCHOR BOLTS NOT SHOWN FOR CLARITY

SECTION 1A S-31 / 1B S-30

SCALE: ½" = 1'-0"

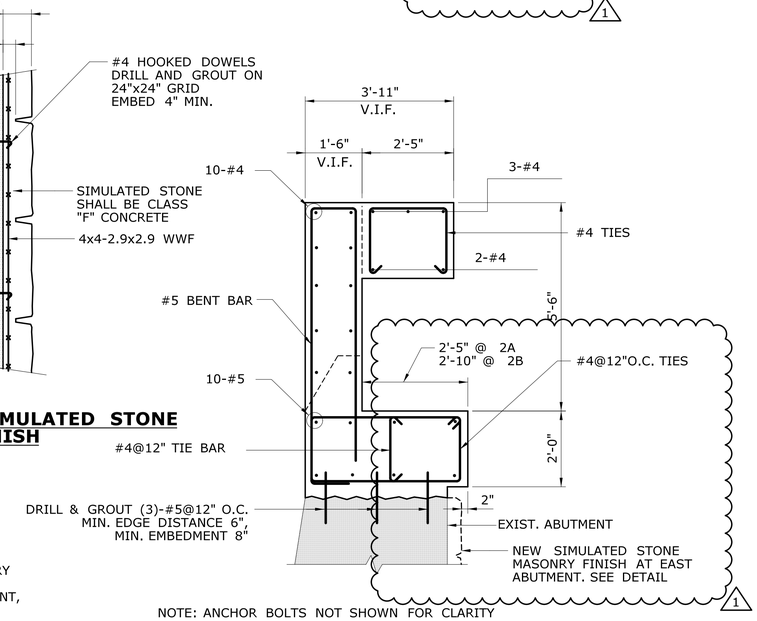

NOTE: ANCHOR BOLTS NOT SHOWN FOR CLARITY

SECTION 2A S-31 / 2B S-30

SCALE: ½" = 1'-0"

Arthur DiCesare 2014.03.20 16:20:18-04'00'

NOTE:

1. SIMULATED STONE MASONRY SHALL BE PAID FOR UNDER SPECIAL PROVISION ITEM #0601088A "CONCRETE FORM LINERS" AND ITEM #0601201 "CLASS "F" CONCRETE".

SURVEY NOTES:

1. HORIZONTAL GRID BASED ON CONNECTICUT COORDINATE GRID (NAD 1983).
2. VERTICAL DATUM BASED ON NGVD OF 1929.

ADDENDUM NO. 3

REV.	DATE	REVISION DESCRIPTION	SHEET NO.
1	03/18/14	MODIFIED DIMENSIONS	05.31.A3

THE INFORMATION, INCLUDING ESTIMATED QUANTITIES OF WORK, SHOWN ON THESE SHEETS IS BASED ON LIMITED INVESTIGATIONS BY THE STATE AND IS IN NO WAY WARRANTED TO INDICATE THE CONDITIONS OF ACTUAL QUANTITIES OF WORK WHICH WILL BE REQUIRED.

Plotted Date: 3/20/2014

DESIGNER/DRAFTER: S.Yarmolinsky, P.E.
CHECKED BY: A.DiCesare, P.E.
SCALE AS NOTED

STATE OF CONNECTICUT
DEPARTMENT OF TRANSPORTATION

Filename: ...\SB_MSH_Br03948_0301_0092_S-30.dgn

SIGNATURE/BLOCK: ADA — A.DiCesare Associates, P.C. 690 Clinton Avenue Bridgeport, CT 06604 203-696-0444 www.adicesarepc.com
APPROVED BY: A.DiCesare DATE: 11/27/2013

PROJECT TITLE: REHABILITATION OF METRO-NORTH RAILROAD BRIDGE NO. 03948R AND BRIDGE NO. 03955R

TOWN: GREENWICH

DRAWING TITLE: BRIDGE ABUTMENT SEAT AND ELEVATIONS - 1

PROJECT NO. 301-092
DRAWING NO. S-30
SHEET NO. 05.31.A3

Connecticut Department of Transportation
QA/QC Format Check

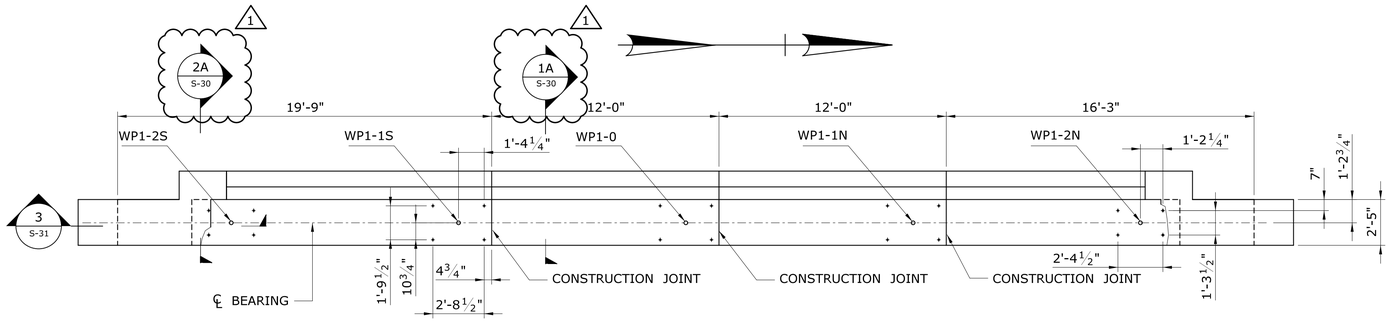

BRIDGE SEAT - PLAN (WEST ABUTMENT)

SCALE: ¼" = 1'-0"

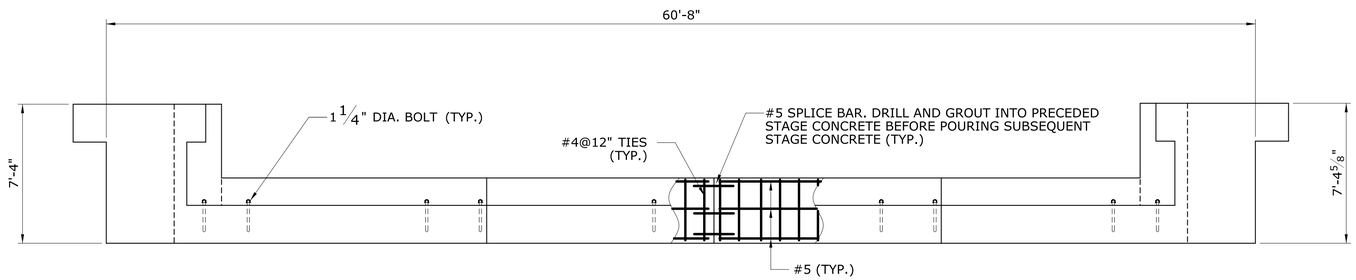

BRIDGE SEAT - ELEVATION (WEST ABUTMENT)

SCALE: ¼" = 1'-0"

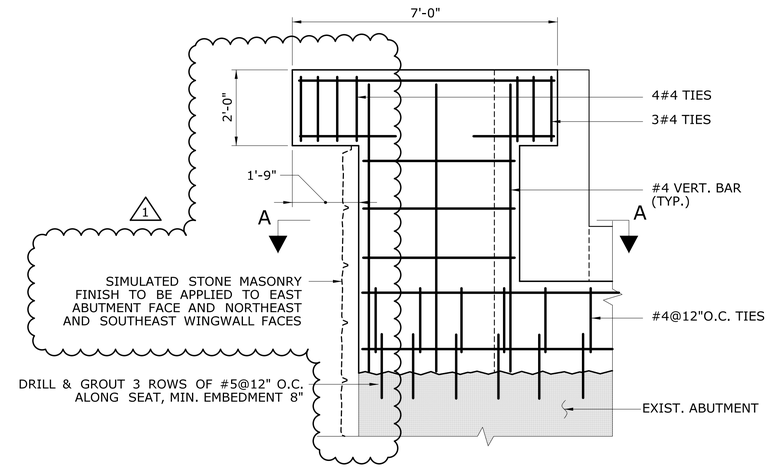

NOTE: ANCHOR BOLTS NOT SHOWN FOR CLARITY

SECTION 3

SCALE: ½" = 1'-0" S-31

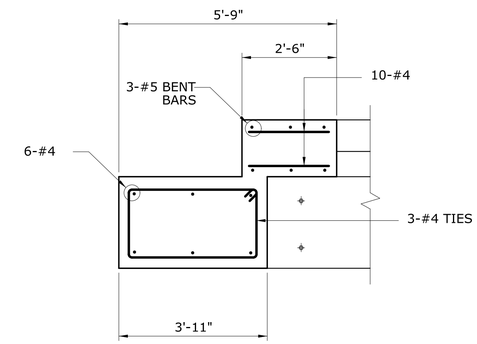

SECTION A-A

SCALE: ½"=1'-0"

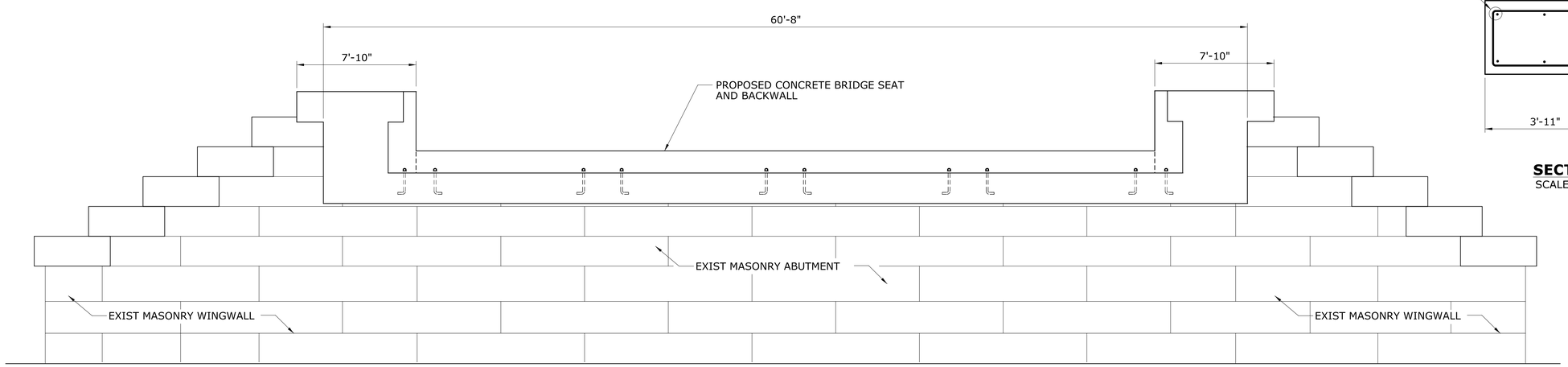

ELEVATION (WEST ABUTMENT)

SCALE: ¼" = 1'-0"

SURVEY NOTES:

1. HORIZONTAL GRID BASED ON CONNECTICUT COORDINATE GRID (NAD 1983).
2. VERTICAL DATUM BASED ON NGVD OF 1929.

ADDENDUM NO. 3

REV.	DATE	REVISION DESCRIPTION	SHEET NO.
1	03/18/14	MODIFIED DIMENSIONS	05.32.A3

THE INFORMATION, INCLUDING ESTIMATED QUANTITIES OF WORK, SHOWN ON THESE SHEETS IS BASED ON LIMITED INVESTIGATIONS BY THE STATE AND IS IN NO WAY WARRANTED TO INDICATE THE CONDITIONS OF ACTUAL QUANTITIES OF WORK WHICH WILL BE REQUIRED.

Plotted Date: 3/20/2014

DESIGNER/DRAFTER: S.Yarmolinsky, P.E.

CHECKED BY: A.DiCesare, P.E.

SCALE AS NOTED

STATE OF CONNECTICUT
DEPARTMENT OF TRANSPORTATION

Filename: ...\SB_MSH_Br03948_0301_0092_S-31.dgn

SIGNATURE/BLOCK: ADA — A.DiCesare Associates, P.C., 690 Clinton Avenue, Bridgeport, CT 06604, 203-696-0444, www.adicesarepc.com

APPROVED BY: A.DiCesare DATE: 11/27/2013

STATE OF CONNECTICUT — ARTHUR J. DICESARE III — LICENSED PROFESSIONAL ENGINEER

PROJECT TITLE: REHABILITATION OF METRO-NORTH RAILROAD BRIDGE NO. 03948R AND BRIDGE NO. 03955R

TOWN: GREENWICH

DRAWING TITLE: BRIDGE ABUTMENT SEAT AND ELEVATIONS - 2

PROJECT NO. 301-092

DRAWING NO. S-31

SHEET NO. 05.32.A3