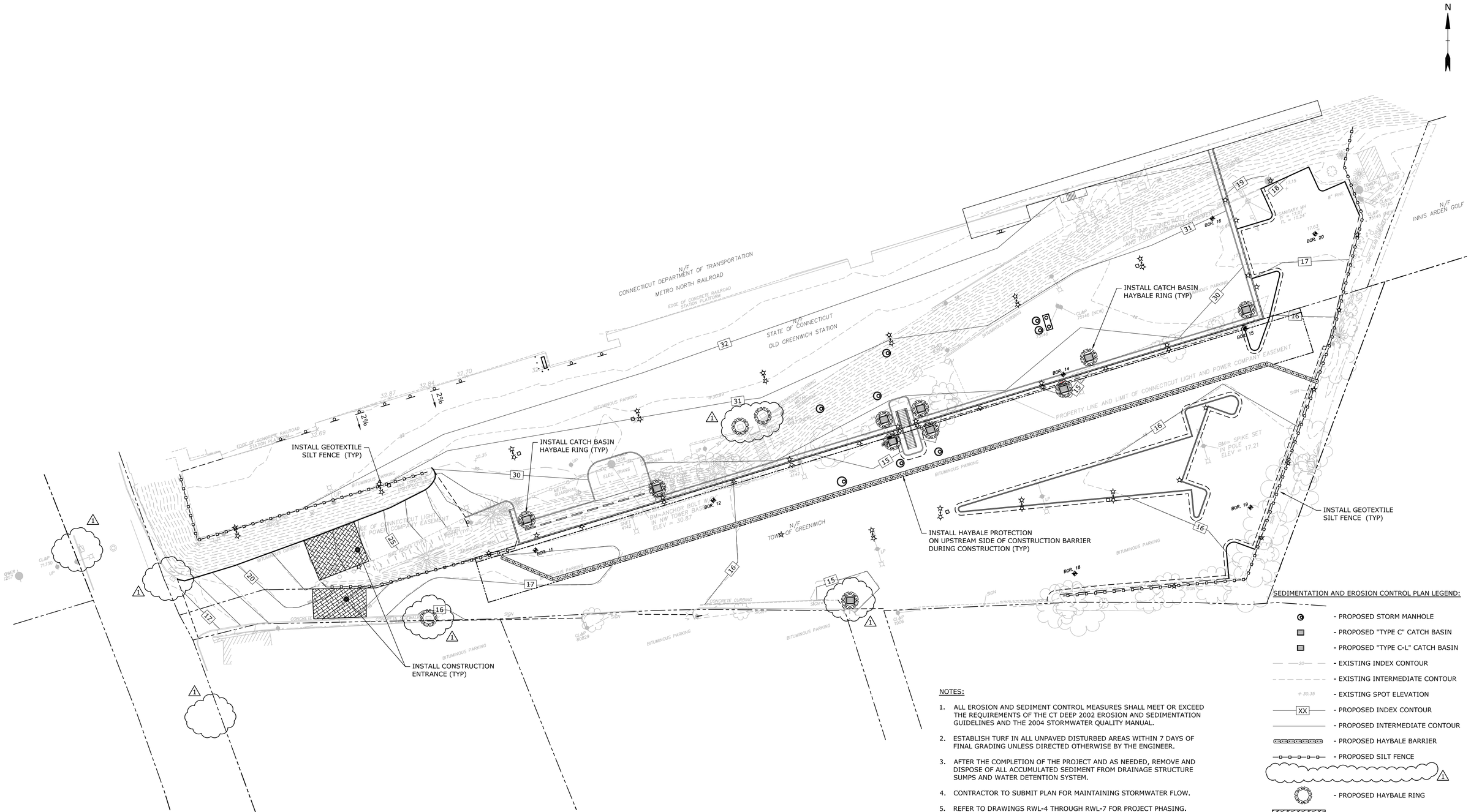

SEDIMENTATION AND EROSION CONTROL PLAN LEGEND:

- PROPOSED STORM MANHOLE
- PROPOSED "TYPE C" CATCH BASIN
- PROPOSED "TYPE C-L" CATCH BASIN
- EXISTING INDEX CONTOUR
- EXISTING INTERMEDIATE CONTOUR
- EXISTING SPOT ELEVATION
- PROPOSED INDEX CONTOUR
- PROPOSED INTERMEDIATE CONTOUR
- PROPOSED HAYBALE BARRIER
- PROPOSED SILT FENCE
- PROPOSED HAYBALE RING
- PROPOSED CONSTRUCTION ENTRANCE

NOTES:

1. ALL EROSION AND SEDIMENT CONTROL MEASURES SHALL MEET OR EXCEED THE REQUIREMENTS OF THE CT DEEP 2002 EROSION AND SEDIMENTATION GUIDELINES AND THE 2004 STORMWATER QUALITY MANUAL.
2. ESTABLISH TURF IN ALL UNPAVED DISTURBED AREAS WITHIN 7 DAYS OF FINAL GRADING UNLESS DIRECTED OTHERWISE BY THE ENGINEER.
3. AFTER THE COMPLETION OF THE PROJECT AND AS NEEDED, REMOVE AND DISPOSE OF ALL ACCUMULATED SEDIMENT FROM DRAINAGE STRUCTURE SUMPS AND WATER DETENTION SYSTEM.
4. CONTRACTOR TO SUBMIT PLAN FOR MAINTAINING STORMWATER FLOW.
5. REFER TO DRAWINGS RWL-4 THROUGH RWL-7 FOR PROJECT PHASING. COORDINATE INSTALLATION OF S & E CONTROLS WITH PROJECT PHASING.

STATE OF CONNECTICUT
JOHN W. BLOCK
BASE
LICENSED
PROFESSIONAL ENGINEER

John W Block
2014.04.02
10:23:50
-04'00'

ADDENDUM NO. 3

REV.	DATE	REVISION DESCRIPTION	SHEET NO.
1	3/18/14	REVISED DRAWING	11.12.A3

THE INFORMATION, INCLUDING ESTIMATED QUANTITIES OF WORK, SHOWN ON THESE SHEETS IS BASED ON LIMITED INVESTIGATIONS BY THE STATE AND IS IN NO WAY WARRANTED TO INDICATE THE CONDITIONS OF ACTUAL QUANTITIES OF WORK WHICH WILL BE REQUIRED.

Plotted Date: Apr 01, 2014-1:51pm

DESIGNER/DRAFTER: MDS
CHECKED BY: JAR
SCALE IN FEET: 0 30 60
SCALE 1"=30'

STATE OF CONNECTICUT
DEPARTMENT OF TRANSPORTATION

FILENAME: SE-A0992-01.dwg

SIGNATURE/BLOCK:
Tighe&Bond
1000 BRIDGEPORT AVE
SUITE 320
SHELTON, CT 06484
APPROVED BY: J. BLOCK
DATE: 11/20/2013

PROJECT TITLE:
REHABILITATION OF METRO-NORTH RAILROAD BRIDGE NO. 03948R AND BRIDGE NO. 03955R

TOWN: GREENWICH

DRAWING TITLE: SEDIMENTATION AND EROSION CONTROL PLAN

PROJECT NO. 301-092
DRAWING NO. C-10
SHEET NO. 11.12.A3

04/01/2014

Connecticut Department of Transportation
QA/QC Format Check

Apr 01, 2014-1:51pm Plotted By: JAR
Tighe & Bond, Inc. \\SRV\Projects\A\A0992\Drawing\Addendum\Addendum 3\Sheets\SE-A0992-01.dwg

SEDIMENTATION AND EROSION CONTROL NARRATIVE

SEDIMENTATION AND EROSION CONTROL MEASURES WILL BE INSTALLED PRIOR TO AND MAINTAINED DURING CONSTRUCTION IN ORDER TO MINIMIZE ADVERSE IMPACTS FROM CONSTRUCTION ACTIVITIES.

ALL SEDIMENTATION AND EROSION CONTROL MEASURES PROPOSED FOR THIS DEVELOPEMENT HAVE BEEN DESIGNED IN ACCORDANCE WITH THE "2002 CONNECTICUT GUIDELINES FOR SOIL EROSION AND SEDIMENTATION CONTROL" AS PUBLISHED BY THE CONNECTICUT COUNCIL ON SOIL EROSION AND WATER CONSERVATION. ADDITIONAL GUIDELINES HAVE ALSO BEEN FOLLOWED THAT ARE AVAILABLE FROM THE CONNECTICUT DEPARTMENT OF ENVIRONMENTAL PROTECTION AS RECOMMENDED FOR SEDIMENTATION CONTROL DURING CONSTRUCTION ACTIVITIES.

GENERAL:

1. THE PROPOSED PROJECT IS ENTITLED "REHABILITATION OF SOUND BEACH AVENUE RAILROAD BRIDGE (MP31.29) STATE BRIDGE No. 03948R".

2. ESTIMATED:
   PROJECT START: SPRING 2014.
   PROJECT COMPLETION: FALL 2015.

3. EROSION CONTROL NARRATIVE REFERS TO SHEET C-010.

4. THE SITE IS LOCATED ON SOUND BEACH AVENUE, GREENWICH CONNECTICUT.

CONSTRUCTION SEQUENCE:

1. CONDUCT A PRECONSTRUCTION MEETING WITH THE OWNER OR THE OWNER'S REPRESENTATIVE, DESIGN ENGINEER, SITE ENGINEER, CONTRACTOR AND SITE SUPERINTENDENT TO ESTABLISH THE LIMITS OF CONSTRUCTION, CONSTRUCTION PROCEDURES AND MATERIAL STOCKPILE AREAS.

2. FIELD STAKE THE LIMITS OF CONSTRUCTION.

3. INSTALL ALL APPLICABLE SOIL AND EROSION CONTROL MEASURES AROUND THE PERIMETER OF THE SITE TO THE EXTENT POSSIBLE. THIS WILL INCLUDE SILTATION FENCE AROUND THE PROJECT AS SHOWN ON THE PLANS.

4. INSTALL CONSTRUCTION ENTRANCE IN THE AREAS SHOWN ON THE PLANS. ALL CONSTRUCTION ACCESS SHALL BE INTO THE SITE THROUGH THE CONSTRUCTION ENTRANCE.

5. ESTABLISH TEMPORARY STAGING AREA.

6. CONSTRUCT DRIVEWAYS AND SITE RETAINING WALLS.

7. INSTALL PROPOSED UTILITIES AND RELOCATE EXISTING UTILITIES AS SHOWN ON THE PLANS.

8. INSTALL DRAINAGE NETWORK TO THE MAXIMUM EXTENT PRACTICABLE. GRADE THE AREA AROUND THE STORM DRAINAGE SYSTEM AS NECESSARY.

9. INSTALL HAYBALE PROTECTION AROUND ALL PROPOSED INLETS AS SHOWN ON THE PLANS.

10. BEGIN PAVING OF DRIVEWAYS, PARKING AREAS, AND SIDEWALKS.

11. FINE GRADE SITE.

12. COMPLETE LANDSCAPING.

13. COMPLETE SITE PUNCH LIST ITEMS.

14. REMOVE ALL TEMPORARY SEDIMENTATION AND EROSIONS CONTROL STRUCTURES AND CLEAN ALL NEW AND EXISTING CATCH BASINS AND PIPING ON THE SITE. REMOVE ANY SEDIMENT AND DISPOSE OF OFF-SITE.

SEDIMENTATION AND EROSION CONTROL NOTES

1. ALL SEDIMENTATION AND EROSION CONTROL MEASURES SHALL BE CONSTRUCTED IN ACCORDANCE WITH THE STANDARDS AND SPECIFICATIONS OF THE "2002 CONNECTICUT GUIDELINES FOR SOIL EROSION AND SEDIMENT CONTROL", DEP BULLETIN NO. 34, AND ALL AMENDMENTS AND ADDENDA THERETO AS PUBLISHED BY THE CONNECTICUT DEPARTMENT OF ENVIRONMENTAL PROTECTION.

2. LAND DISTURBANCE SHALL BE KEPT TO THE MINIMUM NECESSARY FOR CONSTRUCTION OPERATIONS.

3. INSTALL ALL EROSION CONTROL MEASURES AS SHOWN ON THE PLAN AND ELSEWHERE AS ORDERED BY CTDOT OR THE TOWN OF GREENWICH.

4. PROTECT ALL CATCH BASINS WITH A SILT SACK, HAYBALE RING, SILT FENCE OR BLOCK AND STONE INLET PROTECTION THROUGHOUT THE CONSTRUCTION PERIOD AND UNTIL ALL DISTURBED AREAS ARE THOROUGHLY STABILIZED
.

5. WHENEVER POSSIBLE, INSTALL EROSION AND SEDIMENT CONTROL MEASURES PRIOR TO CONSTRUCTION. SEE "EROSION CONTROL NARRATIVE".

6. INSTALL ADDITIONAL CONTROL MEASURES DURING THE CONSTRUCTION PERIOD AS ORDERED BY THE ENGINEER.

7. MAINTAIN ALL SEDIMENTATION AND EROSION CONTROL MEASURES IN EFFECTIVE CONDITION THROUGHOUT THE CONSTRUCTION PERIOD.

8. SEDIMENT REMOVED SHALL BE DISPOSED OF OFF-SITE OR IN A MANNER AS REQUIRED BY THE PROJECT CIVIL ENGINEER.

9. THE CONSTRUCTION CONTRACTOR SHALL BE RESPONSIBLE FOR CONSTRUCTION AND MAINTENANCE OF ALL CONTROL MEASURES THROUGHOUT THE CONSTRUCTION PERIOD.

10. PROTECT ALL DISTURBED AREAS EXPOSED FOR MORE THAN 30 DAYS WITH A TEMPORARY VEGETATIVE COVER. SEED THESE AREAS WITH A PERENNIAL RYEGRASS AT THE RATE OF 40 LBS. PER ACRE (1 LB. PER 1,000 SQ. FT.). APPLY SOIL AMENDMENTS AND MULCH AS REQUIRED TO ESTABLISH A UNIFORM STAND OF VEGETATION OVER ALL DISTURBED AREAS.

11. THE CONSTRUCTION CONTRACTOR SHALL UTILIZE APPROVED METHODS/MATERIALS FOR PREVENTING THE BLOWING AND MOVEMENT OF DUST FROM EXPOSED SOIL SURFACES ONTO ADJACENT PROPERTIES AND SITE AREAS.

12. THE CONSTRUCTION CONTRACTOR SHALL MAINTAIN A SUPPLY OF SILT FENCE/HAY BALES AND ANTI-TRACKING CRUSHED STONE ON SITE FOR EMERGENCY REPAIRS.

13. THE CONTRACTOR SHALL INSPECT WEEKLY AT A MINIMUM, AND BEFORE ALL FORECASTED STORMS ALL DRAINAGE STRUCTURES AND CLEAN THEM AS NEEDED TO PREVENT THE BUILD-UP OF SILT.

14. THE CONSTRUCTION CONTRACTOR SHALL CAREFULLY COORDINATE THE PLACEMENT OF EROSION CONTROL MEASURES WITH THE PHASING OF CONSTRUCTION.

15. KEEP ALL PAVED AREAS AND ROADWAYS CLEAN. SWEEP BEFORE FORECASTED STORMS.

16. TREAT ALL UNPAVED SURFACES WITH 4" MINIMUM OF TOPSOIL PRIOR TO FINAL STABILIZATION.

17. INSTALL HAYBALE BARRIERS AND SILT FENCING ALONG THE TOE OF CRITICAL CUT AND FILL SLOPES.

18. COVER ALL TRUCKS LEAVING THE SITE.

19. CHECK ALL SEDIMENTATION AND EROSION CONTROLS WEEKLY AND/OR AFTER EACH RAINFALL EVENT. MAKE NECESSARY REPAIRS IMMEDIATELY.

20. INSPECT AND REPAIR EROSION CONTROLS PRIOR TO FORECASTED RAIN EVENTS.

21. REMOVE EROSION CONTROLS WHEN ALL DISTURBED AREAS HAVE BEEN STABILIZED AND THE TOWN HAS PROVIDED AUTHORIZATION. DISTURBED AREAS SHALL BE SEEDED AND MULCHED.

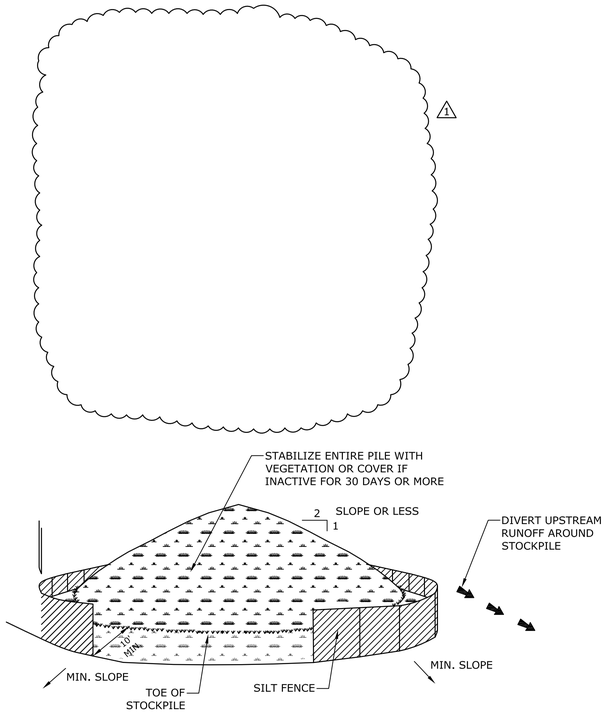

INSTALLATION NOTES:

1. AREA CHOSEN FOR STOCKPILING OPERATIONS SHALL BE DRY AND STABLE.

2. MAXIMUM SLOPE OF STOCKPILE SHALL BE 2H:1V.

3. UPON COMPLETION OF SOIL STOCKPILING, EACH PILE SHALL BE SURROUNDED WITH EITHER SILT FENCING OR HAYBALES, THEN STABILIZED WITH VEGETATION OR COVERED.

SOIL STOCKPILE DETAIL
NO SCALE

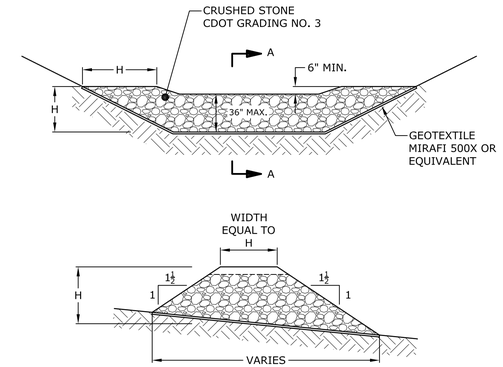

SECTION A-A

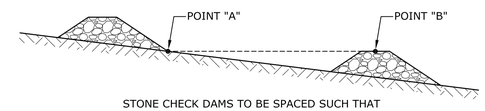

STONE CHECK DAMS TO BE SPACED SUCH THAT POINTS A AND B ARE AT THE SAME ELEVATION

STONE CHECK DAM SPACING

STONE CHECK DAM
NO SCALE

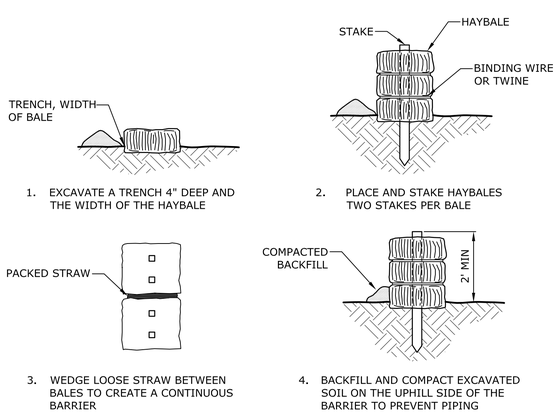

1. EXCAVATE A TRENCH 4" DEEP AND THE WIDTH OF THE HAYBALE

2. PLACE AND STAKE HAYBALES TWO STAKES PER BALE

3. WEDGE LOOSE STRAW BETWEEN BALES TO CREATE A CONTINUOUS BARRIER

4. BACKFILL AND COMPACT EXCAVATED SOIL ON THE UPHILL SIDE OF THE BARRIER TO PREVENT PIPING

PLACEMENT AND CONSTRUCTION OF HAYBALE BARRIER
NO SCALE

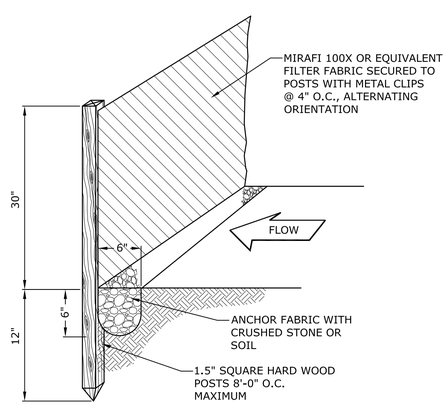

SILT FENCE
NO SCALE

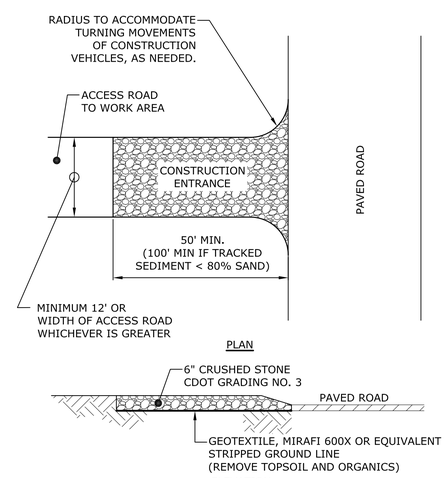

CONSTRUCTION ENTRANCE
NO SCALE

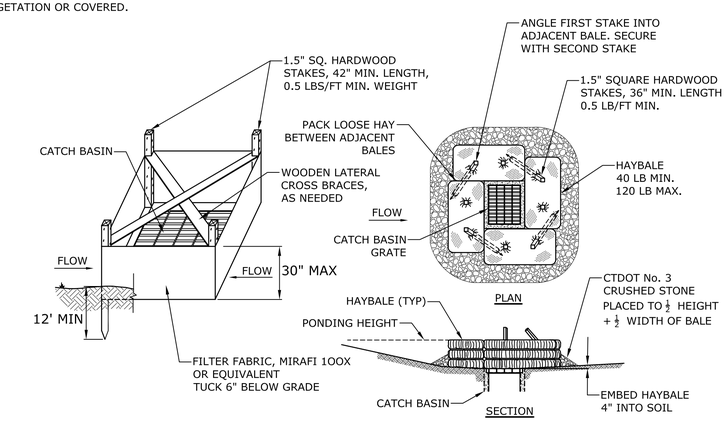

SILT FENCE INSTALLATION AT CATCH BASIN AT LOW POINTS

HAYBALE FILTER INSTALLATION AT CATCH BASIN AT LOW POINTS

CATCH BASIN EROSION CONTROL
NO SCALE

ADDENDUM NO. 3

REV.	DATE	REVISION DESCRIPTION	SHEET NO.
1	3/18/14	REVISED NOTES AND DETAIL	11.13.A3

THE INFORMATION, INCLUDING ESTIMATED QUANTITIES OF WORK, SHOWN ON THESE SHEETS IS BASED ON LIMITED INVESTIGATIONS BY THE STATE AND IS IN NO WAY WARRANTED TO INDICATE THE CONDITIONS OF ACTUAL QUANTITIES OF WORK WHICH WILL BE REQUIRED.

Plotted Date: Apr 01, 2014-1:53pm

DESIGNER/DRAFTER: MDS
CHECKED BY: JAR
AS NOTED

STATE OF CONNECTICUT
DEPARTMENT OF TRANSPORTATION

FILENAME: SE-A0992-01.dwg

SIGNATURE/BLOCK:
Tighe&Bond
1000 BRIDGEPORT AVE
SUITE 320
SHELTON, CT 06484
APPROVED BY: J. BLOCK
DATE: 11/20/2013

PROJECT TITLE:
REHABILITATION OF METRO-NORTH RAILROAD BRIDGE NO. 03948R AND BRIDGE NO. 03955R

TOWN: GREENWICH

DRAWING TITLE: SEDIMENTATION AND EROSION CONTROL NOTES, NARRATIVE AND DETAILS

PROJECT NO. 301-092
DRAWING NO. C-11
SHEET NO. 11.13.A3

04/01/2014

Apr 01, 2014-1:53pm Plotted By: JAR
Tighe & Bond, Inc. \\SRV\Projects\A\A0992\Drawing\Addendum\Addendum 3\Sheets\SE-A0992-01.dwg