NORTH MEADOW & SOUTH MEADOW PUMP STATIONS TRASH RACK REPLACEMENT

DPW PROJECT #14-42

CITY OF HARTFORD, CONNECTICUT

JULY 2014

PREPARED FOR

CITY OF HARTFORD, CONNECTICUT
50 JENNINGS ROAD
HARTFORD, CT 06120

PREPARED BY

FUSS & O'NEILL
146 HARTFORD ROAD
MANCHESTER, CONNECTICUT 06040
860.646.2469
www.fando.com

SHEET INDEX

SHEET No.	SHEET TITLE
GI-001	COVER SHEET
GI-101	GENERAL NOTES
CS-101	SITE PLAN
CD-501	SITE DETAILS
CD-502	SITE DETAILS
S-101	SOUTH MEADOW TRASH RACK DEMOLITION DETAILS
S-102	SOUTH MEADOW TRASH RACK PROPOSED WORK DETAILS
S-103	SOUTH MEADOW TRASH RACK DETAILS - ALT #1 STAINLESS STEEL
S-104	SOUTH MEADOW TRASH RACK DETAILS - ALT #2 GALVANIZED
S-105	NORTH MEADOW TRASH RACK DEMOLITION DETAILS
S-106	NORTH MEADOW TRASH RACK PROPOSED WORK DETAILS
S-107	NORTH MEADOW TRASH RACK DETAILS - ALT #3 STAINLESS STEEL
S-108	NORTH MEADOW TRASH RACK DETAILS - ALT #4 GALVANIZED
E-101	ELECTRICAL PLAN

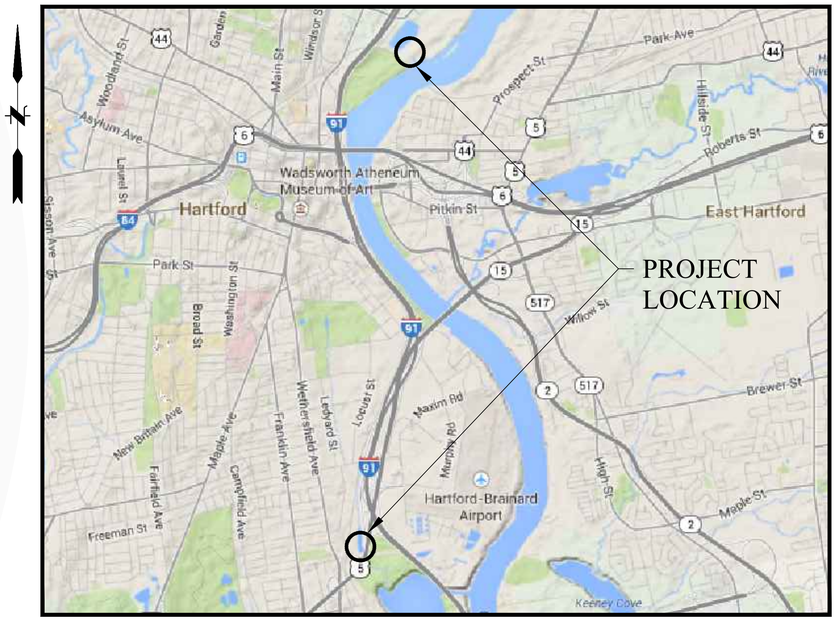

LOCATION MAP
SCALE: N.T.S.

PROJ. No.: 1997279.F54	
DATE: JULY 2014	
GI-001	

File Path: J:\DWG\P97\97279\F44\Structural\Plan\G-001.dwg, Layout: G-001, Plotted: Tuesday, June 10, 2014, User: kocconnor Plotter: DWG TO PDF.PC3 CTB File: FO 2008 MONO COVER.CTB

GENERAL NOTES:

1. THE WORK SHOWN ON THESE DRAWINGS HAS BEEN DESIGNED IN ACCORDANCE WITH THE STRUCTURAL REQUIREMENTS OF THE CONNECTICUT STATE BUILDING CODE CONSISTING OF THE 2003 INTERNATIONAL BUILDING CODE WITH THE 2005 CONNECTICUT SUPPLEMENT AND ITS AMENDMENTS.

2. THE STRUCTURAL COMPONENTS HAVE BEEN DESIGNED FOR THE FOLLOWING LOADS:

WIND:	BASIC WIND SPEED (3-SECOND GUST),	$V = 95$ MPH
	SURFACE ROUGHNESS CATEGORY	= C
	WIND IMPORTANCE FACTOR,	$I_w = 1.15$
	WIND EXPOSURE CATEGORY	= C
	INTERNAL PRESSURE COEFFICIENT,	$GC_{pi} = .85$

3. ALL STRUCTURAL WORK SHOWN OR SPECIFIED ON THESE DRAWINGS IS SUBJECT TO REVIEW BY THE STRUCTURAL ENGINEER OF RECORD. ASPECTS OF THE WORK FOUND NOT IN CONFORMANCE WITH THE STRUCTURAL DOCUMENTS SHALL BE CORRECTED AS DIRECTED BY THE ENGINEER.

4. DIMENSIONS OF EXISTING STRUCTURES SHOWN ON THESE PLANS HAVE BEEN TAKEN FROM THE ORIGINAL DESIGN DRAWINGS AND ASSUMED CORRECT, BUT ARE NOT GUARANTEED. THE CONTRACTOR SHALL VERIFY ALL EXISTING DIMENSIONS IN THE FIELD.

5. THE TERM 'BEYOND' USED IN SECTION VIEWS OF STRUCTURAL ELEMENTS INDICATES THAT SAID ELEMENT IS NOT IN THE LINE OF THE SECTION CUT; HOWEVER, IT PROVIDES A GREATER UNDERSTANDING OF THE STRUCTURE.

6. THE CONTRACTOR SHALL SUBMIT SHOP DRAWINGS OF REINFORCING STEEL AND STRUCTURAL STEEL FOR REVIEW BEFORE PROCEEDING WITH WORK. THE CONTRACTOR SHALL CHECK ALL DIMENSIONS AND ACCEPT FULL RESPONSIBILITY FOR DIMENSIONAL CORRECTNESS. SHOP DRAWINGS SHALL BEAR THE REVIEW AND APPROVAL STAMP OF THE CONTRACTOR, IN ACCORDANCE WITH THE GENERAL CONDITIONS.

7. STRUCTURAL PLANS SHALL NOT BE REPRODUCED IN WHOLE OR IN PART FOR USE AS SHOP DRAWINGS OR ERECTION PLANS. (THERE WILL BE NO RELAXATION OF THIS RESTRICTION FOR ANY TRADE).

ABBREVIATIONS:

ALUM.	ALUMINUM
CONC.	CONCRETE
CONT.	CONTINUOUS
GALV.	GALVANIZED
EXIST.	EXISTING
TYP.	TYPICAL
MAX.	MAXIMUM
MIN.	MINIMUM
SL.	SLOPE
S.S.	STAINLESS STEEL
STL.	STEEL
POST.	POST
VERT.	VERTICAL

CONCRETE NOTES:

1. ALL CONCRETE WORK SHALL CONFORM TO ACI 301 "SPECIFICATIONS FOR STRUCTURAL CONCRETE FOR BUILDINGS".

2. ALL REINFORCING STEEL SHALL CONFORM TO ASTM A615 GRADE 60 AND BE DETAILED IN ACCORDANCE WITH ACI 315 "MANUAL OF STANDARD PRACTICE FOR DETAILING REINFORCED CONCRETE STRUCTURES".

3. REBARS SHALL HAVE A MINIMUM CONCRETE COVER AS FOLLOWS:
   CONCRETE DEPOSITED AGAINST GROUND.....3 IN.
   CONCRETE EXPOSED TO WEATHER OR IN CONTACT WITH GROUND:
   FOR BARS #5 AND LARGER.....2 IN.
   FOR BARS SMALLER THAN #5.....1½ IN.
   CONCRETE NOT EXPOSED TO THE WEATHER OR THE GROUND:
   SLABS AND WALLS.....¾ IN.

4. ALL REINFORCING BARS SHALL BE CONTINUOUS AND LAPPED A MINIMUM OF 48 BAR DIAMETERS AT ALL SPLICES, CORNERS, AND INTERSECTIONS UNLESS NOTED OTHERWISE.

5. ALL REINFORCEMENT SHALL BE SECURELY TIED IN ITS PROPOSED LOCATION PRIOR TO AND DURING PLACEMENT OF CONCRETE USING APPROVED CHAIRS, SPACERS AND TIE WIRE AS REQUIRED. NO BARS SHALL BE CUT OR OMITTED IN THE FIELD WITHOUT THE APPROVAL OF THE ENGINEER.

6. WELDED WIRE FABRIC SHALL CONFORM TO ASTM A 185, WITH A MINIMUM YIELD STRENGTH OF 75 KSI. LAP EDGES AND ENDS OF FABRIC SHEETS A MINIMUM OF ONE MESH SPACING PLUS 2 INCHES, AND WIRE TOGETHER. ALTERNATIVELY, SLABS-ON-GRADE MAY BE REINFORCED WITH FIBER REINFORCEMENT, SUCH AS FIBERMESH, APPLIED AT A DOSAGE RATE OF NO LESS THAN 1.5 LBS/CU YD.

7. CONCRETE PROTECTION FOR REINFORCEMENT SHALL IN ALL CASES BE AT LEAST EQUAL TO THE DIAMETER OF THE BAR EXCEPT FOR CONCRETE SLABS.

8. ALL CONCRETE SHALL BE NORMAL WEIGHT CONCRETE AND SHALL DEVELOP A COMPRESSIVE STRENGTH OF 4,500 PSI IN 28 DAYS. CONCRETE SHALL HAVE A MAXIMUM AGGREGATE SIZE OF ¾ INCH, A MINIMUM CEMENT CONTENT OF 560 LBS/CU YD., AND A MAXIMUM SLUMP OF 4 INCHES.

9. ALL FOOTINGS AND PIERS SHALL BE CENTERED BELOW THE MEMBERS WHICH THEY SUPPORT UNLESS SHOWN OTHERWISE.

10. ALL EXPOSED EDGES OF CONCRETE SHALL HAVE A ¾ INCH CHAMFER UNLESS NOTED OTHERWISE.

11. ALL CONCRETE EXPOSED TO THE WEATHER SHALL BE AIR-ENTRAINED.

12. SIZES AND LOCATIONS OF ALL REQUIRED EMBEDDED ITEMS FOR ALL TRADES SUCH AS ANCHOR BOLTS, PIPING SLEEVES, HOLDOWN ANCHORS, ETC., SHALL BE COORDINATED BY THE CONTRACTOR WITH OTHER TRADES.

13. CONSTRUCTION JOINTS SHALL BE DETAILED AND LOCATED ON SHOP DRAWINGS AND APPROVED BY THE ENGINEER. UNLESS SHOWN OTHERWISE, CONSTRUCTION JOINTS ARE TO BE KEYED AND PROVIDE FOR CONTINUITY OF REINFORCING STEEL. CONSTRUCTION JOINTS ARE TO BE LOCATED WHERE CONSTRUCTION OPERATIONS ARE SUSPENDED FOR 30 MINUTES OR MORE.

14. CONSTRUCTION JOINTS IN WALLS SHALL BE LOCATED AT THE CONVENIENCE OF THE CONTRACTOR MID-WAY BETWEEN BUTTRESSES, BUT NOT LESS THAN 4'-0" FROM ANY OPENING, EXCEPT WHERE SPECIFICALLY SHOWN ON PLAN OR APPROVED BY THE ENGINEER. IN NO EVENT SHALL A STRAIGHT RUN LONGER THAN 80'-0" BE PLACED WITHOUT A JOINT.

15. NO HORIZONTAL CONSTRUCTION JOINTS ARE PERMITTED IN WALLS, OTHER THAN SHOWN IN DETAILS.

16. THE CONTRACTOR SHALL BE RESPONSIBLE FOR LIMITING POURS TO MINIMIZE SHRINKAGE CRACKING. IN GENERAL, WALLS SHALL NOT BE POURED IN CONTINUOUS LENGTHS EXCEEDING 30 FEET WITHOUT CONTRACTION (CONTROL) JOINTS. THE LOCATION AND CONFIGURATION OF JOINTS EXPOSED TO VIEW SHALL BE COORDINATED WITH THE ARCHITECT. CONTRACTION JOINTS IN SLAB-ON-GRADE SHOULD NOT EXCEED 20 FEET IN ANY DIRECTION. TYPICAL CONTRACTION JOINT PATTERNS ARE INDICATED ON FOUNDATION PLANS.

17. IF SHALLOW FOUNDATION WALLS, EXTENDED PLATFORMS, ETC. ARE POURED SEPARATELY FROM THE MAIN FOUNDATION WALLS, PROVIDE 2½ INCH DEEP KEY (FULL AREA) AND DOWEL ALL REINFORCEMENT.

CONSTRUCTION LAYOUT

1. PROVIDE PROPER TRANSITIONS BETWEEN EXISTING AND PROPOSED SITE IMPROVEMENTS. FIELD VERIFY EXISTING PAVEMENT AND GROUND ELEVATIONS AT THE INTERFACE WITH PROPOSED PAVEMENTS AND DRAINAGE STRUCTURES BEFORE START OF CONSTRUCTION.

2. PRIOR TO ORDERING MATERIALS AND BEGINNING CONSTRUCTION, FIELD VERIFY PROPOSED UTILITY ROUTES AND IDENTIFY ANY INTERFERENCES OR OBSTRUCTIONS WITH EXISTING UTILITIES OR PUBLIC RIGHTS-OF-WAY.

3. IMMEDIATELY INFORM THE ENGINEER IN WRITING IF EXISTING UTILITY CONDITIONS CONFLICT OR DIFFER FROM THAT INDICATED AND IF THE WORK CANNOT BE COMPLETED AS INDICATED.

4. DIMENSIONS ARE FROM FACE OF CURB, FACE OF BUILDING, FACE OF WALL, AND CENTER LINE OF PAVEMENT MARKINGS, UNLESS NOTED OTHERWISE.

5. BOUNDS OR MONUMENTATION DISTURBED DURING CONSTRUCTION SHALL BE SET OR RESET BY A PROFESSIONAL LICENSED SURVEYOR.

EARTHWORK

1. NOTIFY UTILITY LOCATOR SERVICE AT LEAST 72 HOURS BEFORE STARTING EXCAVATION. "CALL BEFORE YOU DIG", 1-800-922-4455.

2. STOP WORK IN THE VICINITY OF SUSPECTED CONTAMINATED SOIL, GROUNDWATER OR OTHER MEDIA. IMMEDIATELY NOTIFY THE OWNER SO THAT APPROPRIATE TESTING AND SUBSEQUENT ACTION CAN BE TAKEN. RESUME WORK IN THE IMMEDIATE VICINITY ONLY UPON DIRECTION BY THE OWNER OR ENGINEER.

UTILITIES

1. THE TYPE, SIZE AND LOCATION OF DEPICTED UNDERGROUND UTILITIES ARE APPROXIMATE REPRESENTATIONS OF INFORMATION OBTAINED FROM FIELD LOCATIONS OF VISIBLE FEATURES, EXISTING MAPS AND PLANS OF RECORD, UTILITY MAPPING, AND OTHER SOURCES OF INFORMATION OBTAINED BY THE ENGINEER. ASSUME NO GUARANTEE AS TO THE COMPLETENESS, SERVICEABILITY, EXISTENCE, OR ACCURACY OF UNDERGROUND FACILITIES. FIELD VERIFY THE EXACT LOCATIONS, SIZES, AND ELEVATIONS OF THE POINTS OF CONNECTIONS TO EXISTING UTILITIES.

2. PAY ALL FEES AND COSTS ASSOCIATED WITH UTILITY MODIFICATIONS AND CONNECTIONS, REGARDLESS OF THE ENTITY THAT PERFORMS THE WORK.

3. COORDINATE THE WORK AND WORK SCHEDULE WITH UTILITY COMPANIES. PROVIDE ADEQUATE NOTICE TO UTILITIES TO PREVENT DELAYS IN CONSTRUCTION.

SITE RESTORATION

1. PROVIDE 6 INCHES OF TOPSOIL AND SEED TO AREAS DISTURBED DURING CONSTRUCTION AND NOT DESIGNATED TO BE RESTORED WITH IMPERVIOUS SURFACES (BUILDINGS, PAVEMENTS, WALKS, ETC.) UNLESS OTHERWISE NOTED.

2. REPAIR DAMAGES RESULTING FROM CONSTRUCTION LOADS, AT NO ADDITIONAL COST TO OWNER.

3. RESTORE AREAS DISTURBED BY CONSTRUCTION OPERATIONS TO THEIR ORIGINAL CONDITION OR BETTER, AT NO ADDITIONAL COST TO OWNER.

DATUM CONVERSION

1. PROJECT DATUM IS NAD83/NAVD88.

2. HISTORIC DRAWINGS REFER TO OTHER DATUMS. THE FOLLOWING TABLE PROVIDES APPROXIMATE CONVERSION FACTORS BETWEEN THE VARIOUS DATUMS.

	SOUGHT DATUM		
GIVEN DATUM	NVGD29	NAVD88	HARTFORD CITY DATUM
NGVD29		-0.84	+2.08
NAVD88	+0.84		+2.92
HARTFORD CITY DATUM	-2.08	-2.92	

EXAMPLE: GIVEN AN ELEVATION OF +2.00' IN NGVD29; SUBTRACT 0.84' TO OBTAIN THE EQUIVALENT ELEVATION IN NAVD88.

No.	DATE	DESCRIPTION	DESIGNER	REVIEWER
1.	6/11/2014	FOR BIDDING	KVO	KAB

SEAL

SEAL

SCALE:
HORZ.:
VERT.:
DATUM:
HORZ.:
VERT.:
0
GRAPHIC SCALE

FUSS & O'NEILL
146 HARTFORD ROAD
MANCHESTER, CONNECTICUT 06040
860.646.2469
www.fando.com

CITY OF HARTFORD

GENERAL NOTES

NORTH MEADOW & SOUTH MEADOW PUMPING STATIONS
TRASH RACK REPLACEMENT

HARTFORD CONNECTICUT

PROJ. No.: 1997279.F54
DATE: JULY 2014

GI-101

File Path: J:\DWG\P97\97279\F44\Structural\Plan\G-001.dwg Layout: G101 Plotted: Tue, June 10, 2014 - 4:41 PM User: koconnor
Plotter: DWG TO PDF.PC3 CTB File: FO 2008 MONO COVER.CTB
LAYER STATE:
MS VIEW:

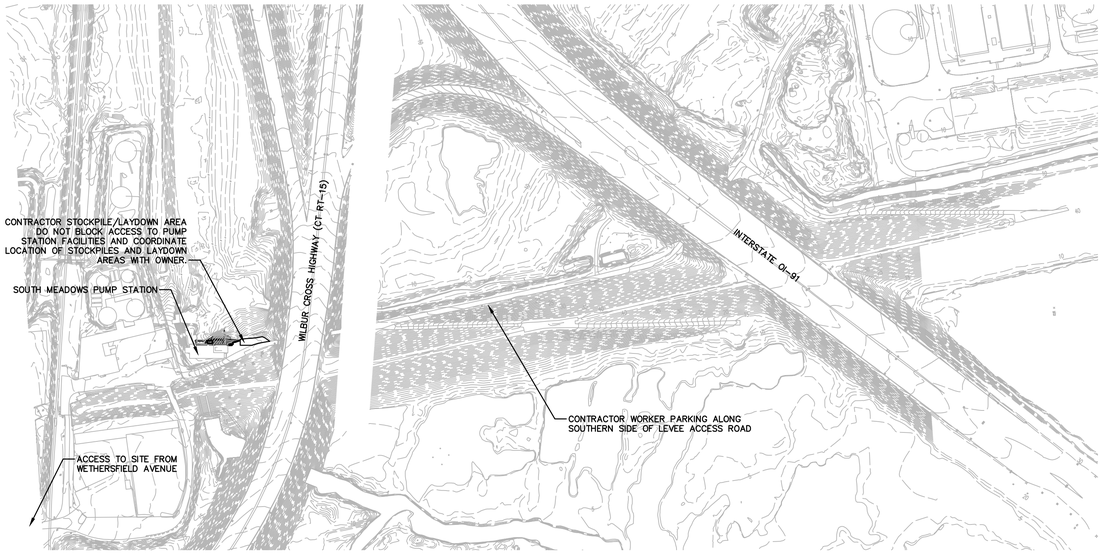

SOUTH MEADOWS PUMP STATION OVERALL SITE PLAN

SCALE: 1" = 200'

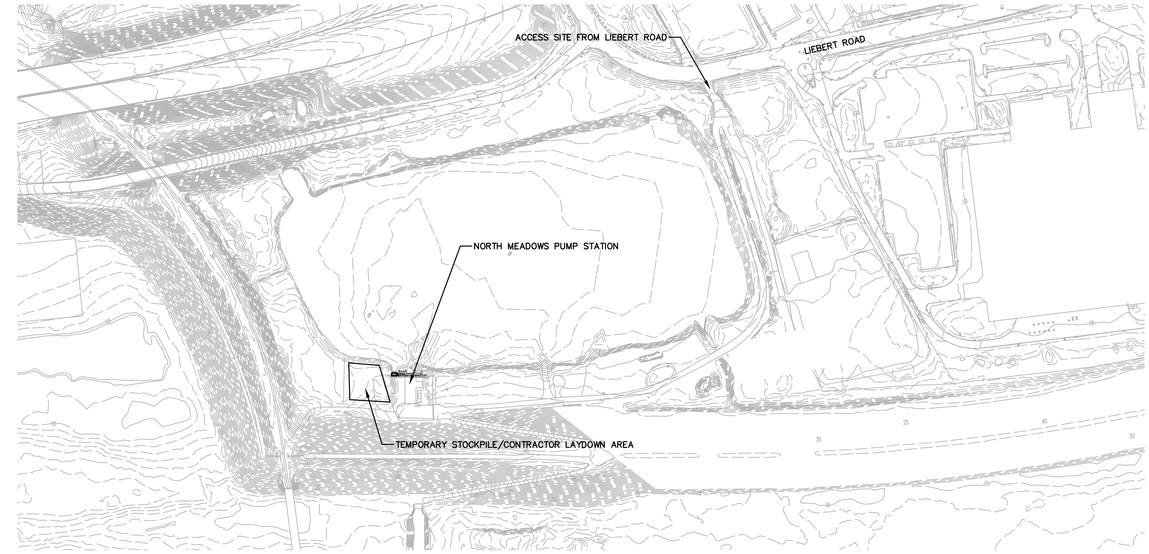

NORTH MEADOWS PUMP STATION OVERALL SITE PLAN

SCALE: 1" = 200'

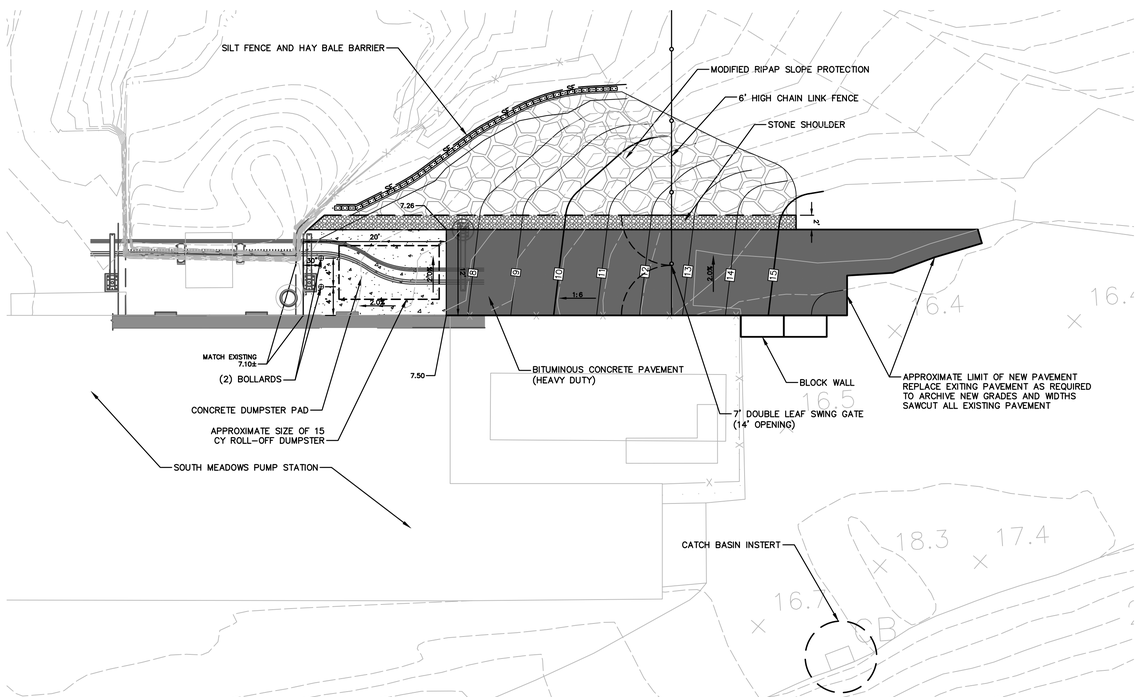

SOUTH MEADOWS PUMP STATION SITE PLAN

SCALE: 1" = 10'

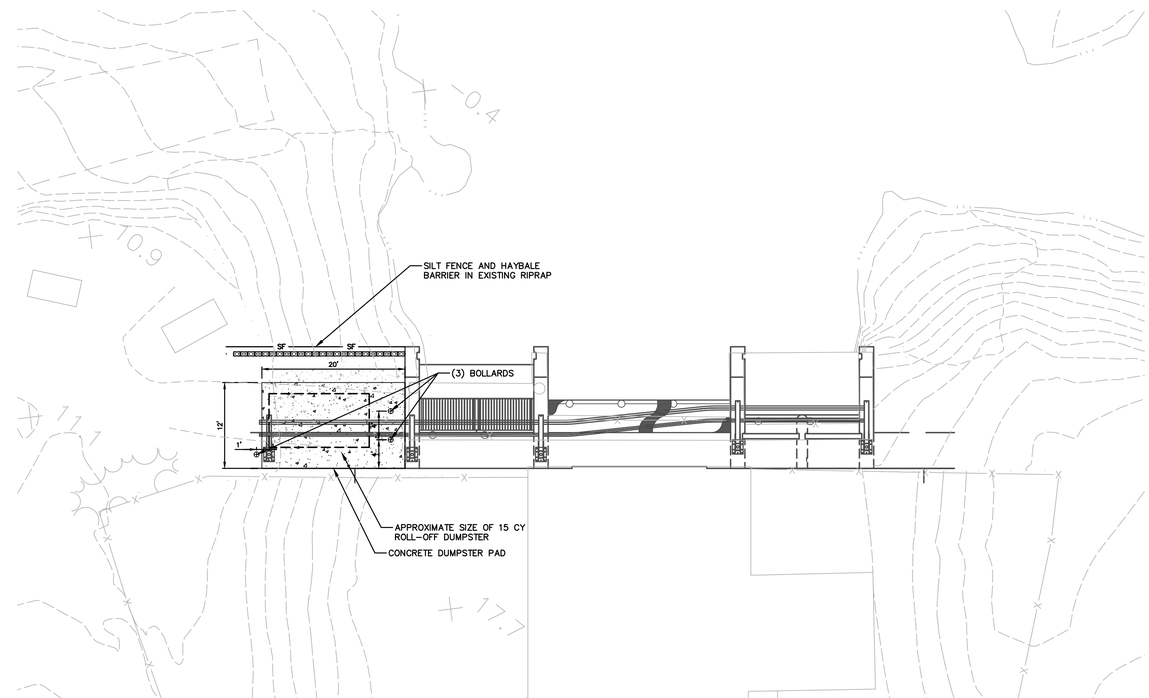

NORTH MEADOWS PUMP STATION SITE PLAN

SCALE: 1" = 10'

No.	DATE	DESCRIPTION	DESIGNER	REVIEWER
1.	6/11/2014	FOR BIDDING		

SEAL

SEAL

SCALE:
HORZ.: AS NOTED
VERT.:
DATUM:
HORZ.: NAD 83
VERT.: NAVD 88
0
GRAPHIC SCALE

FUSS & O'NEILL
146 HARTFORD ROAD
MANCHESTER, CONNECTICUT 06040
860.646.2469
www.fando.com

CITY OF HARTFORD

SITE PLAN

NORTH MEADOW & SOUTH MEADOW PUMP STATIONS
TRASH RACK REPLACEMENT

HARTFORD CONNECTICUT

PROJ. No.: 1997279.F54
DATE: JULY 2014

CS-101

File Path: J:\DWG\P97\97279\F44\Civil\Plan\1997027 9F44_STP01.dwg Layout: CS-101 Plotted: Tue, June 10, 2014 - 4:51 PM User: kcconnor
Plotter: DWG TO PDF.PC3 CTB File: FO.STB
LAYER STATE:
MS VIEW:

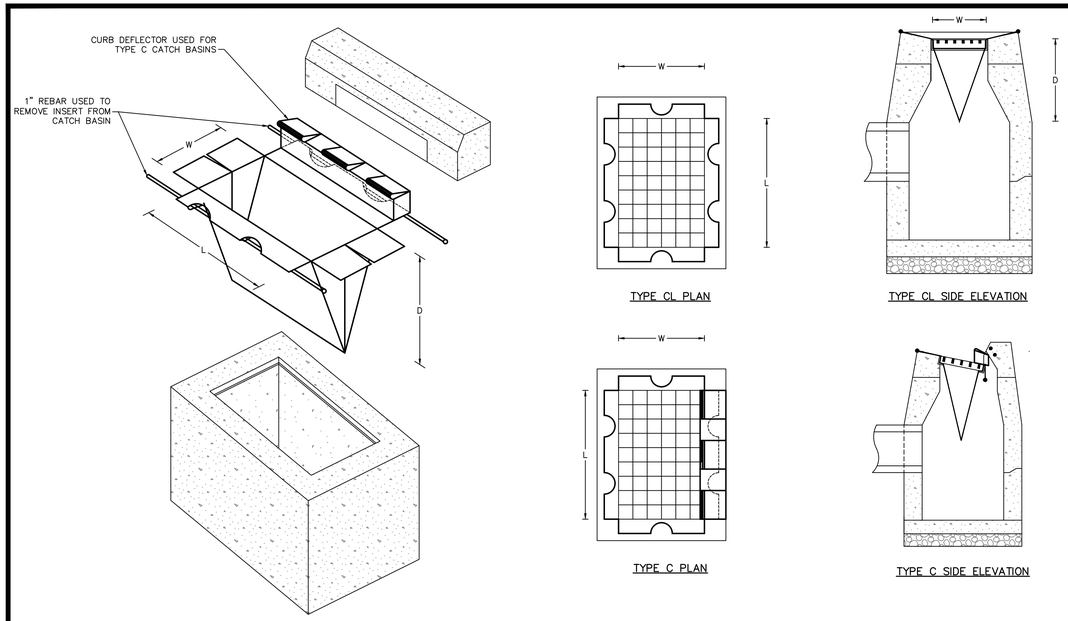

CATCH BASIN INSERT
NOT TO SCALE

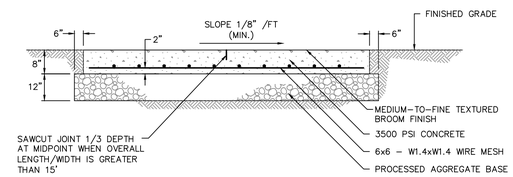

CONCRETE DUMPSTER PAD
NOT TO SCALE

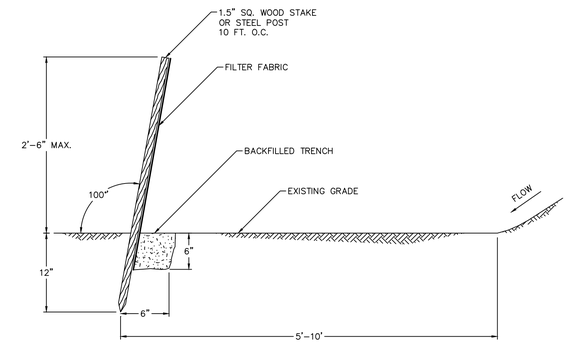

SILT FENCE
NOT TO SCALE

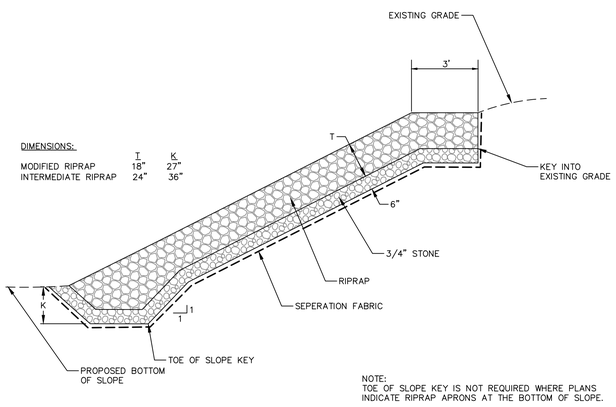

RIPRAP SLOPE PROTECTION
NOT TO SCALE

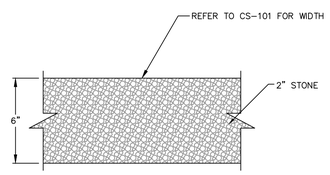

STONE SHOULDER
NOT TO SCALE

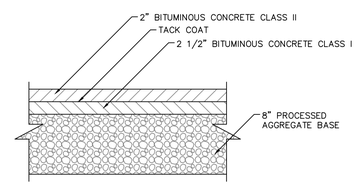

BITUMINOUS CONCRETE PAVEMENT (HEAVY DUTY)
NOT TO SCALE

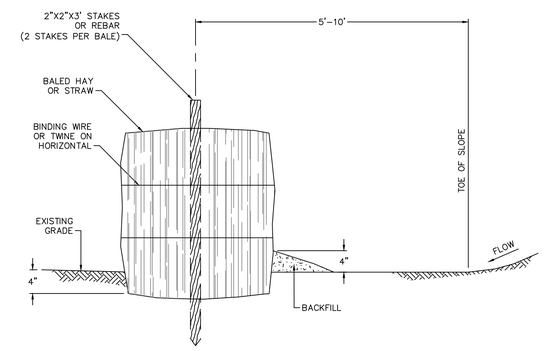

TOE OF SLOPE HAY BALE BARRIER
NOT TO SCALE

No.	DATE	DESCRIPTION	DESIGNER	REVIEWER
1.	6/11/2014	FOR BIDDING		

SEAL

SEAL

SCALE:
HORZ.:
VERT.:
DATUM:
HORZ.:
VERT.:
0
GRAPHIC SCALE

FUSS & O'NEILL
146 HARTFORD ROAD
MANCHESTER, CONNECTICUT 06040
860.646.2469
www.fando.com

CITY OF HARTFORD

SITE DETAILS

NORTH MEADOW & SOUTH MEADOW PUMP STATIONS
TRASH RACK REPLACEMENT

HARTFORD CONNECTICUT

PROJ. No.: 1997279.F54
DATE: JULY 2014

CD-501

File Path: C:\Temp\AcPublish_6020\1997\0279\F44_DET01.dwg, Layout: CD-501, Plotted: Tue, Jun 10, 2014 - 4:48 PM User: koconnor
Plotter: DWG TO PDF.PC3 CTB File: FO.STB
LAYER STATE:
MS VIEW:

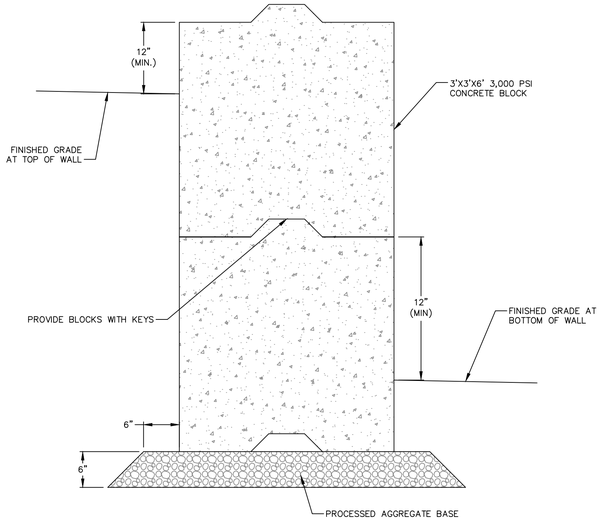

NOTE:
1. ADJUST NUMBER OF BLOCKS AS REQUIRED TO ACHIEVE REQUIRED GRADES.
2. ALTERNATE BLOCKS SO THAT JOINT BETWEEN TO BLOCKS IS ALIGNED WITH THE CENTER OF THE BLOCKS IN THE COURSE ABOVE AND BELOW THE BLOCK.
3. ALL BLOCKS SHALL BE IDENTICAL IN SIZE, COLOR, AND SHAPE. PROVIDE NEW BLOCKS ONLY.

*TO BE INSTALLED IN SOUTH MEADOW PUMP STATION ONLY

PERMANENT BLOCK WALL

NOT TO SCALE

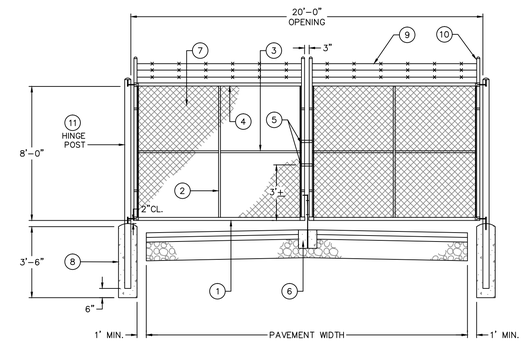

*TO BE INSTALLED IN SOUTH MEADOW PUMP STATION ONLY

CHAIN LINK DOUBLE LEAF SWING GATE LEGEND

1. 2" SQUARE FRAME WELDED TO FORM FOUR SIDES OF LEAF
2. 1 1/4" SQUARE UPRIGHT BRACING WELDED TO FRAME
3. 1 1/4" SQUARE HORIZONTAL BRACING WELDED TO FRAME
4. TENSION BAR ATTACHED TO FRAME ON ALL FOUR SIDES WITH HOOK BOLTS
5. PADLOCK AND LATCH DEVICE
6. 12" DIA. x 12" DEEP CONC. COLLAR WITH STEEL PIPE FOR SET PIN. COLLAR AND PIPE SET FLUSH WITH PAVEMENT. PIPE TO DRAIN INTO GRAVEL BASE.
7. 9 GAUGE 2" WIRE MESH BLACK VINYL COATED FABRIC.
8. HINGE POST FOOTING SHALL BE 3000 PSI CONCRETE. DIAMETER SHALL BE 4 TIMES POST WIDTH (MIN.)
9. 12.5 GAUGE GALVANIZED BARBED WIRE (TYP. OF 3) (APPLICABLE TO FENCES 6' AND OVER.
10. BLACK VINYL COATED 45° 3 WIRE BARB WIRE ARM (APPLICABLE TO FENCES 6' AND OVER.)
11. SEE GATE TABLE

GATE TABLE	
OPENING	HINGE POST
8'-0" – 12'-0"	2 1/2" SQUARE
14'-0" – 24'-0"	3" SQUARE
26'-0" – 36'-0"	6" SQUARE
38'-0" – 40'-0"	8" SQUARE

*TO BE INSTALLED IN SOUTH MEADOW PUMP STATION ONLY

PERMANENT CHAIN LINK DOUBLE LEAF SWING GATE

SCALE: N.T.S.

NOTES

1. FOOTING DESIGN TO BE CHECKED BY AN ENGINEER FOR WIND LOADS IF SLATS ARE USED OR IF POOR SOIL CONDITIONS EXIST.
2. STRAIGHT RUNS BETWEEN BRACED POSTS SHALL NOT EXCEED 500 FT.
3. FENCE DETAILS ARE INTENDED AS A GUIDE ONLY. ALL FENCE MATERIALS AND CONSTRUCTION METHODS SHALL BE APPROVED BY THE ENGINEER AND FENCE MANUFACTURER.

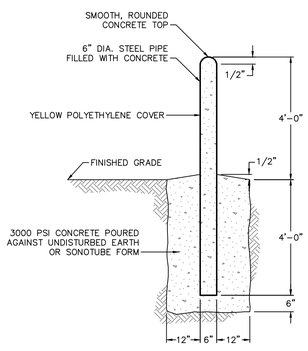

VEHICLE GUARD POST

NOT TO SCALE

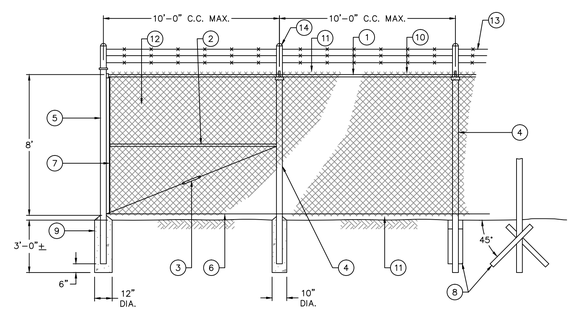

ELEVATION

*TO BE INSTALLED IN SOUTH MEADOW PUMP STATION ONLY

CHAIN LINK FENCE LEGEND

1. 1 5/8" O.D. TOP RAIL ATTACH FABRIC WITH 9 GUAGE WIRE CLIP EVERY 24"
2. 1 5/8" O.D. BRACE FOR RAIL FENCES OVER 6 FEET HIGH AND ALL FENCES WITHOUT TOP RAIL
3. 5/16" TRUSS ROD AND TURNBUCKLE
4. INTERMEDIATE POST

FENCE HEIGHT	SQUARE POST	ROUND POST
6 FEET AND LESS	1 7/8"	2"
OVER 6 FEET	2 1/4"	2 1/2"

ATTACH TO C.L. FABRIC WITH CLIPS EVERY 15"

5. END OR CORNER POST

FENCE HEIGHT	SQUARE POST	ROUND POST
6 FEET AND LESS	2"	2 1/2"
OVER 6 FEET	2 1/2"	3"

6. 6 GAUGE BOTTOM TENSION WIRE ATTACH TO FABRIC WITH HOG RING AT 24" C.C.
7. TENSION ROD ATTACHED TO END OR CORNER POST
8. 2 30" MIN. LENGTH DRIVE ANCHORS DRIVEN THROUGH FITTINGS AT 90° TO FENCE LINE INTO EARTH AT 45° (TO BE USED IN PLACE OF CONCRETE FOOTING. SEE FOOTING DESIGN NOTE NO. 1)
9. CONCRETE FOOTING 36" DEEP WITH 12" DIA. AT END POST AND 10" DIA. AT INTERMEDIATE POST. HOLE CORE IN UNDISTURBED OR COMPACTED SOIL. (SEE NOTE NO. 1)
10. 6 GAUGE TENSION WIRE WHEN TOP RAIL IS NOT USED.
11. FABRIC SELVAGE:
UNDER 6 FEET SHALL BE KNUCKLED TOP AND BOTTOM
6 FEET AND OVER SHALL BE KNUCKLED BOTTOM AND TWISTED ON THE TOP
RECREATIONAL FENCING, REGARDLESS OF HEIGHT, SHALL BE KNUCKLED TOP AND BOTTOM
12. 9 GAUGE 2" WIRE MESH FABRIC (COMMERCIAL) BLACK VINYL COATED.
13. 12.5 GAUGE GALVANIZED BARBED WIRE (TYP. OF 3) (APPLICABLE TO FENCES 6' AND OVER.
14. BLACK VINYL COATED 45° 3 WIRE BARB WIRE ARM (APPLICABLE TO FENCES 6' AND OVER.)

PERMANENT CHAIN LINK FENCE

SCALE: N.T.S.

No.	DATE	DESCRIPTION	DESIGNER	REVIEWER
1.	6/11/2014	FOR BIDDING		

SEAL

SEAL

SCALE:
HORZ.:
VERT.:
DATUM:
HORZ.:
VERT.:
0
GRAPHIC SCALE

FUSS & O'NEILL
146 HARTFORD ROAD
MANCHESTER, CONNECTICUT 06040
860.646.2469
www.fando.com

CITY OF HARTFORD

SITE DETAILS

NORTH MEADOW & SOUTH MEADOW PUMP STATIONS
TRASH RACK REPLACEMENT

HARTFORD CONNECTICUT

PROJ. No.: 1997279.F54
DATE: JULY 2014

CD-502

File Path: C:\Temp\AcPublish_6020\1997027 9F44_DET01.dwg, Layout: CD-502, Plotted: Tue, Jun 10, 2014 - 4:48 PM User: kocannor
Plotter: DWG TO PDF.PC3 CTB File: FO.STB
MS VIEW:
LAYER STATE:

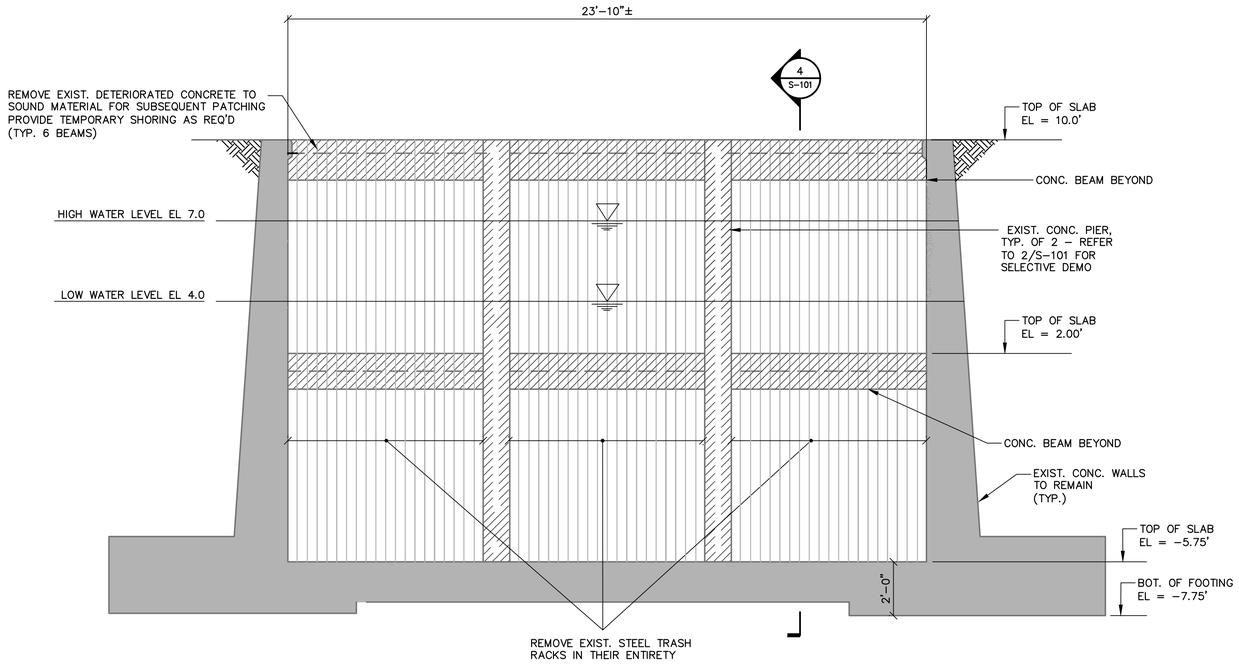

1 FOREBAY DEMOLITION
SCALE: 3/8" = 1'–0"

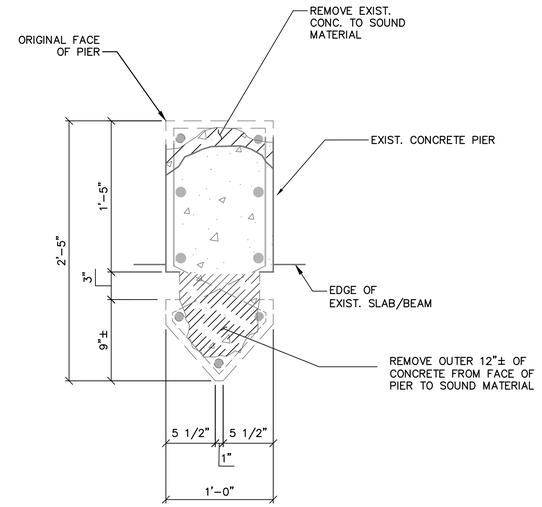

2 CONCRETE PIER SELECTIVE DEMOLITION DETAIL
SCALE: 1–1/2" = 1'–0"

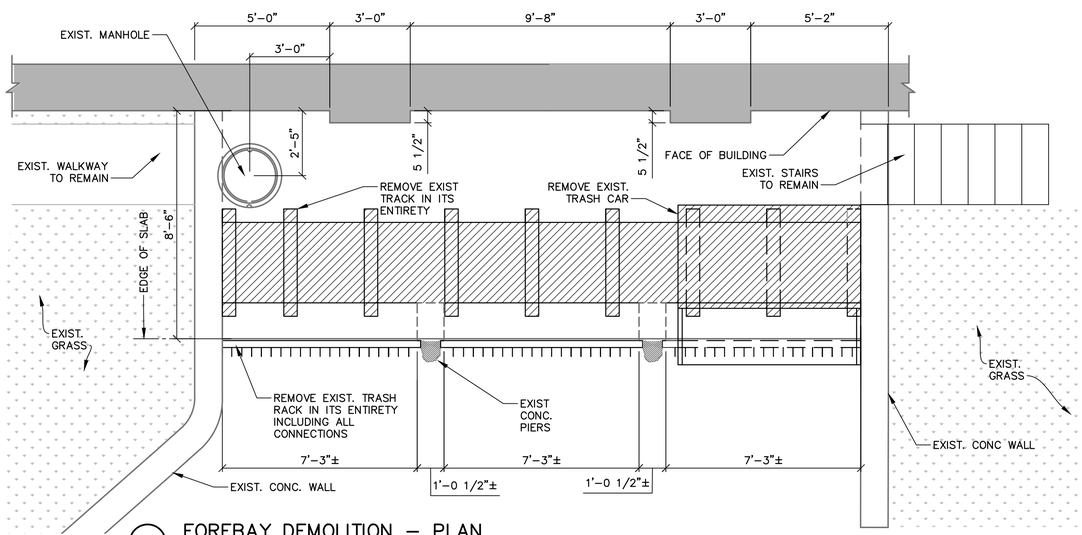

3 FOREBAY DEMOLITION – PLAN
SCALE: 3/8" = 1'–0"

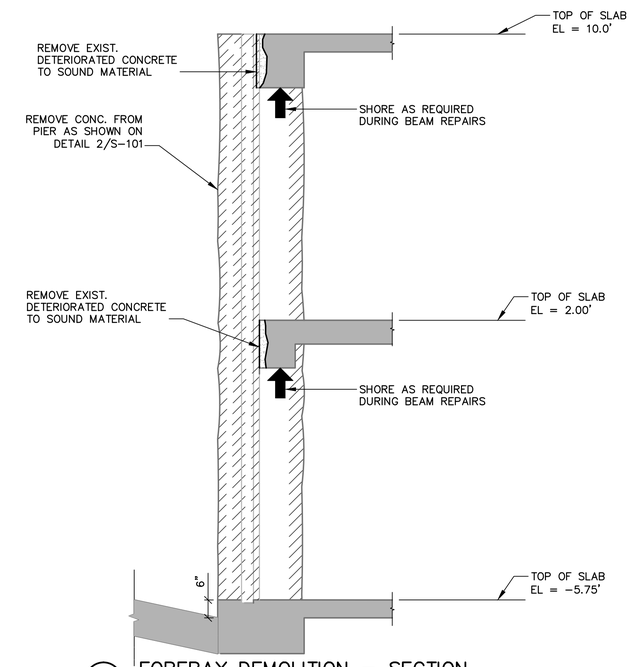

4 FOREBAY DEMOLITION – SECTION
SCALE: 1/2" = 1'

NOTE:
1. ELEVATIONS ON THIS DRAWING REFER TO CITY OF HARTFORD DATUM (HCD). SUBTRACT 2.92 TO ELEVATION PROVIDED TO CONVERT TO PROJECT DATUM (NAVD88).

No.	DATE	DESCRIPTION	DESIGNER	REVIEWER
1.	6/11/2014	FOR BIDDING	KVO	KAB

SEAL

SEAL

SCALE:
HORZ.: AS SHOWN
VERT.:
DATUM:
HORZ.:
VERT.: HCD
0
GRAPHIC SCALE

FUSS & O'NEILL
146 HARTFORD ROAD
MANCHESTER, CONNECTICUT 06040
860.646.2469
www.fando.com

CITY OF HARTFORD
SOUTH MEADOW
TRASH RACK DEMOLITION DETAILS
NORTH MEADOW & SOUTH MEADOW PUMP STATIONS
TRASH RACK REPLACEMENT
HARTFORD CONNECTICUT

PROJ. No.: 1997279.F54
DATE: JULY 2014

S-101

File Path: J:\DWG\P97\97279\F44\Structural\Plan\ST-201.dwg Layout: STR-01 Plotted: Wed, June 11, 2014 - 1:13 PM User: koconnor
Plotter: DWG TO PDF.PC3 CTB File: F&O STANDARD.CTB
LAYER STATE:
MS VIEW:

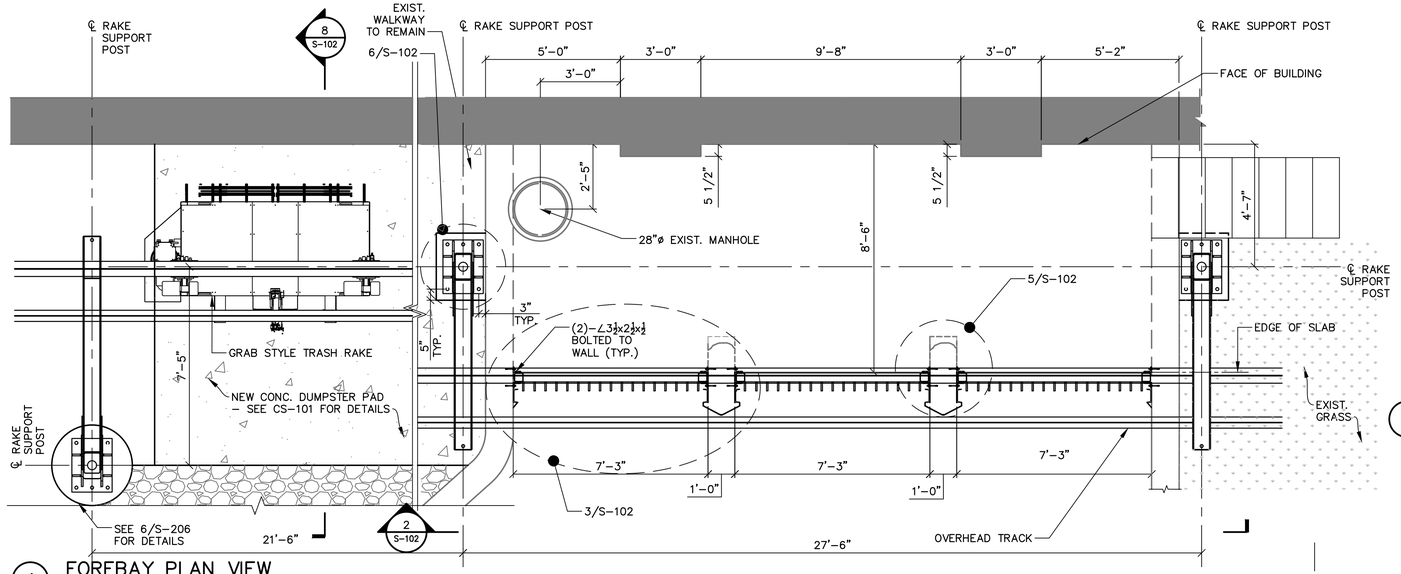

1 FOREBAY PLAN VIEW
SCALE: 3/8" = 1'-0"

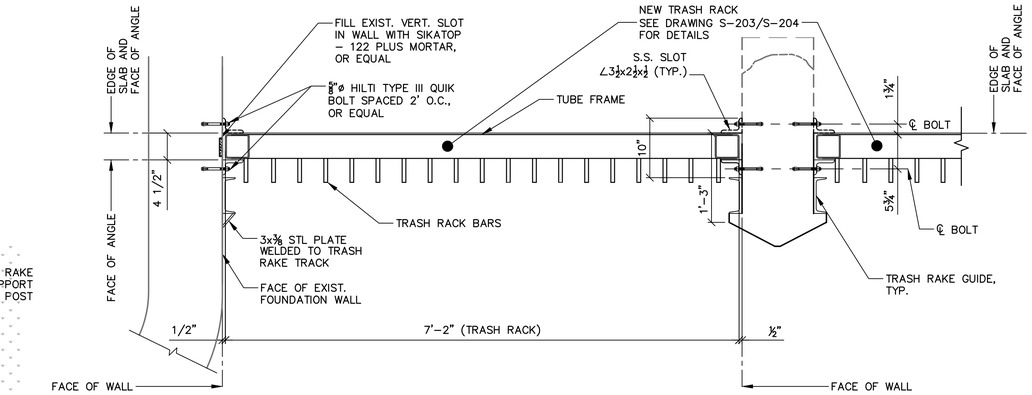

3 SECTION THROUGH TRASH RACK
SCALE: 1" = 1'-0"

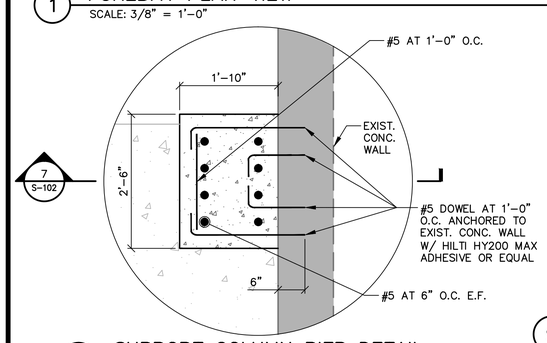

6 SUPPORT COLUMN PIER DETAIL
SCALE: 1-1/2" = 1'-0"

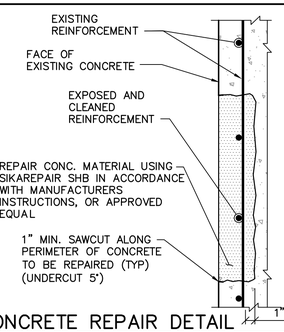

9 CONCRETE REPAIR DETAIL
SCALE: 1" = 1'-0"

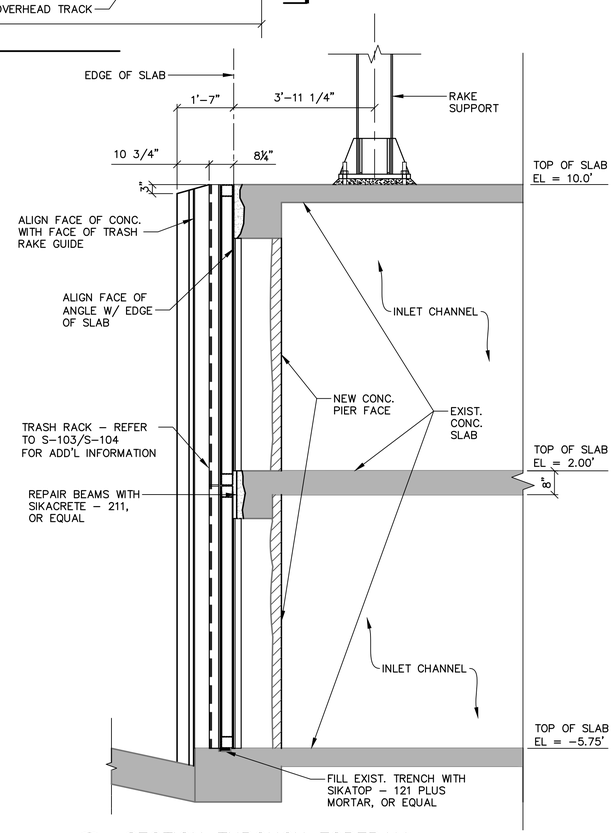

4 SECTION THROUGH FOREBAY
SCALE: 1/2" = 1'

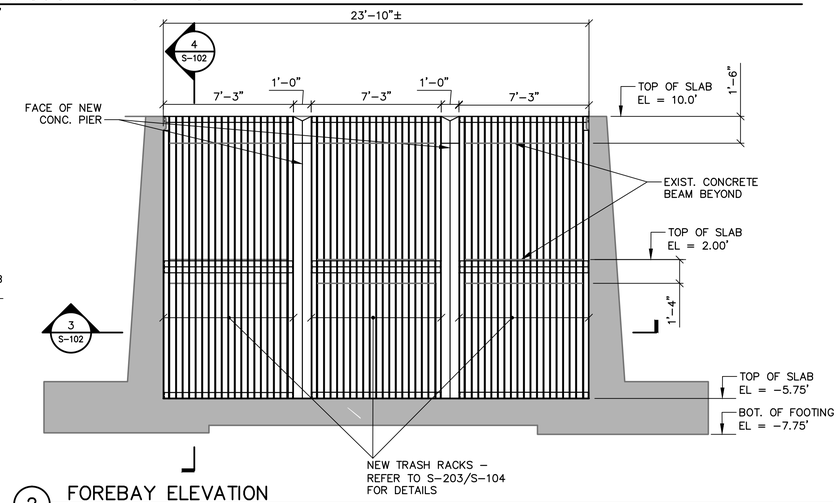

2 FOREBAY ELEVATION
SCALE: 3/8" = 1'-0"

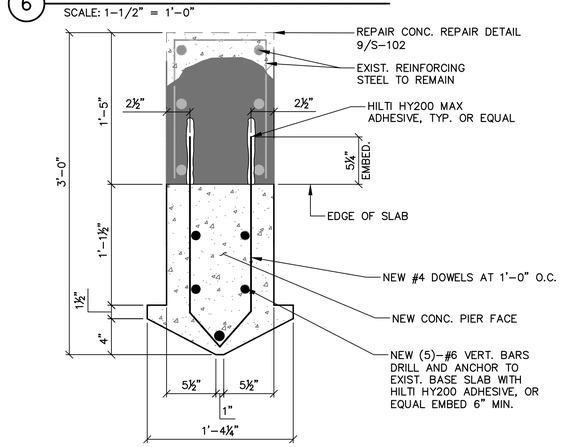

5 CONCRETE PIER REPAIR DETAIL
SCALE: 1-1/2" = 1'-0"

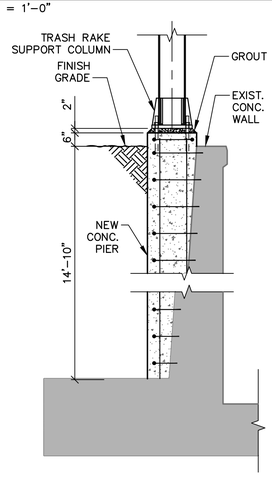

7 SUPPORT COLUMN PIER SECTION
SCALE: 3/8" = 1'-0"

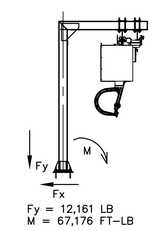

LOADING DIAGRAM

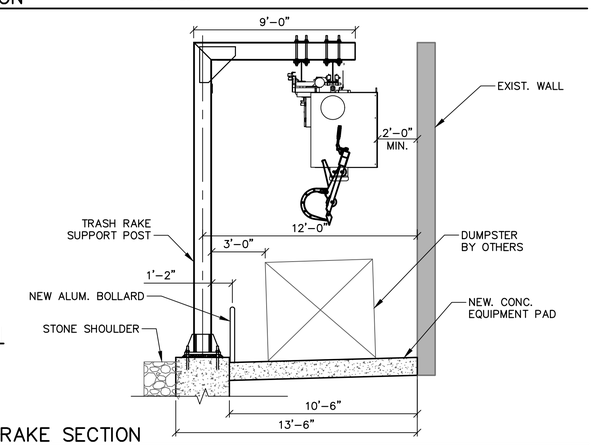

8 TRASH RAKE SECTION
SCALE: 1/4" = 1'-0"

No.	DATE	DESCRIPTION	DESIGNER	REVIEWER
1.	6/11/2014	FOR BIDDING	KVO	KAB

SEAL

SEAL

SCALE:
HORZ.: AS SHOWN
VERT.:
DATUM:
HORZ.:
VERT.: HCD
0
GRAPHIC SCALE

FUSS & O'NEILL
146 HARTFORD ROAD
MANCHESTER, CONNECTICUT 06040
860.646.2469
www.fando.com

CITY OF HARTFORD
SOUTH MEADOW
TRASH RACK PROPOSED WORK DETAILS
NORTH MEADOW & SOUTH MEADOW PUMP STATIONS
TRASH RACK REPLACEMENT
HARTFORD CONNECTICUT

PROJ. No.: 1997279.F54
DATE: JULY 2014

S-102

File Path: J:\DWG\P97\97279\F44\Structural\Plan\ST-201.dwg Layout: STR-02 Plotted: Wed, June 11, 2014 - 1:13 PM User: kocomor
Plotter: DWG TO PDF.PC3 CTB File: F&O STANDARD.CTB
LAYER STATE:
MS VIEW:

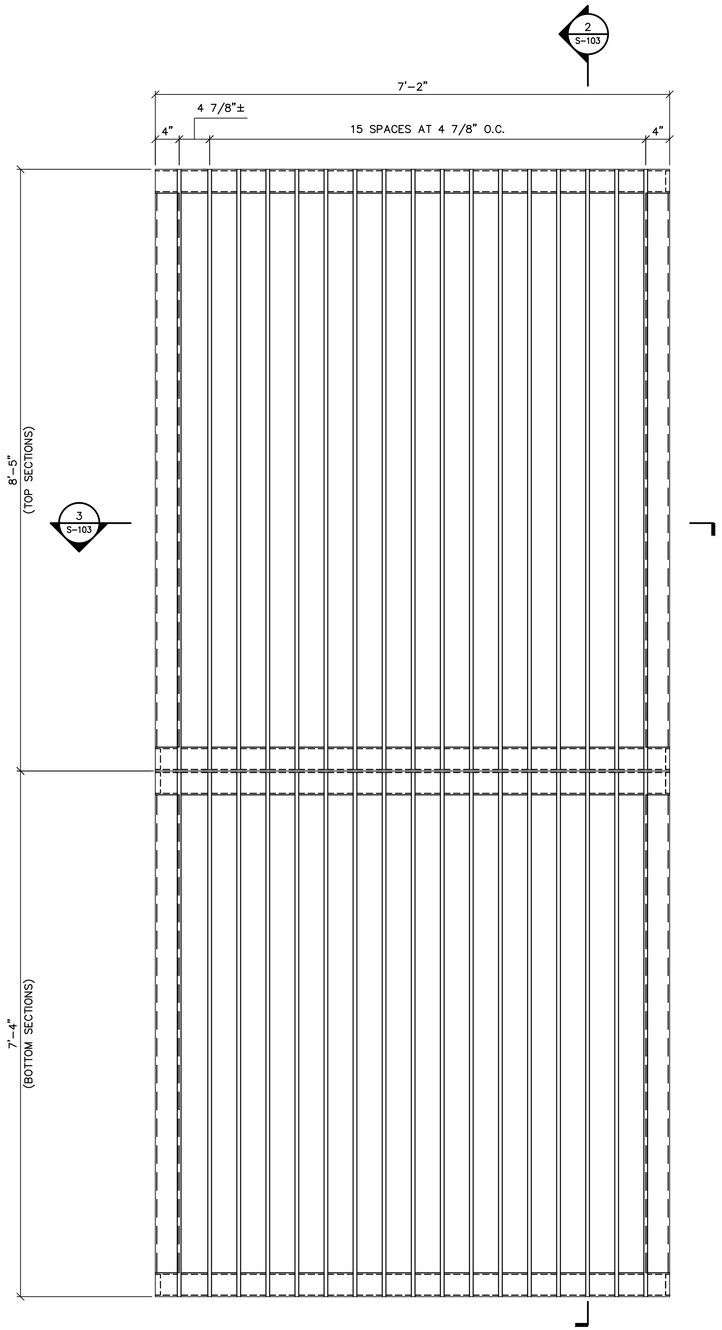

1 TRASH RACK ELEVATION (TYP. OF 3)
SCALE: 1" = 1'-0"

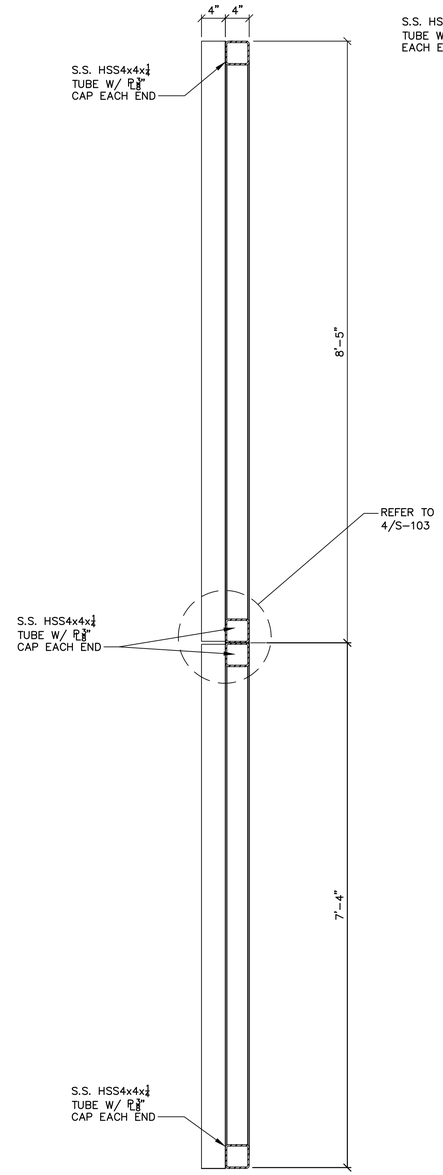

2 TRASH RACK CROSS SECTION
SCALE: 1" = 1'-0"

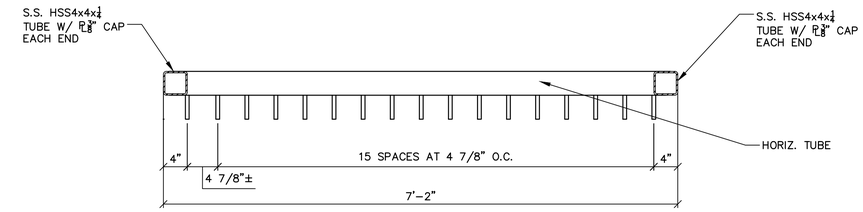

3 TRASH RACK PLAN VIEW
SCALE: 1" = 1'-0"

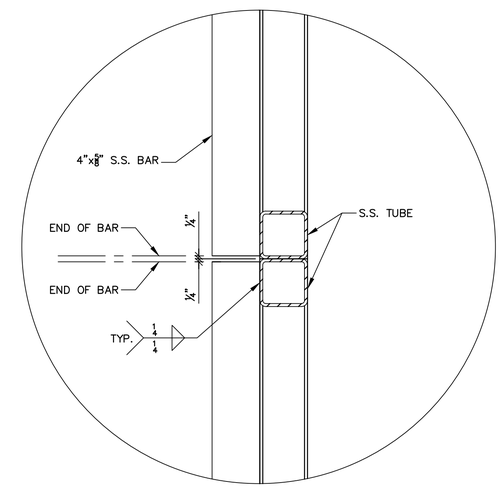

4 TRASH RACK CONNECTION DETAIL
SCALE: 2" = 1'-0"

No.	DATE	DESCRIPTION	DESIGNER	REVIEWER
1.	6/11/2014	FOR BIDDING	KVO	KAB

SEAL

SEAL

SCALE:
HORZ.: AS SHOWN
VERT.:
DATUM:
HORZ.:
VERT.: HCD
0
GRAPHIC SCALE

FUSS & O'NEILL
146 HARTFORD ROAD
MANCHESTER, CONNECTICUT 06040
860.646.2469
www.fando.com

CITY OF HARTFORD

SOUTH MEADOW TRASH RACK DETAILS
-ALT #1 STAINLESS STEEL FRAMING

NORTH MEADOW & SOUTH MEADOW PUMP STATIONS
TRASH RACK REPLACEMENT

HARTFORD CONNECTICUT

PROJ. No.: 1997279.F54
DATE: JULY 2014

S-103

File Path: J:\DWG\P97\97279\F44\Structural\Plan\ST-201.dwg Layout: STR-03 Plotted: Wed, June 11, 2014 - 1:13 PM User: kcconnor
Plotter: DWG TO PDF.PC3 CTB File: F&O STANDARD.CTB
LAYER STATE:
MS VIEW:

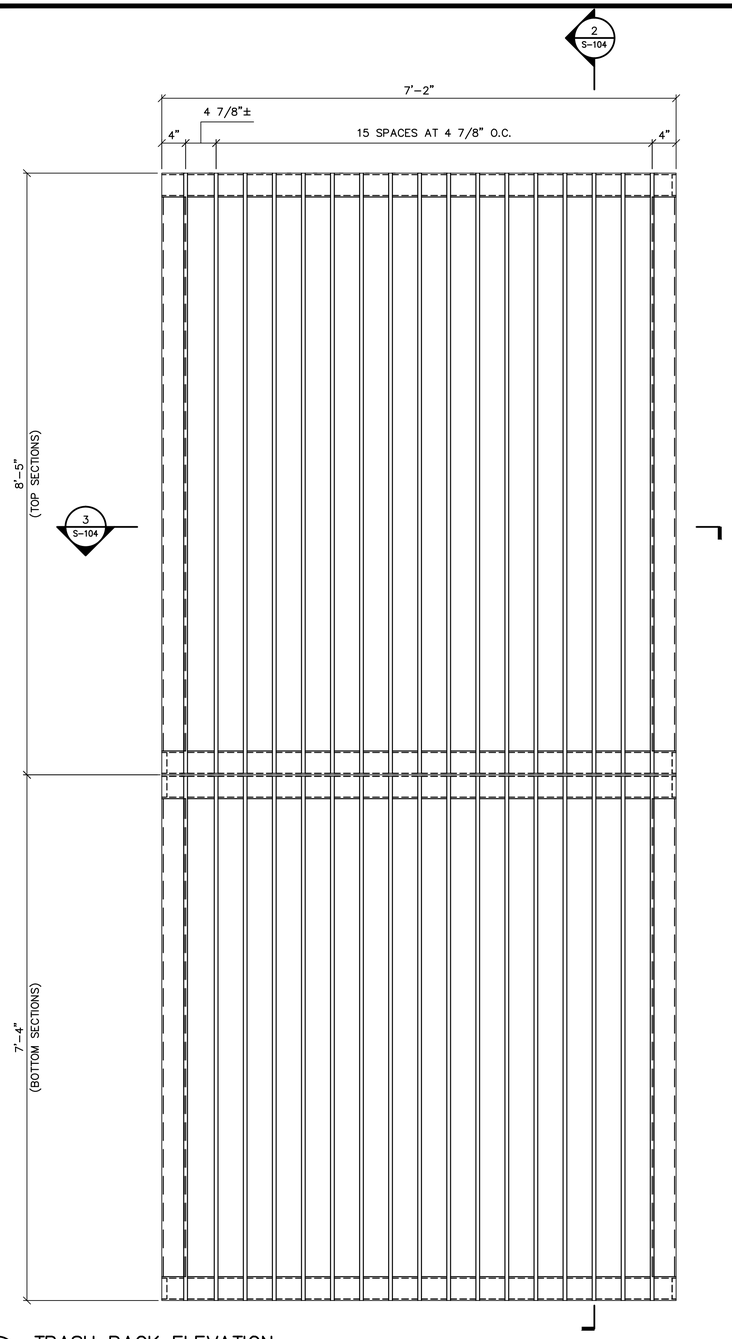

1 TRASH RACK ELEVATION
SCALE: 1" = 1'-0"

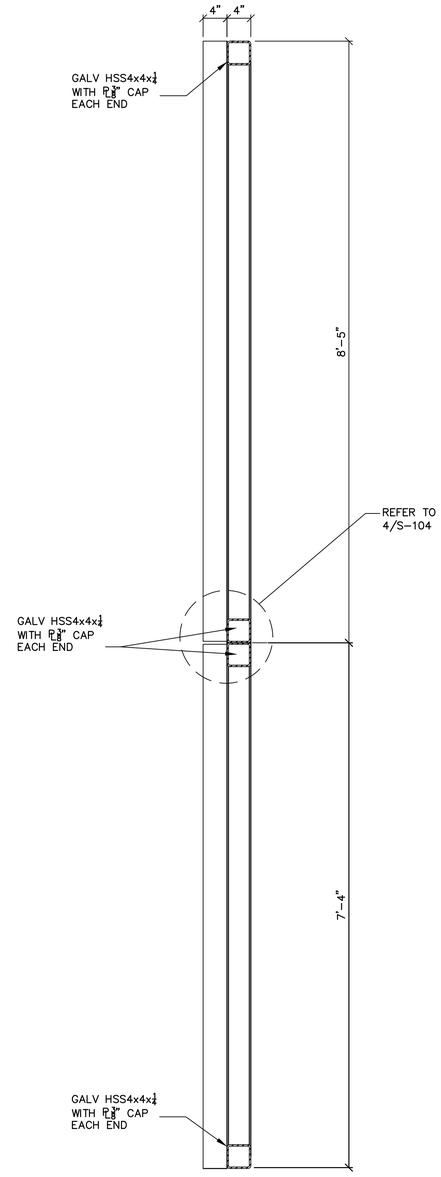

2 TRASH RACK CROSS SECTION
SCALE: 1" = 1'-0"

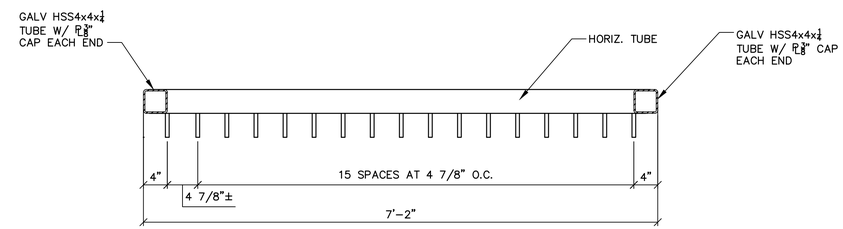

3 TRASH RACK PLAN VIEW
SCALE: 1" = 1'-0"

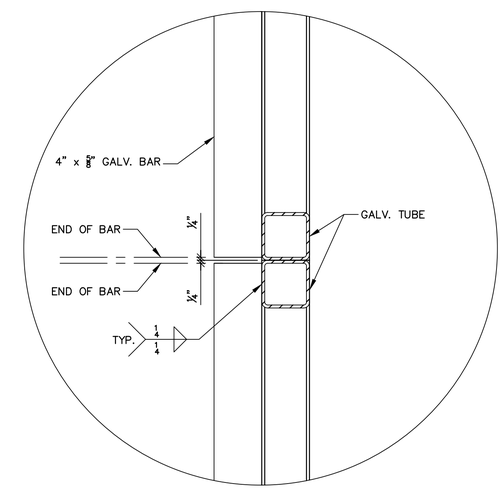

4 TRASH RACK CONNECTION DETAIL
SCALE: 2" = 1'-0"

File Path: J:\DWG\P97\97279\F44\Structural\Plan\ST-201.dwg Layout: STR-04 ALT Plotted: Wed, June 11, 2014 - 1:13 PM User: kocomnor
Plotter: DWG TO PDF.PC3 CTB File: F&O STANDARD.CTB
LAYER STATE:
MS VIEW:

No.	DATE	DESCRIPTION	DESIGNER	REVIEWER
1.	6/11/2014	FOR BIDDING	KVO	KAB

SEAL

SEAL

SCALE:
HORZ.: AS SHOWN
VERT.:
DATUM:
HORZ.:
VERT.: HCD
0
GRAPHIC SCALE

FUSS & O'NEILL
146 HARTFORD ROAD
MANCHESTER, CONNECTICUT 06040
860.646.2469
www.fando.com

CITY OF HARTFORD

SOUTH MEADOW TRASH RACK DETAILS
-ALT #2 GALVANIZED

NORTH MEADOW & SOUTH MEADOW PUMP STATIONS
TRASH RACK REPLACEMENT

HARTFORD CONNECTICUT

PROJ. No.: 1997279.F54
DATE: JULY 2014

S-104

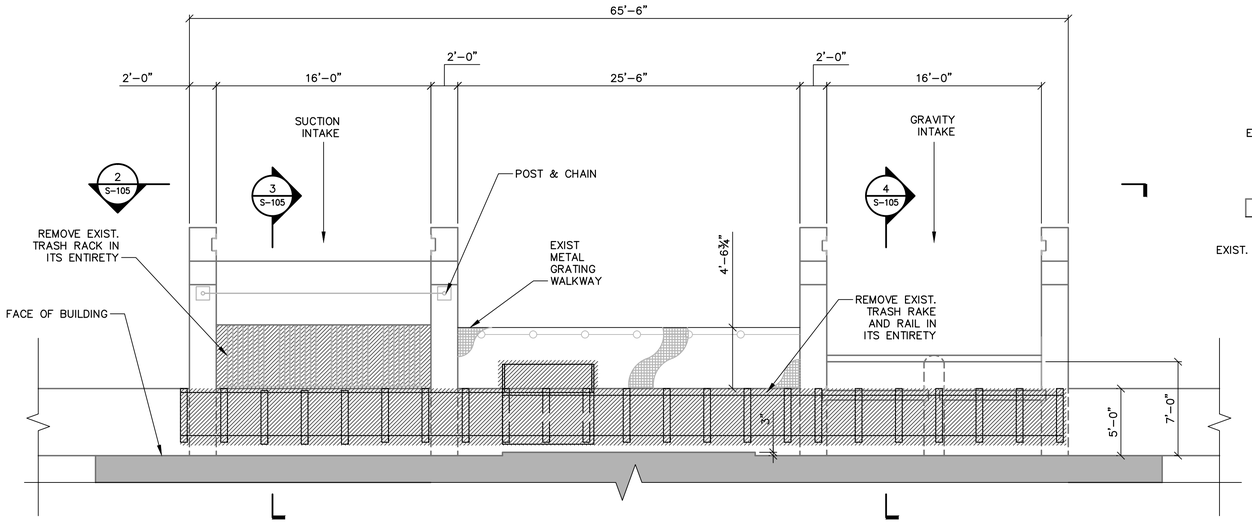

1 INTAKE BAY DEMOLITION– PLAN
SCALE: 3/16" = 1'-0"

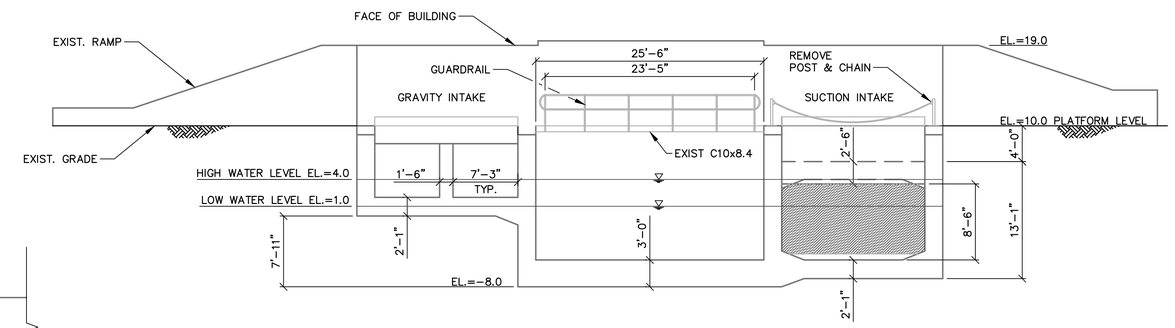

2 INTAKE BAY – DEMOLITION
SCALE: 3/8" = 1'-0"

NOTES:

- ALL ITEMS ARE EXISTING.
- TRASH RAKE AND RAIL NOT SHOWN FOR CLARITY

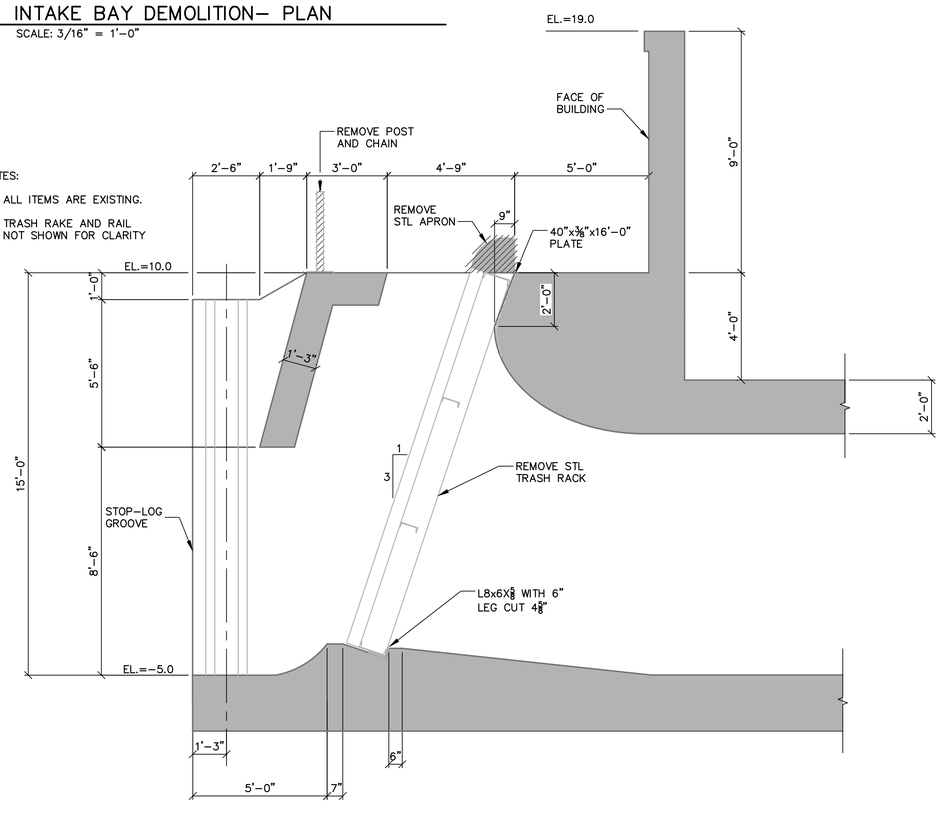

3 SUCTION INTAKE DEMOLITION – SECTION
SCALE: 3/8" = 1'-0"

NOTES:

- ALL ITEMS ARE EXISTING.
- TRASH RAKE AND RAIL NOT SHOWN FOR CLARITY

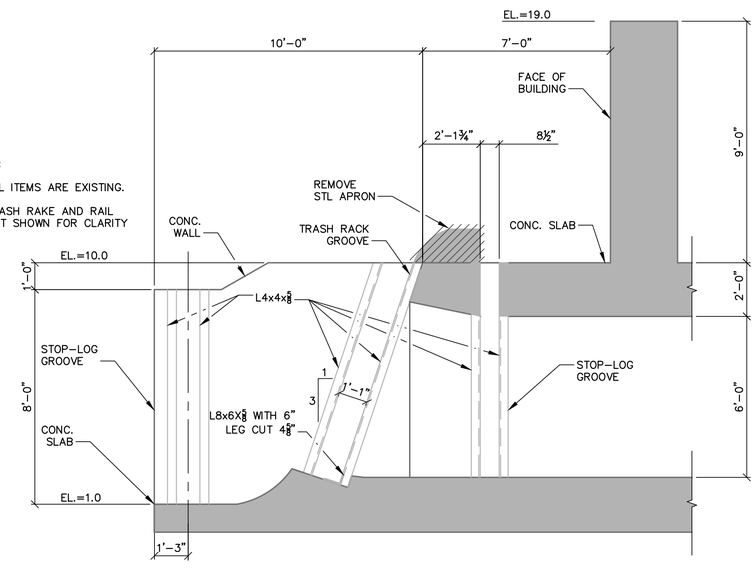

4 GRAVITY INTAKE DEMOLITION – SECTION
SCALE: 3/8" = 1'-0"

NOTE:
1. ELEVATIONS ON THIS DRAWING REFER TO NGVD29 DATUM. SUBTRACT 0.84 TO ELEVATION PROVIDED TO CONVERT TO PROJECT DATUM (NAVD88).

No.	DATE	DESCRIPTION	DESIGNER	REVIEWER
1.	6/11/2014	FOR BIDDING	KVO	KAB

SEAL

SEAL

SCALE:
HORZ.: AS SHOWN
VERT.:
DATUM:
HORZ.:
VERT.: NGVD 29
0
GRAPHIC SCALE

FUSS & O'NEILL
146 HARTFORD ROAD
MANCHESTER, CONNECTICUT 06040
860.646.2469
www.fando.com

CITY OF HARTFORD
NORTH MEADOW
TRASH RACK DEMOLITION DETAILS
NORTH MEADOW & SOUTH MEADOW PUMPING STATIONS
TRASH RACK REPLACEMENT
HARTFORD CONNECTICUT

PROJ. No.: 1997279.F54
DATE: JULY 2014

S-105

File Path: J:\DWG\P97\97279\F44\Structural\Plan\ST-301.dwg Layout: S-105 Plotted: Wed, June 11, 2014 - 1:19 PM User: kcconnor
Plotter: DWG TO PDF.PC3 CTB File: F&O STANDARD.CTB
LAYER STATE:
MS VIEW:

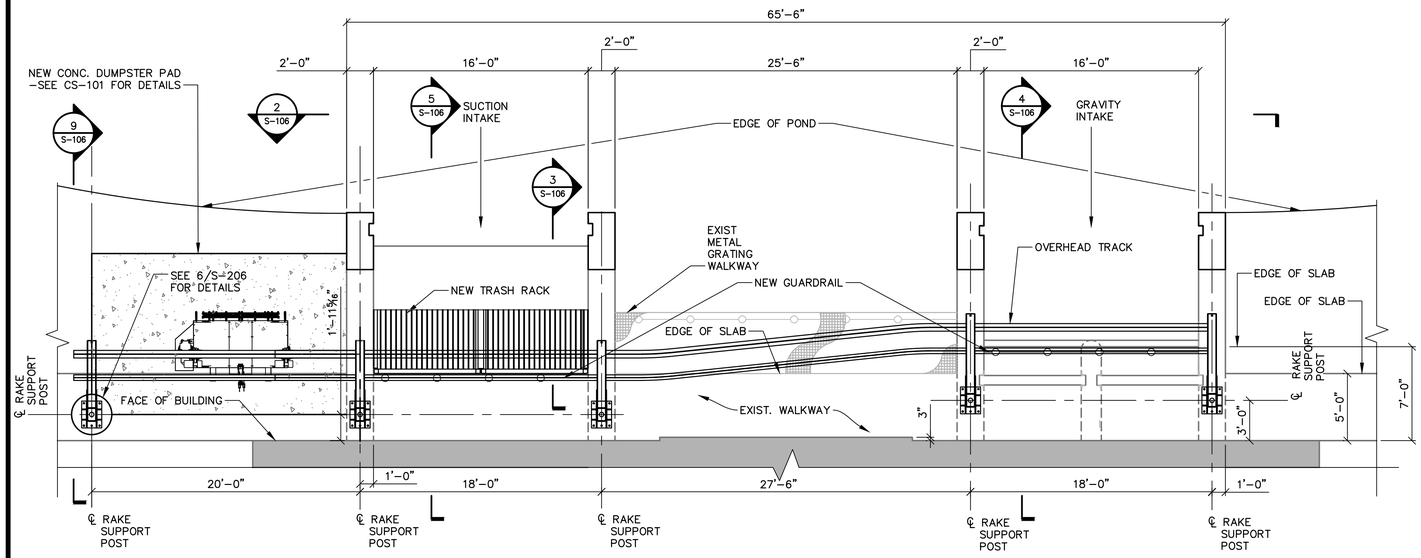

1 INTAKE BAY DEMOLITION – PLAN
SCALE: 3/16" = 1'-0"

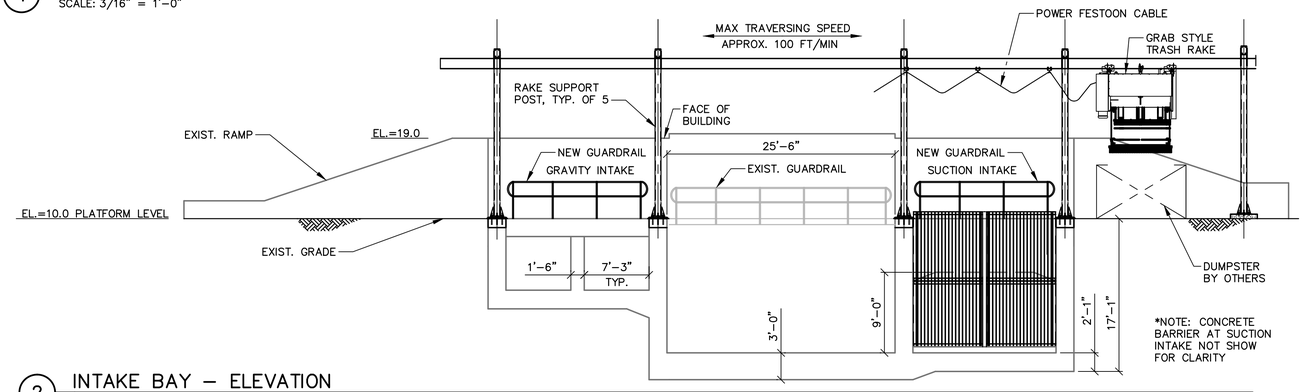

2 INTAKE BAY – ELEVATION
SCALE: 1/8" = 1'-0"

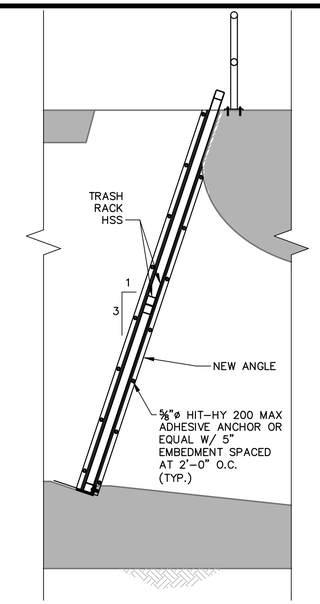

3 TRASH RAKE CONNECTION
SCALE: 3/8" = 1'-0"

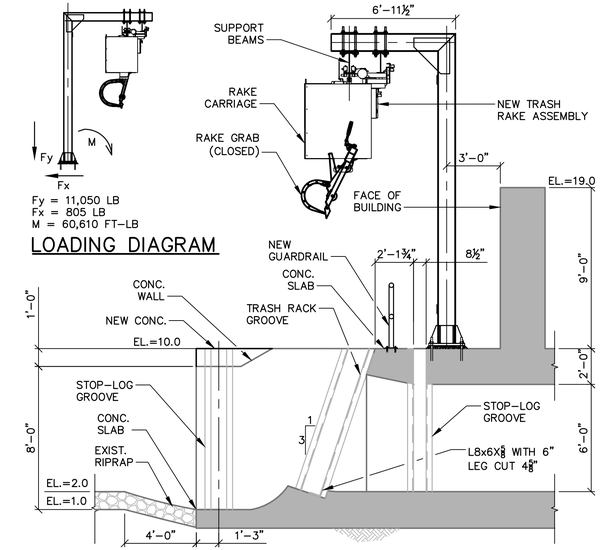

4 GRAVITY INTAKE – SECTION
SCALE: 1/4" = 1'-0"

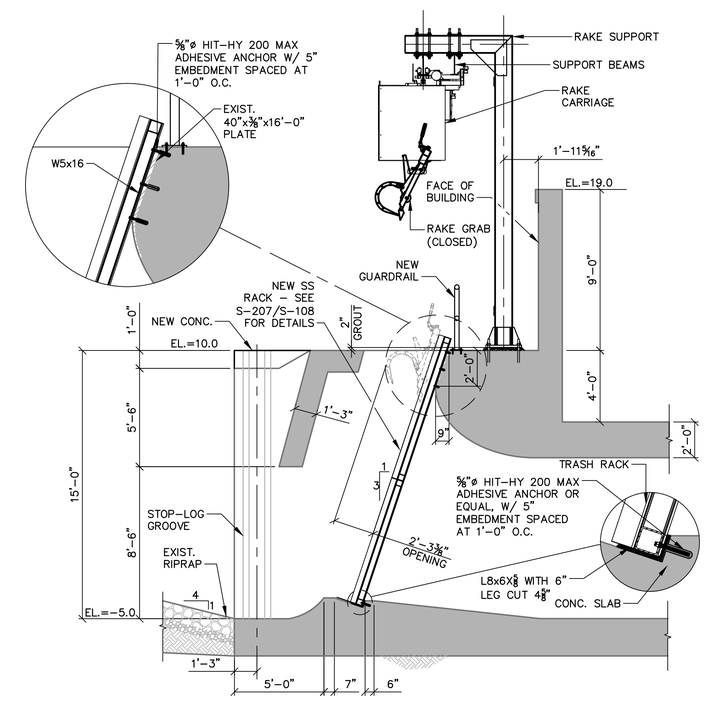

5 SUCTION INTAKE – SECTION
SCALE: 1/4" = 1'-0"

9 SECTION AT DUMPSTER
SCALE: 1/4" = 1'-0"

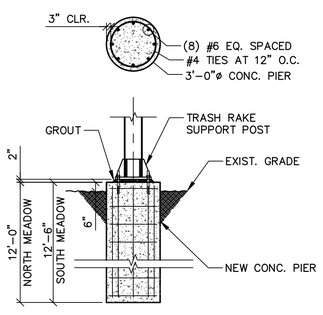

6 TRASH RAKE SUPPORT PIER DETAIL
SCALE: 1/4" = 1'-0"

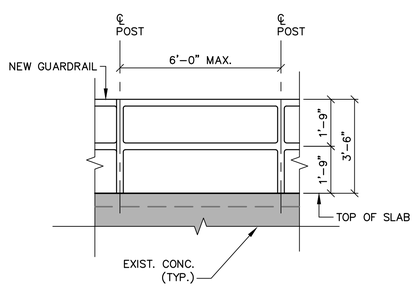

7 TYP. GUARDRAIL DETAIL
SCALE: 3/8" = 1'-0"

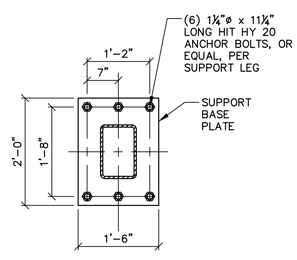

8 TYP. ANCHOR BOLT DETAIL
SCALE: N.T.S.

No.	DATE	DESCRIPTION	DESIGNER	REVIEWER
1.	6/11/2014	FOR BIDDING	KVO	KAB

SEAL

SEAL

SCALE:
HORZ.: AS SHOWN
VERT.:
DATUM:
HORZ.:
VERT.: NGVD 29
0
GRAPHIC SCALE

FUSS & O'NEILL
146 HARTFORD ROAD
MANCHESTER, CONNECTICUT 06040
860.646.2469
www.fando.com

CITY OF HARTFORD
NORTH MEADOW
TRASH RACK PROPOSED WORK DETAILS
NORTH MEADOW & SOUTH MEADOW PUMPING STATIONS
TRASH RACK REPLACEMENT
HARTFORD CONNECTICUT

PROJ. No.: 1997279.F54
DATE: JULY 2014

S-106

File Path: J:\DWG\P97\97279\F44\Structural\Plan\ST-301.dwg Layout: S-106 Plotted: Wed, June 11, 2014 - 1:19 PM User: koconnor
Plotter: DWG TO PDF.PC3 CTB File: F&O STANDARD.CTB
LAYER STATE:
MS VIEW:

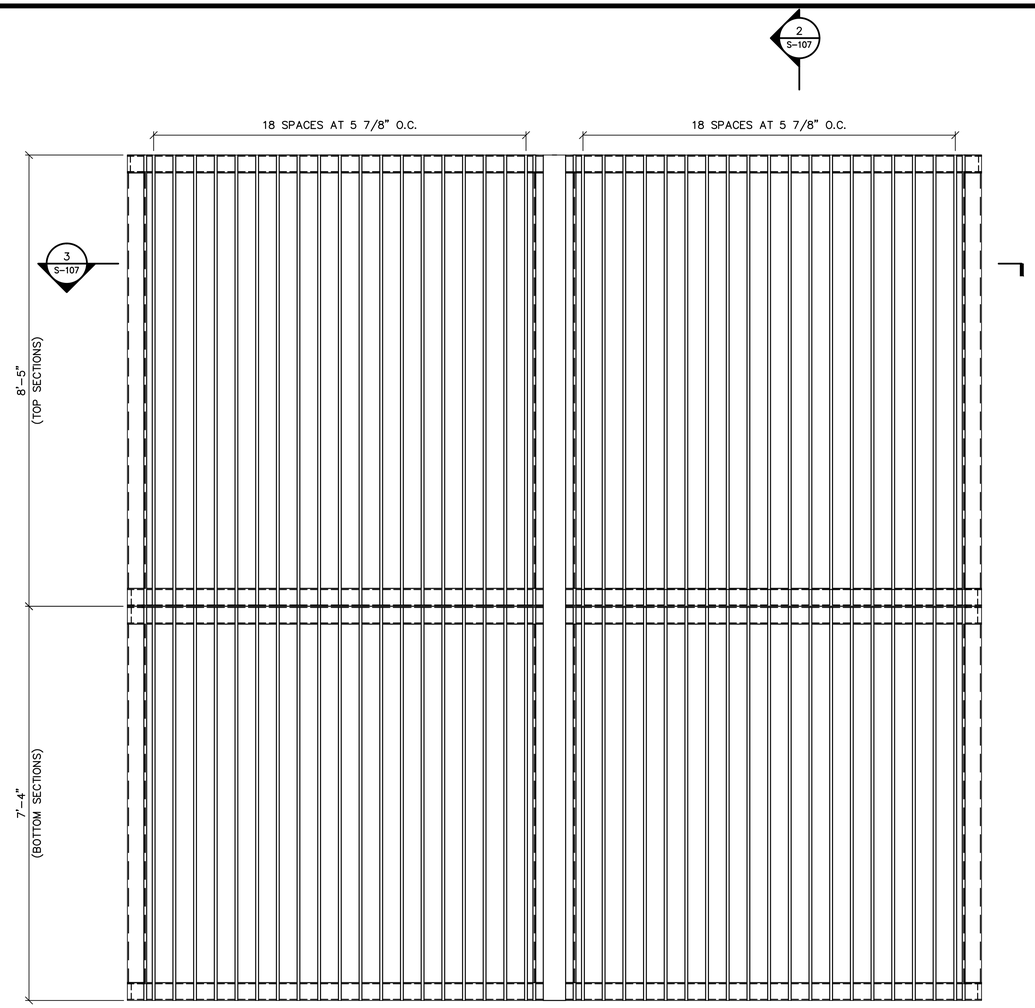

1 TRASH RACK ELEVATION
SCALE: 3/4" = 1'-0"

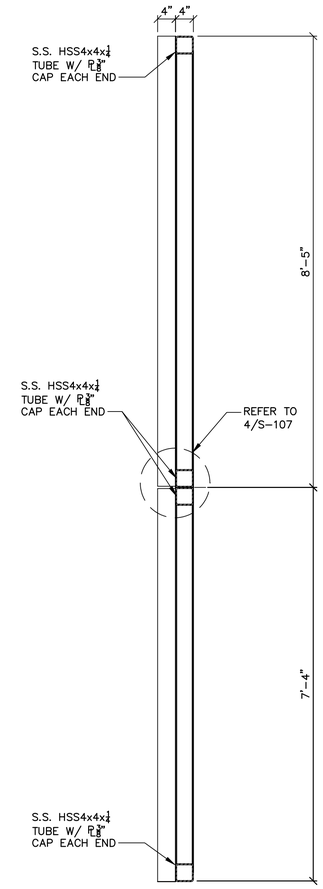

2 TRASH RACK SECTION
SCALE: 3/4" = 1'-0"

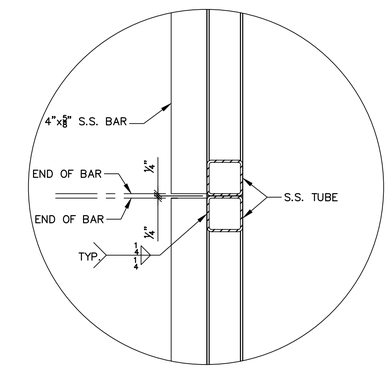

4 TRASH RACK CONNECTION DETAIL
SCALE: 1-1/2" = 1'-0"

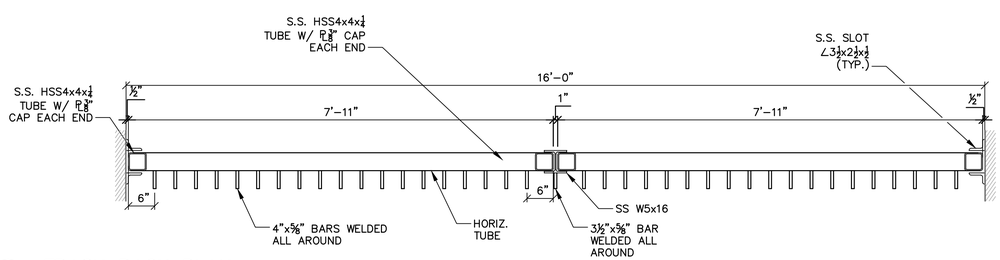

3 TRASH RACK PLAN
SCALE: 3/4" = 1'-0"

No.	DATE	DESCRIPTION	DESIGNER	REVIEWER
1.	6/11/2014	FOR BIDDING	KVO	KAB

SEAL

SEAL

SCALE:
HORZ.: AS SHOWN
VERT.:
DATUM:
HORZ.:
VERT.: NGVD 29
0
GRAPHIC SCALE

FUSS & O'NEILL
146 HARTFORD ROAD
MANCHESTER, CONNECTICUT 06040
860.646.2469
www.fando.com

CITY OF HARTFORD

NORTH MEADOW TRASH RACK DETAILS
-ALT#3 STAINLESS STEEL

NORTH MEADOW & SOUTH MEADOW PUMPING STATIONS
TRASH RACK REPLACEMENT

HARTFORD CONNECTICUT

PROJ. No.: 1997279.F54
DATE: JULY 2014

S-107

File Path: J:\DWG\P97\97279\F44\Structural\Plan\ST-301.dwg Layout: S-107 Plotted: Wed, June 11, 2014 - 1:19 PM User: kocomor
Plotter: DWG TO PDF.PC3 CTB File: F&O STANDARD.CTB
MS VIEW:
LAYER STATE:

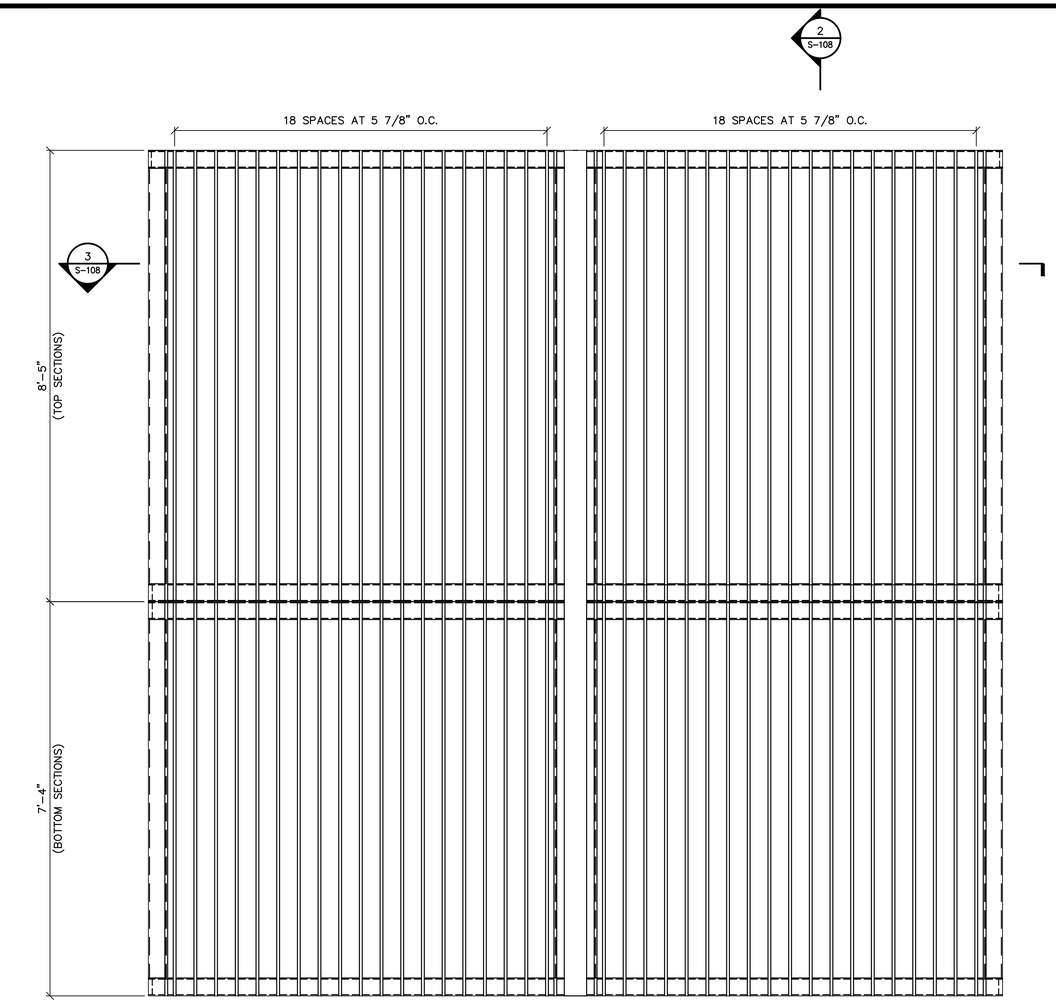

1 TRASH RACK ELEVATION
SCALE: 3/4" = 1'-0"

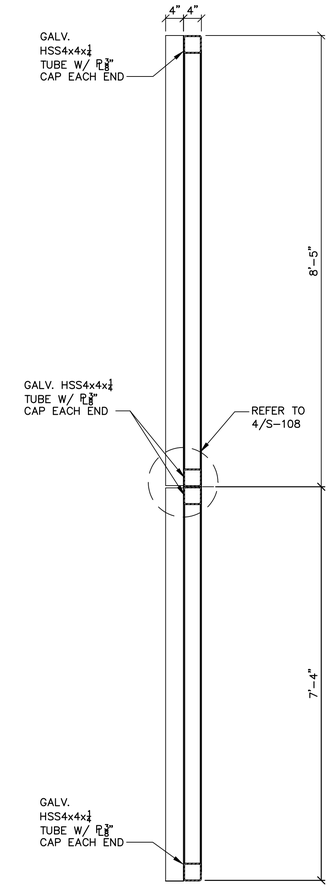

2 TRASH RACK SECTION
SCALE: 3/4" = 1'-0"

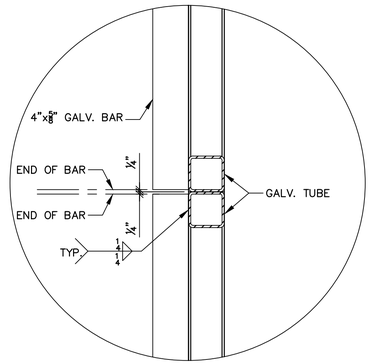

4 TRASH RACK CONNECTION DETAIL
SCALE: 1-1/2" = 1'-0"

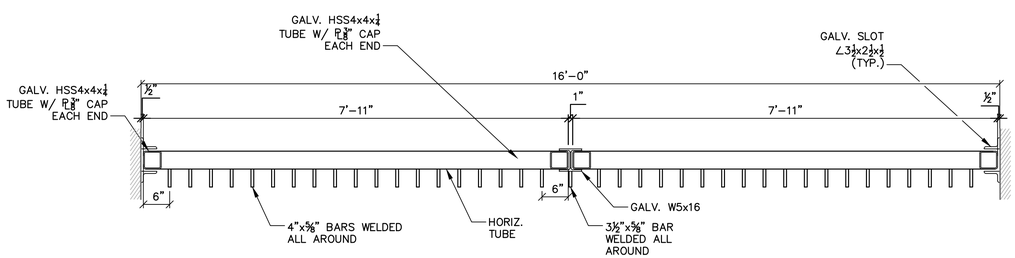

3 TRASH RACK PLAN
SCALE: 3/4" = 1'-0"

No.	DATE	DESCRIPTION	DESIGNER	REVIEWER
1.	6/11/2014	FOR BIDDING	KVO	KAB

SEAL

SEAL

SCALE:
HORZ.: AS SHOWN
VERT.:
DATUM:
HORZ.:
VERT.: NGVD 29
0
GRAPHIC SCALE

FUSS & O'NEILL
146 HARTFORD ROAD
MANCHESTER, CONNECTICUT 06040
860.646.2469
www.fando.com

CITY OF HARTFORD
NORTH MEADOW TRASH RACK DETAILS
-ALT#4 GALVANIZED
NORTH MEADOW & SOUTH MEADOW PUMPING STATIONS
TRASH RACK REPLACEMENT
HARTFORD CONNECTICUT

PROJ. No.: 1997279.F54
DATE: JULY 2014

S-108

File Path: J:\DWG\P97\97279\F44\Structural\Plan\ST-301.dwg Layout: S-108 Plotted: Wed, June 11, 2014 - 1:19 PM User: kocomnor
Plotter: DWG TO PDF.PC3 CTB File: F&O STANDARD.CTB
LAYER STATE:
MS VIEW:

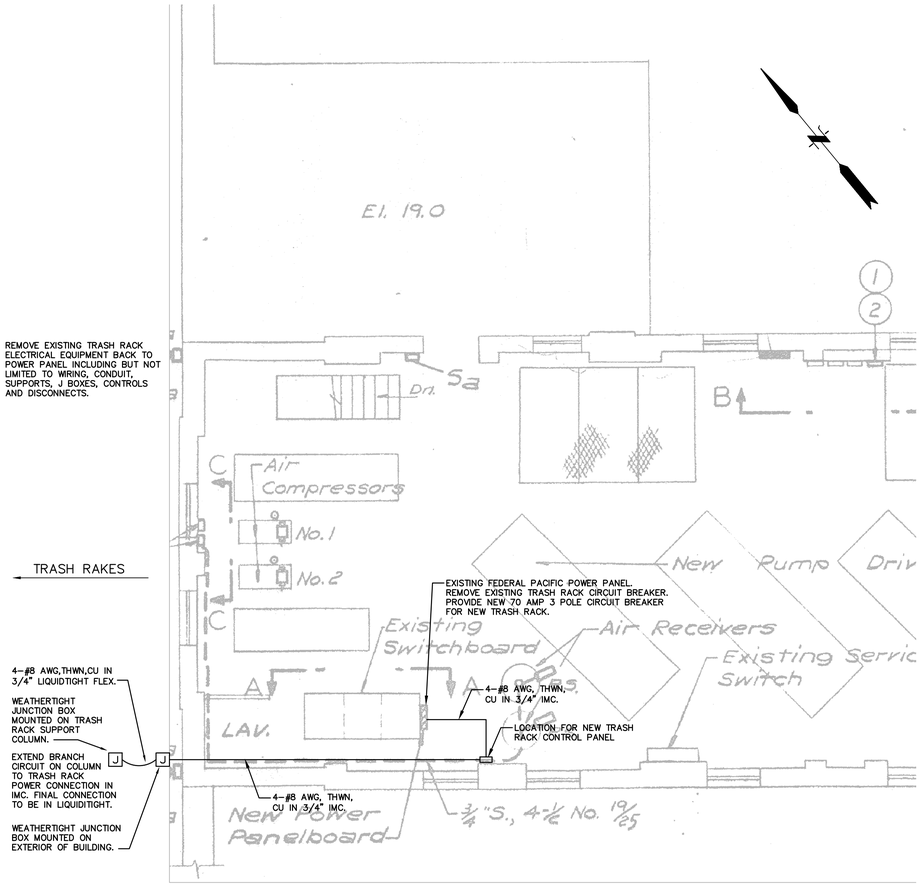

1 ELECTRICAL PLAN
NORTH MEADOWS PUMP STATION
SCALE: 1/4" = 1'-0"

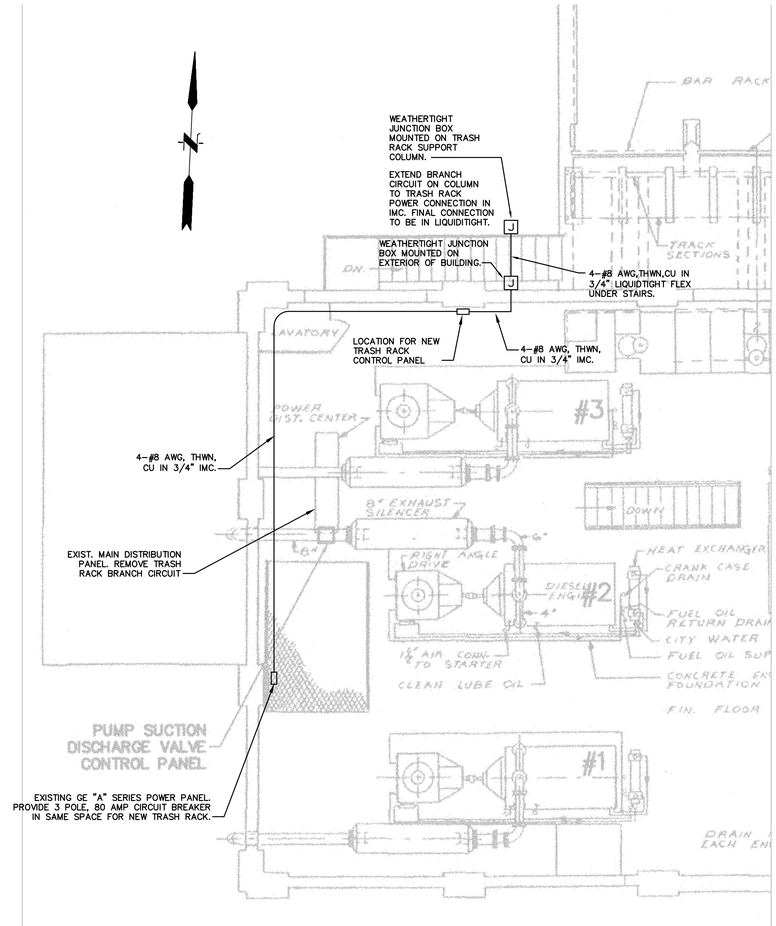

2 ELECTRICAL PLAN
SOUTH MEADOWS PUMP STATION
SCALE: 1/4" = 1'-0"

No.	DATE	DESCRIPTION	DESIGNER	REVIEWER
1.	6/11/2014	FOR BIDDING		

SEAL

SEAL

SCALE:
HORZ.: AS SHOWN
VERT.:
DATUM:
HORZ.:
VERT.:
0
GRAPHIC SCALE

FUSS & O'NEILL
146 HARTFORD ROAD
MANCHESTER, CONNECTICUT 06040
860.646.2469
www.fando.com

CITY OF HARTFORD

ELECTRICAL PLAN

NORTH MEADOW & SOUTH MEADOW PUMPING STATIONS
TRASH RACK REPLACEMENT

HARTFORD CONNECTICUT

PROJ. No.: 1997279.F54
DATE: JULY 2014

E-101

File Path: J:\DWG\P97\97279\F44\MEP\Plan\1997279.F44_E-101.dwg Layout: E-101 Plotted: Tue, June 10, 2014 - 4:53 PM User: kocomnor
Plotter: AL48-LG-MONO (MERGE).PC3 CTB File: FO 2008 MONO.CTB
LAYER STATE:
MS VIEW: