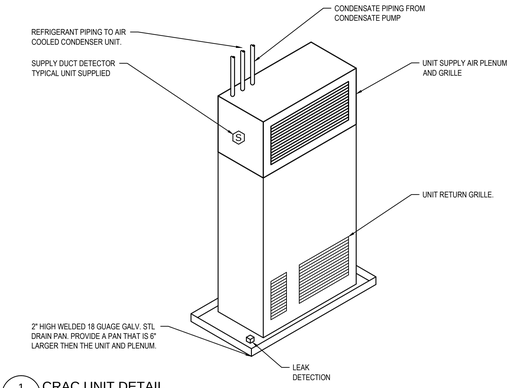

1 CRAC UNIT DETAIL
M3.01 NOT TO SCALE

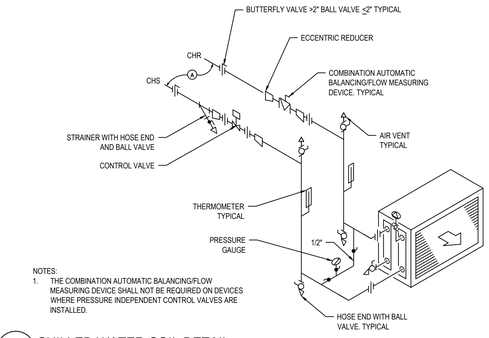

NOTES:
1. THE COMBINATION AUTOMATIC BALANCING/FLOW MEASURING DEVICE SHALL NOT BE REQUIRED ON DEVICES WHERE PRESSURE INDEPENDENT CONTROL VALVES ARE INSTALLED.

2 CHILLED WATER COIL DETAIL
M3.01 NOT TO SCALE

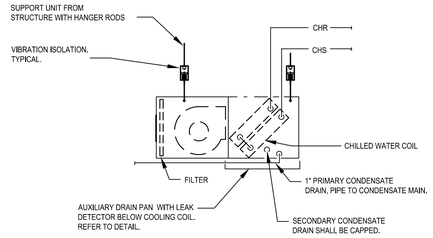

NOTES:
1. UNITS TO BE RH OR LH AS DETERMINED BY CONTRACTOR TO SUIT ACCESS REQUIREMENTS.

3 HORIZONTAL (2 PIPE) FAN COIL UNIT INSTALLATION DETAIL
M3.01 NOT TO SCALE

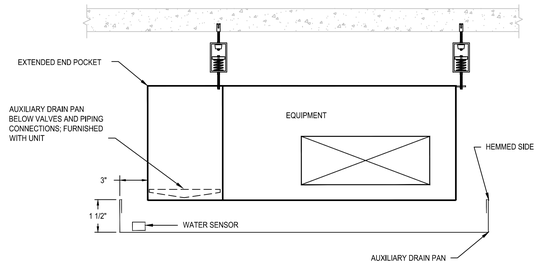

1. PROVIDE AUXILIARY DRAIN PAN UNDER FAN COIL UNIT.
2. PAN SHALL BE A MINIMUM OF 3" LARGER THAN THE COIL+AUXILIARY DRAIN PAN DIMENSIONS IN WIDTH AND LENGTH.
3. MAKE UPSTANDING SIDES 1 1/2" WITH 1/2" HEM TURNED DOWN INSIDE OF PAN.
4. PAN SHALL BE CONSTRUCTED OF STAINLESS STEEL: PANS SHALL HAVE A MINIMUM THICKNESS OF NOT LESS THAN 0.0276 INCH SHEET METAL WITH SOLDERED CORNERS FOR WATERTIGHTNESS.
5. WATER SENSOR AND CABLE SHALL BE PROVIDED TO SHUT OFF UNIT IN EVENT LEAK IS DETECTED. LEAK DETECTOR SHALL SEND A SIGNAL TO BMS UPON DETECTION OF MOISTURE.

4 AUXILIARY DRAIN PAN DETAIL
M3.01 NOT TO SCALE

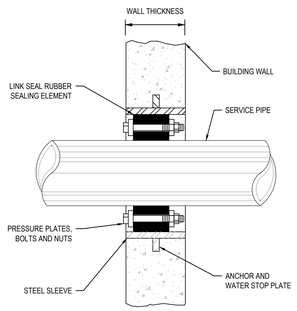

5 WALL SLEEVE DETAIL
M3.01 NOT TO SCALE

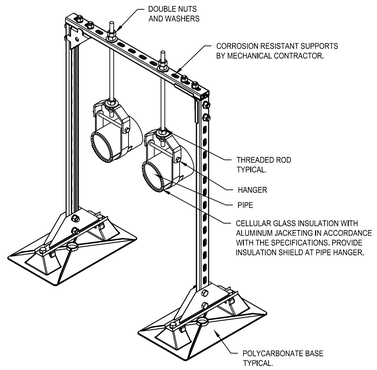

6 PIPING SUPPORT AT GRADE DETAIL
M3.01 NOT TO SCALE

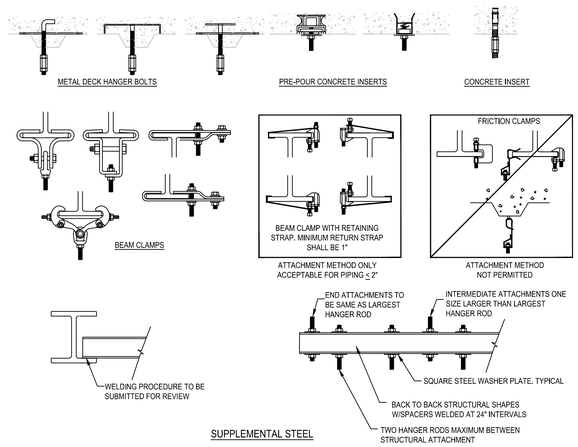

7 PIPE HANGER ATTACHMENT DETAIL
M3.01 NOT TO SCALE

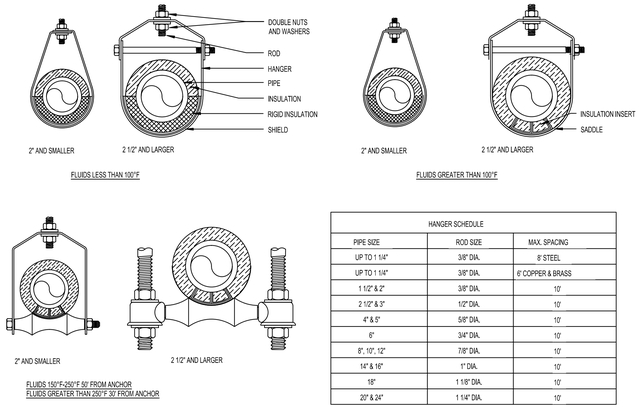

HANGER SCHEDULE		
PIPE SIZE	ROD SIZE	MAX. SPACING
UP TO 1 1/4"	3/8" DIA.	8' STEEL
UP TO 1 1/4"	3/8" DIA.	6' COPPER & BRASS
1 1/2" & 2"	3/8" DIA.	10'
2 1/2" & 3"	1/2" DIA.	10'
4" & 5"	5/8" DIA.	10'
6"	3/4" DIA.	10'
8", 10", 12"	7/8" DIA.	10'
14" & 16"	1" DIA.	10'
18"	1 1/8" DIA.	10'
20" & 24"	1 1/4" DIA.	10'

8 PIPE HANGER DETAIL
M3.01 NOT TO SCALE

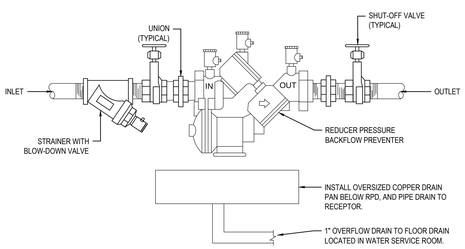

9 BACKFLOW PREVENTER DETAIL (2" AND SMALLER)
M3.01 NOT TO SCALE

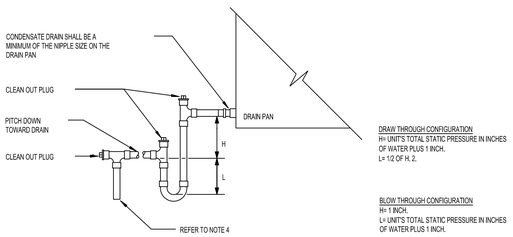

NOTES :
1. REFER TO FLOOR PLANS AND SCHEDULES TO DETERMINE UNIT'S CONFIGURATION.
2. REFER TO SCHEDULES FOR UNIT'S TOTAL STATIC PRESSURES.
3. MANUALLY PRIME TRAP PRIOR TO START-UP OF UNIT.
4. UNITS ABOVE CEILINGS: DRAIN PIPING SHALL BE INSULATED AND PIPED TO THE NEAREST DRAIN (UNLESS OTHERWISE NOTED) WITH AN AIR GAP OF 2 TIMES THE CONDENSATE DRAIN SIZE.
5. UNITS INSIDE BUILDING: DRAIN PIPING SHALL BE PIPED TO THE NEAREST DRAIN (UNLESS OTHERWISE NOTED) WITH AN AIR GAP OF 2 TIMES THE CONDENSATE DRAIN SIZE.

10 CONDENSATE DRAIN TRAP DETAIL
M5.02 NOT TO SCALE

NO.	DATE	REVISION

KOHLER RONAN, LLC
CONSULTING ENGINEERS
93 Lake Avenue, Danbury, CT 06810
203.778.1017 F 203.778.1018
1370 Broadway, New York, NY 10018
212.695.2422 F 212.695.2423
www.kohlerronan.com
E-mail krce@kohlerronan.com

CLIENT

WESTERN CONNECTICUT STATE UNIVERSITY
VISIUAL AND PERFORMING ARTS CENTER
DANBURY, CONNECTICUT

PROJECT

SERVER ROOM COOLING

TITLE

DETAILS - MECHANICAL
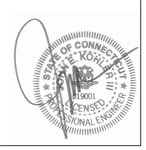
DRAWN BY:	FMD	DRAWING
CHECKED BY:	KR	M3.01
SCALE:	NOT TO SCALE	
DATE:	08/01/14