SVIGALS + PARTNERS
84 Orange Street + New Haven, Connecticut
203.786.5110 + www.svigals.com

Tighe&Bond
www.tighebond.com
1000 Bridgeport Avenue
Suite 320
Shelton, CT 06484
(203) 712-1100

MOVEMENT DIAGRAM

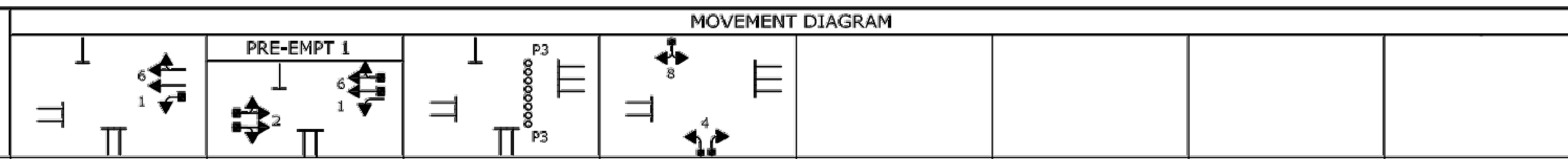

NTOR		PHASE 1			PHASE 2			PHASE 3			PHASE 4			PHASE 5			PHASE 6			PHASE 7			PHASE 8		
FACE #	FLASH	GRN	CL	CL	GRN	CL	CL	GRN	CL	CL	GRN	CL	CL	GRN	CL	CL	GRN	CL	CL	GRN	CL	CL	GRN	CL	CL
1		← G	←Y– G	G	G	Y	R	R	R	R	R	R	R												
2		R	R	R	G	Y	R	R	R	R	R	R	R												
4		R	R	R	R	R	R	R	R	R	G	Y	R												
6		G	G	G	G	Y	R	R	R	R	R	R	R												
8		R	R	R	R	R	R	R	R	R	G	Y	R												
P3		←		DW			→	WØ	←		DW		→												
						← YIELD PT.																			

INTERVALS	PHASE 1	PHASE 2	PHASE 3	PHASE 4	PHASE 5	PHASE 6	PHASE 7	PHASE 8
MIN GRN	5	20		9				
WALK			7					
PED CLR			13					
VEH EXT	5	5	ACCESSIBLE PEDESTRIAN SIGNAL	4				
MAX 1	10	33		23				
MAX 2	8	20		18				
YELLOW	3	4	4	3				
RED	0.1	2	0.1	2				
ADD INIT								
MAX INIT			COUNTDOWN PEDESTRIAN SIGNAL					
TBR								
TTR								
MIN GAP								
MODE	NON-LOCK	MIN RECALL	NON-LOCK	NON-LOCK	OFF	OFF	OFF	OFF
INT START		THIS PHASE						

DETECTORS

IDENT	SIZE (WXL)	TURNS	MODE
D1	6' x 6'	3	PRESENCE
D2	6' x 6'	3	PRESENCE
D3	6' x 6'	3	PRESENCE
D4	6' x 6'	3	PRESENCE
D5	6' x 6'	3	PRESENCE

PROGRAM / COORDINATION TYPE - CLOSED LOOP

FUNCTION	TIME	DAYS	CYCLE	OFFSET SEC	OFFSET %	Ø1	Ø2	Ø3	Ø4	Ø5	Ø6	Ø7	Ø8	PERMIS PERIOD Ø	PERMIS PERIOD SEC
FLASH	2200 - 0600	DAILY													
PATTERN 1	0630 - 2000	M-F	90	0	0	10/11	33/37	24/27	23/25						
	0800 - 1900	SAT-SUN													
PATTERN 5	ALL OTHER TIMES		70	10	14	8/11	20/29	24/34	18/26						

PHASE SPLITS SEC / %

SYSTEM LOC

MASTER	
106-213	
106-204	156-204
106-228	156-205
106-206	
156-230	
156-201	
156-239	
156-229	
156-202	
156-247	
156-203	
156-217	

TECHNICAL NOTES

STANDARD OVERLAP SKIP FEATURES APPLY.
TIMINGS SHOWN INDICATE FREE OPERATION.
ACTUAL TIMINGS TO BE DETERMINED BY CLOSED LOOP LOCAL COORDINATION UNIT.
PHASE 2 DETECTORS TO BE DISCONNECTED DURING COORDINATION.
COUNTDOWN DISPLAYS SHALL NOT BE USED DURING THE WALK INTERVAL, NOR DURING THE YELLOW CHANGE INTERVAL OF A CONCURRENT VEHICULAR PHASE.
PERCUSSIVE TONE ONLY DURING PEDESTRIAN WALK INTERVAL.

LEGEND:
R RED
Y YELLOW
G GREEN
FL. FLASHING
←R RED ARROW
←Y YELLOW ARROW
← GREEN ARROW
WØ WALK/ PED. CLR
D.W. DON'T WALK

ENERGY BY	CITY	ADDRESS # 10
MAINT LEVEL	NORMAL	SERVICE POLE UI 1167
UNMETERED SERVICE		

INTERSECTION # 156-229

SIGNAL FACES

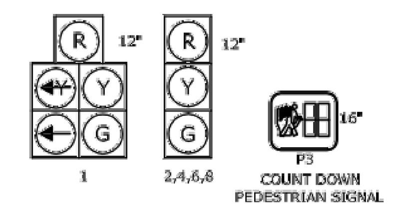

ALL INDICATIONS SHALL BE LED TYPE

PRE-EMPTION SETTINGS

	PRE-EMPT 1
PRIORITY	NO
DET. LOCK	YES
DELAY	0
ALT. MIN. GREEN	5
ALT. YELLOW	PARENT
ALT. RED	PARENT
ALT. PED. CLR.	NO
HOLD GREEN	15
HOLD YELLOW	4
HOLD RED	2
HOLD PHASE	2
EXIT PHASE	4
EXIT CALL	NONE

OFFICE RECORD

STC # SM #
REV.#6
SIGNAL PLAN REDRAWN, NEW SIGNAL EQUIPMENT, EXCLUSIVE PEDESTRIAN AND WB LEFT TURN ADVANCE PHASES ADDED.

STATE OF CONNECTICUT
DEPARTMENT OF TRANSPORTATION
BUREAU OF ENGINEERING & CONSTRUCTION
DIVISION OF TRAFFIC ENGINEERING

TRAFFIC CONTROL SIGNAL

CITY OF WEST HAVEN
U.S. ROUTE 1 (ORANGE AVENUE)
AT
ROCKVIEW STREET

REV #	TRAFFIC	DATE	ELECTRICAL	DATE
ENGINEER	TIGHE & BOND SHELTON, CONNECTICUT APRIL 2014			
DRAWN BY				
CHECKED BY				
SUBMITTED BY				
APPROVED BY				
DATE				

CONSTRUCTION NOTES

ALL MATERIAL AND CONSTRUCTION METHODS SHALL CONFORM TO THE 2009 MANUAL OF UNIFORM TRAFFIC CONTROL DEVICES AND THE FOLLOWING CURRENT D.O.T. DOCUMENTS, WHICH CAN BE ACCESSED ON THE D.O.T. WEBSITE:

- STANDARD SPECIFICATION FOR ROADS, BRIDGES AND INCIDENTAL CONSTRUCTION (FORM 816)
- SUPPLEMENTAL SPECIFICATIONS TO FORM 816
- SPECIAL PROVISIONS TO FORM 816.
- TYPICAL INSTALLATION DRAWINGS

ALL TRAFFIC SIGNAL EQUIPMENT IS NEW.

CONTRACTOR SHALL STAKE ALL R.O.W. PRIOR TO EXCAVATION. ALL WORK, INCLUDING ALL FOUNDATIONS SHALL BE WITHIN THE R.O.W.

ALL HANDHOLES ARE TYPE II UNLESS OTHERWISE SPECIFIED. CONTRACTOR SHALL INSTALL HANDHOLES APPROXIMATELY 1 FOOT BEHIND CURB OR IF NO CURB, 2 FEET BEHIND EDGE OF ROADWAY UNLESS OTHERWISE SPECIFIED.

INSTALL SPAN POLES SO THAT THE FACE IS AT LEAST APPROX. 2' BEHIND EDGE OF ROAD UNLESS OTHERWISE SPECIFIED.

CONTRACTOR SHALL TELEPHONE "CALL BEFORE YOU DIG" AT 1-800-922-4455 48 HOURS PRIOR TO ANY EXCAVATION. CONTRACTOR SHALL CONTACT UTILITY REPRESENTATIVES AND TOWN AGENCIES FOUR WEEKS PRIOR TO EXCAVATION.

LOOP DETECTORS ARE TO BE INSTALLED 3 FT. OFF EDGE OF ROADWAY OR CENTERED IN LANE AND 8 FT. APART UNLESS OTHERWISE SPECIFIED.

LOOP DETECTORS SHALL BE PLACED IN BITUMINOUS BASE COURSE IN AREAS OF NEW CONSTRUCTION AND IN EXISTING SURFACE COURSE IN AREAS WHERE EXISTING PAVEMENT WILL REMAIN.

ABANDON EXISTING DETECTOR LOOPS.

CONTRACTOR TO MAINTAIN TRAFFIC SIGNALIZATION DURING CONSTRUCTION AS APPROVED BY ENGINEER.

REMOVE EXISTING SIGNAL EQUIPMENT NOT BEING USED, POLES, SPAN WIRE CABLE, FOUNDATIONS, HANDHOLES, CONTROLLERS AND CABINETS.

THE CONTRACTOR SHALL OBTAIN ALL NECESSARY STATE AND TOWN PERMITS, INCLUDING BUT NOT LIMITED TO: SIDEWALK, CURB, AND ROAD OPENING.

ANY PROPOSED REVISIONS TO THE LOCATION OF THE APPURTENANCES SHOWN ON THE PLAN MUST BE SUBMITTED FOR REVIEW AND APPROVAL BY THE ENGINEER PRIOR TO INSTALLATION.

ALL SIGNS DAMAGED DURING CONSTRUCTION SHALL BE REPLACED IN KIND BY THE CONTRACTOR AT HIS EXPENSE. CONTRACTOR SHALL REMOVE ALL EXISTING SIGNS THAT CONFLICT WITH THE PROPOSED SIGNS.

CONTRACTOR SHALL TRIM ALL NECESSARY BUSHES, SHRUBS, TREES, ETC. OBSTRUCTING ANY TRAFFIC SIGNAL EQUIPMENT OR VISIBILITY OF SIGNAL HEADS.

SONIC AND OPTICAL DETECTOR LOCATIONS AND DETECTION ZONE ARE FOR ILLUSTRATION ONLY. EXACT LOCATIONS AND DETECTION ZONE SIZES SHALL BE DETERMINED BY THE MANUFACTURER. ALL CABLES ARE TO BE INSTALLED BY THE CONTRACTOR CONTINUOUS BETWEEN EACH SONIC AND OPTICAL DETECTOR TO THE CONTROLLER CABINET.

CONTRACTOR SHALL REPLACE IN KIND ALL DISTURBED AREAS (CURBING, SIDEWALK, ETC.) ASSOCIATED WITH THE CONSTRUCTION OF SIGNAL EQUIPMENT. THE LIMIT OF WORK ASSOCIATED WITH THE CONSTRUCTION OF SIGNAL EQUIPMENT SHALL BE A MINIMUM OF TEN (10) FEET UNLESS OTHERWISE SPECIFIED. CONTRACTOR SHALL VERIFY LIMITS OF EXISTING GRANITE STONE CURBING BEFORE EXCAVATION.

A VERTICAL CLEARANCE OF 16 TO 18 FEET OVER ROADWAY PAVEMENT IS REQUIRED FOR TRAFFIC SIGNALS.

CONTRACTOR TO PROVIDE FOUR SETS OF CABINET WIRING DIAGRAMS IN THE CABINET.

CONTRACTOR SHALL PROVIDE ALL NECESSARY APPURTENANCES TO CONNECT ELECTRICAL SERVICE TO EXISTING UTILITY POLE AND COORDINATE NEW SERVICE WITH UTILITY COMPANY TO ENSURE ELECTRICAL SERVICE IS AVAILABLE FOR SIGNAL ACTIVATION FOLLOWING COMPLETION OF THE CONTROLLER INSTALLATION AND WIRING.

CABINET DOOR TO OPEN FIELD SIDE.

CONTRACTOR TO INSTALL PAVEMENT MARKINGS AS INDICATED BELOW:

- PAVEMENT MARKINGS ON U.S. ROUTE 1, SEE ROADWAY CONSTRUCTION PLAN (SHEET TR1.01).
- PAVEMENT MARKINGS ON ROCKVIEW STREET, SEE DIMENSIONAL LAYOUT PLAN (SHEET C2.01) AND SITE MATERIALS PLAN (SHEET C3.01).

UTILITY CONTACTS

GEORGE REBENTISCH	CABLEVISION OF CONNECTICUT	(203) 696 - 4765
THOMAS JUDGE	UNITED ILLUMINATING COMPANY	(203) 926 - 4772
CARLOS VIZCARRONDO	AQUARION WATER COMPANY	(203) 337 - 5950
BRIAN EARLY	SOUTHERN CONNECTICUT GAS	(203) 499 - 3188
CAROL BISHOP	AT&T	(203) 383 - 6679
DAVID OLIVEIRA	CHARTER COMMUNICATIONS	(203) 304 - 4001 x54205

REV. #
INTERSECTION # 156-229

NO.	DATE	INIT.	DESCRIPTION

REVISIONS

SIGN LEGEND:

- (A) INSTALL 31-0370 (ONLY) 48" X 30"
- (B) INSTALL 31-0290 (ONLY ONLY) 36" X 30"
- (C) INSTALL 31-1701 ("NO TRUCKS (SYMBOL)") 24" X 24"
- (D) INSTALL XX-XXXX ("CT TRANSIT BUS STOP") 12" X 18"
- (E) INSTALL SPAN MOUNT 31-0135 (ONLY) 24" X 24"

REV # INTERSECTION # 156-229

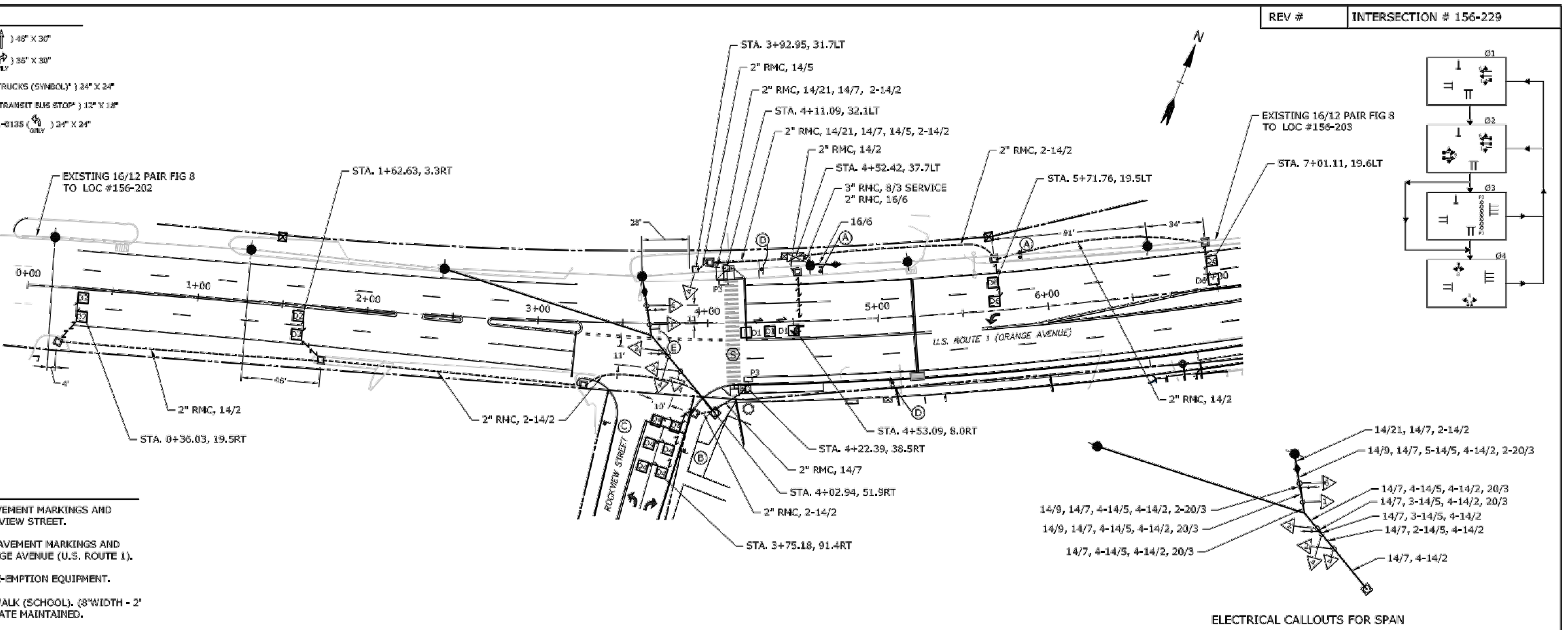

ELECTRICAL CALLOUTS FOR SPAN
NOT TO SCALE

STATE SIGNAL

NOTES:

CITY TO MAINTAIN PAVEMENT MARKINGS AND SIGNING ALONG ROCKVIEW STREET.

STATE TO MAINTAIN PAVEMENT MARKINGS AND SIGNING ALONG ORANGE AVENUE (U.S. ROUTE 1).

CITY TO MAINTAIN PRE-EMPTION EQUIPMENT.

(S) BAR TYPE CROSSWALK (SCHOOL). (8'WIDTH - 2' BAR, 2' SPACE) STATE MAINTAINED.

SCALE 1" = 40'

SG-1732.dwg

PROPOSED WOOD SPAN POLE
EXISTING WOOD SPAN POLE
PROPOSED STEEL SPAN POLE
EXISTING STEEL SPAN POLE
PROPOSED UTILITY POLE
EXISTING UTILITY POLE
PEDESTRIAN SIGNAL FACE
DIRECTIONAL ARW. FOR PUSH BUTTON
PROPOSED CONTROLLER TRAFFIC
SIGNAL FACE
PEDESTRIAN PUSH BUTTON & SIGN
PEDESTAL MOUNTING
PROPOSED R.M.C. (RIGID METAL CONDUIT)
EXISTING R.M.C. (RIGID METAL CONDUIT)
DET. LEADS IN SAW CUT
AUXILIARY TERMINATION CABINET
AUXILIARY EQUIPMENT CABINET
VIDEO DETECTOR
OPTICAL DETECTOR
SD SYSTEM DETECTOR
EXISTING CONTROLLER
PROPOSED HANDHOLE
EXISTING HANDHOLE
SIDEWALK RAMP
SONIC DETECTOR
GUY WIRE LOOP
DETECTOR MAGNETIC
DETECTOR CABLE
CLOSURE

DRAWN BY :	RMR
DESIGNED BY :	RMR
DATE PLOTTED :	Jun 18, 2014

STATE OF CONNECTICUT
DEPARTMENT OF TRANSPORTATION

CITY OF WEST HAVEN
U.S. ROUTE 1 (ORANGE AVENUE)
AT
ROCKVIEW STREET

Tighe&Bond
www.tighebond.com
1000 Bridgeport Avenue
Suite 320
Shelton, CT 06484
(203) 712-1100

TOWN: WEST HAVEN	PROJECT NO. 28-1732
	DRAWING NO. SG-1732.dwg
DRAWING TITLE: TRAFFIC CONTROL SIGNAL PLAN	SHEET NO. SG-1

Jun 18, 2014-12:00pm Plotted By: rmr
Tighe & Bond, Inc. J:\S\S1732 Svigals ESUMS\DRAWINGS\0_Current\Drawings\SG-1732.dwg

Jun 18, 2014-12:03pm Plotted By: rmr
Tighe & Bond, Inc. J:\S\S1732 Svigals ESUMS\DRAWINGS\0_Current\Drawings\DS-S1732-01.dwg

REVISION LOG:

No.	Description	Date

PROJECT NAME:
ENGINEERING & SCIENCE UNIVERSITY MAGNET SCHOOL

500 BOSTON POST ROAD
WEST HAVEN, CONNECTICUT 06516

PHASE:
CONSTRUCTION DOCUMENTS PHASE 2 OF 3

DRAWING TITLE:
TRAFFIC CONTROL SIGNAL PLAN

SCALE:	DATE:
1" = 40'	JULY 11, 2013
JOB NUMBER:	SDE NUMBER:
S1732	093-0357 MAG/N

DRAWING NUMBER:
TR1.00

7/18/2013 5:53:25 PM

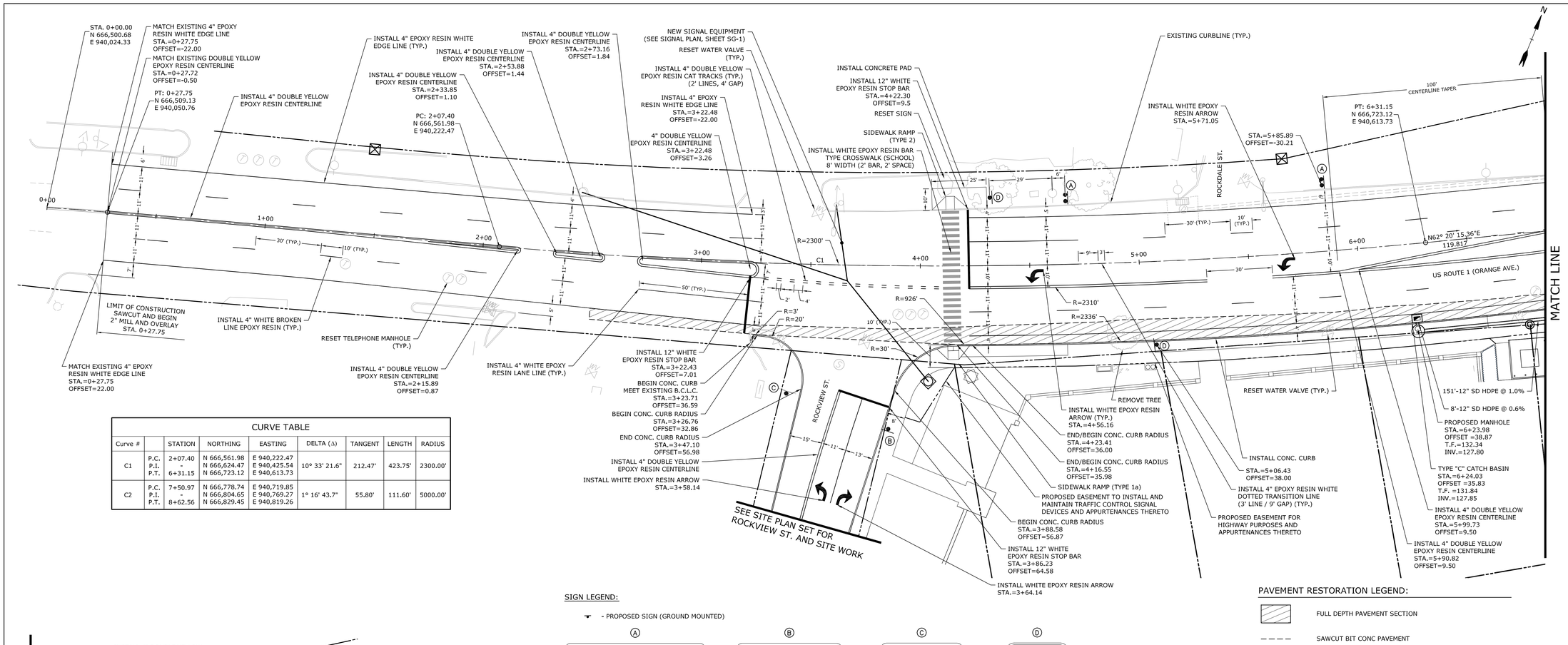

CURVE TABLE								
Curve #		STATION	NORTHING	EASTING	DELTA (Δ)	TANGENT	LENGTH	RADIUS
C1	P.C. P.I. P.T.	2+07.40 - 6+31.15	N 666,561.98 N 666,624.47 N 666,723.12	E 940,222.47 E 940,425.54 E 940,613.73	10° 33' 21.6"	212.47'	423.75'	2300.00'
C2	P.C. P.I. P.T.	7+50.97 - 8+62.56	N 666,778.74 N 666,804.65 N 666,829.45	E 940,719.85 E 940,769.27 E 940,819.26	1° 16' 43.7"	55.80'	111.60'	5000.00'

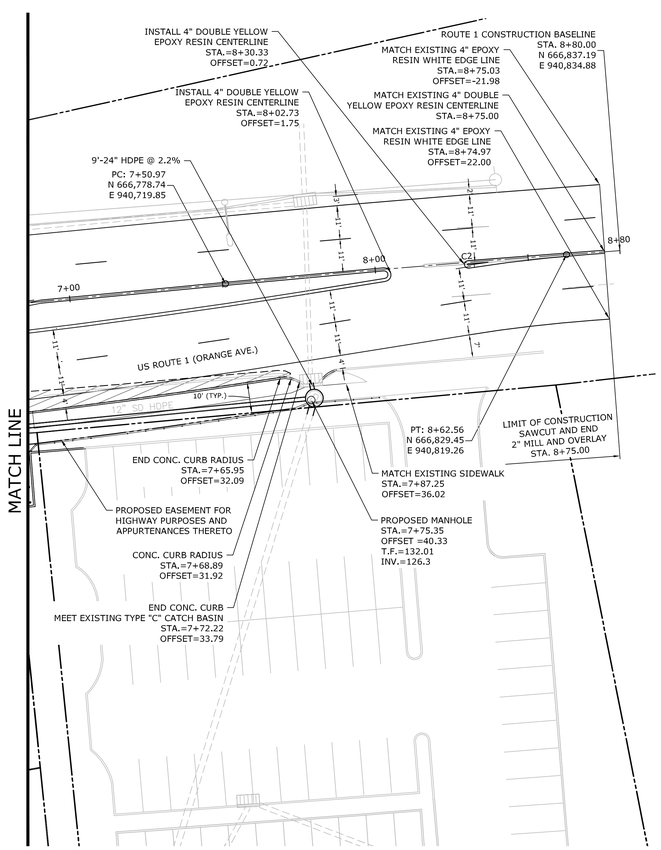

SIGN LEGEND:

- PROPOSED SIGN (GROUND MOUNTED)

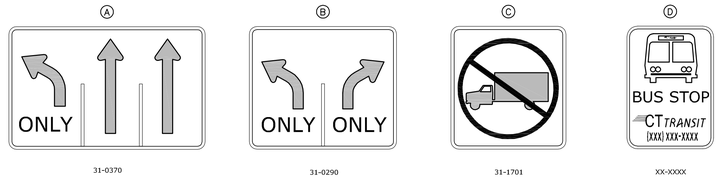

GENERAL NOTES:

1. BACKGROUND INFORMATION BASED ON SITE SURVEY CONFORMING TO HORIZONTAL ACCURACY CLASS A-2 AND TOPOGRAPHIC ACCURACY CLASS T-2 PREPARED BY LANGAN, DATED MAY 1, 2013.
2. THE BEARINGS DEPICTED HEREON ARE BASED UPON THE CONNECTICUT STATE COORDINATE SYSTEM N.A.D. 1983 ESTABLISHED THROUGH GPS METHODS.
3. ELEVATIONS ARE BASED UPON N.G.V.D. 1988 DATUM ESTABLISHED THROUGH GPS METHODS.
4. NEW SIGNAL EQUIPMENT SHOWN ON TRAFFIC CONTROL SIGNAL PLAN, SEE SHEET SG-1.
5. ALL MANHOLES, GAS GATES, WATER VALVES AND OTHER UTILITY STRUCTURES LOCATED WITHIN THE MILL AND OVERLAY AREA TO BE ADJUSTED AS NEEDED TO MATCH FINISHED GRADE.

PAVEMENT RESTORATION LEGEND:

FULL DEPTH PAVEMENT SECTION

SAWCUT BIT CONC PAVEMENT

1. FINAL LIMITS OF PAVEMENT RESTORATION WILL BE DETERMINED BY THE DEPARTMENT OF TRANSPORTATION.
2. MILL AND OVERLAY U.S. ROUTE 1 WITHIN PROJECT LIMITS OUTSIDE FULL DEPTH PAVEMENT RECONSTRUCITON.
3. SAWCUT PAVEMENT ALONG MILLING AND OVERLAY LIMITS PRIOR TO MILLING OPERATIONS.

CONSTRUCTION NOTES:

1. ALL WORK WITHIN THE STATE OF CONNECTICUT RIGHT OF WAY SHALL CONFORM TO STATE OF CONNECTICUT DEPARTMENT OF TRANSPORTATION STANDARD DETAILS. STANDARD DETAILS HAVE BEEN PROVIDED IN THE SET OF DRAWINGS AND ARE AVAILABLE ON THE CONNECTICUT DEPARTMENT OF TRANSPORTATION WEBSITE.
2. REMOVAL OF PAVEMENT MARKINGS ALONG STATE ROADWAYS SHALL BE COMPLETED BY A NON-DESTRUCTIVE METHOD IN COMPLIANCE WITH THE STATE OF CONNECTICUT DEPARTMENT OF TRANSPORTATION STANDARD SPECIFICATIONS FOR ROADS, BRIDGES, AND INCIDENTAL CONSTRUCTION FORM 816 SECTION 12.11 AS REVISED.
3. NEW PAVEMENT MARKINGS ON U.S. ROUTE 1 (ORANGE AVENUE) SHALL BE EPOXY RESIN IN COMPLIANCE WITH THE STATE OF CONNECTICUT DEPARTMENT OF TRANSPORTATION STANDARD SPECIFICATIONS FOR ROADS, BRIDGES, AND INCIDENTAL CONSTRUCTION FORM 816 SECTION 12.10 AS REVISED.
4. NEW SIGN MATERIAL AND SHEETING SHALL BE MADE OF RETROREFLECTIVE MATERIAL IN COMPLIANCE WITH THE STATE OF CONNECTICUT DEPARTMENT OF TRANSPORTATION STANDARD SPECIFICATIONS FOR ROADS, BRIDGES, AND INCIDENTAL CONSTRUCTION FORM 816 SECTION 12.08 AS REVISED. TYPE IV REFLECTIVE SHEETING SHALL BE USED FOR SIGNS WITH WHITE BACKGROUND, TYPE III REFLECTIVE SHEETING SHALL BE USED FOR SIGNS WITH COLORED BACKGROUND EXCEPT FOR SIGNS WITH RED BACKGROUND THAT SHALL BE TYPE 8 OR 9 REFLECTIVE SHEETING.
5. ALL SIGNS AND PAVEMENT MARKINGS INSTALLED ALONG THE STATE HIGHWAY MUST CONFORM TO THE "MANUAL ON UNIFORM TRAFFIC CONTROL DEVICES," THE LATEST STATE OF CONNECTICUT CATALOG OF SIGNS AND STANDARDS AS REVISED.
6. ANY DAMAGE TO EXISTING CURB, SIDEWALK OR ANY OTHER HIGHWAY APPURTENANCES DURING DEVELOPMENT OF THE PERMITTED SITE SHALL BE REPLACED BY THE CONTRACTOR AS DIRECTED BY THE DISTRICT 3 PERMIT SECTION AT NO COST TO THE STATE OR OWNER.

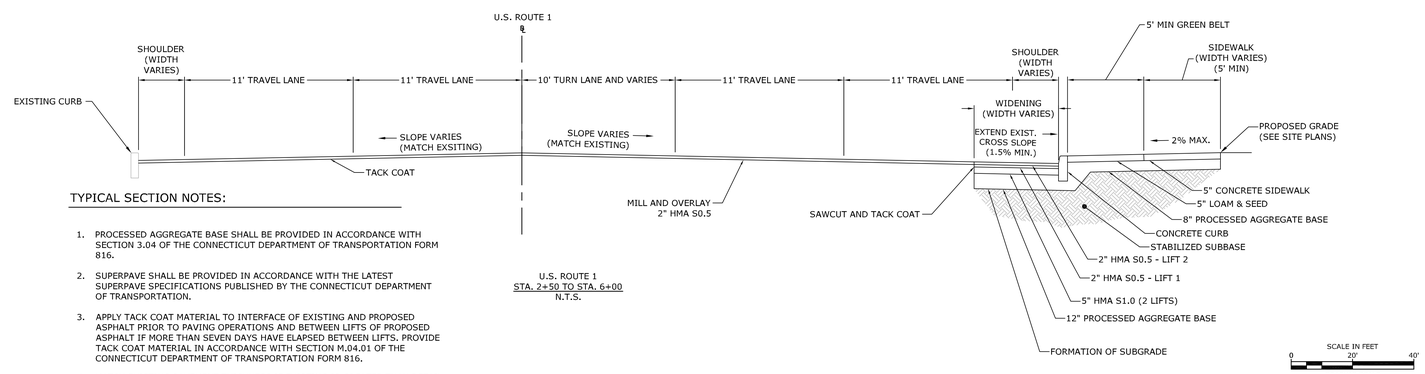

U.S. ROUTE 1
STA. 2+50 TO STA. 6+00
N.T.S.

TYPICAL SECTION NOTES:

1. PROCESSED AGGREGATE BASE SHALL BE PROVIDED IN ACCORDANCE WITH SECTION 3.04 OF THE CONNECTICUT DEPARTMENT OF TRANSPORTATION FORM 816.
2. SUPERPAVE SHALL BE PROVIDED IN ACCORDANCE WITH THE LATEST SUPERPAVE SPECIFICATIONS PUBLISHED BY THE CONNECTICUT DEPARTMENT OF TRANSPORTATION.
3. APPLY TACK COAT MATERIAL TO INTERFACE OF EXISTING AND PROPOSED ASPHALT PRIOR TO PAVING OPERATIONS AND BETWEEN LIFTS OF PROPOSED ASPHALT IF MORE THAN SEVEN DAYS HAVE ELAPSED BETWEEN LIFTS. PROVIDE TACK COAT MATERIAL IN ACCORDANCE WITH SECTION M.04.01 OF THE CONNECTICUT DEPARTMENT OF TRANSPORTATION FORM 816.
4. MATCH EXISTING PAVEMENT THICKNESS IF EXISTING IS GREATER THAN DETAIL

SVIGALS + PARTNERS
84 Orange Street + New Haven, Connecticut
203.786.5110 + www.svigals.com

Tighe&Bond
www.tighebond.com
1000 Bridgeport Avenue
Suite 320
Shelton, CT 06484
(203) 712-1100

REVISION LOG:

No.	Description	Date

PROJECT NAME:

ENGINEERING & SCIENCE UNIVERSITY MAGNET SCHOOL

500 BOSTON POST ROAD
WEST HAVEN, CONNECTICUT 06516

PHASE:

CONSTRUCTION DOCUMENTS PHASE 2 OF 3

DRAWING TITLE:

ROADWAY CONSTRUCTION PLAN

SCALE:	DATE:
1" = 20'	JULY 11, 2013
JOB NUMBER:	SDE NUMBER:
S1732	093-0357 MAG/N

DRAWING NUMBER:

TR1.01

Jun 18, 2014-11:44am Plotted By: rmr
Tighe & Bond, Inc. J:\S\S1732 Svigals ES\NRS\DRAWINGS\S_Current\Drawings\RWY-S1732-01.DWG
7/18/2013 5:53:25 PM

R1 - SERIES

R1-1 *

STOP

LEGEND - WHITE
BACKGROUND - RED

AREA (SQ. FT)	SIZE (INCHES)	CONN. D.O.T. #	POSTS	ALUM. THK.
3.31	24	31-0536	1	.080
5.19	30	31-0552	1	.080
7.98	36	31-0553	1	.080
13.3	48	31-0557	2	.100

R1-2 *

YIELD

LEGEND - RED
BACKGROUND -WHITE

AREA (SQ. FT)	SIZE (INCHES)	CONN. D.O.T. #	POSTS	ALUM. THK.
3.90	36	31-0523	1	.080
6.77	48	31-0522	2B	.100
10.83	60	31-0528	2B	.100

R1-3 *

ALL-WAY

LEGEND - WHITE
BACKGROUND - RED

AREA (SQ. FT)	SIZE (INCHES)	CONN. D.O.T. #	POSTS	ALUM. THK.
0.75	18X6	31-0508		.080

R2 - SERIES

R2-1

SPEED LIMIT 00

AREA (SQ. FT)	SIZE (INCHES)	CONN. D.O.T. #	POSTS	ALUM. THK.
5.00	24X30	31-5505	1	.080
7.50	30X36	31-5504	1	.080
12.00	36X48	31-5506	2	.100
20.00	48X60	31-5507	2	.100

R2-4a

SPEED LIMIT 00 MINIMUM 00

AREA (SQ. FT)	SIZE (INCHES)	CONN. D.O.T. #	POSTS	ALUM. THK.
32.00	48X96	31-5510	2B	.125

SPEED CHECKED BY RADAR

AREA (SQ. FT)	SIZE (INCHES)	CONN. D.O.T. #	POSTS	ALUM. THK.
5.00	24X30	31-5512	1	.080
20.00	48X60	31-5532	2	.100

R3 - SERIES

R3-1

NO RIGHT TURN

31-1604 OVERHEAD MTD
LEGEND - BLACK
BACKGROUND - WHITE
CIRCLE & DIAGONAL - RED

AREA (SQ. FT)	SIZE (INCHES)	CONN. D.O.T. #	POSTS	ALUM. THK.
4.00	24X24	31-1604		.080
6.25	30X30	31-1617	1	.080
5.00	30X24	31-1618		.080
9.00	36X36	31-1627	2	.080
7.50	36X30	31-1628		.080

R3-2

NO LEFT TURN

31-1603 OVERHEAD MTD
LEGEND - BLACK
BACKGROUND - WHITE
CIRCLE & DIAGONAL - RED

AREA (SQ. FT)	SIZE (INCHES)	CONN. D.O.T. #	POSTS	ALUM. THK.
4.00	24X24	31-1603		.080
6.25	30X30	31-1619	1	.080
5.00	30X24	31-1620		.080
9.00	36X36	31-1629	2	.080
7.50	36X30	31-1630		.080

R3-3

NO TURNS

AREA (SQ. FT)	SIZE (INCHES)	CONN. D.O.T. #	POSTS	ALUM. THK.
4.00	24X24	31-1648	1	.080
9.00	36X36	31-1647	1	.080

R3-4

LEGEND - BLACK
BACKGROUND - WHITE
CIRCLE & DIAGONAL - RED

AREA (SQ. FT)	SIZE (INCHES)	CONN. D.O.T. #	POSTS	ALUM. THK.
4.00	24X24	31-1622	1	.080
9.00	36X36	31-1632	1	.080

R3-5

ONLY (L) ONLY (R)

AREA (SQ. FT)	SIZE (INCHES)	CONN. D.O.T. #	POSTS	ALUM. THK.
4.00	24X24	31-0135L	1	.080
4.00	24X24	31-0138R	1	.080
7.50	30X36	31-0183L	1	.080
7.50	30X36	31-0184R	1	.080

R3-6

(L) (R)

AREA (SQ. FT)	SIZE (INCHES)	CONN. D.O.T. #	POSTS	ALUM. THK.
7.50	30X36	31-0157L	1	.080
7.50	30X36	31-0158R	1	.080

R3-7L LEFT LANE MUST TURN LEFT

R3-7R RIGHT LANE MUST TURN RIGHT

AREA (SQ. FT)	SIZE (INCHES)	CONN. D.O.T. #	POSTS	ALUM. THK.
6.25	30X30	31-0117L	1	.080
6.25	30X30	31-0118R	1	.080
9.00	36X36	31-0120L	1	.080
9.00	36X36	31-0123R	1	.080

R3-48

ONLY (L) ONLY (R)

AREA (SQ. FT)	SIZE (INCHES)	CONN. D.O.T. #	POSTS	ALUM. THK.
6.25	30X30	31-0262L	1	.080
6.25	30X30	31-0261R	1	.080

ONLY

AREA (SQ. FT)	SIZE (INCHES)	CONN. D.O.T. #	POSTS	ALUM. THK.
4.00	24X24	31-0125	1	.080
6.25	30X30	31-0165	1	.080
7.50	30X36	31-0175	1	.080

ONLY ONLY

AREA (SQ. FT)	SIZE (INCHES)	CONN. D.O.T. #	POSTS	ALUM. THK.
5.00	30X24	31-0290	1	.080

ONLY ONLY

31-0222 31-0223

AREA (SQ. FT)	SIZE (INCHES)	CONN. D.O.T. #	POSTS	ALUM. THK.
6.25	30X30		1	.080

ONLY ONLY

31-0282 31-0283

AREA (SQ. FT)	SIZE (INCHES)	CONN. D.O.T. #	POSTS	ALUM. THK.
7.50	36X30		2	.080

ONLY ONLY

31-0295 31-0219

AREA (SQ. FT)	SIZE (INCHES)	CONN. D.O.T. #	POSTS	ALUM. THK.
7.50	36X30		2	.080

R3-8b

ONLY ONLY

AREA (SQ. FT)	SIZE (INCHES)	CONN. D.O.T. #	POSTS	ALUM. THK.
10.00	48X30	31-0302	2	.100

ONLY

AREA (SQ. FT)	SIZE (INCHES)	CONN. D.O.T. #	POSTS	ALUM. THK.
8.75	42X30	31-0334	2	.100

ONLY ONLY

31-0307 31-0372

AREA (SQ. FT)	SIZE (INCHES)	CONN. D.O.T. #	POSTS	ALUM. THK.
10.00	48X30		2	.100

ONLY ONLY

31-0370 31-0371

AREA (SQ. FT)	SIZE (INCHES)	CONN. D.O.T. #	POSTS	ALUM. THK.
8.75	42X30		2	.100

LEFT LANE MUST TURN LEFT

RIGHT LANE MUST TURN RIGHT

AREA (SQ. FT)	SIZE (INCHES)	CONN. D.O.T. #	POSTS	ALUM. THK.
20.00	48X60	31-0121L	2	.100
20.00	48X60	31-0122R	2	.100

LEFT LANE MUST TURN LEFT AHEAD

RIGHT LANE MUST TURN RIGHT AHEAD

AREA (SQ. FT)	SIZE (INCHES)	CONN. D.O.T. #	POSTS	ALUM. THK.
20.00	48X60	31-0124L	2	.100
20.00	48X60	31-0137R	2	.100

R4 - SERIES

R4-1

DO NOT PASS

AREA (SQ. FT)	SIZE (INCHES)	CONN. D.O.T. #	POSTS	ALUM. THK.
5.00	24X30	31-1502	1	.080

KEEP RIGHT EXCEPT TO PASS

AREA (SQ. FT)	SIZE (INCHES)	CONN. D.O.T. #	POSTS	ALUM. THK.
20.00	48X60	31-1574	2	.100

SLOW VEHICLES KEEP RIGHT

AREA (SQ. FT)	SIZE (INCHES)	CONN. D.O.T. #	POSTS	ALUM. THK.
20.00	48X60	31-1504	2	.100

R4-3

SLOWER TRAFFIC KEEP RIGHT

AREA (SQ. FT)	SIZE (INCHES)	CONN. D.O.T. #	POSTS	ALUM. THK.
5.00	24X30	31-1562	1	.080
20.00	48X60	31-1564	2	.100

R4-7

AREA (SQ. FT)	SIZE (INCHES)	CONN. D.O.T. #	POSTS	ALUM. THK.
5.00	24X30	31-1526	1	.080
12.00	36X48	31-1536	2	.100
20.00	48X60	31-1546	2	.100

R5 - SERIES

R5-1 *

DO NOT ENTER

LEGEND - WHITE
BACKGROUND - WHITE
CIRCLE - RED

AREA (SQ. FT)	SIZE (INCHES)	CONN. D.O.T. #	POSTS	ALUM. THK.
6.25	30X30	31-1119	1	.080
9.00	36X36	31-1120	1	.080
16.00	48X48	31-1121	2	.100

PROHIBITED PEDESTRIANS MOTOR BIKES MOTOR SCOOTERS BICYCLES

AREA (SQ. FT)	SIZE (INCHES)	CONN. D.O.T. #	POSTS	ALUM. THK.
6.00	36X24	31-1777	2	.080

R5-1 *

WRONG WAY

LEGEND - WHITE
BACKGROUND - RED

AREA (SQ. FT)	SIZE (INCHES)	CONN. D.O.T. #	POSTS	ALUM. THK.
6.00	36X24	31-1122	2	.080
8.75	42X30	31-1123	2	.100

EMERGENCY AND AUTHORIZED VEHICLES ONLY

AREA (SQ. FT)	SIZE (INCHES)	CONN. D.O.T. #	POSTS	ALUM. THK.
5.00	24X30	31-1790	1	.080
20.00	48X60	31-1792	2	.100

PROHIBITED
COMMERCIAL VEH TRAILERS
COMBINATION VEH OVER 7500 LBS
VEH. OVER 8' HIGH
MOPEDS - BICYCLES PEDESTRIANS

AREA (SQ. FT)	SIZE (INCHES)	CONN. D.O.T. #	POSTS	ALUM. THK.
27.00	54X72	31-1719	2	.125

R5-10c

PEDESTRIANS PROHIBITED

AREA (SQ. FT)	SIZE (INCHES)	CONN. D.O.T. #	POSTS	ALUM. THK.
2.00	24X12	31-1776	1	.080

R6 - SERIES

R6-1

(L) ONE WAY
(R) ONE WAY

AREA (SQ. FT)	SIZE (INCHES)	CONN. D.O.T. #	POSTS	ALUM. THK.
3.00	36X12	31-1188L	1	.080
3.00	36X12	31-1177R	1	.080
6.75	54X18	31-1189L	1	.100
6.75	54X18	31-1178R	1	.100

R7 - SERIES

(R) (D) (L) (P) (NO ARROW)

HANDICAPPED PARKING PERMIT REQUIRED
VIOLATORS WILL BE FINED MIN $150

LEGEND - WHITE
BACKGROUND - BLUE

AREA (SQ. FT)	SIZE (INCHES)	CONN. D.O.T. #	POSTS	ALUM. THK.
2.00	12X24	31-0629	1	.080

R7-1

NO PARKING ANY TIME

(R) (D) (L)

LEGEND - RED
BACKGROUND - WHITE

AREA (SQ. FT)	SIZE (INCHES)	CONN. D.O.T. #	POSTS	ALUM. THK.
1.50	12X18	31-0630	1	.080

R7-2

NO PARKING 0:00 AM TO 0:00 PM

VARIABLE TIMES
(R) (D) (L)

LEGEND - RED
BACKGROUND - WHITE

AREA (SQ. FT)	SIZE (INCHES)	CONN. D.O.T. #	POSTS	ALUM. THK.
1.50	12X18	31-0603	1	.080

R8 - SERIES

R8-7

EMERGENCY STOPPING ONLY

AREA (SQ. FT)	SIZE (INCHES)	CONN. D.O.T. #	POSTS	ALUM. THK.
13.50	54X36	31-0667	2	.100

R9 - SERIES

HITCHHIKING PROHIBITED DO NOT STOP

AREA (SQ. FT)	SIZE (INCHES)	CONN. D.O.T. #	POSTS	ALUM. THK.
27.50	66X60	31-1733	2B	.125

R10 - SERIES

R10-6

STOP HERE ON RED 31-0801

STOP HERE ON RED 31-0802

AREA (SQ. FT)	SIZE (INCHES)	CONN. D.O.T. #	POSTS	ALUM. THK.
6.00	24X36		1	.080

NO TURN ON RED

OVERHEAD MOUNTED

AREA (SQ. FT)	SIZE (INCHES)	CONN. D.O.T. #	POSTS	ALUM. THK.
2.25	18X18	31-0817		.080
4.00	24X24	31-0823		.080
9.00	36X36	31-0816		.080

RIGHT TURN ON RED FROM RIGHT LANE ONLY

AREA (SQ. FT)	SIZE (INCHES)	CONN. D.O.T. #	POSTS	ALUM. THK.
7.50	30X36	31-0847	1	.080
20.00	48X60	31-0849	2	.100

DO NOT BLOCK DRIVEWAY

AREA (SQ. FT)	SIZE (INCHES)	CONN. D.O.T. #	POSTS	ALUM. THK.
5.00	24X30	31-0803	1	.080
12.00	36X48	31-0804	2	.100

R10-10L

LEFT TURN SIGNAL

AREA (SQ. FT)	SIZE (INCHES)	CONN. D.O.T. #	POSTS	ALUM. THK.
2.25	18X18	31-0841	1	.080
5.00	24X24	31-0842	1	.080

DO NOT BLOCK INTERSECTION

AREA (SQ. FT)	SIZE (INCHES)	CONN. D.O.T. #	POSTS	ALUM. THK.
5.00	24X30	31-0806	1	.080
12.00	36X48	31-0807	2	.100

R10-11a

NO TURN ON RED

AREA (SQ. FT)	SIZE (INCHES)	CONN. D.O.T. #	POSTS	ALUM. THK.
3.00	18X24	31-0818	1	.080
5.00	24X30	31-0824	1	.080
7.50	30X36	31-0830	1	.080
12.00	36X48	31-0819	2	.100

R11 - SERIES

R11-1

KEEP OFF MEDIAN

AREA (SQ. FT)	SIZE (INCHES)	CONN. D.O.T. #	POSTS	ALUM. THK.
5.00	24X30	31-1915	1	.080
20.00	48X60	31-1918	2	.100

NOTES:

FOR METRIC SEE CONVERSION CHART.

1. THE LEGEND "O.S.T.A." SHALL APPEAR ON ALL R- SERIES SIGNS EXCEPT WHEN SUFFIXED WITH THE LETTER "Z".
2. FOR SPECIFIC SIGN DESIGN CONTACT CONN. D.O.T., DIVISION OF TRAFFIC ENGINEERING. FOR BOLT HOLE PATTERN REFER TO FHWA PUBLICATION "STANDARD HIGHWAY SIGNS". SIGNS OF DIFFERENT DIMENSIONS TO BE ERECTED ON THE SAME POSTS, OR SPAN/MAST ARM MOUNTED, MAY REQUIRE SPECIAL BOLT HOLE PATTERNS.
3. POSTS - SEE TYP. SHEET (SHT #9) - "TYPICAL METAL SIGN POSTS AND SIGN MOUNTING DETAILS."
4. POSTS - TYPE A (EXCEPT WHERE NOTED WITH A "B" FOR TYPE B)
5. FOR OVERHEAD MOUNTED SIGNS, SEE TYPICAL SIGNAL SHEET - "MISC. TRAFFIC SIGNAL INSTALLATION DETAILS."
6. SIGNS SHALL BE FABRICATED OF ONE CONTINUOUS PIECE OF SHEET ALUMINUM. SPLICING OF SHEET ALUMINUM WILL NOT BE ACCEPTED.
7. BACKGROUND SHEETING SHALL BE TYPE III RETROREFLECTIVE SHEETING, EXCEPT NOTED BY *.

COLORS:

R-SERIES
BACKGROUND - WHITE (SILVER) - EXCEPT AS NOTED.
LEGEND - BLACK - EXCEPT AS NOTED.
ALL COLORS SHALL BE RETROREFLECTIVE WITH THE EXCEPTION OF BLACK WHICH SHALL BE OPAQUE.
* SIGNS TO BE "BRIGHT WIDE ANGLE RETROREFLECTIVE SHEETING".

REV.	DATE	REVISION DESCRIPTION
3	6-2012	REVISED NOTE #1 TO REFERENCE "O.S.T.A."
2	6-2010	INCLUDED SIGNS TO MEET 2009 MUTCD REQUIREMENTS.
1	1-2010	REVISED SHEETING FROM TYPE I TO III.

METRIC CONVERSION CHART (1" = 25mm)

ENGLISH	METRIC	ENGLISH	METRIC	ENGLISH	METRIC
12"	300	42"	1050	72"	1800
18"	450	48"	1200	78"	1950
24"	600	54"	1350	84"	2100
30"	750	60"	1500	90"	2250
36"	900	66"	1650	96"	2400

DESIGNER/DRAFTER: D. K. SWINBURNE
CHECKED BY: L.N. CONROY
Plotted: 2/22/2014

STATE OF CONNECTICUT
DEPARTMENT OF TRANSPORTATION

Filename: CTDOT_TRAFFIC_GD.dgn

SIGNATURE/BLOCK:
OFFICE OF ENGINEERING
APPROVED BY: DATE:

PROJECT TITLE:

TOWN:

DRAWING TITLE:
SIGN FACE SHEET ALUMINUM R-SERIES SIGNS TYPICAL DETAILS

PROJECT NO.

DRAWING NO. GS-1

SHEET NO.

SVIGALS + PARTNERS
84 Orange Street + New Haven, Connecticut
203.786.5110 + www.svigals.com

Tighe&Bond
www.tighebond.com
1000 Bridgeport Avenue
Suite 320
Shelton, CT 06484
(203) 712-1100

REVISION LOG:

No.	Description	Date

PROJECT NAME:
ENGINEERING & SCIENCE UNIVERSITY MAGNET SCHOOL

500 BOSTON POST ROAD
WEST HAVEN, CONNECTICUT 06516

PHASE:
CONSTRUCTION DOCUMENTS
PHASE 2 OF 3

DRAWING TITLE:
SHEET SIGN FACE ALUMINUM R SERIES SIGNS TYPICAL DETAILS

SCALE:

DATE: JULY 11, 2013

JOB NUMBER: S1732

SDE NUMBER: 093-0357 MAG/N

DRAWING NUMBER:
TR10.00

Jun 18, 2014-11:42am Plotted By: rmc
Tighe & Bond, Inc. J:\S\S1732 Svigals ES\DMS\DRAWINGS\0_Current\Drawings\TS-S1732-01.dwg

7/18/2013 5:53:25 PM

S - SERIES

S1-1

AREA (SQ. FT)	SIZE (INCHES)	CONN. D.O.T. #	POSTS	ALUM. THK.
6.75	36	*41-2112	1	.080
12.00	48	*41-2113	2	.100

W1 - SERIES

W1-1L

AREA (SQ. FT)	SIZE (INCHES)	CONN. D.O.T. #	POSTS	ALUM. THK.
6.25	30	41-4006	1	.080
9.00	36	41-4031	1	.080
16.00	48	41-4056	2	.100

W1-1R

AREA (SQ. FT)	SIZE (INCHES)	CONN. D.O.T. #	POSTS	ALUM. THK.
6.25	30	41-4005	1	.080
9.00	36	41-4160	1	.080
16.00	48	41-4055	2	.100

AREA (SQ. FT)	SIZE (INCHES)	CONN. D.O.T. #	POSTS	ALUM. THK.
9.00	36	41-4141	1	.080
16.00	48	41-4062	2	.100

AREA (SQ. FT)	SIZE (INCHES)	CONN. D.O.T. #	POSTS	ALUM. THK.
9.00	36	41-4140	1	.080
16.00	48	41-4061	2	.100

AREA (SQ. FT)	SIZE (INCHES)	CONN. D.O.T. #	POSTS	ALUM. THK.
6.25	30	41-4028	1	.080
9.00	36	41-4084	1	.080
16.00	48	41-4068	2	.100

W1-2

AREA (SQ. FT)	SIZE (INCHES)	CONN. D.O.T. #	POSTS	ALUM. THK.
6.25	30	41-4027	1	.080
9.00	36	41-4083	1	.080
16.00	48	41-4067	2	.100

AREA (SQ. FT)	SIZE (INCHES)	CONN. D.O.T. #	POSTS	ALUM. THK.
9.0	36	41-4139	1	.080
16.00	48	41-4088	2	.100

AREA (SQ. FT)	SIZE (INCHES)	CONN. D.O.T. #	POSTS	ALUM. THK.
9.0	36	41-4040	1	.080
16.00	48	41-4087	2	.100

AREA (SQ. FT)	SIZE (INCHES)	CONN. D.O.T. #	POSTS	ALUM. THK.
9.00	36	41-4128	1	.080
16.00	48	41-4058	2	.100

AREA (SQ. FT)	SIZE (INCHES)	CONN. D.O.T. #	POSTS	ALUM. THK.
9.00	36	41-4127	1	.080
16.00	48	41-4057	2	.100

W1-6 (LEFT OR RIGHT)

AREA (SQ. FT)	SIZE (INCHES)	CONN. D.O.T. #	POSTS	ALUM. THK.
8.00	48X24	41-4222	2	.100
12.50	60X30	41-4224	2	.100

W1-7

AREA (SQ. FT)	SIZE (INCHES)	CONN. D.O.T. #	POSTS	ALUM. THK.
8.00	48X24	41-4207	2	.100
12.50	60X30	41-4208	2	.100

W1-10L

AREA (SQ. FT)	SIZE (INCHES)	CONN. D.O.T. #	POSTS	ALUM. THK.
9.00	36	41-4085	1	.080
16.00	48	41-4090	2	.100

W1-10R

AREA (SQ. FT)	SIZE (INCHES)	CONN. D.O.T. #	POSTS	ALUM. THK.
9.0	36	41-4043	1	.080
16.00	48	41-4089	2	.100

W1-8 (LEFT OR RIGHT)

AREA (SQ. FT)	SIZE (INCHES)	CONN. D.O.T. #	POSTS	ALUM. THK.
3.00	18X24	41-4250	1	.080
5.00	24X30	41-4203	1	.080
7.50	30X36	41-4204	1	.080
12.00	36X48	41-4251	2	.080

W2 - SERIES

W2-1

AREA (SQ. FT)	SIZE (INCHES)	CONN. D.O.T. #	POSTS	ALUM. THK.
6.25	30	41-4226	1	.080
9.00	36	41-4236	1	.080
16.00	48	41-4246	2	.100

W2-2 (LEFT OR RIGHT)

AREA (SQ. FT)	SIZE (INCHES)	CONN. D.O.T. #	POSTS	ALUM. THK.
6.25	30	41-4225	1	.080
9.00	36	41-4235	1	.080
16.00	48	41-4245	2	.100

W2-3 (L) (R)

AREA (SQ. FT)	SIZE (INCHES)	CONN. D.O.T. #	POSTS	ALUM. THK.
6.25	30	41-4220L	1	.080
6.25	30	41-4219R	1	.080
9.00	36	41-4253L	1	.080
9.00	36	41-4252R	1	.080
16.00	48	41-4244L	2	.100
16.00	48	41-4243R	2	.100

W2-4

AREA (SQ. FT)	SIZE (INCHES)	CONN. D.O.T. #	POSTS	ALUM. THK.
6.25	30	41-4217	1	.080
9.00	36	41-4255	1	.080
16.00	48	41-4247	2	.100

W3 - SERIES

W3-1 OCTAGON - RED

AREA (SQ. FT)	SIZE (INCHES)	CONN. D.O.T. #	POSTS	ALUM. THK.
6.25	30	41-0501	1	.080
9.00	36	41-0502	1	.080
16.00	48	41-0503	2	.100

W3-2 TRIANGLE - RED & WHITE

AREA (SQ. FT)	SIZE (INCHES)	CONN. D.O.T. #	POSTS	ALUM. THK.
6.25	30	41-0504	1	.080
9.00	36	41-0505	2	.100
16.00	48	41-0506	2	.100

W3-3 SYMBOL & LEGEND - BLACK
BACKGROUND - YELLOW
TOP CIRCLE - RED
BOTTOM CIRCLE - GREEN

AREA (SQ. FT)	SIZE (INCHES)	CONN. D.O.T. #	POSTS	ALUM. THK.
6.25	30	41-0835	1	.080
9.00	36	41-0836	1	.080
16.00	48	41-0848	2	.100
24.00	60	41-0860	2	.125

WHEN FLASHING STOP AHEAD

W/ FLASHERS

AREA (SQ. FT)	SIZE (INCHES)	CONN. D.O.T. #	POSTS	ALUM. THK.
25.00	60	41-0534	2B	.125

W4 - SERIES

W4-1L

AREA (SQ. FT)	SIZE (INCHES)	CONN. D.O.T. #	POSTS	ALUM. THK.
9.00	36	41-4448	1	.080
16.00	48	41-4452	2	.100

W4-1R

AREA (SQ. FT)	SIZE (INCHES)	CONN. D.O.T. #	POSTS	ALUM. THK.
9.00	36	41-4449	1	.080
16.00	48	41-4459	2	.100

W4-2L

AREA (SQ. FT)	SIZE (INCHES)	CONN. D.O.T. #	POSTS	ALUM. THK.
9.00	36	41-4442	1	.080
16.00	48	41-4446	2	.100

W4-2R

AREA (SQ. FT)	SIZE (INCHES)	CONN. D.O.T. #	POSTS	ALUM. THK.
9.00	36	41-4441	1	.080
16.00	48	41-4447	2	.100

W4-3L

AREA (SQ. FT)	SIZE (INCHES)	CONN. D.O.T. #	POSTS	ALUM. THK.
6.25	30	41-4433	1	.080
9.00	36	41-4468	1	.080
16.00	48	41-4435	2	.100

W4-3R

AREA (SQ. FT)	SIZE (INCHES)	CONN. D.O.T. #	POSTS	ALUM. THK.
6.25	30	41-4432	1	.080
9.00	36	41-4470	1	.080
16.00	48	41-4434	2	.100

W5 - SERIES

W5-1 ROAD NARROWS

AREA (SQ. FT)	SIZE (INCHES)	CONN. D.O.T. #	POSTS	ALUM. THK.
9.00	36	41-4402	1	.080
16.00	48	41-4404	2	.100

W6 - SERIES

W6-1 W6-2

AREA (SQ. FT)	SIZE (INCHES)	CONN. D.O.T. #	POSTS	ALUM. THK.
6.25	30	41-4333	1	.080
9.00	36	41-4335	1	.080
16.00	48	41-4330	2	.100

W6-3

AREA (SQ. FT)	SIZE (INCHES)	CONN. D.O.T. #	POSTS	ALUM. THK.
9.00	36	41-4329	1	.080
16.00	48	41-4331	2	.100

W7 - SERIES

W7-1

AREA (SQ. FT)	SIZE (INCHES)	CONN. D.O.T. #	POSTS	ALUM. THK.
6.25	30	41-4506	1	.080
9.00	36	41-4530	1	.080
16.00	48	41-4508	2	.100

W8 - SERIES

W8-5

AREA (SQ. FT)	SIZE (INCHES)	CONN. D.O.T. #	POSTS	ALUM. THK.
6.25	30	41-4519	1	.080
9.00	36	41-4520	1	.080
16.00	48	41-4521	2	.100

W9 - SERIES

W9-1 LEFT LANE ENDS (L) RIGHT LANE ENDS (R)

AREA (SQ. FT)	SIZE (INCHES)	CONN. D.O.T. #	POSTS	ALUM. THK.
9.00	36	41-4443L	1	.080
9.00	36	41-4440R	1	.080
16.00	48	41-4444L	2	.100
16.00	48	41-4445R	2	.100

W9-2 LANE ENDS MERGE LEFT (L) LANE ENDS MERGE RIGHT (R)

AREA (SQ. FT)	SIZE (INCHES)	CONN. D.O.T. #	POSTS	ALUM. THK.
9.00	36	41-4454L	1	.080
9.00	36	41-4453R	1	.080
16.00	48	41-4456L	2	.100
16.00	48	41-4455R	2	.100

SLOW VEHICLE LANE ENDS

AREA (SQ. FT)	SIZE (INCHES)	CONN. D.O.T. #	POSTS	ALUM. THK.
22.00	66X48	41-1510	2	.100

W10 - SERIES

W10-1 R R

AREA (SQ. FT)	SIZE (INCHES)	CONN. D.O.T. #	POSTS	ALUM. THK.
7.07	36	41-2201	1	.080

W11 - SERIES

W11-2

AREA (SQ. FT)	SIZE (INCHES)	CONN. D.O.T. #	POSTS	ALUM. THK.
6.25	30	41-4810	1	.080
9.00	36	41-4811	1	.080
16.00	48	41-4812	2	.100

W11-8

AREA (SQ. FT)	SIZE (INCHES)	CONN. D.O.T. #	POSTS	ALUM. THK.
6.25	30	41-4680	1	.080
9.00	36	41-4681	1	.080
16.00	48	41-4692	2	.100

W12 - SERIES

W12-1

AREA (SQ. FT)	SIZE (INCHES)	CONN. D.O.T. #	POSTS	ALUM. THK.
6.25	30	41-4213	1	.080
9.00	36	41-4215	1	.080
16.00	48	41-4214	2	.100

LEFT LANE (SUBPLATE)

AREA (SQ. FT)	SIZE (INCHES)	CONN. D.O.T. #	POSTS	ALUM. THK.
7.50	36X30	41-4729		.080

W12-2 00'-0"

AREA (SQ. FT)	SIZE (INCHES)	CONN. D.O.T. #	POSTS	ALUM. THK.
9.00	36	41-4706	1	.080
16.00	48	41-4708	2	.100

RIGHT LANE (SUBPLATE)

AREA (SQ. FT)	SIZE (INCHES)	CONN. D.O.T. #	POSTS	ALUM. THK.
7.50	36X30	41-4728		.080

W13 - SERIES

W13-1 00 M.P.H.

AREA (SQ. FT)	SIZE (INCHES)	CONN. D.O.T. #	POSTS	ALUM. THK.
2.25	18X18	41-5568	1	.080
4.00	24X24	41-5569	1	.080
6.25	30X30	41-5573	1	.080
16.00	48X48	41-5572	2	.100

W13-2 EXIT 00 M.P.H.

AREA (SQ. FT)	SIZE (INCHES)	CONN. D.O.T. #	POSTS	ALUM. THK.
20.00	48X60	41-5596	2	.100

W13-3 RAMP 00 M.P.H.

AREA (SQ. FT)	SIZE (INCHES)	CONN. D.O.T. #	POSTS	ALUM. THK.
20.00	48X60	41-5598	2B	.100

W16 - SERIES

W16-2aP 41-6130 000 FT
41-6132 000 FT
41-6134 0000 FT
(SUBPLATE) USE AT ADVANCE SIGN LOCATION

AREA (SQ. FT)	SIZE (INCHES)	CONN. D.O.T. #	POSTS	ALUM. THK.
2.00	24X12	41-6130		.080
3.75	30X18	41-6132		.080
7.00	42X24	41-6134		.100
2.0	24X12	*41-6140		.080
3.75	30X18	*41-6142		.080

W16-7PL (SUBPLATE) USE WITH S1-1 & W11-2 AT CROSSWALK

AREA (SQ. FT)	SIZE (INCHES)	CONN. D.O.T. #	POSTS	ALUM. THK.
2.00	24X12	41-2607		.080
3.75	30X18	41-2608		.080
2.00	24X12	*41-2617		.080
3.75	30X18	*41-2618		.080

W16-7PR (SUBPLATE) USE WITH S1-1 & W11-2 AT CROSSWALK

AREA (SQ. FT)	SIZE (INCHES)	CONN. D.O.T. #	POSTS	ALUM. THK.
2.00	24X12	41-2609		.080
3.75	30X18	41-2610		.080
2.00	24X12	*41-2619		.080
3.75	30X18	*41-2620		.080

W16-9P AHEAD

AREA (SQ. FT)	SIZE (INCHES)	CONN. D.O.T. #	POSTS	ALUM. THK.
2.00	24X12	41-6125	1	.080
3.75	30X18	41-6112	1	.080
6.00	36X24	41-6116	1	.080
12.00	48X36	41-6115	2	.100

W16-9P AHEAD

AREA (SQ. FT)	SIZE (INCHES)	CONN. D.O.T. #	POSTS	ALUM. THK.
2.00	24X12	*41-6126	1	.080
3.75	30X18	*41-6137	1	.080
6.00	36X24	*41-6138	1	.080
12.00	48X36	*41-6139	2	.100

NOTES:

FOR METRIC SEE CONVERSION CHART.

1. FOR SPECIFIC SIGN DESIGN CONTACT CONN. D.O.T., DIVISION OF TRAFFIC ENGINEERING.
   FOR BOLT HOLE PATTERN REFER TO FHWA PUBLICATION "STANDARD HIGHWAY SIGNS".
   SIGNS OF DIFFERENT DIMENSIONS TO BE ERECTED ON THE SAME POSTS, OR SPAN/MAST ARM MOUNTED, MAY REQUIRE SPECIAL BOLT HOLE PATTERNS.
2. POSTS - SEE STANDARD SHEET TR-1208_02 "METAL SIGN POSTS AND SIGN MOUNTING DETAILS."
3. POSTS - TYPE A (EXCEPT WHERE NOTED WITH A "B" FOR TYPE B)
4. SIGNS SHALL BE FABRICATED OF ONE CONTINUOUS PIECE OF SHEET ALUMINUM.
   SPLICING OF SHEET ALUMINUM WILL NOT BE ACCEPTED.

COLORS:

S & W-SERIES
BACKGROUND - YELLOW - EXCEPT AS NOTED.
* BACKGROUND - FLUORESCENT YELLOW GREEN
LEGEND - BLACK - EXCEPT AS NOTED.
ALL COLORS SHALL BE TYPE III RETROREFLECTIVE WITH THE EXCEPTION OF BLACK WHICH SHALL BE OPAQUE.

REV.	DATE	REVISION DESCRIPTION
1	11-2013	UPDATED PER MUTCD.
1	1-2010	REVISED SHEETING FROM TYPE I TO III.

METRIC CONVERSION CHART (1" = 25mm)

ENGLISH	METRIC	ENGLISH	METRIC	ENGLISH	METRIC
12"	300	42"	1050	72"	1800
18"	450	48"	1200	78"	1950
24"	600	54"	1350	84"	2100
30"	750	60"	1500	90"	2250
36"	900	66"	1650	96"	2400

DESIGNER/DRAFTER: D.K. SWINBURNE
CHECKED BY: L.N. CONROY
Plotted: 3/17/2014

STATE OF CONNECTICUT
DEPARTMENT OF TRANSPORTATION

Filename: CTDOT_TRAFFIC_GD.dgn

SIGNATURE/BLOCK:
OFFICE OF ENGINEERING
APPROVED BY: DATE:

PROJECT TITLE:

TOWN:

DRAWING TITLE: SIGN FACE SHEET ALUMINUM S&W SERIES SIGNS TYPICAL DETAILS

PROJECT NO.
DRAWING NO. GS-2
SHEET NO.

SVIGALS + PARTNERS
84 Orange Street + New Haven, Connecticut
203.786.5110 + www.svigals.com

Tighe&Bond
www.tighebond.com
1000 Bridgeport Avenue
Suite 320
Shelton, CT 06484
(203) 712-1100

REVISION LOG:

No.	Description	Date

PROJECT NAME:
ENGINEERING & SCIENCE UNIVERSITY MAGNET SCHOOL

500 BOSTON POST ROAD
WEST HAVEN, CONNECTICUT 06516

PHASE:
CONSTRUCTION DOCUMENTS
PHASE 2 OF 3

DRAWING TITLE:
SHEET SIGN FACE ALUMINUM S&W SERIES SIGNS TYPICAL DETAILS

SCALE: AS NOTED
DATE: JULY 11, 2013
JOB NUMBER: S1732
SDE NUMBER: 093-0357 MAG/N
DRAWING NUMBER:

TR10.01

7/18/2013 5:53:25 PM

Jan 18, 2014-11:42am Plotted By: rmr
Tighe & Bond, Inc. J:\S\S1732 Svigals ESUMS\DRAWINGS\0_Current\Drawings\TR-S1732-01.dwg

D1 - SERIES

D1-1 51-5202 (VARIABLE) →

D1-2 51-5203 (VARIABLE) (VARIABLE) →

VARIABLE LEGEND & ARROW DIRECTION

AREA (SQ. FT)	SIZE (INCHES)	CONN. D.O.T. #	POSTS	ALUM. THK.
4.17	60X10	51-5202	2	.100
8.33	60X20	51-5203	2	.100

D2 - SERIES

D2-1 51-5222 (VARIABLE) 00

D2-2 51-5223 (VARIABLE) (VARIABLE) 00

VARIABLE LEGEND & MILEAGE

AREA (SQ. FT)	SIZE (INCHES)	CONN. D.O.T. #	POSTS	ALUM. THK.
4.17	60X10	51-5222	2	.100
8.33	60X20	51-5223	2	.100

D3 - SERIES

(VARIABLE ROAD NAME)

AREA (SQ. FT)	SIZE (INCHES)	CONN. D.O.T. #	POSTS	ALUM. THK.
4.00	48X12	51-2010	2	.100
5.00	60X12	51-2011	2	.100
6.00	72X12	51-2012	2	.100
7.00	84X12	51-2013	2	.100

D4 - SERIES

PARK & RIDE

AREA (SQ. FT)	SIZE (INCHES)	CONN. D.O.T. #	POSTS	ALUM. THK.
5.00	24X30	51-6001	1	.080

PARK & RIDE 51-6002

PARK & RIDE 51-6003

AREA (SQ. FT)	SIZE (INCHES)	CONN. D.O.T. #	POSTS	ALUM. THK.
5.00	24X30	51-6002	1	.080
5.00	24X30	51-6003	1	.080

51-2666 51-2646 L or R

51-2645

AREA (SQ. FT)	SIZE (INCHES)	CONN. D.O.T. #	POSTS	ALUM. THK.
0.75	12X9	51-2666		.080
2.19	21X15	51-2646		.080
2.19	21X15	51-2645		.080

51-2650

51-2651

AREA (SQ. FT)	SIZE (INCHES)	CONN. D.O.T. #	POSTS	ALUM. THK.
2.19	21X15	51-2650		.080
2.19	21X15	51-2651		.080

NOTICE THIS PARKING AREA PATROLLED

LEGEND - BLACK BACKGROUND - WHITE

AREA (SQ. FT)	SIZE (INCHES)	CONN. D.O.T. #	POSTS	ALUM. THK.
15.00	60X36	51-5937	2	.100

PARK AT YOUR OWN RISK REMOVE KEYS AND LOCK CAR NOT RESPONSIBLE FOR PROPERTY LOST OR STOLEN

LEGEND - BLACK BACKGROUND - WHITE

AREA (SQ. FT)	SIZE (INCHES)	CONN. D.O.T. #	POSTS	ALUM. THK.
4.50	36X18	51-6037	1	.080

D5 - SERIES

D5-2b REST AREA ↗

LEGEND - WHITE BACKGROUND - BLUE

AREA (SQ. FT)	SIZE (INCHES)	CONN. D.O.T. #	POSTS	ALUM. THK.
42.25	78	51-6901	2B	.125

SERVICE AREA ↗

LEGEND - WHITE BACKGROUND - BLUE

AREA (SQ. FT)	SIZE (INCHES)	CONN. D.O.T. #	POSTS	ALUM. THK.
35.00	84X60	51-6158	2B	.125

D7 - SERIES

D-7 51-6802 (VARIABLE) →

51-6803 (VARIABLE) (VARIABLE) →

W or W/O ARROW VARIABLE ARROW DIRECTION

AREA (SQ. FT)	SIZE (INCHES)	CONN. D.O.T. #	POSTS	ALUM. THK.
4.17	60X10	51-6802	2	.100
8.33	60X20	51-6803	2	.100

D9 - SERIES

D9-2 H

** FOR ARROW SUBPLATES USE M5 & M6 SERIES

AREA (SQ. FT)	SIZE (INCHES)	CONN. D.O.T. #	POSTS	ALUM. THK.
4.00	24	51-6788	1	.080

D9-3a

** FOR ARROW SUBPLATES USE M5 & M6 SERIES

AREA (SQ. FT)	SIZE (INCHES)	CONN. D.O.T. #	POSTS	ALUM. THK.
4.00	24	51-6762	1	.080

51-6705 DIESEL →
51-6706 FOOD →
51-6707 PHONE →
51-6708 GAS →
51-6709 LODGING →

VARIABLE ARROW DIRECTION

AREA (SQ. FT)	SIZE (INCHES)	CONN. D.O.T. #	POSTS	ALUM. THK.
2.25	36X9		1	.080

D10 - SERIES

D10-1 MILE 0

D10-2 MILE 0 0

D10-3 MILE 0 0 0 0

AREA (SQ. FT)	SIZE (INCHES)	CONN. D.O.T. #	POSTS	ALUM. THK.
2.00	12X24	51-5291	1	.080
3.00	12X36	51-5292	1	.080
4.00	12X48	51-5293	1	.080

N 0 .0 N 0 0 .0 N 0 0 0 .0

CARDINAL DIRECTION VARIABLE - N, S, E, W

AREA (SQ. FT)	SIZE (INCHES)	CONN. D.O.T. #	POSTS	ALUM. THK.
1.88	10X27	51-5300	1	.080
2.49	10X36	51-5301	1	.080
3.33	10X48	51-5302	1	.080

NORTH 95 MILE 000

CARDINAL DIRECTION, SHIELD AND NUMERALS ARE VARIABLE

AREA (SQ. FT)	SIZE (INCHES)	CONN. D.O.T. #	POSTS	ALUM. THK.
6.75	18X54	51-5307	1	.080

RECREATIONAL RW- SERIES

RW-080

AREA (SQ. FT)	SIZE (INCHES)	CONN. D.O.T. #	POSTS	ALUM. THK.
4.00	24	51-6873	1	.080

51-2705 51-2706 L or R

AREA (SQ. FT)	SIZE (INCHES)	CONN. D.O.T. #	POSTS	ALUM. THK.
2.19	21X15	51-2705		.080
2.19	21X15	51-2706		.080

E5 - SERIES

E5-1a EXIT (L) EXIT (R)

FOR USE AT "NO NUMBERED" EXITS

AREA (SQ. FT)	SIZE (INCHES)	CONN. D.O.T. # (L or R)	POSTS	ALUM. THK.
30.00	72X60	51-6150	2B	.125

E5-1a EXIT 00 (L) EXIT 00 (R)

AREA (SQ. FT)	SIZE (INCHES)	CONN. D.O.T. # (L or R)	POSTS	ALUM. THK.
30.00	72X60	51-6152	2B	.125
37.50	90X60	51-6153	2B	.125
47.50	114X60	51-6154	2B	.125

I - SERIES

(VARIABLE) RIVER

VARIABLE: RIVER, BROOK, CREEK

AREA (SQ. FT)	SIZE (INCHES)	CONN. D.O.T. #	POSTS	ALUM. THK.
1.50	18X12	51-2009	1	.080
12.00	48X36	51-2051	2	.100

(TOWN NAME) (INCORPORATED OR SETTLED) (DATE) TOWN LINE

VARIABLE: TOWN / CITY

AREA (SQ. FT)	SIZE (INCHES)	CONN. D.O.T. #	POSTS	ALUM. THK.
7.50	40X27	51-2020	2	.080

(NAME) Connecticut

AREA (SQ. FT)	SIZE (INCHES)	CONN. D.O.T. #	POSTS	ALUM. THK.
10.00	48X30	51-2040	2	.100

AREA (SQ. FT)	SIZE (INCHES)	CONN. D.O.T. #	POSTS	ALUM. THK.
6.25	30X30	51-1344		.080

M1 - SERIES

M1-1 INTERSTATE CONNECTICUT 00

VARIABLE: 1, 2 or 3 DIGITS
LEGEND - WHITE
BACKGROUND - RED & BLUE

AREA (SQ. FT)	SIZE (INCHES)	CONN. D.O.T. #	POSTS	ALUM. THK.
3.20	24X24	51-6662	1	.080
3.99	30X24	51-6663	1	.080
7.20	36X36	51-6666	2	.080
8.99	45X36	51-6667	2	.100

M1-4 00

VARIABLE: 1, 2 or 3 DIGITS
LEGEND - BLACK
BACKGROUND - WHITE

AREA (SQ. FT)	SIZE (INCHES)	CONN. D.O.T. #	POSTS	ALUM. THK.
4.00	24X24	51-6615	1	.080
9.00	36X36	51-6635	2	.080

M1-5 00

VARIABLE: 1, 2 or 3 DIGITS
LEGEND - BLACK
BACKGROUND - WHITE

AREA (SQ. FT)	SIZE (INCHES)	CONN. D.O.T. #	POSTS	ALUM. THK.
4.00	24X24	51-6616	1	.080
9.00	36X36	51-6636	2	.080

M2 - SERIES

M2-1 JCT

AREA (SQ. FT)	SIZE (INCHES)	CONN. D.O.T. #	COLOR	ALUM. THK.
2.19	21X15	51-6640	(1)	.080
2.19	21X15	51-6610	(2)	.080

M3 - SERIES

M3-1 NORTH

AREA (SQ. FT)	SIZE (INCHES)	CONN. D.O.T. #	COLOR	ALUM. THK.
2.00	24X12	51-6651	(1)	.080
2.00	24X12	51-6611	(2)	.080
3.12	30X15	51-6671	(1)	.080
3.12	30X15	51-6631	(2)	.080

M3-2 EAST

AREA (SQ. FT)	SIZE (INCHES)	CONN. D.O.T. #	COLOR	ALUM. THK.
2.00	24X12	51-6652	(1)	.080
2.00	24X12	51-6612	(2)	.080
3.12	30X15	51-6672	(1)	.080
3.12	30X15	51-6632	(2)	.080

M3-3 SOUTH

AREA (SQ. FT)	SIZE (INCHES)	CONN. D.O.T. #	COLOR	ALUM. THK.
2.00	24X12	51-6653	(1)	.080
2.00	24X12	51-6613	(2)	.080
3.12	30X15	51-6673	(1)	.080
3.12	30X15	51-6633	(2)	.080

M3-4 WEST

AREA (SQ. FT)	SIZE (INCHES)	CONN. D.O.T. #	COLOR	ALUM. THK.
2.00	24X12	51-6654	(1)	.080
2.00	24X12	51-6614	(2)	.080
3.12	30X15	51-6674	(1)	.080
3.12	30X15	51-6634	(2)	.080

M4 - SERIES

M4-5 TO

AREA (SQ. FT)	SIZE (INCHES)	CONN. D.O.T. #	COLOR	ALUM. THK.
2.00	24X12	51-6650	(1)	.080
2.00	24X12	51-6620	(2)	.080

M5 - SERIES

M5-1 L or R

AREA (SQ. FT)	SIZE (INCHES)	CONN. D.O.T. #	COLOR	ALUM. THK.
2.19	21X15	51-2690L	(1)	.080
2.19	21X15	51-2691R	(1)	.080
2.19	21X15	51-2630L	(2)	.080
2.19	21X15	51-2631R	(2)	.080

M5-2 L or R

AREA (SQ. FT)	SIZE (INCHES)	CONN. D.O.T. #	COLOR	ALUM. THK.
2.19	21X15	51-2692L	(1)	.080
2.19	21X15	51-2693R	(1)	.080
2.19	21X15	51-2632L	(2)	.080
2.19	21X15	51-2633R	(2)	.080

M6 - SERIES

M6-1 L or R

AREA (SQ. FT)	SIZE (INCHES)	CONN. D.O.T. #	COLOR	ALUM. THK.
2.19	21X15	51-2686	(1)	.080
2.19	21X15	51-2626	(2)	.080

M6-4

AREA (SQ. FT)	SIZE (INCHES)	CONN. D.O.T. #	COLOR	ALUM. THK.
2.19	21X15	51-2697	(1)	.080
2.19	21X15	51-2627	(2)	.080

M6-2 L or R

AREA (SQ. FT)	SIZE (INCHES)	CONN. D.O.T. #	COLOR	ALUM. THK.
2.19	21X15	51-2688L	(1)	.080
2.19	21X15	51-2689R	(1)	.080
2.19	21X15	51-2628L	(2)	.080
2.19	21X15	51-2629R	(2)	.080
4.89	32X22	51-2609R	(2)	.080

M6-3

AREA (SQ. FT)	SIZE (INCHES)	CONN. D.O.T. #	COLOR	ALUM. THK.
2.19	21X15	51-2685	(1)	.080
2.19	21X15	51-2625	(2)	.080

SYMBOL - WHITE BACKGROUND - BLUE

AREA (SQ. FT)	SIZE (INCHES)	CONN. D.O.T. #	POSTS	ALUM. THK.
3.00	18X24	51-5943	1	.080

51-6504 (VARIABLE)

51-6505 (VARIABLE) (VARIABLE)

TO BE SUBMOUNTED W/ 51-5943
LEGEND - WHITE
BACKGROUND - BLUE

AREA (SQ. FT)	SIZE (INCHES)	CONN. D.O.T. #	POSTS	ALUM. THK.
0.75	18X6	51-6504	1	.080
1.50	18X12	51-6505	1	.080

NOTES:

FOR METRIC SEE CONVERSION CHART.

1. FOR SPECIFIC SIGN DESIGN CONTACT CONN. D.O.T., DIVISION OF TRAFFIC ENGINEERING. FOR BOLT HOLE PATTERN REFER TO FHWA PUBLICATION "STANDARD HIGHWAY SIGNS". SIGNS OF DIFFERENT DIMENSIONS TO BE ERECTED ON THE SAME POSTS, OR SPAN/MAST ARM MOUNTED, MAY REQUIRE SPECIAL BOLT HOLE PATTERNS.
2. POSTS - SEE TYP. SHEET (SHT #9) - "TYPICAL METAL SIGN POSTS AND SIGN MOUNTING DETAILS."
3. POSTS - TYPE A (EXCEPT WHERE NOTED WITH A "B" FOR TYPE B)
4. SIGNS SHALL BE FABRICATED OF ONE CONTINUOUS PIECE OF SHEET ALUMINUM. SPLICING OF SHEET ALUMINUM WILL NOT BE ACCEPTED.

COLORS:

D - SERIES
D1, 2, 3, 4, 10 BACKGROUND-GREEN, LEGEND-WHITE
D7, RW BACKGROUND-BROWN, LEGEND-WHITE
D9 BACKGROUND-BLUE, LEGEND-WHITE
ALL OTHER D-SERIES AS NOTED

E - SERIES
BACKGROUND-GREEN, LEGEND-WHITE

I - SERIES
BACKGROUND-GREEN, LEGEND-WHITE
(EXCEPT AS NOTED)

M2 - M6 SERIES
(1) BACKGROUND-BLUE, LEGEND-WHITE
(2) BACKGROUND-WHITE, LEGEND-BLACK

ALL COLORS SHALL BE TYPE III RETROREFLECTIVE WITH THE EXCEPTION OF BLACK WHICH SHALL BE OPAQUE.

REV.	DATE	REVISION DESCRIPTION
1	1-2010	REVISED SHEETING FROM TYPE I TO III.

METRIC CONVERSION CHART (1" = 25mm)

ENGLISH	METRIC	ENGLISH	METRIC	ENGLISH	METRIC
12"	300	42"	1050	72"	1800
18"	450	48"	1200	78"	1950
24"	600	54"	1350	84"	2100
30"	750	60"	1500	90"	2250
36"	900	66"	1650	96"	2400

DESIGNER/DRAFTER: D.K. SWINBURNE
CHECKED BY: L.N. CONROY
Plotted: 2/22/2014

STATE OF CONNECTICUT
DEPARTMENT OF TRANSPORTATION

Filename: CTDOT_TRAFFIC_GD.dgn

SIGNATURE/BLOCK:
OFFICE OF ENGINEERING
APPROVED BY: DATE:

PROJECT TITLE:

TOWN:

DRAWING TITLE: SIGN FACE SHEET ALUMINUM D,E,I,&M SERIES SIGNS TYPICAL DETAILS

PROJECT NO.

DRAWING NO. GS-3

SHEET NO.

SVIGALS + PARTNERS
84 Orange Street + New Haven, Connecticut
203.786.5110 + www.svigals.com

Tighe&Bond
www.tighebond.com
1000 Bridgeport Avenue
Suite 320
Shelton, CT 06484
(203) 712-1100

REVISION LOG:

No.	Description	Date

PROJECT NAME:
ENGINEERING & SCIENCE UNIVERSITY MAGNET SCHOOL

500 BOSTON POST ROAD
WEST HAVEN, CONNECTICUT 06516

PHASE:
CONSTRUCTION DOCUMENTS PHASE 2 OF 3

DRAWING TITLE:
SHEET SIGN FACE ALUMINUM D,E,I,& M SERIES SIGNS TYPICAL DETAILS

SCALE: AS NOTED

DATE: JULY 11, 2013

JOB NUMBER: S1732

SDE NUMBER: 093-0357 MAG/N

DRAWING NUMBER:

TR10.02

7/18/2013 5:53:25 PM

Jun 18, 2014-11:42am Plotted By: rmr
Tighe & Bond, Inc. J:\S\S1732 Svigals FS\MS\DRAWINGS\0_Current\Drawing\DS-S1732-01.dwg

DOCUMENT ALL LOOP DETECTOR VALUES BOTH CALCULATED AND MEASURED.

DEFINITIONS:

LOOP: #14 AWG WIRE IN SAWCUT, TERMINATED IN HANDHOLE, IMSA SPEC 51-7.
LEAD-IN: 14/2 SHIELDED TWISTED PAIR CABLE FROM HANDHOLE TO CONTROLLER, IMSA SPEC 50-2.
LOOP CIRCUIT: LOOP SAWCUT WIRE SPLICED TO 14/2 LEAD-IN CABLE.
AMPLIFIER: ELECTRONIC DEVICE CONNECTED TO LOOP CIRCUIT. SENSES CHANGE IN RESONANT FREQUENCY AND CREATES AN OUTPUT TO THE CONTROLLER.
MEGOHMETER: INSTRUMENT SPECIFICALLY DESIGNED TO TEST THE INSULATION RESISTANCE OF A CIRCUIT. COMMON MANUFACTURERS: AMEC®, AMPROBE®, FLUKE®, MEGGER®.

1: RESISTANCE:

1a: INSULATION RESISTANCE: PERFORM A 600 VOLT (MINIMUM) MEGOHMETER TEST ON LOOP CIRCUIT. THE LOOP AMPLIFIER MUST BE DISCONNECTED FROM THE LOOP CIRCUIT OR THE LOOP AMPLIFIER WILL BE DAMAGED. THE RESISTANCE OF THE LOOP WIRE TO GROUND MUST BE GREATER THAN 100 MEG OHMS.

1b: WIRE RESISTANCE: MEASURE THE DC RESISTANCE OF THE LOOP CIRCUIT. THE LOOP CIRCUIT MUST BE DISCONNECTED FROM THE AMPLIFIER. USING AN OHMMETER CONNECTED ACROSS THE LOOP CIRCUIT, MEASURE THE DC RESISTANCE OF THE CONDUCTORS. THE RESISTANCE SHOULD BE LESS THAN 4 OHMS.

NOTE: ALL TESTS SHALL BE DONE AT THE CONTROLLER ASSEMBLY (CA), HOWEVER IT IS RECOMMENDED TO PERFORM A PRELIMINARY MEGOHMETER TEST AT THE HANDHOLE PRIOR TO SEALING THE SAWCUT AND SPLICING TO THE LEAD-IN. IF A DEFECTIVE LOOP WIRE IS FOUND, IT MAY BE EASILY REPLACED.

2: LOOP CIRCUIT INDUCTANCE:

2a: CALCULATE INDUCTANCE OF LOOP (L_{LOOP}) AND LEAD-IN CABLE ($L_{14/2}$).

LOOP INDUCTANCE (ENGLISH)

$L_{LOOP} = (P/4)(N^2 + N)$

LEAD-IN INDUCTANCE

$L_{14/2} = (0.24\,\mu h/FT)(D)$

LOOP INDUCTANCE (METRIC)

$L_{LOOP} = (3.28P/4)(N^2 + N)$

LEAD-IN INDUCTANCE

$L_{14/2} = (0.78\,\mu h/m)(D)$

WHERE:

L_{LOOP} = INDUCTANCE OF INDIVIDUAL LOOP SEGMENTS IN MICROHENRIES (μh).
$L_{14/2}$ = INDUCTANCE OF LEAD-IN CABLE.
P = PERIMETER OF INDIVIDUAL LOOP SEGMENT, IN FEET OR METERS.
N = NUMBER OF TURNS.
D = LENGTH OF LEAD-IN CABLE FROM SPLICE IN HANDHOLE TO CONTROLLER, IN FEET OR METERS.
$L_T = L_1 + L_2 + L_3$ etc.,
(TOTAL INDUCTANCE OF SEGMENTED LOOP SPLICED IN SERIES.)
$L_T = 1 / [(1 / L_1) + (1 / L_2) + (1 / L_3) + \text{etc.}]$,
(TOTAL INDUCTANCE OF SEGMENTED LOOP SPLICED IN PARALLEL.

WHERE:

L_T = TOTAL INDUCTANCE OF THE SEGMENTED ARRANGEMENT.
L_1, L_2, L_3 = INDUCTANCE OF INDIVIDUAL LOOP SEGMENTS.

EXAMPLE: (IN ENGLISH)

6' x 6', 4 TURNS, APPROXIMATELY 300' FROM THE CONTROLLER

$L_{LOOP} = (24/4)(4^2 + 4)$
$L_{LOOP} = (6)(20)$
$L_{LOOP} = 120\,\mu h$

$L_{14/2} = (0.24\,\mu h/FT)(300)$
$L_{14/2} = (0.24)(300)$
$L_{14/2} = 72\,\mu h$

2b: MEASURE INDUCTANCE OF LOOP AND LEAD-IN AT CONTROLLER. USE INSTRUMENT DESIGNED TO MEASURE LOOP CIRCUIT INDUCTANCE.

3: POWER INTERRUPTION:

AFTER THE AMPLIFIER HAS TUNED AND IS OPERATING, DISCONNECT POWER BY REMOVING FUSE OR HARNESS CONNECTOR. RETURN POWER TO THE AMPLIFIER AND CONFIRM IT RE-TUNES AUTOMATICALLY WITHOUT ANY MANUAL ADJUSTMENTS.

INDUCTIVE LOOP TEST PROCEDURE

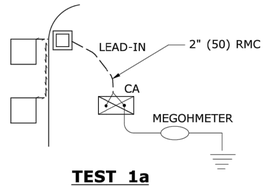

TEST 1a

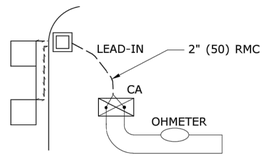

TEST 1b

PROJECT:
TOWN: LOCATION:

LOOP NUMBER	RESISTANCE OHMS		INDUCTANCE MICROHENRIES (µh)		AMPLIFIER POWER INTERRUPTION
	TO GROUND (1a)	LOOP WIRE (1b)	CALCULATED (2a)	MEASURED (2b)	PASS/FAIL (3)
D1 FRONT					
D1 REAR					
D2A					
D2B					
D4A FRONT					
D4B REAR					
D5					
D6A					
D6B					

LOOP CIRCUIT TEST DATA (EXAMPLE)

TEST PROCEDURE:

- INSERT ELECTRODE (C) A DISTANCE (D) FROM THE FOUNDATION. RECOMMEND A MINIMUM 50'.
- CONNECT A VOLTAGE SOURCE AND AMMETER BETWEEN THE FOUNDATION GROUND ROD (X) AND C.
- MEASURE THE CURRENT FLOW (I) BETWEEN X AND C.
- INSERT POTENTIAL ELECTRODE (P) AT 5' (1500) INTERVALS IN A STRAIGHT LINE TO ELECTRODE C.
- MEASURE VOLTAGE (E) AT EACH LOCATION OF P.
- CALCULATE RESISTANCE (R) AT EACH LOCATION OF P USING THE FORMULA R=E/I.
- PLOT THE VALUES ON A RxD GROUND RESISTANCE CHART.
- THE ACTUAL GROUND RESISTANCE IS WHERE THE PLOTTED CURVE IS RELATIVELY FLAT, USUALLY AT 62%± OF D. SEE EXAMPLE CHART: CURVE FLATTENS OUT AT 10 OHMS, APPROXIMATELY 30' (9000) FROM FOUNDATION.
- IF GROUND RESISTANCE IS GREATER THAN 10 OHMS, PERFORM CORRECTIVE ACTION AND RE-TEST.

SUGGESTED CORRECTIVE ACTION:

A. INSTALL ADDITIONAL 10' (3000) GROUND ROD(S).
REFER TO NESC SECTION 09, RULE 94.B.2.
DRIVE ADDITIONAL GROUND RODS NO CLOSER TO FOUNDATION THAN 6' (1800). IF MORE THAN ONE IS NEEDED, SPACE MINIMUM 6' (1800) APART.
BONDS TO ADDITIONAL GROUND ROD(S) SHALL BE MADE BY A CLAMP DESIGN FOR DIRECT BURIAL OR BY EXOTHERMIC WELDING TECHNIQUE.
TOP OF ADDITIONAL GROUND ROD(S) SHALL BE 6" (150) BELOW GRADE.

B. IN AREAS OF SHALLOW BEDROCK, INSTALL A GROUND GRID OR ARRAY CONSISTING OF BURIED WIRE, RODS, STRIPS OR PLATES.
REFER TO NESC SECTION 09, RULE 94.B.3.
REFER TO NEC SECTION 250.
MINIMUM DEPTH OF 18" (450).
GRID CONNECTIONS AND BONDS ON GROUND GRID SHALL BE MADE BY CLAMPS DESIGNED FOR DIRECT BURIAL OR BY EXOTHERMIC WELDING TECHNIQUE.

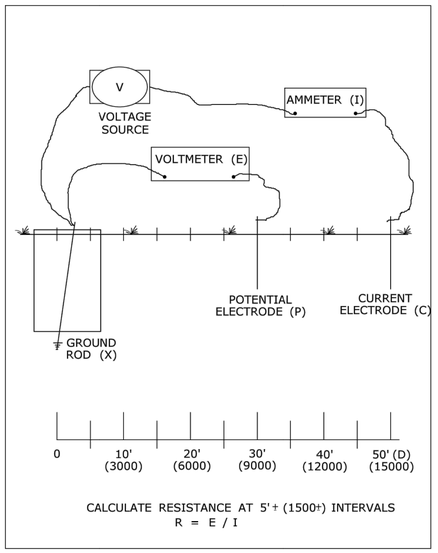

3 POINT GROUND RESISTANCE TEST CIRCUIT

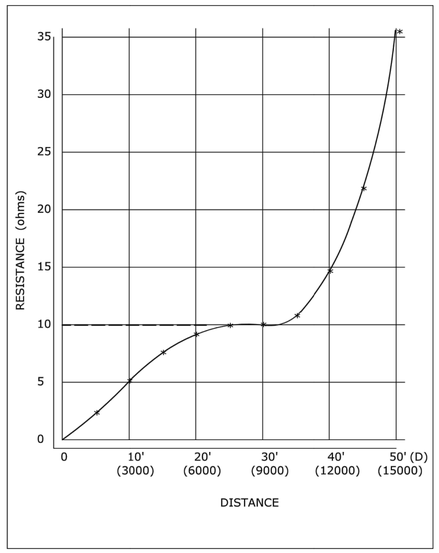

GROUND RESISTANCE CHART (EXAMPLE)

PIN	COLOR	FUNCTION
A	WHITE	110 VAC Neutral
B	BROWN	Output Relay Common (moving contact)
C	BLACK	110 VAC (Fused)
D	RED	Loop
E	ORANGE	Loop
F	YELLOW	Output Relay Contact (Closes with moving contact when detecting vehicle)
G	BLUE	Output Relay Contact (Opens with moving contact when detecting vehicle)
H	GREEN	Chassis Ground
J	GREY	110 VAC Delay/Extend Override
Shell		Ground (shall be connected to pin H in the connector)

DETECTOR AMPLIFIER PIN DESIGNATION

NOTES:
1. WHEN REQUESTED BY THE ENGINEER, MEASURE RESISTANCE-TO-GROUND OF GROUND ROD AT TRAFFIC CONTROL FOUNDATIONS. SEE FALL-OF-POTENTIAL METHOD. IF LESS THAN 10 ohms, INSTALL SUPPLEMENTAL ELECTRODES AS REQUIRED. NEC ARTICLE 250.
2. DURING THE TEST, THE GROUND ROD SHOULD NOT BE BONDED TO ANY RMC IN THE FOUNDATION.
3. THE VOLTAGE SOURCE, VOLTMETER, AMMETER, ELECTRODES P AND C, AND CONNECTING CABLES ARE AVAILABLE AS A SPECIALIZED TEST INSTRUMENT.
4. REFER TO NATIONAL ELECTRICAL SAFETY CODE (NESC) SECTION 09, GROUNDING METHODS FOR ELECTRIC SUPPLY AND COMMUNCATIONS FACILITIES.
5. REFER TO NATIONAL ELECTRICAL CODE (NEC) CHAPTER 2, ARTICLE 250, GROUNDING.

3 POINT FALL-OF-POTENTIAL GROUND RESISTANCE TEST

LEGEND AS SHOWN ON TRAFFIC CONTROL SIGNAL PLAN:
INDUCTIVE LOOP DETECTOR
SAW CUT
RIGID METAL CONDUIT
HANDHOLE

REV.	DATE	REVISION DESCRIPTION
2	1-2014	REVISED GROUND RESISTANCE NOTES.
1	4-2012	MINOR REVISIONS.

THE INFORMATION, INCLUDING ESTIMATED QUANTITIES OF WORK, SHOWN ON THESE SHEETS IS BASED ON LIMITED INVESTIGATIONS BY THE STATE AND IS IN NO WAY WARRANTED TO INDICATE THE CONDITIONS OF ACTUAL QUANTITIES OF WORK WHICH WILL BE REQUIRED.

Plotted Date: 1/7/2014

DIMENSIONS ARE IN ENGLISH (.") & METRIC UNITS (mm).
METRIC DIMENSIONS ARE ROUNDED:
- OVER 1" TO NEAREST 5 mm
- UNDER 1" TO NEAREST 1 mm.

NOT TO SCALE

STATE OF CONNECTICUT
DEPARTMENT OF TRANSPORTATION

Filename: CTDOT_TRAFFIC_STD.DGN Model: TR-1000_01

SUBMITTED BY: NAME/DATE/TIME: Tracy L. Fogarty 2014.01.07 16:11:26-05'00'
APPROVED BY: NAME/DATE/TIME: Charles S. Harlow 2014.01.08 09:02:11-05'00'

CTDOT STANDARD SHEET
OFFICE OF ENGINEERING

STANDARD SHEET TITLE: GENERAL CLAUSES (TEST PROCEDURES)

STANDARD SHEET NO.: TR-1000_01

SVIGALS + PARTNERS
84 Orange Street + New Haven, Connecticut
203.786.5110 + www.svigals.com

Tighe&Bond
www.tighebond.com
1000 Bridgeport Avenue
Suite 320
Shelton, CT 06484
(203) 712-1100

REVISION LOG:

No.	Description	Date

PROJECT NAME:
ENGINEERING & SCIENCE UNIVERSITY MAGNET SCHOOL
500 BOSTON POST ROAD
WEST HAVEN, CONNECTICUT 06516

PHASE:
CONSTRUCTION DOCUMENTS PHASE 2 OF 3

DRAWING TITLE:
GENERAL CLAUSES (TEST PROCEDURES)

SCALE: AS NOTED
DATE: JULY 11, 2013
JOB NUMBER: S1732
SDE NUMBER: 093-0357 MAG/N

DRAWING NUMBER:
TR-1000_01

Jan 18, 2014-11:42am Plotted By: rmr
Tighe & Bond, Inc. J:\S\S1732 Svigals ESUMS\DRAWINGS\0_Current Drawings\DS-S1732-01.dwg

7/18/2013 5:53:25 PM

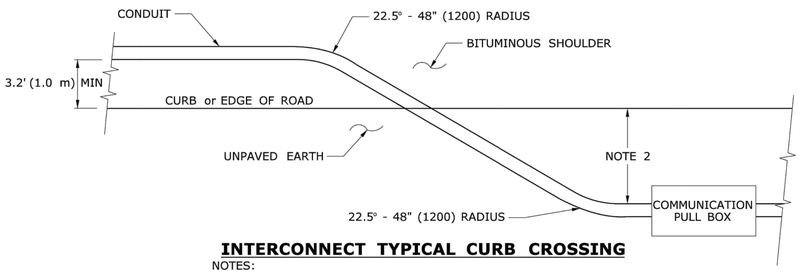

INTERCONNECT TYPICAL CURB CROSSING

NOTES:

1. RESTORE AREAS DISTURBED BY TRENCH TO ORIGINAL CONDITION.
2. INSTALL PULL BOX A MINIMUM OF 10' (3.0 m) FROM CURB UNLESS OTHERWISE SHOWN ON PLANS OR DIRECTED BY ENGINEER.

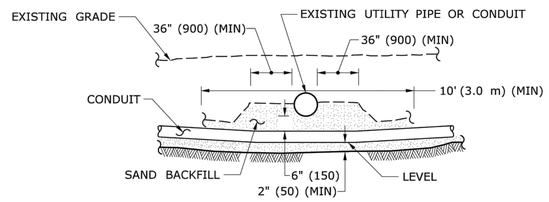

CROSSING UNDER EXISTING UTILITY

NOTES:

1. WHEN ENCOUNTERED AT APPROXIMATELY THE SAME DEPTH, CROSS BENEATH.
2. PROTECT & SUPPORT EXPOSED EXISTING UTILITY.

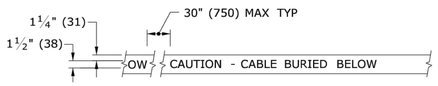

DETECTABLE WARNING TAPE

NOTE:

STANDARD SPECIFICATIONS, ARTICLE: 1.05.15

1. TAPE COLORS:
   COMMUNICATION - ORANGE BACKGROUND / BLACK LEGEND
   POWER - RED BACKGROUND / BLACK LEGEND

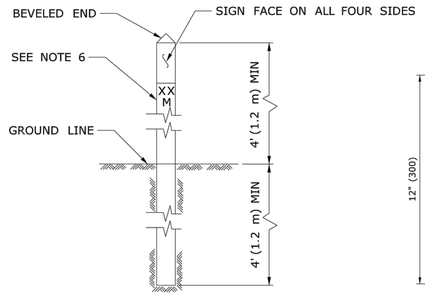

INTERCONNECT CONDUIT IDENTIFICATION POST

NOTES:

1. 4" x 4" (100 x 100) NOMINAL, PRESSURE TREATED WOOD POST.
2. ATTACH SIGN TO POST WITH ¼" x 1¼" (6 x 31) STAINLESS STEEL LAG SCREW WITH NYLON WASHER ON FACE OF SIGN.
3. SIGN COLORS: BACKGROUND - ORANGE (RETROREFLECTIVE) LEGEND - BLACK (OPAQUE).
4. INSTALL POST APPROX 24" (600) FROM RMC IN VICINITY OF EACH PULL BOX.
5. INSTALL POSTS BETWEEN PULL BOXES, APPROX 10' (3.0 m) OFF CURB. SPACE POSTS 1500'± (460 m±) APART.
6. PERMANENTLY ATTACH STAINLESS STEEL NUMBERS INDICATING DISTANCE TO TRENCH IN FEET (METERS) CONTAINING COMMUNICATION CABLE. ATTACH NUMBERS TO SIDE OF POST FACING CONDUIT. INCLUDE "M" SUFFIX IF METERS.

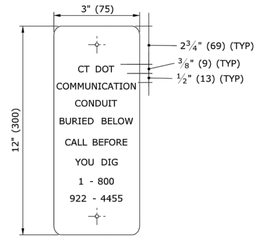

SIGN FACE DETAIL

SIGN # 41-4669

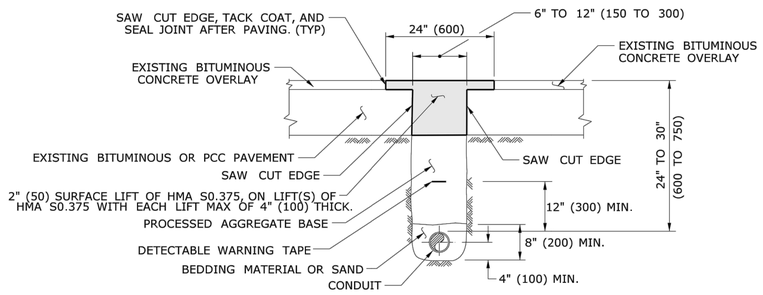

PAVEMENT - BITUMINOUS CONCRETE OR OVERLAYED PORTLAND CEMENT CONCRETE

NOTES:

STANDARD SPECIFICATIONS, ARTICLE: 3.04 & 4.06.03

1. TOTAL HOT MIX ASPHALT (HMA) THICKNESS TO MATCH EXISTING BITUMINOUS CONCRETE AND PORTLAND CEMENT CONCRETE (PCC) THICKNESS.
2. WHEN ALLOWED BY ENGINEER, USE CONTROLLED LOW STRENGTH MATERIAL (CLSM) AS BEDDING MATERIAL. TOP OF CLSM AT LEAST 20" (500) BELOW SURFACE.

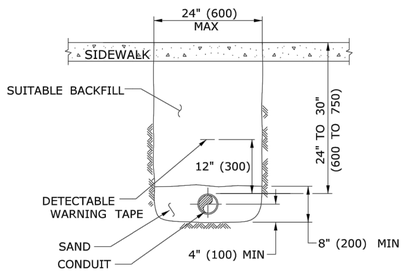

SIDEWALK

NOTES:

STANDARD SPECIFICATIONS, ARTICLE: 9.21 & 9.22

1. WHERE CONCRETE SIDEWALK DAMAGED OR CUT, REPLACE THE ENTIRE SECTION BETWEEN JOINTS. REPLACEMENT SIDEWALK IS PAID FOR AT THE CONTRACT UNIT PRICE FOR "CONCRETE SIDEWALK".

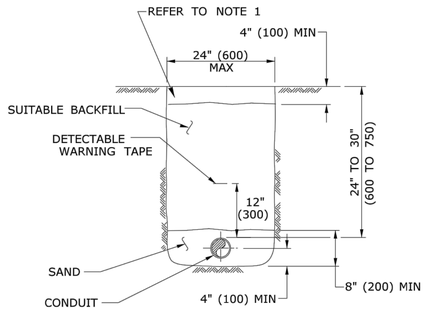

EARTH

NOTES:

STANDARD SPECIFICATIONS, ARTICLE: 9.50

1. IN MOWED AREAS: PLACE TOPSOIL, FERTILIZER, SEED, & MULCH.

GENERAL NOTES:

1. TOP OF CONDUIT NO LESS THAN 24" (600) DEEP.
2. COMPACT BACKFILL IN ≤6" (150) LIFTS. HAND COMPACTION NOT PERMITTED.

LEGEND AS SHOWN ON TRAFFIC CONTROL SIGNAL PLAN:

-- -- RMC (RIGID METAL CONDUIT)

REV.	DATE	REVISION DESCRIPTION
1	4-2012	REVISED BITUMINOUS CONRCETE TO HMA, & MINOR REVISIONS.

THE INFORMATION, INCLUDING ESTIMATED QUANTITIES OF WORK, SHOWN ON THESE SHEETS IS BASED ON LIMITED INVESTIGATIONS BY THE STATE AND IS IN NO WAY WARRANTED TO INDICATE THE CONDITIONS OF ACTUAL QUANTITIES OF WORK WHICH WILL BE REQUIRED.

Plotted Date: 4/14/2012

DIMENSIONS ARE IN ENGLISH (.") & METRIC UNITS (mm).
METRIC DIMENSIONS ARE ROUNDED:
- OVER 1" TO NEAREST 5 mm
- UNDER 1" TO NEAREST 1 mm.

NOT TO SCALE

STATE OF CONNECTICUT
DEPARTMENT OF TRANSPORTATION

Filename: CTDOT_TRAFFIC_STD.dgn Model: TR-1001_01

SUBMITTED BY: NAME/DATE/TIME: Tracy L. Fogarty 2012.05.01 12:54:42-04'00'
APPROVED BY: NAME/DATE/TIME: Timothy M. Wilson 2012.05.09 10:23:34-04'00'

CTDOT STANDARD SHEET
OFFICE OF ENGINEERING

STANDARD SHEET TITLE: TRENCHING & BACKFILLING, ELECTRICAL CONDUIT

STANDARD SHEET NO.: TR-1001_01

SVIGALS + PARTNERS
84 Orange Street + New Haven, Connecticut
203.786.5110 + www.svigals.com

Tighe&Bond
www.tighebond.com
1000 Bridgeport Avenue
Suite 320
Shelton, CT 06484
(203) 712-1100

REVISION LOG:

No.	Description	Date

PROJECT NAME:

ENGINEERING & SCIENCE UNIVERSITY MAGNET SCHOOL

500 BOSTON POST ROAD
WEST HAVEN, CONNECTICUT 06516

PHASE:

CONSTRUCTION DOCUMENTS PHASE 2 OF 3

DRAWING TITLE:

TRENCHING & BACKFILLING, ELECTRICAL CONDUIT

SCALE: AS NOTED

DATE: JULY 11, 2013

JOB NUMBER: S1732

SDE NUMBER: 093-0357 MAG/N

DRAWING NUMBER:

TR-1001_01

7/18/2013 5:53:25 PM

Jun 18, 2014-11:42am Plotted By: rmr
Tighe & Bond, Inc. J:\S\S1732 Sylgale ESUMS\DRAWINGS\0_Current\Drawings\DS-S1732-01.dwg

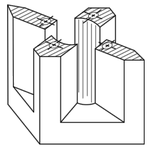

PICTORIAL SECTION A-A

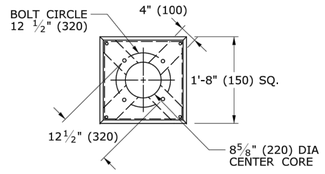

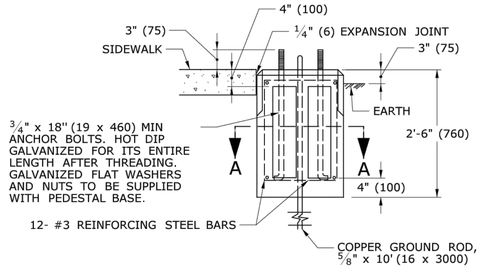

TRAFFIC CONTROL FOUNDATION PEDESTAL - TYPE I - PRECAST

NOTES:

PLACE NO. 6 CRUSHED STONE IN CENTER OPENING AFTER CONDUITS AND GROUND ROD HAVE BEEN INSTALLED.

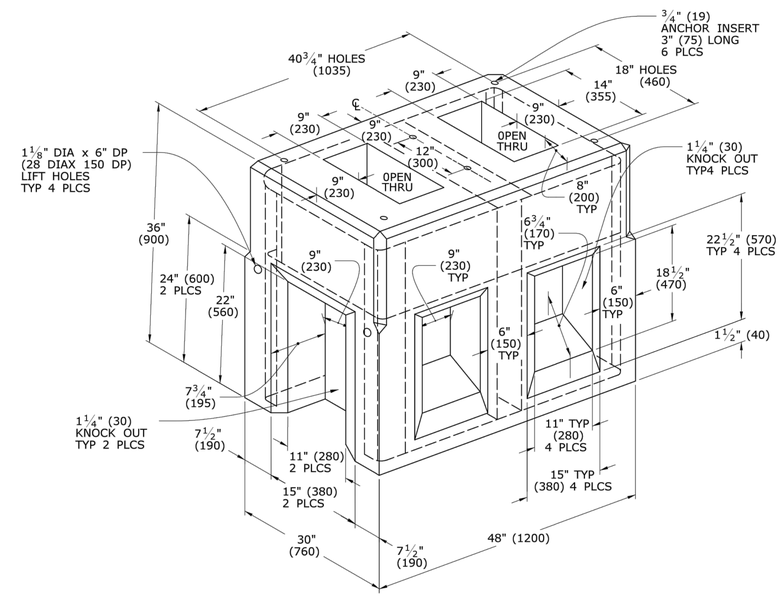

TRAFFIC CONTROL FOUNDATION CONTROLLER - TYPE IV - PRECAST

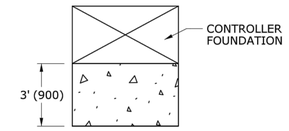

INSTALL PRECAST OR CAST IN PLACE CONCRETE SIDEWALK ON CABINET DOOR SIDE OF CONTROLLER FOUNDATION.

PITCH SIDEWALK ¼" PER FOOT (20 PER METER) AWAY FROM THE CONTROLLER FOUNDATION.

REFER TO HIGHWAY STANDARD SHEET HW-921_01 FOR SIDEWALK CONSTRUCTION.

TYPICAL CONCRETE SIDEWALK AT CONTROLLER FOUNDATION

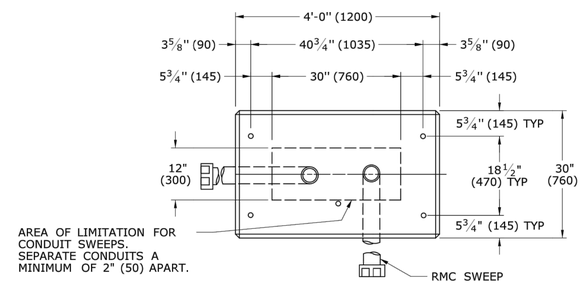

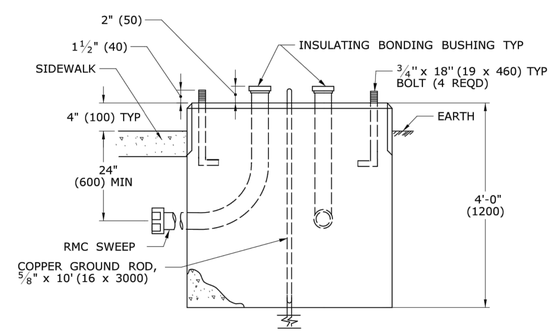

TRAFFIC CONTROL FOUNDATION CONTROLLER - TYPE IV - CAST IN PLACE

NOTES:

INSTALL FOUNDATION ON 6" (150) OF COMPACTED GRAVEL IN ACCORDANCE WITH SECTION 2.14.
LEVEL FOUNDATION WITH A PROJECTION OF 4" (100) ABOVE FINISHED GRADE.
INSTALL COPPER GROUND ROD: ⅝" x 10 (16 x 3000).
PLACE NO. 6 CRUSHED STONE IN THE CENTER OPENINGS AFTER THE CONDUITS AND GROUND ROD HAVE BEEN INSTALLED. THE OPENINGS SHALL BE CAPPED WITH A 2" (50) GROUT LEVEL WITH THE TOP OF THE FOUNDATION AND NEATLY FINISHED. THE GROUT SHALL CONFORM WITH THE REQUIREMENTS OF ARTICLE M.3.01-12.
CONCRETE: CLASS "A" CONFORMING TO ARTICLE M.03.01.
#4 REBAR 2" (50) MIN COVER AROUND ALL OPENINGS, 3-#4 REBARS IN EACH CORNER.
CONDUITS SHALL NOT PROJECT MORE THAN 2" (50) ABOVE FOUNDATION.

LEGEND AS SHOWN ON TRAFFIC CONTROL SIGNAL PLAN:
- PROPOSED CONTROLLER
- EXISTING CONTROLLER
- PROPOSED STEEL SPAN POLE
- EXISTING STEEL SPAN POLE

REV.	DATE	REVISION DESCRIPTION
2	1-2014	REMOVED SPAN POLE FOUNDATION DETAILS, REVISED TYPICAL CONCRETE SIDEWALK AT CONTROLLER FOUNDATION.
1	4-2012	MINOR REVISIONS.

THE INFORMATION, INCLUDING ESTIMATED QUANTITIES OF WORK, SHOWN ON THESE SHEETS IS BASED ON LIMITED INVESTIGATIONS BY THE STATE AND IS IN NO WAY WARRANTED TO INDICATE THE CONDITIONS OF ACTUAL QUANTITIES OF WORK WHICH WILL BE REQUIRED.

Plotted Date: 1/7/2014

DIMENSIONS ARE IN ENGLISH (.") & METRIC UNITS (mm).
METRIC DIMENSIONS ARE ROUNDED:
- OVER 1" TO NEAREST 5 mm
- UNDER 1" TO NEAREST 1 mm.

NOT TO SCALE

STATE OF CONNECTICUT
DEPARTMENT OF TRANSPORTATION

Filename: CTDOT_TRAFFIC_STD.DGN Model: TR-1002_01

SUBMITTED BY: NAME/DATE/TIME: Tracy L. Fogarty 2014.01.07 16:12:06-05'00'
APPROVED BY: NAME/DATE/TIME: Charles S. Harlow 2014.01.08 09:02:54-05'00'

CTDOT STANDARD SHEET
OFFICE OF ENGINEERING

STANDARD SHEET TITLE: TRAFFIC CONTROL FOUNDATIONS

STANDARD SHEET NO.: TR-1002_01

SVIGALS + PARTNERS
84 Orange Street + New Haven, Connecticut
203.786.5110 + www.svigals.com

Tighe&Bond
www.tighebond.com
1000 Bridgeport Avenue
Suite 320
Shelton, CT 06484
(203) 712-1100

REVISION LOG:

No.	Description	Date

PROJECT NAME:
ENGINEERING & SCIENCE UNIVERSITY MAGNET SCHOOL

500 BOSTON POST ROAD
WEST HAVEN, CONNECTICUT 06516

PHASE:
CONSTRUCTION DOCUMENTS PHASE 2 OF 3

DRAWING TITLE:
TRAFFIC CONTROL FOUNDATIONS

SCALE: AS NOTED
DATE: JULY 11, 2013
JOB NUMBER: S1732
SDE NUMBER: 093-0357 MAG/N

DRAWING NUMBER:
TR-1002_01

7/18/2013 5:53:25 PM

Jun 18, 2014-11:43am Plotted By: cmv
Tighe & Bond, Inc. J:\S\S1732 Svigals ESUMS\DRAWINGS\0_Current\Drawings\DS-S1732-01.dwg

COVER NOTES:

1. GROUNDING TAB WELDED TO BOTTOM CENTER OF COVER WITH 3/16" (5) WELD (3 SIDES).
2. ATTACH 6' (2 m) LENGTH OF NO. 8 GROUND WIRE TO GROUNDING TAB WITH CONDUCTOR CONNECTOR, 1/4" - 20 X 3/4" (M6 X 20) LG SST HEX HEAD BOLT, AND SST FLAT WASHER. ATTACH FREE END OF GROUND WIRE TO CONDUIT BONDING BUSHING IN HANDHOLE.
3. CONDUCTOR CONNECTOR: COPPER ALLOY BODY, BRASS SCREW, BRASS OR COPPER ALLOY PRESSURE PLATE.
4. COVER SCREW INSERT: 3/8"-16 (9-16), 1 1/2"L (37L), STAINLESS STEEL.
5. COVER SCREW: 3/8"-16 (9-16), 1"L (25L), FLAT HEAD, SLOTTED, STAINLESS STEEL.

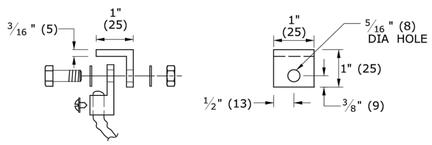

STEEL GROUNDING TAB w/ CONDUCTOR CONNECTOR

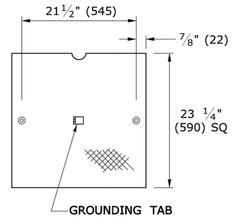

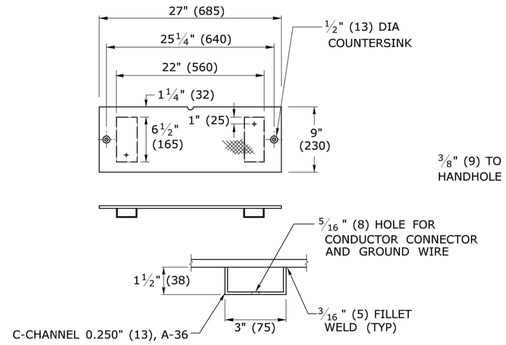

NON SKID FLOOR PLATE GALVANIZED STEEL, 3/8" (10)

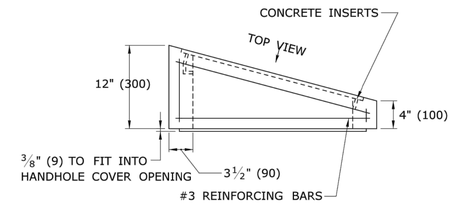

BANK ADAPTER

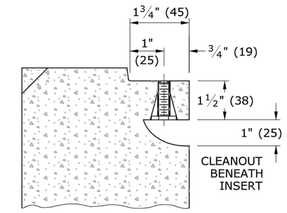

SECTION D-D

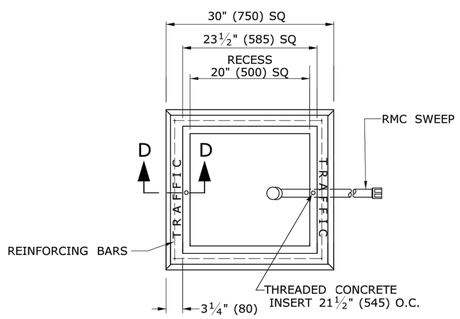

PLAN VIEW

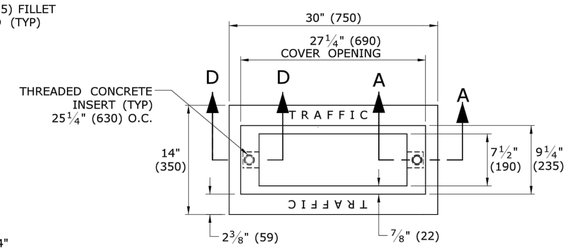

PLAN VIEW

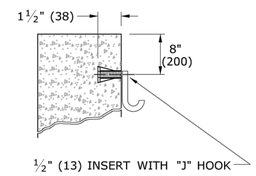

INSERT DETAIL

TYP IN TWO PLACES FOR ALL HANDHOLES

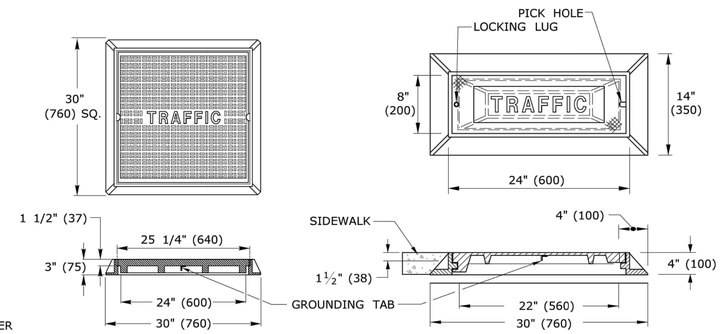

CAST IRON HANDHOLE COVERS

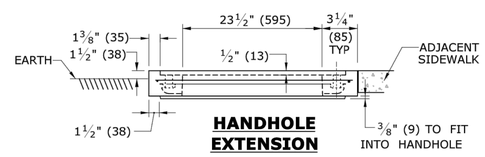

HANDHOLE EXTENSION

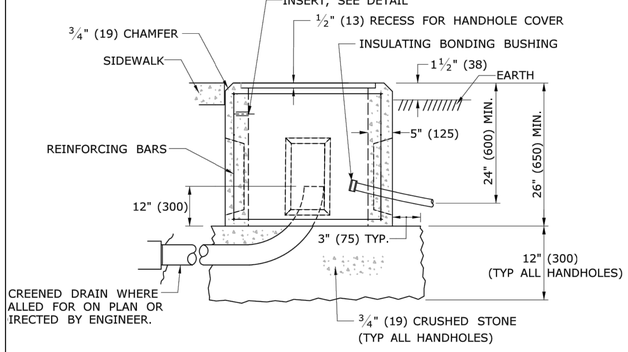

CONCRETE HANDHOLE TYPE I

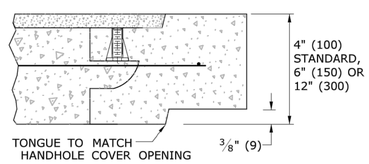

SECTION A-A
HANDHOLE EXTENSIONS

4 - #8 REINFORCING BARS REQ'D

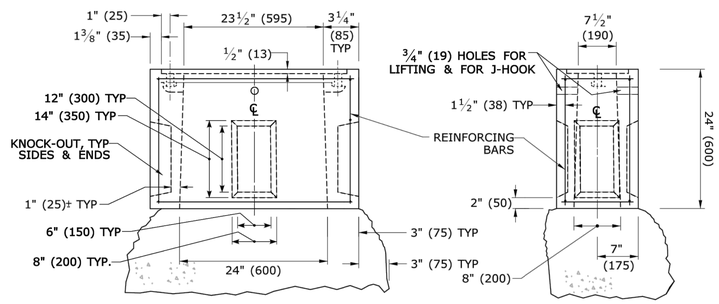

BASE SECTION
CONCRETE HANDHOLE TYPE II

HANDHOLE NOTES:

1. MINIMUM CLASS "C" CONCRETE.
2. COMPLETE TYPE II HANDHOLE:
   IN EARTH AREAS, CONSISTS OF A BASE SECTION WITH 4" (100) HANDHOLE EXTENSION,
   IN SIDEWALK AREAS, CONSISTS OF A BASE SECTION WITH 4" (100) CAST IRON COVER.
3. PLAN VIEW DIMENSIONS, SECTION VIEW, & DETAILS, SAME FOR BASE SECTION, EXTENSIONS & BANK ADAPTER.
4. GROUT AROUND ALL CONDUITS.
5. INSTALL 30" (750) SIDE PARALLEL TO ROAD UNLESS OTHERWISE NOTED.
6. INSTALL HANDHOLES APPROX. 12" (300) BEHIND CURB OR IF NO CURB, 24" (600) BEHIND EDGE OF ROAD UNLESS OTHERWISE SPECIFIED.
7. CAST THE WORD "TRAFFIC" INTO TOP EDGE OF HANDHOLE, 1 1/2" (38) LETTERS.
8. WHERE AN EXISTING CONCRETE SIDEWALK SLAB ABUTTING A HANDHOLE IS DAMAGED OR CUT DURING INSTALLATION, REPLACE THE ENTIRE SIDEWALK SECTION.
9. 12-#3 REINFORCING BARS REQUIRED FOR ALL HANDHOLES. (8 HORIZONTAL, 4 VERTICAL)

D AS SHOWN ON TRAFFIC CONTROL SIGNAL PLAN:
ROPOSED HANDHOLE
XISTING HANDHOLE

DATE	REVISION DESCRIPTION
4-2014	REVISED HANDHOLES NOTES, ADDED NOTE #6. ADDED "J" HOOK TO INSERT DETAIL.
4-2012	CAST IRON COVER: CHANGED BOLT TO PICK HOLE. ADDED EXTENSIONS, C-CHANNEL, CONDUCTOR CONNECTOR & MINOR REVISIONS.

THE INFORMATION, INCLUDING ESTIMATED QUANTITIES OF WORK, SHOWN ON THESE SHEETS IS BASED ON LIMITED INVESTIGATIONS BY THE STATE AND IS IN NO WAY WARRANTED TO INDICATE THE CONDITIONS OF ACTUAL QUANTITIES OF WORK WHICH WILL BE REQUIRED.

Plotted Date: 4/11/2014

DIMENSIONS ARE IN ENGLISH ('.") & METRIC UNITS (mm).
METRIC DIMENSIONS ARE ROUNDED:
- OVER 1" TO NEAREST 5 mm
- UNDER 1" TO NEAREST 1 mm.

NOT TO SCALE

STATE OF CONNECTICUT
DEPARTMENT OF TRANSPORTATION

Filename: CTDOT_TRAFFIC_STD.DGN Model: TR-1010_01

SUBMITTED BY: NAME/DATE/TIME: Tracy L. Fogarty, P.E. 2014.04.25 16:01:09-04'00'
APPROVED BY: NAME/DATE/TIME: Digitally signed by Charles S. Harlow, P.E. Date: 2014.04.29 14:26:25-04'00'

CTDOT STANDARD SHEET
OFFICE OF ENGINEERING

STANDARD SHEET TITLE: CONCRETE HANDHOLE

STANDARD SHEET NO.: TR-1010_01

Jun 18, 2014-11:42am Plotted By: cmr
Tighe & Bond, Inc. J:\S\S1732 Svigals ESUMS\DRAWINGS\0_Current\Drawings\DS-S1732-01.dwg

SVIGALS + PARTNERS
84 Orange Street + New Haven, Connecticut
203.786.5110 + www.svigals.com

Tighe&Bond
www.tighebond.com
1000 Bridgeport Avenue
Suite 320
Shelton, CT 06484
(203) 712-1100

REVISION LOG:

No.	Description	Date

PROJECT NAME:
ENGINEERING & SCIENCE UNIVERSITY MAGNET SCHOOL
500 BOSTON POST ROAD
WEST HAVEN, CONNECTICUT 06516

PHASE:
CONSTRUCTION DOCUMENTS PHASE 2 OF 3

DRAWING TITLE:
CONCRETE HANDHOLE

SCALE: AS NOTED
DATE: JULY 11, 2013
JOB NUMBER: S1732
SDE NUMBER: 093-0357 MAG/N

DRAWING NUMBER:
TR-1010_01

7/18/2013 5:53:25 PM

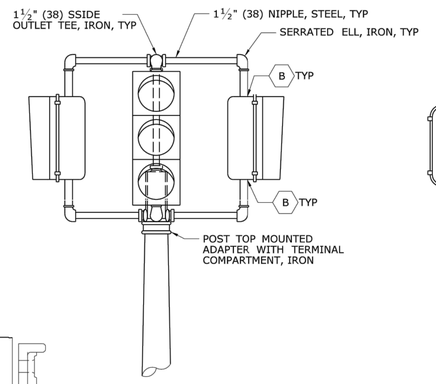

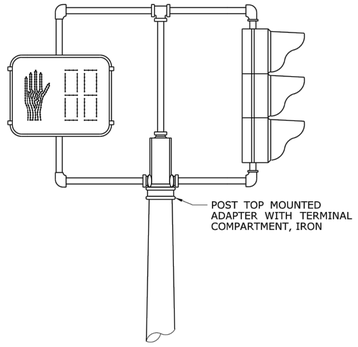

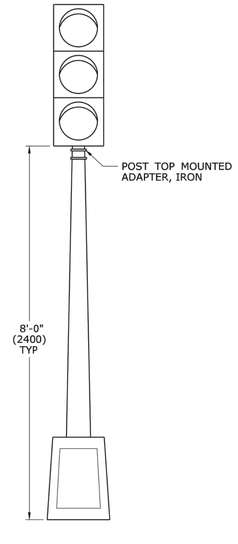

ONE WAY TRAFFIC SIGNAL PEDESTAL MOUNTED

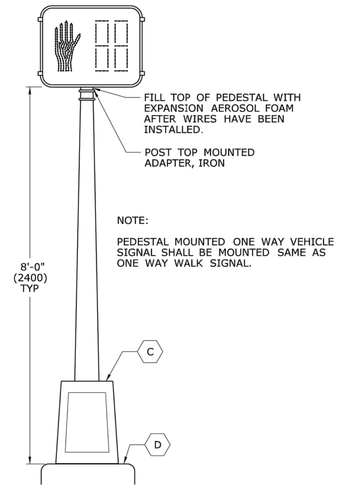

NOTE:

PEDESTAL MOUNTED ONE WAY VEHICLE SIGNAL SHALL BE MOUNTED SAME AS ONE WAY WALK SIGNAL.

ONE WAY WALK SIGNAL PEDESTAL MOUNTED

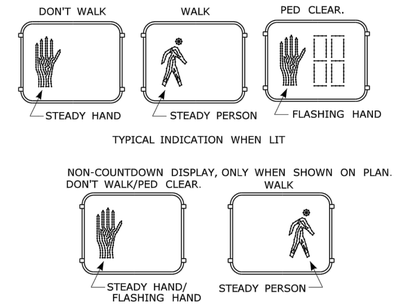

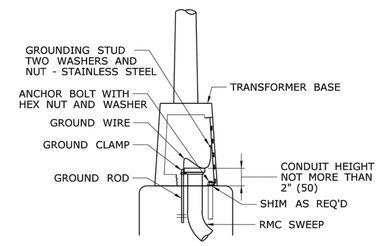

ALUMINUM PEDESTAL INSTALLATION DETAIL

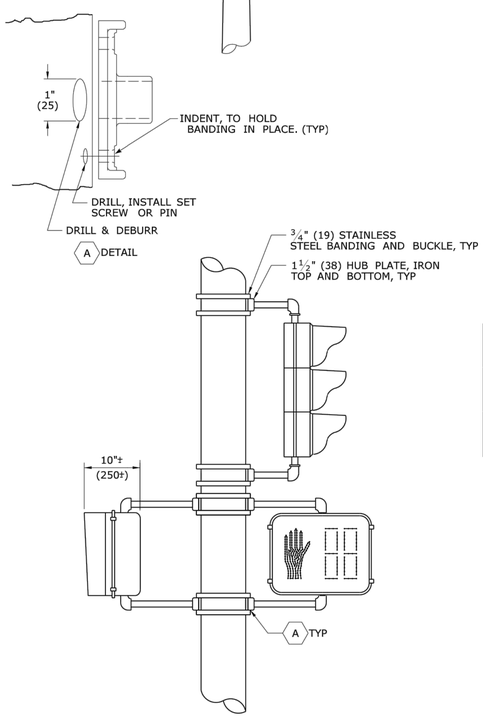

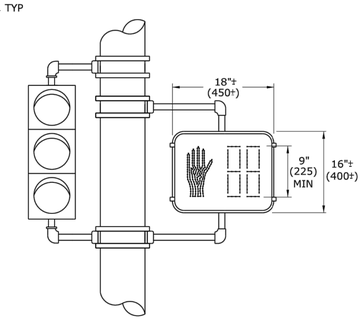

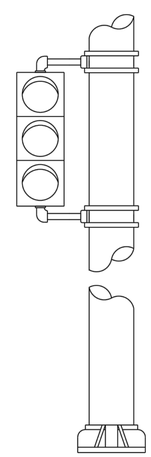

ONE WAY TRAFFIC SIGNAL POLE MOUNTED

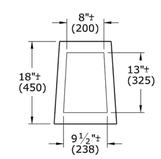

ALUMINUM PEDESTAL DOOR OPENING DETAIL

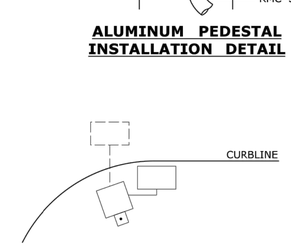

WHEN PEDESTALS OR SPAN POLES ARE INSTALLED CLOSE TO THE CURB, SIDE MOUNT PEDESTRIAN OR TRAFFIC SIGNALS TO AVOID VISOR DAMAGE FROM TURNING VEHICLES.

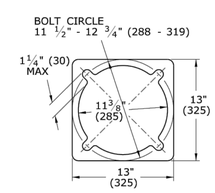

PEDESTAL BASE PLAN

NOTES:

A. SECURE LOWER HUB PLATE WITH STAINLESS STEEL SET SCREW OR PIN PRIOR TO BANDING TO PREVENT MOVEMENT. INSTALL CABLE THROUGH BOTTOM OF HUB PLATE.
B. REFER TO CTDOT TRAFFIC STANDARD SHEET, TR-1105_01, TRAFFIC SIGNALS & CABLE ASSIGNMENTS.
C. IF THREADED, MIN 1" (25) THREADED INTO BASE, SECURED WITH STAINLESS STEEL SET SCREWS.
D. BASE DESIGNED AS BREAK-AWAY.

INCANDESCENT WALK SIGNAL LAMPS ARE 67 WATTS, RATED AT 8000 HOURS LAMP LIFE. LED WALK SIGNAL LAMPS ARE MAXIMUM 15 WATTS, WARRANTEED AT 5 YEAR LIFE.

LEGEND AS SHOWN ON TRAFFIC CONTROL SIGNAL PLAN:
- STEEL SPAN POLE, MAST ARM ASSEMBLY SHAFT
- ALUMINM PEDESTAL
- TRAFFIC SIGNAL
- PEDESTRIAN SIGNAL
- PEDESTAL MOUNTED, TRAFFIC & PEDESTRIAN SIGNALS
- POLE MOUNTED, TRAFFIC & PEDESTRIAN SIGNALS

REV.	DATE	REVISION DESCRIPTION
2	4-2012	MINOR REVISIONS.
1	1-2010	INCLUDED COUNTDOWN PEDESTRIAN SIGNALS.

THE INFORMATION, INCLUDING ESTIMATED QUANTITIES OF WORK, SHOWN ON THESE SHEETS IS BASED ON LIMITED INVESTIGATIONS BY THE STATE AND IS IN NO WAY WARRANTED TO INDICATE THE CONDITIONS OF ACTUAL QUANTITIES OF WORK WHICH WILL BE REQUIRED.

Plotted Date: 4/14/2012

DIMENSIONS ARE IN ENGLISH ("-") & METRIC UNITS (mm). METRIC DIMENSIONS ARE ROUNDED: - OVER 1" TO NEAREST 5 mm - UNDER 1" TO NEAREST 1 mm.

NOT TO SCALE

STATE OF CONNECTICUT
DEPARTMENT OF TRANSPORTATION

Filename: CTDOT_TRAFFIC_STD.dgn Model: TR-1102_01

SUBMITTED BY: NAME/DATE/TIME: Tracy L. Fogarty 2012.05.01 12:55:27-04'00'
APPROVED BY: NAME/DATE/TIME: Timothy M. Wilson 2012.05.09 10:24:58-04'00'

CTDOT STANDARD SHEET
OFFICE OF ENGINEERING

STANDARD SHEET TITLE: PEDESTALS, PEDESTRIAN SIGNALS

STANDARD SHEET NO.: TR-1102_01

SVIGALS + PARTNERS
84 Orange Street + New Haven, Connecticut
203.786.5110 + www.svigals.com

Tighe&Bond
www.tighebond.com
1000 Bridgeport Avenue
Suite 320
Shelton, CT 06484
(203) 712-1100

REVISION LOG:

No.	Description	Date

PROJECT NAME:
ENGINEERING & SCIENCE UNIVERSITY MAGNET SCHOOL

500 BOSTON POST ROAD
WEST HAVEN, CONNECTICUT 06516

PHASE:
CONSTRUCTION DOCUMENTS
PHASE 2 OF 3

DRAWING TITLE:
CONCRETE HANDHOLE

SCALE: AS NOTED
DATE: JULY 11, 2013
JOB NUMBER: S1732
SDE NUMBER: 093-0357 MAG/N

DRAWING NUMBER:
TR-1102_01

Jun 18, 2014 11:42am Plotted By: cmc
Tighe & Bond, Inc. J:\S\S1732 Svigals ESUMS\DRAWINGS\0_Current\Drawings\DS-S1732-01.dwg

7/18/2013 5:53:25 PM

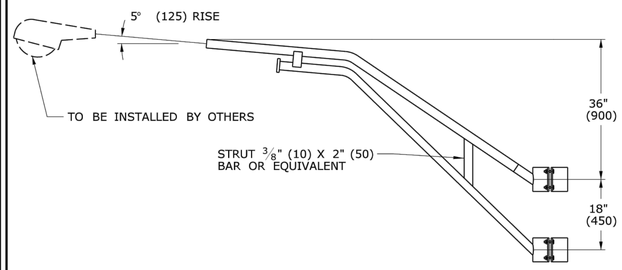

TYPICAL TRUSS LUMINAIRE ARM

12' to 16' (3600 to 5000) 2" (50) SCH 40
20' to 30' (6000 to 9000) 2½" (63) SCH 40

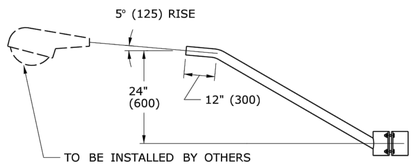

TYPICAL SINGLE LUMINAIRE ARM

4' to 10' (1200 to 3000) 2" (50) SCH 40

ARM CLAMP DETAIL MATERIAL SPEC'S

CLAMP PLATE	ASTM A36
BOLTS & NUTS	ASTM A325
PIPE	ASTM A501
BAR	ASTM A501

SHAFT SIZE				
LENGTH	LOAD * AT YIELD	STRINGING TENSION	MAXIMUM DEFLECTION AT STRINGING TENSION	BOLT CIRCLE
26'	6100 lbs.	2440 lbs.	9.0''	20''
28'	6100 lbs.	2440 lbs.	9.0''	20''
30'	7800 lbs.	3120 lbs.	9.6''	20''
32'	10,000 lbs.	4000 lbs.	10.3''	22''
34'	11,200 lbs.	4480 lbs.	10.9''	22''
* 18'' FROM TOP OF POLE				

SHAFT SIZE				
LENGTH	LOAD * AT YIELD	STRINGING TENSION	MAXIMUM DEFLECTION AT STRINGING TENSION	BOLT CIRCLE
8.0 m	27 150 N	10 860 N	230	510
8.5 m	27 150 N	10 860 N	230	510
9.0 m	34 710 N	13 890 N	240	510
9.5 m	44 500 N	17 800 N	260	560
10.0 m	46 700 N	18 670 N	260	560
10.5 m	49 840 N	19 940 N	280	560
* 460 FROM TOP OF POLE				

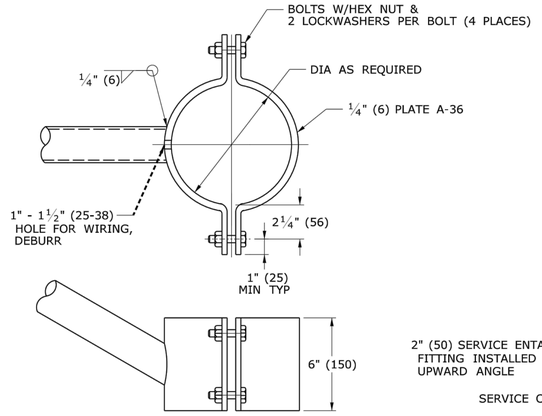

ARM CLAMP DETAIL

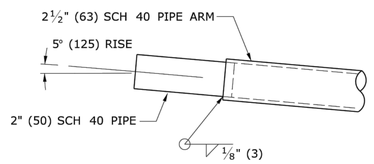

REDUCING TENON EXTENSION FOR FOR 2½" (64) ARMS

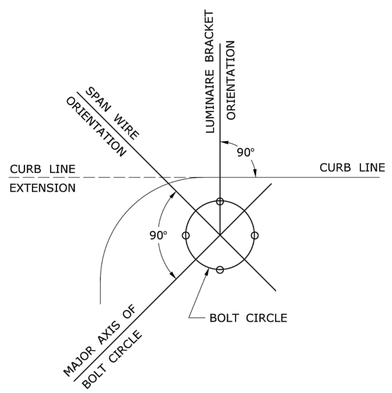

STEEL SPAN POLE ORIENTATION DETAIL

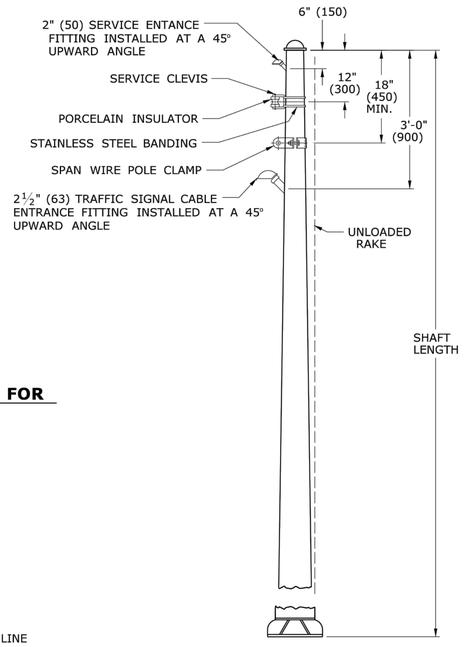

TYPICAL STEEL SPAN POLE

- RAKE UNLOADED SPAN POLE IN ACCORDANCE WITH STANDARD SPECIFICATIONS, SECTION 11.03.03 - CONSTRUCTION METHODS.
- WHEN THERE IS MORE THAN ONE SPAN ATTACHMENT, THE RESULTANT VECTOR MUST BE SQUARE TO THE BOLTS.
- TWO BOLTS IN COMPRESSION, TWO BOLTS IN TENSION.
- FOUNDATIONS INSTALLED WITH GREATER THAN 9° ERROR ON BOLT CIRCLE AXIS FROM SPAN WIRE ORIENTATION, WILL NOT BE ACCEPTED.
- EACH SPAN ATTACHMENT SHALL USE A SEPARATE SPAN CLAMP.

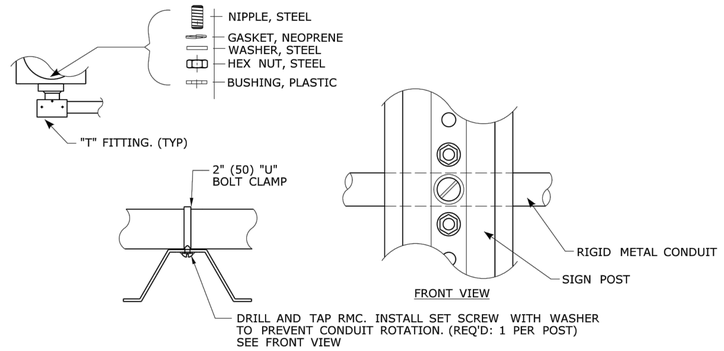

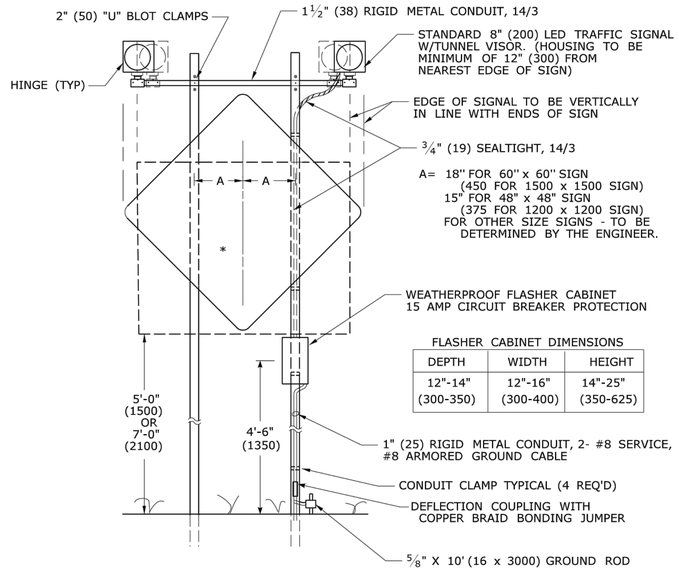

FLASHER CABINET DIMENSIONS

DEPTH	WIDTH	HEIGHT
12"-14" (300-350)	12"-16" (300-400)	14"-25" (350-625)

TYPICAL ALTERNATE FLASHING SIGNALS FOR WARNING SIGNS

* TYPICAL WARNING SIGN
A CLEAR PATH NOT LESS THAN 3' (900) SHALL BE PROVIDED IN SIDEWALK AREAS FOR HANDICAP ACCESS.

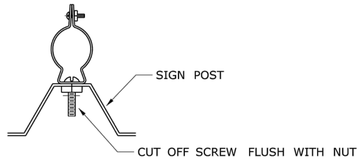

CONDUIT CLAMP ENLARGEMENT

LEGEND AS SHOWN ON TRAFFIC CONTROL SIGNAL PLAN:
- PROPOSED STEEL SPAN POLE
- EXISTING STEEL SPAN POLE
- WARNING SIGN WITH FLASHERS & CABINET

REV.	DATE	REVISION DESCRIPTION
-		

THE INFORMATION, INCLUDING ESTIMATED QUANTITIES OF WORK, SHOWN ON THESE SHEETS IS BASED ON LIMITED INVESTIGATIONS BY THE STATE AND IS IN NO WAY WARRANTED TO INDICATE THE CONDITIONS OF ACTUAL QUANTITIES OF WORK WHICH WILL BE REQUIRED.

Plotted Date: 10/30/2009

NOT TO SCALE

STATE OF CONNECTICUT
DEPARTMENT OF TRANSPORTATION

Filename: CTDOT_TRAFFIC_STD.dgn Model: TR-1103_01

SUBMITTED BY: NAME/DATE/TIME: Tracy L. Fogarty 2010.01.11 09:30:29 -05'00'
APPROVED BY: NAME/DATE/TIME: John F. Carey 2010.01.13 11:57:02 -05'00'

CTDOT STANDARD SHEET
OFFICE OF ENGINEERING

STANDARD SHEET TITLE: SPAN POLE, ALTERNATE FLASHING SIGNALS FOR WARNING SIGNS

STANDARD SHEET NO.: TR-1103_01

SVIGALS + PARTNERS
84 Orange Street + New Haven, Connecticut
203.786.5110 + www.svigals.com

Tighe&Bond
www.tighebond.com
1000 Bridgeport Avenue
Suite 320
Shelton, CT 06484
(203) 712-1100

REVISION LOG:

No.	Description	Date

PROJECT NAME:
ENGINEERING & SCIENCE UNIVERSITY MAGNET SCHOOL

500 BOSTON POST ROAD
WEST HAVEN, CONNECTICUT 06516

PHASE:
CONSTRUCTION DOCUMENTS
PHASE 2 OF 3

DRAWING TITLE:
SPAN POLE, ALTERNATE FLASHING SIGNALS FOR WARNING SIGNS

SCALE: AS NOTED
DATE: JULY 11, 2013
JOB NUMBER: S1732
SDE NUMBER: 093-0357 MAG/N

DRAWING NUMBER:
TR-1103_01

Jun 18, 2014 11:43am Plotted By: cmr
Tighe & Bond, Inc. J:\S1732 Svigals ESUMS\DRAWINGS\0_Current\Drawings\DS-S1732-01.dwg

7/18/2013 5:53:25 PM

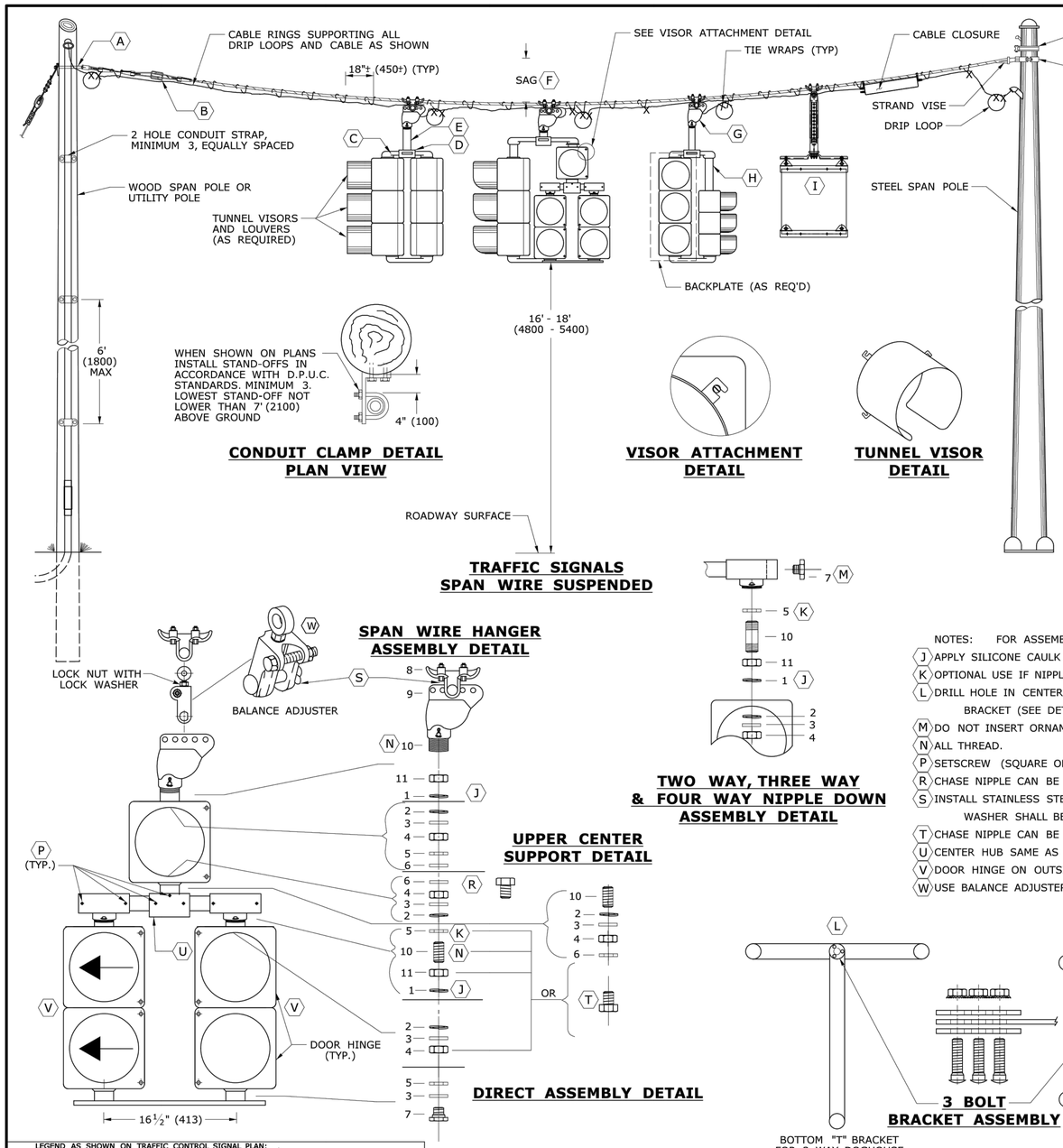

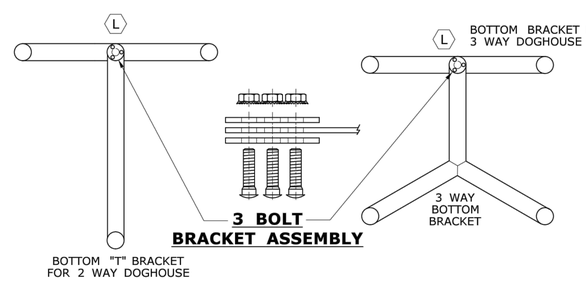

ITEM DESCRIPTION, FOR ASSEMBLY DETAILS
1 - SERRATED TABBED LOCKRING, ALUMINUM (TAB MUST BE FULL WIDTH OF RING)
2 - GASKET, NEOPRENE
3 - WASHER, STEEL
4 - HEX NUT, STEEL
5 - CONDUIT LOCKNUT, STEEL
6 - BUSHING PLASTIC (ONLY IN JUNCTION BOX OR NIPPLED DOWN TRAFFIC SIGNAL)
7 - OCTAGONAL CAP, ALUMINIUM
8 - SPAN WIRE CLAMP
9 - WIRE OUTLET BODY, IRON, FEMALE ONLY
10 - NIPPLE, STEEL
11 - HEX NUT, STEEL, NOTCHED W/SETSCREWS

NOTES: FOR ASSEMBLY DETAILS
(J) APPLY SILICONE CAULK BETWEEN OR AROUND SERRATED LOCKRING AND HOUSING.
(K) OPTIONAL USE IF NIPPLE THREADS TOO FAR INTO ELBOW.
(L) DRILL HOLE IN CENTER OF 2 WAY BOTTOM BRACKET - INSTALL 3 BOLT BRACKET (SEE DETAIL).
(M) DO NOT INSERT ORNAMENTAL CAP PAST DOTTED LINE.
(N) ALL THREAD.
(P) SETSCREW (SQUARE OR ALLEN) ON ALL FITTINGS.
(R) CHASE NIPPLE CAN BE SUBSTITUTED FOR THE COMBINATION OF ITEMS 6, 5 AND 10.
(S) INSTALL STAINLESS STEEL WASHER ON INSIDE OF COTTER PIN. COTTER PIN AND WASHER SHALL BE ON SIDE OF HANGER AWAY FROM SIGNAL CABLES.
(T) CHASE NIPPLE CAN BE SUBSTITUTED FOR COMBINATION 4, 5, 10 AND 11.
(U) CENTER HUB SAME AS (D) EXCEPT TOP OPENING MAY BE THREADED.
(V) DOOR HINGE ON OUTSIDE OF SIDE BY SIDE ASSEMBLY.
(W) USE BALANCE ADJUSTER TO PLUMB SIGNAL ASSEMBLIES AS REQUIRED.

TRAFFIC SIGNAL CABLE COLOR ASSIGNMENTS

SIGNAL ASSEMBLY & CABLE USED	SIGNAL FUNCTION	ARTERY 1	ARTERY 2	SIDE STREET 1	SIDE STREET 2
2 - WAY 9 CONDUCTOR	RED	RED		BLACK	
	YELLOW	ORANGE		WHITE \ BLACK	
	GREEN	GREEN		BLUE	
	SPARE	GREEN\BLACK		RED \ BLACK	
	NEUTRAL	WHITE			
3 - WAY 12 CONDUCTOR	RED	RED	RED \ BLACK	BLACK	
	YELLOW	ORANGE	ORANGE \ BLACK	WHITE \ BLACK	
	GREEN	GREEN	GREEN \ BLACK	BLUE	
	SPARE	BLUE\BLACK	BLACK \ WHITE		
	NEUTRAL	WHITE			
4 - WAY 15 CONDUCTOR	RED	RED	RED \ BLACK	BLACK	RED \ WHITE
	YELLOW	ORANGE	ORANGE \ BLACK	WHITE \ BLACK	BLACK \ WHITE
	GREEN	GREEN	GREEN \ BLACK	BLUE	GREEN \ WHITE
	SPARE	BLUE\BLACK		BLUE \ WHITE	
	NEUTRAL	WHITE			

PEDESTRIAN SIGNAL CABLE COLOR ASSIGNMENTS

SIGNAL ASSEMBLY & CABLE USED	SIGNAL FUNCTION	WIRE COLOR
WALK SIGNAL W/ PUSHBUTTON 7 CONDUCTOR	DON'T WALK	RED
	WALK	GREEN
	NEUTRAL FOR WALK SIGNAL	WHITE
	PEDESTRIAN PUSHBUTTON	BLACK
	NEUTRAL FOR PUSHBUTTON	ORANGE
	SPARE CONDUCTOR	WHITE \ BLACK
	SPARE CONDUCTOR *	BLUE \ BLACK
WALK SIGNAL W/ PUSHBUTTON 7 CONDUCTOR	RED	RED
	YELLOW	ORANGE
	GREEN	GREEN
	NEUTRAL FOR TRAFFIC SIGNAL	WHITE
	PEDESTRIAN PUSHBUTTON	BLACK
	NEUTRAL FOR PUSHBUTTON	WHITE \ BLACK
	SPARE CONDUCTOR *	BLUE \ BLACK

* IF 14/7 FEEDS MORE THAN ONE BUTTON, SPLIT THE BUTTONS AND USE BLUE WITH BLACK TRACER FOR THE ADDITIONAL BUTTON.

TABLE NOTES:
1. INSTALL SEPARATE CABLE BETWEEN CLOSURE AND EACH TRAFFIC SIGNAL ASSEMBLY. WIRE EACH TRAFFIC SIGNAL SECTION SEPARATELY BACK TO CABLE CLOSURE. JUMPERS BETWEEN TERMINALS ARE NOT ALLOWED EXCEPT ON NEUTRAL CONDUCTORS.
2. WIRE ALL SIGNALS, SAME DIRECTION FROM CONTROLLER, SEPARATELY WITH CONDUCTORS IN 21 CONDUCTOR CABLE, EVEN IF INDICATIONS ARE IDENTICAL.
3. CABLES THAT FEED PEDESTRIAN INDICATIONS, PUSH BUTTONS, AND DETECTORS BYPASS CABLE CLOSURE.
4. REFER TO STANDARD SHEET TR-1113_01 FOR CABLE CLOSURE - TYPE A.

NOTES:
SERVICE CONDUCTORS: THW, THWN OR XHHW. INDIVIDUAL WIRES MAY BE USED IN LIEU OF MULTI-CONDUCTOR CABLE.
ALL WORK ON UTILITY POLES MUST COMPLY WITH CURRENT PURA REGULATIONS AND NESC RULES.
(A) ATTACH SPAN AT LEAST 12" (300) BELOW LOWEST POWER COMPANY ATTACHMENT, AND AT LEAST 40" (1000) ABOVE HIGHEST COMMUNICATIONS ATTACHMENT, UNLESS OTHERWISE DIRECTED ON PLANS.
(B) INSTALL STRAIN INSULATOR APPROX 3' (900) FROM UTILITY POLE.
(C) ELBOW OR "T" FITTING MUST HAVE NOTCH FOR SERRATED TABBED LOCKRING.
(D) TOP BRACKET CENTER HUB SHALL BE MIN 4" (100) ROUND AND 3" (75) DEEP OR EQUAL VOLUME. SERRATION CAST IN HUB OR TABBED OR SERRATED LOCKRING, TOP OPENING NOT THREADED.
(E) NIPPLE LENGTH DEPENDS ON SPAN HEIGHT.
(F) SAG OF SPAN TO BE 5%± LENGTH, UNLESS OTHERWISE ALLOWED BY ENGINEER.
(G) FACE ALL ENTRANCE FITTINGS TOWARD CABLE CLOSURE UNLESS SIGNAL ASSEMBLY IS UNBALANCED AND A BALANCE ADJUSTER IS USED.
(H) INSTALL EXTENSION NIPPLE ON TOP OF SIGNAL HOUSING SO BOTTOM OF ALL SIGNALS ARE EVEN.
(I) REFER TO TYPICAL "SIGN FACE SHEET ALUMINUM, R-SERIES SIGNS", AND RELATED SIGN APPURTENANCES. MAXIMUM SIGN SIZE 24" x 24" (600 x 600). ALL STAINLESS STEEL HARDWARE.
SECURE LOUVERS TO TUNNEL VISORS WITH 3 STAINLESS STEEL SCREWS.

LEGEND AS SHOWN ON TRAFFIC CONTROL SIGNAL PLAN:
- PROPOSED WOOD SPAN POLE
- EXISTING WOOD SPAN POLE
- PROPOSED STEEL SPAN POLE
- EXISTING STEEL SPAN POLE
- PROPOSED UTILITY POLE
- EXISTING UTILITY POLE
- POLE ANCHOR & GUY
- STRAIN INSULATOR
- CABLE CLOSURE
- SPAN MOUNTED SIGN
- SPAN MOUNTED TRAFFIC SIGNAL

REV.	DATE	REVISION DESCRIPTION
2	5-2013	MINOR REVISIONS.
1	4-2012	MINOR REVISIONS.

THE INFORMATION, INCLUDING ESTIMATED QUANTITIES OF WORK, SHOWN ON THESE SHEETS IS BASED ON LIMITED INVESTIGATIONS BY THE STATE AND IS IN NO WAY WARRANTED TO INDICATE THE CONDITIONS OF ACTUAL QUANTITIES OF WORK WHICH WILL BE REQUIRED.

Plotted Date: 5/2/2013

DIMENSIONS ARE IN ENGLISH ('.") & METRIC UNITS (mm). METRIC DIMENSIONS ARE ROUNDED: - OVER 1" TO NEAREST 5 mm - UNDER 1" TO NEAREST 1 mm.

NOT TO SCALE

STATE OF CONNECTICUT
DEPARTMENT OF TRANSPORTATION

Filename: CTDOT_TRAFFIC_STD.dgn Model: TR-1105_01

SUBMITTED BY: NAME/DATE/TIME: Tracy L. Fogarty 2013.07.23 09:27:19-04'00'
APPROVED BY: NAME/DATE/TIME: Charles S. Harlow 2013.07.29 13:13:50-04'00'

CTDOT STANDARD SHEET
OFFICE OF ENGINEERING

STANDARD SHEET TITLE: TRAFFIC SIGNALS & CABLE ASSINGMENTS

STANDARD SHEET NO.: TR-1105_01

SVIGALS + PARTNERS
84 Orange Street + New Haven, Connecticut
203.786.5110 + www.svigals.com

Tighe&Bond
www.tighebond.com
1000 Bridgeport Avenue
Suite 320
Shelton, CT 06484
(203) 712-1100

REVISION LOG:

No.	Description	Date

PROJECT NAME:
ENGINEERING & SCIENCE UNIVERSITY MAGNET SCHOOL
500 BOSTON POST ROAD
WEST HAVEN, CONNECTICUT 06516

PHASE:
CONSTRUCTION DOCUMENTS
PHASE 2 OF 3

DRAWING TITLE:
TRAFFIC SIGNALS & CABLE ASSINGMENTS

SCALE: AS NOTED
DATE: JULY 11, 2013
JOB NUMBER: S1732
SDE NUMBER: 093-0357 MAG/N

DRAWING NUMBER:
TR-1105_01

7/18/2013 5:53:25 PM

Jun 18, 2014-11:43am Plotted By: rmv
Tighe & Bond, Inc. J:\S\S1732 Svigals ESUMS\DRAWINGS\0_Current\Drawings\DS-S1732-01.dwg

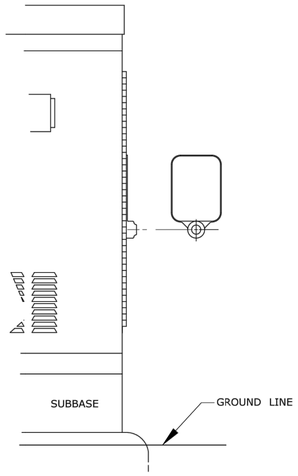

SURFACE MOUNTED

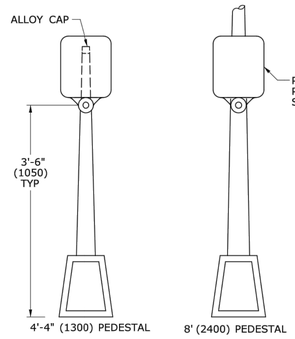

PEDESTAL MOUNTED

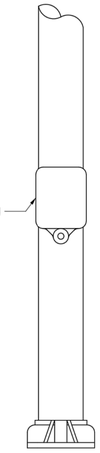

SPAN POLE/MAST ARM MOUNTED

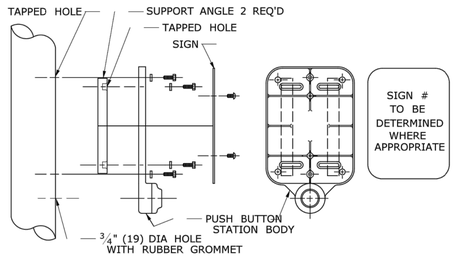

DETAIL A

SIGN # 31-0833
* USE APPROPRIATE ARROW UNLESS OTHERWISE NOTED ON PLAN.

SIGN # 31-0835

FOR CROSSING WITH SIDE STREET GREEN

GENERAL NOTES:

3'-6" (1050) FROM FINISHED GRADE SUCH AS SIDEWALK TO CENTER OF PUSH BUTTON.
PUSH BUTTON INSTALLATIONS SHALL CONFORM TO THE REQUIREMENTS OF THE AMERICANS WITH DISABILITIES ACT (ADA) STANDARDS FOR ACCESSIBLE DESIGN, CURRENT EDITION GOVERNS.
4'-4" (1300) PEDESTAL TO INCLUDE ALLOY CAP SECURED WITH STAINLESS STEEL SET SCREW.

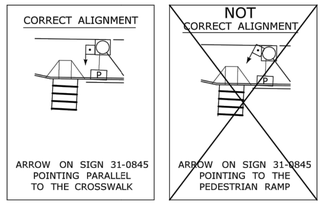

PEDESTRIAN PUSH BUTTON ALIGNMENT

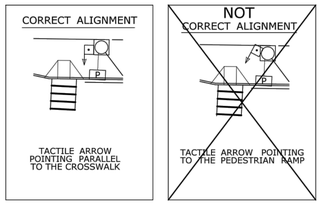

ACCESSIBLE PEDESTRIAN SIGNAL AND DETECTOR

SIGN # 31-0845
* USE APPROPRIATE ARROW UNLESS OTHERWISE NOTED ON PLAN.

EXAMPLE ALIGNMENTS FOR EXCLUSIVE PEDESTRIAN PHASE

LEGEND AS SHOWN ON TRAFFIC CONTROL SIGNAL PLAN:
- PEDESTRIAN PUSH BUTTON
- PEDESTRIAN PUSH BUTTON, PEDESTAL MOUNTED
- PEDESTRIAN PUSH BUTTON, POLE MOUNTED

REV.	DATE	REVISION DESCRIPTION
2	4-2014	ADDED PEDESTRIAN EXAMPLE ALIGNMENTS
1	4-2012	MINOR REVISIONS & UPDATED SIGN #31-0845.

THE INFORMATION, INCLUDING ESTIMATED QUANTITIES OF WORK, SHOWN ON THESE SHEETS IS BASED ON LIMITED INVESTIGATIONS BY THE STATE AND IS IN NO WAY WARRANTED TO INDICATE THE CONDITIONS OF ACTUAL QUANTITIES OF WORK WHICH WILL BE REQUIRED.

Plotted Date: 4/25/2014

DIMENSIONS ARE IN ENGLISH (.") & METRIC UNITS (mm). METRIC DIMENSIONS ARE ROUNDED:
- OVER 1" TO NEAREST 5 mm
- UNDER 1" TO NEAREST 1 mm.

NOT TO SCALE

STATE OF CONNECTICUT
DEPARTMENT OF TRANSPORTATION

Filename: CTDOT_TRAFFIC_STD.DGN Model: TR-1107_01

SUBMITTED BY: NAME/DATE/TIME: Tracy L. Fogarty, P.E. 2014.04.25 16:01:49-04'00'
APPROVED BY: NAME/DATE/TIME: Digitally signed by Charles S. Harlow, P.E. Date: 2014.04.29 14:27:01-04'00'

CTDOT STANDARD SHEET
OFFICE OF ENGINEERING

STANDARD SHEET TITLE: **PEDESTRIAN PUSH BUTTONS**

STANDARD SHEET NO.: TR-1107_01

SVIGALS + PARTNERS
84 Orange Street + New Haven, Connecticut
203.786.5110 + www.svigals.com

Tighe&Bond
www.tighebond.com
1000 Bridgeport Avenue
Suite 320
Shelton, CT 06484
(203) 712-1100

REVISION LOG:

No.	Description	Date

PROJECT NAME:
ENGINEERING & SCIENCE UNIVERSITY MAGNET SCHOOL

500 BOSTON POST ROAD
WEST HAVEN, CONNECTICUT 06516

PHASE:
CONSTRUCTION DOCUMENTS
PHASE 2 OF 3

DRAWING TITLE:
CONCRETE HANDHOLE

SCALE: AS NOTED
DATE: JULY 11, 2013
JOB NUMBER: S1732
SDE NUMBER: 093-0357 MAG/N

DRAWING NUMBER:
TR-1107_01

7/18/2013 5:53:25 PM

Jan 18, 2014-11:43am Plotted By: rmv
Tighe & Bond, Inc. J:\S\S1732 Svigals ES\MS\DRAWINGS\0_CurrentDrawings\DS-S1732-01.dwg

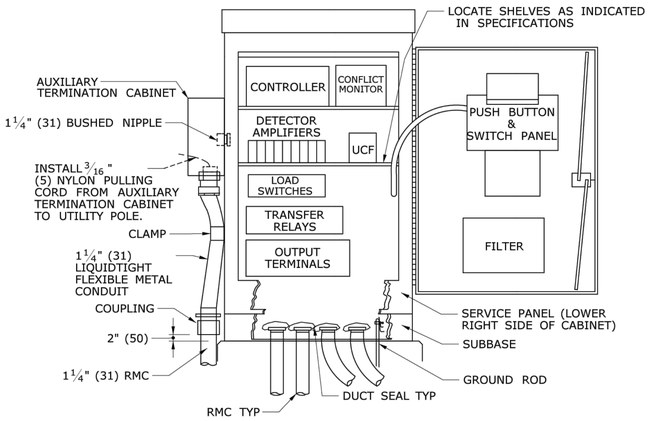

PROVIDE A MINIMUM CLEARANCE OF 6" (150) FROM THE CABINET BASE TO ALL COMPONENTS AND TERMINALS.

TYPICAL BASE MOUNTED CONTROLLER ON TYPE IV FOUNDATION

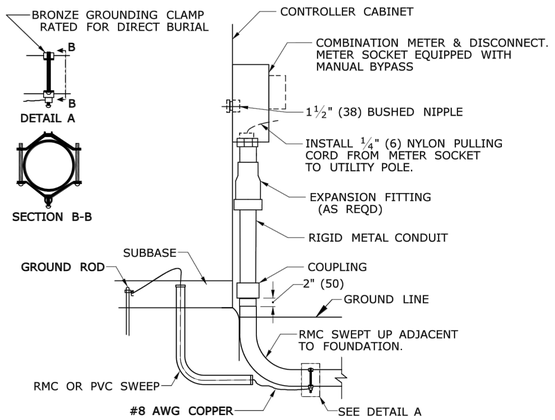

CONTROLLER CABINET WITH METERED SERVICE

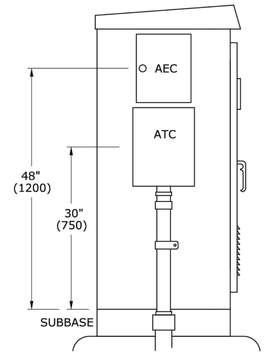

AUXILIARY EQUIPMENT CABINET (AEC)
AUXILIARY TERMINATION CABINET (ATC)

CABINET TYPE	HEIGHT	WIDTH	DEPTH
ATC	16"(400)	12"(300)	6"(150)
AEC	14"(350)	11"(275)	11"(275)

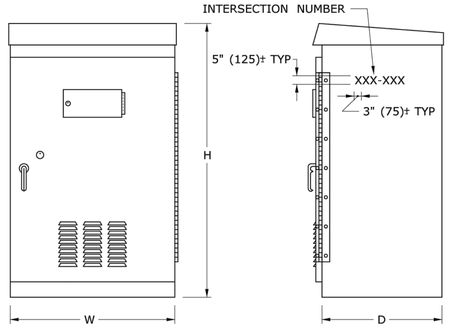

BASE MOUNTED TRAFFIC CONTROLLER (TYPE B, D & E)

CABINET TYPE	DEPTH		WIDTH		HEIGHT	
	MIN	MAX	MIN	MAX	MIN	MAX
B	17" (425)	19" (475)	30" (750)	34" (850)	52" (1300)	56" (1400)
D	25" (625)	27" (675)	42" (1050)	45" (1125)	54" (1350)	59" (1475)
E	17" (425)	19" (475)	30" (750)	32" (800)	49" (1225)	52" (1300)

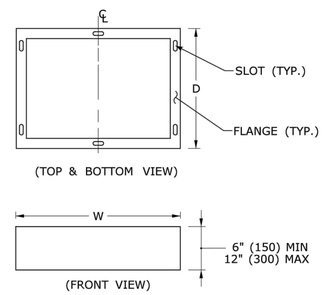

SUBBASE

SLOT AND FLANGE DIMENSIONS TO BE PER MANUFACTURER.

GENERAL NOTES:

GROUT ALL BASES AFTER MOUNTING ON FOUNDATIONS, WHERE NECESSARY.
3'-0" (900) FROM SIDEWALK TO BOTTOM OF CONTROLLER.
INSTALL PEDESTALS AND POLES SO THAT DOORS AND COVERS ARE ON THE SIDE AWAY FROM THE STREET, UNLESS OTHERWISE SPECIFIED.
INSTALL CABINET SO THAT DOOR OPENS FIELD SIDE UNLESS OTHERWISE NOTED ON PLANS.
CAULK SEAM BETWEEN SUBBASE AND FOUNDATION.
STENCIL SIX DIGIT INTERSECTION NUMBER, USING BLACK PAINT ON SIDE, FRONT OR BACK OF CABINET MOST VISIBLE FROM THE ROAD.

LEGEND AS SHOWN ON TRAFFIC CONTROL SIGNAL PLAN:
CONTROLLER ASSEMBLY
AUXILIARY EQUIPMENT CABINET
AUXILIARY TERMINTION CABINET

REV.	DATE	REVISION DESCRIPTION
2	5-2013	REVISED SUBBASE.
1	4-2012	REVISED CABINET TYPES & MINOR REVISIONS.

THE INFORMATION, INCLUDING ESTIMATED QUANTITIES OF WORK, SHOWN ON THESE SHEETS IS BASED ON LIMITED INVESTIGATIONS BY THE STATE AND IS IN NO WAY WARRANTED TO INDICATE THE CONDITIONS OF ACTUAL QUANTITIES OF WORK WHICH WILL BE REQUIRED.

Plotted Date: 5/15/2013

DIMENSIONS ARE IN ENGLISH ('.") & METRIC UNITS (mm). METRIC DIMENSIONS ARE ROUNDED: - OVER 1" TO NEAREST 5 mm - UNDER 1" TO NEAREST 1 mm.

NOT TO SCALE

STATE OF CONNECTICUT
DEPARTMENT OF TRANSPORTATION

Filename: CTDOT_TRAFFIC_STD.dgn Model: TR-1108_01

SUBMITTED BY: NAME/DATE/TIME: Tracy L. Fogarty 2013.07.29 14:04:24-04'00'
APPROVED BY: NAME/DATE/TIME: Charles S. Harlow 2013.07.29 14:59:45-04'00'

CTDOT STANDARD SHEET
OFFICE OF ENGINEERING

STANDARD SHEET TITLE: CONTROLLERS

STANDARD SHEET NO.: TR-1108_01

SVIGALS + PARTNERS
84 Orange Street + New Haven, Connecticut
203.786.5110 + www.svigals.com

Tighe&Bond
www.tighebond.com
1000 Bridgeport Avenue
Suite 320
Shelton, CT 06484
(203) 712-1100

REVISION LOG:

No.	Description	Date

PROJECT NAME:
ENGINEERING & SCIENCE UNIVERSITY MAGNET SCHOOL
500 BOSTON POST ROAD
WEST HAVEN, CONNECTICUT 06516

PHASE:
CONSTRUCTION DOCUMENTS PHASE 2 OF 3

DRAWING TITLE:
CONTROLLERS

SCALE: AS NOTED
DATE: JULY 11, 2013
JOB NUMBER: S1732
SDE NUMBER: 093-0357 MAG/N

DRAWING NUMBER:
TR-1108_01

7/18/2013 5:53:25 PM

Jun 18, 2014-11:43am Plotted By: rmr
Tighe & Bond, Inc. J:\S\S1732 Svigals ESUMS\DRAWINGS\0_Current\Drawings\DS-S1732-01.dwg

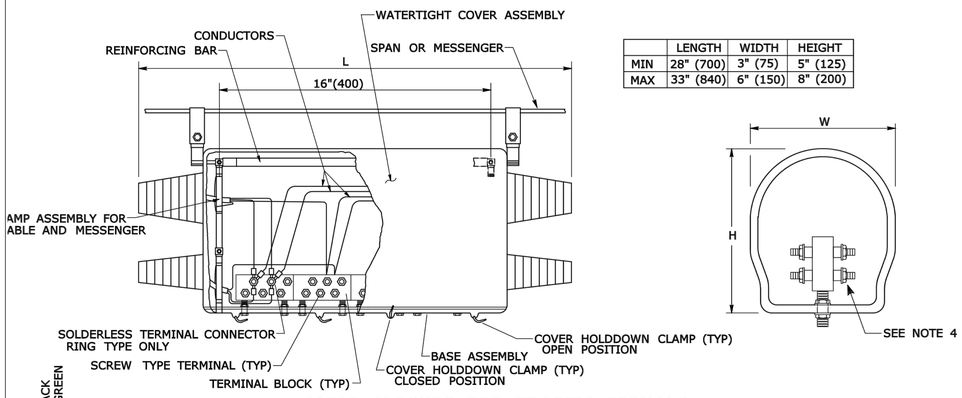

	LENGTH	WIDTH	HEIGHT
MIN	28" (700)	3" (75)	5" (125)
MAX	33" (840)	6" (150)	8" (200)

CABLE CLOSURE FOR TRAFFIC SIGNALS

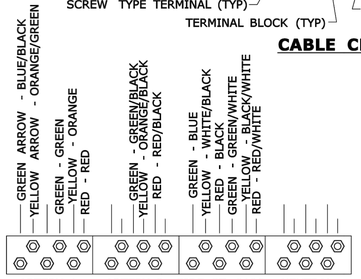

RECOMMENDED CONNECTION OF 21 CONDUCTOR CABLE IN CLOSURE

NOTES:

1. PROVIDE A MINIMUM OF FOUR TERMINAL BLOCKS WITH SEPARATE SCREW TYPE TERMINALS, SIX ON EACH SIDE.
2. INSTALL SEPARATE CABLE BETWEEN CLOSURE & EACH TRAFFIC SIGNAL ASSEMBLY. WIRE EACH TRAFFIC SIGNAL SECTION SEPARATELY BACK TO CABLE CLOSURE. JUMPERS BETWEEN TERMINALS ARE NOT ALLOWED EXCEPT ON NEUTRAL CONDUCTORS.
3. WIRE ALL SIGNALS, SAME DIRECTION FROM CONTROLLER, SEPARATELY WITH CONDUCTORS IN 21 OR 25 CONDUCTOR CABLE, EVEN IF INDICATIONS ARE IDENTICAL.
4. PREVENT CONNECTORS, TERMINAL POSTS AND CONDUCTORS FROM CONTACT WITH CLOSURE COVER AND SECURELY WRAP WITH ELECTRICAL TAPE OR RUBBER MASTIC TAPE.
5. CABLES THAT FEED PEDESTRIAN INDICATIONS, PUSH BUTTONS, AND DETECTORS BYPASS CABLE CLOSURE.
6. INSTALL TRAFFIC SIGNAL CABLE CLOSURE ON THE SPAN ±5' (±1.5 m) FROM CURBLINE.

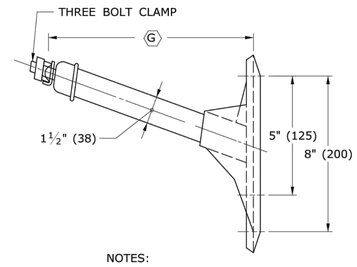

NOTES:

⅝" (16) THROUGH BOLT IN TOP HOLE.
½" (13) X 4" (100) LAG BOLT IN BOTTOM HOLE.
(G) LENGTH REQUIRED TO PROVIDE CLEARANCE IN ACCORDANCE WITH PURA CONSTRUCTION STANDARD SECTION 16.243.

COMMUNICATION CABLE EXTENSION BRACKET

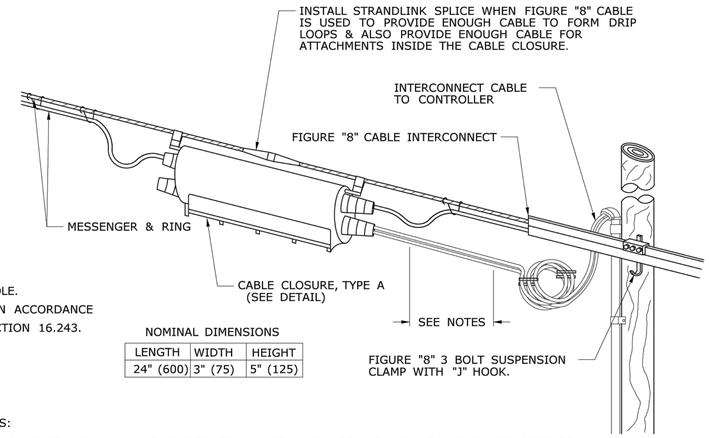

NOMINAL DIMENSIONS

LENGTH	WIDTH	HEIGHT
24" (600)	3" (75)	5" (125)

NOTES:

CABLE LENGTH IS SHOWN EXTENDED TO CLARIFY DRIP LOOP LEADING TO ENTRANCE FITTINGS.
WHEN CABLE IS TOO LARGE TO FORM DRIP LOOPS, INSTALL DIRECTLY INTO CLOSURE WITHOUT DRIP LOOPS.

OVERHEAD INTERCONNECT INSTALLATION

BONDING AND GROUNDING REQUIREMENTS FOR COMMUNICATION CABLES

1. PLACE BOND ON STRAND USING #6 AWG LEAVE COIL OF SUFFICIENT LENGTH TO REACH THE NEXT STRAND AT ALL OF THE FOLLOWING LOCATIONS:
   A. FIRST POLE
   B. LAST POLE
   C. JUNCTION POLE
   CONTACT THE UTILITY THAT OWNS THE NEXT STRAND TO COMPLETE THE BOND.
2. LEAVE COIL #6 AWG WIRE ATTACHED TO CABLE STRAND OF SUFFICIENT LENGTH TO REACH VERTICAL GROUNDING CONDUCTOR AT LEAST EVERY 10 POLES. NOTIFY ELECTRIC COMPANY TO MAKE ATTACHMENT TO GROUNDING CONDUCTOR.

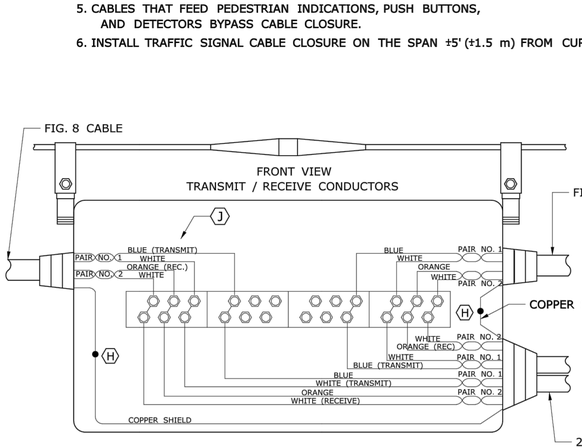

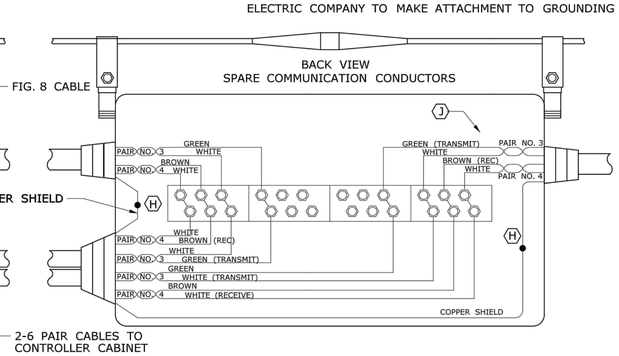

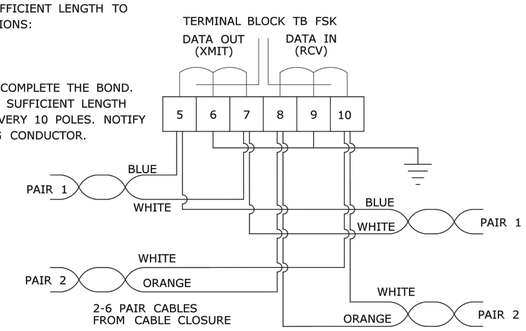

NOTES:

CONNECT SHIELDS TO GROUND ONLY AT EVERY OTHER CABINET, LEAVE SHIELD OPEN AT ALTERNATE CABINETS.
TAG 6 PAIR CABLES WITH INTERSECTION DESTINATION.
SPARE PAIRS TO BE FOLDED BACK AND NEATLY TIED ADJACENT TO TERMINAL BLOCK.

TYPICAL COMMUNICATION CABLE CONNECTION IN CONTROLLER CABINET

FIG. 8 CABLE			
PAIR #	DOT SPARE	PAIR #	MUNICIPAL SPARES
3	GREEN - WHITE	5	SLATE - WHITE
4	BROWN - WHITE	6	BLUE - RED

6 PAIR, CABLE	
PAIR #	DOT SPARE
5	SLATE - WHITE
6	BLUE - RED

NOTES:

SPARE PAIRS TO BE FOLDED BACK AND NEATLY TIED. GROUP MUNICIPAL SPARES TOGETHER, SEPARATE FROM THOSE RESERVED FOR D.O.T. MUNICIPAL SPARES ARE NOT TO BE CUT.
DO NOT BOND THE CABLE SHEATH TO THE SUPPORT STRAND.
(H) CONNECT ONLY TO SHIELD OF CORRESPONDING 6 PAIR CABLE.
(J) WHEN CONNECTING TO AN EXISTING SYSTEM, VERIFY COLOR CODE OF TRANSMIT AND RECEIVE CONDUCTORS.

TYPICAL COMMUNICATION CABLE CONNECTION IN CABLE CLOSURE, TYPE A

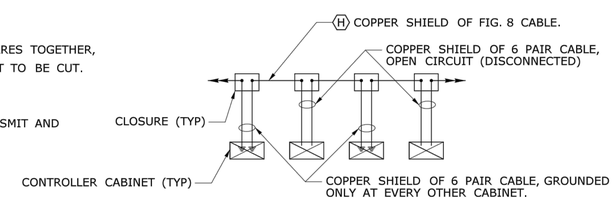

END AS SHOWN ON TRAFFIC CONTROL SIGNAL PLAN:
- PROPOSED UTILITY POLE
- EXISTING UTILITY POLE
- POLE ANCHOR & GUY
- CABLE CLOSURE

REV.	DATE	REVISION DESCRIPTION
	4-2014	ADDED CABLE CLOSURE FOR TRAFFIC SIGNALS, NOTE #6.
	4-2012	MINOR REVISIONS.

THE INFORMATION, INCLUDING ESTIMATED QUANTITIES OF WORK, SHOWN ON THESE SHEETS IS BASED ON LIMITED INVESTIGATIONS BY THE STATE AND IS IN NO WAY WARRANTED TO INDICATE THE CONDITIONS OF ACTUAL QUANTITIES OF WORK WHICH WILL BE REQUIRED.

Plotted Date: 4/12/2014

DIMENSIONS ARE IN ENGLISH (:") & METRIC UNITS (mm).
METRIC DIMENSIONS ARE ROUNDED:
- OVER 1" TO NEAREST 5 mm
- UNDER 1" TO NEAREST 1 mm.

NOT TO SCALE

STATE OF CONNECTICUT
DEPARTMENT OF TRANSPORTATION

Filename: CTDOT_TRAFFIC_STD.DGN Model: TR-1113_01

SUBMITTED BY: NAME/DATE/TIME: Tracy L. Fogarty, P.E. 2014.04.25 16:02:38-04'00'
APPROVED BY: NAME/DATE/TIME: Digitally signed by Charles S. Harlow, P.E. Date: 2014.04.29 14:31:58-04'00'

CTDOT STANDARD SHEET
OFFICE OF ENGINEERING

STANDARD SHEET TITLE: CONTROL CABLE

STANDARD SHEET NO.: TR-1113_01

SVIGALS + PARTNERS
84 Orange Street + New Haven, Connecticut
203.786.5110 + www.svigals.com

Tighe&Bond
www.tighebond.com
1000 Bridgeport Avenue
Suite 320
Shelton, CT 06484
(203) 712-1100

REVISION LOG:

No.	Description	Date

PROJECT NAME:
ENGINEERING & SCIENCE UNIVERSITY MAGNET SCHOOL
500 BOSTON POST ROAD
WEST HAVEN, CONNECTICUT 06516

PHASE:
CONSTRUCTION DOCUMENTS
PHASE 2 OF 3

DRAWING TITLE:
CONTROL CABLE

SCALE:	DATE:
AS NOTED	JULY 11, 2013
JOB NUMBER: S1732	SDE NUMBER: 093-0357 MAG/N

DRAWING NUMBER:
TR-1113_01

Jun 18, 2014-11:43am Plotted By: rmr
Tighe & Bond, Inc. J:\S\S1732 Svigals ESUMS\DRAWINGS\0_Current\Drawings\DS-S1732-01.dwg

7/18/2013 5:53:25 PM

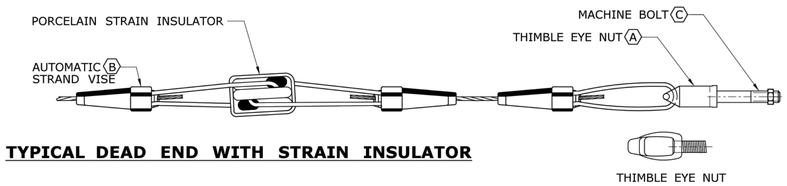

TYPICAL DEAD END WITH STRAIN INSULATOR

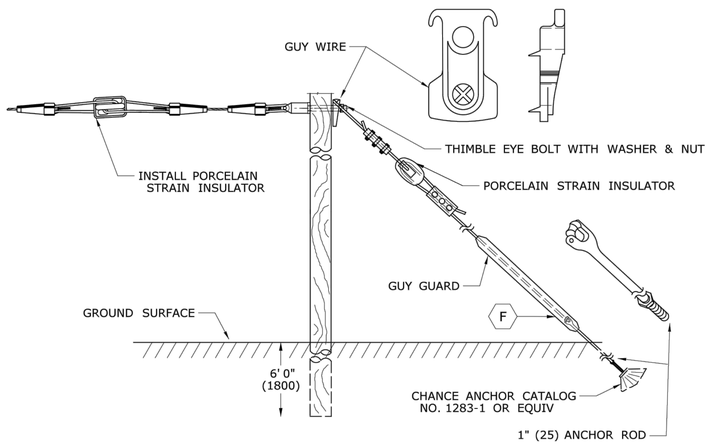

TYPICAL SPAN WIRE TO WOOD POLE INSTALLATION

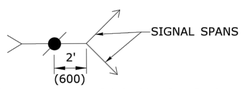

SIGNAL SPANS TO BE ATTACHED USING ONE "EYE" BOLT WITH A 2' (600) PULL OFF AND IN LINE WITH GUY WIRE.

TYPICAL SIGNAL "Y" SPAN ATTACHMENT TO WOOD POLE INSTALLATION

TOP VIEW

NOTES:

- INSTALLATION SHALL CONFORM TO DEPARTMENT OF PUBLIC UTILITY CONTROL, REGULATIONS SECTION 16-243 WITH APPENDIX PLATES AND CURRENT NESC REQUIREMENTS.

(A) THIMBLE EYE BOLT OR THIMBLE EYE NUT WITH MACHINE BOLT ONLY. STANDARD OR OVAL EYE BOLTS OR NUTS ARE NOT ACCEPTABLE.

(B) PREFORMED GUY GRIP MAY BE SUBSTITUTED FOR STRAND VICE.

(C) ANGLE THIMBLE EYE BOLTS ARE NOT ACCEPTABLE FOR DOWN GUY ATTACHMENT.

(D) SCREW OR EXPANSION ANCHOR MAY BE USED TO MINIMIZE EXCAVATION.

(E) USE ENTIRE 10' (3000) LENGTH OF 2" (50) PIPE IF POSSIBLE. MAY BE REDUCED TO KEEP ANCHOR OUTSIDE OF PRIVATE PROPERTY.

(F) USE AUTOMATIC GUY STRAND DEAD END AT ANCHOR END OF GUY.

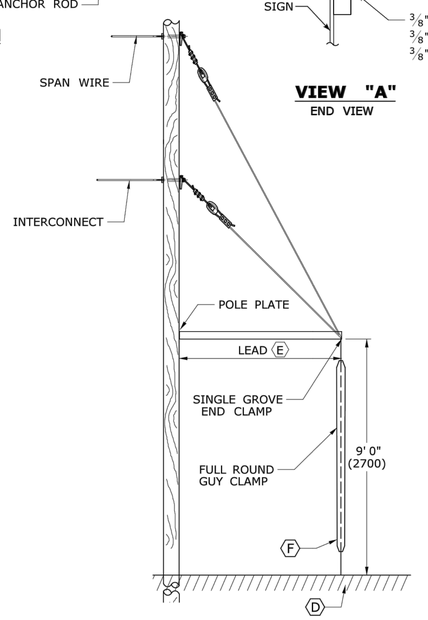

SIDEWALK ANCHOR

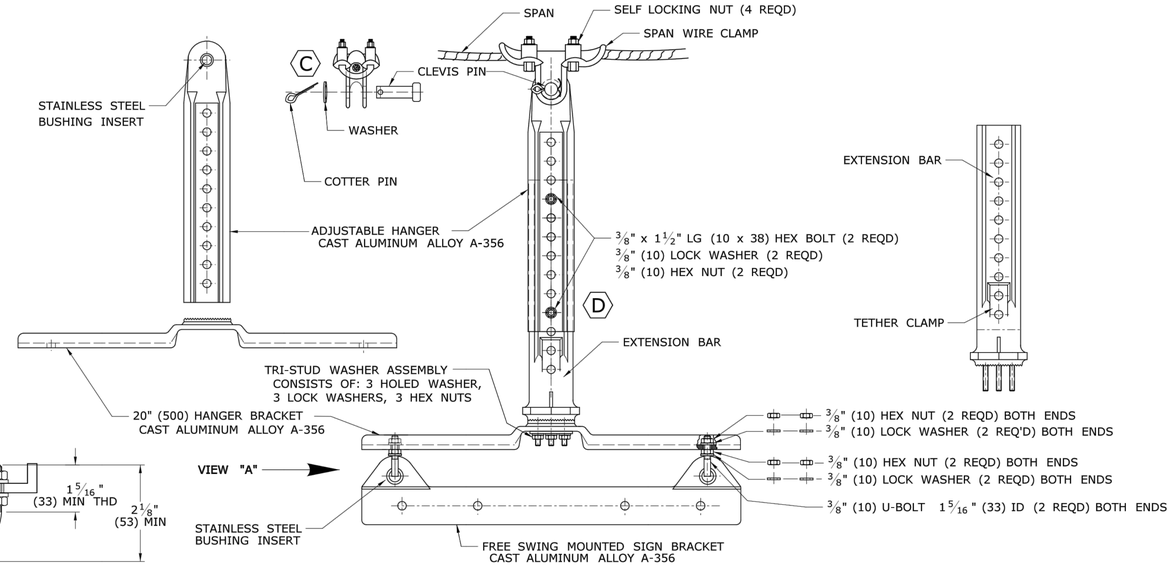

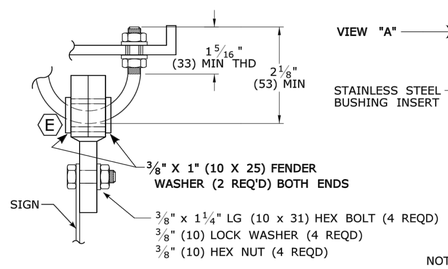

VIEW "A"

END VIEW

FREE SWINGING SPAN MOUNTED SIGN HANGER ASSEMBLY

NOTES:

ALL STAINLESS STEEL HARDWARE: BOLTS, NUTS, WASHERS, CLEVIS PIN, COTTER PIN, ETC.

(C) INSTALL CLEVIS PIN SO THAT THE WASHER AND COTTER PIN ARE ON SIDE OF HANGER AWAY FROM SIGNAL CABLES.

(D) OVERLAP MAXIMUM NUMBER OF HOLES SEAT SNUGGLY ON EXTENSION BAR. LEAVE BOTTOM HOLE OPEN FOR TETHER CLAMP.

(E) INSTALL FENDER WASHER ON U-BOLT, ON BOTH ENDS, ON BOTH SIDES OF SIGN BRACKET.

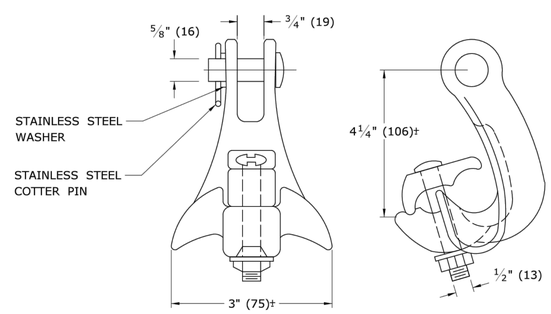

TANGENT "Y" SPAN CLAMP DETAIL

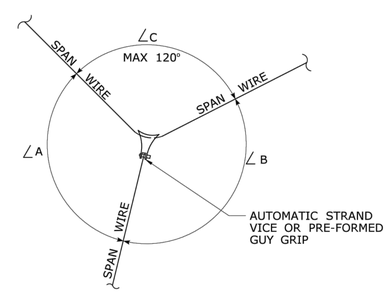

CLAMP ORIENTATION DETAIL

NOTES:

MINIMUM 11,000 LBS. (10.7 kN) BREAKING STRENGTH.

CLAMP SMALLEST ANGLE OF Y CONNECTION.

∠A ≈ ∠B SO PULL-OFF BISECTS ∠C.

LEGEND AS SHOWN ON TRAFFIC CONTROL SIGNAL PLAN:

SPAN MOUNTED SIGN

REV.	DATE	REVISION DESCRIPTION
2	4-2014	ADDED SIGNAL "Y" SPAN ATTACHMENT DETAIL.
1	4-2012	INCLUDED SIGN HANGER BOLTS, REMOVED AUDIBLE PED.
		SIGNAL & RENUMBERED STANDARD SHEET (FROM TR-1107_02).

THE INFORMATION, INCLUDING ESTIMATED QUANTITIES OF WORK, SHOWN ON THESE SHEETS IS BASED ON LIMITED INVESTIGATIONS BY THE STATE AND IS IN NO WAY WARRANTED TO INDICATE THE CONDITIONS OF ACTUAL QUANTITIES OF WORK WHICH WILL BE REQUIRED.

Plotted Date: 4/12/2014

DIMENSIONS ARE IN ENGLISH ('.") & METRIC UNITS (mm). METRIC DIMENSIONS ARE ROUNDED: - OVER 1" TO NEAREST 5 mm - UNDER 1" TO NEAREST 1 mm.

NOT TO SCALE

STATE OF CONNECTICUT
DEPARTMENT OF TRANSPORTATION

Filename: CTDOT_TRAFFIC_STD.DGN Model: TR-1114_01

SUBMITTED BY: NAME/DATE/TIME: Tracy L. Fogarty, P.E. 2014.04.25 16:03:32-04'00'

APPROVED BY: NAME/DATE/TIME: Digitally signed by Charles S. Harlow, P.E. Date: 2014.04.29 14:32:43-04'00'

CTDOT STANDARD SHEET

OFFICE OF ENGINEERING

STANDARD SHEET TITLE: POLE ANCHOR, "Y" CLAMP, SIGN HANGER

STANDARD SHEET NO.: TR-1114_01

SVIGALS + PARTNERS
84 Orange Street + New Haven, Connecticut
203.786.5110 + www.svigals.com

Tighe&Bond
www.tighebond.com
1000 Bridgeport Avenue
Suite 320
Shelton, CT 06484
(203) 712-1100

REVISION LOG:

No.	Description	Date

PROJECT NAME:

ENGINEERING & SCIENCE UNIVERSITY MAGNET SCHOOL

500 BOSTON POST ROAD
WEST HAVEN, CONNECTICUT 06516

PHASE:

CONSTRUCTION DOCUMENTS PHASE 2 OF 3

DRAWING TITLE:

POLE ANCHOR, "Y" CLAMP, SIGN HANGER

SCALE:	DATE:
AS NOTED	JULY 11, 2013
JOB NUMBER: S1732	SDE NUMBER: 093-0357 MAG/N

DRAWING NUMBER:

TR-1114_01

7/18/2013 5:53:25 PM

Jun 18, 2014-11:43am Plotted By: rmv
Tighe & Bond, Inc. J:\S\S1732 Svigals ESUMS\DRAWINGS\0_Current\Drawings\DS-S1732-01.dwg

DELINEATORS DE-1, DE-2, DE-3

INSTALLATION ON DELINEATOR POSTS

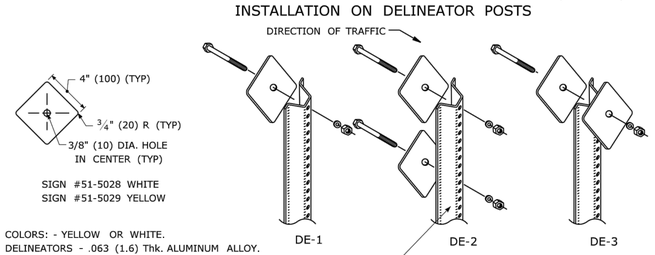

INSTALLATION ON PERMANENT CONCRETE BARRIER, BRIDGE PARAPETS & RETAINING WALLS

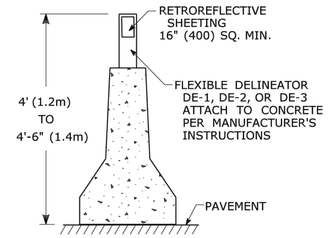

COLORS: - YELLOW OR WHITE.
DELINEATORS - .063 (1.6) Thk. ALUMINUM ALLOY.
FACE SHALL BE PRESSURE SENSITIVE, SELF ADHERING, TYPE IV OR BRIGHT WIDE ANGLE RETROREFLECTIVE SHEETING.
DELINEATORS SHALL BE FASTENED WITH 5/16" (8) STAINLESS STEEL ASTM A-193 CLASS 1, GRADE B8 (TYPE 304) OR BETTER HEX HEAD BOLT (LENGTH AS REQUIRED), WASHER AND FIBER INSERT SELF LOCKING NUT, ON STANDARD METAL DELINEATOR POST.

DELINEATORS DE-1, DE-2, DE-3 TO BE PAID FOR UNDER SECTION 12.05 DELINEATORS.

DELINEATORS DE-4, DE-4A, DE-5
FOR INSTALLATION ON METAL BRIDGE RAIL

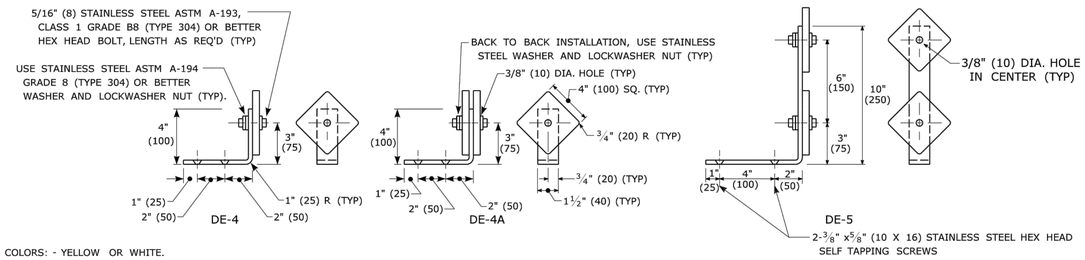

COLORS: - YELLOW OR WHITE.
DELINEATORS - .063 (1.6) Thk. ALUMINUM ALLOY.
BRACKET - .125 (3.2) Thk. ALUMINUM ALLOY, AND SHALL CONFORM TO SPECIFICATION M.18.07-03 BRIDGE RAIL MOUNTING BRACKETS.
FACE SHALL BE PRESSURE SENSITIVE, SELF ADHERING, TYPE IV OR BRIGHT WIDE ANGLE RETROREFLECTIVE SHEETING.
USE STAINLESS STEEL WASHERS ON FACE OF DELINEATORS, 5/8 " (16) O.D. X 3/8 " (10) I.D. X .032 (0.8) Thk. (TYPICAL).

DELINEATORS TYPE DE-4, DE-4A, AND DE-5 TO BE PAID FOR UNDER SECTION 12.05 DELINEATORS.

TYPICAL MAINLINE & INTERCHANGE DELINEATION

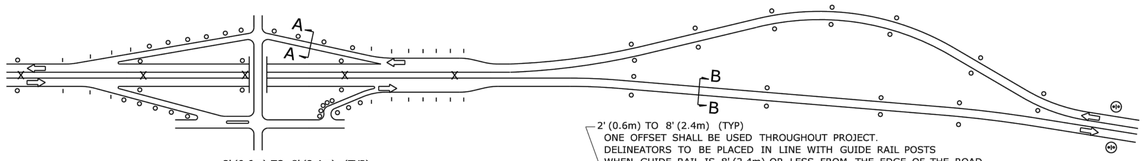

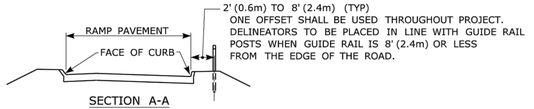

SECTION A-A
DELINEATOR PLACEMENT ON RAMPS
ON TANGENT SECTIONS - RIGHT SIDE OF RAMP
ON CURVED SECTIONS - BOTH SIDES OF CURVE

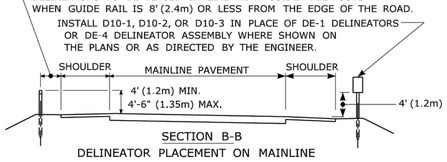

SECTION B-B
DELINEATOR PLACEMENT ON MAINLINE

DELINEATOR SPACING NOTES:

1) AT LOCATIONS WHERE THE MEDIAN WIDTH (BETWEEN SHOULDERS) IS 12' (3.6m) OR LESS, AND MEDIAN BEAM RAIL IS PRESENT, TYPE DE-3 DELINEATORS SHALL BE MOUNTED WITHIN THE MEDIAN BEAM RAIL..
2) SPACING ON MAINLINE EXPRESSWAY TANGENTS SHALL BE 400' (120m).
3) SPACING ON MAINLINE EXPRESSWAY CURVES SHALL BE AS SPECIFIED IN TABLE 3D-1 OF THE MUTCD.
4) ON ACCELERATION AND DECELERATION LANES AND ON-RAMP TANGENT SECTIONS, DELINEATOR SPACING SHALL BE 100' (30m).
5) ON CURVED PORTIONS OF RAMPS, DELINEATOR SPACING SHALL BE IN ACCORDANCE WITH TABLE 3D-1 OF THE MUTCD, BUT NOT TO EXCEED 100' (30m).

LEGEND:

- DE-1 DELINEATORS OR DE-4 DELINEATOR ASSEMBLY
- DE-2 DELINEATORS OR DE-5 DELINEATOR ASSEMBLY
- X DE-3 DELINEATORS ASSEMBLY OR DE-4A DELINEATOR
- (D) D10-1, 2, OR 3 ASSEMBLY TO BE INSTALLED WHERE SHOWN ON PLANS OR AS DIRECTED BY THE ENGINEER.

COLOR APPLICATION, FOR DE-1 THRU DE-5

LEFT SIDE OF ALL ROADWAYS AND RAMPS - YELLOW
RIGHT SIDE OF ALL ROADWAYS AND RAMPS - WHITE

MUTCD TABLE 3D-1
APPROXIMATE SPACING FOR DELINEATORS ON HORIZONTAL CURVES

RADIUS (R) OF CURVE (feet)	APPROXIMATE SPACING (S) ON CURVE (feet)	RADIUS (R) OF CURVE (m)	APPROXIMATE SPACING (S) ON CURVE (m)
50	20	15	6
115	25	35	8
180	35	55	11
250	40	75	13
300	50	95	15
400	55	125	18
500	65	155	20
600	70	185	22
700	75	215	24
800	80	245	26
900	85	275	27
1,000	90	305	29

DISTANCE IN FEET (m) WERE ROUNDED TO THE NEAREST 5 FEET (1.5m) SPACING FOR SPECIFIC RADII MAY BE INTERPOLATED FROM TABLE. THE MINIMUM SPACING SHOULD BE 20 FT (6.1m) THE SPACING ON CURVES SHOULD NOT EXCEED 300 FT (90 m). IN ADVANCE OF OR BEYOND A CURVE AND PROCEEDING AWAY FROM THE END OF THE CURVE, THE SPACING OF THE FIRST DELINEATOR IS 2S. THE SECOND IS 3S, AND THE THIRD 6S BUT NOT TO EXCEED 300 FT (90m)
S REFERS TO THE DELINEATOR SPACING FOR SPECIFIC RADII COMPUTED FROM THE FORMULA: $S=3\sqrt{R-50}$ $(S=1.7\sqrt{R-15})$.

DELINEATORS DE-7, DE-7A, DE-7B, DE-7C
FOR INSTALLATION ON TEMPORARY PRECAST CONCRETE BARRIER CURB AND TEMPORARY PRECAST CONCRETE BARRIER CURB (STRUCTURE)

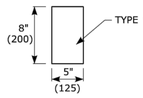

DE-7 ONE WAY WHITE
DE-7A ONE WAY YELLOW
DE-7B TWO WAY YELLOW
DE-7C WHITE/YELLOW BACK TO BACK
TEMPORARY PRECAST CONCRETE BARRIER DELINEATORS ARE TO BE FABRICATED OF ALUMINUM, STEEL, PLASTIC, OR OF A MATERIAL APPROVED BY THE ENGINEER AND MOUNTED IN THE CENTER OF EACH SECTION OF TEMPORARY BARRIER AS REQUIRED AND PER MANUFACTURER'S INSTRUCTIONS.

SPACING FOR TEMPORARY BARRIER CURB DELINEATORS:

ON THE LEADING TAPERED SECTION - EVERY 20' (6.2m),
ON THE FIRST 100' (30m) OF THE PARALLEL SECTION - EVERY 20' (6.2m),
ON THE REMAINING LENGTH - EVERY 100' (30m), MINIMUM OF 2 IF LESS THAN 100' (30m),
ALTERNATING ONE WAY TRAFFIC - EVERY 20' (6.2m),
ALL OTHER ROADWAYS SHALL BE DELINEATED IN ACCORDANCE WITH MUTCD.

DELINEATORS DE-7, DE-7A, DE-7B, DE-7C TO BE PAID FOR UNDER SECTION 12.05 DELINEATORS.

DELINEATORS D10-1, D10-2, D10-3
MILE POST MARKER ASSEMBLY

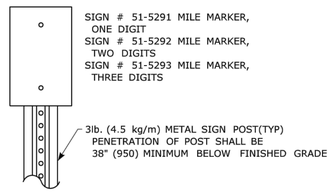

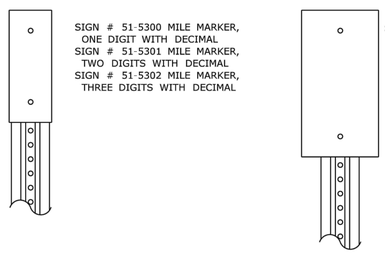

MILE POST MARKER ASSEMBLY TO BE PAID FOR UNDER SECTION 12.08 SIGN FACE SHEET ALUMINUM

DIRECTION OF TRAVEL
ATTENUATOR REFLECTOR
SIGN # 50-5032

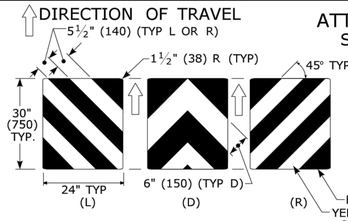

THIS SHEETING TO BE INSTALLED ON THE NOSE OF THE IMPACT ATTENUATOR WITH ADHESIVE IN ACCORDANCE WITH THE MANUFACTURER'S RECOMMENDATIONS.
THE SHEETING SHALL COVER THE NOSE OF THE IMPACT ATTENUATOR.
ON A CURVED NOSE, THE WIDTH OF THE SHEETING SHALL EXTEND 1" (25) BEYOND THE POINT OF CURVATURE ON EACH SIDE OF THE NOSE.
THE HEIGHT AND WIDTH OF THE SHEETING VARIES DEPENDING ON THE SIZE OF THE NOSE OF THE IMPACT ATTENUATOR.

ATTENUATOR REFLECTOR TO BE PAID FOR UNDER SECTION 18.0 IMPACT ATTENUATOR

DELINEATOR DE-9
TYPE I OBJECT MARKER
SIGN # 51-5031

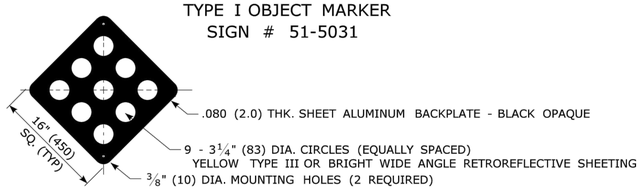

WHEN ERECTED AS A SEPARATE INSTALLATION A 3lb. (4.5kg/m) METAL SIGN POST SHALL BE USED. THE BOTTOM OF THE DE-9 SHALL BE 4' (1.2m) ABOVE THE ADJACENT PAVEMENT AND THE PENETRATION OF THE POST SHALL BE 38" (950 mm) MINIMUM BELOW THE FINISHED GRADE.

DELINEATORS DE-9 TO BE PAID FOR UNDER SECTION 12.05 DELINEATORS.

DIRECTION OF TRAVEL
TYPE 3 OBJECT MARKERS
SIGN # 51-5023

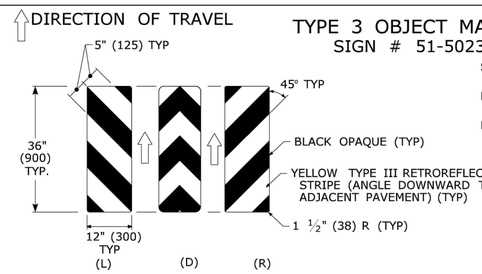

SIGN #51-5023 MARKER MOUNTED ON 3lb. (4.5kg/m) METAL SIGN POST
BOTTOM OF SIGN #51-5023 TO BE 4' (1.2m) ABOVE ADJACENT EDGE OF PAVEMENT
FINAL LOCATIONS OF SIGN #51-5023 MARKERS WILL BE AS SHOWN ON THE PLAN OR AS DIRECTED BY THE ENGINEER.

TYPE 3 OBJECT MARKER TO BE PAID FOR UNDER SECTION 12.08 SIGN FACE SHEET ALUMINUM

REV.	DATE	REVISION DESCRIPTION
2	2-2011	MINOR REVISIONS.
1	1-2010	INCLUDED DETAILS IN D10-1, D10-2, D10-3 DELINEATORS.

THE INFORMATION, INCLUDING ESTIMATED QUANTITIES OF WORK, SHOWN ON THESE SHEETS IS BASED ON LIMITED INVESTIGATIONS BY THE STATE AND IS IN NO WAY WARRANTED TO INDICATE THE CONDITIONS OF ACTUAL QUANTITIES OF WORK WHICH WILL BE REQUIRED.

Plotted Date: 3/22/2011

DIMENSIONS ARE IN ENGLISH (.") & METRIC UNITS (mm).
METRIC DIMENSIONS ARE ROUNDED:
- OVER 1" TO NEAREST 5 mm
- UNDER 1" TO NEAREST 1 mm.

NOT TO SCALE

STATE OF CONNECTICUT
DEPARTMENT OF TRANSPORTATION

Filename: CTDOT_TRAFFIC_STD.dgn Model: TR-1205_01

SUBMITTED BY: NAME/DATE/TIME:
Charles S. Harlow 2011.03.22 13:18:08 -04'00'
Joseph C. Cancelliere 2011.03.24 08:23:40 -04'00'
APPROVED BY: NAME/DATE/TIME:
John F. Carey 2011.03.24 09:51:45 -04'00'

CTDOT STANDARD SHEET
OFFICE OF ENGINEERING

STANDARD SHEET TITLE:
DELINEATION, DELINEATORS AND OBJECT MARKER DETAILS

STANDARD SHEET NO.:
TR-1205_01

SVIGALS + PARTNERS
84 Orange Street + New Haven, Connecticut
203.786.5110 + www.svigals.com

Tighe&Bond
www.tighebond.com
1000 Bridgeport Avenue
Suite 320
Shelton, CT 06484
(203) 712-1100

REVISION LOG:

No.	Description	Date

PROJECT NAME:
ENGINEERING & SCIENCE UNIVERSITY MAGNET SCHOOL

500 BOSTON POST ROAD
WEST HAVEN, CONNECTICUT 06516

PHASE:
CONSTRUCTION DOCUMENTS
PHASE 2 OF 3

DRAWING TITLE:
DELINEATION, DELINEATORS AND OBJECT MARKER DETAILS

SCALE:	DATE:
AS NOTED	JULY 11, 2013
JOB NUMBER: S1732	SDE NUMBER: 093-0357 MAG/N

DRAWING NUMBER:
TR-1205_01

7/18/2013 5:53:25 PM

Jun 18, 2014-11:43am Plotted By: rmc
Tighe & Bond, Inc. J:\S\S1732 Svigals ESUMS\DRAWINGS\0_Current\Drawings\DS-S1732-01.dwg

TYPICAL METAL SIGN POSTS

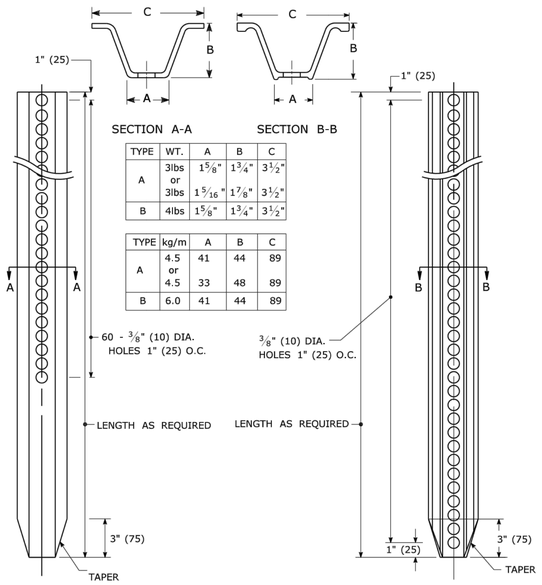

TYPE	WT.	A	B	C
A	3lbs or 3lbs	1 5/8"	1 3/4"	3 1/2"
		1 5/16"	1 7/8"	3 1/2"
B	4lbs	1 5/8"	1 3/4"	3 1/2"

TYPE	kg/m	A	B	C
A	4.5 or 4.5	41	44	89
		33	48	89
B	6.0	41	44	89

TYPICAL SIGN PANEL ATTACHMENT

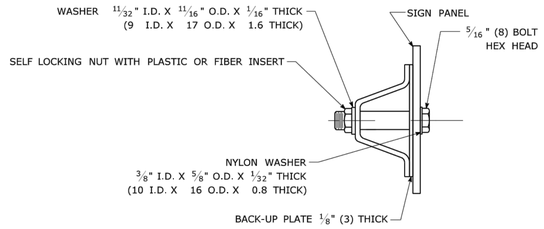

TYPICAL BACK TO BACK SIGN PANEL ATTACHMENT

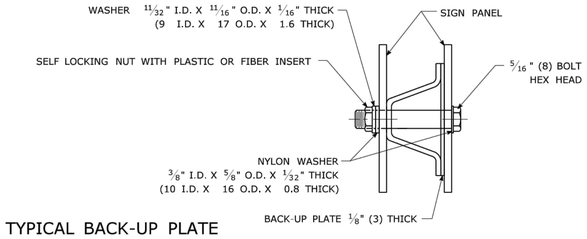

TYPICAL BACK-UP PLATE

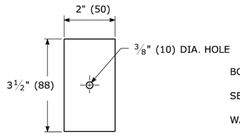

BOLTS - STAINLESS STEEL CONFORMING TO ASTM F593, ALLOY GROUP 1 OR 2 (ALLOY TYPES 304 OR 316).
SELF LOCKING NUTS - STAINLESS STEEL CONFORMING TO ASTM F594, ALLOY GROUP 1 OR 2 (ALLOY TYPES 304 OR 316).
WASHERS - STAINLESS STEEL CONFORMING TO ASTM A240, (ALLOY TYPES 304 OR 316).

METAL DELINEATOR POST

WT./FT. = 1.12 LBS. MIN.
(MASS/m = 1.67 kg/m MIN.)

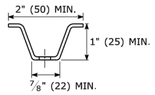

SECTION C-C

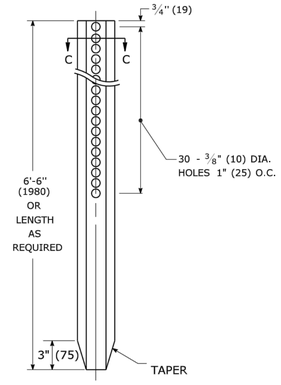

GENERAL NOTES:

1. STEEL FOR DELINEATOR POSTS SHALL BE ASTM A36/A36(m) STEEL. STEEL FOR ALL OTHER POSTS SHALL CONFORM TO THE MECHANICAL REQUIREMENTS OF ASTM A 499 GRADE 60 AND TO THE CHEMICAL REQUIREMENTS OF ASTM A1 CARBON STEEL TEE RAIL HAVING NOMINAL WEIGHT (MASS) OF 91lbs. (45 kg.) OR GREATER PER LINEAR YARD (METER).
2. AFTER FABRICATION, ALL STEEL POSTS, STRAPS AND PLATES SHALL BE GALVANIZED TO MEET THE REQUIREMENTS OF ASTM A123/A123(m).
3. WASHERS FOR BREAKAWAY INSTALLATIONS SHALL MEET ASTM F436, TYPE 1.
4. ALL BOLTS, NUTS, AND WASHERS FOR BREAKAWAY INSTALLATIONS SHALL BE GALVANIZED TO MEET THE REQUIREMENTS OF ASTM A153/A153(m).
5. ALL SIGN POSTS SHALL HAVE BREAKAWAY FEATURES THAT MEET AASHTO REQUIREMENTS CONTAINED IN THE CURRENT "STANDARD SPECIFICATIONS FOR STRUCTURAL SUPPORTS FOR HIGHWAY SIGNS, LUMINAIRES AND TRAFFIC SIGNALS." THE BREAKAWAY FEATURES SHALL BE STRUCTURALLY ADEQUATE TO CARRY THE SIGNS SHOWN IN THE PLANS AT 60 mph (97 km/h) WIND LOADINGS. INSTALLATIONS SHALL BE IN ACCORDANCE WITH MANUFACTURERS RECOMMENDATIONS.
6. TYPE A POSTS - 3 lbs/ft (4.5 kg/m) TYPE B POSTS - 4 lbs/ft (6 kg/m).

BREAKAWAY TYPE I INSTALLATION

FOR 3 & 4 LB. POSTS
(FOR 4.5 & 6.0 kg/m POSTS)

BOLTS - HEX HEAD, INTEGRAL FLANGE CONFORMING TO ASTM A354, SIZE IS 5/16" (8) - 18 UNC X 1 3/4" (44) GRADE BC FOR 3 LBS/FT (4.5kg/m) POSTS & 5/16" (8) - 18 UNC X 2" (50) GRADE BD FOR 4 LBS./FT (6.0 kg/m) POSTS.
NUTS - 5/16" (8) - 18 UNC HEX HEAD, INTEGRAL FLANGE CONFORMING TO ASTM A563, GRADE DH.
LOCKWASHERS - 3/8" (10) HEAVY DUTY EXTERNAL TYPE.

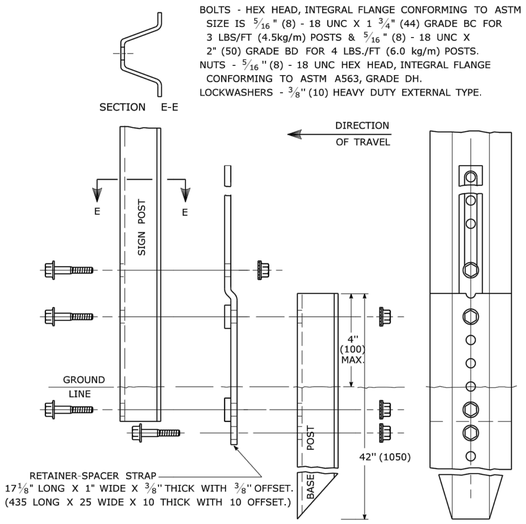

BREAKAWAY TYPE II INSTALLATION

FOR 3 & 4 LB. POSTS
(FOR 4.5 & 6.0 kg/m POSTS)

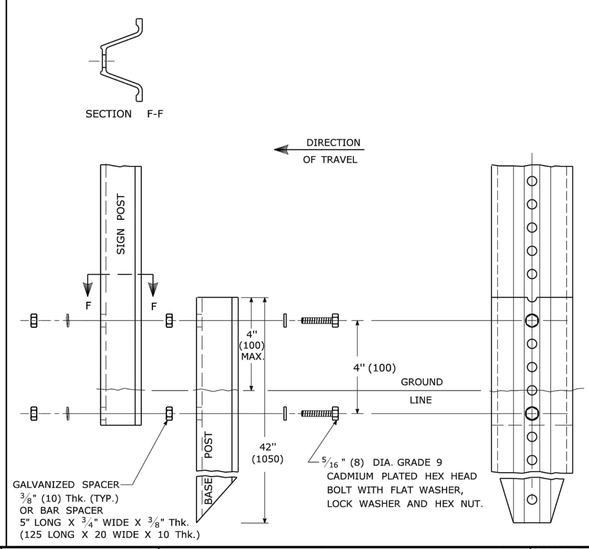

TYPICAL SLEEVE FOR PAVED AREAS

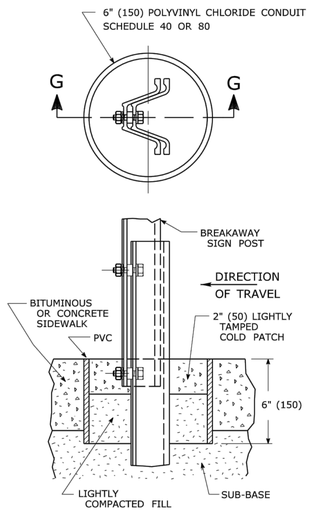

45° SUBMOUNTING BRACKET

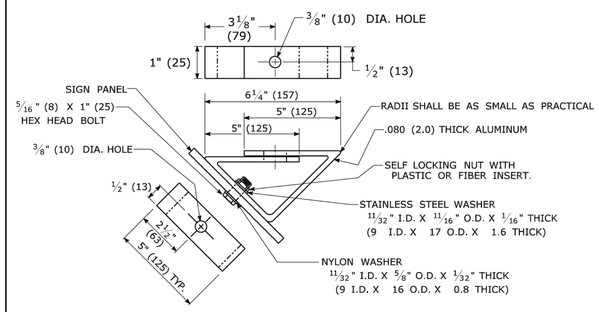

REV.	DATE	REVISION DESCRIPTION
1	2-2011	MINOR REVISIONS.

THE INFORMATION, INCLUDING ESTIMATED QUANTITIES OF WORK, SHOWN ON THESE SHEETS IS BASED ON LIMITED INVESTIGATIONS BY THE STATE AND IS IN NO WAY WARRANTED TO INDICATE THE CONDITIONS OF ACTUAL QUANTITIES OF WORK WHICH WILL BE REQUIRED.

Plotted Date: 3/22/2011

DIMENSIONS ARE IN ENGLISH (.") & METRIC UNITS (mm).
METRIC DIMENSIONS ARE ROUNDED:
- OVER 1" TO NEAREST 5 mm
- UNDER 1" TO NEAREST 1 mm.

NOT TO SCALE

STATE OF CONNECTICUT
DEPARTMENT OF TRANSPORTATION

Filename: CTDOT_TRAFFIC_STD.dgn Model: TR-1208_02

SUBMITTED BY:	NAME/DATE/TIME:
	Charles S. Harlow 2011.03.22 13:20:01 -04'00'
	Joseph C. Cancelliere 2011.03.24 06:24:54 -04'00'
APPROVED BY:	NAME/DATE/TIME:
	John F. Carey 2011.03.24 09:53:08 -04'00'

CTDOT STANDARD SHEET

OFFICE OF ENGINEERING

STANDARD SHEET TITLE:

METAL SIGN POSTS AND SIGN MOUNTING DETAILS

STANDARD SHEET NO.: TR-1208_02

SVIGALS + PARTNERS
84 Orange Street + New Haven, Connecticut
203.786.5110 + www.svigals.com

Tighe&Bond
www.tighebond.com
1000 Bridgeport Avenue
Suite 320
Shelton, CT 06484
(203) 712-1100

REVISION LOG:

No.	Description	Date

PROJECT NAME:
ENGINEERING & SCIENCE UNIVERSITY MAGNET SCHOOL

500 BOSTON POST ROAD
WEST HAVEN, CONNECTICUT 06516

PHASE:
CONSTRUCTION DOCUMENTS
PHASE 2 OF 3

DRAWING TITLE:
METAL SIGN POSTS AND SIGN MOUNTING DETAILS

SCALE:	DATE:
AS NOTED	JULY 11, 2013
JOB NUMBER: S1732	SDE NUMBER: 093-0357 MAG/N

DRAWING NUMBER:
TR-1208_02

7/18/2013 5:53:25 PM

Jun 18, 2014-11:43am Plotted By: rmr
Tighe & Bond, Inc. J:\S\S1732 Svigals ESUMS\DRAWINGS\0_Current\Drawings\DS-S1732-01.dwg

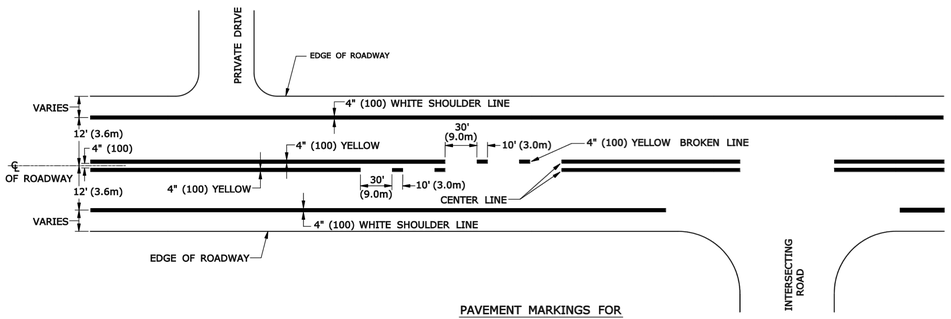

PAVEMENT MARKINGS FOR
CENTERLINE AND SHOULDER LINE

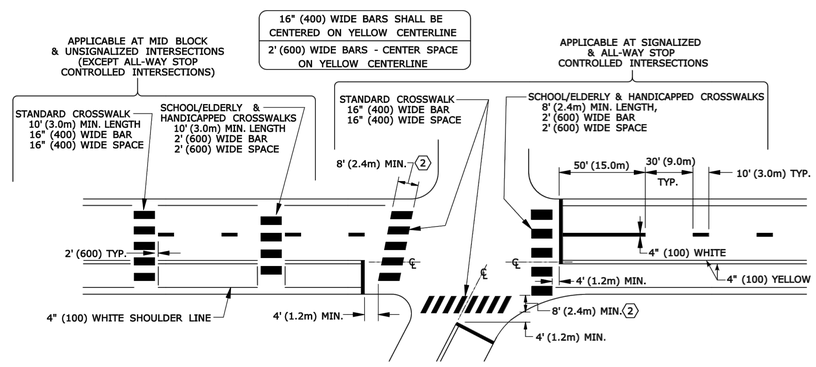

PAVEMENT MARKINGS FOR
STOP BARS AND CROSSWALKS

NOTES:

STOP-BARS

1. STOP BARS SHALL BE WHITE.
2. STOP BARS SHALL BE 12" (300) MIN. UNLESS OTHERWISE NOTED ON PLANS.
3. STOP BARS TO BE MARKED A MINIMUM OF 4' (1.2m) IN ADVANCE OF NEAREST EDGE OF CROSSWALK.
4. IN ABSENCE OF MARKED CROSSWALK THE STOP BAR SHALL BE PLACED AT THE DESIRED STOPPING POINT. NO MORE THAN 30' (9.0m) LESS THAN 5' (1.5m) FROM THE NEAREST EDGE OF THE INTERSECTING ROADWAY AND 90° TO THE CENTERLINE OF ROADWAY.
5. THE STOP BAR SHALL ORDINARILY BE PLACED IN LINE WITH THE STOP SIGN. HOWEVER, IF THE STOP SIGN CANNOT BE LOCATED EXACTLY WHERE VEHICLES ARE EXPECTED TO STOP, THE STOP BAR SHOULD BE PLACED AT THE STOPPING POINT.
6. STOP BARS AND CENTERLINE (WHEN SIDE STREET WIDTHS ARE 16' (4.8m) OR MORE) ARE TO BE MARKED ON SIDE STREETS WITHIN THE LIMITS OF CONSTRUCTION UNLESS, OTHERWISE INDICATED, OR AS DIRECTED BY THE ENGINEER.

CROSSWALKS

1. CROSSWALK MARKINGS SHALL BE WHITE.

(2) AT LOCATIONS WHERE THE CROSSWALK IS SKEWED, BARS TO BE PARALLEL TO ℄ AND ENDS OF BARS TO BE PARALLEL. THE LENGTH OF THE BARS WILL VARY DEPENDING ON THE ANGLE OF SKEW.

3. SCRAMBLE WALKS TO BE MARKED WITH ONE 24" WIDE LINE ACROSS EACH APPROACH.
4. BARS SHALL NORMALLY BE NO CLOSER THAN 2' FROM CURB LINE/EDGE OF ROAD. WHERE EXCESS SPACE MAY DEVELOP THIS DISTANCE MAY BE DECREASED TO 1'.
5. ONLY FULL LENGTH BARS ARE TO BE INSTALLED AT CORNERS.

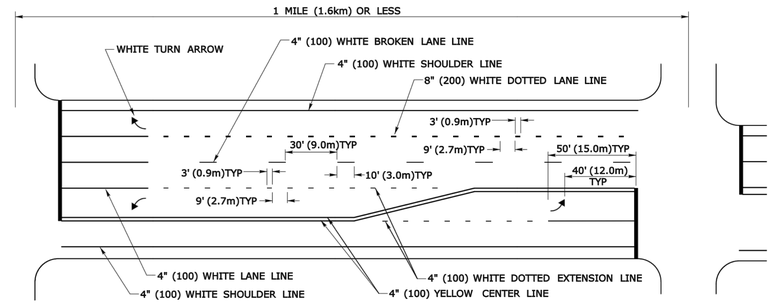

PAVEMENT MARKINGS FOR
TURNING LANES

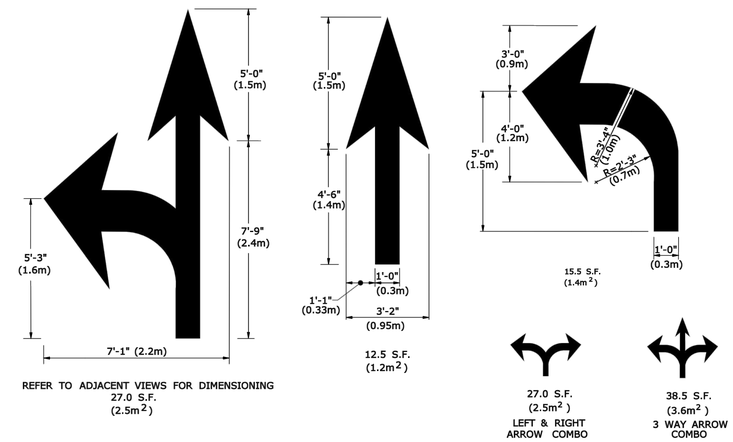

PAVEMENT ARROW DETAILS
(WHITE)
ARROWS SHALL BE CENTERED IN TRAVEL LANE

NOTES:

RAILROAD GRADE CROSSINGS

1. RAILROAD MARKINGS SHALL BE WHITE.
2. ON MULTI-LANE ROADS THE TRANVERSE BANDS SHOULD EXTEND AROSS THE APPROACH LANES AND INDIVIDUAL R X R SYMBOLS SHOULD BE USED IN EACH APPROACH LANE.

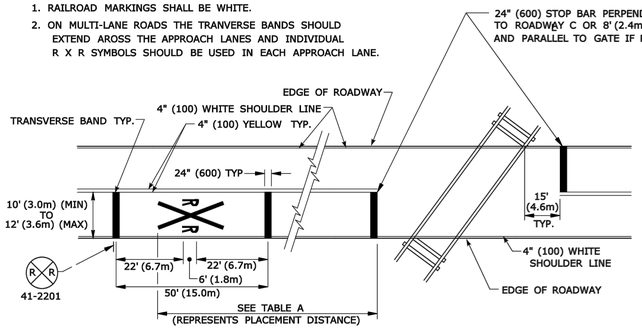

PAVEMENT MARKINGS FOR
RAILROAD GRADE CROSSINGS

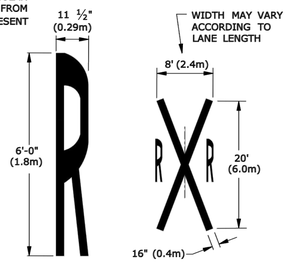

TABLE A	
POSTED OR 85 PERCENTILE SPEED M.P.H.	DISTANCE FT. (m)
20	*
25	*
30	100 (30)
35	150 (46)
40	225 (69)
45	300 (91)
50	375 (114)
55	450 (137)
60	550 (168)
65	650 (198)

* NO SUGGESTED MINIMUM DISTANCE, AT THESE SPEEDS, SIGN LOCATION DEPENDS ON PHYSICAL CONDITIONS AT SITE, HOWEVER SHOULD NOT BE LESS THAN 50' (15m).

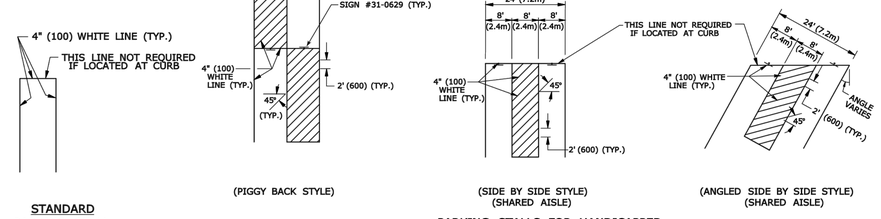

PARKING STALLS FOR HANDICAPPED

NOTES:
PAVEMENT MARKING

1. FOR PAVEMENT MARKINGS ON A CLIMBING LANE SEE DETAIL "L" ON TRAFFIC STANDARD SHEET TR-1210_02 "PAVEMENT MARKINGS FOR DIVIDED HIGHWAYS".
2. AREA OF PAVEMENT MARKINGS AS INDICATED IS APPROXIMATE.
3. FOR PAVEMENT MARKING LINES, STOP BARS AND ARROWS AT RAMPS SEE DETAILS "O" & "P" AND NOTES ON TRAFFIC STANDARD SHEET TR-1210_02 "PAVEMENT MARKINGS FOR DIVIDED HIGHWAYS".
4. RIGHT TURN PAVEMENT MARKINGS ARROWS ARE MIRROR IMAGE OF LEFT TURN PAVEMENT MARKING ARROWS.
5. SHARED AISLES MAY NOT BE USED WHERE CONNECTICUT BUILDING CODE GOVERNS

REV.	DATE	REVISION DESCRIPTION
2	12-2013	REMOVED PAVEMENT MARKING ARROWS ON RAMPS NOTES AND ADDED NEW NOTE #3 REFERRING TO SHEET TR-1210_02.
1	2-2011	ADDED PAVEMENT MARKINGS FOR TURNING LANES.

THE INFORMATION, INCLUDING ESTIMATED QUANTITIES OF WORK, SHOWN ON THESE SHEETS IS BASED ON LIMITED INVESTIGATIONS BY THE STATE AND IS IN NO WAY WARRANTED TO INDICATE THE CONDITIONS OF ACTUAL QUANTITIES OF WORK WHICH WILL BE REQUIRED.

Plotted Date: 12/4/2013

DIMENSIONS ARE IN ENGLISH (".") & METRIC UNITS (mm).
METRIC DIMENSIONS ARE ROUNDED:
- OVER 1" TO NEAREST 5 mm
- UNDER 1" TO NEAREST 1 mm.

NOT TO SCALE

STATE OF CONNECTICUT
DEPARTMENT OF TRANSPORTATION

Filename: CTDOT_TRAFFIC_STD.dgn Model: TR-1210_03

SUBMITTED BY: NAME/DATE/TIME: Mark F. Makuch 2013.12.10 08:20:00-05'00'
APPROVED BY: NAME/DATE/TIME: Charles S. Harlow 2013.12.10 11:32:07-05'00'

CTDOT
STANDARD SHEET

OFFICE OF ENGINEERING

STANDARD SHEET TITLE:
SPECIAL DETAILS AND PAVEMENT MARKINGS FOR TWO-WAY HIGHWAYS

STANDARD SHEET NO.:
TR-1210_03

SVIGALS + PARTNERS
84 Orange Street + New Haven, Connecticut
203.786.5110 + www.svigals.com

Tighe&Bond
www.tighebond.com
1000 Bridgeport Avenue
Suite 320
Shelton, CT 06484
(203) 712-1100

REVISION LOG:

No.	Description	Date

PROJECT NAME:
ENGINEERING & SCIENCE UNIVERSITY MAGNET SCHOOL

500 BOSTON POST ROAD
WEST HAVEN, CONNECTICUT 06516

PHASE:
CONSTRUCTION DOCUMENTS
PHASE 2 OF 3

DRAWING TITLE:
SPECIAL DETAILS AND PAVEMENT MARKINGS FOR TWO-WAY HIGHWAYS

SCALE: AS NOTED
DATE: JULY 11, 2013
JOB NUMBER: S1732
SDE NUMBER: 093-0357 MAG/N

DRAWING NUMBER:
TR-1210_03

7/18/2013 5:53:25 PM

Jul 18, 2014-11:43am Plotted By: rmr
Tighe & Bond, Inc. J:\S\S1732 Svigals ESUMS\DRAWINGS\0_Current\Drawings\TR-S1732-01.dwg

E5 - SERIES

E5-1 — EXIT

COPY & BORDER - WHITE
BACKGROUND - GREEN

AREA (SQ. FT)	SIZE (INCHES)	CONN. D.O.T. #	POSTS
16.0	48	51-6147	2

16 - SERIES

CONSTRUCTION AHEAD
ROAD USE RESTRICTED
STATE LIABILITY LIMITED
GENERAL STATUTES SEC 13a-115, 13a-145
COMMISSIONER OF TRANSPORTATION

	AREA (SQ. FT)	SIZE (INCHES)	CONN. D.O.T. #	POSTS
16-M	5.0	30X24	80-1613	1
16-H	17.5	60X42	80-1608	2
16-E	35.0	84X60	80-1605	2

CONSTRUCTION AHEAD
SIDEWALK USE RESTRICTED
STATE LIABILITY LIMITED
GENERAL STATUTES SEC 13a-115, 13a-145
COMMISSIONER OF TRANSPORTATION

	AREA (SQ. FT)	SIZE (INCHES)	CONN. D.O.T. #	POSTS
16-S	10.0	48X30	80-1619	2

G20 - SERIES

G20-2a — END ROAD WORK

AREA (SQ. FT)	SIZE (INCHES)	CONN. D.O.T. #	POSTS
8.0	48X24	80-9612	2

ROAD WORK NEXT 0 MILE(S) BE PREPARED TO STOP

VARIABLE MILEAGE

AREA (SQ. FT)	SIZE (INCHES)	CONN. D.O.T. #	POSTS
90.0	120X108	80-9728	

WORK AREA BE PREPARED TO STOP

AREA (SQ. FT)	SIZE (INCHES)	CONN. D.O.T. #	POSTS
9.0	36	80-9711	1
16.0	48	80-9712	2

NEXT 0 MILES

VARIABLE MILEAGE

AREA (SQ. FT)	SIZE (INCHES)	CONN. D.O.T. #	POSTS
7.0	72X14	80-9720	

BUSINESS ACCESS

VARIABLE ARROW
COPY & BORDER - WHITE
BACKGROUND - BLUE

AREA (SQ. FT)	SIZE (INCHES)	CONN. D.O.T. #	POSTS
9.0	36	50-5934	1

M4 - SERIES

M4-8 — DETOUR

AREA (SQ. FT)	SIZE (INCHES)	CONN. D.O.T. #	POSTS
2.0	24X12	80-9707	1

M4-9b — DETOUR

VARIABLE ARROW

AREA (SQ. FT)	SIZE (INCHES)	CONN. D.O.T. #	POSTS
5.0	30X24	80-9703	1

M4-8a — END DETOUR

AREA (SQ. FT)	SIZE (INCHES)	CONN. D.O.T. #	POSTS
3.0	24X18	80-9708	1

M4-9b — DETOUR

VARIABLE ARROW

AREA (SQ. FT)	SIZE (INCHES)	CONN. D.O.T. #	POSTS
6.25	30X30	80-9706	1

M4-10 — DETOUR (R) / DETOUR (L)

AREA (SQ. FT)	SIZE (INCHES)	CONN. D.O.T. #	POSTS
6.0	48X18	80-9701R	2
6.0	48X18	80-9702L	2

DETOUR

VARIABLE ARROW

AREA (SQ. FT)	SIZE (INCHES)	CONN. D.O.T. #	POSTS
5.0	30X24	80-9710	2

R1 - SERIES

R1-1 — STOP *

COPY & BORDER - WHITE
BACKGROUND - RED

AREA (SQ. FT)	SIZE (INCHES)	CONN. D.O.T. #	POSTS
5.19	30	31-0552	1
13.30	48	31-0557	2

R1-2 — YIELD *

COPY & BORDER - RED
BACKGROUND - WHITE

AREA (SQ. FT)	SIZE (INCHES)	CONN. D.O.T. #	POSTS
3.90	36	31-0523	1
10.83	60	31-0528	2

R4 - SERIES

R4-7

COPY & BORDER - BLACK
BACKGROUND - WHITE

AREA (SQ. FT)	SIZE (INCHES)	CONN. D.O.T. #	POSTS
5.0	24X30	31-1526	1

R9 & R11 - SERIES

R9-9 — SIDEWALK CLOSED

COPY & BORDER - BLACK
BACKGROUND - WHITE

AREA (SQ. FT)	SIZE (INCHES)	CONN. D.O.T. #	POSTS
3.75	30X18	80-9076	1

R9-11 — SIDEWALK CLOSED AHEAD → CROSS HERE

VARIABLE ARROW
COPY & BORDER - BLACK
BACKGROUND - WHITE

AREA (SQ. FT)	SIZE (INCHES)	CONN. D.O.T. #	POSTS
2.0	24X12	80-9074	1

R9-11a — SIDEWALK CLOSED → CROSS HERE

VARIABLE ARROW
COPY & BORDER - BLACK
BACKGROUND - WHITE

AREA (SQ. FT)	SIZE (INCHES)	CONN. D.O.T. #	POSTS
2.0	24X12	80-9075	1

R11-2 — ROAD CLOSED

COPY & BORDER - BLACK
BACKGROUND - WHITE

AREA (SQ. FT)	SIZE (INCHES)	CONN. D.O.T. #	POSTS
10.0	48X30	80-9080	2

R11-3a — ROAD CLOSED 00 MILES AHEAD LOCAL TRAFFIC ONLY

VARIABLE MILEAGE
COPY & BORDER - BLACK
BACKGROUND - WHITE

AREA (SQ. FT)	SIZE (INCHES)	CONN. D.O.T. #	POSTS
12.5	60X30	80-9077	2

R11-3b — BRIDGE CLOSED 00 MILES AHEAD LOCAL TRAFFIC ONLY

VARIABLE MILEAGE
COPY & BORDER - BLACK
BACKGROUND - WHITE

AREA (SQ. FT)	SIZE (INCHES)	CONN. D.O.T. #	POSTS
12.5	60X30	80-9078	2

R11-3b — ROAD CLOSED TO THRU TRAFFIC

COPY & BORDER - BLACK
BACKGROUND - WHITE

AREA (SQ. FT)	SIZE (INCHES)	CONN. D.O.T. #	POSTS
12.5	60X30	80-9081	2

ROAD WORK AHEAD FINES DOUBLED

COPY & BORDER - BLACK
BACKGROUND - WHITE

AREA (SQ. FT)	SIZE (INCHES)	CONN. D.O.T. #	POSTS
14.0	48X42	31-1906	2
22.5	60X54	31-1907	2
30.0	72X60	31-1908	2

W1 - SERIES

W1-4 — (L) (R)

AREA (SQ. FT)	SIZE (INCHES)	CONN. D.O.T. #	POSTS
9.0	36	80-9432L	1
9.0	36	80-9431R	1
16.0	48	80-9452L	2
16.0	48	80-9451R	2

W1-6 — (L or R)

AREA (SQ. FT)	SIZE (INCHES)	CONN. D.O.T. #	POSTS
4.5	36X18	80-9422	1
8.0	48X24	80-9424	2

W1-8

AREA (SQ. FT)	SIZE (INCHES)	CONN. D.O.T. #	POSTS
1.5	12X18	80-9402	1
5.0	24X30	80-9403	1
7.5	30X36	80-9404	1

BOTH LANES SHIFT LEFT AHEAD (L) — BOTH LANES SHIFT RIGHT AHEAD (R)

AREA (SQ. FT)	SIZE (INCHES)	CONN. D.O.T. #	POSTS
16.0	48	80-9433L	2
16.0	48	80-9435R	2

AHEAD (L) AHEAD (R)

AREA (SQ. FT)	SIZE (INCHES)	CONN. D.O.T. #	POSTS
25.0	60	80-9483L	2
25.0	60	80-9485R	2

BOTH LANES SHIFT LEFT (L) — BOTH LANES SHIFT RIGHT (R)

AREA (SQ. FT)	SIZE (INCHES)	CONN. D.O.T. #	POSTS
16.0	48	80-9434L	2
16.0	48	80-9436R	2

(L) (R)

AREA (SQ. FT)	SIZE (INCHES)	CONN. D.O.T. #	POSTS
25.0	60	80-9484L	2
25.0	60	80-9486R	2

AHEAD (L) AHEAD (R)

AREA (SQ. FT)	SIZE (INCHES)	CONN. D.O.T. #	POSTS
9.0	36	80-9443L	2
25.0	60	80-9445R	2

(L) (R)

AREA (SQ. FT)	SIZE (INCHES)	CONN. D.O.T. #	POSTS
9.0	36	80-9444L	2
25.0	60	80-9446R	2

W3 - SERIES

W3-1 — STOP AHEAD

AREA (SQ. FT)	SIZE (INCHES)	CONN. D.O.T. #	POSTS
9.0	36	80-9808	1

W3-1a

OCTAGON - RED W/ WHITE BORDER
ARROW & BORDER - BLACK
BACKGROUND - ORANGE

AREA (SQ. FT)	SIZE (INCHES)	CONN. D.O.T. #	POSTS
9.0	36	80-9050	1
16.0	48	80-9051	2

W3-2a

TRIANGLE - RED W/ WHITE BORDER
ARROW & BORDER - BLACK
BACKGROUND - ORANGE

AREA (SQ. FT)	SIZE (INCHES)	CONN. D.O.T. #	POSTS
9.0	36	80-9054	1
16.0	48	80-9055	2

W3-3

TOP CIRCLE - RED
MIDDLE CIRCLE - YELLOW
BOTTOM CIRCLE - GREEN
COPY & BORDER - BLACK
BACKGROUND - ORANGE

AREA (SQ. FT)	SIZE (INCHES)	CONN. D.O.T. #	POSTS
9.0	36	80-9052	1
16.0	48	80-9053	2

W4-W6 - SERIES

W4-2 — (L) (R)

AREA (SQ. FT)	SIZE (INCHES)	CONN. D.O.T. #	POSTS
16.0	48	80-9918L	2
16.0	48	80-9917R	2

W6-3

AREA (SQ. FT)	SIZE (INCHES)	CONN. D.O.T. #	POSTS
16.0	48	80-9945	2

W8-W9 - SERIES

W8-1 — BUMP

AREA (SQ. FT)	SIZE (INCHES)	CONN. D.O.T. #	POSTS
9.0	36	80-9901	1
16.0	48	80-9902	2

BUMP AHEAD

AREA (SQ. FT)	SIZE (INCHES)	CONN. D.O.T. #	POSTS
9.0	36	80-9801	1
16.0	48	80-9802	2

W9-2 — LANE ENDS MERGE LEFT (L) — LANE ENDS MERGE RIGHT (R)

AREA (SQ. FT)	SIZE (INCHES)	CONN. D.O.T. #	POSTS
16.0	48	80-9910L	2
16.0	48	80-9911R	2

W13 - SERIES

W13-1 — 00 M.P.H.

SUBPLATE
VARIABLE SPEED

AREA (SQ. FT)	SIZE (INCHES)	CONN. D.O.T. #	POSTS
2.25	18	80-9568	1
4.0	24	80-9569	1

REDUCE SPEED TO 00 MPH

VARIABLE SPEED

AREA (SQ. FT)	SIZE (INCHES)	CONN. D.O.T. #	POSTS
9.0	36	80-9506	1
16.0	48	80-9508	2

SPEED LIMIT AHEAD 00 MPH

VARIABLE SPEED

AREA (SQ. FT)	SIZE (INCHES)	CONN. D.O.T. #	POSTS
12.0	72X24	80-9519	2

W20 - SERIES

W20-1 — ROAD WORK AHEAD

AREA (SQ. FT)	SIZE (INCHES)	CONN. D.O.T. #	POSTS
6.25	30	80-9602	1
9.0	36	80-9603	1
16.0	48	80-9604	2

W20-1 — ROAD WORK 0000 FT

VARIABLE DISTANCE

AREA (SQ. FT)	SIZE (INCHES)	CONN. D.O.T. #	POSTS
9.0	36	80-9614	1
16.0	48	80-9615	2

W20-2 — DETOUR 1000 FT

AREA (SQ. FT)	SIZE (INCHES)	CONN. D.O.T. #	POSTS
9.0	36	80-9805	1
16.0	48	80-9806	2

W20-4 — ONE LANE ROAD AHEAD

AREA (SQ. FT)	SIZE (INCHES)	CONN. D.O.T. #	POSTS
9.0	36	80-9834	1
16.0	48	80-9835	2

LEFT LANES CLOSED (L) — RIGHT LANES CLOSED (R)

	AREA (SQ. FT)	SIZE (INCHES)	CONN. D.O.T. #	POSTS
(L)	16.0	48	80-9836	2
(R)	16.0	48	80-9839	2

LEFT TWO LANES CLOSED AHEAD (L) — RIGHT TWO LANES CLOSED AHEAD (R)

	AREA (SQ. FT)	SIZE (INCHES)	CONN. D.O.T. #	POSTS
(L)	16.0	48	80-9837	2
(R)	16.0	48	80-9838	2

LEFT LANE CLOSED AHEAD (L) — RIGHT LANE CLOSED AHEAD (R)

	AREA (SQ. FT)	SIZE (INCHES)	CONN. D.O.T. #	POSTS
(L)	16.0	48	80-9847	2
(R)	16.0	48	80-9848	2

LEFT LANE CLOSED (L) — RIGHT LANE CLOSED (R)

	AREA (SQ. FT)	SIZE (INCHES)	CONN. D.O.T. #	POSTS
(L)	16.0	48	80-9846	2
(R)	16.0	48	80-9849	2

W20-7a

AREA (SQ. FT)	SIZE (INCHES)	CONN. D.O.T. #	POSTS
9.0	36	80-9803	1
16.0	48	80-9804	2

SLOW MOVING TRUCKS AHEAD

AREA (SQ. FT)	SIZE (INCHES)	CONN. D.O.T. #	POSTS
32.0	96X48	80-9815	

(A) AHEAD
(B) 1/2 MILE
(C) 1 MILE

AREA (SQ. FT)	SIZE (INCHES)	CONN. D.O.T. #	POSTS
1.66	30X8	80-9829	

W21 - SERIES

W21-6 — SURVEY CREW

AREA (SQ. FT)	SIZE (INCHES)	CONN. D.O.T. #	POSTS
9.0	36	80-9607	1

PEDESTRIAN DETOUR

AREA (SQ. FT)	SIZE (INCHES)	CONN. D.O.T. #	POSTS
2.0	24X12	80-9912	1

W22 - SERIES

W22-1 — BLASTING ZONE 1000 FT

AREA (SQ. FT)	SIZE (INCHES)	CONN. D.O.T. #	POSTS
9.0	36	80-9620	1
16.0	48	80-9625	2

W22-2 — TURN OFF 2-WAY RADIO AND CELL PHONE

AREA (SQ. FT)	SIZE (INCHES)	CONN. D.O.T. #	POSTS
10.5	42X36	80-9623	2

W22-3 — END BLASTING ZONE

AREA (SQ. FT)	SIZE (INCHES)	CONN. D.O.T. #	POSTS
7.5	36X30	80-9622	1
10.5	42X36	80-9621	2

(VARIABLE LEGEND)

AREA (SQ. FT)	SIZE (INCHES)	CONN. D.O.T. #	POSTS
4.17	60X10	80-9913	2
12.0	96X18	80-9914	2
3.33	48X10	80-9916	2

STAY IN LINE

AREA (SQ. FT)	SIZE (INCHES)	CONN. D.O.T. #	POSTS
16.0	48	80-9951	2

BLANK OR VARIABLE LEGEND

AREA (SQ. FT)	SIZE (INCHES)	CONN. D.O.T. #	POSTS
9.0	36	80-9933	1
16.0	48	80-9934	2

USE SHOULDER

AREA (SQ. FT)	SIZE (INCHES)	CONN. D.O.T. #	POSTS
16.0	48	80-9956	2

(VARIABLE LEGEND)

AREA (SQ. FT)	SIZE (INCHES)	CONN. D.O.T. #	POSTS
12.5	60X30	80-9928	2
24.0	72X48	80-9929	2

SHOULDER CLOSED AHEAD (1) — SHOULDER CLOSED (2)

	AREA (SQ. FT)	SIZE (INCHES)	CONN. D.O.T. #	POSTS
(1)	16.0	48	80-9957	2
(2)	9.0	36	80-9958	1
(2)	16.0	48	80-9959	2

STOP-SLOW PADDLE

SIDE A * STOP — SIDE B * SLOW

SIDE A
BACKGROUND - RED
COPY & BORDER - WHITE
SIDE B
BACKGROUND - ORANGE
COPY & BORDER - BLACK PLAIN

AREA (SQ. FT)	SIZE (INCHES)	CONN. D.O.T. #	POSTS
2.51	19	80-9950	PADDLE

NEW

COPY & BORDER - BLACK
BACKGROUND - YELLOW

AREA (SQ. FT)	SIZE (INCHES)	CONN. D.O.T. #	POSTS
2.0	12X24	41-0815	

METRIC CONVERSION CHART
(1" = 25mm)

ENGLISH	METRIC	ENGLISH	METRIC
12"	300	60"	1500
18"	450	66"	1650
24"	600	72"	1800
30"	750	78"	1950
36"	900	84"	2100
42"	1050	90"	2250
48"	1200	96"	2400
54"	1350		

NOTES:

FOR METRIC SEE CONVERSION CHART.
1. R1-SERIES SIGN THE LEGEND "O.S.T.A." SHALL APPEAR.
2. POSTS - SEE STANDARD SHEET TR-1208_02 - "METAL SIGN POSTS AND SIGN MOUNTING DETAILS".
3. POSTS - TYPE A (EXCEPT WHERE NOTED WITH A "B" FOR TYPE B)
4. ALL POSTS NOTED ARE FOR LONG TERM INSTALLATION. SEE STANDARD SHEET TR-1208_02.
5. FOR TEMPORARY SUPPORTS SEE STANDARD SHEET TR-1220_02 - "CONSTRUCTION SIGN SUPPORTS AND CHANNELIZING DEVICES".
6. FOR SPECIFIC SIGN DESIGN, CONTACT CONN. D.O.T., DIVISION OF TRAFFIC ENGINEERING. FOR BOLT HOLE PATTERN REFER TO FHWA PUBLICATION "STANDARD HIGHWAY SIGNS". SIGNS OF DIFFERENT DIMENSIONS TO BE ERECTED ON THE SAME POSTS, OR SPAN/MAST ARM MOUNTED, MAY REQUIRE SPECIAL BOLT HOLE PATTERNS.
7. ALL CONSTRUCTION SIGNS TO BE PAID FOR UNDER THE CONSTRUCTION SIGNS ITEM IN THE CONTRACT.
8. MATERIALS & COLORS SHALL CONFORM TO STATE SPECIFICATIONS

MATERIALS:
SIGNS AND THEIR PORTABLE SUPPORTS SHALL CONFORM TO THE REQUIREMENTS OF NCHRP REPORT 350 (TL-3). ALUMINUM THICKNESS FOR POST MOUNTED SIGNS SHALL BE .100 EXCEPT SIGN #s. 80-9815, 80-9728, 80-9519, & 51-6147 (L OR R) WHICH SHALL BE .125, PLYWOOD THICKNESS FOR POST MOUNTED SIGNS SHALL BE 1/2 " EXTERIOR GRADE A-C OR BETTER. SIGN BLANKS SHALL HAVE ONE COAT OF PRIMER PAINT PRIOR TO APPLICATION OF RETROREFLECTIVE SHEETING & COPY.
ALL COLORS SHALL BE RETROREFLECTIVE WITH THE EXCEPTION OF BLACK WHICH SHALL BE OPAQUE.
COLORS: (UNLESS OTHERWISE SPECIFIED)
LEGEND - BLACK PLAIN
BACKGROUND - ORANGE RETROREFLECTIVE
* SIGNS TO BE "BRIGHT WIDE ANGLE RETROREFLECTIVE SHEETING.

REV.	DATE	REVISION DESCRIPTION
4	6-2012	REVISED NOTE #1 TO REFERENCE "O.S.T.A."
3	4-2012	REVISED NEW SIGNAL SIGN(S) TO CONFORM TO 2009 MUTCD.
2	2-2011	MINOR REVISIONS.
1	3-2010	REMOVED OBSOLETE SIGNS (50-5925, 50-5935).

THE INFORMATION, INCLUDING ESTIMATED QUANTITIES OF WORK, SHOWN ON THESE SHEETS IS BASED ON LIMITED INVESTIGATIONS BY THE STATE AND IS IN NO WAY WARRANTED TO INDICATE THE CONDITIONS OF ACTUAL QUANTITIES OF WORK WHICH WILL BE REQUIRED.

Plotted Date: 7/20/2012

DIMENSIONS ARE IN ENGLISH (.") & METRIC UNITS (mm).
METRIC DIMENSIONS ARE ROUNDED:
- OVER 1" TO NEAREST 5 mm
- UNDER 1" TO NEAREST 1 mm.

NOT TO SCALE

STATE OF CONNECTICUT
DEPARTMENT OF TRANSPORTATION

Filename: CTDOT_TRAFFIC_STD.dgn Model: TR-1220_01

SUBMITTED BY: NAME/DATE/TIME: Charles S. Harlow 2012.07.24 09:05:45-04'00'
APPROVED BY: NAME/DATE/TIME: Charles S. Harlow 2012.07.24 09:06:15-04'00'

CTDOT STANDARD SHEET
OFFICE OF ENGINEERING

STANDARD SHEET TITLE: SIGNS FOR CONSTRUCTION AND PERMIT OPERATIONS

STANDARD SHEET NO.: TR-1220_01

SVIGALS + PARTNERS
84 Orange Street + New Haven, Connecticut
203.786.5110 + www.svigals.com

Tighe&Bond
www.tighebond.com
1000 Bridgeport Avenue
Suite 320
Shelton, CT 06484
(203) 712-1100

REVISION LOG:

No.	Description	Date

PROJECT NAME:
ENGINEERING & SCIENCE UNIVERSITY MAGNET SCHOOL
500 BOSTON POST ROAD
WEST HAVEN, CONNECTICUT 06516

PHASE:
CONSTRUCTION DOCUMENTS
PHASE 2 OF 3

DRAWING TITLE:
SIGNS FOR CONSTRUCTION AND PERMIT OPERATIONS

SCALE: AS NOTED
DATE: JULY 11, 2013
JOB NUMBER: S1732
SDE NUMBER: 093-0357 MAG/N

DRAWING NUMBER:
TR-1220_01

7/18/2013 5:53:25 PM

Jul 18, 2014-11:43am Plotted By: cmr
Tighe & Bond, Inc. J:\S\S1732 Svigals ESUMS\DRAWINGS\0_Current\Drawings\TR-S1732-01.dwg

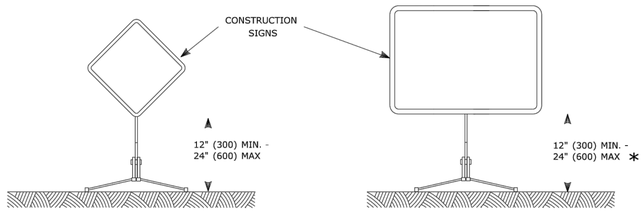

CONSTRUCTION SIGNS

NOTES FOR PORTABLE SIGN SUPPORTS:

1. SIGNS AND THEIR PORTABLE SUPPORTS SHALL CONFORM TO THE REQUIREMENTS OF NCHRP REPORT 350 (TL-3) AND THE LATEST EDITION OF THE MUTCD.
2. MOUNTING HEIGHT OF SIGNS SHALL BE A MINIMUM OF 12" (300) AND A MAXIMUM OF 24" (600). SIGNS SHALL BE MOUNTED HIGHER AS NEEDED TO MEET FIELD CONDITIONS OR AS DIRECTED BY THE ENGINEER.
3. THE ENGINEER RESERVES THE RIGHT TO REJECT ANY SUPPORT DEEMED UNSUITABLE FOR THE PURPOSE INTENDED.
4. PORTABLE SIGN SUPPORTS SHALL BE STABILIZED IN A MANNER THAT WILL NOT AFFECT THEIR COMPLIANCE WITH NCHRP REPORT 350 (TL-3).

* FOR EXIT SIGNS, USE MIN. 72" (1800).

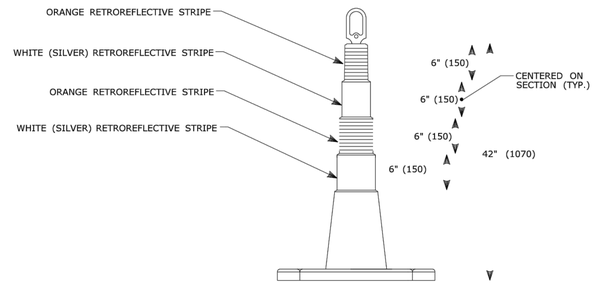

42" (1m) TRAFFIC CONE

NOTES:

1. TRAFFIC CONES SHALL CONFORM TO THE REQUIREMENTS OF NCHRP REPORT 350 (TL-3) AND THE LATEST EDITION OF THE MUTCD.
2. IF RUBBER CONES ARE USED, THEY SHALL HAVE INTERIOR RIBS FOR RIGIDITY.
3. IF PLASTIC CONES ARE USED, THEY SHALL BE COLOR IMPREGNATED.
4. THE ENGINEER RESERVES THE RIGHT TO REJECT ANY CONE DEEMED UNSUITABLE FOR THE PURPOSE INTENDED.

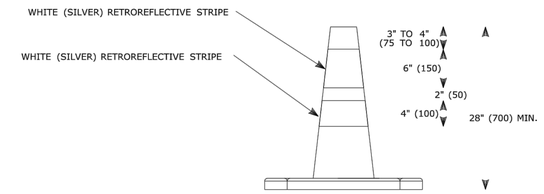

TRAFFIC CONE

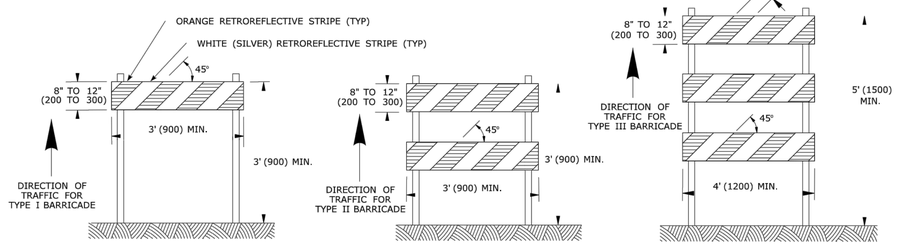

TYPE I BARRICADE **TYPE II BARRICADE** **TYPE III BARRICADE**

CONSTRUCTION BARRICADES

NOTES:

1. CONSTRUCTION BARRICADES SHALL CONFORM TO THE REQUIREMENTS OF NCHRP REPORT 350 (TL-3) AND THE LATEST EDITION OF THE MUTCD.
2. MARKINGS FOR BARRICADE RAILS SHALL BE ALTERNATE ORANGE AND WHITE STRIPES SLOPING DOWNWARD IN THE DIRECTION TRAFFIC IS TO PASS. 6" (150) WIDE STRIPES SHALL BE USED.
3. THE ENTIRE AREA OF ORANGE AND WHITE STRIPES SHALL BE RETROREFLECTIVE SHEETING AS REQUIRED IN THE SPECIFICATIONS. RAILS FOR TYPE I AND TYPE II BARRICADES SHALL BE RETROREFLECTIVE ON BOTH SIDES. WHERE TRAFFIC PASSES ONLY IN ONE DIRECTION OF TRAVEL, ONLY THE SIDE FACING TRAFFIC SHALL BE RETROREFLECTIVE.
4. THE ENGINEER RESERVES THE RIGHT TO REJECT ANY BARRICADE DEEMED UNSUITABLE FOR THE PURPOSE INTENDED.
5. CORNERS OF BARRICADE RAILS SHALL BE ROUNDED.
6. SIGNS MAY ONLY BE INSTALLED ON TYPE III BARRICADES AND SHALL BE PLACED SO AS TO COVER NO MORE THAN ONE BARRICADE RAIL.

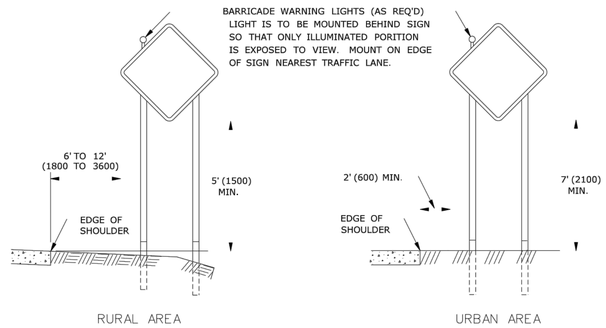

PLACEMENT OF CONSTRUCTION SIGNS TYPICAL LONG TERM INSTALLATION

NOTES:

SUPPORTS SHALL BE METAL SIGN POSTS AND HAVE BREAK-AWAY FEATURES.

SEE TYPICAL SHEETS:
"TYPICAL SIGN SUPPORT AND SIGN PLACEMENT DETAILS-GORE EXIT SIGN"
"TYPICAL METAL SIGN POSTS AND SIGN MOUNTING DETAILS"

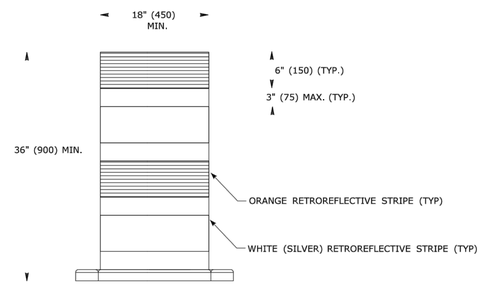

TRAFFIC DRUM FRONT VIEW

NOTES:

1. TRAFFIC DRUM SHALL CONFORM TO THE REQUIREMENTS OF NCHRP REPORT 350 (TL-3) AND THE LATEST EDITION OF THE MUTCD.
2. THE ENGINEER RESERVES THE RIGHT TO REJECT ANY DRUM DEEMED UNSUITABLE FOR THE PURPOSE INTENDED.
3. THE ENTIRE AREA OF ORANGE AND WHITE STRIPES SHALL BE RETROREFLECTIVE SHEETING AS REQUIRED IN THE SPECIFICATIONS.
4. THE SECTIONS OF DRUMS NOT COVERED WITH RETROREFLECTIVE STRIPES SHALL BE ORANGE.

REV.	DATE	REVISION DESCRIPTION
1	2-2011	MINOR REVISIONS.

THE INFORMATION, INCLUDING ESTIMATED QUANTITIES OF WORK, SHOWN ON THESE SHEETS IS BASED ON LIMITED INVESTIGATIONS BY THE STATE AND IS IN NO WAY WARRANTED TO INDICATE THE CONDITIONS OF ACTUAL QUANTITIES OF WORK WHICH WILL BE REQUIRED.

Plotted Date: 2/16/2011

DIMENSIONS ARE IN ENGLISH ("") & METRIC UNITS (mm).
METRIC DIMENSIONS ARE ROUNDED:
- OVER 1" TO NEAREST 5 mm
- UNDER 1" TO NEAREST 1 mm.

NOT TO SCALE

STATE OF CONNECTICUT
DEPARTMENT OF TRANSPORTATION

Filename: CTDOT_TRAFFIC_STD.dgn Model: TR-1220_02

SUBMITTED BY: NAME/DATE/TIME: Charles S. Harlow 2011.02.22 11:16:41 -05'00'
APPROVED BY: NAME/DATE/TIME: John F. Carey 2011.03.02 09:24:06 -05'00'

CTDOT STANDARD SHEET
OFFICE OF ENGINEERING

STANDARD SHEET TITLE: CONSTRUCTION SIGN SUPPORTS AND CHANNELIZING DEVICES

STANDARD SHEET NO.: TR-1220_02

SVIGALS + PARTNERS
84 Orange Street + New Haven, Connecticut
203.786.5110 + www.svigals.com

Tighe&Bond
www.tighebond.com
1000 Bridgeport Avenue
Suite 320
Shelton, CT 06484
(203) 712-1100

REVISION LOG:

No.	Description	Date

PROJECT NAME:
ENGINEERING & SCIENCE UNIVERSITY MAGNET SCHOOL

500 BOSTON POST ROAD
WEST HAVEN, CONNECTICUT 06516

PHASE:
CONSTRUCTION DOCUMENTS
PHASE 2 OF 3

DRAWING TITLE:
CONSTRUCTION SIGN SUPPORTS AND CHANNELIZING DEVICES

SCALE: AS NOTED
DATE: JULY 11, 2013
JOB NUMBER: S1732
SDE NUMBER: 093-0357 MAG/N

DRAWING NUMBER:
TR-1220_02

Jun 18, 2014 11:24am Plotted By: cmc
Tighe & Bond, Inc. J:\S1732 Svigals ESUMS\DRAWINGS\0_Current\Drawings\DS-S1732-01.dwg

7/18/2013 5:53:25 PM