13 - MEP

INDEX OF DRAWINGS

DRAWING NUMBER	DRAWING TITLE	
MEPI-001	MEP INDEX OF DRAWING	
FME-001	MECHANICAL - GEN. NOTES AND ABBREVIATIONS	
FME-002	MECHANICAL - GENERAL LEGEND	
FME-101	MECHANICAL PLAN	
FME-601	MECHANICAL - DETAILS	
FEL-001	ELECTRICAL POWER - GEN. NOTES, LEGEND & ABBREV. 1 OF 2	
FEL-002	ELECTRICAL POWER - GEN. NOTES, LEGEND & ABBREV. 2 OF 2	
FEL-101	ELECTRICAL POWER - PLATFORM PLAN	
FEL-102	ELECTRICAL POWER - ELEC. & COMM. ROOMS	
FEL-301	ELECTRICAL POWER - GROUNDING PLAN	
FEL-601	ELECTRICAL POWER - GROUNDING DETAILS	
FEL-701	GENERAL ARRANGEMENT - ONE-LINE DIAGRAM	
FLI-200	LIGHTING - DEMOLITION PLAN	
FLI-201	LIGHTING - PLATFORM PLAN	
FLI-601	LIGHTING - DETAILS	
FLI-801	LIGHTING - PANEL SCHEDULES	
FLI-802	LIGHTING - CONTROL ONE-LINE DIAGRAM	
FCI-001	COMM. SYSTEMS - GEN. NOTES, LEGEND & ABBREVIATIONS	
FCI-101	COMM. SYSTEMS - PLATFORM PLAN	
FCI-102	COMMUNICATION SYSTEMS - NEW COMMUNICATION ROOM PLAN	
FCI-601	COMMUNICATION SYSTEMS - DETAILS	
FCI-701	COMM. SYSTEMS - BLUE LIGHT, TVM & EMER. TEL. RISER DIAG.	
FCI-702	COMMUNICATION SYSTEMS - PIDS RISER DIAGRAM	
FAS-001	SECURITY SYSTEMS - GEN. NOTES, LEGEND & ABBREVIATIONS	
FAS-101	SECURITY SYSTEMS - PLATFORM PLAN	
FAS-102	SECURITY SYSTEMS - PARTIAL PLAN	
FAS-601	SECURITY SYSTEMS - DETAILS	
FAS-701	SECURITY SYSTEMS - NETWORK DIAGRAM	
FFD-001	FIRE ALARM - GEN. NOTES, LEGEND & ABBREVIATIONS	
FFD-101	FIRE ALARM - PLATFORM PLAN	
FFD-701	FIRE ALARM - RISER DIAGRAM	

DESIGNED BY:

Hatch Mott MacDonald
400 BLUE HILL DRIVE
SUITE 100, NORTH LOBBY
WESTWOOD, MA. 02090

STATE OF CONNECTICUT DAVID G. NEWMAN No. 29278 LICENSED PROFESSIONAL ENGINEER

David G. Newman
I Sign and Certify
Subset 13
2014.08.19
15:06:59-04'00'

DESIGNED BY:

Hatch Mott MacDonald
400 BLUE HILL DRIVE
SUITE 100, NORTH LOBBY
WESTWOOD, MA. 02090

STATE OF CONNECTICUT NIZOM S. GHANTOUS 23.5 LICENSED PROFESSIONAL ENGINEER

Nizom S.
Ghantous
I Sign and Certify
Subset 13
2014.08.19
15:07:14-04'00'

REV.	DATE	REVISION DESCRIPTION	SHEET NO.
-	-	-	-
-	-	-	-
-	-	-	-
-	-	-	-
-	-	-	-
-	-	-	-

THE INFORMATION, INCLUDING ESTIMATED QUANTITIES OF WORK, SHOWN ON THESE SHEETS IS BASED ON LIMITED INVESTIGATIONS BY THE STATE AND IS IN NO WAY WARRANTED TO INDICATE THE CONDITIONS OF ACTUAL QUANTITIES OF WORK WHICH WILL BE REQUIRED.

Plotted Date: 8/18/2014

DESIGNER/DRAFTER: S. BIRKOK
CHECKED BY: D. NEWMAN

NOT TO SCALE

STATE OF CONNECTICUT
DEPARTMENT OF TRANSPORTATION

Filename: ...\FA_CGR_CPS_0170-2296_063_05_MEP_001.dgn

SIGNATURE/BLOCK:

STATE OF CONNECTICUT DAVID G. NEWMAN No. 29278 LICENSED PROFESSIONAL ENGINEER

Hatch Mott MacDonald
Suite 100, North Lobby
400 Blue Hill Drive
Westwood, MA 02090

PROJECT TITLE:

NEW HAVEN - HARTFORD
SPRINGFIELD
RAIL CORRIDOR

TOWN: HARTFORD

DRAWING TITLE: MEP
INDEX OF DRAWINGS

PROJECT NO. 170-3261
DRAWING NO. MEPI-001
SHEET NO. 13.001

Connecticut Department of Transportation
QA/QC Format Check

GENERAL NOTES

1. THE CONTRACTOR SHALL VISIT THE SITE TO DETERMINE ALL PRE-EXISTING CONDITIONS AND WORK NECESSARY PRIOR TO SUBMISSION OF BID PRICE. EXTRA PAYMENT OR COMPENSATION FOR WORK REQUIRED DUE TO EXISTING CONDITIONS THAT WOULD HAVE BEEN OBSERVED DURING THE SITE EXAMINATION WILL NOT BE MADE.
2. THE CONTRACTOR SHALL BE FAMILIAR WITH ALL CONTRACT DOCUMENTS FOR ALL TRADES AND COORDINATE WITH OTHER CONTRACTORS.
3. DRAWINGS ARE DIAGRAMMATIC ONLY, FINAL ROUTING OF DUCTWORK, PIPING AND EQUIPMENT LOCATIONS SHALL BE DETERMINED IN THE FIELD. ADDITIONAL OFFSETS, ELBOWS, ETC., SHALL BE DEMOLISHED WITHOUT ADDITIONAL COST TO THE OWNER.
4. DIMENSIONS SHOWN ON PLAN ARE HORIZONTAL, DIMENSIONS SHOWN IN ELEVATION ARE VERTICAL EXCEPT THAT, IN WAY OF STRUCTURAL STEEL, DIMENSIONS ARE MEASURED PERPENDICULAR TO FLANGE.
5. ALL DUCTWORK SHALL BE CONSTRUCTED AND INSTALLED IN ACCORDANCE WITH THE LATEST EDITION OF SMACNA STANDARDS.
6. THE CONTRACTOR SHALL COORDINATE ALL ELECTRICAL AND PLUMBING REQUIREMENTS WITH THE ELECTRICAL CONTRACTOR.
7. THE CONTRACTOR SHALL FIELD MEASURE EXACT SIZES AND VERIFY ALL OPENINGS FOR SHAFTS AND LOUVERS PRIOR TO SUBMISSION OF SHOP DRAWINGS AND INSTALLATION.
8. THE CONTRACTOR SHALL FURNISH AND INSTALL ALL INCIDENTAL ACCESSORIES NECESSARY TO MAKE THE HVAC WORK COMPLETE AND READY FOR OPERATION.
9. ALL HVAC WORK SHALL BE IN ACCORDANCE WITH APPLICABLE FEDERAL, STATE AND LOCAL CODES.
10. ALL HVAC EQUIPMENT SHALL BE INSTALLED IN ACCORDANCE WITH THE MANUFACTURER'S RECOMMENDATIONS.
11. MANUFACTURERS' MODEL NUMBERS ARE SPECIFIED SOLELY TO ESTABLISH STANDARDS OF QUALITY FOR PERFORMANCE AND MATERIAL.
12. PROVIDE ACCESS PANELS FOR EQUIPMENT THAT REQUIRES PERIODIC SERVICE.
13. THE CONTRACTOR SHALL FURNISH TO THE GENERAL CONTRACTOR ALL INFORMATION REQUIRED FOR SETTING OF WALL, AND PARTITION OPENINGS FOR HVAC WORK. THIS INFORMATION SHALL BE FURNISHED IN A TIMELY MANNER SUCH THAT CONSTRUCTION SCHEDULE IS NOT JEOPARDIZED.
14. THE CONTRACTOR SHALL VERIFY ALL THE EXISTING CONDITIONS SHOWN ON THE DRAWINGS INCLUDING DUCTWORK AND PIPING THAT ARE INSTALLED IN ENCLOSED CHASE.
15. ALL WORK SHALL BE COORDINATED WITH OWNER'S REPRESENTATIVE, ARCHITECT, GENERAL CONTRACTOR AND THE OTHER TRADES.
16. WHERE DRAWINGS CONFLICT OR ARE UNCLEAR, ADVISE ARCHITECT IN WRITING BEFORE AWARD OF CONTRACT.
17. THE CONTRACTOR SHALL INVESTIGATE AVAILABLE SPACE FOR ALL EQUIPMENT IN CEILING BEFORE SUBMISSION OF SHOP DRAWINGS.
18. THE CONTRACTOR SHALL OBTAIN INSTALLATION INSTRUCTIONS ON EACH PIECE OF EQUIPMENT TO BE FURNISHED FOR WHICH THE HVAC CONTRACTOR IS REQUIRED TO INSTALL OR MAKE FINAL CONNECTIONS TO. THE HVAC CONTRACTOR SHALL INSTALL AND MAKE FINAL CONNECTIONS PER THE MANUFACTURER'S INSTRUCTIONS AND RECOMMENDATIONS. THE CONTRACTOR SHALL DEMONSTRATE TO THE OWNER THAT THE INSTALLED EQUIPMENT OPERATED AS DESIGNED.
19. COORDINATE ALL MOTOR, STARTER AND, DISCONNECT REQUIREMENTS WITH ELECTRICAL FOR ALL EQUIPMENT REQUIRING SAME.
20. ALL EXPOSED EQUIPMENT (GRILLES, UNIT HEATER, ETC.) SHALL HAVE COLORS SELECTED BY THE ARCHITECT UNLESS OTHERWISE NOTED.
21. ALL HVAC EQUIPMENT SHALL BE INSTALLED IN SUCH A WAY SO THAT LIGHTS DO NOT BLOCK ACCESS TO UNITS AND RELATED ACCESSORIES.

GENERAL ABBREVIATIONS

A	COMPRESSED AIR
AC	AIR CONDITIONING UNIT
ACCU	AIR COOLED CONDENSING UNIT
ACD	AUTOMATIC CONTROL DAMPER
AD	ACCESS DOOR
AHU	AIR HANDLING UNIT
AFF	ABOVE FINISHED FLOOR
AFMD	AIR FLOW MEASURING DEVICE
AP	ACCESS PANEL
APD	AIR PRESSURE DROP (INCHES OF WATER)
AS	AIR SEPARATOR
ATC	AUTOMATIC TEMPERATURE CONTROL
AV	AIR VENT (AUTOMATIC)
B	BOILER
BDD	BACKDRAFT DAMPER
BHP	BRAKE HORSE POWER
BTU/H	BRITISH THERMAL UNITS PER HOUR
C	CONTRACTOR
CACU	COMPUTER ROOM A.C. UNIT
CC	COOLING COIL
CF	CHEMICAL FEED
CFH	CUBIC FEET PER HOUR
CFM	CUBIC FEET PER MINUTE
CH	CHILLER
CHWR	CHILLED WATER RETURN
CHWS	CHILLED WATER SUPPLY
CM	CONSTRUCTION MANAGER
CO	CLEAN OUT
COND	CONDENSATE
CP	CONDENSATE PUMP
CT	COOLING TOWER
CTR	COOLING TOWER RETURN
CTS	COOLING TOWER SUPPLY
CU	CONDENSING UNIT
CUH	CABINET UNIT HEATER
CW	CITY WATER
D	DRAIN
DBT	DRY BULB TEMP. DEGREES F.
DIA	DIAMETER
DOV	DRAIN OFF VALVE
DTR	DUAL TEMPERATURE WATER RETURN
DTS	DUAL TEMPERATURE WATER SUPPLY
DX	DIRECT EXPANSION
E	EXISTING (BEFORE SYMBOL)
EA	EXHAUST AIR DEVICE
EHC	ELECTRIC HEATING COIL
EAT	ENTERING AIR TEMPERATURE
EBB	ELECTRIC BASEBOARD
EC	ELECTRICAL CONTRACTOR
EF	EXHAUST FAN
ESP	EXTERNAL STATIC PRESSURE
ET	EXPANSION TANK
ETBR	EXISTING TO BE REMOVED
ETR	EXISTING TO REMAIN
EUH	ELECTRIC UNIT HEATER
EWT	ENTERING WATER TEMPERATURE
EXP	EXPANSION
F	FILL
FA	FRESH AIR
FCU	FAN COIL UNIT
FD	FIRE DAMPER
FF	FINAL FILTER
FLA	FULL LOAD AMPS
FOR	FUEL OIL RETURN
FOS	FUEL OIL SUPPLY
FPB	FAN POWERED TERMINAL BOX
FPM	FEET PER MINUTE
FPS	FEET PER SECOND
FS	FLOW SWITCH
FSD	FIRE & SMOKE DAMPER
G	NATURAL GAS
GA	GAUGE
GAL	GALLONS
GC	GENERAL CONTRACTOR
GPH	GALLONS PER HOUR
GPM	GALLONS PER MINUTE
GR	GLYCOL RETURN
GS	GLYCOL SUPPLY
GUH	GAS UNIT HEATER
H	HUMIDIFIER
HG	HOT GAS
HP	HORSEPOWER
HPR	HIGH PRESSURE CONDENSATE RETURN
HPS	HIGH PRESSURE STEAM SUPPLY (60# AND UP)
HTHW	HIGH TEMPERATURE HOT WATER
HV	HEATING & VENTILATING UNIT
HVAC	HEATING, VENTILATING & AIR CONDITIONING
HWR	HOT WATER RETURN
HWS	HOT WATER SUPPLY
HX	HEAT EXCHANGER
ID	INSIDE DIAMETER
IU	INDUCTION UNIT
KW	KILOWATT
KWH	KILOWATT HOUR
LAT	LEAVING AIR TEMPERATURE
LBS/HR	POUNDS PER HOUR
LPR	LOW PRESSURE CONDENSATE RETURN
LPS	LOW PRESSURE STEAM SUPPLY (2# TO 15#)
LRA	LOCKED ROTOR AMPS
LTHW	LOW TEMPERATURE HOT WATER
LWT	LEAVING WATER TEMPERATURE
MAX	MAXIMUM
MBH	1,000 BTU PER HOUR
MCF	1,000 CUBIC FEET
MD	MOTORIZED DAMPER
MFG'R	MANUFACTURER
MIN	MINIMUM
MPR	MEDIUM PRESSURE CONDENSATE RETURN
MPS	MEDIUM PRESSURE STEAM SUPPLY (16# TO 59#)
MTD	MOUNTED
MTHW	MEDIUM TEMPERATURE HOT WATER
MUA	MAKE-UP AIR
MV	AIR VENT (MANUAL)
NA	NOT APPLICABLE
NC	NORMALLY CLOSED
NIC	NOT IN CONTRACT
NO	NORMALLY OPEN
NOM	NOMINAL
NTS	NOT TO SCALE
OA	OUTSIDE AIR
OBD	OPPOSED BLADE DAMPER
OD	OUTSIDE DIAMETER
P	PUMP
PC	PLUMBING CONTRACTOR
PCHWR	PROCESSED CHILLED WATER RETURN
PCHWS	PROCESSED CHILLED WATER SUPPLY
PD	PRESSURE DROP (FEET OF WATER)
PF	PRE-FILTER
PH	PRE-HEAT COIL
PRV	PRESSURE REDUCING VALVE
PS	PRESSURE SWITCH
PSIA	POUNDS PER SQUARE INCH ABSOLUTE
PSIG	POUNDS PER SQUARE INCH GAGE
R	RETURN AIR DEVICE
RA	RETURN AIR
RAF	RETURN AIR FAN
RC	REHEAT COIL
RH	RELATIVE HUMIDITY
RL	REFRIGERANT LIQUID
RP	RADIANT PANEL
RPM	REVOLUTIONS PER MINUTE
RS	REFRIGERANT SUCTION
RTU	ROOF TOP UNIT
S	SUPPLY AIR DEVICE
SA	SUPPLY AIR
SAU	SOUND ATTENUATING UNIT
SD	SMOKE DAMPER
SF	SUPPLY AIR FAN
SG	SPECIFIC GRAVITY
SP	STATIC PRESSURE (INCHES OF WATER)
SPC	STATIC PRESSURE CONTROLLER
T	TRANSFER AIR DEVICE
TAC	THRU WALL AIR CONDITIONER
TB	TERMINAL BOX
TEMP	TEMPERATURE
TSP	TOTAL STATIC PRESSURE
TW	THERMOMETER WELL
TYP	TYPICAL
UC	UNDER CUT
UH	UNIT HEATER
UV	UNIT VENTILATOR
V	VOLTS
VAV	VARIABLE AIR VOLUME TERMINAL BOX
VD	VOLUME DAMPER
VFD	VARIABLE FREQUENCY DRIVE
VP	VACUUM PUMP
VTR	VENTED THROUGH ROOF
W	WATTS
WAC	WINDOW AIR CONDITIONER
WBT	WET BULB TEMP. DEGREES F.
WH	WALL HEATER
WMS	WIRE MESH SCREEN
WPD	WATER PRESSURE DROP (FEET)

REV.	DATE	REVISION DESCRIPTION	SHEET NO.
-	-	-	-
-	-	-	-
-	-	-	-
-	-	-	-
-	-	-	-
-	-	-	-

THE INFORMATION, INCLUDING ESTIMATED QUANTITIES OF WORK, SHOWN ON THESE SHEETS IS BASED ON LIMITED INVESTIGATIONS BY THE STATE AND IS IN NO WAY WARRANTED TO INDICATE THE CONDITIONS OF ACTUAL QUANTITIES OF WORK WHICH WILL BE REQUIRED.

Plotted Date: 8/18/2014

DESIGNER/DRAFTER: **S. BIRKOK**

CHECKED BY: **D. NEWMAN**

NOT TO SCALE

STATE OF CONNECTICUT
DEPARTMENT OF TRANSPORTATION

Filename: ...\FA_CGR_CPS_0170-2296_063__05_FME__001.dgn

SIGNATURE/BLOCK:

STATE OF CONNECTICUT DAVID G. NEWMAN No. 29278 LICENSED PROFESSIONAL ENGINEER

Hatch Mott MacDonald
Suite 100, North Lobby
400 Blue Hill Drive
Westwood, MA 02090

PROJECT TITLE:

NEW HAVEN - HARTFORD SPRINGFIELD RAIL CORRIDOR

TOWN: **HARTFORD**

DRAWING TITLE: **MECHANICAL GENERAL NOTES AND ABBREV.**

PROJECT NO. **170-3261**

DRAWING NO. **FME-001**

SHEET NO. **13.002**

SHEETMETAL SYMBOLS

DOUBLE LINE		SINGLE LINE
	SUPPLY AIR DUCT TURN 90° UP	
	SUPPLY AIR DUCT TURN 90° DOWN	
	RET./EXH. AIR DUCT TURN 90° UP	
	RET./EXH. AIR DUCT TURN 90° DOWN	
	ROUND DUCT TURN 90° UP	
	ROUND DUCT TURN 90° DOWN	
	SUPPLY AIR DUCT UP & PENETRATING FLOOR ABOVE	
	RETURN/EXH. AIR DUCT UP & PENETRATING FLOOR ABOVE	
	ROUND DUCT UP & PENETRATING FLOOR ABOVE	

DOUBLE LINE		SINGLE LINE
VD	VOLUME DAMPER	VD
FSD	FIRE SMOKE DAMPER	FSD
BDD	BACKDRAFT DAMPER	BDD
FD	FIRE DAMPER	FD
SD	SMOKE DAMPER	SD
ACD	AUTOMATIC CONTROL DAMPER (ELECTRIC OR PNEUMATIC)	ACD
M	MOTORIZED DAMPER	M
H	DUCT MOUNTED HUMIDIFIER	H

DOUBLE LINE		SINGLE LINE
	FLEXIBLE DUCT	
	FLEXIBLE CONNECTION	
	BREAK &/OR CONTINUATION (RECT.)	
	BREAK &/OR CONTINUATION (ROUND)	
	EXISTING DUCTWORK AND EQUIPMENT TO REMAIN	
	EXISTING DUCTWORK AND/OR EQUIP. TO BE REMOVED	
	CONCENTRIC REDUCER	
	ECCENTRIC REDUCER	
	RECTANGULAR TO ROUND TRANSITION	

DOUBLE LINE		SINGLE LINE
	DUCT W/ 1" ACOUSTICAL LINER	
UP / DN	VERTICAL OFFSET UP OR DOWN (ARROW INDICATES DIRECTION OF FLOW) (RECT.)	
UP / DN	VERTICAL OFFSET UP OR DOWN (ARROW INDICATES DIRECTION OF FLOW) (ROUND)	
	DUCT REMOVED AND HOLE CAPPED/BLANKED OFF	
	HORIZONTAL OFFSET	

DOUBLE LINE		SINGLE LINE
	SMOOTH RADIUS ELBOW	
	ELBOW W/ TURNING VANES	
	TRUNK TEE	
	SQUARE BULLHEAD TEE W/TURNING VANES	

DOUBLE LINE		SINGLE LINE
	90° BRANCH TAKE-OFF	
	90° BRANCH TAKE-OFF (RECT. TO ROUND)	
	90° BRANCH TAKE-OFF (BELLMOUTH)	
	45° BRANCH TAKE-OFF (RECTANGULAR)	
	45° BRANCH TAKE-OFF (ROUND)	

SHEETMETAL SYMBOLS CONT.

DOUBLE LINE		SINGLE LINE
VD VD	LINEAR SIDEWALL DIFFUSER (W/SHEET METAL CONNECTION PLENUM W/1" LINING & BRANCH FOR EVERY 4' OF LINEAR.)	VD VD
VD VD	LINEAR SIDEWALL DIFFUSER (W/SHEET METAL CONNECTION PLENUM W/1" LINING & BRANCH FOR EVERY 4' OF LINEAR.) BOOT BY LD MFG'R	VD VD
	SIDEWALL DUCT MTD. REG./GRILLE	

GENERAL SYMBOLS

1	REVISION NUMBER
T	THERMOSTAT
H	HUMIDISTAT (MOUNT 54" AFF)
S	SPEED SWITCH
SD	SMOKE DETECTOR
RS	REMOTE SENSOR
	CONNECT TO EXISTING
	EXTENT OF REMOVAL
	DUCT SMOKE
	SUPPLY AIR ARROW
	RETURN/EXHAUST AIR ARROW
UC	UNDERCUT DOOR
DL	DOOR LOUVER

- / XXX	DENOTES EQUIPMENT NOT REQUIRING ELECTRICAL INPUT
UNIT #	DENOTES EQUIPMENT REQUIRING ELECTRICAL INPUT
#	DENOTES EQUIPMENT REQUIRING ELECTRICAL INPUT
	DENOTES HVAC DUCTWORK RISER
#	DENOTES CONTROL DEVICES

AIR DISTRIBUTION DEVICE

(2) X	(QUANTITY) TYPE
XXX	FLOW RATE (CFM)

VAV BOX

	1	DESIGNATION NUMBER
SIZE	VAV-6	SIZE
MAX. CFM	250	MAXIMUM CFM
MIN. CFM	150	MINIMUM CFM
GPM	1.0	FLOW RATE

NOTE: NOT ALL SYMBOLS MAY BE APPLICABLE TO THIS PROJECT.

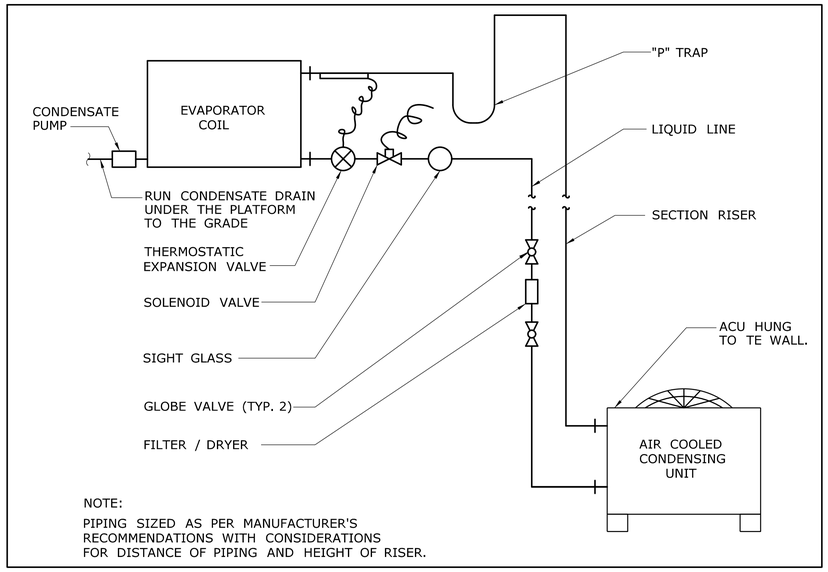

1 / -

TYPICAL SPLIT SYSTEM PIPING DETAIL

NTS

REV.	DATE	REVISION DESCRIPTION	SHEET NO.
-	-	-	-
-	-	-	-
-	-	-	-
-	-	-	-
-	-	-	-
-	-	-	-

THE INFORMATION, INCLUDING ESTIMATED QUANTITIES OF WORK, SHOWN ON THESE SHEETS IS BASED ON LIMITED INVESTIGATIONS BY THE STATE AND IS IN NO WAY WARRANTED TO INDICATE THE CONDITIONS OF ACTUAL QUANTITIES OF WORK WHICH WILL BE REQUIRED.

Plotted Date: 8/18/2014

DESIGNER/DRAFTER: **S. BIRKOK**

CHECKED BY: **D. NEWMAN**

NOT TO SCALE

STATE OF CONNECTICUT
DEPARTMENT OF TRANSPORTATION

Filename: ...\FA_CGR_CPS_0170-2296_063__05_FME__002.dgn

SIGNATURE/ BLOCK:

STATE OF CONNECTICUT DAVID G. NEWMAN No. 29278 LICENSED PROFESSIONAL ENGINEER

Hatch Mott MacDonald
Suite 100, North Lobby
400 Blue Hill Drive
Westwood, MA 02090

PROJECT TITLE: **NEW HAVEN - HARTFORD SPRINGFIELD RAIL CORRIDOR**

TOWN: **HARTFORD**

DRAWING TITLE: **MECHANICAL LEGEND & DETAILS**

PROJECT NO. **170-3261**

DRAWING NO. **FME-002**

SHEET NO. **13.003**

NOTES:

1. COORDINATE LOCATION OF INDOOR UNITS, AC-1 & 2 AND CORRESPONDING PIPING WITH ELECTRICAL PRIOR TO ANY WORK TO PREVENT ANY CONFLICT AND POTENTIAL DAMAGE TO THE EQUIPMENT.

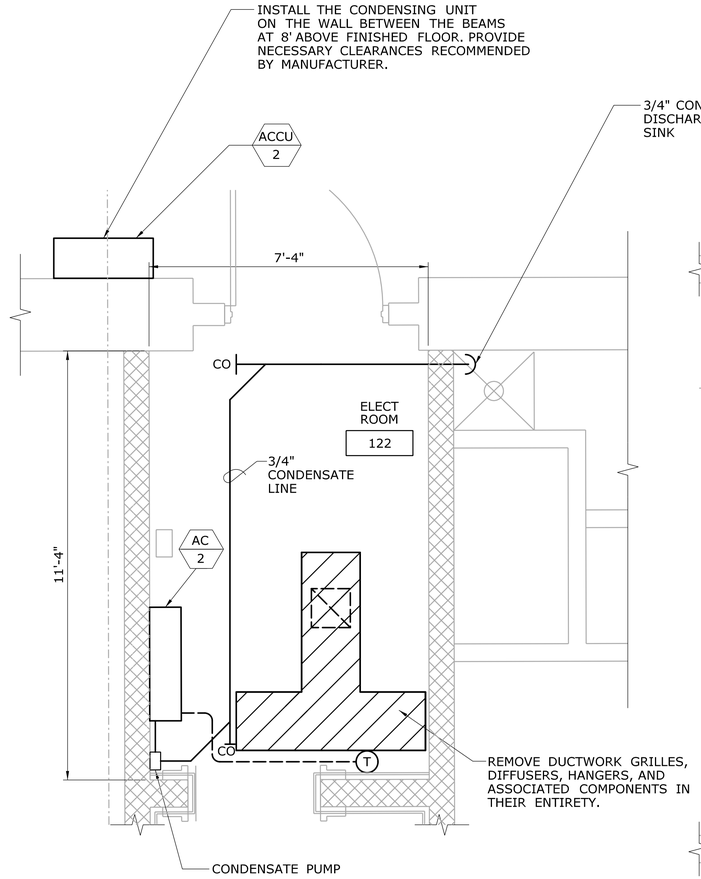

GRADE LEVEL MECHANICAL NEW & DEMO. WORK PLAN - ELECTRICAL ROOM

SCALE: ½"= 1'-0"

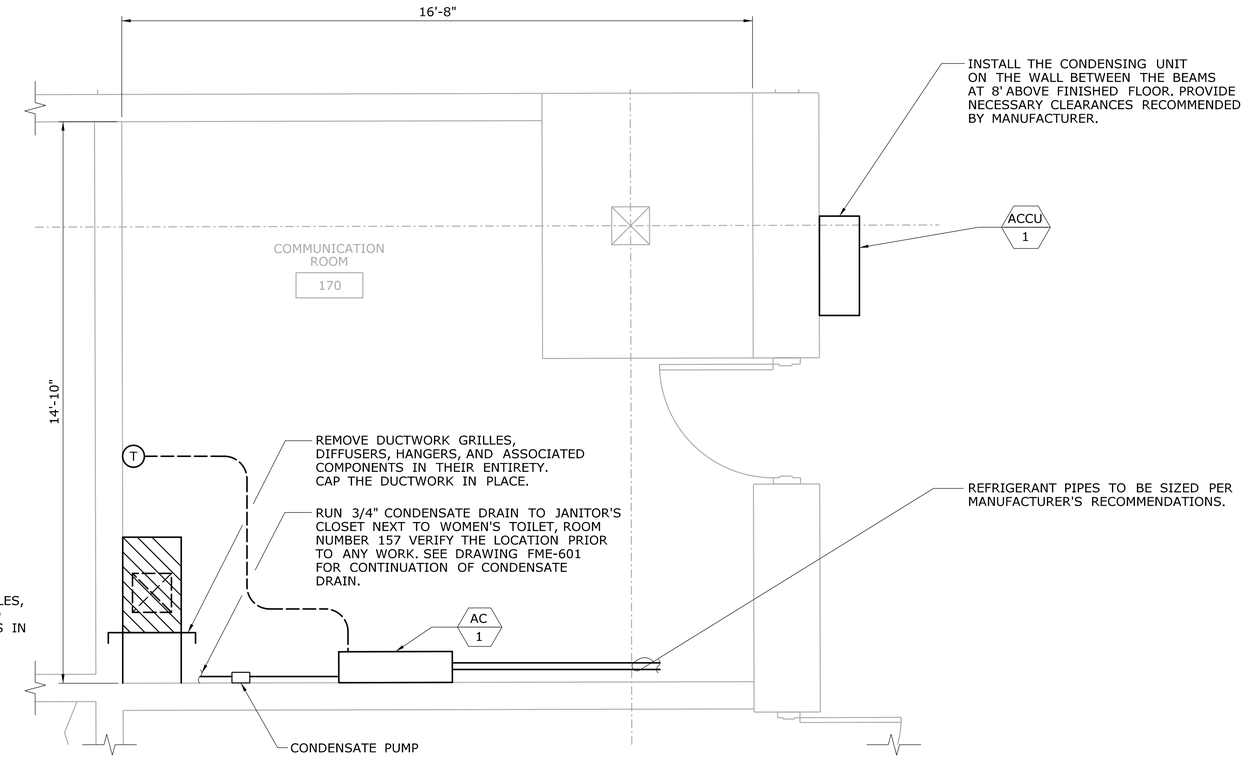

GRADE LEVEL MECHANCIAL NEW AND DEMO. PLAN - COMMUNICATION ROOM

SCALE: ½"= 1'-0"

DEMOLITION LEGEND:

HATCH LINE INDICATES TO BE REMOVED

HEAT PUMP UNIT SCHEDULE												
SYMBOL	SERVICE	TOTAL COOLING MBH	SENS. COOLING MBH	TOTAL CFM	ELECTRICAL DATA			FAN MOTOR			MANUFACTURER / MODEL NUMBER	REMARKS
					V	PH	HZ	MCA	FLA	W		
AC-1	COMMUNICATION ROOM	18.0	17.6	350	208	1	60	1	0.33	-	MITSUBISHI PKA-A18GAL	① ② ③
AC-2	ELECTRICAL ROOM	18.0	17.6	350	208	1	60	1	0.33	-	MITSUBISHI PKA-A18GAL	① ② ③

① PROVIDE MULTI-SPEED CONTROL (3-SPEED MIN).
② PROVIDE WIRELESS REMOTE CONTROLLER; WIRELESS SIGNAL RECEIVER
③ PROVIDE AC CONDENSATE PUMP (CP-1); LITTLE GIANT VCC-20ULS; 1/30 HP; 120V-1P-60HZ; 70 GPH @ 5' HEAD. PROVIDE SAFETY SWITCH CONNECTS TO ACCOUNT FOR SHUTDOWN, ABS SWITCH COVER AND PUMP STAND; THERMAL OVERLOAD PROTECTION, STAINLESS STEEL MOTOR SHAFT.

OUTDOOR CONDENSING UNIT SCHEDULE																
SYMBOL	LOCATION	REFRIGERANT TYPE	SERVICE	RATED CAPACITY		WINTER O.A. (° F)	SUMMER O.A. (° F)	SOUND PRESSURE (dBA)	WEIGHT (IBS)	ELECTRICAL DATA					MANUFACTURER / MODEL NUMBER	REMARKS
				HTG (MBH)	CLG (MBH)					V	PH	HZ	MCA	MOCP		
ACCU-1	OUTSIDE	R-410A	AC-1	19.0	18.0	0	95	46	99	208	1	60	13	20	MITSUBISHI / PUZ-A18NHA	① ② ③ ④
ACCU-2	OUTSIDE	R-410A	AC-2	19.0	18.0	0	95	46	99	208	1	60	13	20	MITSUBISHI / PUZ-A18NHA	① ② ③ ④

① REFRIGERANT PIPING SHALL BE SIZED PER MANUFACTURER'S RECOMENDATION AND FIELD VERIFICATION OF PIPE LENGTHS.
② UNIT SHALL COME COMPLETE WITH REFRIGERANT LINE SET KIT.
③ PROVIDE MOUNTING BRACKET.
④ PROVIDE LOW AMBIENT CONTROL.

REV.	DATE	REVISION DESCRIPTION	SHEET NO.
-	-	-	-
-	-	-	-
-	-	-	-
-	-	-	-
-	-	-	-
-	-	-	-

THE INFORMATION, INCLUDING ESTIMATED QUANTITIES OF WORK, SHOWN ON THESE SHEETS IS BASED ON LIMITED INVESTIGATIONS BY THE STATE AND IS IN NO WAY WARRANTED TO INDICATE THE CONDITIONS OF ACTUAL QUANTITIES OF WORK WHICH WILL BE REQUIRED.

Plotted Date: 8/19/2014

DESIGNER/DRAFTER: S. BIRKOK
CHECKED BY: D. NEWMAN
SCALE: 1/2" = 1'-0"

STATE OF CONNECTICUT
DEPARTMENT OF TRANSPORTATION

Filename: ...\FA_CGR_CPS_0170-2296_063_05_FME_101.dgn

SIGNATURE/BLOCK: STATE OF CONNECTICUT DAVID G. NEWMAN No. 29078 LICENSED PROFESSIONAL ENGINEER

Hatch Mott MacDonald
Suite 100, North Lobby
400 Blue Hill Drive
Westwood, MA 02090

PROJECT TITLE: NEW HAVEN - HARTFORD SPRINGFIELD RAIL CORRIDOR

TOWN: HARTFORD

DRAWING TITLE: MECHANICAL PLAN

PROJECT NO. 170-3261
DRAWING NO. FME-101
SHEET NO. 13.004

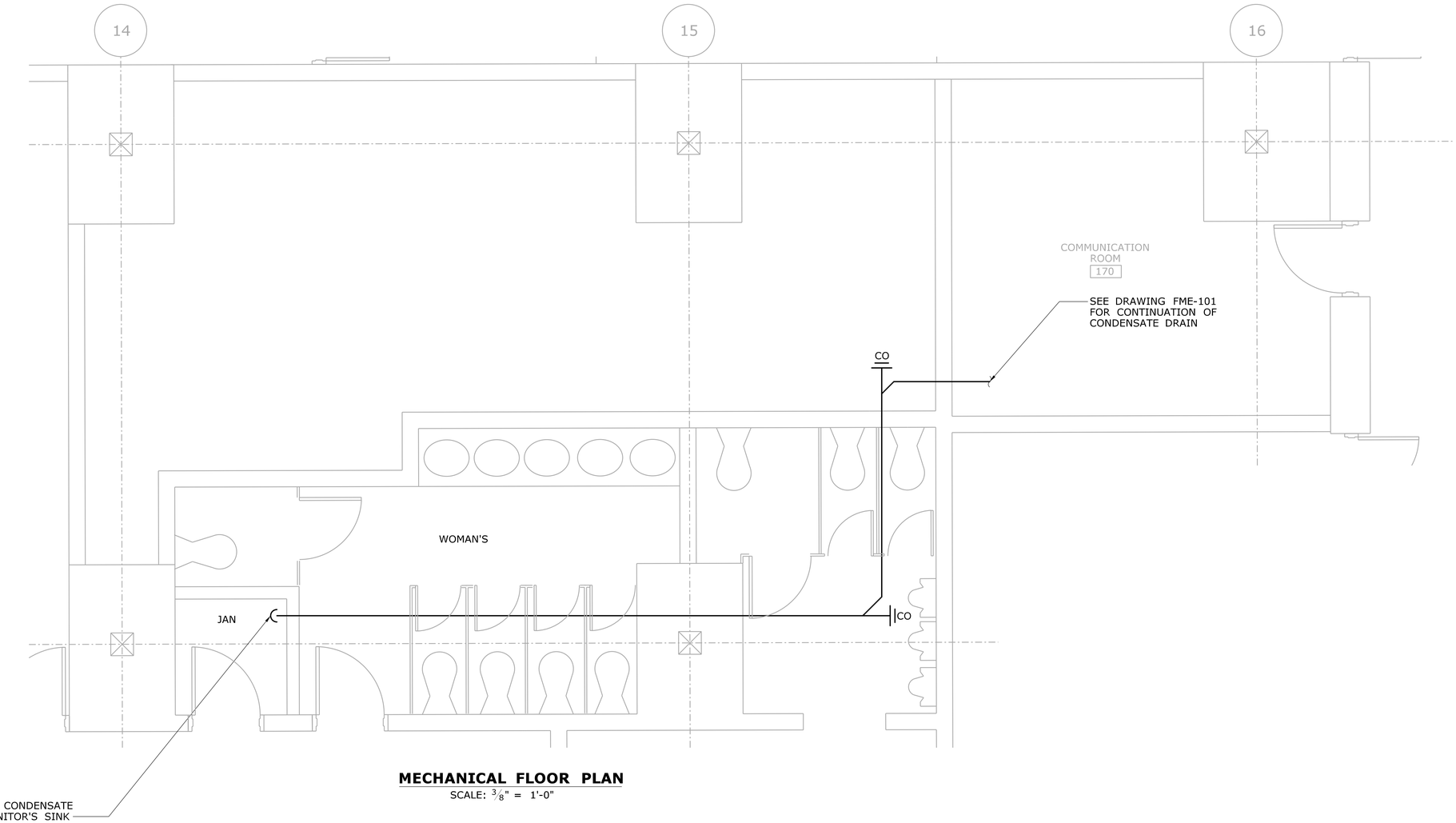

MECHANICAL FLOOR PLAN

SCALE: 3/8" = 1'-0"

REV.	DATE	REVISION DESCRIPTION	SHEET NO.
-	-	-	-
-	-	-	-
-	-	-	-
-	-	-	-
-	-	-	-
-	-	-	-

THE INFORMATION, INCLUDING ESTIMATED QUANTITIES OF WORK, SHOWN ON THESE SHEETS IS BASED ON LIMITED INVESTIGATIONS BY THE STATE AND IS IN NO WAY WARRANTED TO INDICATE THE CONDITIONS OF ACTUAL QUANTITIES OF WORK WHICH WILL BE REQUIRED.

Plotted Date: 8/19/2014

DESIGNER/DRAFTER: **S. BIRKOK**

CHECKED BY: **D. NEWMAN**

NOT TO SCALE

STATE OF CONNECTICUT
DEPARTMENT OF TRANSPORTATION

Filename: ...\FA..CGR..CPS..0170-2296..063...05..FME...601.dgn

SIGNATURE/ BLOCK:

STATE OF CONNECTICUT
DAVID G. NEWMAN
No. 23878
LICENSED
PROFESSIONAL ENGINEER

Hatch Mott MacDonald
Suite 100, North Lobby
400 Blue Hill Drive
Westwood, MA 02090

PROJECT TITLE:

NEW HAVEN - HARTFORD SPRINGFIELD RAIL CORRIDOR

TOWN: **HARTFORD**

DRAWING TITLE: **MECHANICAL PLAN - FLOOR PLAN**

PROJECT NO. **170-3261**

DRAWING NO. **FME-601**

SHEET NO. **13.005**

GENERAL NOTES:

1. ALL WORK SHALL CONFORM TO THE REQUIREMENTS OF THE NATIONAL ELECTRICAL CODE, NATIONAL ELECTRIC SAFETY CODE, NFPA, OSHA REGULATIONS AND ALL OTHER EXISTING CODES AND REGULATIONS OF AUTHORITIES HAVING JURISDICTION.
2. THE CONTRACT DRAWINGS ARE DIAGRAMMATIC IN NATURE AND NOT EVERY DETAIL OR CONDUIT IS SHOWN. EXISTING CONDITIONS AND DIMENSIONS SHALL BE VERIFIED IN THE FIELD BEFORE COMMENCING ANY FABRICATION, ORDERING ANY MATERIAL, OR PERFORMING ANY WORK. ANY DEPARTURE FROM CONCEPT SHOWN ON THE CONTRACT DRAWINGS SHALL BE SUBMITTED TO THE ENGINEER FOR APPROVAL. ALL ELECTRICAL EQUIPMENT SHOWN ON THE DRAWINGS AND/OR REQUIRED FOR THE FULL INTEGRITY OF THE CONTRACT SHALL BE FURNISHED, INSTALLED AND CONNECTED BY THE CONTRACTOR, EXCEPT WHERE EQUIPMENT SHOWN IS IDENTIFIED AS "EXISTING" OR OTHERWISE NOTED ON THE DRAWINGS.
3. UNLESS OTHERWISE NOTED, EQUIPMENT AND MATERIALS TO BE PROVIDED SHALL BEAR LISTING AND LABELING BY A NATIONALLY RECOGNIZED TESTING AGENCY WHERE SUCH STANDARD HAD BEEN ESTABLISHED FOR THAT TYPE OF EQUIPMENT/MATERIAL.
4. THE CONTRACTOR SHALL SUBMIT DETAILED EQUIPMENT LAYOUT PLANS, SECTIONS, AND MOUNTING DETAILS SHOWING PROPOSED LOCATION OF ALL EQUIPMENT AND REQUIRED WORKING/SERVICE CLEARANCES PRIOR TO INSTALLATION.
5. CONTRACTOR SHALL VISIT THE PROJECT SITE AND EXAMINE AND CONFIRM EXISTING CONDITIONS. ALL CHANGES SHALL BE PRESENTED DURING SHOP DRAWING SUBMITTALS FOR ENGINEER'S APPROVAL.
6. CONDUITS SHALL CONTAIN AN INSULATED GROUND WIRE BONDED TO ENCLOSURES AND SIZED IN ACCORDANCE WITH THE REQUIREMENTS OF NEC, IF SIZE IS NOT SHOWN ON THE CONTRACT DRAWINGS.
7. THE CONTRACTOR SHALL PROVIDE CONDUIT FITTINGS, CONNECTORS, CLAMPS, HARDWARE, HANGERS, AND SUPPORTS AS NECESSARY FOR A COMPLETE INSTALLATION.
8. THE CONTRACTOR SHALL PROVIDE TAGS FOR EQUIPMENT, CONDUITS, AND CABLES THAT ARE INSTALLED UNDER THIS CONTRACT. TAG IDENTIFICATIONS SHALL BE IN ACCORDANCE WITH CONTRACT DRAWINGS. TAGS FOR CONDUITS SHALL BE AS DESCRIBED IN SPECIFICATIONS.
9. UNUSED OPENINGS IN CONDUITS, BOXES, DISCONNECT SWITCHES, CABINETS, AND PANEL BOARDS SHALL BE CAPPED OR PLUGGED.
10. PROVIDE ALL NECESSARY TEMPORARY WIRING TO MAINTAIN EXISTING INSTALLATIONS WHICH MUST REMAIN IN SERVICE DURING CONSTRUCTION PERIOD.
11. MINIMUM SIZE CONDUCTOR TO BE USED IS #10AWG. (EXCEPT FOR CONTROLS).
12. MINIMUM SIZE CONDUIT TO BE USED IS 3/4".
13. SCHEDULE ALL DISCONNECTION AND INTERRUPTIONS OF ELECTRICAL SERVICE, COMMUNICATIONS AND SUPERVISORY SYSTEMS WITH THE OWNER AND ENGINEER.
14. CONTRACTORS SHALL FOLLOW ALL OWNER SITE SAFETY WORK PROCESSES AND PROCEDURES, FOR EXAMPLE, WORK PERMITS, SAFETY TASK ANALYSES, LOCKOUT TAGOUT (LOTO), LOCK, TAG AND TRY, AND RED TAG, ETC.
15. CONTRACTORS SHALL COORDINATE ALL WORK ACTIVITIES WITH OPERATIONS, MAINTENANCE, AND OTHER CONTRACTORS.

ABBREVIATIONS:

A OR AMP	AMPERES
AC	AIR CONDITIONING
ACT	ABOVE COUNTER TOP (6")
ACU	AIR CONDITIOING UNIT
ACCU	AIR COOLED CONDENSING UNIT
AF	AMP FRAME
AFF	ABOVE FINISHED FLOOR
AHU	AIR HANDLING UNIT
AIC	AMPERE INTERRUPTING CAPACITY
AM	AMMETER
APPROX	APPROXIMATELY
AS	AMMETER SELECTION SWITCH
ASYM	ASYMMETRICAL
AT	AMP TRIP
ATS	AUTOMATIC TRANSFER SWITCH
AUX	AUXILIARY
AWG	AMERICAN WIRE GAUGE
BLDG	BUILDING
C, CDT	CONDUIT
CB	CIRCUIT BREAKER
CKT	CIRCUIT
CLF	CURRENT LIMITING FUSE
CO	COMPANY
COL	COLUMN
CNTL	CONTROL
CS	COMBINATION STARTER
CT	CURRENT TRANSFORMER
Cu	COPPER
DIA	DIAMETER
DS OR DISC	DISCONNECT SWITCH
DWG(S)	DRAWING(S)
EG	EQUIPMENT GROUND
EGC	EQUIPMENT GROUND CONDUCTOR
ELEC	ELECTRIC, ELECTRICAL
EM	EMERGENCY
EMT	ELECTRICAL METALLIC TUBING
EOL	END OF LINE
ESTOP	EMERGENCY STOP
EX	EXISTING
EXP	EXPLOSION PROOF
F	FUSE
FCR	FLOAT CONTROL RELAY
FL, FLR	FLOOR
FT	FEET
G OR GND	GROUND
GA	GAUGE
GALV	GALVANIZED
GEC	GROUNDING ELECTRODE CONDUCTOR
GEN	GENERATOR
GF	GROUND FAULT
GFCI	GROUND FAULT CIRCUIT INTERRUPTER
GFI	GROUND FAULT INTERRUPTER
H-O-A	HAND-OFF-AUTOMATIC
HP	HORSEPOWER
HVAC	HEATING, VENTILATION & AIR CONDITIONING
IG	ISOLATED GROUND
ISBR	INTRINSICALLY SAFE BARRIER RELAY
IMC	INTERMEDIATE METAL CONDUIT
IN	INCH
IR	INFRARED
ISCA	INSTANTANEOUS SHORT CIRCUIT AVAILABLE
JB OR J	JUNCTION BOX
kVA	KILOVOLT - AMPS
kW	KILOWATTS
kWH	KILOWATT-HOUR
L	LENGTH
LA	LIGHTNING ARRESTOR
LFMC	LIQUIDTIGHT FLEXIBLE METAL CONDUIT
LTG	LIGHTING
MAX	MAXIMUM
MCB OR MB	MAIN CIRCUIT BREAKER
MCC	MOTOR CONTROL CENTER
MECH	MECHANICAL
MER	MECHANICAL EQUIPMENT ROOM
MFR	MANUFACTURER
MH OR MTG	MOUNTING HEIGHT
MIN	MINIMUM
MLO	MAIN LUGS ONLY
MS	MANUAL SWITCH
MTD	MOUNTED
N	NEUTRAL
NC	NORMALLY CLOSED
NEC	NATIONAL ELECTRICAL CODE
NEMA	NATIONAL ELECTRICAL MFRS ASSOCIATION
NF	NON-FUSIBLE
NFPA	NATIONAL FIRE PROTECTION ASSOCIATION
No.	NUMBER
NO	NORMALLY OPEN
NTS	NOT TO SCALE
O.C.	ON CENTER
OCPD	OVERCURRENT PROTECTIVE DEVICE
O/F	OVERFILL
OHE	OVERHEAD ELECTRICAL
OSHA	OCCUPATIONAL SAFETY & HEALTH ADMINISTRATION
Ø	PHASE
P	POLE
PERM	PERMANENT

ABBREVIATIONS (CONT.):

PFC	POWER FACTOR CAPACITOR
PH	PHASE
PLC	PROGRAMMABLE LOGIC CONTROLLER
PNL	PANEL
PR	PAIR
PVC	POLYVINYLCHLORIDE CONDUIT
PWR	POWER
R&R	REMOVE AND RELOCATE
R	RELOCATE
RE	RELOCATED
RECEPT	RECEPTACLE
REF	REFERENCE
RGS	RIGID GALVANIZED STEEL
RMS	ROOT MEAN SQUARE
SF	SEAL FITTING
SH	SHIELDED
SS	STAINLESS STEEL
SPD	SURGE PROTECTION DEVICE
SW	SWITCH
SWBD	SWITCHBOARD
SYM	SYMMETRICAL
TEL	TELEPHONE
TWIS	TWISTED INDIVIDUAL SHIELD
TWOS	TWISTED OUTER SHIELD
TYP	TYPICAL
UG	UNDERGROUND
UL	UNDERWRITER'S LABORATORIES
UV	ULTRAVIOLET
V	VOLTS
VA	VOLT AMPS
VAC	VOLTS ALTERNATING CURRENT
VDC	VOLTS DIRECT CURRENT
VFD	VARIABLE FREQUENCY DRIVE
VM	VOLTMETER
VMS	VOLTMETER SELECTOR SWITCH
W	WATT
W/	WITH
W/O	WITHOUT
WM	WATTMETER
WP	WEATHER PROOF
XFMR	TRANSFORMER

ONE-LINE DIAGRAM:

	CONNECTION TO ELECTRICAL UTILITY. VOLTAGE, PHASES AS INDICATED
M	UTILITY METER
G XX kW YY V	GENERATOR - 'XX' DESIGNATES POWER RATING - 'YY' DESIGNATES VOLTAGE
X:Y (Z)	CURRENT TRANSFORMER (CT). 'X:Y' INDICATES RATIO 'Z' INDICATES QUANTITY (1 PER PHASE UNLESS OTHERWISE INDICATED)
X:Y (Z)	POTENTIAL TRANSFORMER (PT). 'X:Y' INDICATES RATIO 'Z' INDICATES QUANTITY (1 PER PHASE UNLESS OTHERWISE INDICATED)
XFMR WW XX kVA YY-QQV Z%	TWO WINDING TRANSFORMER, PHASES AS DETERMINED BY OCPD -'Z' INDICATES % IMPEDANCE ANSI STANDARD IF NOT SPECIFIED -'WW' INDICATES STRUCTURE DESIGNATION -'XX' INDICATES POWER RATING -'YY' INDICATES PRIMARY VOLTAGE -'QQ' INDICATES SECONDARY VOLTAGE WINDINGS AS INDICATED -'△' INDICATES DELTA CONNECTION -'Y' INDICATES WYE CONNECTION WITH GROUNDED NEUTRAL

ONE-LINE DIAGRAM (CONT.):

N E L WTS XXA Y	TRANSFER SWITCH - 'W' INDICATES A: AUTOMATIC M: MANUAL - 'XX' INDICATES RATING IN AMPS - 'Y' INDICATES NUMBER OF POLES
XXA Y	SWITCH -'XX' INDICATES AMPERE RATING -'Y' INDICATES NUMBER OF POLES
	COMBINATION STARTER
XXAT/W YYAF Z	LOW VOLTAGE MOLDED CASE CIRCUIT BREAKER. - 'XX' INDICATES TRIP RATING IN AMPS (IF TRIP INTEGRAL) - 'YY' INDICATES FRAME RATING, ID SPECIFIED - 'W' INDICATES NUMBER OF POLES (3 UNLESS OTHERWISE NOTED) - 'Z' DESIGNATES TYPE: BLANK: THERMAL MAGNETIC LSI: ELECTRONIC TRIP MCP: MOTOR CIRCUIT PROTECTOR GFI: GROUND FAULT INTERRUPTING
XXA Y	FUSE - 'XX' INDICATES TRIP RATING IN AMPS - 'Y' INDICATES CLASSIFICATION (IF SPECIFIED)
≪ ≫	ANGLED BRACKETS INDICATE DRAWOUT DEVICE
XX TRIP FRAME	PROTECTIVE RELAY, METERING, OR INTERLOCKING DEVICE. 'XX' DESIGNATIONS: A: AMMETER V: VOLTMETER PF: POWER FACTOR K: KIRK KEY INTERLOCK I: ELECTRICAL INTERLOCK 25: SYNCHRONISM CHECK 27: UNDER VOLTAGE 46: CURRENT UNBALANCE 47: PHASE-SEQUENCE VOLTAGE 50: INSTANTANEOUS OVERCURRENT 51: TIME OVERCURRENT 52: AC CIRCUIT BREAKER 55: POWER FACTOR 59: OVER VOLTAGE 64: GROUND PROTECTIVE RELAY 81: FREQUENCY 86: LOCKING OUT RELAY * SPECIFIC MINIMUM FUNCTIONS TO BE LISTED BY ANSI/IEEE DEVICE NUMBERS
X	FULL VOLTAGE NON REVERSING CONTACTOR 'X' DESIGNATES NEMA SIZE OR: BC: BYPASS CONTACTOR OC: OUTPUT ISOLATION CONTACTOR IC: INPUT ISOLATION CONTACTOR
XXA/Y	LIGHTING CONTACTOR -'XX' DESIGNATES AMPERE RATING -'Y' DESIGNATES NUMBER OF POLES
X	MOTOR OVERLOAD. RATED FOR DEVICE PROTECTING. CLASS 20 UNLESS OTHERWISE INDICATED. -'X' DESIGNATES TYPE: T-THERMAL E-ELECTRONIC

ONE-LINE DIAGRAM (CONT.):

F R X	FULL VOLTAGE REVERSING CONTACTOR RATED FOR DEVICE PROTECTING. CLASS 20 UNLESS OTHERWISE INDICATED. -'X' DESIGNATES NEMA SIZE: -'F' INDICATES FORWARD CONTACTOR -'R' INDICATES REVERSING CONTACTOR
H L X	TWO SPEED STARTER -'X' DESIGNATES NEMA SIZE: -'H' INDICATES HIGH SPEED CONTACTOR -'L' INDICATES LOW SPEED CONTACTOR
X Y%	REDUCED VOLTAGE AUTOTRANSFOMER -'X' DESIGNATES NEMA SIZE: -'Y' INDICATES TAP PERCENTAGE
VFD XXA	VARIABLE FREQUENCY DRIVE. -'XX' INDICATES MINIMUM AMP RATING (IF NOT SPECIFIED, VFD TO MATCH HORSEPOWER RATING OF MOTOR SUPPLIED.)
CS XXA	COMBINATION STARTER 'XX' - MINIMUM AMP RATING
RVSS XXA	REDUCED VOLTAGE SOFT START. -'XX' INDICATES MINIMUM AMP RATING (IF NOT SPECIFIED, RVSS TO MATCH HORSEPOWER RATING OF MOTOR SUPPLIED.)
XXA/Y	NON-FUSED DISCONNECT SWITCH -'XX' DESIGNATES AMPERE RATING OF DISCONNECT -'Y' DESIGNATES NUMBER OF POLES
XXA/Y	FUSED DISCONNECT SWITCH -'XX' DESIGNATES AMPERE RATING OF DISCONNECT -'Y' DESIGNATES NUMBER OF POLES
WW XX HP	MOTOR -'WW' INDICATES EQUIPMENT DESIGNATION -'XX' INDICATES HORSEPOWER RATING.
PANEL: X	PANELBOARD -'X' INDICATES STRUCTURE DESIGNATION.
UPS	UNINTERRUPTIBLE POWER SUPPLY
SPD	SURGE PROTECTION DEVICE
XX	LIGHTNING ARRESTORS -'XX' INDICATES IC: INTERMEDIATE CLASS DC: DISTRIBUTION CLASS SC: STATION CLASS
	EARTH GROUND
ZZ	RESISTOR -'ZZ' INDICATES IMPEDANCE IN OHMS
	MISCELLANEOUS ELEC. EQUIPMENT SUCH AS PANEL, ETC. EQUIPMENT TYPE AND RATINGS TO BE INDICATED
	ELEC. EQUIPMENT BOUNDARY, INDICATES MULTIPLE DEVICES ENCLOSED WITHIN BORDER ARE LOCATED WITHIN THE SAME ENCLOSURE, OR MOUNTED TO SAME PANEL RACK.

LIGHTING:

SEE LIGHTING FIXTURE SCHEDULE

$XX — WALL SWITCH
XX - WAYS OF SWITCHING

(E) — EMERGENCY LIGHT

RACEWAYS:

CONDUIT RUN EXPOSED, AERIAL (OVERHEAD) ABOVE CEILING OR IN WALLS

CONDUIT RUN BELOW GRADE OR IN SLAB/WALLS

XXXX-YY — HOMERUN TO PANELBOARD. MINIMUM CONDUIT SIZE SHALL BE 3/4"."XXXX"- PANELBOARD NAME
"YY"- CIRCUIT NUMBER

FLEXIBLE CONDUIT

CONDUIT TURNING DOWN

CONDUIT TURNING UP

CONDUIT CAP

CONDUIT EXPANSION FITTING

HH — HANDHOLE

MH — MANHOLE

PB — PULL BOX

JUNCTION BOX

CABLE TRAY (DRAWN TO SCALE ON PLANS)

GROUNDING & LIGHTNING PROTECTION:

CONNECTION TO GROUND GRID, MECHANICAL OR CADWELD CONNECTION AS NOTED

GROUND ROD

GROUND TEST STATION

GROUND ANODE

VEHICLE GROUNDING STATION

DIRECT BURIED GROUND CONDUCTOR

GROUND CONDUTOR CONNECTION TO EQUIPMENT

LIGHTNING PROTECTION AIR TERMINAL

LIGHTNING PROTECTION SYSTEM CONDUCTOR

LIGHTNING PROTECTION SYSTEM DOWN CONDUCTOR

GROUNDING CONDUCTOR CONNECTION TO FUTURE EQUIPMENT

POWER EQUIPMENT

480Y/277 VOLT, 3Ø, 4W MAIN DISTRIBUTION PANEL

120Y/208 VOLT, 3Ø, 4W POWER PANEL

480Y/277 VOLT, 3Ø, 4W LIGHTING PANEL

480Y/277 VOLT, 3Ø, 4W EMER. POWER PANEL

120Y/208 VOLT, 3Ø, 4W EMER. POWER PANEL

OUTLETS AND RECEPTACLES:

XX — DUPLEX RECEPTACLE, MOUNT 18" AFF UNLESS OTHERWISE NOTED.

FOR ALL RECEPTACLES, 'XX' DESIGNATES:

GFCI - GROUND FAULT CIRCUIT INTERRUPTER
WP - WEATHERPROOF

LIGHTING FIXTURE SCHEDULE

FIXTURE TYPE	DESCRIPTION	SYMBOL	LAMP	VOLTAGE	MOUNTING	MOUNTING HEIGHT	REMARKS
A	LED	○	40W	277V	PENDANT	10'-0"	PLATFORM, AT EACH BAY; PHILIPS LUMEC DOMUS SMALL DOS 40W 30 LED-ES-LE2F-277-MAS BK-TX (TEXTURED BLACK)
A1	LED	●	60W	277V	POLE	12'-0"	DISPERAL AREA: PHILIPS LUMEC DOMUS SMALL DOS 60W 30LED-4K-ES-LE 4F-277; BK-TX MOUNTED ON POLE AM8F-15 ROUND ALUMINUM POLE; BRACKET PC-CN1-1A
B	LED	▭	60W	120V	CEILING	8'-0"	ELECTRICAL ROOM; KENALL LED TES5-48-150L40K-DV-CP
S1	LED	41"	8W	277V	HANDRAIL	HANDRAIL HEIGHT	LIGHTSTRIP ALONG HANDRAIL; WAGNER LUMENRAIL CUSTOM MATERIAL/COLOR; LENS:LULS 3K60TA-42 (NOTE 2)
S2	LED	21"	4W	277V	HANDRAIL	HANDRAIL HEIGHT	LIGHTSTRIP ALONG HANDRAIL; WAGNER LUMENRAIL CUSTOM MATERIAL/COLOR; LENS:LULS 3K60TA-24 (NOTE 2)
EX	LED	⊗	5W	277V	FRAME	8'-0"	EXIT SIGN ON PLATFORM; DUAL LITE-LED1ACRWW

NOTE:

1. CONTRACTOR SHALL SPECIFY DIMMING CAPABILITIES FOR ALL FIXTURES EXCEPT "EX" TYPE.
2. CONTRACTOR TO COORDINATE WITH THE LIGHTING REPRESENTATIVE FOR MEASUREMENTS OF HANDRAIL LIGHTING IN THE FIELD.
3. CONTRACTOR SHALL PROVIDE FIXTURES AS INDICATED IN THE SCHEDULE OR APPROVED EQUAL.

REV.	DATE	REVISION DESCRIPTION	SHEET NO.
-	-	-	-
-	-	-	-
-	-	-	-
-	-	-	-
-	-	-	-
-	-	-	-

THE INFORMATION, INCLUDING ESTIMATED QUANTITIES OF WORK, SHOWN ON THESE SHEETS IS BASED ON LIMITED INVESTIGATIONS BY THE STATE AND IS IN NO WAY WARRANTED TO INDICATE THE CONDITIONS OF ACTUAL QUANTITIES OF WORK WHICH WILL BE REQUIRED.

Plotted Date: 8/18/2014

DESIGNER/DRAFTER: D. CHERBELEATA
CHECKED BY: D. NEWMAN

STATE OF CONNECTICUT
DEPARTMENT OF TRANSPORTATION

Filename: ...\FA..CGR..CPS..0170-2296..063...05..FEL..002.dgn

SIGNATURE/BLOCK:

Hatch Mott MacDonald
Suite 100, North Lobby
400 Blue Hill Drive
Westwood, MA 02090

PROJECT TITLE: NEW HAVEN - HARTFORD SPRINGFIELD RAIL CORRIDOR

TOWN: HARTFORD

DRAWING TITLE: GENERAL NOTES, LEGEND & ABBR. SHEET 2 OF 2

PROJECT NO. 170-3261
DRAWING NO. FEL-002
SHEET NO. 13.007

NOTES:

1. EMERGENCY BLUE LIGHT PHONES POWER TO BE RUN WITH EMERGENCY LIGHTING CIRCUITS (SEE DWG. FLI-201).
2. CONDUIT SIZES ARE PER NEC 2011 WITH ALLOWANCE FOR EXTRA CONDUCTORS.
3. CONDUIT ROUTES ARE SHOWN DIAGRAMMATICALLY. CONTRACTOR TO REDUCE NUMBER OF JUNCTION BOXES TO A MINIMUM.
4. NEW CONDUITS TO BE RUN AERIAL ON EXISTING CONDUIT SUPPORT TRAY.

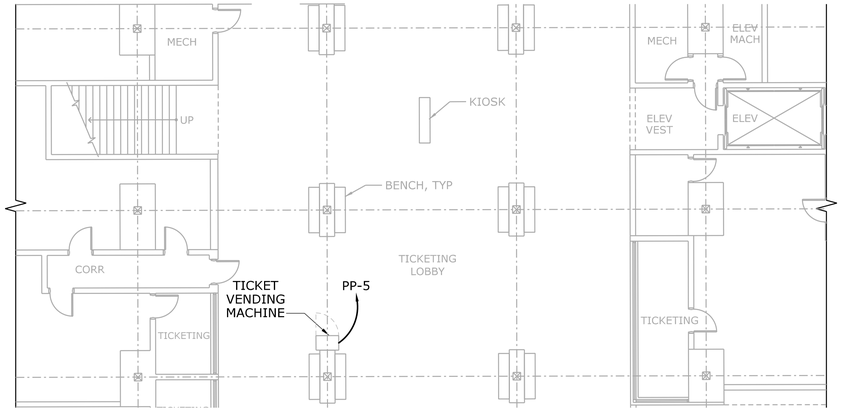

STATION TICKETING GRADE LEVEL - PARTIAL PLAN

SCALE: 1" = 10'-0"

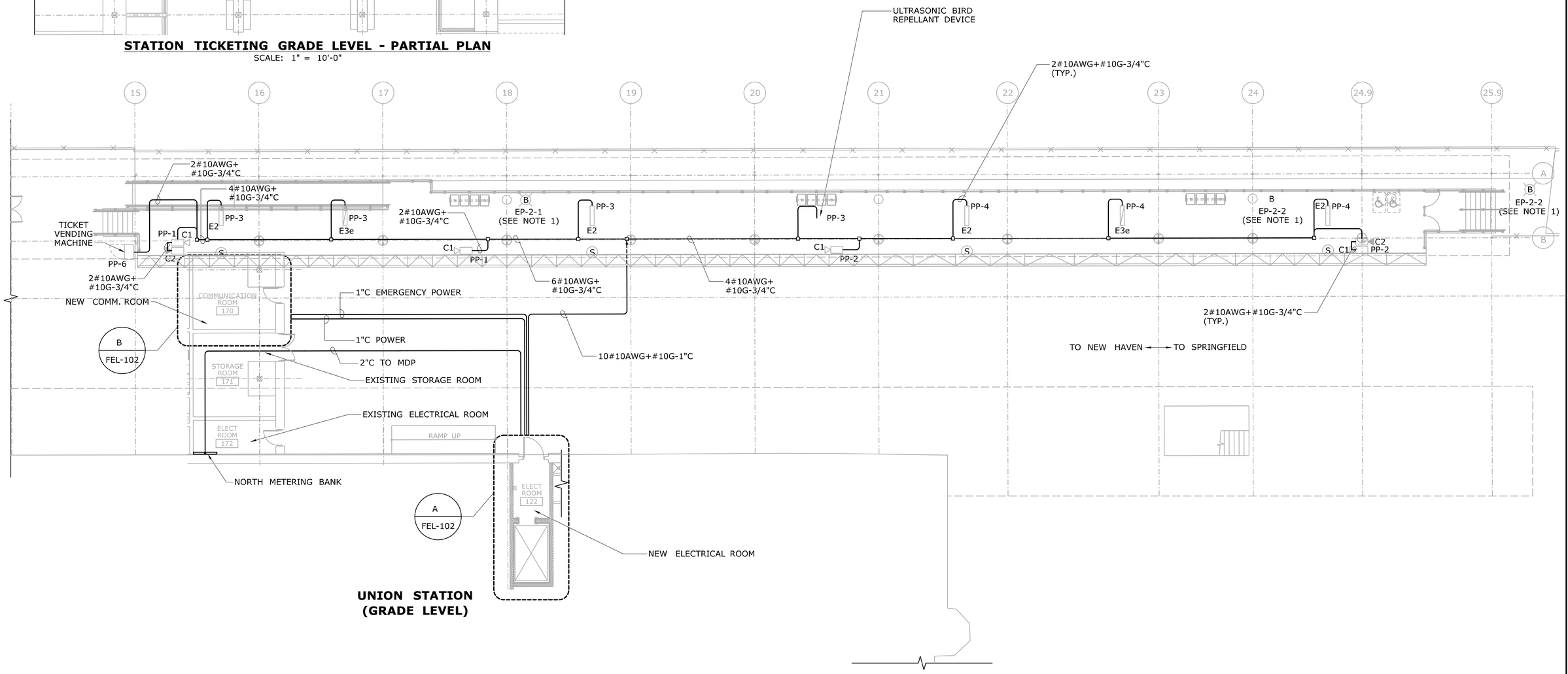

PLATFORM PLAN

SCALE: 1" = 10'-0"

REV.	DATE	REVISION DESCRIPTION	SHEET NO.
-	-	-	-
-	-	-	-
-	-	-	-
-	-	-	-
-	-	-	-
-	-	-	-

THE INFORMATION, INCLUDING ESTIMATED QUANTITIES OF WORK, SHOWN ON THESE SHEETS IS BASED ON LIMITED INVESTIGATIONS BY THE STATE AND IS IN NO WAY WARRANTED TO INDICATE THE CONDITIONS OF ACTUAL QUANTITIES OF WORK WHICH WILL BE REQUIRED.

Plotted Date: 8/19/2014

DESIGNER/DRAFTER: **D. CHERBELEATA**

CHECKED BY: **D. NEWMAN**

SCALE: 1" = 10'-0"

STATE OF CONNECTICUT
DEPARTMENT OF TRANSPORTATION

Filename: ...\FA_CGR_CPS_0170-2296_063_05_FEL_101

SIGNATURE/ BLOCK:

Hatch Mott MacDonald
Suite 100, North Lobby
400 Blue Hill Drive
Westwood, MA 02090

PROJECT TITLE:

NEW HAVEN - HARTFORD SPRINGFIELD RAIL CORRIDOR

TOWN: **HARTFORD**

DRAWING TITLE: **ELECTRICAL POWER - PLATFORM PLAN**

PROJECT NO. **170-3261**

DRAWING NO. **FEL-101**

SHEET NO. **13.008**

NOTES:

1. CONDUITS LEAVING OR ENTERING THE ELECTRICAL ROOM WILL BE RUN AERIAL IN EXISTING AND NEW TRAYS. CONTRACTOR TO COORDINATE INSTALLATION OF THE NEW CONDUITS THROUGH THE OPENING ABOVE THE ELECTRICAL ROOM DOOR AND THE CORRUGATED STEEL SOFFIT.
2. ADDITIONAL CIRCUIT AND PANEL DETAILS ON DWG. FLI-801.

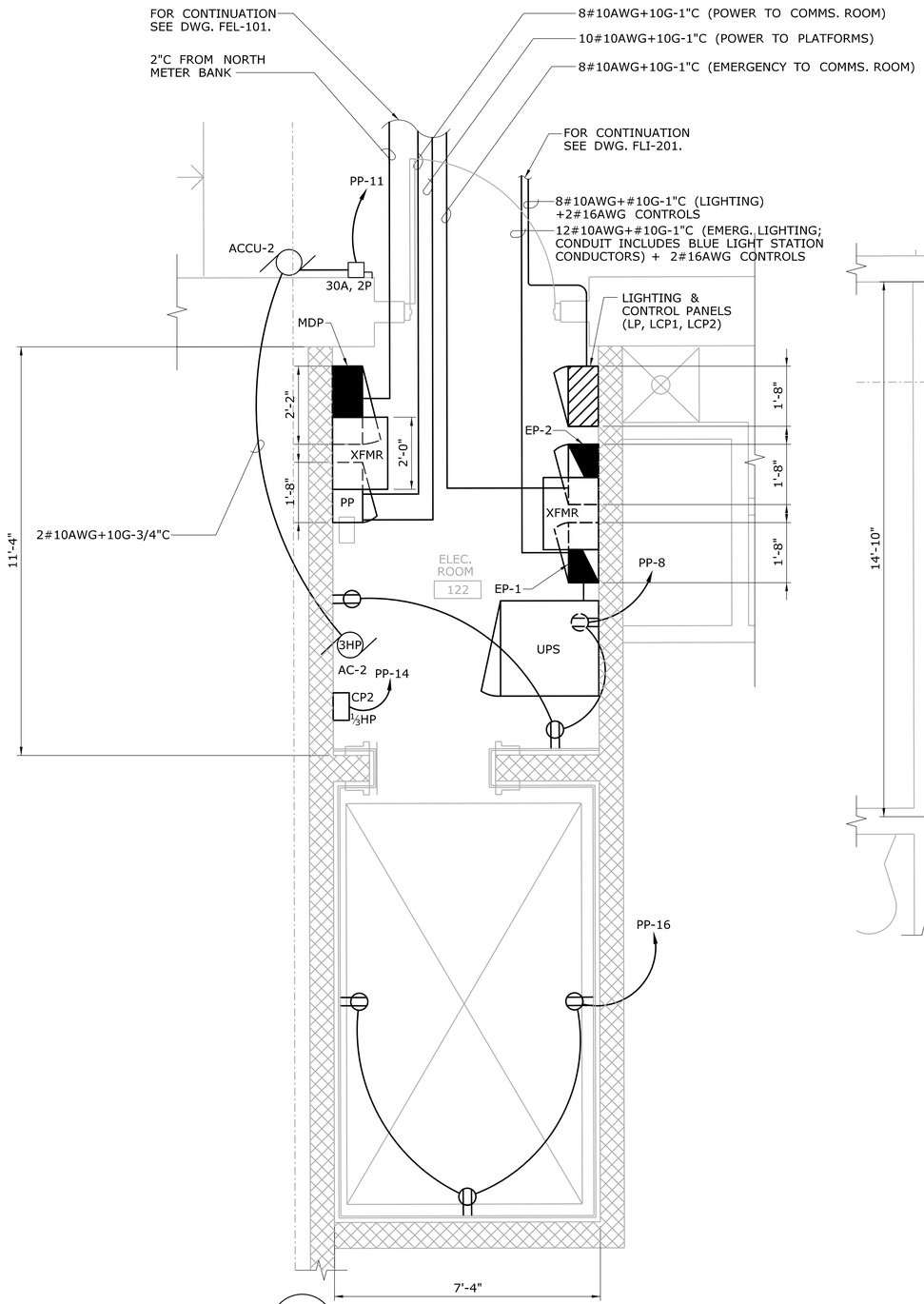

A FEL-101 **NEW - ELECTRICAL ROOM**
SCALE: 1/2"= 1'-0"

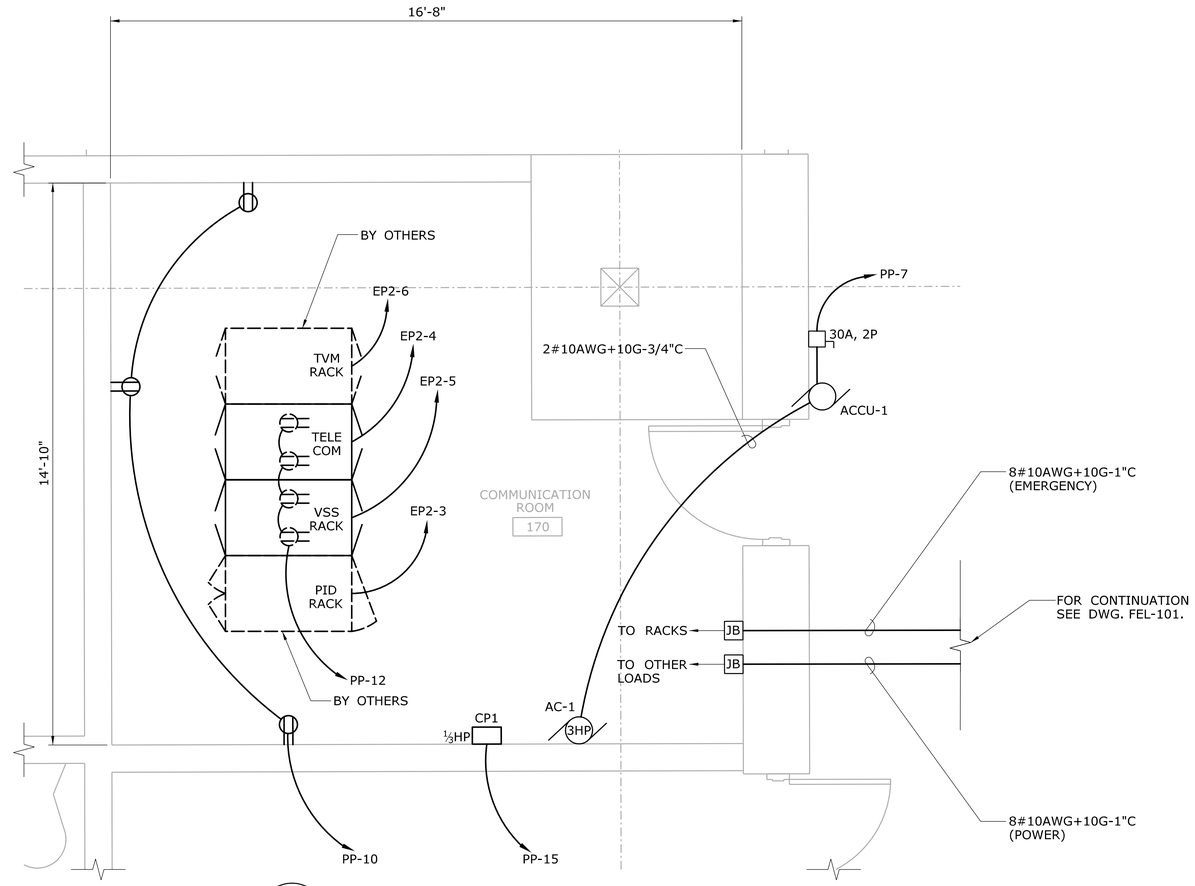

B FEL-101 **NEW - COMMUNICATION ROOM**
SCALE: 1/2"= 1'-0"

REV.	DATE	REVISION DESCRIPTION	SHEET NO.
-	-	-	-
-	-	-	-
-	-	-	-
-	-	-	-
-	-	-	-
-	-	-	-

THE INFORMATION, INCLUDING ESTIMATED QUANTITIES OF WORK, SHOWN ON THESE SHEETS IS BASED ON LIMITED INVESTIGATIONS BY THE STATE AND IS IN NO WAY WARRANTED TO INDICATE THE CONDITIONS OF ACTUAL QUANTITIES OF WORK WHICH WILL BE REQUIRED.

Plotted Date: 8/19/2014

DESIGNER/DRAFTER: **D. CHERBELEATA**
CHECKED BY: **D. NEWMAN**
SCALE: 1/2" = 1'-0"

STATE OF CONNECTICUT
DEPARTMENT OF TRANSPORTATION

Filename: ...\FA_CGR_CPS_0170-2296_063_05_FEL_102.dgn

SIGNATURE/BLOCK:
STATE OF CONNECTICUT JOHN S. GRANTOUSIS LICENSED PROFESSIONAL ENGINEER
Hatch Mott MacDonald
Suite 100, North Lobby
400 Blue Hill Drive
Westwood, MA 02090

PROJECT TITLE:
NEW HAVEN - HARTFORD SPRINGFIELD RAIL CORRIDOR

TOWN: **HARTFORD**

DRAWING TITLE: **ELECTRICAL POWER - ELEC. & COMM. ROOMS**

PROJECT NO. **170-3261**
DRAWING NO. **FEL-102**
SHEET NO. **13.009**

NOTES:

1. CONTRACTOR TO FURNISH 4/0 AWG BARE COPPER CONDUCTOR.
2. GROUND ROD SHALL BE $^{3}/_{4}$" DIAMETER 10FT LONG COPPER CLAD STEEL LOCATED AS SHOWN ON PLAN.
3. BURIED CONNECTIONS SHALL BE EXOTHERMIC WELD TYPE PER MANUFACTURERS INSTRUCTIONS.
4. INSTALL 1/0 AWG CU BONDING CABLES FROM THE BARE 4/0 AWG CU PERIMETER GROUNDING CABLE TO ALL ABOVE GRADE CONNECTION, SUCH AS STEEL COLUMNS, HANDRAILS, AND PASSENGER BENCHES.
5. FOR ADDITIONAL PLATFORM GROUNDING CONNECTIONS SEE DWG. FEL-601.
6. CONTRACTOR TO ENSURE GROUNDING CONTINUITY BACK TO UTILITY TRANSFORMER.

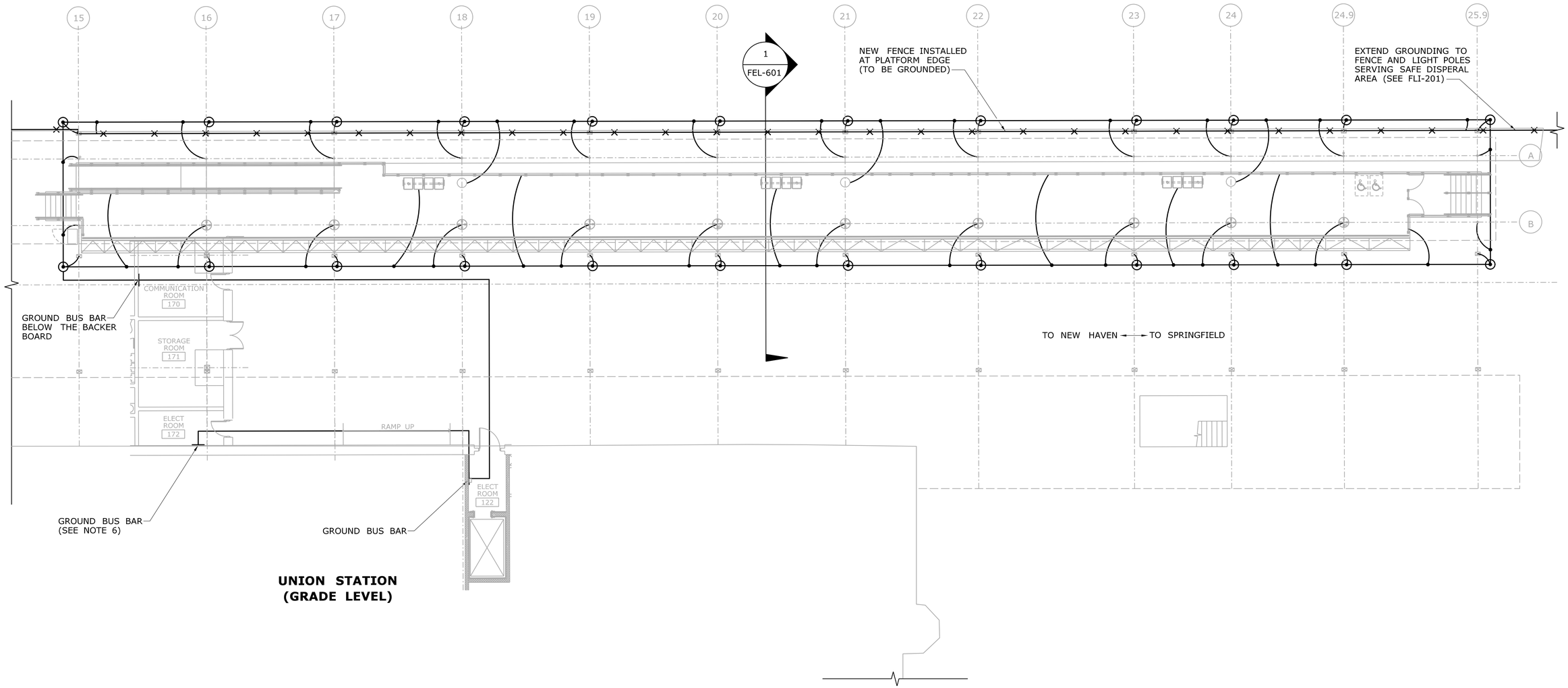

GROUNDING PLAN
SCALE: 1" = 10'-0"

REV.	DATE	REVISION DESCRIPTION	SHEET NO.
-	-	-	-
-	-	-	-
-	-	-	-
-	-	-	-
-	-	-	-
-	-	-	-

THE INFORMATION, INCLUDING ESTIMATED QUANTITIES OF WORK, SHOWN ON THESE SHEETS IS BASED ON LIMITED INVESTIGATIONS BY THE STATE AND IS IN NO WAY WARRANTED TO INDICATE THE CONDITIONS OF ACTUAL QUANTITIES OF WORK WHICH WILL BE REQUIRED.

Plotted Date: 8/19/2014

DESIGNER/DRAFTER: **D. CHERBELEATA**
CHECKED BY: **D. NEWMAN**
SCALE: 1" = 10'-0"

STATE OF CONNECTICUT
DEPARTMENT OF TRANSPORTATION

Filename: ...\FA..CGR..CPS..0170-2296..063...05..FEL...301

SIGNATURE/ BLOCK:

Hatch Mott MacDonald
Suite 100, North Lobby
400 Blue Hill Drive
Westwood, MA 02090

PROJECT TITLE: **NEW HAVEN - HARTFORD SPRINGFIELD RAIL CORRIDOR**

TOWN: **HARTFORD**

DRAWING TITLE: **GROUNDING PLAN**

PROJECT NO. **170-3261**
DRAWING NO. **FEL-301**
SHEET NO. **13.010**

NOTES:

1. REFER TO LEGEND SYMBOLS ON DWG. FEL-001 & FEL-002.
2. CONTRACTOR TO PLACE GROUND CONDUCTOR 30" BELOW GRADE.
3. TOP OF GROUND RODS SHALL BE ATTACHED TO GROUND CONDUCTOR AT 30" BELOW GRADE.
4. WHERE ROCK OR FOUNDATIONS ARE ENCOUNTERED ROD MAY BE DRIVEN AT AN OBLIQUE ANGLE NOT TO EXCEED 45 DEGREES FROM VERTICAL.

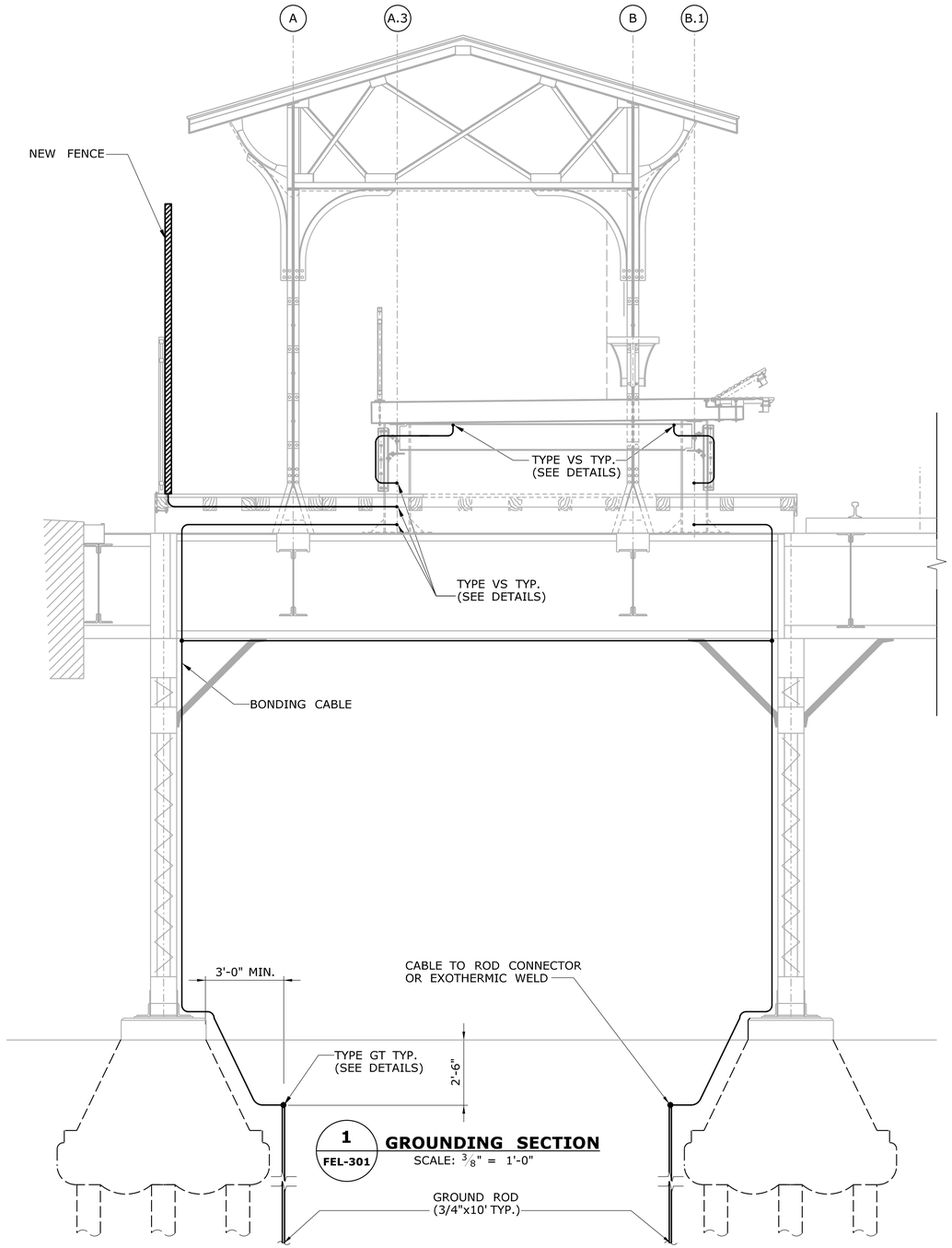

1 / FEL-301 **GROUNDING SECTION**
SCALE: 3/8" = 1'-0"

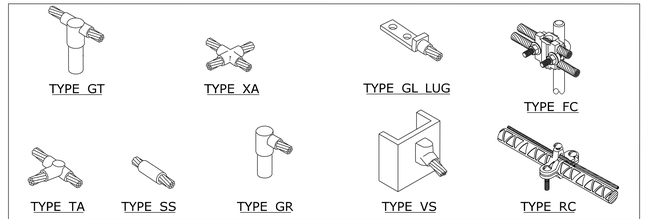

CADWELD BILL OF MATERIALS

TYPE	CATALOG#	DESCRIPTION
TA	TAC-2Q2Q, WELD METAL #150	HORIZONTAL TEE
VS	VSC-2Q, WELD METAL #115	VERTICAL STEEL CONNECTION
SS	SSC-2Q, WELD METAL #90	IN-LINE SPLICE CONNECTION
GT	GTC-182Q, WELD METAL #115	CABLE TO GROUND ROD
RC	#RC100	REBAR CLAMP
FC	FC073	FENCE POST CLAMP

CADWELD DETAILS

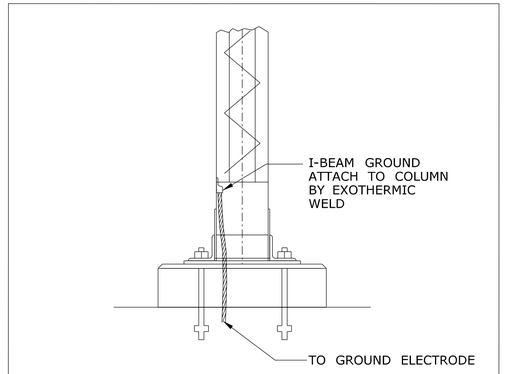

TYPICAL COLUMN CLAMP GROUNDING DETAIL

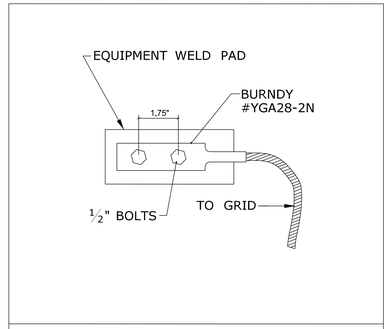

TYPICAL EQUIPMENT GROUND PAD

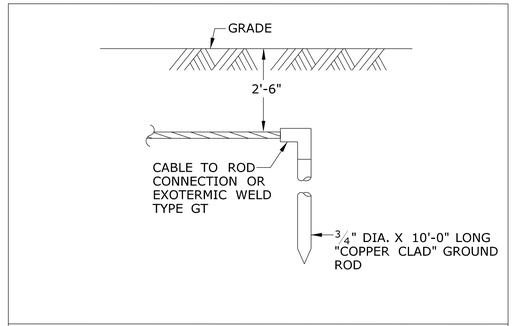

GROUNDING ROD DETAIL

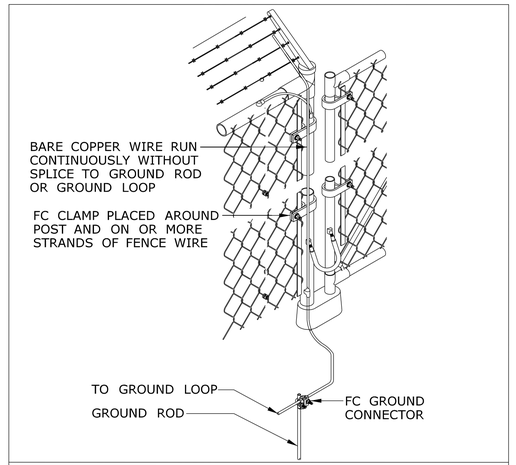

FENCE POST GROUNDING DETAIL

REV.	DATE	REVISION DESCRIPTION	SHEET NO.
-	-	-	-
-	-	-	-
-	-	-	-
-	-	-	-
-	-	-	-
-	-	-	-

THE INFORMATION, INCLUDING ESTIMATED QUANTITIES OF WORK, SHOWN ON THESE SHEETS IS BASED ON LIMITED INVESTIGATIONS BY THE STATE AND IS IN NO WAY WARRANTED TO INDICATE THE CONDITIONS OF ACTUAL QUANTITIES OF WORK WHICH WILL BE REQUIRED.

Plotted Date: 8/18/2014

DESIGNER/DRAFTER: **D. CHERBELEATA**
CHECKED BY: **D. NEWMAN**
SCALE: 3/8" = 1'-0"

STATE OF CONNECTICUT
DEPARTMENT OF TRANSPORTATION

Filename: ...\FA..CGR..CPS..0170-2296..063...05..FEL...601

SIGNATURE/BLOCK:
Hatch Mott MacDonald
Suite 100, North Lobby
400 Blue Hill Drive
Westwood, MA 02090

PROJECT TITLE: **NEW HAVEN - HARTFORD SPRINGFIELD RAIL CORRIDOR**

TOWN: **HARTFORD**

DRAWING TITLE: **GROUNDING DETAILS**

PROJECT NO. **170-3261**
DRAWING NO. **FEL-601**
SHEET NO. **13.011**

NOTES:

1. SEE DWG. FLI-801 FOR PANEL SCHEDULES.
2. NEW METER TO BE INSTALLED IN THE NORTH METERING BANK (IN ROOM 156) IN ANY AVAILABLE COMPARTMENT BY CL&P.
3. CONTRACTOR TO COORDINATE METERING REQUIREMENTS WITH CL&P.
4. CONTRACTOR IS RESPONSIBLE FOR THE INSTALLATION DOWNSTREAM OF THE METER.

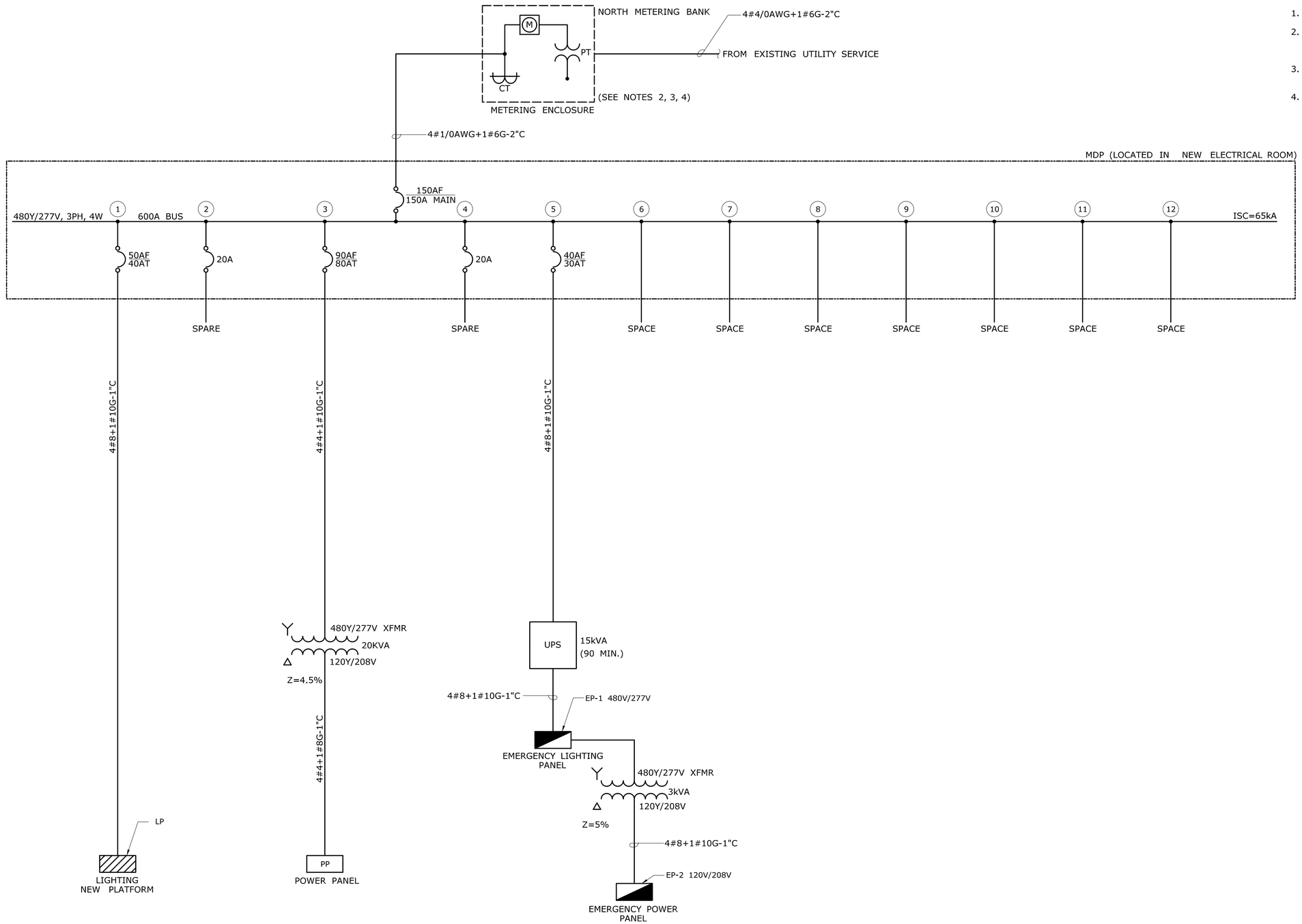

REV.	DATE	REVISION DESCRIPTION	SHEET NO.
-	-	-	-
-	-	-	-
-	-	-	-
-	-	-	-
-	-	-	-
-	-	-	-

THE INFORMATION, INCLUDING ESTIMATED QUANTITIES OF WORK, SHOWN ON THESE SHEETS IS BASED ON LIMITED INVESTIGATIONS BY THE STATE AND IS IN NO WAY WARRANTED TO INDICATE THE CONDITIONS OF ACTUAL QUANTITIES OF WORK WHICH WILL BE REQUIRED.

Plotted Date: 8/18/2014

DESIGNER/DRAFTER: **D.CHERBELEATA**

CHECKED BY: **D. NEWMAN**

SCALE AS NOTED

STATE OF CONNECTICUT
DEPARTMENT OF TRANSPORTATION

Filename: ...\FA..CGR..CPS..0170-2296..063...05..FEL...701

SIGNATURE/ BLOCK:

STATE OF CONNECTICUT ROBIN K. GRANTHOUT 25 LICENSED PROFESSIONAL ENGINEER

Hatch Mott MacDonald
Suite 100, North Lobby
400 Blue Hill Drive
Westwood, MA 02090

PROJECT TITLE:

NEW HAVEN-HARTFORD SPRINGFIELD RAIL CORRIDOR

TOWN: **HARTFORD**

DRAWING TITLE: **GENERAL ARRANGEMENT ONE-LINE DIAGRAM**

PROJECT NO. **170-3261**

DRAWING NO. **FEL-701**

SHEET NO. **13.012**

NOTES:

1. DEMOLISH AND REMOVE LIGHT FIXTURES AS SHOWN.
2. DEMOLISH LIGHTING CONDUIT & CABLE BACK TO EXISTING PANEL.
3. SEE ARCHITECTURAL DWG. ARC-102 FOR EXISTING ELEVATOR AND VESTIBULE ROOM DEMOLITION NOTES.

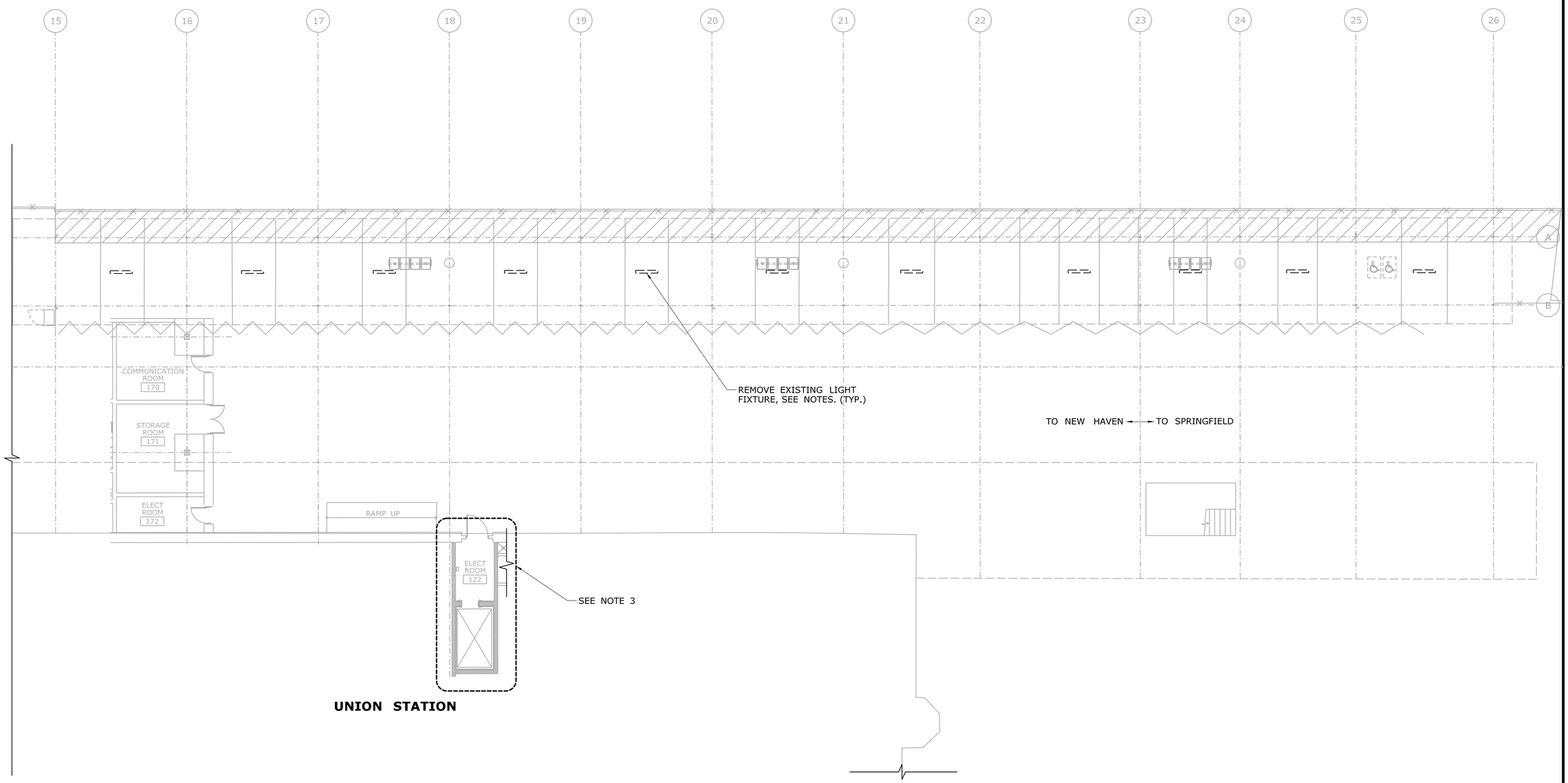

PLATFORM PLAN
SCALE: 1" = 10'

REV.	DATE	REVISION DESCRIPTION	SHEET NO.
-	-	-	-
-	-	-	-
-	-	-	-
-	-	-	-
-	-	-	-
-	-	-	-

THE INFORMATION, INCLUDING ESTIMATED QUANTITIES OF WORK, SHOWN ON THESE SHEETS IS BASED ON LIMITED INVESTIGATIONS BY THE STATE AND IS IN NO WAY WARRANTED TO INDICATE THE CONDITIONS OF ACTUAL QUANTITIES OF WORK WHICH WILL BE REQUIRED.

Plotted Date: 8/19/2014

DESIGNER/DRAFTER: **D.CHERBELEATA**
CHECKED BY: **D.NEWMAN**
SCALE AS NOTED

STATE OF CONNECTICUT
DEPARTMENT OF TRANSPORTATION

Filename: ...\FA_CGR_CPS_0170-2296_063_05_FLI_200.dgn

SIGNATURE/BLOCK:
STATE OF CONNECTICUT · ROBERT E. GRANTGUM · LICENSED PROFESSIONAL ENGINEER

Hatch Mott MacDonald
Suite 100, North Lobby
400 Blue Hill Drive
Westwood, MA 02090

PROJECT TITLE:
NEW HAVEN - HARTFORD SPRINGFIELD RAIL CORRIDOR

TOWN: **HARTFORD**

DRAWING TITLE: **LIGHTING DEMOLITION PLAN**

PROJECT NO. **170-3261**
DRAWING NO. **FLI-200**
SHEET NO. **13.013**

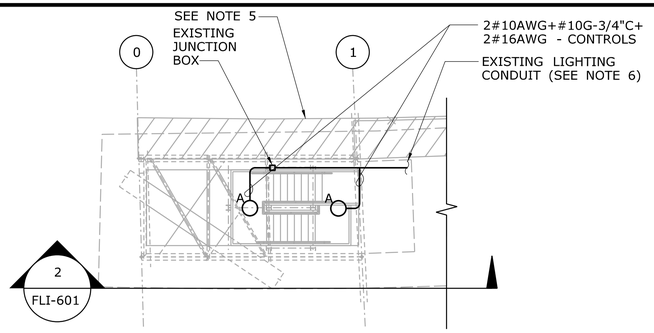

SOUTH END STAIR LIGHTING

SCALE: 1" = 10'

NOTES:

1. CONDUIT SIZES ARE PER NEC 2011 WITH ALLOWANCE FOR EXTRA CONDUCTORS.
2. CONDUIT ROUTES ARE SHOWN DIAGRAMMATICALLY. CONTRACTOR TO ENSURE CONDUITS ARE RUN PARALLEL TO THE EXISTING FRAMING AND TIGHT TO THE STRUCTURES.
3. CONTRACTOR SHALL BE RESPONSIBLE FOR ALL FIELD COORDINATION AND MEASUREMENTS.
4. EMERGENCY BLUE LIGHT STATIONS (SHOWN ON DWG. FEL-101) TO BE RUN WITH EMERGENCY LIGHTING CIRCUITS.
5. SEE DETAIL NO. 2 ON DWG. FLI-601 FOR ALL LIGHTING FIXTURES AT SOUTH STAIR SECTION. CONTRACTOR TO COORDINATE NEW FIXTURES "A" LOCATION WITH CANOPY FRAMING BAY SPACING.
6. SOUTH STAIR ADDITIONAL FIXTURES TO BE FED FROM EXISTING LIGHTING CIRCUIT. CONTRACTOR TO COORDINATE CIRCUITS AND CONTROLS.

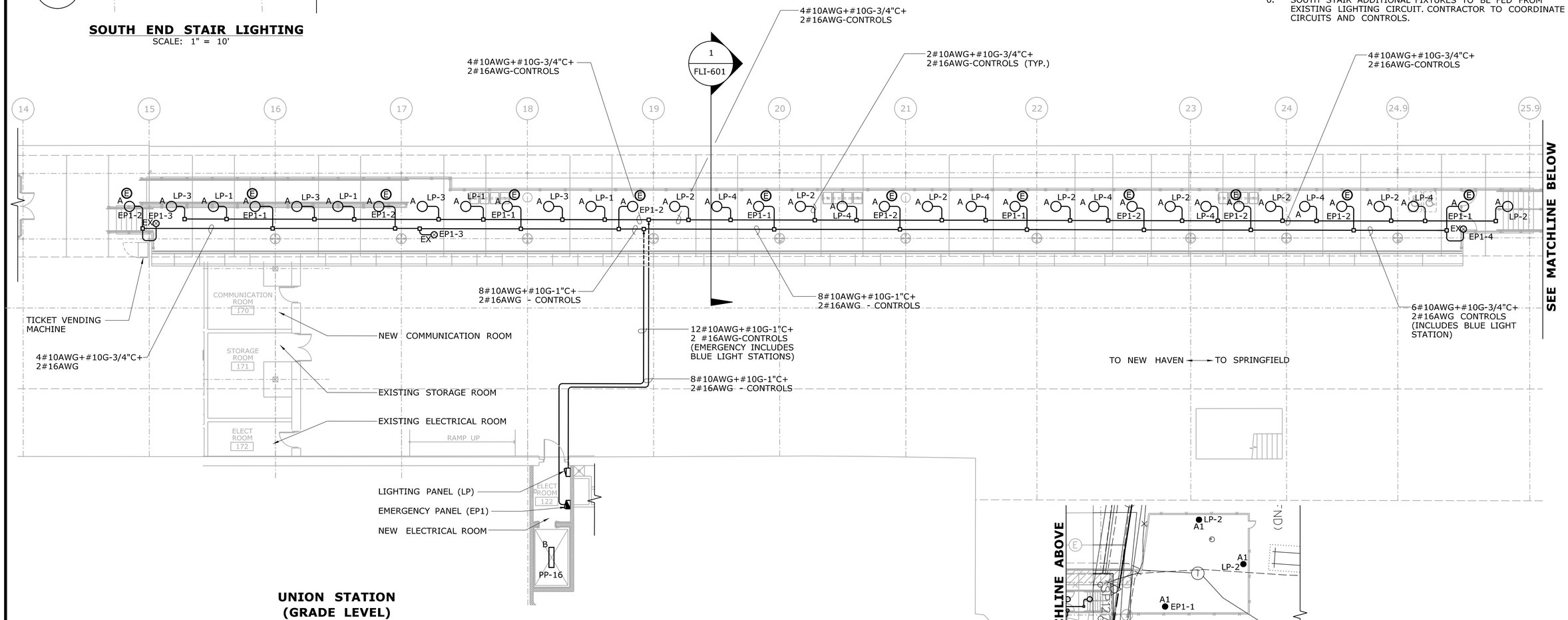

UNION STATION (GRADE LEVEL)

PLATFORM PLAN

SCALE: 1" = 10'

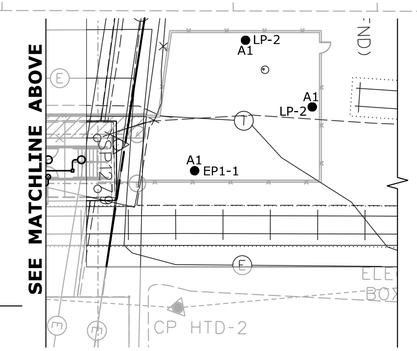

SAFE DISPERAL AREA DETAIL

SCALE: 1" = 20'

REV.	DATE	REVISION DESCRIPTION	SHEET NO.
-	-	-	-
-	-	-	-
-	-	-	-
-	-	-	-
-	-	-	-
-	-	-	-

THE INFORMATION, INCLUDING ESTIMATED QUANTITIES OF WORK, SHOWN ON THESE SHEETS IS BASED ON LIMITED INVESTIGATIONS BY THE STATE AND IS IN NO WAY WARRANTED TO INDICATE THE CONDITIONS OF ACTUAL QUANTITIES OF WORK WHICH WILL BE REQUIRED.

Plotted Date: 8/19/2014

DESIGNER/DRAFTER: D.CHERBELEATA
CHECKED BY: D.NEWMAN
SCALE AS NOTED

STATE OF CONNECTICUT
DEPARTMENT OF TRANSPORTATION

Filename: ...\FA_CGR_CPS_0170-2296_063_05_FLI_201.dgn

SIGNATURE/BLOCK:
Hatch Mott MacDonald
Suite 100, North Lobby
400 Blue Hill Drive
Westwood, MA 02090

PROJECT TITLE: NEW HAVEN - HARTFORD SPRINGFIELD RAIL CORRIDOR

TOWN: HARTFORD

DRAWING TITLE: LIGHTING PLATFORM PLAN

PROJECT NO. 170-3261
DRAWING NO. FLI-201
SHEET NO. 13.014

NOTES:

1. CONTRACTOR TO FEED NEW LIGHTING FIXTURES TYPES A, S1 AND S2 FROM EXISTING CIRCUITS.
2. CONTRACTOR TO PERFORM FIELD MEASUREMENTS FOR THE FINAL HANDRAIL LIGHTING FITTING AND SUBMIT A PHOTOMETRIC ANALYSIS.
3. CONTRACTOR SHALL COORDINATE POWER SUPPLY & DRIVERS TO HANDRAIL FIXTURES WITH STAIR RAILS SO THAT IT RUNS CONCEALED WITHIN STRUCTURAL MEMBERS.
4. CONDUITS & DRIVERS TO BE LOCATED UNDER STAIRWAY & LANDINGS, AS CONCEALED AS POSSIBLE.

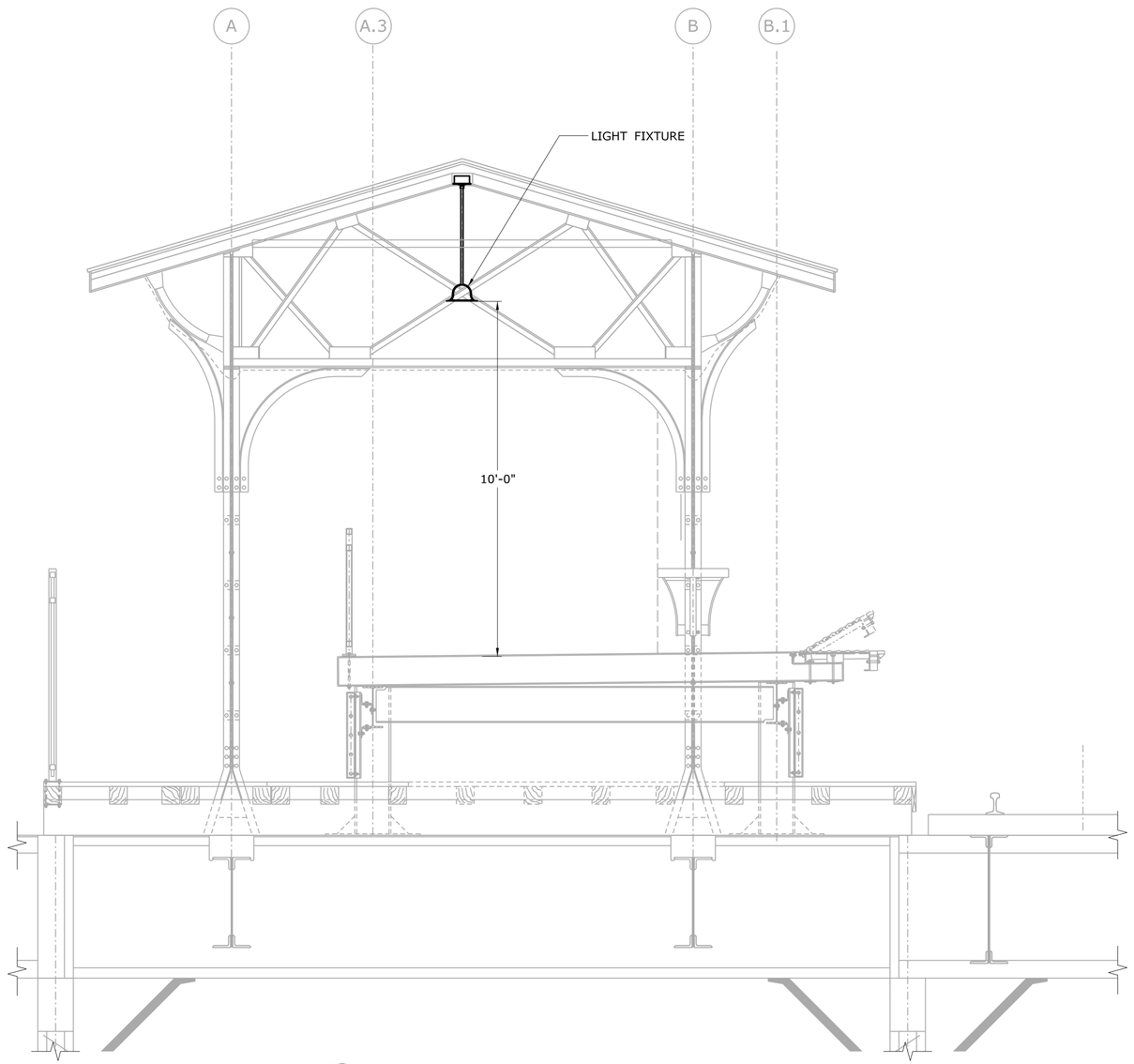

1 FLI-201 **LIGHT FIXTURE MOUNTING SECTION**
SCALE: 1/2" = 1'-0"

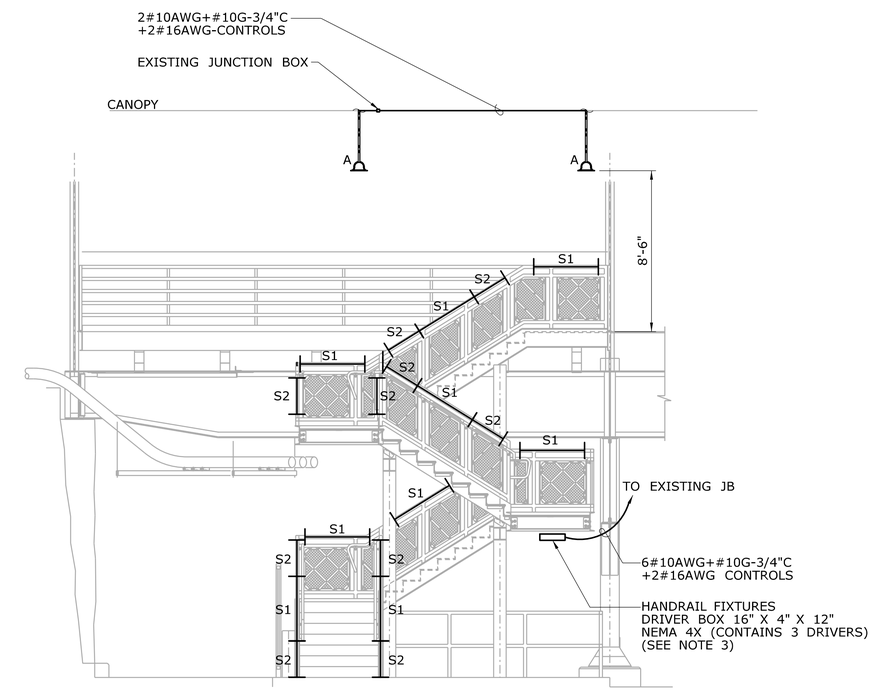

2 FLI-201 **SOUTH STAIR LIGHTING**
SCALE: 1/4" = 1'-0"

REV.	DATE	REVISION DESCRIPTION	SHEET NO.
-	-	-	-
-	-	-	-
-	-	-	-
-	-	-	-
-	-	-	-
-	-	-	-

THE INFORMATION, INCLUDING ESTIMATED QUANTITIES OF WORK, SHOWN ON THESE SHEETS IS BASED ON LIMITED INVESTIGATIONS BY THE STATE AND IS IN NO WAY WARRANTED TO INDICATE THE CONDITIONS OF ACTUAL QUANTITIES OF WORK WHICH WILL BE REQUIRED.

Plotted Date: 8/18/2014

DESIGNER/DRAFTER: D. CHERBELEATA
CHECKED BY: D. NEWMAN
SCALE AS NOTED

STATE OF CONNECTICUT
DEPARTMENT OF TRANSPORTATION

Filename: ...\FA_CGR_CPS_0170-2296_063__05_FLI__601.dgn

SIGNATURE/BLOCK:
STATE OF CONNECTICUT ROBIN S. GRAMLICH LICENSED PROFESSIONAL ENGINEER
Hatch Mott MacDonald
Suite 100, North Lobby
400 Blue Hill Drive
Westwood, MA 02090

PROJECT TITLE: NEW HAVEN - HARTFORD SPRINGFIELD RAIL CORRIDOR

TOWN: HARTFORD

DRAWING TITLE: LIGHTING DETAILS

PROJECT NO. 170-3261
DRAWING NO. FLI-601
SHEET NO. 13.015

HARTFORD - NEW ELECTRICAL ROOM

PANEL PP
LOCATION ELECTRICAL ROOM
VOLT'S 208/120V
PHASE 3
WIRE 4
SOLID NEUTRAL. YES W/GROUND BUS 14kA 80A MB

FED FROM MDP
NEMA 1 ENCLOSURE

CONDUCTOR/CONDUIT	CIRCUIT DESCRIPTION	CKT. BKR. NO.	TRIP	POLE	KVA	Ø	KVA	CKT. BKR. POLE	TRIP	NO.	CIRCUIT DESCRIPTION	CONDUCTOR/CONDUIT
2#10AWG+1#10G-1"C	CAMERAS SOUTH 3	1	20	1	0.13	A	0.13	1	20	2	CAMERAS NORTH 3	2#10AWG+1#10G-1"C
2#10AWG+1#10G-1"C	PIDS SOUTH 3	3	20	1	0.3	B	0.3	1	20	4	PIDS NORTH 3	2#10AWG+1#10G-1"C
2#10AWG+1#10G-1"C	TVM PLATFORM	5	20	1	0.75	C	0.75	1	20	6	TVM STATION	2#10AWG+1#10G-1"C
2#10AWG+1#10G-1"C	ACCU-1 & AC-1 (3HP)	7	20	2	2.75	A	0.54	1	20	8	RECEPTACLES ELEC. RM.	2#10AWG+1#10G-3/4"C
						B	0.54	1	20	10	RECEPTACLES COMM. RM.	2#10AWG+1#10G-3/4"C
2#10AWG+1#10G-3/4"C	ACCU-2 & AC-2 (3HP)	11	20	2	2.75	C	0.72	1	20	12	RECEPTACLES COMM. RM.	2#10AWG+1#10G-3/4"C
						A	0.02	1	20	14	CP2 (⅓HP)	2#10AWG+1#10G-1"C
2#10AWG+1#10G-1"C	CP1 (⅓HP)	15	20	1	0.02	B	0.64	1	20	16	RECEPT. & LIGHTING NEW EL. RM	2#10AWG+1#10G-3/4"C

A PH.: 3.56 | B PH.: 3.18 | C PH.: 3.6

TOTAL kVA = 8.44

HARTFORD - NEW ELECTRICAL ROOM

PANEL LP
LOCATION ELECTRICAL ROOM
VOLT'S 480V/277V
PHASE 3
WIRE 4
SOLID NEUTRAL. YES W/GROUND BUS 14kA 40A MB

FED FROM MDP
NEMA 1 ENCLOSURE

CONDUCTOR/CONDUIT	CIRCUIT DESCRIPTION	CKT. BKR. NO.	TRIP	POLE	KVA	Ø	KVA	CKT. BKR. POLE	TRIP	NO.	CIRCUIT DESCRIPTION	CONDUCTOR/CONDUIT
2#10AWG+1#10G-1"C	LTG. SOUTH	*1	20	1	0.18	A	0.36	1	20	2*	LTG. NORTH	2#10AWG+1#10G-1"C
2#10AWG+1#10G-1"C	LTG. SOUTH	*3	20	1	0.18	B	0.31	1	20	4*	LTG. NORTH	2#10AWG+1#10G-1"C
2#10AWG+1#10G-3/4"C	LTG. RELAY PANELS	5	15	1	0.18	C	--	1	20	6		
		7	20	1	--	A	--	1	20	8		
		9	20	1	--	B	--	1	20	10		
		11	20	1	--	C	--	1	20	12		

A PH.: 0.54 | B PH.: 0.49 | C PH.: 0.18

TOTAL kVA = 1.21

HARTFORD - NEW ELECTRICAL ROOM

PANEL EP-1
LOCATION ELECTRICAL ROOM
VOLT'S 480/277V
PHASE 3
WIRE 4
SOLID NEUTRAL. YES W/GROUND BUS 14kA 40A MB

FED FROM UPS
NEMA 1 ENCLOSURE

CONDUCTOR/CONDUIT	CIRCUIT DESCRIPTION	CKT. BKR. NO.	TRIP	POLE	KVA	Ø	KVA	CKT. BKR. POLE	TRIP	NO.	CIRCUIT DESCRIPTION	CONDUCTOR/CONDUIT
2#10AWG+1#10G-1"C	EMERG. LTG. SOUTH & NORTH	*1	15	1	0.27	A	0.27	1	15	2*	EMERG. LTG. SOUTH & NORTH	2#10AWG+1#10G-1"C
2#10AWG+1#10G-1"C	EXIT SIGNS SOUTH	3	15	1	0.01	B	0.01	1	15	4	EXIT SIGNS NORTH	2#10AWG+1#10G-1"C
2#10AWG+1#10G-1"C	XFMR TO EP-2	5	15	1	3	C	--	1	15	6	SPARE	
	SPARE	7	15	1	--	A	--	1	15	8	SPARE	
	SPARE	9	15	1	--	B	--	1	15	10	SPARE	
	SPARE	11	15	1	--	C	--	1	15	12	SPARE	

A PH.: 0.54 | B PH.: 0.02 | C PH.: 3

TOTAL kVA = 3.56

HARTFORD - NEW ELECTRICAL ROOM

PANEL MDP
LOCATION ELECTRICAL ROOM
VOLT'S 480/277V
PHASE 3
WIRE 4
SOLID NEUTRAL. YES W/GROUND BUS 65kA 150A MB

FED FROM NORTH BANK
NEMA 1 ENCLOSURE

CONDUCTOR/CONDUIT	CIRCUIT DESCRIPTION	CKT. BKR. NO.	TRIP	POLE	KVA	Ø	KVA	CKT. BKR. POLE	TRIP	NO.	CIRCUIT DESCRIPTION	CONDUCTOR/CONDUIT
4#8AWG+1#10G-1"C	LP (PANEL LIGHTING PLATFORM)	1	40	3	3.99	A	--	3	20	2	SPARE	
4#8AWG+1#10G-1"C	UPS TO EP-1 (EMERG. LIGHTING PNL.)	3	30	3	15	B	--	3	20	4	SPARE	
4#4AWG+1#8G-1"C	XFMR TO PANEL PP (POWER PANEL)	5	80	3	20	C	--	3	20	6	SPARE	
	SPACE				--	A	--				SPACE	
	SPACE				--	B	--				SPACE	
	SPACE				--	C	--				SPACE	
	SPACE				--	A	--				SPACE	
	SPACE				--	B	--				SPACE	

A PH.: 1.20 | B PH.: 15 | C PH.: 20

TOTAL kVA = 36.2

HARTFORD - NEW ELECTRICAL ROOM

PANEL EP-2
LOCATION ELECTRICAL ROOM
VOLT'S 120/208V
PHASE 3
WIRE 4
SOLID NEUTRAL. YES W/GROUND BUS 14kA 40A MB

FED FROM EP-1
NEMA 1 ENCLOSURE

CONDUCTOR/CONDUIT	CIRCUIT DESCRIPTION	CKT. BKR. NO.	TRIP	POLE	KVA	Ø	KVA	CKT. BKR. POLE	TRIP	NO.	CIRCUIT DESCRIPTION	CONDUCTOR/CONDUIT
2#10AWG+1#10G-1"C	BLUE LIGHTS SOUTH	1	15	1	0.11	A	0.22	1	15	2	BLUE LIGHTS NORTH	2#10AWG+1#10G-1"C
2#10AWG+1#10G-1"C	PIDS RACK	3	15	1	0.27	B	0.27	1	15	4	TELECOM RACK	2#10AWG+1#10G-1"C
2#10AWG+1#10G-1"C	VSS RACK	5	15	1	0.27	C	0.27	1	15	6	TVM RACK	2#10AWG+1#10G-1"C
	SPARE	7	15	1	--	A	--	1	15	8	SPARE	
	SPARE	9	15	1	--	B	--	1	15	10	SPARE	
	SPARE	11	15	1	--	C	--	1	15	12	SPARE	

A PH.: 0.33 | B PH.: 0.54 | C PH.: 0.54

TOTAL kVA = 1.41

NOTES:

1. CONDUCTORS ARE GROUPED BY VOLTAGE SYSTEMS AND RUN TOGETHER IN CONDUITS WHEN POSSIBLE, SEE PLANS SERIES 'FEL' FOR ADDITIONAL INFORMATION ON CONDUITS AND ONE LINE DIAGRAM ON FEL-701.
2. MINIMUM CONDUIT SIZE IS 3/4".
3. EMERGENCY SYSTEMS ARE SEGREGATED FROM OTHER SYSTEMS.
4. BLUE LIGHT STATIONS CIRCUITS ARE RUN WITH EMERGENCY LIGHTING.
5. CIRCUITS SHOWN WITH AN ASTERISK ARE CONNECTED TO LIGHTING CONTROL PANEL.

REV.	DATE	REVISION DESCRIPTION	SHEET NO.
-	-	-	-
-	-	-	-
-	-	-	-
-	-	-	-
-	-	-	-
-	-	-	-

THE INFORMATION, INCLUDING ESTIMATED QUANTITIES OF WORK, SHOWN ON THESE SHEETS IS BASED ON LIMITED INVESTIGATIONS BY THE STATE AND IS IN NO WAY WARRANTED TO INDICATE THE CONDITIONS OF ACTUAL QUANTITIES OF WORK WHICH WILL BE REQUIRED.

Plotted Date: 8/18/2014

DESIGNER/DRAFTER: D.CHERBELEATA
CHECKED BY: D. NEWMAN
NOT TO SCALE

STATE OF CONNECTICUT
DEPARTMENT OF TRANSPORTATION

Filename: ...\FA_CGR_CPS_0170-2296_063__05_FLI__801.dgn

SIGNATURE/BLOCK:
STATE OF CONNECTICUT BROWN & GRANTSON LICENSED PROFESSIONAL ENGINEER
Hatch Mott MacDonald
Suite 100, North Lobby
400 Blue Hill Drive
Westwood, MA 02090

PROJECT TITLE:
NEW HAVEN - HARTFORD
SPRINGFIELD
RAIL CORRIDOR

TOWN: HARTFORD

DRAWING TITLE: LIGHTING PANEL SCHEDULE

PROJECT NO. 170-3261
DRAWING NO. FLI-801
SHEET NO. 13.016

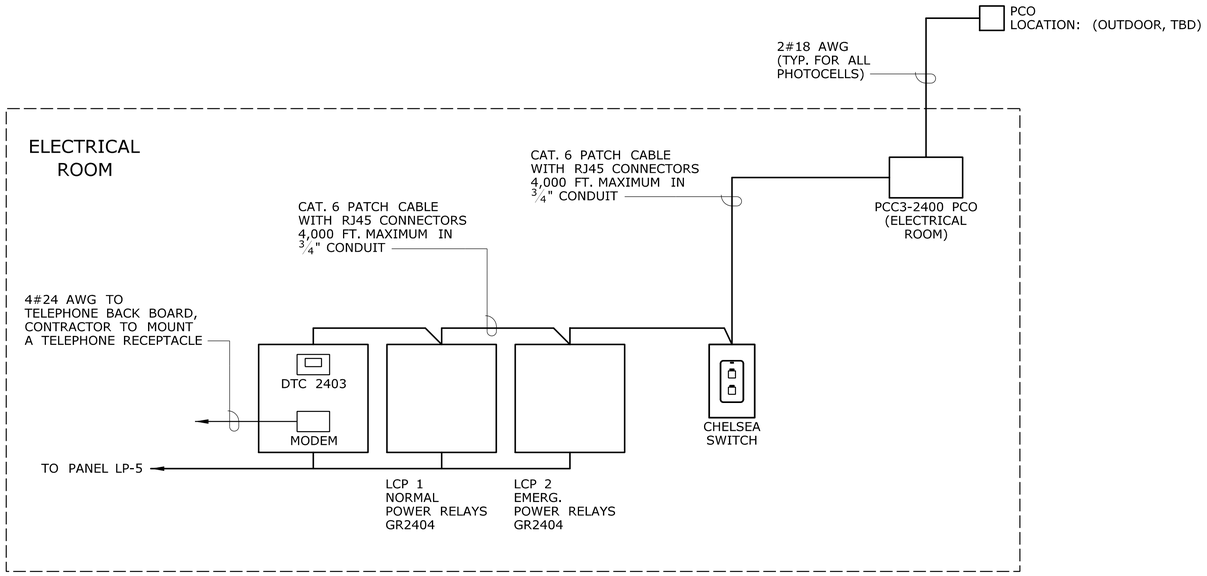

TYPICAL CONTROL SYSTEM SINGLE LINE DIAGRAM

SCALE: NTS

ID: LCP 1
LOCATION: ELECTRICAL ROOM
SUPPLY CIRCUIT: LP-5 VOLTAGE: 277V

RELAY PANEL SCHEDULE - LCP 1 - PLATFORM-NORMAL

RELAY	ZONE	TYPE	SOURCE	DESCRIPTION	RELAY	ZONE	TYPE	SOURCE	DESCRIPTION
1	--	NC	LP	LP-1	2				SPARE
3	--	NC	LP	LP-2	4				SPARE
5	--	NC	LP	LP-3	6				SPARE
7	--	NC	LP	LP-4	8				SPARE

ID: LCP 2
LOCATION: ELECTRICAL ROOM
SUPPLY CIRCUIT: LP-5 VOLTAGE: 277V

RELAY PANEL SCHEDULE - LCP 2 - PLATFORM-EMERGENCY

RELAY	ZONE	TYPE	SOURCE	DESCRIPTION	RELAY	ZONE	TYPE	SOURCE	DESCRIPTION
1	--	NC	EP1	EP1-1	2				SPARE
3	--			EP1-2	4				SPARE
5				SPARE	6				SPARE
7				SPARE	8				SPARE

NOTES:

1. DAISY-CHAIN CAT. 6 PATCH CABLE WITH RJ45 CONNECTORS FROM DIGITAL DEVICE TO DIGITAL DEVICE.
2. REFER TO MANUFACTURERS INSTRUCTIONS FOR LONG DISTANCE RUNS BETWEEN DIGITAL DEVICES.
3. UP TO 4,000 FT. TOTAL BUS LENGTH.
4. CRIMP AND TEST EACH CABLE WITH ALAN CIRCUIT TESTER PRIOR TO INSTALLATION.
5. CONTRACTOR TO COORDINATE SWITCHING SEQUENCE WITH THE EXISTING PLATFORM CONTROL SYSTEM.

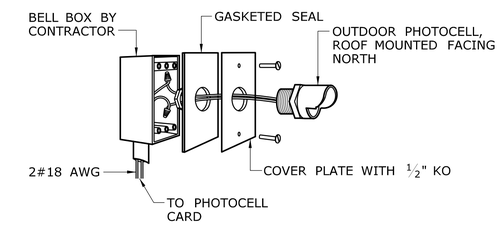

OUTDOOR PHOTOCELL

SCALE: NTS

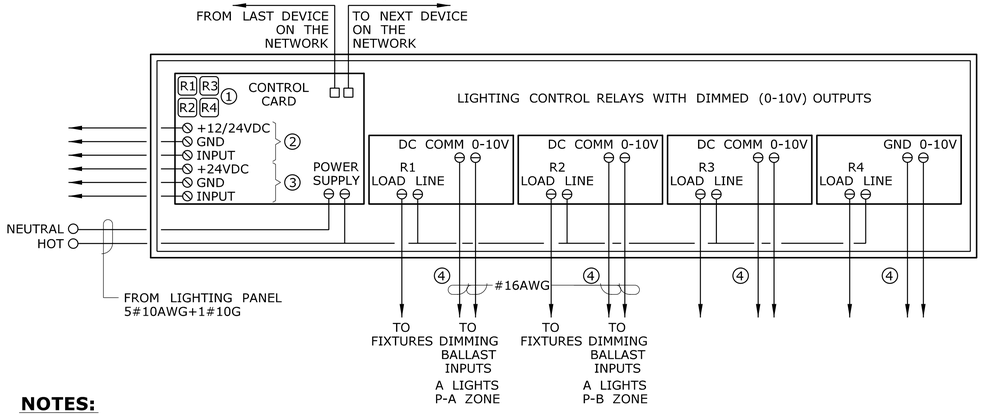

NOTES:

1. MANUAL SWITCH BUTTONS FOR EACH RELAY.
2. OCCUPANCE SENSOR INPUTS, TYPICAL OF 2, WILL OPERATE WITH ANY LOW VOLTAGE OCCUPANCY SENSOR. POWER SUPPLY OUT FOR 12V, 15V OR 24V SENSORS, 3#18 AWG SHIELDED.
3. PHOTOCELLS INPUTS, TYPICAL OF 2, SPECIFY INDOOR PHOTOCELL (PCI) 3#18 AWG SHIELDED. PHOTOCELLS MUST BE ABLE TO CONTROL RELAYS AT EXACT FOOTCANDLE LEVELS (CALLED TRIGGERS). TRIGGERS SHALL BE ADJUSTABLE FOR EACH RELAY, AND SHALL BE PROGRAMMED FROM THE DTC IN THE MASTER RELAY PANEL OR FROM A DESKTOP COMPUTER.
4. MATRIXABLE CONTACT CLOSURE INPUTS PROGRAMMABLE FOR MOMENTARY OR MAINTAINED TYPE SWITCHES, INCLUDING STANDARD STRAP MOUNT WALL SWITCHES.
5. LIGHTING RELAYS: N/C, ZERO CROSS, 20A, 277V.

TYPICAL GR 2400I (2404 AND 2408) - DIM WIRING DETAIL

SCALE: NTS

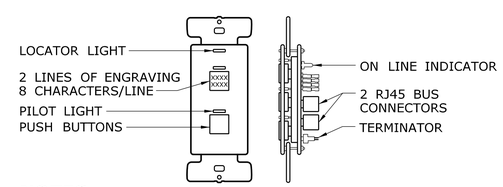

NOTES:

1. SWITCH BUTTONS ARE FACTORY ENGRAVED.
2. PUSH BUTTONS MAY CONTROL ANY RELAY(S) IN ANY COMBINATION.
3. LED PILOT LIGHTS INDICATE STATUS.
4. SWITCH LINKED TO THE GR 2400 DIGITAL BUS VIA CAT. 6 PATCH CABLE WITH RJ45 CONNECTORS.
5. DECORA STYLE FACE PLATE BY CONTRACTOR.

CHELSEA DIGITAL SWITCH

SCALE: NTS

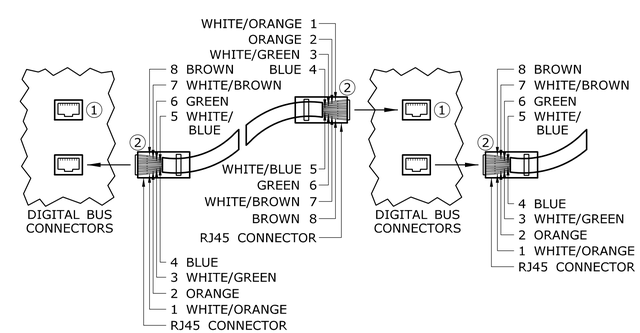

① RJ45 DIGITAL BUS CONNECTORS ARE LOCATED ON EVERY DIGITAL DEVICE (DIGITAL DEVICES ARE DEFINED AS: RELAY PANELS, DIGITAL SWITCHES AND ALL DIGITAL ACCESSORIES).

② RJ45 CONNECTORS USE THE SAME COLOR CODING AS ETHERNET, AND ARE MADE AS STRAIGHT THROUGH CABLES. CROSS OVER CABLES WILL CAUSE SYSTEM FAILURE. ALL CABLES SUPPLIED BY CONTRACTOR.

TYPICAL LOW VOLTAGE NETWORK HOOK UP

SCALE: NTS

REV.	DATE	REVISION DESCRIPTION	SHEET NO.
-	-	-	-
-	-	-	-
-	-	-	-
-	-	-	-
-	-	-	-
-	-	-	-

THE INFORMATION, INCLUDING ESTIMATED QUANTITIES OF WORK, SHOWN ON THESE SHEETS IS BASED ON LIMITED INVESTIGATIONS BY THE STATE AND IS IN NO WAY WARRANTED TO INDICATE THE CONDITIONS OF ACTUAL QUANTITIES OF WORK WHICH WILL BE REQUIRED.

Plotted Date: 8/18/2014

DESIGNER/DRAFTER: D.CHERBELEATA
CHECKED BY: D. NEWMAN

STATE OF CONNECTICUT
DEPARTMENT OF TRANSPORTATION

Filename: ...\FA_CGR_CPS_0170-2296_063__05_FLI__802.dgn

SIGNATURE/BLOCK:
STATE OF CONNECTICUT
JOHN K. GRANT
LICENSED PROFESSIONAL ENGINEER

Hatch Mott MacDonald
Suite 100, North Lobby
400 Blue Hill Drive
Westwood, MA 02090

PROJECT TITLE:
NEW HAVEN - HARTFORD
SPRINGFIELD
RAIL CORRIDOR

TOWN: HARTFORD

DRAWING TITLE:
LIGHTING CONTROL
ONE-LINE DIAGRAM

PROJECT NO. 170-3261
DRAWING NO. FLI-802
SHEET NO. 13.017

COMMUNICATION:

ANTENNA

COMMUNICATION ENCLOSURE/RACK

BLUE LIGHT/EMERGENCY CALL STATION

PUBLIC ADDRESS SPEAKER

PASSENGER INFORMATION DISPLAY SIGN TYPE E2

PASSENGER INFORMATION DISPLAY SIGN TYPE E3e

SIGN SCHEDULE

SIGN TYPE	USE/DESCRIPTION	CONTENT	MOUNTING
E2	NEXT TRAIN INFORMATION/DATE & TIME	VISUAL ECHO OF AUDIO ANNOUNCEMENTS	SUSPENDED FROM CANOPY (DOUBLE-SIDED)
E3e	VARIABLE MESSAGING	VISUAL ECHO OF AUDIO ANNOUNCEMENTS	SUSPENDED FROM CANOPY (DOUBLE-SIDED)

NOTES:

1. MOUNTING HEIGHT OF TELEPHONE PER ADA STANDARDS.
2. PIDS SIGNAGE PER AMTRAK GRAPHIC SIGNAGE STANDARD MANUAL (LATEST EDITION).

ABBREVIATIONS:

TVM	TICKET VENDING MACHINE
PIDS	PASSENGER INFORMATION DISPLAY SYSTEM
VSS	VIDEO SURVEILLANCE SYSTEM

REV.	DATE	REVISION DESCRIPTION	SHEET NO.
-	-	-	-
-	-	-	-
-	-	-	-
-	-	-	-
-	-	-	-
-	-	-	-

THE INFORMATION, INCLUDING ESTIMATED QUANTITIES OF WORK, SHOWN ON THESE SHEETS IS BASED ON LIMITED INVESTIGATIONS BY THE STATE AND IS IN NO WAY WARRANTED TO INDICATE THE CONDITIONS OF ACTUAL QUANTITIES OF WORK WHICH WILL BE REQUIRED.

Plotted Date: 8/18/2014

DESIGNER/DRAFTER: **D. CHERBELEATA**

CHECKED BY: **D. NEWMAN**

NOT TO SCALE

STATE OF CONNECTICUT
DEPARTMENT OF TRANSPORTATION

Filename: ...\FA..CGR..CPS..0170-2296..063...05..FCI...001.dgn

SIGNATURE/ BLOCK:

STATE OF CONNECTICUT ROBIN E. GRANTHAM 25 LICENSED PROFESSIONAL ENGINEER

Hatch Mott MacDonald
Suite 100, North Lobby
400 Blue Hill Drive
Westwood, MA 02090

PROJECT TITLE:

NEW HAVEN-HARTFORD SPRINGFIELD RAIL CORRIDOR

TOWN: **HARTFORD**

DRAWING TITLE: **COMM. SYSTEMS GEN. NOTES, LEGEND & ABBREV.**

PROJECT NO. **170-3261**

DRAWING NO. **FCI-001**

SHEET NO. **13.018**

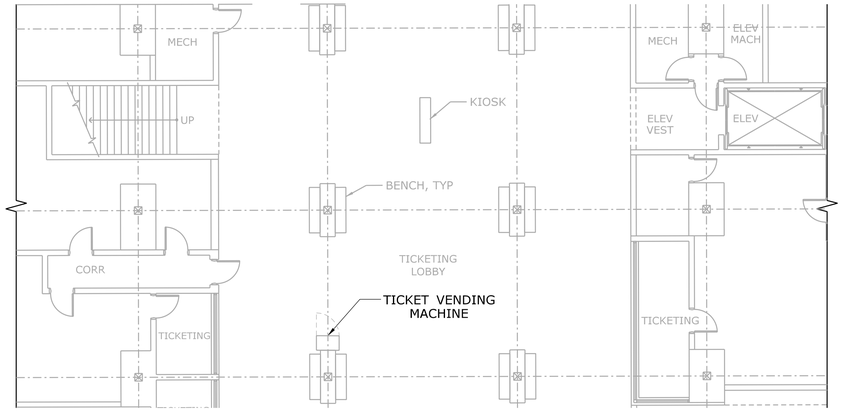

STATION TICKETING GRADE LEVEL - PARTIAL PLAN

SCALE: 1" = 10'-0"

NOTES:

1. REFER TO LEGEND SYMBOLS ON DWG. FCI-001.
2. REFER TO RISER DIAGRAMS ON DWGS. FCI-701/FCI-702, FOR EQUIPMENT AND CABLE DETAILS.
3. CONTRACTOR SHALL COORDINATE ROUTING OF TELEPHONE AND COMMUNICATION CABLE/CONDUIT TO POLE WITH TELCO IN FIELD.

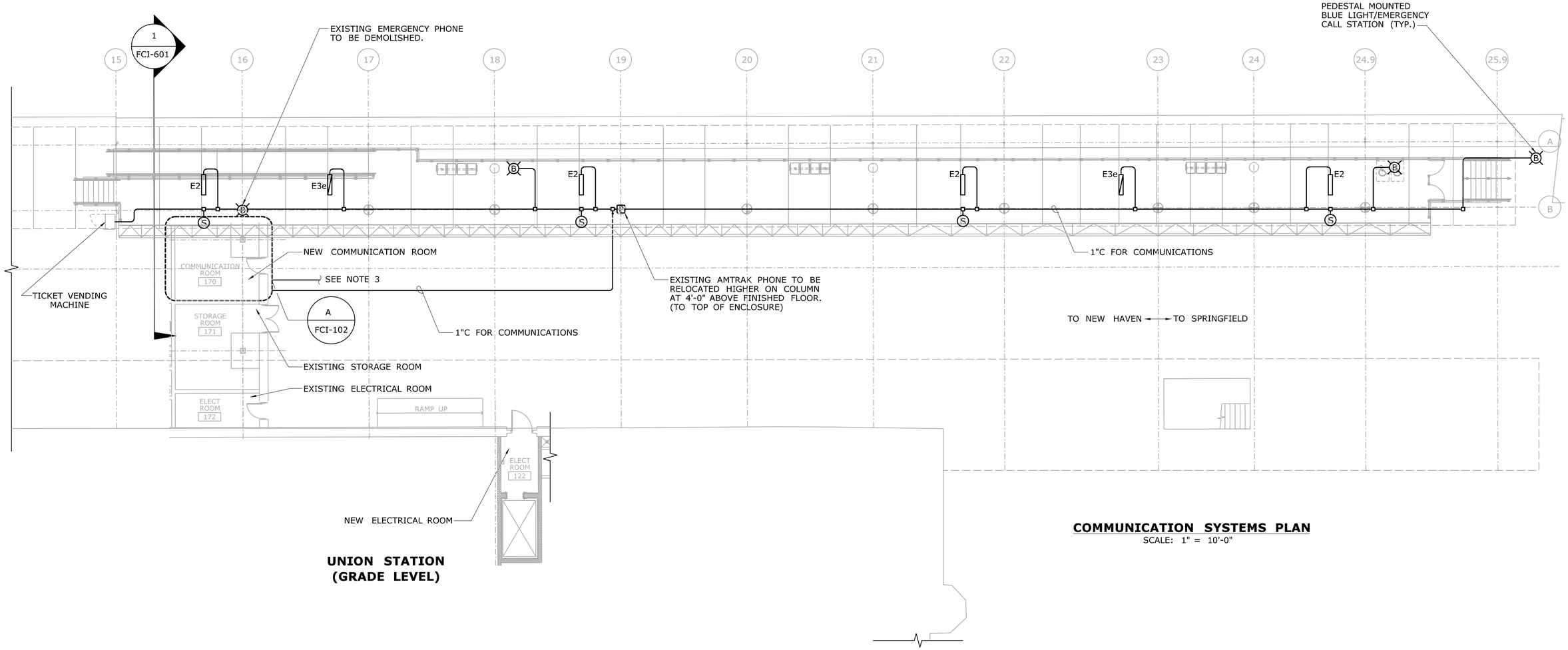

UNION STATION (GRADE LEVEL)

COMMUNICATION SYSTEMS PLAN

SCALE: 1" = 10'-0"

REV.	DATE	REVISION DESCRIPTION	SHEET NO.
-	-	-	-
-	-	-	-
-	-	-	-
-	-	-	-
-	-	-	-
-	-	-	-

THE INFORMATION, INCLUDING ESTIMATED QUANTITIES OF WORK, SHOWN ON THESE SHEETS IS BASED ON LIMITED INVESTIGATIONS BY THE STATE AND IS IN NO WAY WARRANTED TO INDICATE THE CONDITIONS OF ACTUAL QUANTITIES OF WORK WHICH WILL BE REQUIRED.

Plotted Date: 8/19/2014

DESIGNER/DRAFTER: **D. CHERBELEATA**

CHECKED BY: **D. NEWMAN**

SCALE: 1" = 10'-0"

STATE OF CONNECTICUT
DEPARTMENT OF TRANSPORTATION

Filename: ...\FA_CGR_CPS_0170-2296_063_ 05_FCI_ 101

SIGNATURE/ BLOCK:

Hatch Mott MacDonald
Suite 100, North Lobby
400 Blue Hill Drive
Westwood, MA 02090

PROJECT TITLE:

NEW HAVEN - HARTFORD SPRINGFIELD RAIL CORRIDOR

TOWN: **HARTFORD**

DRAWING TITLE: **COMM. SYSTEMS PLAN**

PROJECT NO. **170-3261**

DRAWING NO. **FCI-101**

SHEET NO. **13.019**

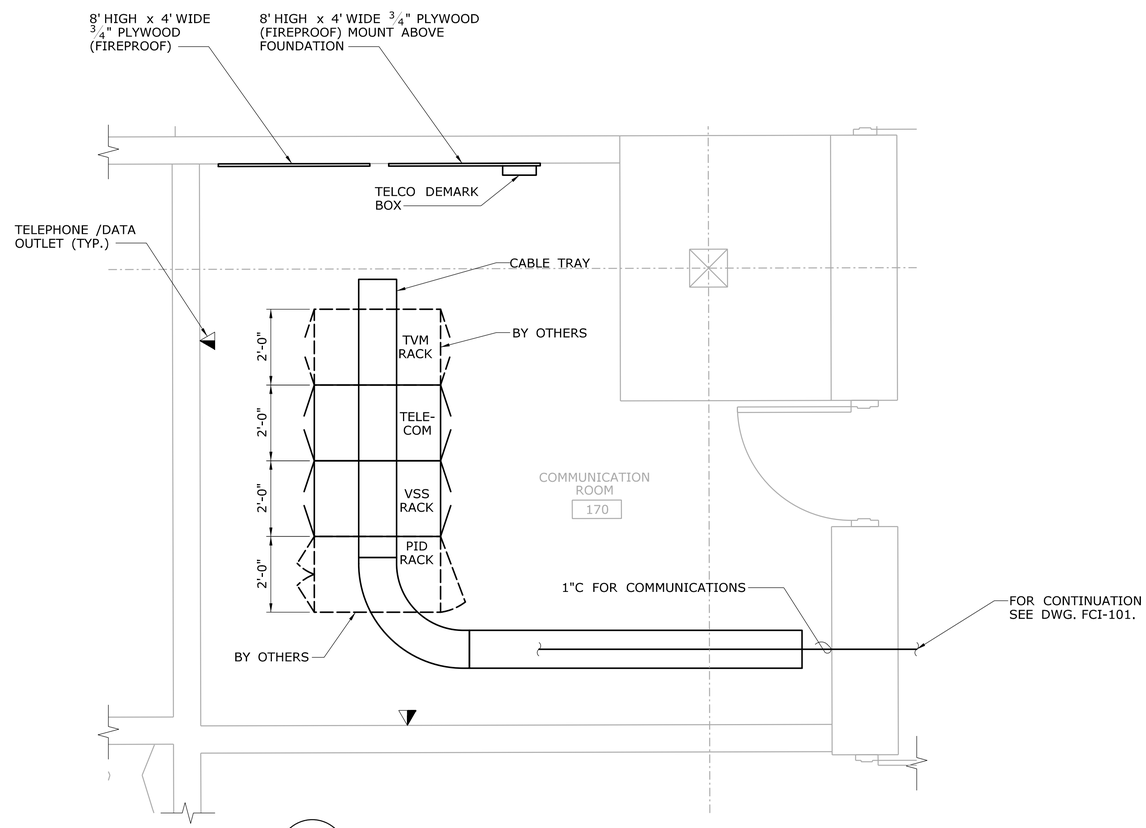

A
FCI-101

PARTIAL PLAN - COMMUNICATION ROOM

SCALE: 1/2" = 1'-0"

REV.	DATE	REVISION DESCRIPTION	SHEET NO.
-	-	-	-
-	-	-	-
-	-	-	-
-	-	-	-
-	-	-	-
-	-	-	-

THE INFORMATION, INCLUDING ESTIMATED QUANTITIES OF WORK, SHOWN ON THESE SHEETS IS BASED ON LIMITED INVESTIGATIONS BY THE STATE AND IS IN NO WAY WARRANTED TO INDICATE THE CONDITIONS OF ACTUAL QUANTITIES OF WORK WHICH WILL BE REQUIRED.

Plotted Date: 8/19/2014

DESIGNER/DRAFTER: **D. CHERBELEATA**

CHECKED BY: **D. NEWMAN**

SCALE: 1/2" = 1'-0"

STATE OF CONNECTICUT
DEPARTMENT OF TRANSPORTATION

Filename: ...\FA_CGR_CPS_0170-2296_063__05_FCI__102.dgn

SIGNATURE/ BLOCK:

STATE OF CONNECTICUT · HOWARD S. GRAMBLIN · LICENSED PROFESSIONAL ENGINEER

Hatch Mott MacDonald
Suite 100, North Lobby
400 Blue Hill Drive
Westwood, MA 02090

PROJECT TITLE:

NEW HAVEN - HARTFORD SPRINGFIELD RAIL CORRIDOR

TOWN: **HARTFORD**

DRAWING TITLE: **PARTIAL PLAN COMM. ROOM**

PROJECT NO. **170-3261**

DRAWING NO. **FCI-102**

SHEET NO. **13.020**

NOTES:

1. FIELD VERIFY CONDUIT ROUTING. RUN CONDUIT TIGHT TO STRUCTURE USING CONDUIT BEAM CLAMP.

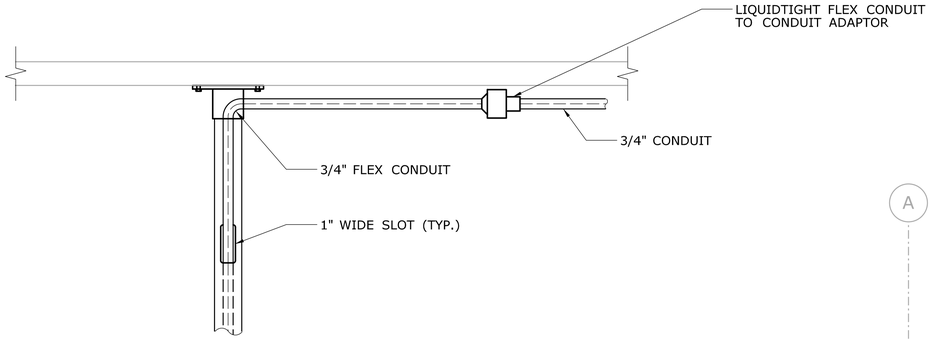

DETAIL 1
SCALE: 1-½" = 1'-0"

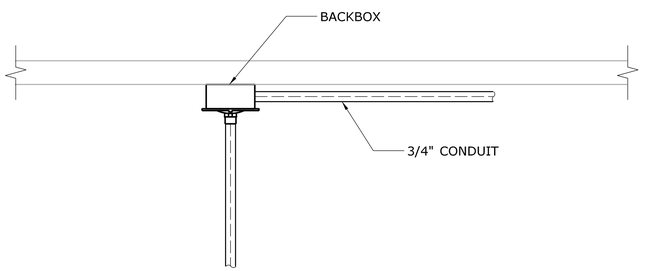

DETAIL 2
SCALE: 1-½" = 1'-0"

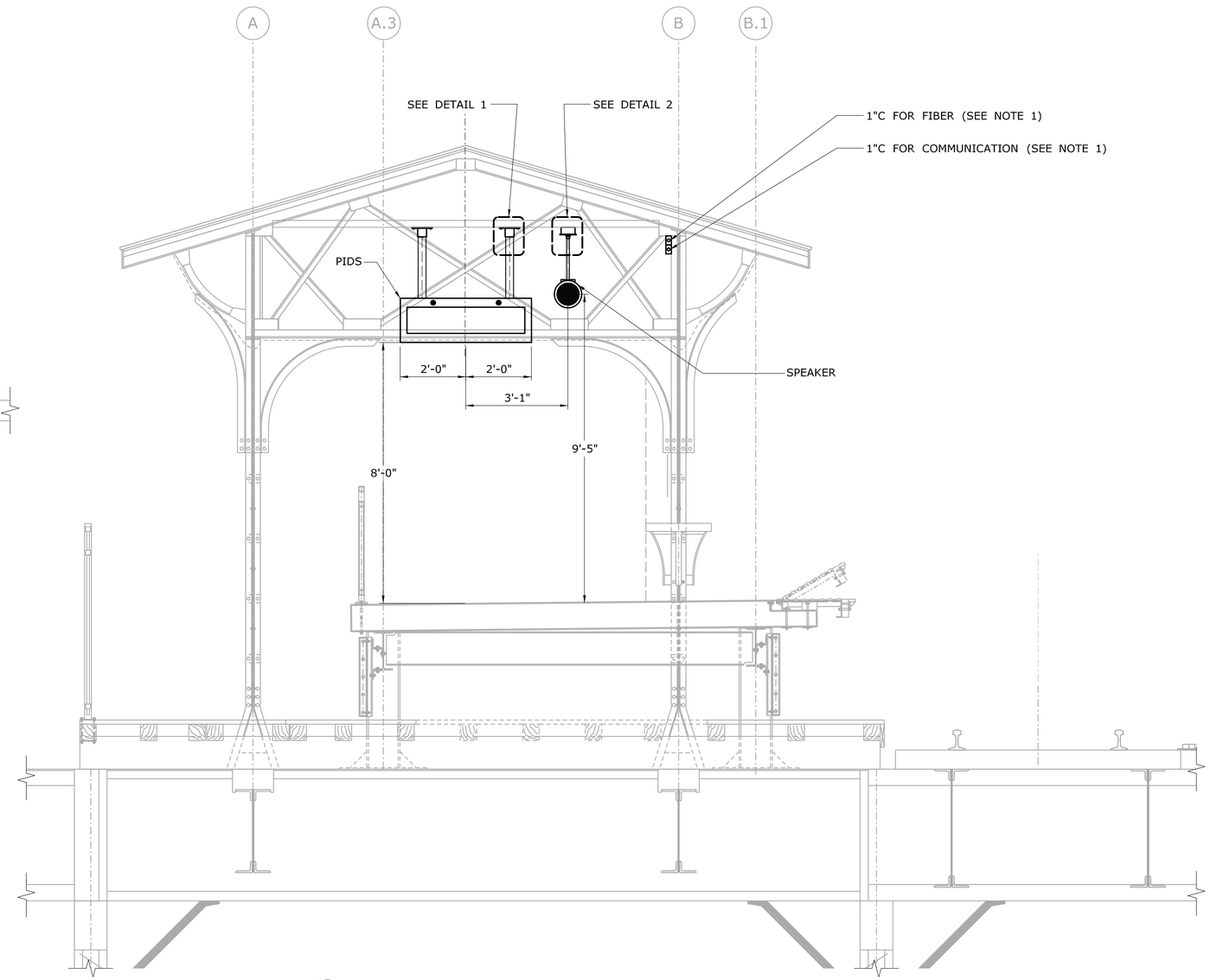

1 / FCI-101 **COMMUNICATION EQUIPMENT MOUNTING SECTION**
SCALE: ½" = 1'-0"

REV.	DATE	REVISION DESCRIPTION	SHEET NO.
-	-	-	-
-	-	-	-
-	-	-	-
-	-	-	-
-	-	-	-
-	-	-	-

THE INFORMATION, INCLUDING ESTIMATED QUANTITIES OF WORK, SHOWN ON THESE SHEETS IS BASED ON LIMITED INVESTIGATIONS BY THE STATE AND IS IN NO WAY WARRANTED TO INDICATE THE CONDITIONS OF ACTUAL QUANTITIES OF WORK WHICH WILL BE REQUIRED.

Plotted Date: 8/18/2014

DESIGNER/DRAFTER: **D. CHERBELEATA**
CHECKED BY: **D. NEWMAN**
SCALE AS NOTED

STATE OF CONNECTICUT
DEPARTMENT OF TRANSPORTATION

Filename: ...\FA_CGR_CPS_0170-2296_063_ _05_FCI_ _601.dgn

SIGNATURE/ BLOCK:
STATE OF CONNECTICUT · RODNEY K. GRANTHAM · LICENSED PROFESSIONAL ENGINEER
Hatch Mott MacDonald
Suite 100, North Lobby
400 Blue Hill Drive
Westwood, MA 02090

PROJECT TITLE:
NEW HAVEN - HARTFORD SPRINGFIELD RAIL CORRIDOR

TOWN: **HARTFORD**

DRAWING TITLE: **COMM. SYSTEMS DETAILS**

PROJECT NO. **170-3261**
DRAWING NO. **FCI-601**
SHEET NO. **13.021**

NOTES:

1. SEE DWG. FCI-101 FOR EQUIPMENT LOCATIONS.
2. REFER TO ARCHTECTURAL FOR TVM AND BLUE LIGHT LOCATIONS.

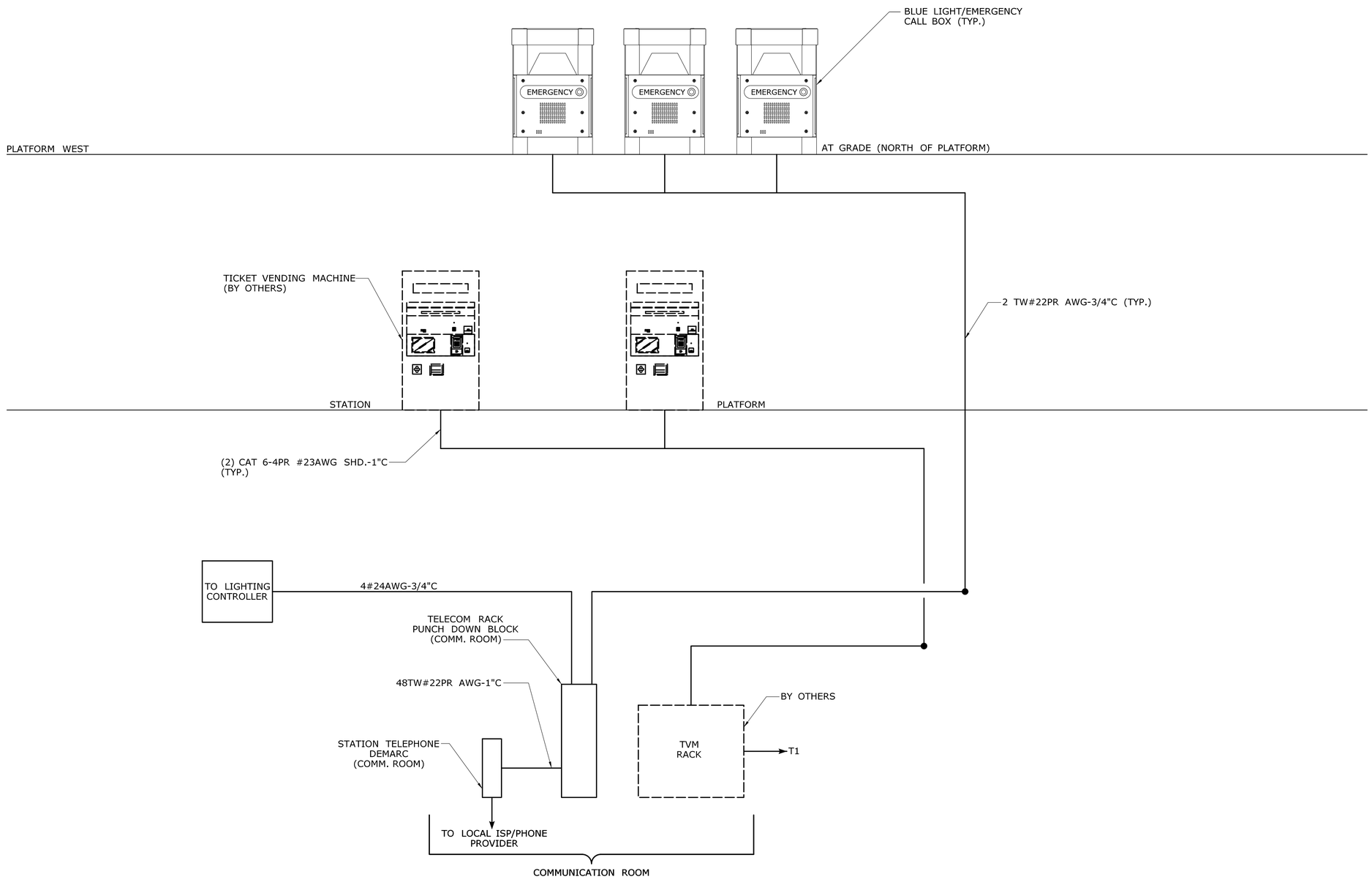

EMERGENCY TELEPHONE/BLUE LIGHT RISER DIAGRAM

NOT TO SCALE

REV.	DATE	REVISION DESCRIPTION	SHEET NO.
-	-	-	-
-	-	-	-
-	-	-	-
-	-	-	-
-	-	-	-
-	-	-	-

THE INFORMATION, INCLUDING ESTIMATED QUANTITIES OF WORK, SHOWN ON THESE SHEETS IS BASED ON LIMITED INVESTIGATIONS BY THE STATE AND IS IN NO WAY WARRANTED TO INDICATE THE CONDITIONS OF ACTUAL QUANTITIES OF WORK WHICH WILL BE REQUIRED.

Plotted Date: 8/18/2014

DESIGNER/DRAFTER: **D. CHERBELEATA**
CHECKED BY: **D. NEWMAN**

NOT TO SCALE

STATE OF CONNECTICUT
DEPARTMENT OF TRANSPORTATION

Filename: ...\FA_CGR_CPS_0170-2296_063_05_FCI_701.dgn

SIGNATURE/BLOCK:

Hatch Mott MacDonald
Suite 100, North Lobby
400 Blue Hill Drive
Westwood, MA 02090

PROJECT TITLE:
NEW HAVEN-HARTFORD SPRINGFIELD RAIL CORRIDOR

TOWN: **HARTFORD**

DRAWING TITLE:
COMM. SYS.-BL LIGHT, TVM & EMER. TEL. RISER DIAG.

PROJECT NO. **170-3261**
DRAWING NO. **FCI-701**
SHEET NO. **13.022**

NOTES:

1. REFER TO DWG. FCI-101 FOR EQUIPMENT LOCATIONS.
2. REFER TO FCI-001 FOR SIGN TYPE INFORMATION.
3. CONDUIT IS EXISTING. FIBER IS BY OTHERS.

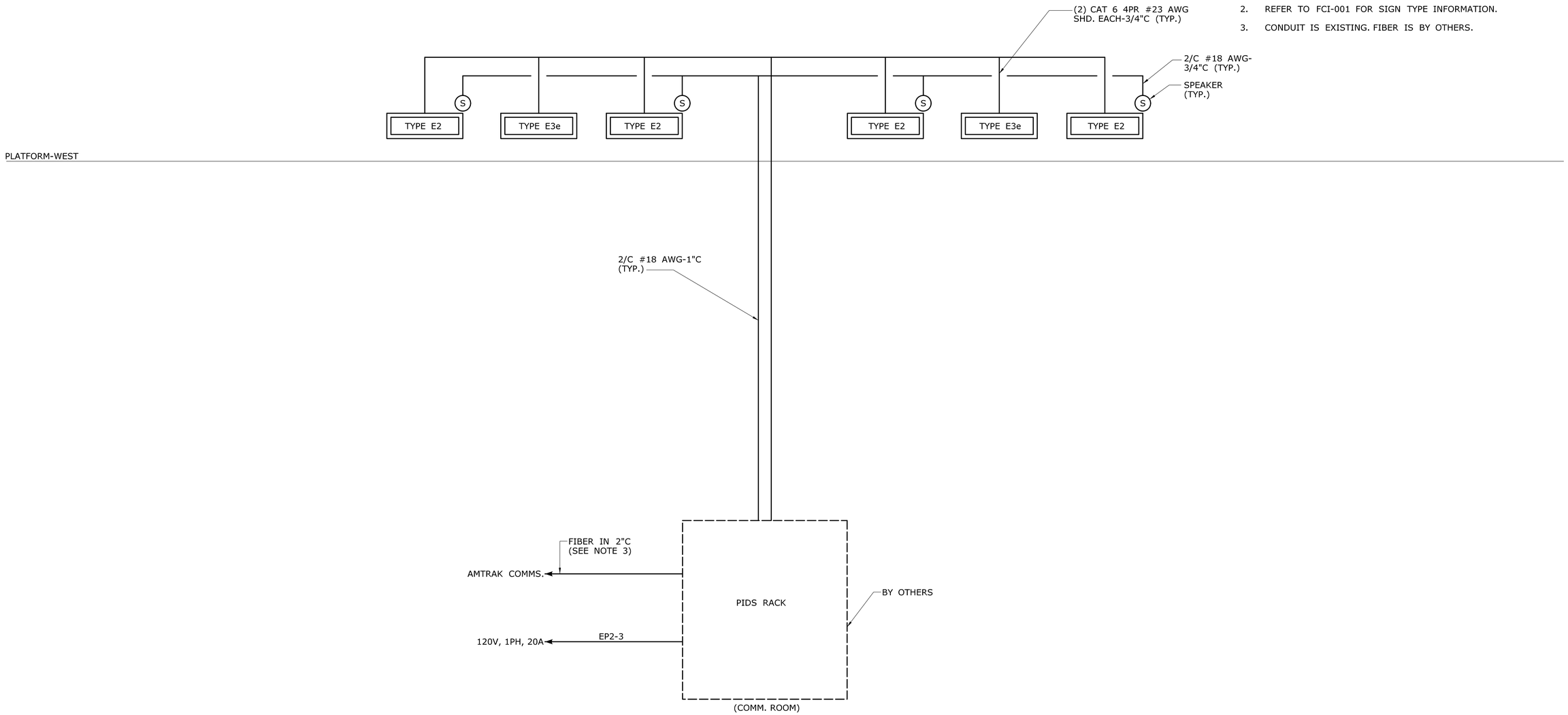

PIDS RISER DIAGRAM

NOT TO SCALE

REV.	DATE	REVISION DESCRIPTION	SHEET NO.
-	-	-	-
-	-	-	-
-	-	-	-
-	-	-	-
-	-	-	-
-	-	-	-

THE INFORMATION, INCLUDING ESTIMATED QUANTITIES OF WORK, SHOWN ON THESE SHEETS IS BASED ON LIMITED INVESTIGATIONS BY THE STATE AND IS IN NO WAY WARRANTED TO INDICATE THE CONDITIONS OF ACTUAL QUANTITIES OF WORK WHICH WILL BE REQUIRED.

Plotted Date: 8/18/2014

DESIGNER/DRAFTER: **D. CHERBELEATA**

CHECKED BY: **D. NEWMAN**

NOT TO SCALE

STATE OF CONNECTICUT
DEPARTMENT OF TRANSPORTATION

Filename: ...\FA_CGR_CPS_0170-2296_063__05_FCI__702.dgn

SIGNATURE/ BLOCK:

Hatch Mott MacDonald
Suite 100, North Lobby
400 Blue Hill Drive
Westwood, MA 02090

PROJECT TITLE:

NEW HAVEN - HARTFORD SPRINGFIELD RAIL CORRIDOR

TOWN: **HARTFORD**

DRAWING TITLE: **COMM. SYSTEMS PA/PIDS RISER DIAGRAM**

PROJECT NO. **170-3261**

DRAWING NO. **FCI-702**

SHEET NO. **13.023**

SECURITY LEGEND:

CAMERA

INFRARED CAMERA

CAMERA SCHEDULE

CAMERA TYPE	ENCLOSURE TYPE	MOUNT TYPE	LENS TYPE	POWER SUPPLY	F/O CONNECTION	WIRE REQUIRED
C1	OUTDOOR WP/VANDAL RESISTANT WITH HEATER	PENDANT	3MP-2.8-12mm f1.4	EXTERNAL	EXTERNAL	-
C2	IR OUTDOOR WP/VANDAL RESISTANT WITH HEATER	PENDANT	3MP-2.8-12mm f1.4	EXTERNAL	EXTERNAL	-

NOTES:

1. ALL EQUIPMENT AND CONNECTIONS SHALL BE FURNISHED AND INSTALLED BY THE CONTRACTOR.
2. SEE DWG. FAS-101 FOR CAMERA LOCATIONS.
3. ALL EQUIPMENT SHALL BE LATEST TECHNOLOGY WITH COMMERCIAL OFF THE SHELF AVAILABILITY PER AMTRAK STANDARDS.
4. THE CONTRACTOR SHALL INSURE CAMERA LOCATIONS ARE NOT OBSTRUCTED.
5. CONTRACTOR SHALL PROVIDE OPTIMIZED CAMERA VIEWING ANGLE AND FIELD OF VIEW BASED ON SELECTED CAMERA SPECIFICATIONS.

ABBREVIATIONS:

TVM TICKET VENDING MACHINE

VSS VIDEO SURVEILLANCE SYSTEM

PIDS PASSENGER INFORMATION DISPLAY SYSTEM

REV.	DATE	REVISION DESCRIPTION	SHEET NO.
-	-	-	-
-	-	-	-
-	-	-	-
-	-	-	-
-	-	-	-
-	-	-	-

THE INFORMATION, INCLUDING ESTIMATED QUANTITIES OF WORK, SHOWN ON THESE SHEETS IS BASED ON LIMITED INVESTIGATIONS BY THE STATE AND IS IN NO WAY WARRANTED TO INDICATE THE CONDITIONS OF ACTUAL QUANTITIES OF WORK WHICH WILL BE REQUIRED.

Plotted Date: 8/18/2014

DESIGNER/DRAFTER: D. CHERBELEATA

CHECKED BY: D. NEWMAN

NOT TO SCALE

STATE OF CONNECTICUT
DEPARTMENT OF TRANSPORTATION

Filename: ...\FA_CGR_CPS_0170-2296_063_05_FAS_001.dgn

SIGNATURE/ BLOCK:

Hatch Mott MacDonald
Suite 100, North Lobby
400 Blue Hill Drive
Westwood, MA 02090

PROJECT TITLE: NEW HAVEN - HARTFORD SPRINGFIELD RAIL CORRIDOR

TOWN: HARTFORD

DRAWING TITLE: SEC. SYSYEMS-GEN. NOTES, LEGEND & ABBREV.

PROJECT NO. 170-3261

DRAWING NO. FAS-001

SHEET NO. 13.024

NOTES:

1. REFER TO LEGEND SYMBOLS ON DWG. FAS-001.
2. PROVIDE TWO FIXED CAMERAS WITHIN ONE ENCLOSURE VIEWING OPPOSITE DIRECTIONS.

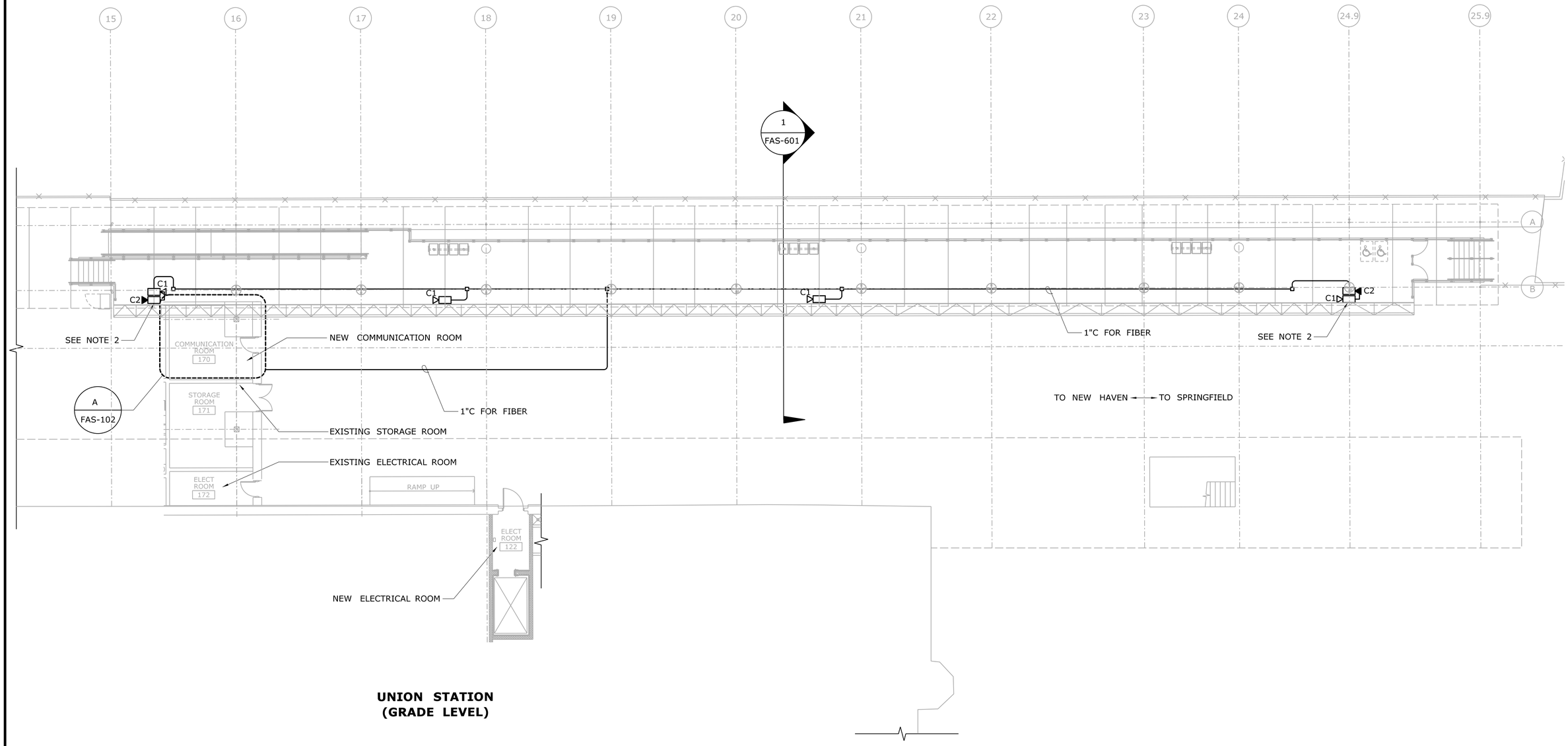

UNION STATION
(GRADE LEVEL)

SECURITY PLAN
SCALE: 1" = 10'-0"

REV.	DATE	REVISION DESCRIPTION	SHEET NO.
-	-	-	-
-	-	-	-
-	-	-	-
-	-	-	-
-	-	-	-
-	-	-	-

THE INFORMATION, INCLUDING ESTIMATED QUANTITIES OF WORK, SHOWN ON THESE SHEETS IS BASED ON LIMITED INVESTIGATIONS BY THE STATE AND IS IN NO WAY WARRANTED TO INDICATE THE CONDITIONS OF ACTUAL QUANTITIES OF WORK WHICH WILL BE REQUIRED.

Plotted Date: 8/19/2014

DESIGNER/DRAFTER: **D. CHERBELEATA**
CHECKED BY: **D. NEWMAN**
SCALE: 1" = 10'-0"

STATE OF CONNECTICUT
DEPARTMENT OF TRANSPORTATION

Filename: ...\FA..CGR..CPS..0170-2296..063...05..FAS...101

SIGNATURE/ BLOCK:
APPROVED

Hatch Mott MacDonald
Suite 100, North Lobby
400 Blue Hill Drive
Westwood, MA 02090

PROJECT TITLE:
NEW HAVEN - HARTFORD SPRINGFIELD RAIL CORRIDOR

TOWN: **HARTFORD**

DRAWING TITLE:
SECURITY SYSTEMS PLATFORM PLAN

PROJECT NO. **170-3261**
DRAWING NO. **FAS-101**
SHEET NO. **13.025**

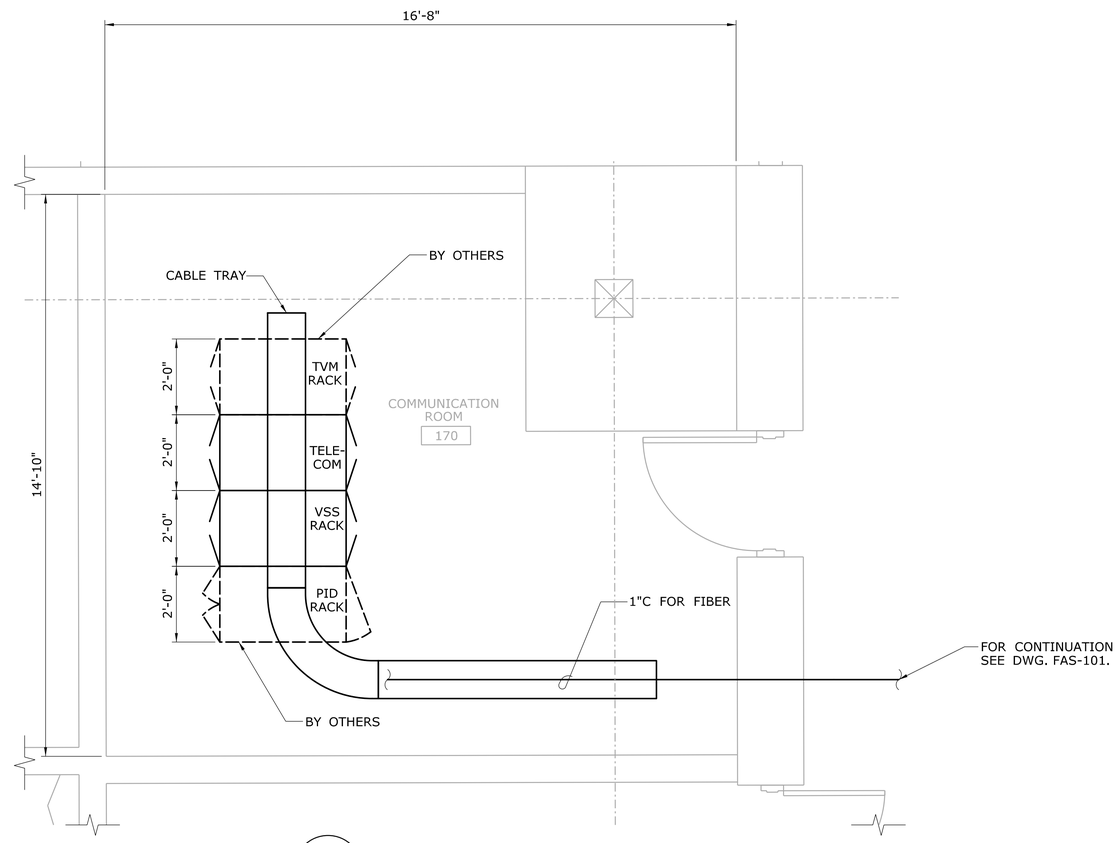

A
FAS-101

PARTIAL PLAN
SCALE: 1/2" = 1'-0"

REV.	DATE	REVISION DESCRIPTION	SHEET NO.
-	-	-	-
-	-	-	-
-	-	-	-
-	-	-	-
-	-	-	-
-	-	-	-

THE INFORMATION, INCLUDING ESTIMATED QUANTITIES OF WORK, SHOWN ON THESE SHEETS IS BASED ON LIMITED INVESTIGATIONS BY THE STATE AND IS IN NO WAY WARRANTED TO INDICATE THE CONDITIONS OF ACTUAL QUANTITIES OF WORK WHICH WILL BE REQUIRED.

Plotted Date: 8/19/2014

DESIGNER/DRAFTER: **D. CHERBELEATA**
CHECKED BY: **D. NEWMAN**
SCALE: 1/2" = 1'-0"

STATE OF CONNECTICUT
DEPARTMENT OF TRANSPORTATION

Filename: ...\FA_CGR_CPS_0170-2296_063_05_FAS_102.dgn

SIGNATURE/BLOCK:
STATE OF CONNECTICUT · JOHN A. CHARTIER · LICENSED PROFESSIONAL ENGINEER
Hatch Mott MacDonald
Suite 100, North Lobby
400 Blue Hill Drive
Westwood, MA 02090

PROJECT TITLE:
NEW HAVEN - HARTFORD SPRINGFIELD RAIL CORRIDOR

TOWN: **HARTFORD**

DRAWING TITLE: **SECURITY SYSTEMS PARTIAL PLAN**

PROJECT NO. **170-3261**
DRAWING NO. **FAS-102**
SHEET NO. **13.026**

NOTES:

1. FIELD VERIFY CONDUIT ROUTING. RUN CONDUIT TIGHT TO STRUCTURE USING CONDUIT BEAM CLAMP.

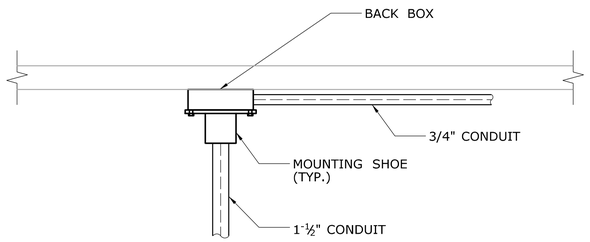

DETAIL 1

SCALE: 1-½" = 1'-0"

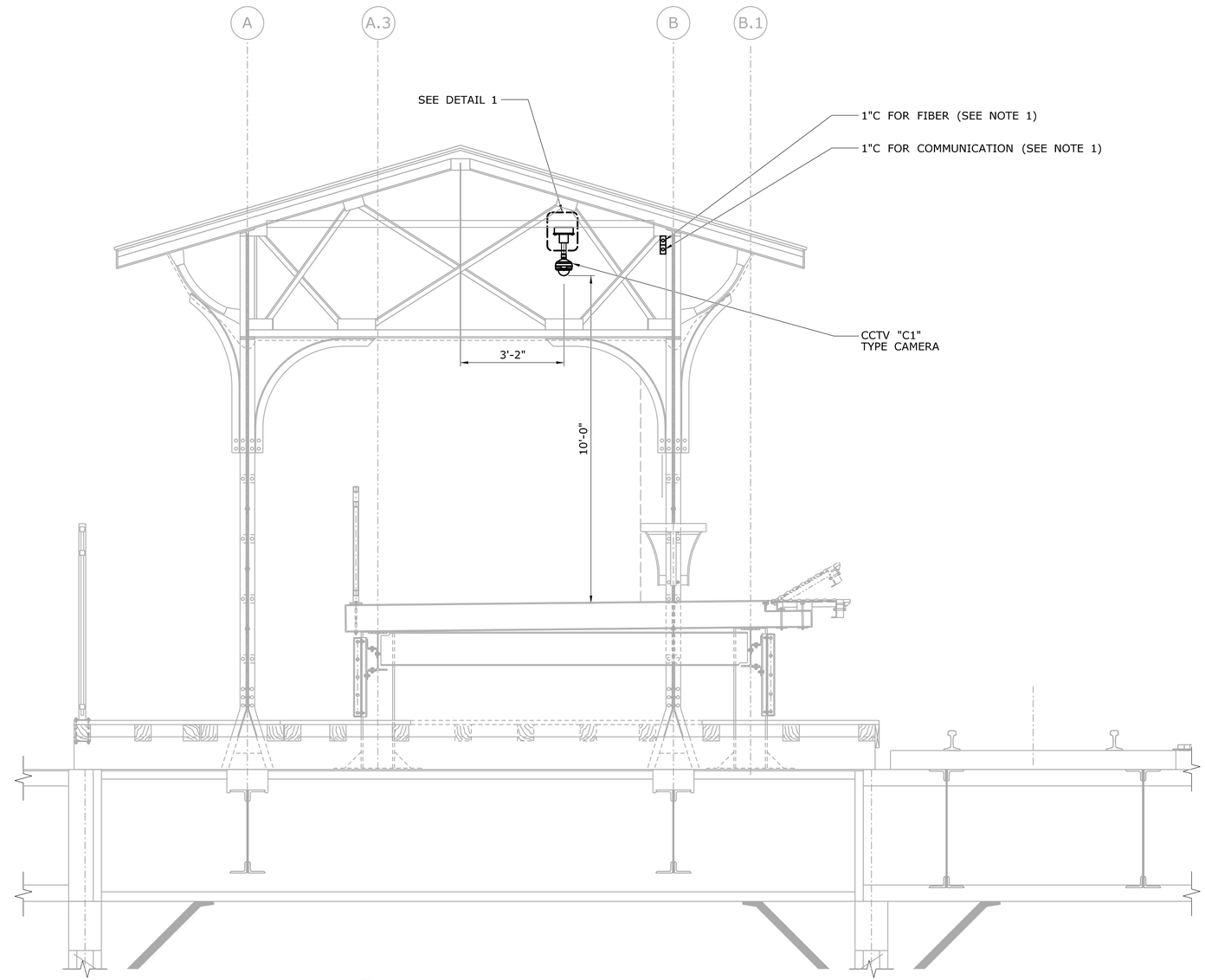

1 / FAS-101 **PENDANT MOUNTED CAMERA SECTION**

SCALE: ½" = 1'-0"

REV.	DATE	REVISION DESCRIPTION	SHEET NO.
-	-	-	-
-	-	-	-
-	-	-	-
-	-	-	-
-	-	-	-
-	-	-	-

THE INFORMATION, INCLUDING ESTIMATED QUANTITIES OF WORK, SHOWN ON THESE SHEETS IS BASED ON LIMITED INVESTIGATIONS BY THE STATE AND IS IN NO WAY WARRANTED TO INDICATE THE CONDITIONS OF ACTUAL QUANTITIES OF WORK WHICH WILL BE REQUIRED.

Plotted Date: 8/18/2014

DESIGNER/DRAFTER: **D. CHERBELEATA**

CHECKED BY: **D. NEWMAN**

SCALE AS NOTED

STATE OF CONNECTICUT
DEPARTMENT OF TRANSPORTATION

Filename: ...\FA_CGR_CPS_0170-2296_063_05_FAS_601.dgn

SIGNATURE/ BLOCK:

STATE OF CONNECTICUT ROBIN K. GRAVELINE 25 LICENSED PROFESSIONAL ENGINEER

Hatch Mott MacDonald
Suite 100, North Lobby
400 Blue Hill Drive
Westwood, MA 02090

PROJECT TITLE: **NEW HAVEN - HARTFORD SPRINGFIELD RAIL CORRIDOR**

TOWN: **HARTFORD**

DRAWING TITLE: **SECURITY SYSTEMS DETAILS**

PROJECT NO. **170-3261**

DRAWING NO. **FAS-601**

SHEET NO. **13.027**

NOTES:

1. SEE DRAWING FAS-001 FOR LEGEND, NOTES AND SCHEDULE.

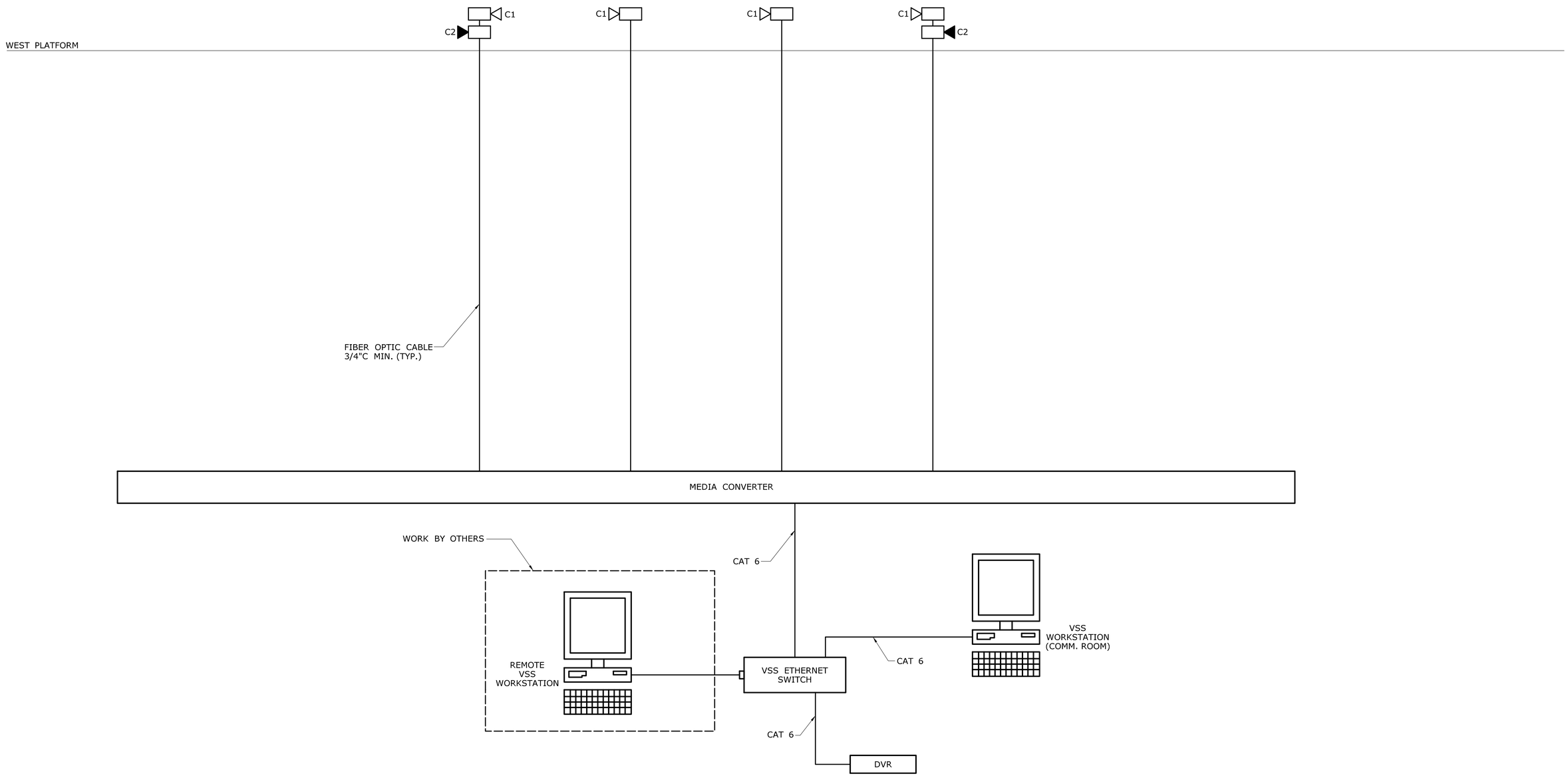

SECURITY SYSTEMS NETWORK DIAGRAM

NOT TO SCALE

REV.	DATE	REVISION DESCRIPTION	SHEET NO.
-	-	-	-
-	-	-	-
-	-	-	-
-	-	-	-
-	-	-	-
-	-	-	-

THE INFORMATION, INCLUDING ESTIMATED QUANTITIES OF WORK, SHOWN ON THESE SHEETS IS BASED ON LIMITED INVESTIGATIONS BY THE STATE AND IS IN NO WAY WARRANTED TO INDICATE THE CONDITIONS OF ACTUAL QUANTITIES OF WORK WHICH WILL BE REQUIRED.

Plotted Date: 8/18/2014

DESIGNER/DRAFTER: **D. CHERBELEATA**

CHECKED BY: **D. NEWMAN**

NOT TO SCALE

STATE OF CONNECTICUT
DEPARTMENT OF TRANSPORTATION

Filename: ...\FA..CGR..CPS..0170-2296..063...05..FAS...701.dgn

SIGNATURE/ BLOCK:

Hatch Mott MacDonald
Suite 100, North Lobby
400 Blue Hill Drive
Westwood, MA 02090

PROJECT TITLE: **NEW HAVEN - HARTFORD SPRINGFIELD RAIL CORRIDOR**

TOWN: **HARTFORD**

DRAWING TITLE: **SECURITY SYSTEMS RISER DIAGRAM**

PROJECT NO. **170-3261**

DRAWING NO. **FAS-701**

SHEET NO. **13.028**

FIRE ALARM LEGEND:

- FACP — FIRE ALARM CONTROL PANEL
- F — FIRE ALARM MANUAL PULL STATION
- AV — AUDIO VISUAL DEVICE
- S — FIRE ALARM SMOKE DETECTOR
- END OF LINE RESISTOR (EOL)
- R WP — REMOTE ALARM INDICATOR WITH TEST SWITCH (WEATHER-PROOF)

NOTES:

1. ALL WIRING SHALL BE PER FIRE ALARM MANUFACTURERS RECOMMENDATIONS.
2. ALL STROBES SHALL BE RATED AT 75 CANDELAS.
3. ALL MANUAL PULL STATIONS LOCATED IN PUBLIC AREAS SHALL HAVE A PLEXIGLASS COVER INSTALLED OVER IT.
4. FIRE ALARM MANUFACTURER SHALL PROVIDE ALL END OF LINE RESISTOR VALUES AND SHALL DESIGNATE THE LOCATION IN THE CIRCUIT.
5. FIRE ALARM RISER SHOWN FOR DIAGRAMMATIC PURPOSES ONLY. ACTUAL DEVICE QUANTITIES AND WIRING REQUIREMENTS SHALL BE PER CONTRACT DOCUMENTS AND FIRE ALARM MANUFACTURER.
6. ALL NEW DEVICES TO BE ADDED TO THE EXISTING FIRE ALARM SYSTEM. FIRE ALARM PANEL LOCATED IN THE SECURITY ROOM (STATION LOWER LEVEL).

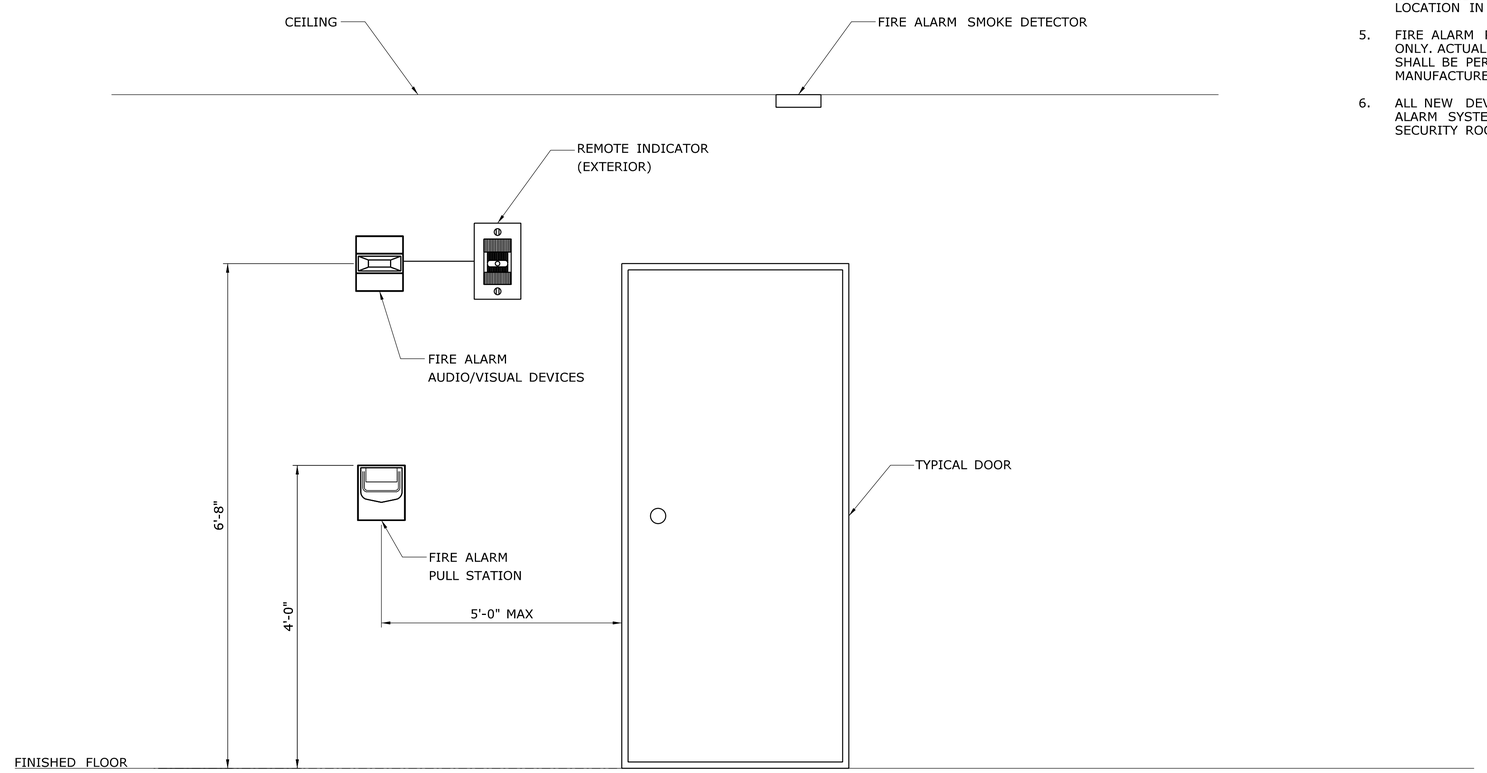

DEVICE MOUNTING DETAILS

NOT TO SCALE

REV.	DATE	REVISION DESCRIPTION	SHEET NO.
-	-	-	-
-	-	-	-
-	-	-	-
-	-	-	-
-	-	-	-
-	-	-	-

THE INFORMATION, INCLUDING ESTIMATED QUANTITIES OF WORK, SHOWN ON THESE SHEETS IS BASED ON LIMITED INVESTIGATIONS BY THE STATE AND IS IN NO WAY WARRANTED TO INDICATE THE CONDITIONS OF ACTUAL QUANTITIES OF WORK WHICH WILL BE REQUIRED.

Plotted Date: 8/18/2014

DESIGNER/DRAFTER: D. CHERBELEATA
CHECKED BY: D. NEWMAN
NOT TO SCALE

STATE OF CONNECTICUT
DEPARTMENT OF TRANSPORTATION

Filename: ...\FA_CGR_CPS_0170-2296_063_05_FFD_001.dgn

SIGNATURE/BLOCK:
Hatch Mott MacDonald
Suite 100, North Lobby
400 Blue Hill Drive
Westwood, MA 02090

PROJECT TITLE: NEW HAVEN-HARTFORD SPRINGFIELD RAIL CORRIDOR

TOWN: HARTFORD

DRAWING TITLE: FIRE ALARM GEN. NOTES & LEGEND

PROJECT NO. 170-3261
DRAWING NO. FFD-001
SHEET NO. 13.029

NOTES:

1. EXISTING FIRE ALARM DEVICES AND ASSOCIATED CABLE AND CONDUIT WITHIN NEW ELECTRICAL AND COMMUNICATION ROOMS SHALL DEMOLISHED BACK TO EXISTING FACP.
2. NEW DEVICES SHALL BE WIRED TO EXISTING FACP. ALL WORK ASSOCIATED WITH THE FURNISHING INSTALLATION AND TESTING OF THE NEW DEVICES IS WORK OF THIS CONTRACT.

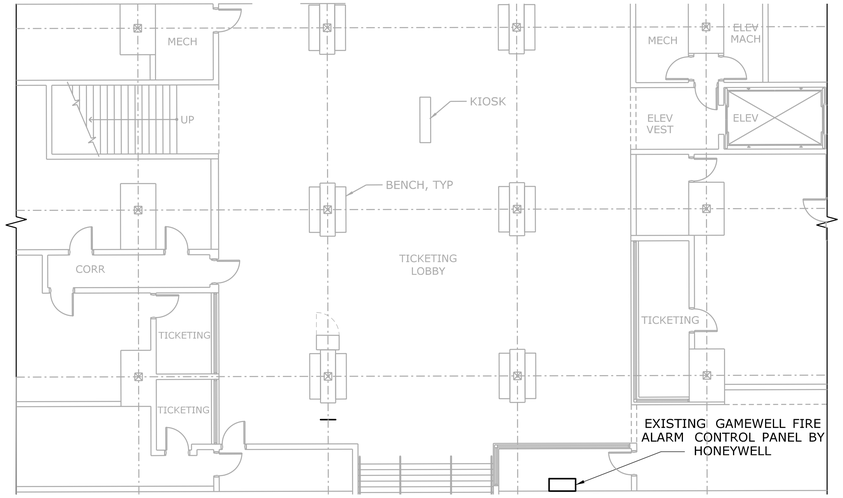

STATION TICKETING GRADE LEVEL - PARTIAL PLAN

SCALE: 1" = 10'-0"

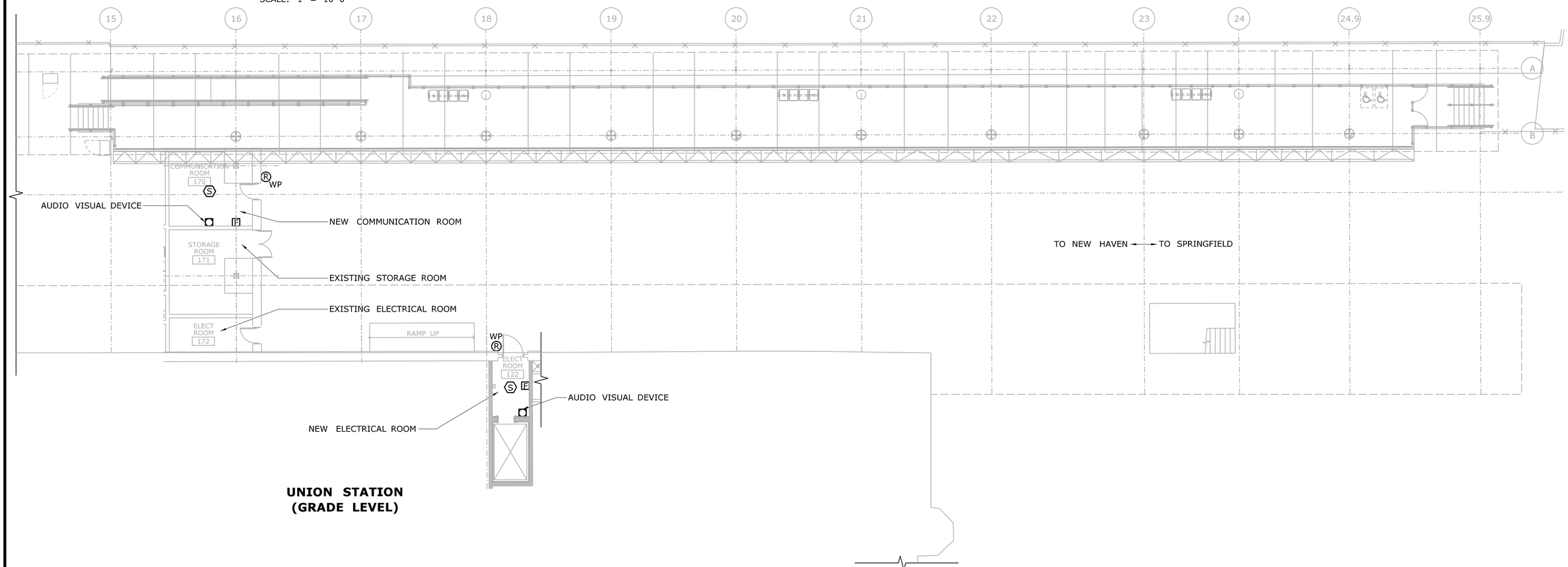

UNION STATION (GRADE LEVEL)

FIRE ALARM PLAN

SCALE: 1" = 10'-0"

REV.	DATE	REVISION DESCRIPTION	SHEET NO.
-	-	-	-
-	-	-	-
-	-	-	-
-	-	-	-
-	-	-	-
-	-	-	-

THE INFORMATION, INCLUDING ESTIMATED QUANTITIES OF WORK, SHOWN ON THESE SHEETS IS BASED ON LIMITED INVESTIGATIONS BY THE STATE AND IS IN NO WAY WARRANTED TO INDICATE THE CONDITIONS OF ACTUAL QUANTITIES OF WORK WHICH WILL BE REQUIRED.

Plotted Date: 8/19/2014

DESIGNER/DRAFTER: **D. CHERBELEATA**

CHECKED BY: **D. NEWMAN**

SCALE: 1" = 10'-0"

STATE OF CONNECTICUT
DEPARTMENT OF TRANSPORTATION

Filename: ...\FA_CGR_CPS_0170-2296_063_05_FFD_101.dgn

SIGNATURE/ BLOCK:

Hatch Mott MacDonald
Suite 100, North Lobby
400 Blue Hill Drive
Westwood, MA 02090

PROJECT TITLE:

NEW HAVEN - HARTFORD SPRINGFIELD RAIL CORRIDOR

TOWN: **HARTFORD**

DRAWING TITLE: **FIRE ALARM PLAN - GRADE LEVEL**

PROJECT NO. **170-3261**

DRAWING NO. **FFD-101**

SHEET NO. **13.030**

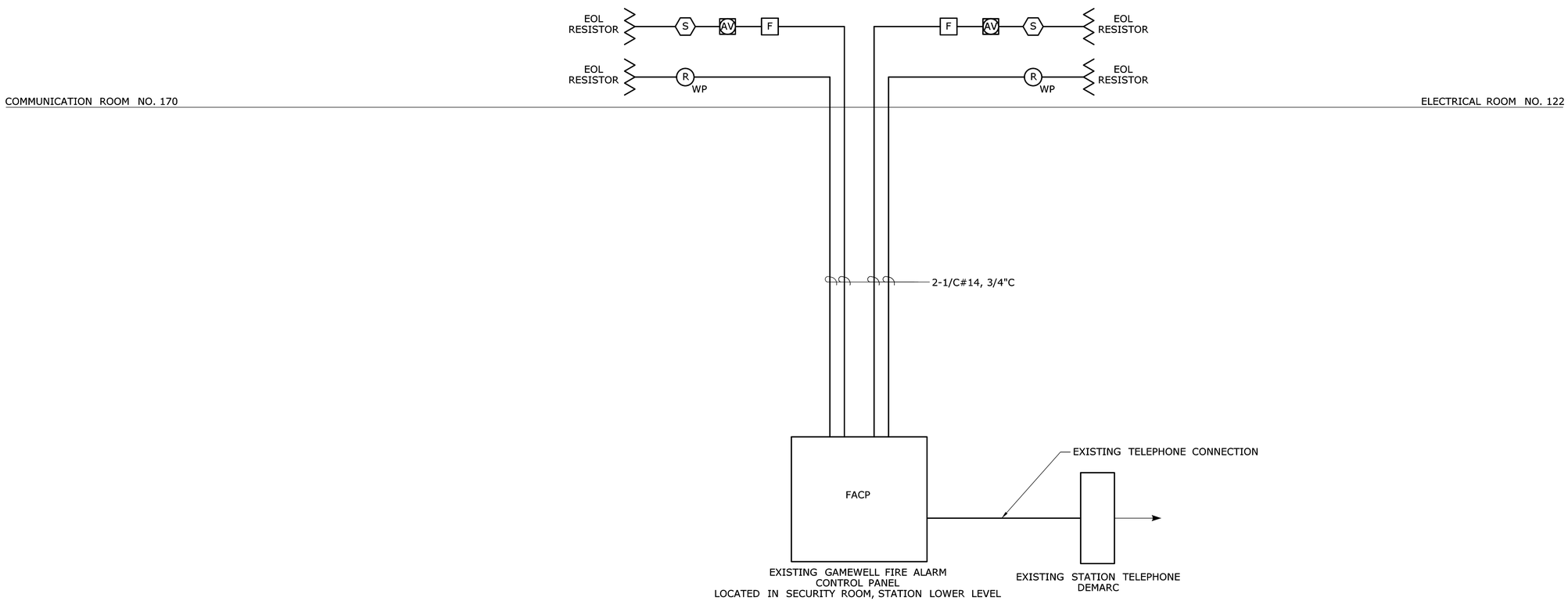

FIRE ALARM RISER DIAGRAM

NOT TO SCALE

REV.	DATE	REVISION DESCRIPTION	SHEET NO.
-	-	-	-
-	-	-	-
-	-	-	-
-	-	-	-
-	-	-	-
-	-	-	-

THE INFORMATION, INCLUDING ESTIMATED QUANTITIES OF WORK, SHOWN ON THESE SHEETS IS BASED ON LIMITED INVESTIGATIONS BY THE STATE AND IS IN NO WAY WARRANTED TO INDICATE THE CONDITIONS OF ACTUAL QUANTITIES OF WORK WHICH WILL BE REQUIRED.

Plotted Date: 8/18/2014

DESIGNER/DRAFTER: **D. CHERBELEATA**
CHECKED BY: **D. NEWMAN**

NOT TO SCALE

STATE OF CONNECTICUT
DEPARTMENT OF TRANSPORTATION

Filename: ...\FA_CGR_CPS_0170-2296_063_05_FFD_701.dgn

SIGNATURE/ BLOCK:

Hatch Mott MacDonald
Suite 100, North Lobby
400 Blue Hill Drive
Westwood, MA 02090

PROJECT TITLE:
NEW HAVEN-HARTFORD SPRINGFIELD RAIL CORRIDOR

TOWN: **HARTFORD**

DRAWING TITLE: **FIRE ALARM RISER DIAGRAM**

PROJECT NO. **170-3261**
DRAWING NO. **FFD-701**
SHEET NO. **13.031**