11 - ARCHITECTURAL

INDEX OF DRAWINGS

DRAWING NUMBER	DRAWING TITLE
ARI-001	INDEX OF DRAWINGS
ARC-001	ABBREVIATIONS, SYMBOLS, & GENERAL NOTES
ARC-002	CODE COMPLIANCE PLAN
ARC-100	ARCHITECTURAL KEY PLAN
ARC-101	PLATFORM PLAN
ARC-102	ENLARGED PLANS
ARC-201	ELEVATIONS
ARC-301	PLATFORM SECTION 1
ARC-302	PLATFORM SECTION 2
ARC-501	EGRESS STAIR DETAILS - 1
ARC-502	EGRESS STAIR DETAILS - 2
ARC-503	GUARDRAIL DETAILS - 1
ARC-504	GUARDRAIL DETAILS - 2
ARC-505	HANDRAIL DETAILS
ARC-506	MISCELLANEOUS DETAILS
SIGNAGE PLANS	
SGN-001	SITE SIGN LOCATION PLAN
SGN-002	PLATFORM SIGN LOCATION PLAN
SGN-003	PLATFORM SIGN TYPES I
SGN-004	PLATFORM SIGN TYPES II
SGN-005	PLATFORM SIGN TYPES III
SGN-006	SIGN MOUNTING DETAILS I
SGN-007	SIGN MOUNTING DETAILS II
SGN-008	SIGN MOUNTING DETAILS III

DESIGNED BY:

Baker

MICHAEL BAKER ENGINEERING, INC.
500 ENTERPRISE DRIVE
SUITE 2B
ROCKY HILL, CT 06067

Scott Delesdernier
2014.08.20
17:04:34-04'00'

REV.	DATE	REVISION DESCRIPTION	SHEET NO.
-	-	-	-
-	-	-	-
-	-	-	-
-	-	-	-
-	-	-	-
-	-	-	-

THE INFORMATION, INCLUDING ESTIMATED QUANTITIES OF WORK, SHOWN ON THESE SHEETS IS BASED ON LIMITED INVESTIGATIONS BY THE STATE AND IS IN NO WAY WARRANTED TO INDICATE THE CONDITIONS OF ACTUAL QUANTITIES OF WORK WHICH WILL BE REQUIRED.

Plotted Date: 8/19/2014

DESIGNER/DRAFTER: **D. PEKAROVIC**

CHECKED BY: **A SARDILLI**

SCALE AS NOTED

STATE OF CONNECTICUT
DEPARTMENT OF TRANSPORTATION

Filename: ...\FA..CGR..CPS..0170-2296..063...05..ARI...001.dgn

SIGNATURE/BLOCK:

Baker
Michael Baker Engineering Inc.
500 Enterprise Drive
Suite 2B
Rocky Hill, CT 06067

PROJECT TITLE:

NEW HAVEN - HARTFORD SPRINGFIELD RAIL CORRIDOR

TOWN: **HARTFORD**

DRAWING TITLE: **INDEX OF DRAWINGS**

PROJECT NO. **170-3261**

DRAWING NO. **ARI-001**

SHEET NO. **11.01**

Connecticut Department of Transportation
QA/QC Format Check

ARCHITECTURAL ABBREVIATIONS

A.B.	ANCHOR BOLT
ACT	ACOUSTICAL
AFF	ABOVE FINISHED FLOOR
AGG	AGGREGATE
ALUM	ALUMINUM
APPROX	APPROXIMATE
ARCH	ARCHITECTURAL
AVG	AVERAGE
ASSY	ASSEMBLY
B/	BOTTOM OF
B.C.	BOTTOM OF CURB
B.L.	BUILDING LINE
BLDG	BUILDING
BLK	BLOCK
BLKG	BLOCKING
BM	BENCHMARK
BOT	BOTTOM
BRG	BEARING
BRKT	BRACKET
BR & S	BACKER ROD & SEALANT
BSMT	BASEMENT
C-C	CENTER TO CENTER
CAB	CABINET
CB	CATCH BASIN
CEM	CEMENT
C.F.B.	CERAMIC FACING BRICK
C.I.P.	CAST IN PLACE
C.J.	CONSTRUCTION JOINT
℄	CENTERLINE
CLG	CEILING
CLO	CLOSET
CLR	CLEAR
CMU	CONCRETE MASONRY UNIT
COL	COLUMN
CONC	CONCRETE
CONN	CONNECTION
CONST	CONSTRUCTION
CONT	CONTINUOUS
C.T.	CERAMIC TILE
CT. JT.	CONTROL JOINT
CTR	CENTER
CTSK	COUNTERSINK, COUNTERSUNK
DBLE	DOUBLE
DEMO	DEMOLITION
DEPT	DEPARTMENT
DF	DRINKING FOUNTAIN
DIA	DIAMETER
DIAG	DIAGONAL
DIM	DIMENSION
DL	DEAD LOAD
DN	DOWN
DO	DITTO
DR	DOOR
DS	DOWNSPOUT
DTL	DETAIL
DWG	DRAWING
EA	EACH
EL	ELEVATION
ELEC	ELECTRIC
ELEV	ELEVATOR
ENT	ENTRANCE
EQ	EQUAL
EQUIP	EQUIPMENT
ESC	ESCALATOR
EXH	EXHAUST
E. JT.	EXPANSION JOINT
EX	EXISTING
EXT	EXTERIOR
EXP	EXPANSION
F/	FACE OF
FD	FLOOR DRAIN
FDN	FOUNDATION
F.E.	FIRE EXTINGUISHER
FIN FL	FINISHED FLOOR
FIXT.	FIXTURE
FLSHG	FLASHING
FLUOR	FLOURESCENT
FP	FIRE PROTECTION
FRMG	FRAMING
FT	FOOT
FTG	FOOTING
F.O.M.	FACE OF MASONRY
F.O.S.	FACE OF STUD
FURN.	FURNISH
GA	GAUGE
GALV	GALVANIZED
G.B.	GRAB BAR
GL	GLASS
GR	GRADE
GR. BM.	GRADE BEAM
GYP. BD.	GYPSUM BOARD

H.B.	HOSE BIBB
HDW	HARDWARE
HDWD	HARDWOOD
HM	HOLLOW METAL
HORIZ	HORIZONTAL
HP	HIGH POINT
HR	HANDRAIL
HT	HEIGHT
HTR	HEATER
HYD	HYDRAULIC
H.S.	HEAT STRENGTHENED
HSS	HOLLOW STEEL SECTION
ID	INSIDE DIAMETER
I.E.	INVERTED ELEVATION
INCL	INCLUDING
(") IN	INCH
INSUL	INSULATE, INSULATION
INT	INTERIOR
J.C.	JANITOR'S CLOSET
JT	JOINT
K	KIP
K.O.	KNOCK OUT
KPL	KICKPLATE
L	ANGLE
LAM	LAMINATED
LB	POUNDS
L.H.	LEFT HAND
L.H.R.	LEFT HAND REVERSE
LL	LIVE LOAD
LLH	LONG LEG HORIZONTAL
LLV	LONG LEG VERTICAL
LP	LOW POINT
LT	LIGHT
LT. STD.	LIGHT STANDARD
MATL	MATERIAL
MAX	MAXIMUM
MBR	MEMBER
M.C.B.	METAL CORNER BEAD
MECH	MECHANICAL
MEMB	MEMBRANE
MEZZ	MEZZANINE
MFR	MANUFACTURER
MH	MANHOLE
MIN	MINIMUM
MISC	MISCELLANEOUS
MTD	MOUNTED
MTL	METAL
NEOP	NEOPRENE
NIC	NOT IN CONTRACT
NO. , #	NUMBER
NOM	NOMINAL
NRP	NON-REMOVABLE PIN
NTS	NOT TO SCALE
OA	OVERALL
O.C.	ON CENTER
O.D.	OUTSIDE DIAMETER
OFF.	OFFICE
O.H.	OVERHEAD
OPP. H.	OPPOSITE HAND
OPNG	OPENING
PASS.	PASSENGER
P.C.	PRECAST CONCRETE
PERF.	PERFORATED
PL	PLATE
P.L.	PROPERTY LINE
PLAS	PLASTER
PLWD	PLYWOOD
PNL	PANEL
PNT	PAINT
PREFAB	PREFABRICATED
P.S.F.	POUNDS PER SQ. FOOT
P.S.I.	POUNDS PER SQ. INCH
PT	POINT
P.T.	PRESSURE TREATED
PTD	PAINTED
PTN	PARTITION
PVC	POLYVINYL CHLORIDE
PVMT	PAVEMENT
PWR	POWER
QTY	QUANTITY

R	RADIUS
R.D.	ROOF DRAIN
REBAR	REINFORCING BAR
REF	REFERENCE
REINF	REINFORCED
REQD	REQUIRED
REV	REVISION
R.H.	RIGHT HAND
R.H.R.	RIGHT HAND REVERSE
RM.	ROOM
RND	ROUND
RO	ROUGH OPENING
R.O.W.	RIGHT OF WAY
RR	RAILROAD
SCHED	SCHEDULE
S.C.	SOLID CORE
SECT	SECTION
SF	SQUARE FOOT
SGFT	STRUCTURAL GLAZED FACING TILE
SHT	SHEET
SIM	SIMILAR
SPEC	SPECIFICATION
SQ	SQUARE
SS	STAINLESS STEEL
SSP	STANDARD STEEL PIPE
STA.	STATION
STD	STANDARD
STL	STEEL
STOR	STORAGE
STRUCT	STRUCTURAL
STN	STAIN, STAINED
SURF. MTD.	SURFACE MOUNTED
SWC	SOLID WOOD CORE
T	TOILET
T/, T.O.	TOP OF
T.C.	TOP OF CURB
TEL	TELEPHONE
TEMP	TEMPERATURE
T.F.	TROWEL FINISH
T&G	TONGUE AND GROOVE
THK	THICK
T.O.S.	TOP OF STEEL
TS	TUBE STEEL
TYP	TYPICAL
UC	UNDERCUT
U.L.	UNDERWRITERS LABORATORY
UNEX.	UNEXCAVATED
UNFIN.	UNFINISHED
U.N.O.	UNLESS NOTED OTHERWISE
UR	URINAL
UTIL	UTILITY
VB	VAPOR BARRIER
VCT	VINYL COMPOSITION TILE
VEN	VENEER
VENT.	VENTILATION
VERT	VERTICAL
VEST.	VESTABULE
VFT	VINYL FLOOR TILE
V.I.F.	VERIFY IN FIELD
VOL	VOLUME
V.T.R	VENT THRU ROOF
VWC	VINYL WALL COVERING
W/	WITH
W/O	WITHOUT
W.C.	WATER CLOSET
WD	WOOD
WDW	WINDOW
W.H.	WATER HEATER
/WP	WORK POINT
W.P.	WATER PROOF
WSHR	WASHER
W.W.F.	WELDED WIRE FABRIC
W.W.M.	WELDED WIRE MESH
YD	YARD

SYMBOLS

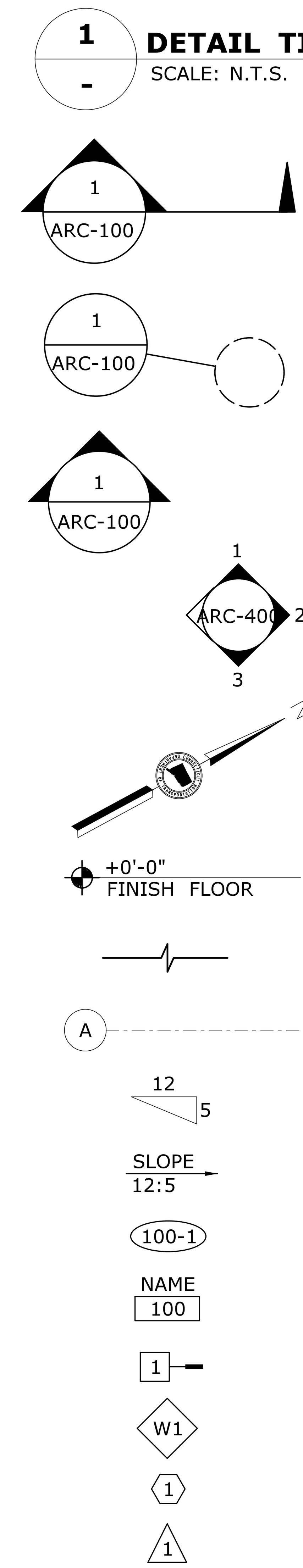

TITLE BAR - INDICATES DESCRIPTION, SCALE, DETAIL DESIGNATION., & DRAWING REFERENCE NO.

SECTION MARKER - INDICATES SECTION DESIGNATION AND SHEET WHERE LOCATED

DETAIL MARKER - INDICATES DETAIL DESIGNATION AND SHEET WHERE LOCATED

EXTERIOR ELEVATION MARKER - INDICATES ELEVATION DESIGNATION AND SHEET WHERE LOCATED

INTERIOR ELEVATION MARKER - INDICATES ELEVATION DESIGNATION AND SHEET WHERE LOCATED

PROJECT NORTH MARKER

DATUM OR LEVEL LINE MARKER - INDICATES ELEVATION LINE ON ELEVATION, SECTION, OR PLAN

CUT LINE - INDICATES CUTAWAY SECTION OF DRAWING

COLUMN LINE - STRUCTURAL GRID CENTERLINE DESIGNATION

ROOF SLOPE MARKER - INDICATES ROOF SLOPE ON ELEVATIONS AND SECTIONS

ROOF SLOPE MARKER - INDICATES ROOF SLOPE ON ROOF PLAN

DOOR NUMBER MARKER - INDICATES DOOR NUMBER. REFER TO DOOR SCHEDULE FOR INFORMATION

ROOM IDENTIFICATION MARKER - INDICATES ROOM NAME & NUMBER. REFER TO FINISH SCHEDULE FOR INFORMATION

WALL TYPE MARKER - INDICATES PARTITION TYPE. REFER TO PARTITION DETAILS FOR INFORMATION

WINDOW TYPE MARKER - INDICATES WINDOW NUMBER. REFER TO WINDOW TYPE DRAWING FOR INFORMATION

KEYNOTE MARKER - INDICATES KEYNOTE NUMBER. REFER TO KEYNOTES FOR INFORMATION

REVISION MARKER - INDICATES REVISION NUMBER. REFER TO REVISION BLOCK FOR INFORMATION

MATERIAL SYMBOLS

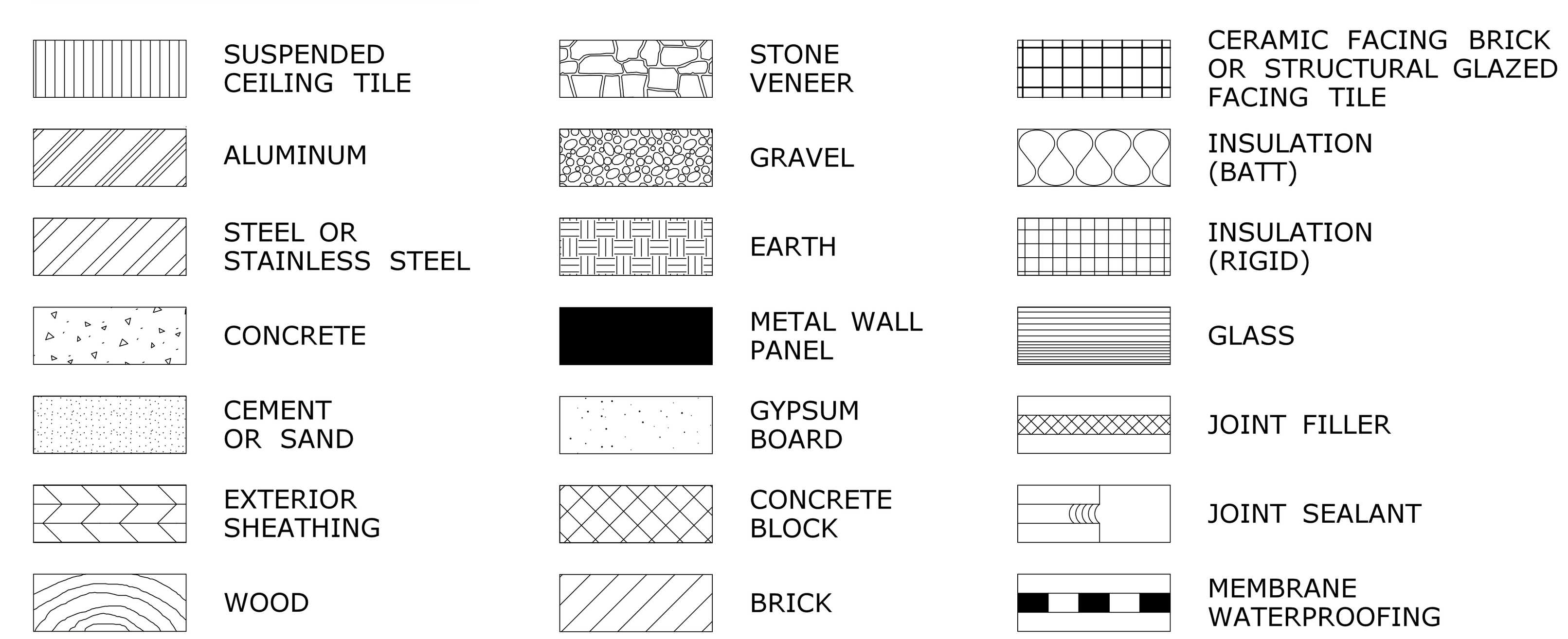

GENERAL CONTRACTOR NOTES:

1. DRAWINGS AND GENERAL PROVISIONS OF THE CONTRACT, INCLUDING GENERAL CONDITIONS OF DIVISION 1, STATE OF CONNECTICUT, DEPARTMENT OF TRANSPORTATION, STANDARD SPECIFICATIONS FOR ROADS, BRIDGES, AND INCIDENTAL CONSTRUCTION, FORM 816 - 2004 AND SUPPLEMENTAL SPECIFICATIONS THERETO, SHALL BE A PART OF THIS CONTRACT.

2. DRAWING NOTES ARE NOT INTENDED TO REPLACE SPECIFICATIONS. SEE SPECIFICATIONS FOR REQUIREMENTS IN ADDITION TO DRAWING NOTES.
3. METHODS OF DEMOLITION, AND ERECTION IS THE CONTRACTOR'S RESPONSIBILITY.
4. THE CONTRACTOR SHALL REPORT ANY DISCREPANCIES IN THE DRAWINGS AND/OR SPECIFICATIONS TO THE ENGINEER FOR CLARIFICATIONS OR ADJUSTMENTS PRIOR TO COMMENCING WORK.

5. THE CONTRACTOR SHALL PHASE THEIR WORK SO AS TO MAINTAIN THE NORMAL TRAIN OPERATIONS AND EXISTING ACCESS FOR PASSENGER MOVEMENT FOR BOARDING AND DEPARTING THE TRAINS AND THE EXISTING ACCESS TO ADJACENT PARKING FACILITIES.

6. CONTRACTORS MUST ESTABLISH A TWENTY-FIVE (25) FOOT FOUL LINE PRIOR TO THE START OF WORK BY EITHER DRIVING STAKES, TAPING OFF OR ERECTING A TEMPORARY FENCE, OR PROVIDING AN ALTERNATE METHOD AS APPROVED BY THE AMTRAK REPRESENTATIVE. REFER TO THE SPECIFICATIONS FOR MORE INFORMATION PERTAINING TO AMTRAK REQUIREMENTS.

7. THE CONTRACTOR SHALL PROTECT THE GENERAL PUBLIC, RAILROAD PERSONNEL AND ALL RAILROAD OPERATIONS FROM CONSTRUCTION ACTIVITIES AND SHALL PERFORM THEIR WORK IN ACCORDANCE WITH THE CONTRACT REQUIREMENTS, STATEMENT OF WORK, THE NATIONAL ELECTRIC SAFETY CODE (NESC), AREMA, AMTRAK, THE HOST RAILROAD REGULATIONS, OSHA AND THE REGULATIONS OF THE AUTHORITIES HAVING JURISDICTION.

8. THE CONTRACTOR SHALL COORDINATE WITH AMTRAK TO LOCATE, PROTECT, AND RESTORE VERIFICATION AND MARKING OF ALL UTILITIES, SIGNAL AND COMMUNICATION CABLES MUST BE PERFORMED PRIOR TO ANY EXCAVATION.

9. THE CONTRACTOR SHALL SUBMIT FOR REVIEW AND APPROVAL A WORK PLAN THAT FULLY DESCRIBES THE WORK TO BE PERFORMED. THE WORK PLAN MUST ENCOMPASS THE TIME FROM NOTICE TO PROCEED TO CLOSE OUT OF THE PROJECT. THE WORK PLAN MUST DESCRIBE THE TYPES OF ACTIVITIES, LOCATION OF ACTIVITIES ON THE PROJECT SITE, EQUIPMENT, MATERIAL AND LABOR. THE WORK AND SEQUENCING MUST CONTAIN THE TIME FRAMES FOR EACH ACTIVITY.

10. ALL CONSTRUCTION ACTIVITIES WITHIN 25 FEET OF AN ACTIVE TRACK ARE CONSIDERED POTENTIALLY FOULING THE TRACK. THE CONTRACTOR WILL BE REQUIRED, DURING THE CONSTRUCTION, TO CLEAR THE FOUL AREA BY REMOVING ALL PERSONNEL AND EQUIPMENT A MINIMUM OF 15 FEET FROM THE CENTERLINE OF THE NEAREST TRACK DURING TRAIN OPERATIONS. THIS NOTICE FOR CLEARING THE FOUL AREA DURING TRAIN OPERATIONS WILL BE GIVEN BY A RAILROAD PROTECTION WATCHMAN WHO WILL BE PRESENT DURING CONSTRUCTION. THE CONTRACTOR MUST CLEAR THE FOUL AREA AND REMAIN CLEAR OF THE FOUL AREA, UNTIL ALLOWED TO RETURN AS INSTRUCTED BY THE WATCHMAN. THIS REQUIREMENT TO CLEAR AND REMAIN CLEAR OF THE FOUL AREA MAY OCCUR AT ANY TIME DURING THE CONTRACTOR'S ACTIVITIES. THE WATCHMAN ACTIVITIES AND PRESENCE WILL BE DETERMINED BY AMTRAK AND WILL BE BASED UPON THE APPROVED WORK PLAN SUBMITTED BY THE CONTRACTOR. ALL COST OF THE WATCHMAN ACTIVITIES WILL BE BORNE BY AMTRAK.

11. THE CONTRACTOR SHALL ARRANGE AT THEIR EXPENSE FOR ANY STAGING AND STORAGE FOR EQUIPMENT AND MATERIAL. NO EQUIPMENT OR MATERIAL SHALL BE STAGED OR STORED IN THE FOUL AREA WHEN CONSTRUCTION ACTIVITIES ARE NOT TAKING PLACE. THE CONTRACTOR SHALL CLEAN UP THE FOUL AREA AFTER EACH WORK DAY.

12. CONTRACTOR MUST SUPPLY AN ADEQUATE LENGTH OF GROUNDING CABLE (4/0 COPPER WITH APPROVED CLAMPS) TO GROUND EACH PIECE OF EQUIPMENT WORKING NEAR OR ADJACENT TO ANY OVERHEAD WIRE. THIS GROUND CONNECTION IS SUBJECT TO AMTRAK INSPECTION. REFER TO AMTRAK SPECIFICATIONS.

REV.	DATE	REVISION DESCRIPTION	SHEET NO.
-	-	-	-
-	-	-	-
-	-	-	-
-	-	-	-
-	-	-	-
-	-	-	-

THE INFORMATION, INCLUDING ESTIMATED QUANTITIES OF WORK, SHOWN ON THESE SHEETS IS BASED ON LIMITED INVESTIGATIONS BY THE STATE AND IS IN NO WAY WARRANTED TO INDICATE THE CONDITIONS OF ACTUAL QUANTITIES OF WORK WHICH WILL BE REQUIRED.

Plotted Date: 8/19/2014

DESIGNER/DRAFTER: **D. PEKAROVIC**
CHECKED BY: **A SARDILLI**
SCALE AS NOTED

STATE OF CONNECTICUT
DEPARTMENT OF TRANSPORTATION

Filename: ...\FA_CGR_CPS_0170-2296_063__05_ARC__001.dgn

SIGNATURE/ BLOCK:
Baker
Michael Baker Engineering Inc.
500 Enterprise Drive
Suite 2B
Rocky Hill, CT 06067

STATE OF CONNECTICUT SCOTT M. DELESDERNIER No. 19079 LICENSED PROFESSIONAL ENGINEER

PROJECT TITLE: **NEW HAVEN - HARTFORD SPRINGFIELD RAIL CORRIDOR**

TOWN: **HARTFORD**

DRAWING TITLE: **GENERAL NOTES**

PROJECT NO. **170-3261**
DRAWING NO. **ARC-001**
SHEET NO. **11.02**

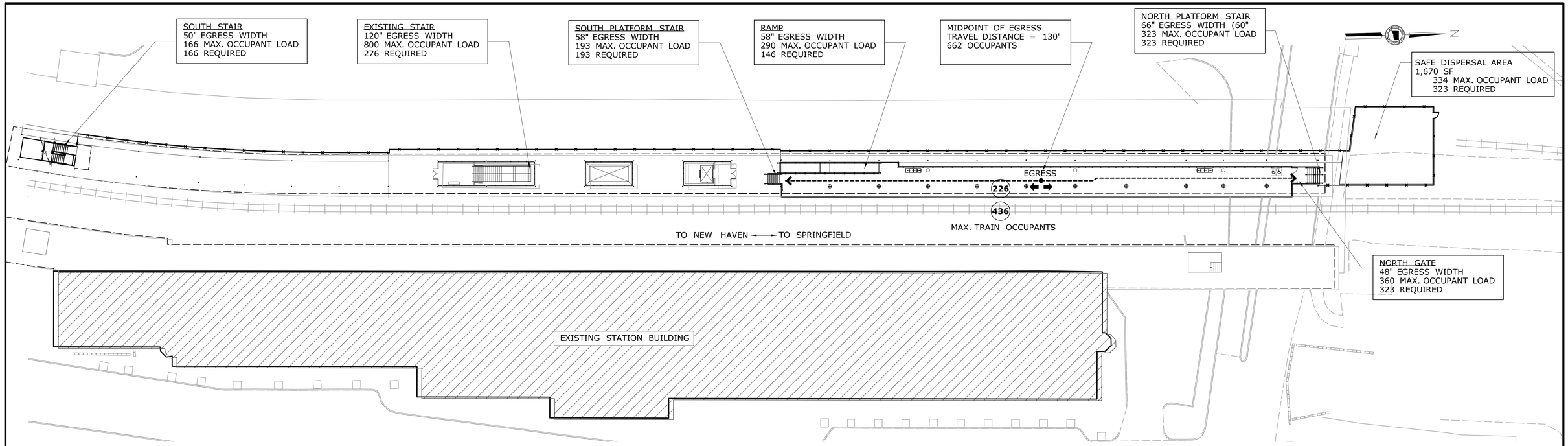

1 **PLATFORM EGRESS PLAN**
SCALE: 1"=25'-0"

CODES & STANDARDS

2005 STATE BUILDING CODE
- 2003 INTERNATIONAL BUILDING CODE
- 2009 INTERNATIONAL RESIDENTIAL CODE *
- 2003 INTERNATIONAL EXISTING BUILDING CODE
- 2003 INTERNATIONAL MECHANICAL CODE
- 2003 INTERNATIONAL PLUMBING CODE
- 2009 INTERNATIONAL ENERGY CONSERVATION CODE**
- 2011 NATIONAL ELECTRICAL CODE NFPA 70-2010
- ICC/ANSI A117.1-2003
- DECEMBER 31, 2005 CONNECTICUT SUPPLEMENT
- AUGUST 1, 2009 - 2009 AMENDMENT
- OCTOBER 6, 2011 - 2011 AMENDMENT TO ADOPT THE 2009 INTERNATIONAL ENERGY CONSERVATION CODE**
- FEBRUARY 14, 2014 - 2013 AMENDMENT TO ADOPT THE 2009 INTERNATIONAL RESIDENTIAL CODE AND THE 2011 NATIONAL ELECTRICAL CODE*

2005 CONNECTICUT STATE FIRE SAFETY CODE
- 2003 INTERNATIONAL FIRE CODE
- DECEMBER 31, 2005 CONNECTICUT SUPPLEMENT
- AUGUST 1, 2009 - 2009 AMENDMENT

(REFER TO CONTRACT SPECIFICATIONS, STRUCTURAL AND ELECTRICAL PLANS FOR OTHER REFERENCES AND CODES WHICH MAY APPLY)

LEGEND

25	NUMBER OF OCCUPANTS IN SPACE
A-3	OCCUPANCY CLASSIFICATION
---→	PATH OF EGRESS
EGRESS ⇔	MIDPOINT EGRESS TRAVEL DISTANCE

TRAIN STATION CODE ANALYSIS AND GENERAL REQUIREMENTS

SECTION 303.1 USE GROUP CLASSIFICATION:
ASSEMBLY A-3 (WAITING AREAS IN PASSENGER TERMINALS)

CT STATE THRESHOLD LIMITS EXCEEDED: NO

ALL LEVELS ABOVE GRADE

CONSTRUCTION TYPE: IIB NON-COMBUSTIBLE UNPROTECTED

SECTION 502.1 PLATFORM CODE ANALYSIS:
COVERED CANOPY SECTIONS CONTRIBUTE TO BUILDING AREA

SECTION 1007.12 ACCESSIBLE MEANS OF EGRESS REQUIRED AND PROVIDED

EGRESS CAPACITY:

HIGH LEVEL PLATFORM

(NORTH PLATFORM STAIR = 66" CLEAR WIDTH) / (.3 INCHES PER 1005.1) =	220
(SOUTH PLATFORM STAIR = 56" CLEAR WIDTH) / (.3 INCHES PER 1005.1) =	193
(RAMP = 58" CLEAR WIDTH) / (.2 INCHES PER 1005.1) =	290
TOTAL CAPACITY:	703
TOTAL OCCUPANCY:	662

LOW LEVEL PLATFORM

(1 STAIR X 98" CLEAR WIDTH) / (.3 INCHES PER 1005.1) =	326
(1 STAIR X 54" CLEAR WIDTH) / (.3 INCHES PER 1005.1) =	180
(68" PLATFORM CLEAR WIDTH/.2 INCHES PER 1005.1) =	340
TOTAL CAPACITY:	846

SECTION 1007.5.4 IDENTIFICATION SIGNAGE IS REQUIRED

TABLE 1015.1 MAXIMUM EXIT TRAVEL DISTANCE
REQUIRED: 200'
PROPOSED=130' FROM HIGH LEVEL PLATFORM

OCCUPANCY (BASED ON TABLE 1004.1.1), 15 GSF PER OCCUPANT-SIMILAR TO AIRPORT WAITING AREAS

HIGH LEVEL PLATFORM	SF NET	OCCUPANCY
((14'-0" X 195'-0") + (11'-0" X 60'-0"))/ (15 NET PER 1004.1.1)	3390	226
TRAIN LOAD (432 PASSENGERS AND 4 STAFF)		436
TOTAL CAPACITY		662

SAFE DISPERSAL AREA
323 OCCUPANT LOAD X 5 SF/PERSON = 1,615
109' x 15.3' = 1,670 SF PROVIDED

REV.	DATE	REVISION DESCRIPTION	SHEET NO.

THE INFORMATION, INCLUDING ESTIMATED QUANTITIES OF WORK, SHOWN ON THESE SHEETS IS BASED ON LIMITED INVESTIGATIONS BY THE STATE AND IS IN NO WAY WARRANTED TO INDICATE THE CONDITIONS OF ACTUAL QUANTITIES OF WORK WHICH WILL BE REQUIRED.

Plotted Date: 8/19/2014

DESIGNER/DRAFTER: R WRIGHT
CHECKED BY: R BRAREN
SCALE IN FEET 0 20 40
SCALE 1"=20'

STATE OF CONNECTICUT
DEPARTMENT OF TRANSPORTATION

Filename: ...\FA..CGR..CPS..0170-2296..063...05..ARC...002.dgn

SIGNATURE/BLOCK:
Baker
Michael Baker Engineering Inc.
500 Enterprise Drive
Suite 2B
Rocky Hill, CT 06067

PROJECT TITLE:
NEW HAVEN - HARTFORD SPRINGFIELD RAIL CORRIDOR

TOWN: **HARTFORD**

DRAWING TITLE: **CODE COMPLIANCE PLAN**

PROJECT NO. **170-3261**
DRAWING NO. **ARC-002**
SHEET NO. **11.03**

NO PERM POINT SET

SPRUCE STREET

NEW STAIR IN EXIST. OPENING, SEE DWG. ARC-501

HATCHED AREA INDICATES AREA OF WOOD DECKING TO BE REPLACED

Subject To A 4.5' Right Of Way In Favor Of The City Of Hartford

EDGE OF VIADUCT STRUCTURE

N/F GREATER HARTFORD TRANSIT DISTRICT

WALL

EXISTING CANOPY COLUMN, TYP.

EDGE OF EXISTING CANOPY

EDGE OF EXISTING PLATFORM (LOW-LEVEL BOARDING)

HATCHED AREA INDICATES AREA OF WOOD DECKING TO BE REPLACED

NEW HIGH LEVEL PLATFORM. SEE DWG ARC-101

SAFE DISPERSAL AREA, SEE DETAIL 2

AREA HAS BEEN RECONSTRUCTED AFTER THE FLIGHT

EXISTING STAIR

EXISTING ELEVATOR

AREA HAS BEEN RECONSTRUCTED AFTER THE FLIGHT

UNDER CONST.

AREA HAS BEEN RECONSTRUCTED AFTER THE FLIGHT WITH CANOPY AT ABAND. TRACK GRADE

Subject To An Easement For Water And Sewage In Favor Of The City Of Hartford

AREA HAS BEEN RECONSTRUCTED AFTER THE FLIGHT WITH CANOPY AT ABAND. TRACK GRADE

FIELD LOCATION OF OVERHANG

GLASS DOORS

DOOR

(APPROX.LOC. OF CABLE/FIBER)

TRACK 1

EDGE OF WOOD PLATFORM

EDGE OF WOOD PLATFORM

EDGE OF CONC. PLATFORM

CENTERLINE

CANOPY

EDGE OF CONC. PLATFORM

25'-6"

WOOD PLATFORMS

260'-0"

OVERHANG

EDGE OF WOOD PLATFORM

OVERHANG

ASYLUM STREET

WOOD DOORS

WOOD DOORS

WOOD DOORS

WOOD DOORS

WOOD DOORS

Information Provided By Others-Amtrak Cable Installation (APPROX.LOC. OF CABLE/FIBER)

PROPOSED COMMUNICATION ROOM BELOW. SEE 5/ARC-102 & ELECT. DWGS.

PROPOSED ELECT. ROOM BELOW. SEE 3/ARC-102 & ELECT. DWGS.

UNION STATION

WALL

Subject To An Easement For Pipes In Favor Of The City Of Hartford

CHURCH STREET

BB

WALLS

APPROXIMATE CENTERLINE OF EXISTING TRACK (N.I.C., SEE NOTE)

Subject To An Easement For Viaducts And Supports Of Railroad In Favor Of National Railroad Passenger Corp.

UNION PLACE

N/F 450 CHURCH STREET

1 - ARCHITECTURAL KEY PLAN

SCALE: 1"=25'-0"

NEW 8' CHAIN-LINK FENCE

39'-1"

GATE

SAFE DISPERSAL AREA

NEW HIGH LEVEL PLATFORM. SEE DWG ARC-101

16'-8"

39'-0"

42'-2"

(APPROX.LOC. OF CABLE/FIBER)

Information Provided By Others-Amtrak Cable Installation

47'-7"

END OF EXIST. PLATFORM

2 ARC-100 SAFE DISPERSAL AREA DETAIL

SCALE: 1"=25'-0"

NOTE:
THE APPROXIMATE CENTERLINE OF THE EXISTING TRACK HAS BEEN ESTABLISHED UTILIZING DATA INCLUDED IN THE SURVEY PROVIDED BY THE CONNECTICUT DEPARTMENT OF TRANSPORTATION. IT IS SHOWN HERE FOR INFORMATIONAL PURPOSES ONLY AND IS IN NO WAY WARRANTED TO INDICATE THE AS-BUILT CONDITIONS IN THE FIELD. THE CONTRACTOR SHALL VERIFY THE LOCATION OF THE EXISTING TRACK VIA A FIELD SURVEY PRIOR TO START OF PLATFORM CONSTRUCTION AND SHALL NOTIFY THE ENGINEER OF ANY DISCREPANCIES. AT ALL TIMES DURING THE CONSTRUCTION OF THE PLATFORMS, THE CONTRACTOR SHALL MAINTAIN THE HORIZONTAL AND VERTICAL OFFSETS AS INDICATED IN THE CONTRACT DOCUMENTS.

REV.	DATE	REVISION DESCRIPTION	SHEET NO.

THE INFORMATION, INCLUDING ESTIMATED QUANTITIES OF WORK, SHOWN ON THESE SHEETS IS BASED ON LIMITED INVESTIGATIONS BY THE STATE AND IS IN NO WAY WARRANTED TO INDICATE THE CONDITIONS OF ACTUAL QUANTITIES OF WORK WHICH WILL BE REQUIRED.

Plotted Date: 8/19/2014

DESIGNER/DRAFTER: R WRIGHT

CHECKED BY: R BRAREN

STATE OF CONNECTICUT
DEPARTMENT OF TRANSPORTATION

Filename: ...\FA..CGR..CPS..0170-2296..063...05..ARC...100.dgn

SIGNATURE/BLOCK: Baker
Michael Baker Engineering Inc.
500 Enterprise Drive
Suite 2B
Rocky Hill, CT 06067

STATE OF CONNECTICUT
JOHN M. DELESKI
No. 15070
LICENSED PROFESSIONAL ENGINEER

PROJECT TITLE:
NEW HAVEN - HARTFORD SPRINGFIELD RAIL CORRIDOR

TOWN: HARTFORD

DRAWING TITLE: ARCHITECTURAL KEY PLAN

PROJECT NO. 170-3261

DRAWING NO. ARC-100

SHEET NO. 11.04

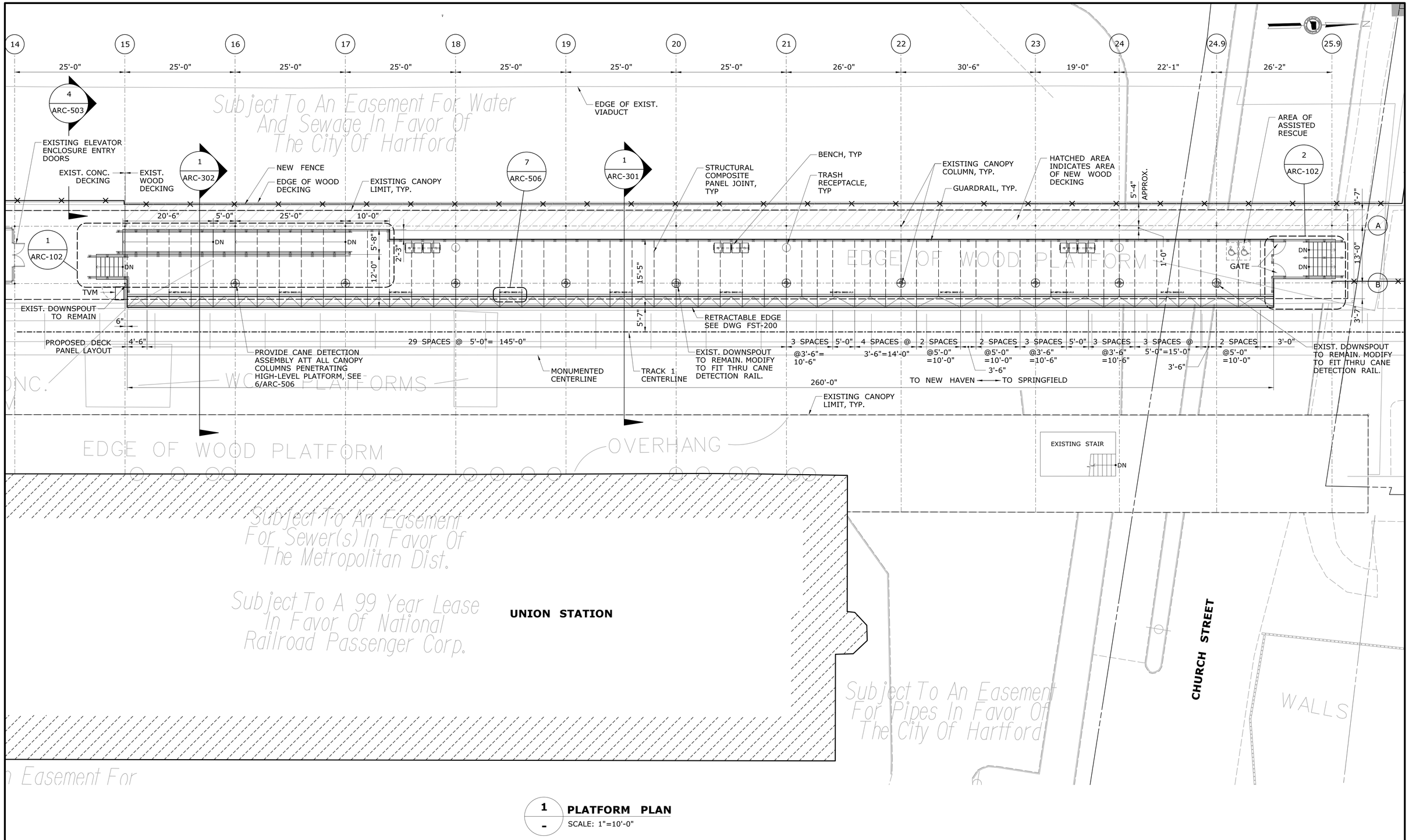

1 **PLATFORM PLAN**
SCALE: 1"=10'-0"

REV.	DATE	REVISION DESCRIPTION	SHEET NO.
-	-	-	-
-	-	-	-
-	-	-	-
-	-	-	-
-	-	-	-
-	-	-	-

THE INFORMATION, INCLUDING ESTIMATED QUANTITIES OF WORK, SHOWN ON THESE SHEETS IS BASED ON LIMITED INVESTIGATIONS BY THE STATE AND IS IN NO WAY WARRANTED TO INDICATE THE CONDITIONS OF ACTUAL QUANTITIES OF WORK WHICH WILL BE REQUIRED.

Plotted Date: 8/19/2014

DESIGNER/DRAFTER: R WRIGHT
CHECKED BY: R BRAREN
SCALE AS NOTED

STATE OF CONNECTICUT
DEPARTMENT OF TRANSPORTATION

Filename: ...\FA..CGR..CPS..0170-2296..063...05..ARC...101.dgn

SIGNATURE/BLOCK: Baker
Michael Baker Engineering Inc.
500 Enterprise Drive
Suite 2B
Rocky Hill, CT 06067

PROJECT TITLE: NEW HAVEN - HARTFORD SPRINGFIELD RAIL CORRIDOR

TOWN: HARTFORD

DRAWING TITLE: PLATFORM PLAN

PROJECT NO. 170-3261
DRAWING NO. ARC-101
SHEET NO. 11.05

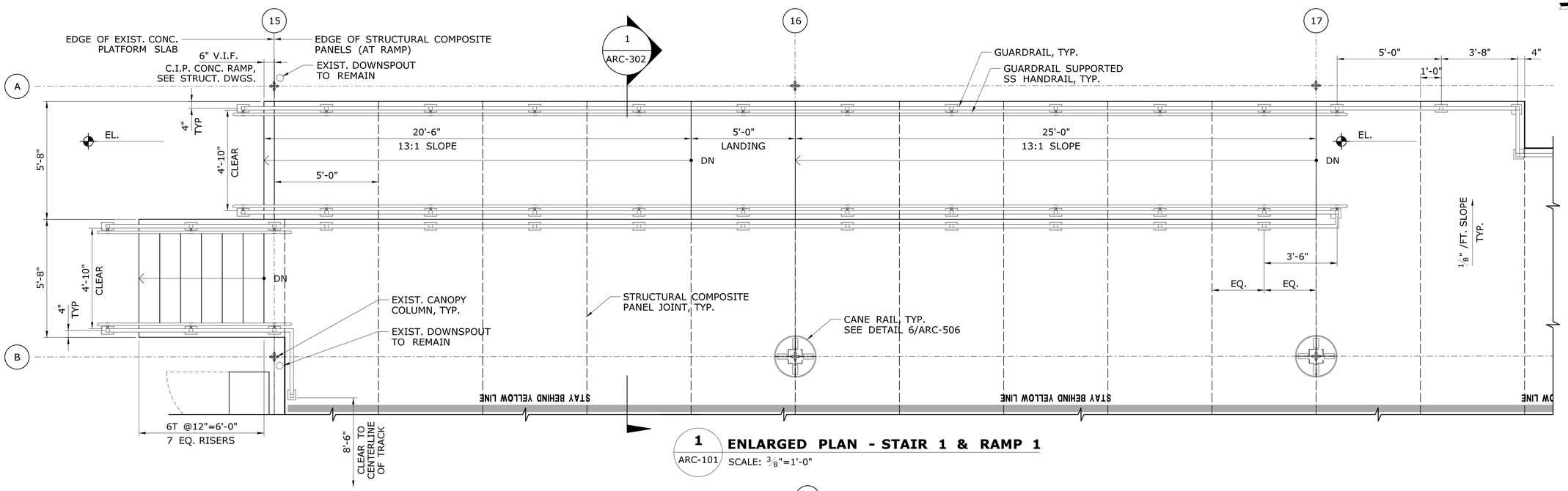

1 ARC-101 ENLARGED PLAN - STAIR 1 & RAMP 1
SCALE: 3/8"=1'-0"

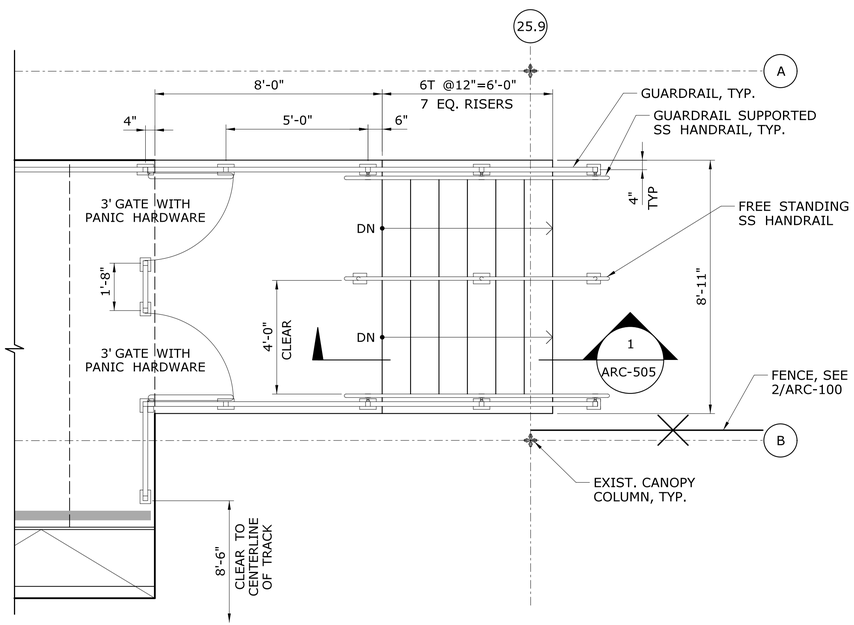

2 ARC-101 ENLARGED PLAN - STAIR 2
SCALE: 3/8"=1'-0"

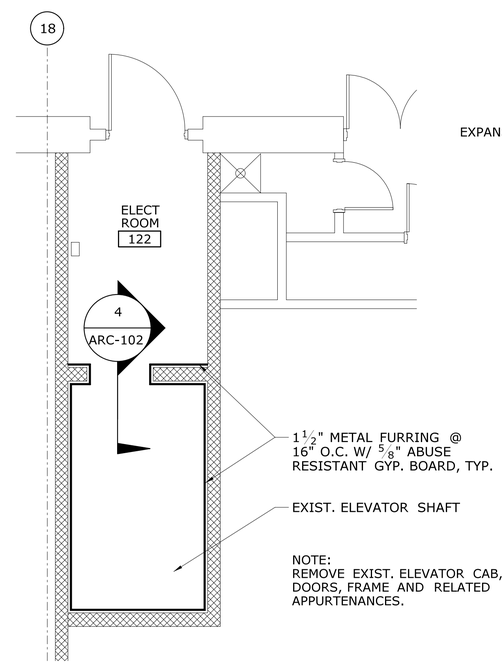

3 ARC-100 ENLARGED PLAN - ELECT. ROOM
SCALE: 1/4'=1'-0"

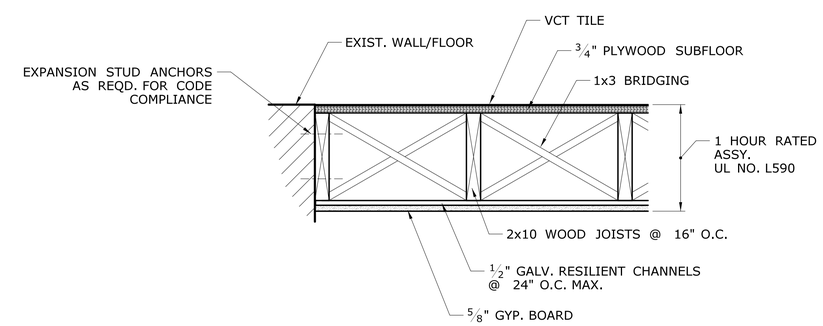

4 ARC-102 TYP. SECTION AT FLOOR & CEILING
SCALE: 1/4'=1'-0"

REV.	DATE	REVISION DESCRIPTION	SHEET NO.
-	-	-	-
-	-	-	-
-	-	-	-
-	-	-	-
-	-	-	-
-	-	-	-

THE INFORMATION, INCLUDING ESTIMATED QUANTITIES OF WORK, SHOWN ON THESE SHEETS IS BASED ON LIMITED INVESTIGATIONS BY THE STATE AND IS IN NO WAY WARRANTED TO INDICATE THE CONDITIONS OF ACTUAL QUANTITIES OF WORK WHICH WILL BE REQUIRED.

Plotted Date: 8/19/2014

DESIGNER/DRAFTER: R WRIGHT
CHECKED BY: R BRAREN
SCALE AS NOTED

STATE OF CONNECTICUT
DEPARTMENT OF TRANSPORTATION

Filename: ...\FA..CGR..CPS..0170-2296..063..05..ARC..102.dgn

SIGNATURE/BLOCK: Baker
Michael Baker Engineering Inc.
500 Enterprise Drive
Suite 2B
Rocky Hill, CT 06067

PROJECT TITLE: NEW HAVEN - HARTFORD SPRINGFIELD RAIL CORRIDOR

TOWN: HARTFORD

DRAWING TITLE: ENLARGED PLANS

PROJECT NO. 170-3261
DRAWING NO. ARC-102
SHEET NO. 11.06

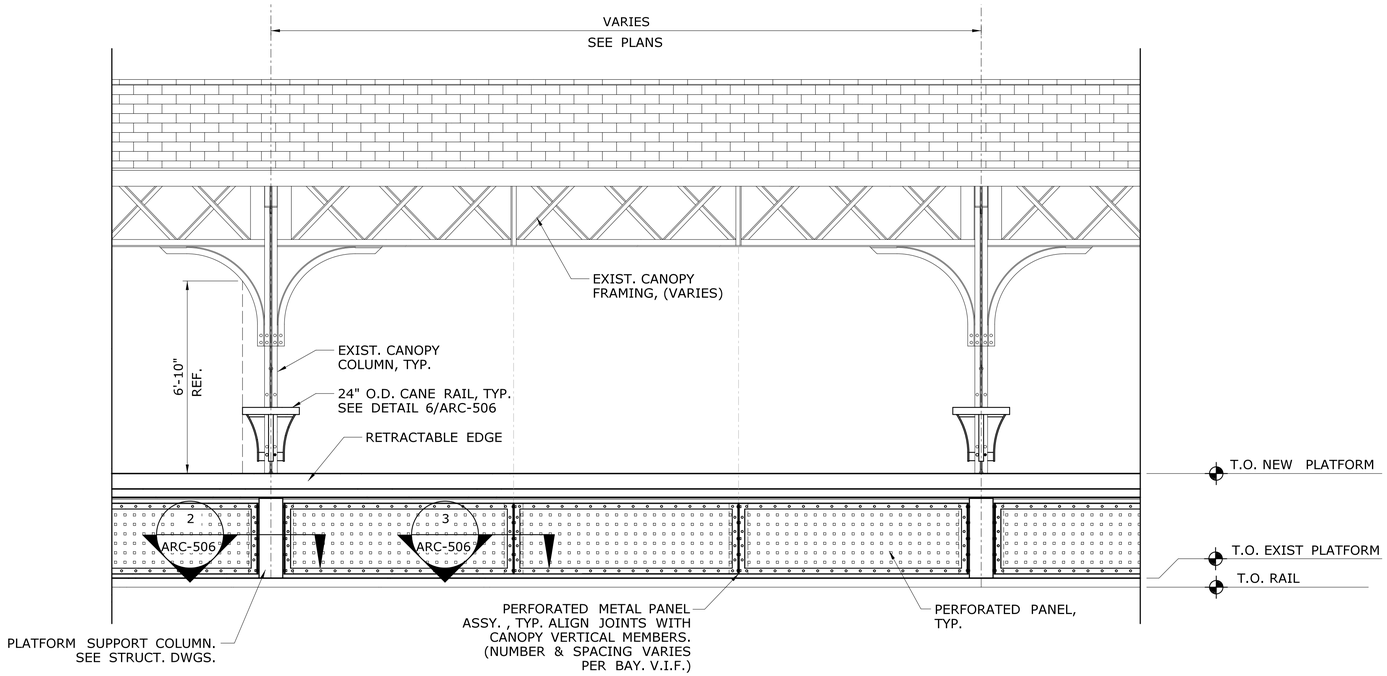

1 / ARC-101 **PARTIAL EAST ELEVATION - PLATFORM**

SCALE: 3/8"=1'-0"

NOTE: WEST SIDE OF PLATFORM AND RAMP ARE SIMILAR

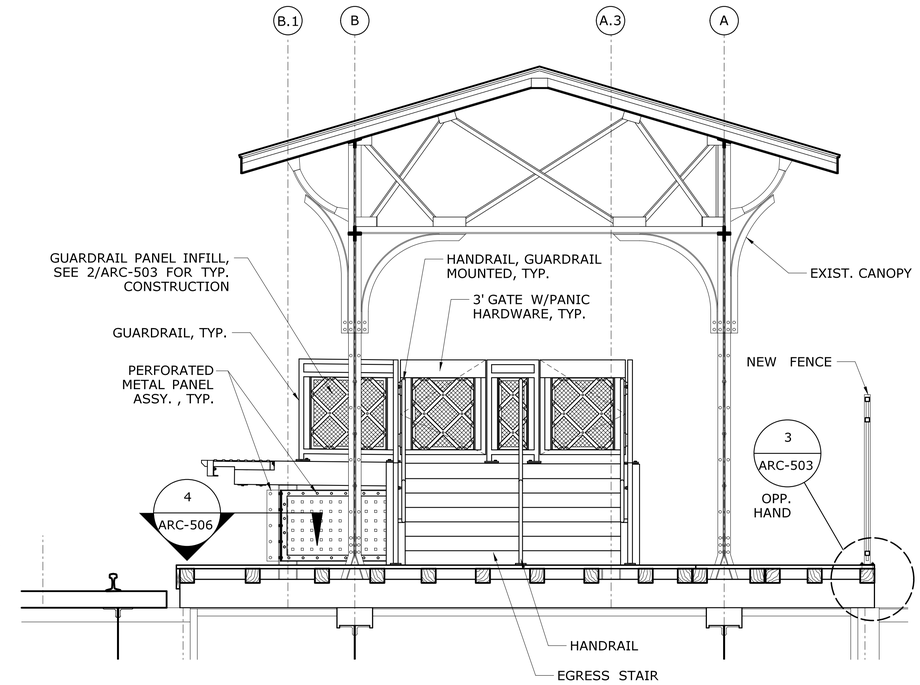

2 / ARC-101 **NORTH ELEVATION - PLATFORM**

SCALE: 3/8"=1'-0"

REV.	DATE	REVISION DESCRIPTION	SHEET NO.
-	-	-	-
-	-	-	-
-	-	-	-
-	-	-	-
-	-	-	-
-	-	-	-

THE INFORMATION, INCLUDING ESTIMATED QUANTITIES OF WORK, SHOWN ON THESE SHEETS IS BASED ON LIMITED INVESTIGATIONS BY THE STATE AND IS IN NO WAY WARRANTED TO INDICATE THE CONDITIONS OF ACTUAL QUANTITIES OF WORK WHICH WILL BE REQUIRED.

Plotted Date: 8/19/2014

DESIGNER/DRAFTER: R WRIGHT
CHECKED BY: R BRAREN
SCALE AS NOTED

STATE OF CONNECTICUT
DEPARTMENT OF TRANSPORTATION

Filename: ...\FA..CGR..CPS..0170-2296..063...05..ARC...201.dgn

SIGNATURE/BLOCK:
Baker
Michael Baker Engineering Inc.
500 Enterprise Drive
Suite 2B
Rocky Hill, CT 06067

PROJECT TITLE:
NEW HAVEN - HARTFORD SPRINGFIELD RAIL CORRIDOR

TOWN: HARTFORD

DRAWING TITLE: PARTIAL ELEVATIONS - EAST PLATFORM

PROJECT NO. 170-3261
DRAWING NO. ARC-201
SHEET NO. 11.07

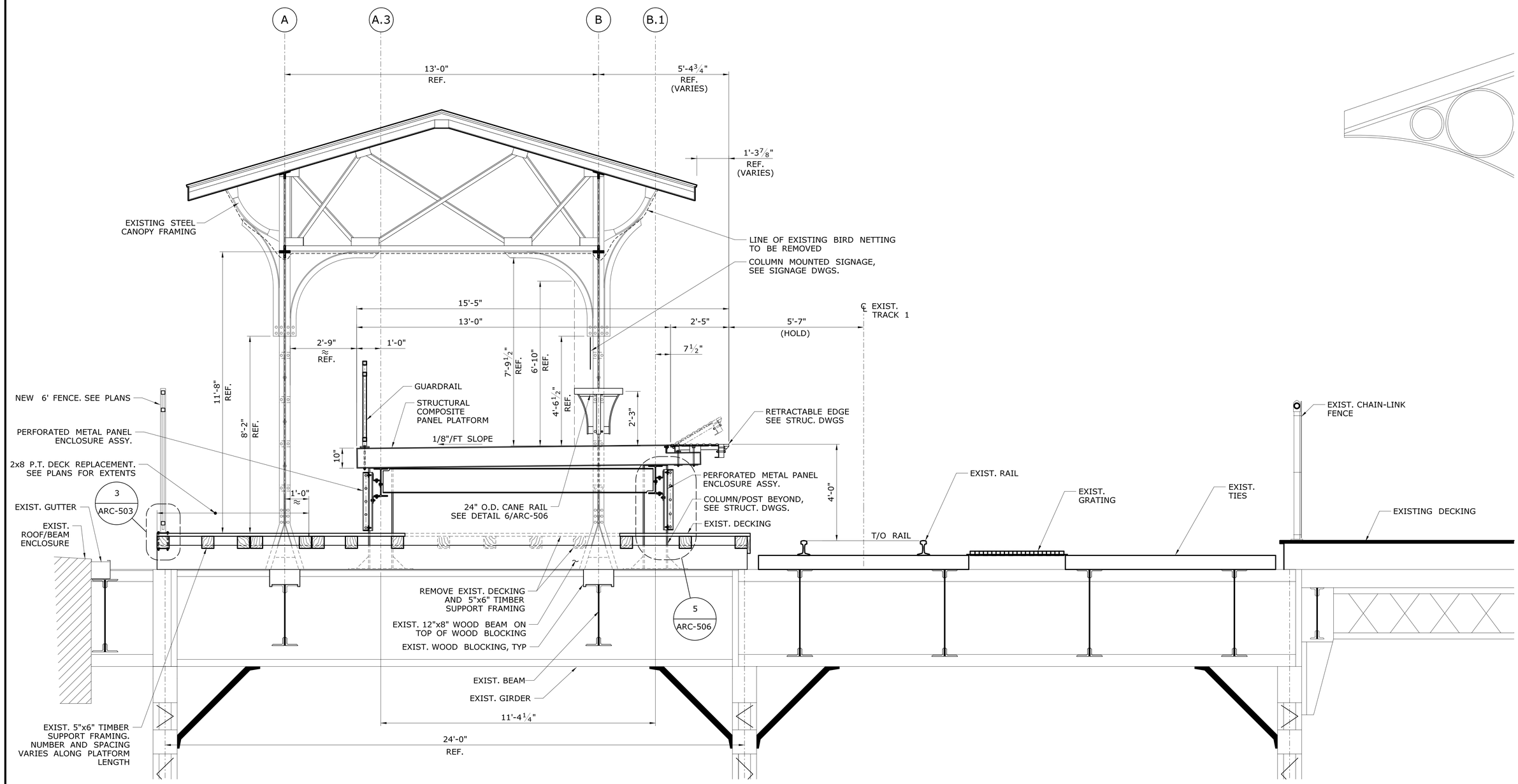

1 ARC-101 **PLATFORM SECTION**

SCALE: 1/2"=1'-0"

REV.	DATE	REVISION DESCRIPTION	SHEET NO.
-	-	-	-
-	-	-	-
-	-	-	-
-	-	-	-
-	-	-	-
-	-	-	-

THE INFORMATION, INCLUDING ESTIMATED QUANTITIES OF WORK, SHOWN ON THESE SHEETS IS BASED ON LIMITED INVESTIGATIONS BY THE STATE AND IS IN NO WAY WARRANTED TO INDICATE THE CONDITIONS OF ACTUAL QUANTITIES OF WORK WHICH WILL BE REQUIRED.

Plotted Date: 8/19/2014

DESIGNER/DRAFTER: R WRIGHT

CHECKED BY: R BRAREN

SCALE AS NOTED

STATE OF CONNECTICUT
DEPARTMENT OF TRANSPORTATION

Filename: ...\FA..CGR..CPS..0170-2296..063...05..ARC...301.dgn

SIGNATURE/BLOCK: Baker
Michael Baker Engineering Inc.
500 Enterprise Drive
Suite 2B
Rocky Hill, CT 06067

STATE OF CONNECTICUT DEPARTMENT OF TRANSPORTATION
M. 19079
LICENSED PROFESSIONAL ENGINEER

PROJECT TITLE:
NEW HAVEN - HARTFORD SPRINGFIELD RAIL CORRIDOR

TOWN: **HARTFORD**

DRAWING TITLE: **PLATFORM SECTION 1**

PROJECT NO. **170-3261**

DRAWING NO. **ARC-301**

SHEET NO. **11.08**

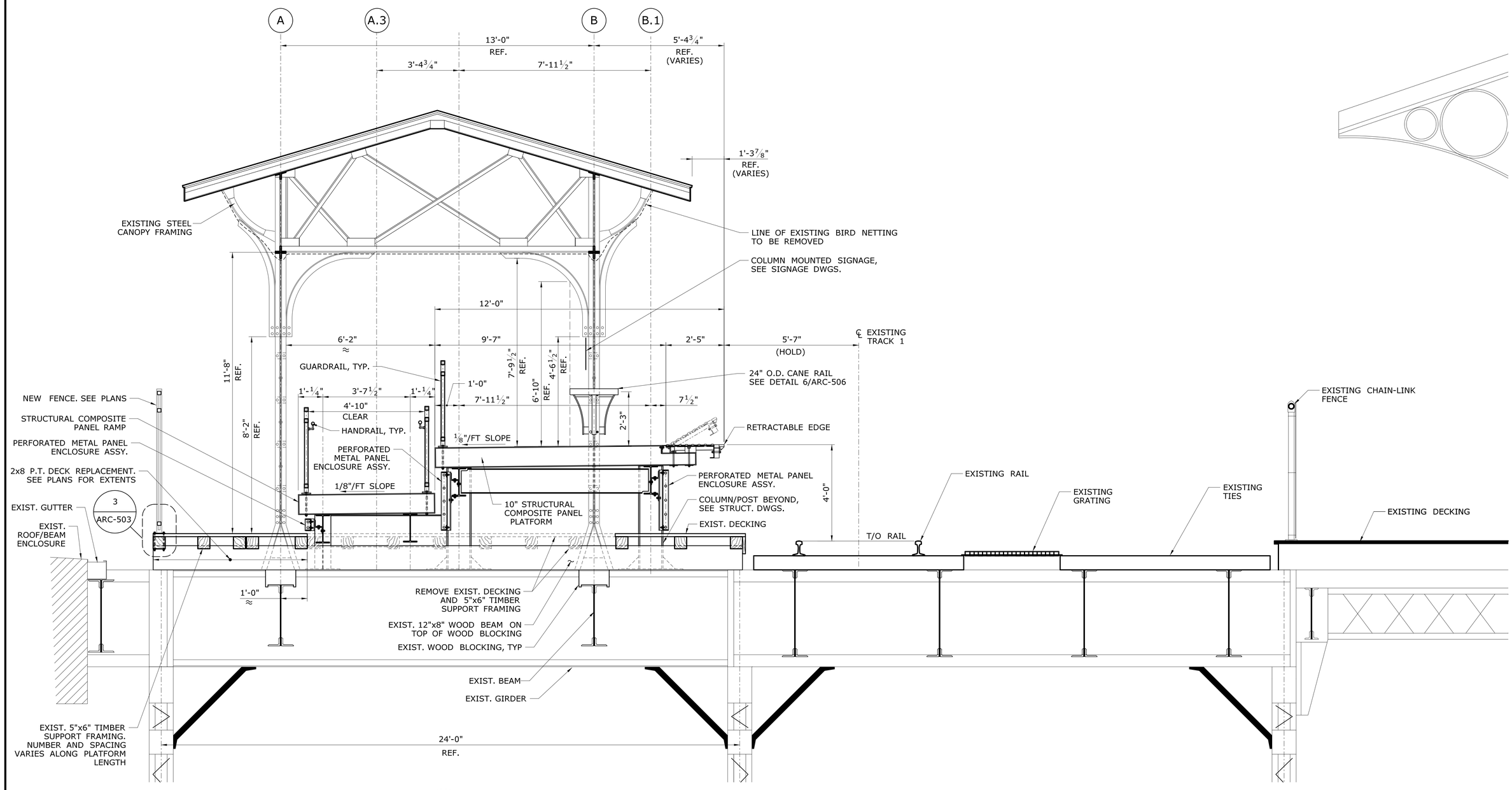

1 / ARC-101 **PLATFORM SECTION @ RAMP**

SCALE: ½"=1'-0"

REV.	DATE	REVISION DESCRIPTION	SHEET NO.
-	-	-	-
-	-	-	-
-	-	-	-
-	-	-	-
-	-	-	-
-	-	-	-

THE INFORMATION, INCLUDING ESTIMATED QUANTITIES OF WORK, SHOWN ON THESE SHEETS IS BASED ON LIMITED INVESTIGATIONS BY THE STATE AND IS IN NO WAY WARRANTED TO INDICATE THE CONDITIONS OF ACTUAL QUANTITIES OF WORK WHICH WILL BE REQUIRED.

Plotted Date: 8/19/2014

DESIGNER/DRAFTER: R WRIGHT

CHECKED BY: R BRAREN

SCALE AS NOTED

STATE OF CONNECTICUT
DEPARTMENT OF TRANSPORTATION

Filename: ...\FA_CGR_CPS_0170-2296_063_05_ARC_302.dgn

SIGNATURE/BLOCK: Baker
Michael Baker Engineering Inc.
500 Enterprise Drive
Suite 2B
Rocky Hill, CT 06067

STATE OF CONNECTICUT · DEPARTMENT OF TRANSPORTATION · No. 19079 · LICENSED PROFESSIONAL ENGINEER

PROJECT TITLE: NEW HAVEN - HARTFORD SPRINGFIELD RAIL CORRIDOR

TOWN: HARTFORD

DRAWING TITLE: PLATFORM SECTION 2

PROJECT NO. 170-3261

DRAWING NO. ARC-302

SHEET NO. 11.09

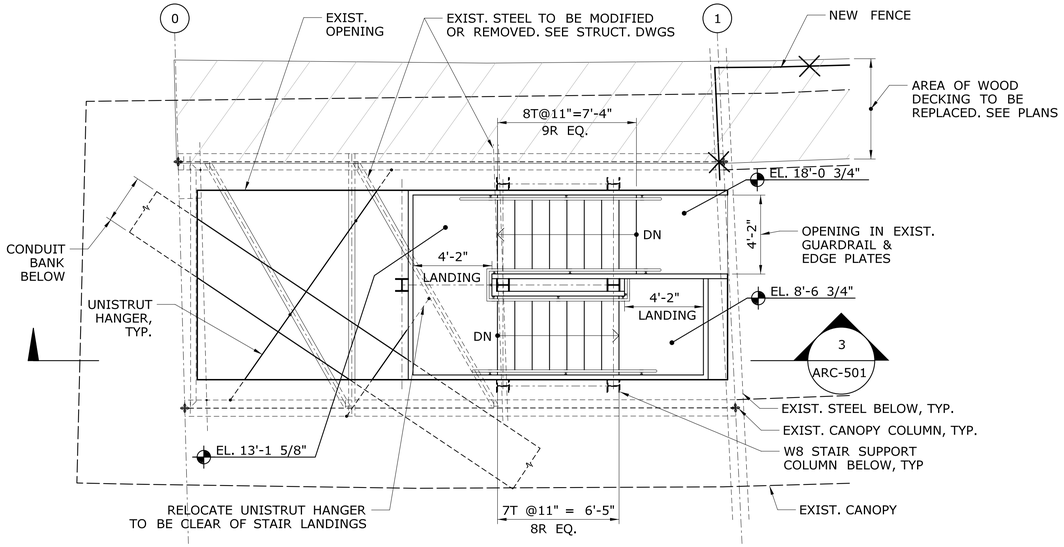

NOTE:
FOR HANDRAIL DIMENTIONS SEE ARC-505.

1 / - STAIR PLAN - UPPER LEVEL

SCALE: 1/4"=1'-0"

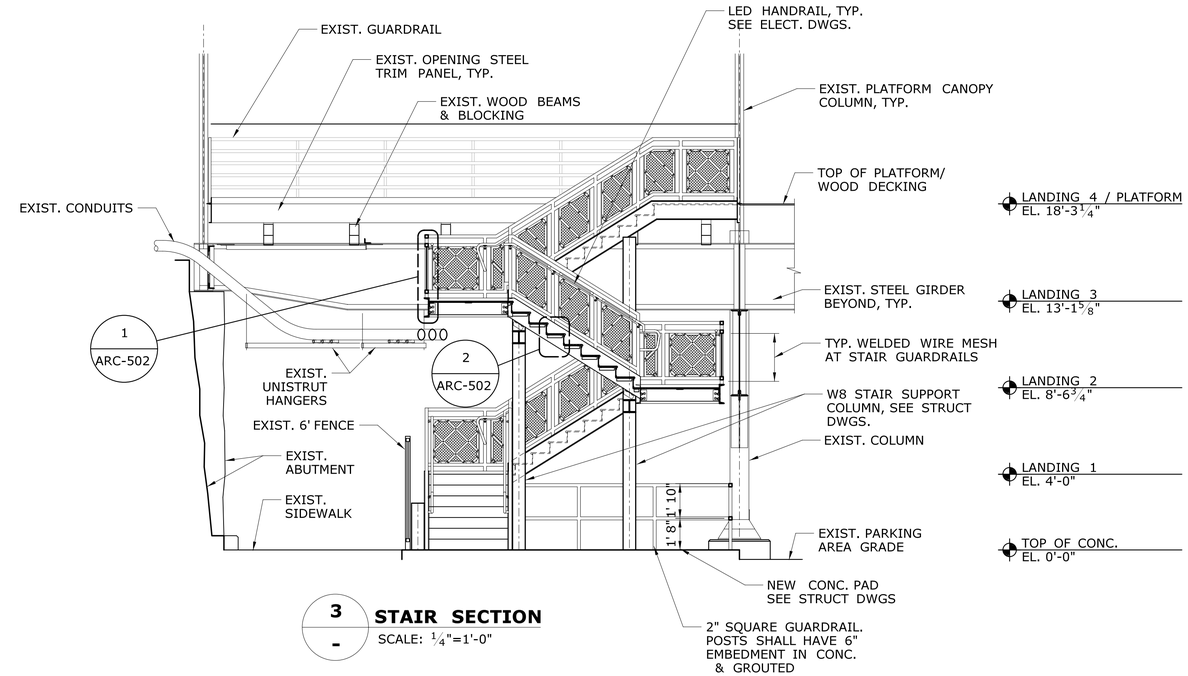

3 / - STAIR SECTION

SCALE: 1/4"=1'-0"

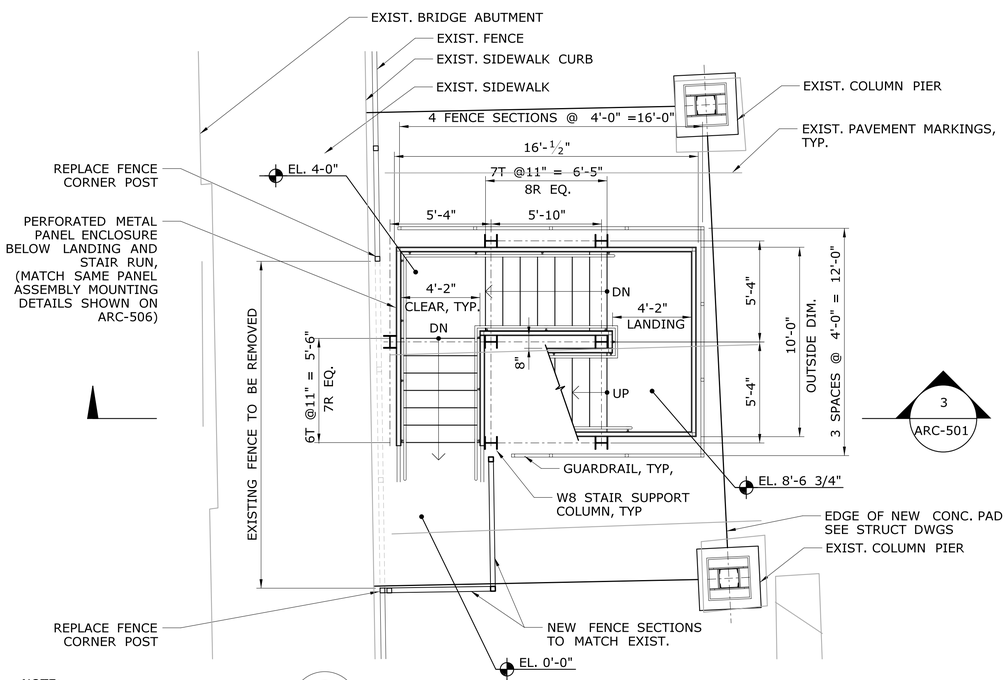

NOTE:
FOR HANDRAIL DIMENTIONS SEE ARC-505.

2 / - STAIR PLAN - LOWER LEVEL

SCALE: 1/4"=1'-0"

NOTE:
1. ALL STEEL FRAMING, GUARDRAILS, ETC. ARE TO BE AESS TYPE AND ARE TO RECEIVE HIGH- PERFORMANCE COATING.

REV.	DATE	REVISION DESCRIPTION	SHEET NO.
-	-	-	-
-	-	-	-
-	-	-	-
-	-	-	-
-	-	-	-
-	-	-	-

THE INFORMATION, INCLUDING ESTIMATED QUANTITIES OF WORK, SHOWN ON THESE SHEETS IS BASED ON LIMITED INVESTIGATIONS BY THE STATE AND IS IN NO WAY WARRANTED TO INDICATE THE CONDITIONS OF ACTUAL QUANTITIES OF WORK WHICH WILL BE REQUIRED.

Plotted Date: 8/19/2014

DESIGNER/DRAFTER: R WRIGHT
CHECKED BY: R BRAREN
SCALE IN FEET
0 SCALE AS NOTED 80
SCALE 1"=40'

STATE OF CONNECTICUT
DEPARTMENT OF TRANSPORTATION

Filename: ...\FA..CGR..CPS..0170-2296..063...05..ARC...501.dgn

SIGNATURE/ BLOCK:
Baker
Michael Baker Engineering Inc.
500 Enterprise Drive
Suite 2B
Rocky Hill, CT 06067

STATE OF CONNECTICUT DEPARTMENT OF TRANSPORTATION NO. 19079 LICENSED PROFESSIONAL ENGINEER

PROJECT TITLE:
NEW HAVEN - HARTFORD SPRINGFIELD RAIL CORRIDOR

TOWN: HARTFORD

DRAWING TITLE:
EGRESS STAIR DETAILS - 1

PROJECT NO. 170-3261
DRAWING NO. ARC-501
SHEET NO. 11.10

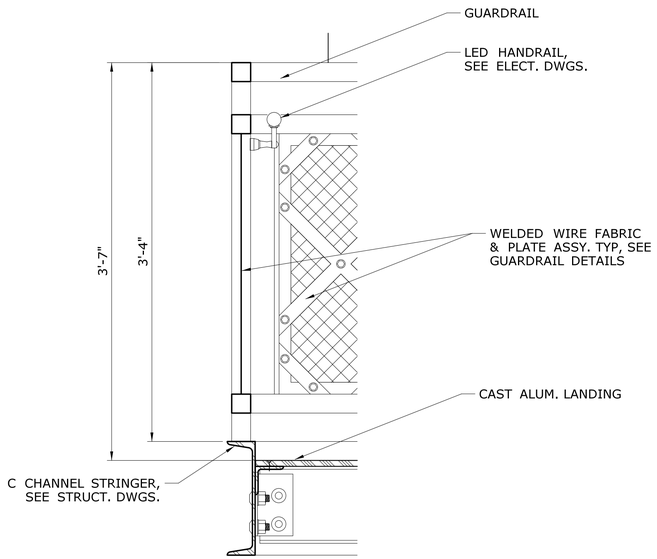

1 ARC-501 **LANDING & STRINGER DETAIL**
SCALE: 1½" =1'-0"

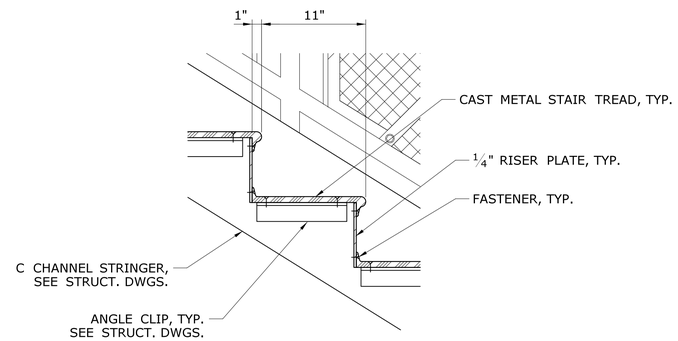

2 ARC-501 **TYP TREAD DETAIL**
SCALE: 1½" =1'-0"

REV.	DATE	REVISION DESCRIPTION	SHEET NO.
-	-	-	-
-	-	-	-
-	-	-	-
-	-	-	-
-	-	-	-
-	-	-	-

THE INFORMATION, INCLUDING ESTIMATED QUANTITIES OF WORK, SHOWN ON THESE SHEETS IS BASED ON LIMITED INVESTIGATIONS BY THE STATE AND IS IN NO WAY WARRANTED TO INDICATE THE CONDITIONS OF ACTUAL QUANTITIES OF WORK WHICH WILL BE REQUIRED.

Plotted Date: 8/19/2014

DESIGNER/DRAFTER: **R WRIGHT**
CHECKED BY: **R BRAREN**
SCALE AS NOTED

STATE OF CONNECTICUT
DEPARTMENT OF TRANSPORTATION

Filename: ...\FA..CGR..CPS..0170-2296..063...05..ARC...502.dgn

SIGNATURE/BLOCK:
Baker
Michael Baker Engineering Inc.
500 Enterprise Drive
Suite 2B
Rocky Hill, CT 06067

STATE OF CONNECTICUT
SCOTT M. DELSEMBRE
NO. 15070
LICENSED
PROFESSIONAL ENGINEER

PROJECT TITLE:
NEW HAVEN - HARTFORD SPRINGFIELD RAIL CORRIDOR

TOWN: **HARTFORD**

DRAWING TITLE: **EGRESS STAIR DETAILS - 2**

PROJECT NO. **170-3261**
DRAWING NO. **ARC-502**
SHEET NO. **11.11**

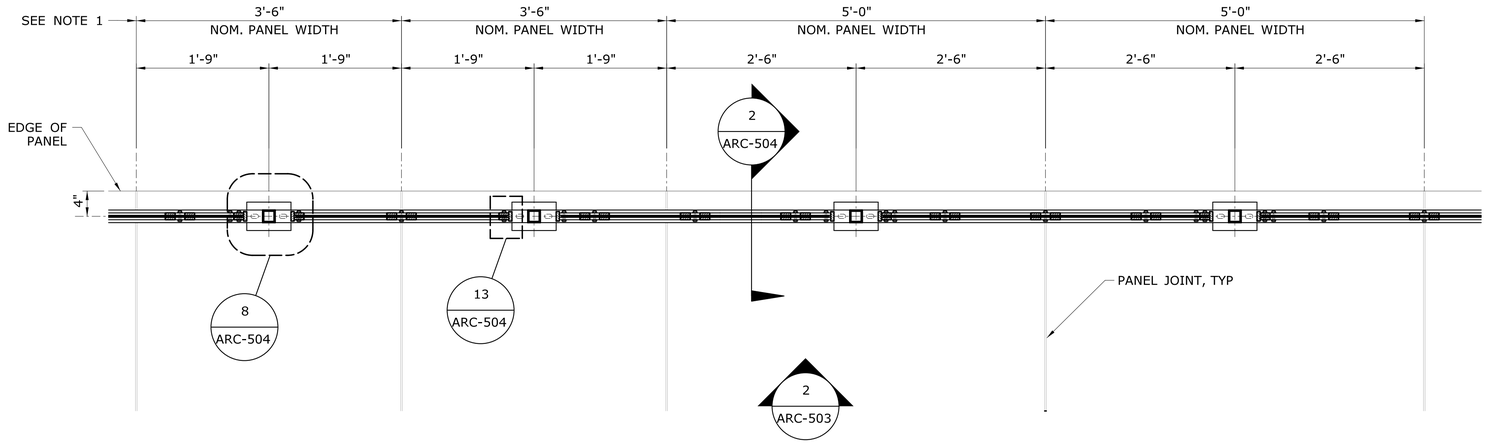

1 ARC-503 TYPICAL GUARDRAIL POST SPACING PER PLATFORM & RAMP PANEL SIZE - PLAN
SCALE: 1" =1'-0"

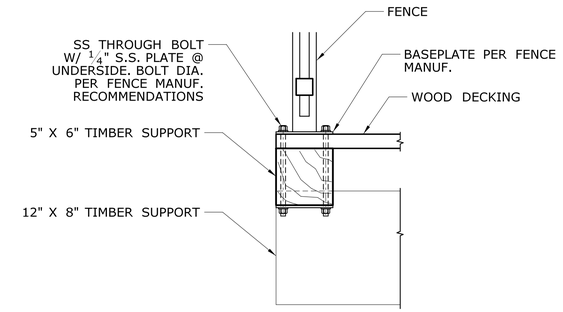

3 ARC-301 FENCE BASEPLATE - TYP
SCALE: 1 1/2" =1'-0"

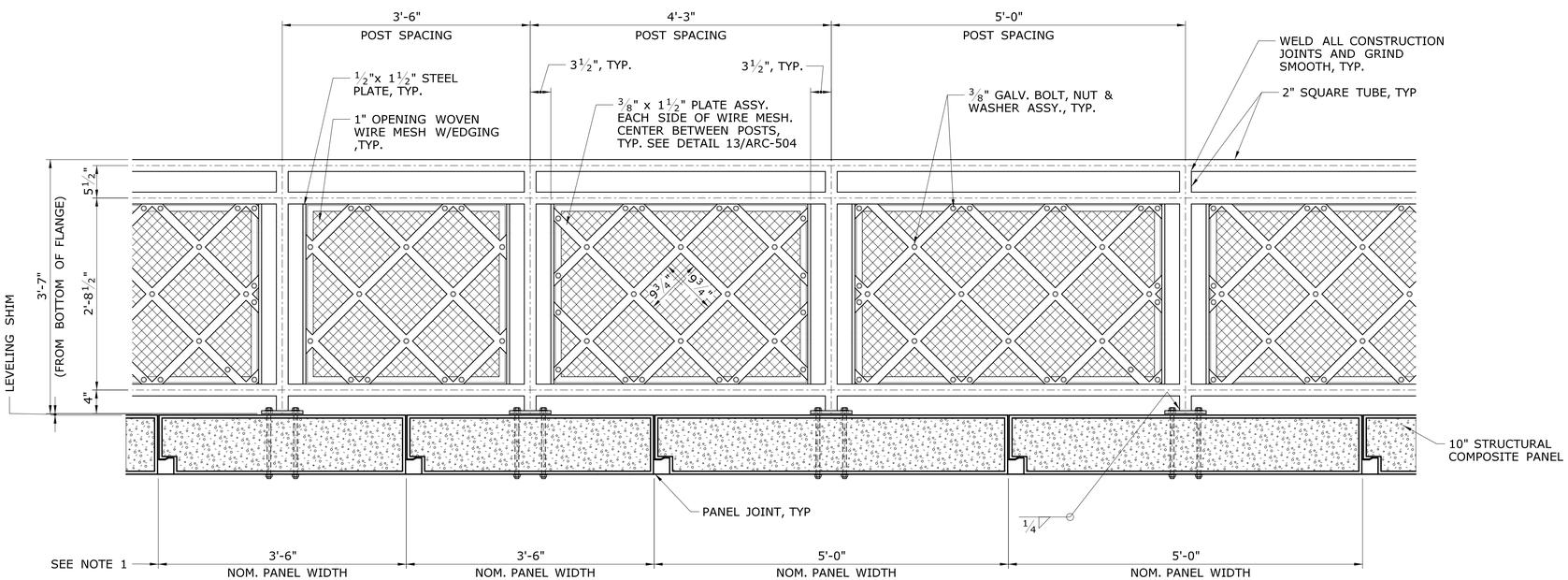

2 ARC-503 TYPICAL GUARDRAIL POST SPACING PER PLATFORM & RAMP PANEL SIZE - ELEVATION
SCALE: 1" =1'-0"

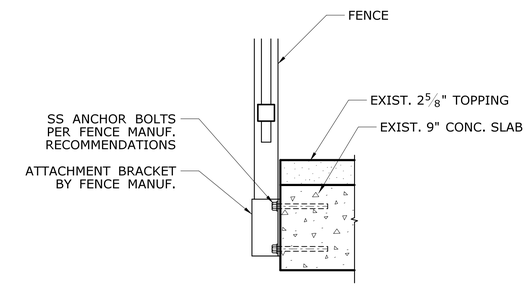

4 ARC-503 FENCE BRACKET - TYP
SCALE: 1" =1'-0"

NOTES:

1. SEE PLATFORM PLAN DRAWING ARC-101 FOR PROPOSED PLATFORM & RAMP PANEL LAYOUT.

REV.	DATE	REVISION DESCRIPTION	SHEET NO.
-	-	-	-
-	-	-	-
-	-	-	-
-	-	-	-
-	-	-	-
-	-	-	-

THE INFORMATION, INCLUDING ESTIMATED QUANTITIES OF WORK, SHOWN ON THESE SHEETS IS BASED ON LIMITED INVESTIGATIONS BY THE STATE AND IS IN NO WAY WARRANTED TO INDICATE THE CONDITIONS OF ACTUAL QUANTITIES OF WORK WHICH WILL BE REQUIRED.

Plotted Date: 8/19/2014

DESIGNER/DRAFTER: R WRIGHT
CHECKED BY: R BRAREN
SCALE AS NOTED

STATE OF CONNECTICUT
DEPARTMENT OF TRANSPORTATION

Filename: ...\FA..CGR..CPS..0170-2296..063...05..ARC...503.dgn

SIGNATURE/BLOCK:
Baker
Michael Baker Engineering Inc.
500 Enterprise Drive
Suite 2B
Rocky Hill, CT 06067

STATE OF CONNECTICUT DEPARTMENT OF DESIGN LICENSED PROFESSIONAL ENGINEER NO. 19079

PROJECT TITLE:
NEW HAVEN - HARTFORD SPRINGFIELD RAIL CORRIDOR

TOWN: HARTFORD

DRAWING TITLE: GUARDRAIL DETAILS - 1

PROJECT NO. 170-3261
DRAWING NO. ARC-503
SHEET NO. 11.12

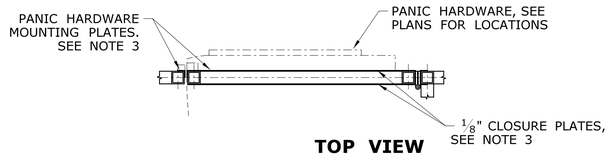

TOP VIEW

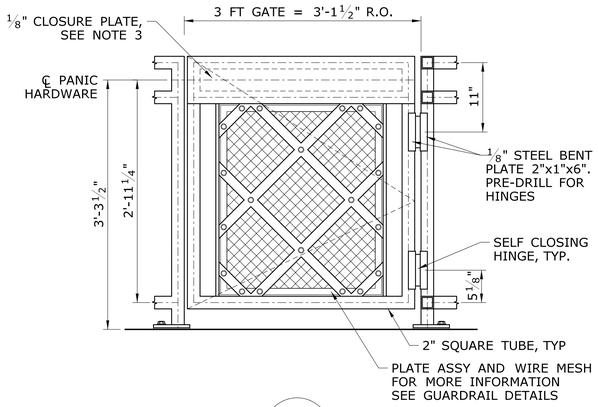

1 ARC-521 GATE DETAIL
SCALE: 1" =1'-0"

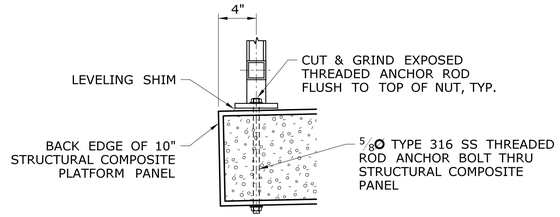

2 ARC-504 PLATFORM MOUNTING
SCALE: 1 1/2" =1'-0"

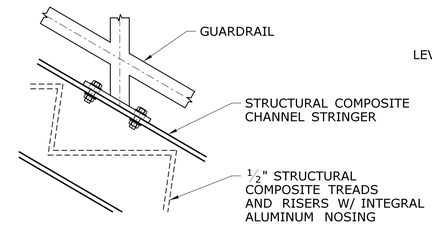

3 ARC-504 STAIR STRINGER MOUNTING
SCALE: 1 1/2" =1'-0"

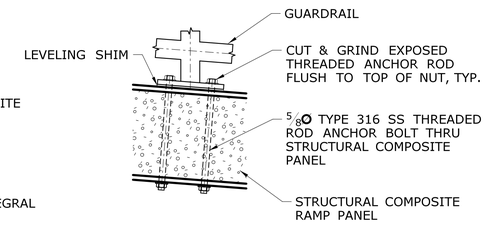

4 ARC-504 RAMP MOUNTING
SCALE: 1 1/2" =1'-0"

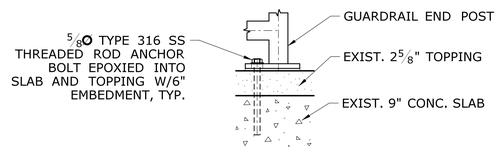

5 ARC-504 MOUNTING @ CONCRETE DECK
SCALE: 1 1/2" =1'-0"

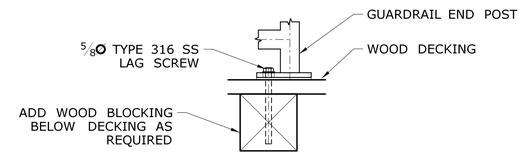

6 ARC-504 MOUNTING @ WOOD DECK
SCALE: 1 1/2" =1'-0"

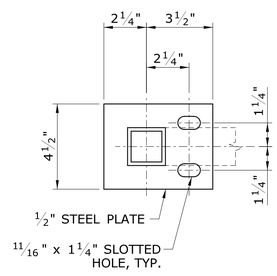

7 ARC-504 END POST BASEPLATE
SCALE: 3" =1'-0"

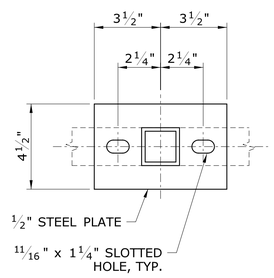

8 ARC-504 STD. POST BASEPLATE
SCALE: 3" =1'-0"

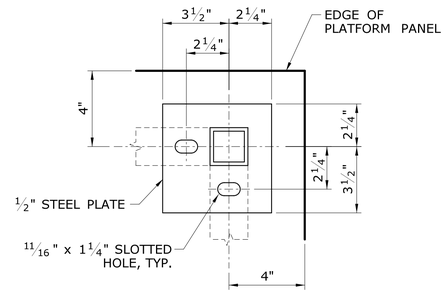

9 ARC-504 CORNER POST BASEPLATE
SCALE: 3" =1'-0"

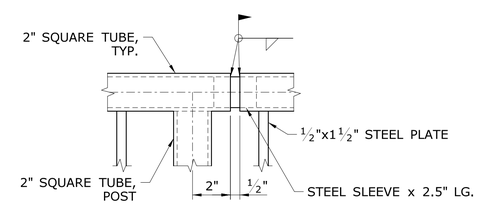

10 ARC-504 FIELD SPLICE DETAIL
SCALE: 3" =1'-0"

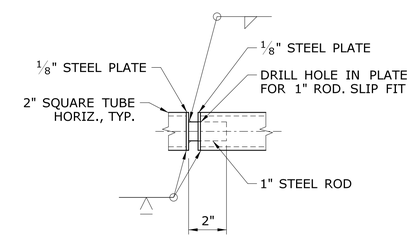

11 ARC-504 EXP. JOINT DETAIL
SCALE: 3" =1'-0"

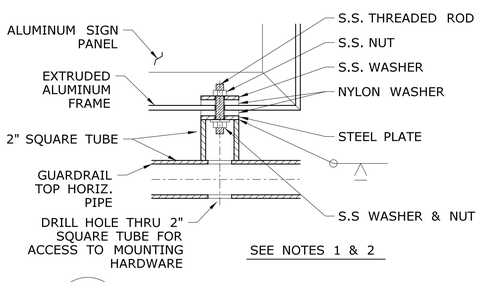

12 ARC-504 SIGN MOUNTING DETAIL
SCALE: 3" =1'-0"

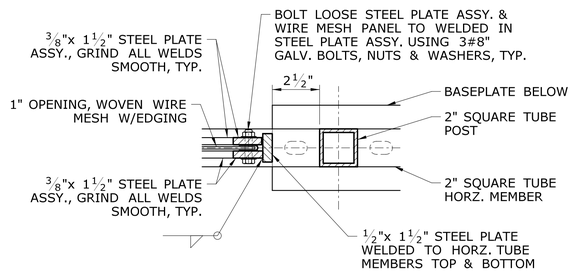

13 ARC-503 PLATE/WIRE MESH PANEL DETAIL
SCALE: 3" =1'-0"

NOTES:

1. G.C. TO COORDINATE REQUIRED LOCATIONS OF SIGN PANEL CONNECTIONS WITH SIGNAGE DRAWINGS.
2. GUARDRAIL MANUFACTURER TO PROVIDE SIGN PANEL CONNECTIONS 6" TO CENTERLINE FROM END OF SIGN PANELS AND NO GREATER THAN 2'-4" O.C. APART
3. G.C. TO PROVIDE AND COORDINATE ALL NECESSARY MOUNTING PLATES FOR THE INSTALLATION OF PANIC HARDWARE. PROVIDE CLOSURE PLATES WHERE SHOWN AND COORDINATE SIZES WITH PANIC HARDWARE.

REV.	DATE	REVISION DESCRIPTION	SHEET NO.
-	-	-	-
-	-	-	-
-	-	-	-
-	-	-	-
-	-	-	-
-	-	-	-

THE INFORMATION, INCLUDING ESTIMATED QUANTITIES OF WORK, SHOWN ON THESE SHEETS IS BASED ON LIMITED INVESTIGATIONS BY THE STATE AND IS IN NO WAY WARRANTED TO INDICATE THE CONDITIONS OF ACTUAL QUANTITIES OF WORK WHICH WILL BE REQUIRED.

Plotted Date: 8/19/2014

DESIGNER/DRAFTER: R WRIGHT
CHECKED BY: R BRAREN
SCALE AS NOTED

STATE OF CONNECTICUT
DEPARTMENT OF TRANSPORTATION

Filename: ...\FA..CGR..CPS..0170-2296..063...05..ARC...504.dgn

SIGNATURE/BLOCK: Baker
Michael Baker Engineering Inc.
500 Enterprise Drive
Suite 2B
Rocky Hill, CT 06067

PROJECT TITLE:
NEW HAVEN - HARTFORD SPRINGFIELD RAIL CORRIDOR

TOWN: HARTFORD

DRAWING TITLE: GUARDRAIL DETAILS - 2

PROJECT NO. 170-3261
DRAWING NO. ARC-504
SHEET NO. 11.13

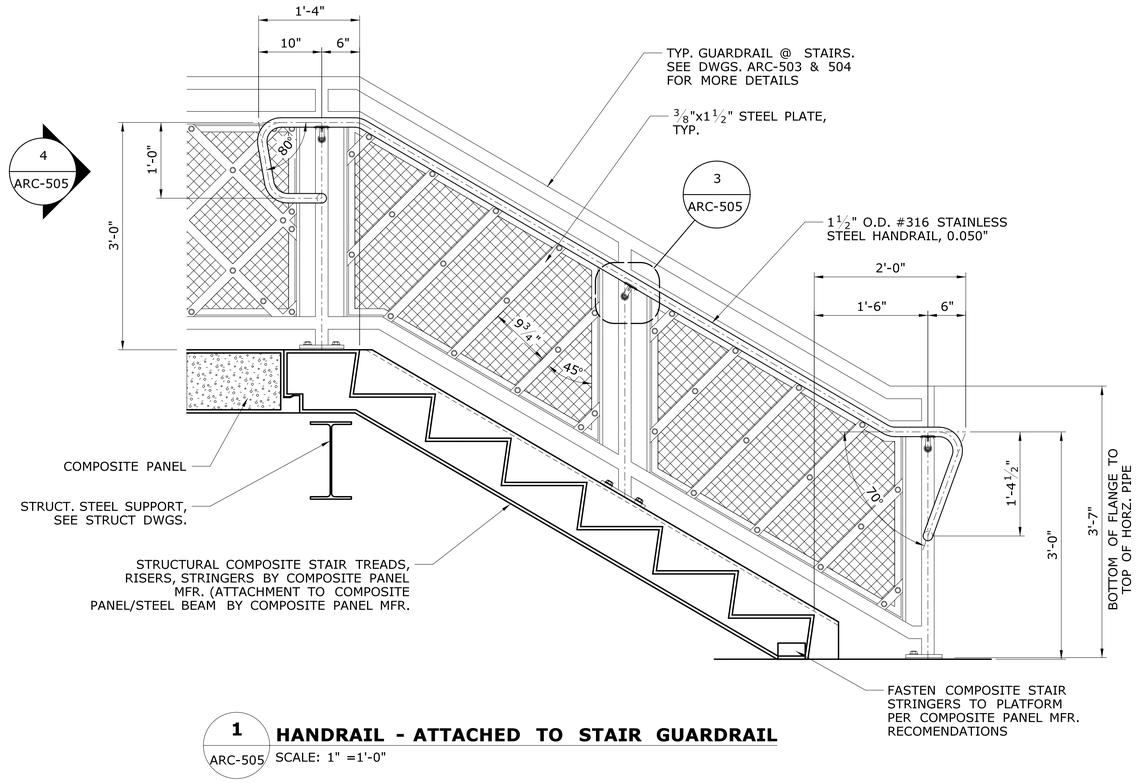

1 ARC-505 HANDRAIL - ATTACHED TO STAIR GUARDRAIL
SCALE: 1" =1'-0"

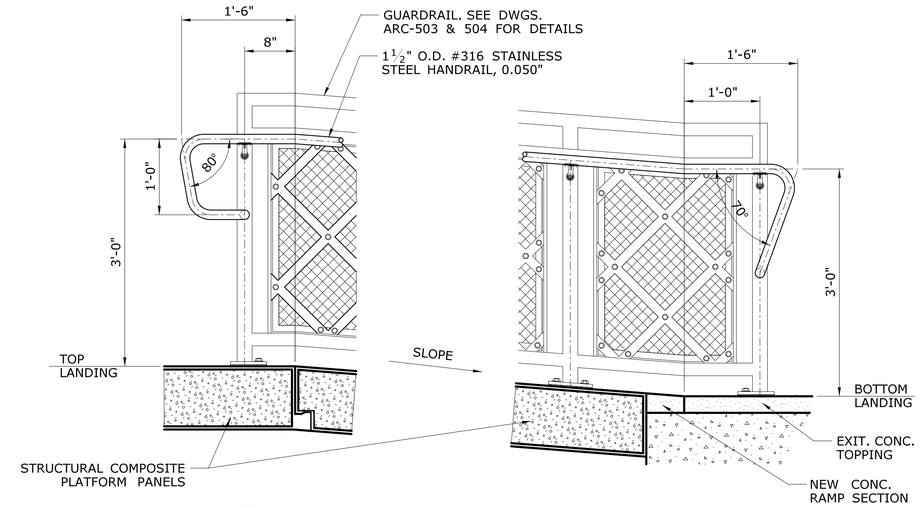

2 ARC-505 HANDRAIL - ATTACHED TO RAMP GUARDRAIL
SCALE: 1" =1'-0"

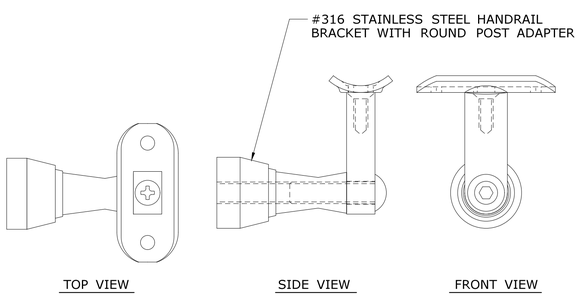

3 ARC-505 MOUNTING BRACKET DETAIL
SCALE: 6" =1'-0"

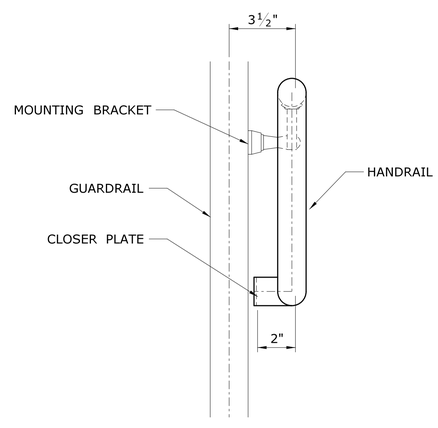

4 ARC-505 HANDRAIL ATTACHMENT DETAIL
SCALE: 1 1/2" =1'-0"

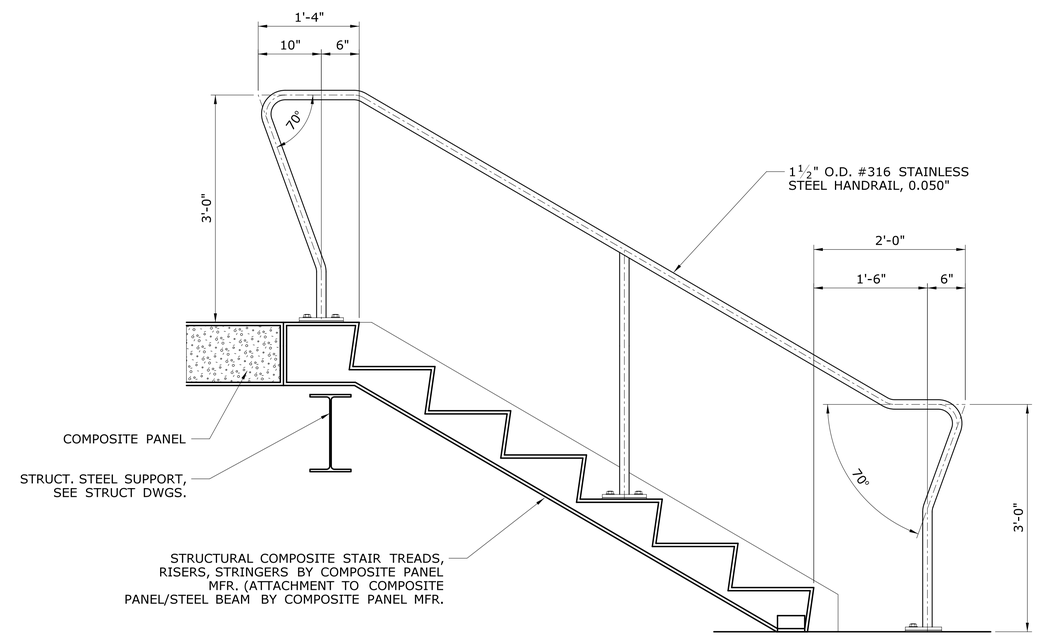

5 ARC-505 HANDRAIL - FREE STANDING
SCALE: 1" =1'-0"

NOTES:
1. THE CLEAR SPACE BETWEEN HANDRAILS AND ALL WALLS, STRUCTURES, AND GUARDRAILS SHALL BE 1 1/2" MIN.

REV.	DATE	REVISION DESCRIPTION	SHEET NO.
-	-	-	-
-	-	-	-
-	-	-	-
-	-	-	-
-	-	-	-
-	-	-	-

THE INFORMATION, INCLUDING ESTIMATED QUANTITIES OF WORK, SHOWN ON THESE SHEETS IS BASED ON LIMITED INVESTIGATIONS BY THE STATE AND IS IN NO WAY WARRANTED TO INDICATE THE CONDITIONS OF ACTUAL QUANTITIES OF WORK WHICH WILL BE REQUIRED.

Plotted Date: 8/19/2014

DESIGNER/DRAFTER: R WRIGHT
CHECKED BY: R BRAREN
SCALE AS NOTED

STATE OF CONNECTICUT
DEPARTMENT OF TRANSPORTATION

Filename: ...\FA..CGR..CPS..0170-2296..063...05..ARC...505.dgn

SIGNATURE/BLOCK:
Baker
Michael Baker Engineering Inc.
500 Enterprise Drive
Suite 2B
Rocky Hill, CT 06067

PROJECT TITLE:
NEW HAVEN - HARTFORD SPRINGFIELD RAIL CORRIDOR

TOWN: HARTFORD

DRAWING TITLE: HANDRAIL DETAILS

PROJECT NO. 170-3261
DRAWING NO. ARC-505
SHEET NO. 11.14

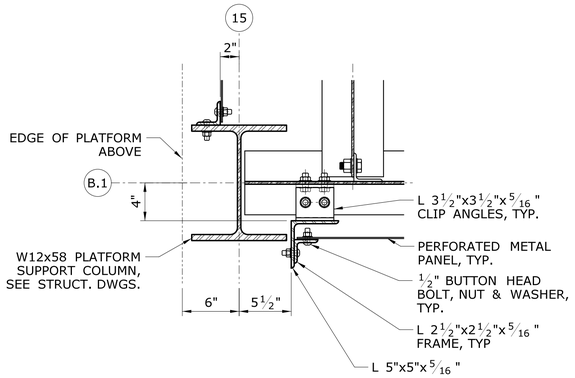

1 ARC-301 **PANEL ASSY. MOUNTING DETAIL - PLAN**
SCALE: 1½" =1'-0"

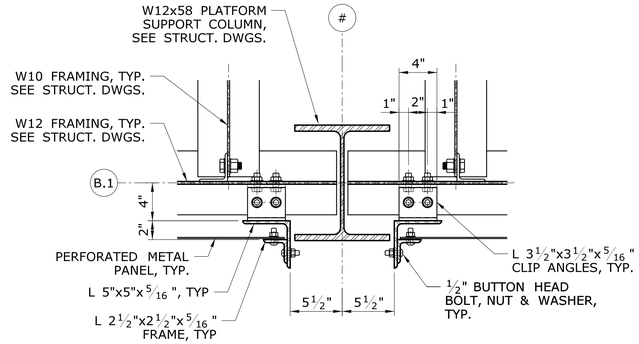

2 ARC-301 **PANEL ASSY. MOUNTING DETAIL - PLAN**
SCALE: 1½" =1'-0"

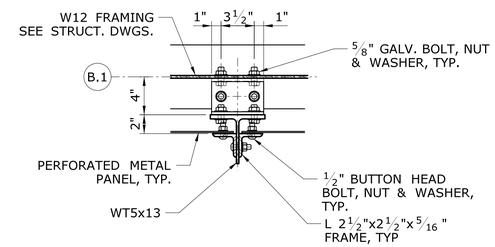

3 ARC-301 **PANEL ASSY. MOUNTING DETAIL - PLAN**
SCALE: 1½" =1'-0"

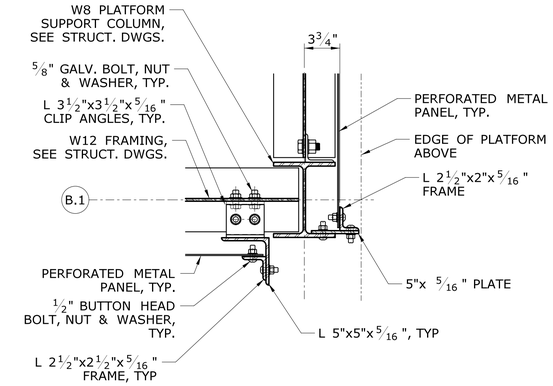

4 ARC-301 **PANEL ASSY. MOUNTING DETAIL - PLAN**
SCALE: 1½" =1'-0"

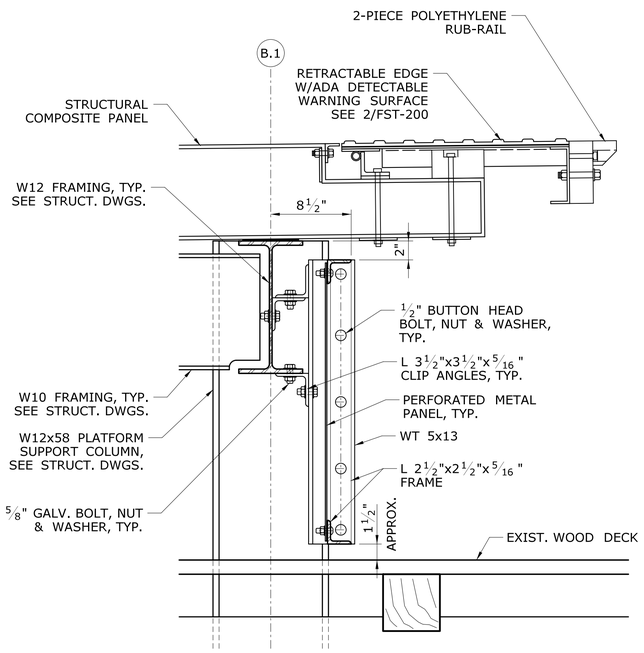

NOTE: FRONT OF PLATFORM @ WT ATTACHMENT LOCATION SHOWN. OTHERS ATTACHMENTS AND LOCATIONS SIMILAR.

5 ARC-301 **PANEL ASSY. - SECTION**
SCALE: 1½" =1'-0"

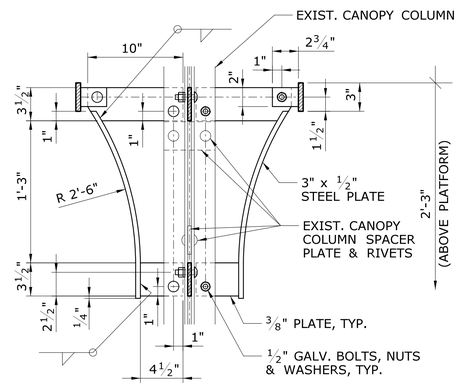

SECTION

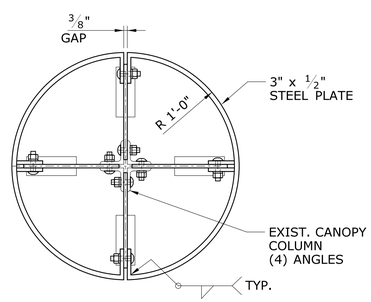

PLAN

6 ARC-301 **CANE DETECTION DETAILS**
SCALE: 1½" =1'-0"

NOTE:
CANE DETECTION ASSEMBLY TO BE PROVIDED AT ALL CANOPY COLUMNS PENETRATING HIGH-LEVEL PLATFORM.

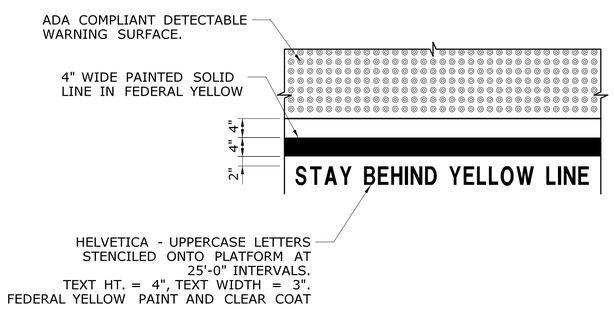

7 ARC-101 **WARNING MARKING DETAIL**
SCALE: ¾" =1'-0"

NOTE:
1. ALL MISC. STEEL FRAMING ARE TO BE AESS TYPE AND ARE TO RECEIVE HIGH- PERFORMANCE COATING.

REV.	DATE	REVISION DESCRIPTION	SHEET NO.
-	-	-	-
-	-	-	-
-	-	-	-
-	-	-	-
-	-	-	-
-	-	-	-

THE INFORMATION, INCLUDING ESTIMATED QUANTITIES OF WORK, SHOWN ON THESE SHEETS IS BASED ON LIMITED INVESTIGATIONS BY THE STATE AND IS IN NO WAY WARRANTED TO INDICATE THE CONDITIONS OF ACTUAL QUANTITIES OF WORK WHICH WILL BE REQUIRED.

Plotted Date: 8/19/2014

DESIGNER/DRAFTER: **R WRIGHT**
CHECKED BY: **R BRAREN**
SCALE AS NOTED

STATE OF CONNECTICUT
DEPARTMENT OF TRANSPORTATION

Filename: ...\FA..CGR..CPS..0170-2296..063...05..ARC...506.dgn

SIGNATURE/BLOCK:
Baker
Michael Baker Engineering Inc.
500 Enterprise Drive
Suite 2B
Rocky Hill, CT 06067

PROJECT TITLE:
NEW HAVEN - HARTFORD SPRINGFIELD RAIL CORRIDOR

TOWN: **HARTFORD**

DRAWING TITLE: **MISCELLANEOUS DETAILS**

PROJECT NO. **170-3261**
DRAWING NO. **ARC-506**
SHEET NO. **11.15**

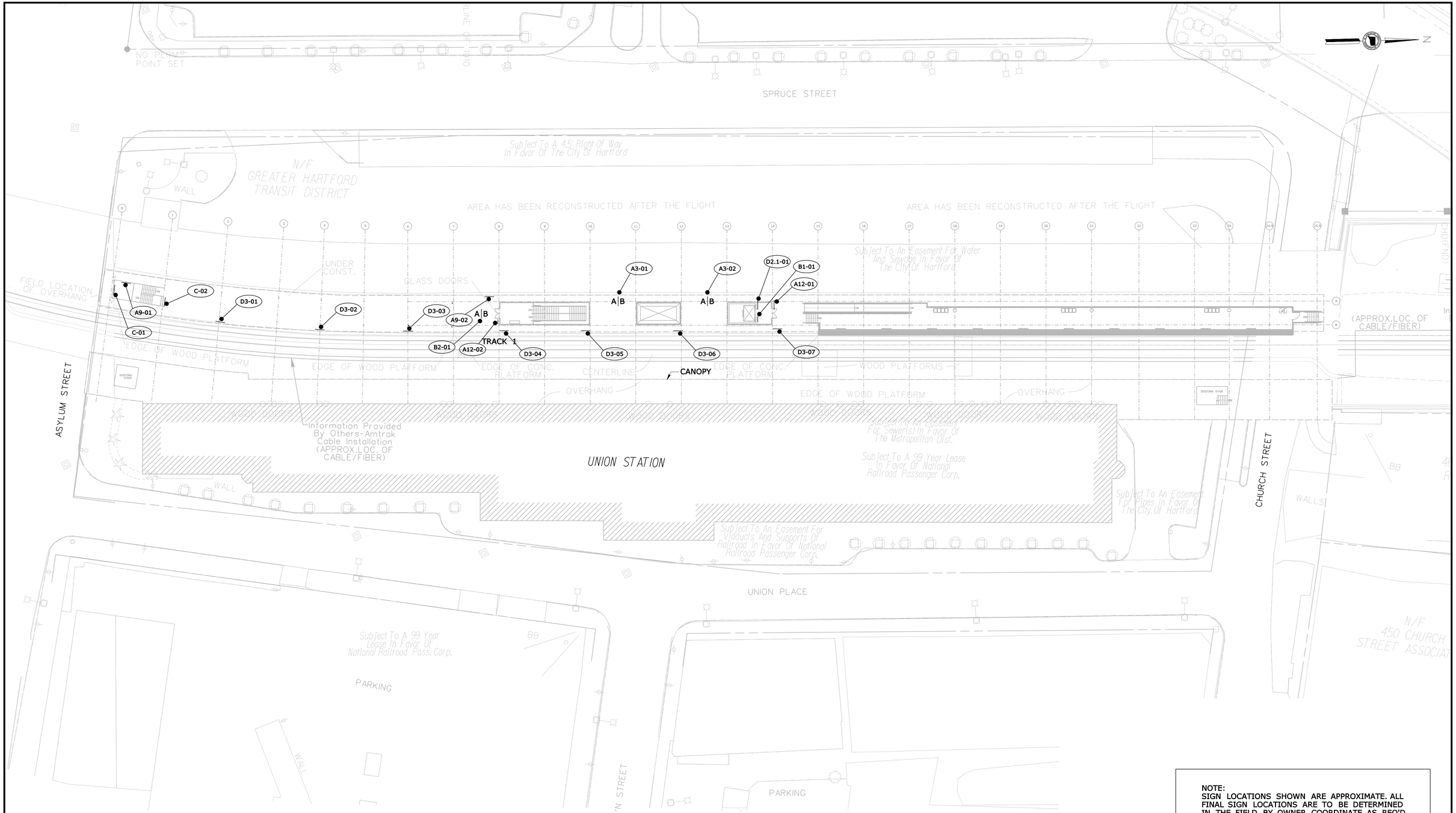

NOTE:
SIGN LOCATIONS SHOWN ARE APPROXIMATE. ALL FINAL SIGN LOCATIONS ARE TO BE DETERMINED IN THE FIELD BY OWNER, COORDINATE AS REQ'D.

1 / - **SITE SIGN LOCATION PLAN**
SCALE: 1"=25'-0"

REV.	DATE	REVISION DESCRIPTION	SHEET NO.

THE INFORMATION, INCLUDING ESTIMATED QUANTITIES OF WORK, SHOWN ON THESE SHEETS IS BASED ON LIMITED INVESTIGATIONS BY THE STATE AND IS IN NO WAY WARRANTED TO INDICATE THE CONDITIONS OF ACTUAL QUANTITIES OF WORK WHICH WILL BE REQUIRED.

Plotted Date: 8/14/2014

DESIGNER/DRAFTER: **PB**
CHECKED BY: **M. RUMNEY**

STATE OF CONNECTICUT
DEPARTMENT OF TRANSPORTATION

Filename: ...\FA..CGR..CPS..0170-2296..063...05..SCM...001.dgn

SIGNATURE/BLOCK:
Baker
Michael Baker Engineering Inc.
500 Enterprise Drive
Suite 2B
Rocky Hill, CT 06067
STATE OF CONNECTICUT COUNTY OF RESIDENCE NO. 19078 LICENSED PROFESSIONAL ENGINEER

PROJECT TITLE:
NEW HAVEN - HARTFORD SPRINGFIELD RAIL CORRIDOR

TOWN: **HARTFORD**

DRAWING TITLE: **SITE SIGN LOCATION PLAN**

PROJECT NO. **170-3261**
DRAWING NO. **SGN-001**
SHEET NO. **11.16**

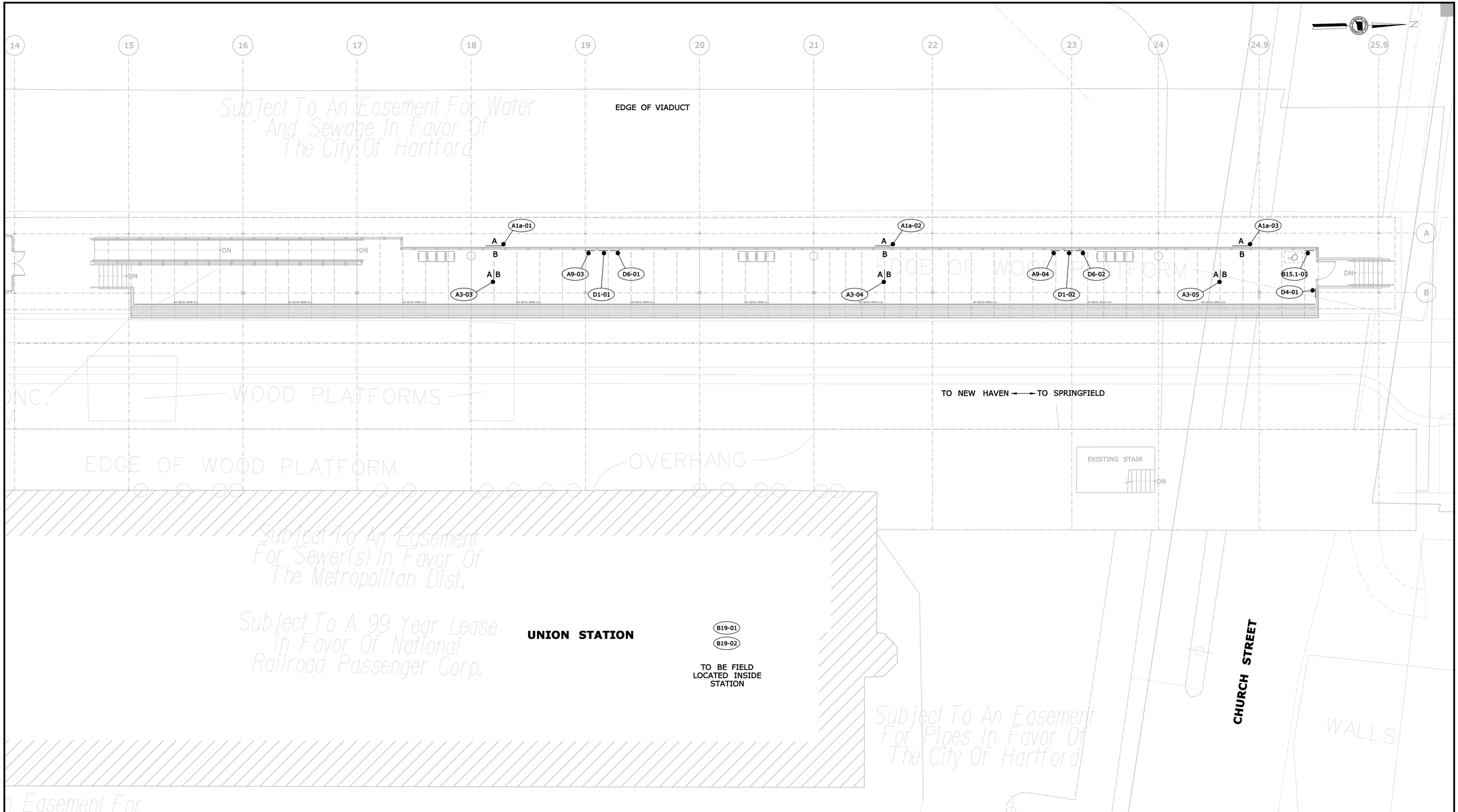

1 - **PLATFORM SIGN LOCATION PLAN**

SCALE: 1"=10'-0"

REV.	DATE	REVISION DESCRIPTION	SHEET NO.
-	-	-	-
-	-	-	-
-	-	-	-
-	-	-	-
-	-	-	-
-	-	-	-

THE INFORMATION, INCLUDING ESTIMATED QUANTITIES OF WORK, SHOWN ON THESE SHEETS IS BASED ON LIMITED INVESTIGATIONS BY THE STATE AND IS IN NO WAY WARRANTED TO INDICATE THE CONDITIONS OF ACTUAL QUANTITIES OF WORK WHICH WILL BE REQUIRED.

Plotted Date: 8/14/2014

DESIGNER/DRAFTER: **PB**

CHECKED BY: **M RUMNEY**

SCALE AS NOTED

STATE OF CONNECTICUT
DEPARTMENT OF TRANSPORTATION

Filename: ...\FA..CGR..CPS..0170-2296..063...05..SCM...002.dgn

SIGNATURE/BLOCK:

Baker

Michael Baker Engineering Inc.
500 Enterprise Drive
Suite 2B
Rocky Hill, CT 06067

STATE OF CONNECTICUT — WITH RELEASE — No. 19079 — LICENSED PROFESSIONAL ENGINEER

PROJECT TITLE:

NEW HAVEN - HARTFORD SPRINGFIELD RAIL CORRIDOR

TOWN: **HARTFORD**

DRAWING TITLE: **PLATFORM SIGN LOCATION PLAN**

PROJECT NO. **170-3261**

DRAWING NO. **SGN-002**

SHEET NO. **11.17**

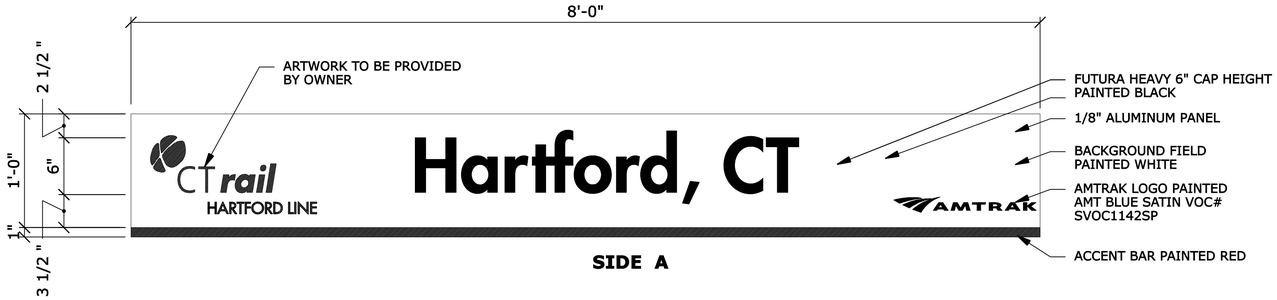

SIDE A

SIDE B

SIGN TYPE A1a **BRANDED CITY IDENTIFIER**

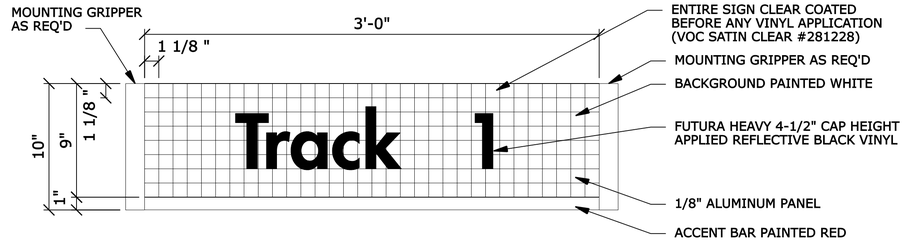

SIGN TYPE A3 **TRACK IDENTIFIER**

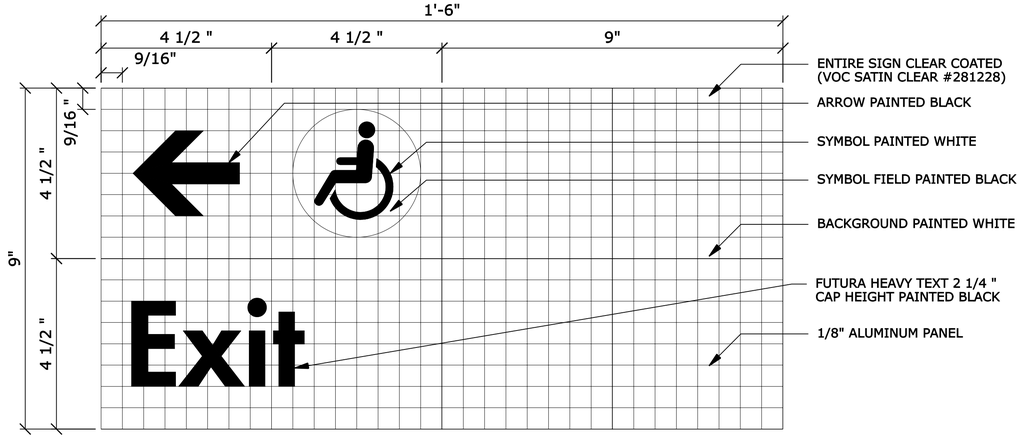

SIGN TYPE A9 **DIRECTIONAL STACKED**

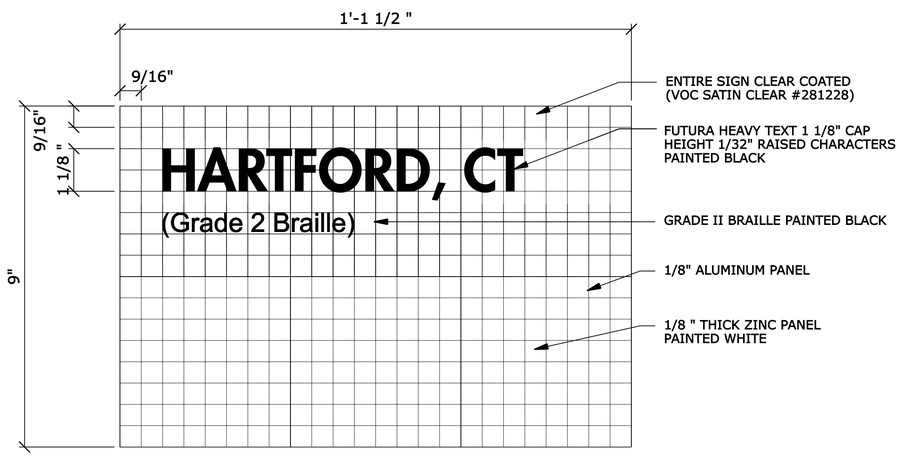

SIGN TYPE A12 **ADA CITY IDENTIFIER**

REV.	DATE	REVISION DESCRIPTION	SHEET NO.
-	-	-	-
-	-	-	-
-	-	-	-
-	-	-	-
-	-	-	-
-	-	-	-

THE INFORMATION, INCLUDING ESTIMATED QUANTITIES OF WORK, SHOWN ON THESE SHEETS IS BASED ON LIMITED INVESTIGATIONS BY THE STATE AND IS IN NO WAY WARRANTED TO INDICATE THE CONDITIONS OF ACTUAL QUANTITIES OF WORK WHICH WILL BE REQUIRED.

Plotted Date: 8/14/2014

DESIGNER/DRAFTER: PB
CHECKED BY: M. RUMNEY
NOT TO SCALE

STATE OF CONNECTICUT
DEPARTMENT OF TRANSPORTATION

Filename: ...\FA..CGR..CPS..0170-2296..063..05..SCM..003.dgn

SIGNATURE/BLOCK: Baker
Michael Baker Engineering Inc.
500 Enterprise Drive
Suite 2B
Rocky Hill, CT 06067

STATE OF CONNECTICUT
NORTH DELEGATION
No. 19079
LICENSED
PROFESSIONAL ENGINEER

PROJECT TITLE:
NEW HAVEN - HARTFORD SPRINGFIELD RAIL CORRIDOR

TOWN: HARTFORD

DRAWING TITLE: PLATFORM SIGN TYPES I

PROJECT NO. 170-3261
DRAWING NO. SGN-003
SHEET NO. 11.18

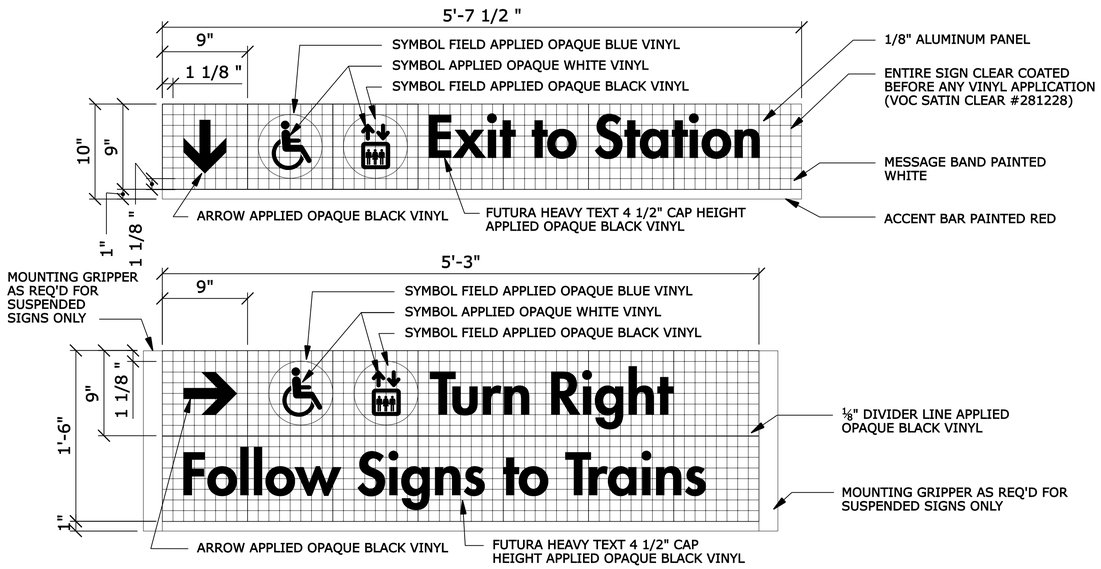

SIGN TYPE B1 / B2 **OVERHEAD DIRECTIONAL**

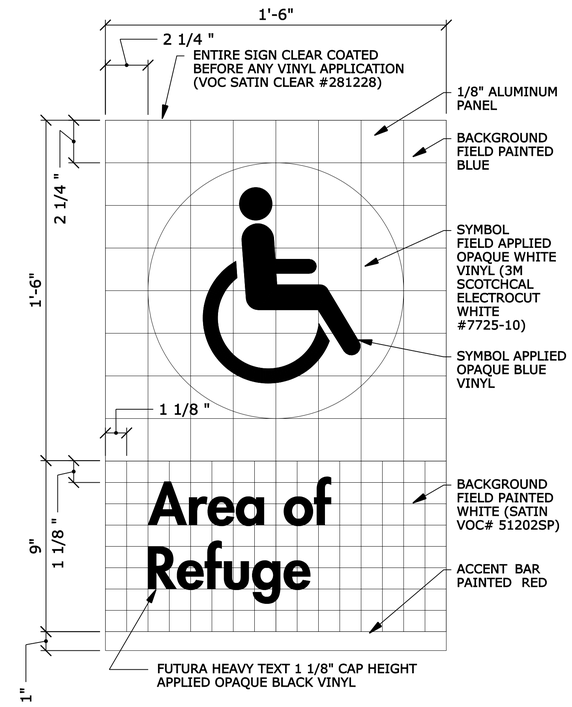

SIGN TYPE B15.1 **AREA OF REFUGE**

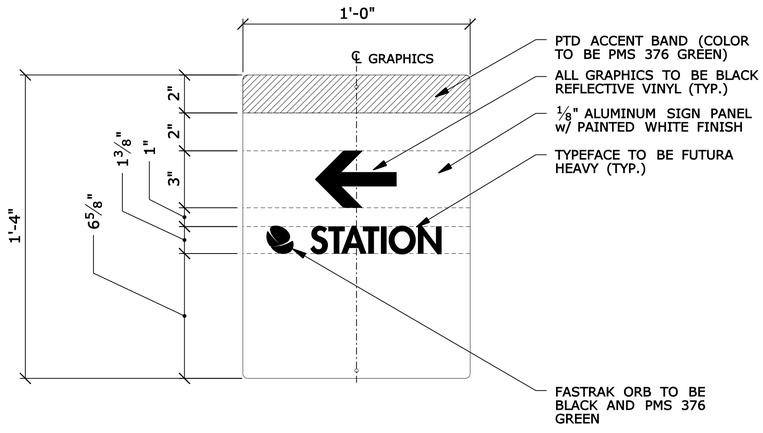

SIGN TYPE C **TRAIL BLAZER DIRECTIONAL SIGN**

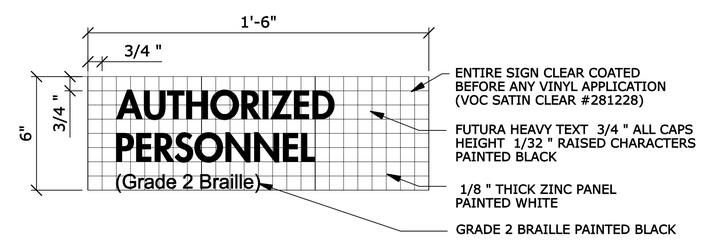

SIGN TYPE B19 **PERMANENT ROOM IDENTIFIER**

REV.	DATE	REVISION DESCRIPTION	SHEET NO.
-	-	-	-
-	-	-	-
-	-	-	-
-	-	-	-
-	-	-	-
-	-	-	-

THE INFORMATION, INCLUDING ESTIMATED QUANTITIES OF WORK, SHOWN ON THESE SHEETS IS BASED ON LIMITED INVESTIGATIONS BY THE STATE AND IS IN NO WAY WARRANTED TO INDICATE THE CONDITIONS OF ACTUAL QUANTITIES OF WORK WHICH WILL BE REQUIRED.

Plotted Date: 8/14/2014

DESIGNER/DRAFTER: **PB**
CHECKED BY: **M. RUMNEY**
NOT TO SCALE

STATE OF CONNECTICUT
DEPARTMENT OF TRANSPORTATION

Filename: ...\FA..CGR..CPS..0170-2296..063..05..SCM..004.dgn

SIGNATURE/BLOCK:
Baker
Michael Baker Engineering Inc.
500 Enterprise Drive
Suite 2B
Rocky Hill, CT 06067

PROJECT TITLE:
NEW HAVEN - HARTFORD SPRINGFIELD RAIL CORRIDOR

TOWN: **HARTFORD**

DRAWING TITLE: **PLATFORM SIGN TYPES II**

PROJECT NO. **170-3261**
DRAWING NO. **SGN-004**
SHEET NO. **11.19**

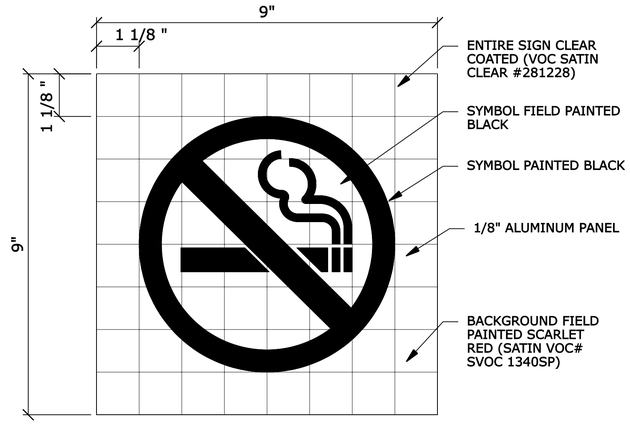

SIGN TYPE D1 **NO SMOKING**

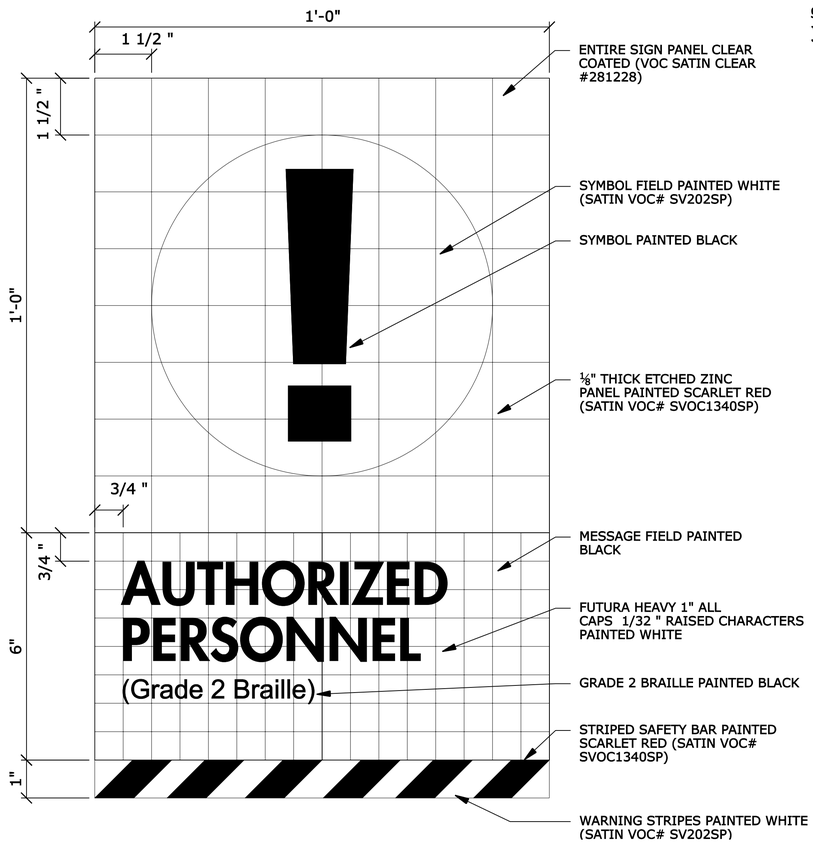

SIGN TYPE D4 **PLATFORM END RESTRICTIVE SIGN**

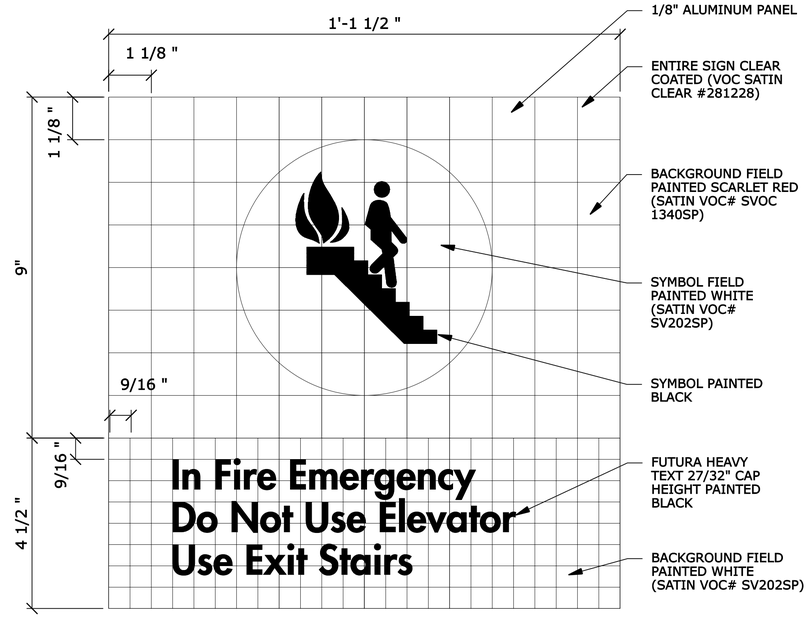

SIGN TYPE D2.1 **IN CASE OF FIRE**

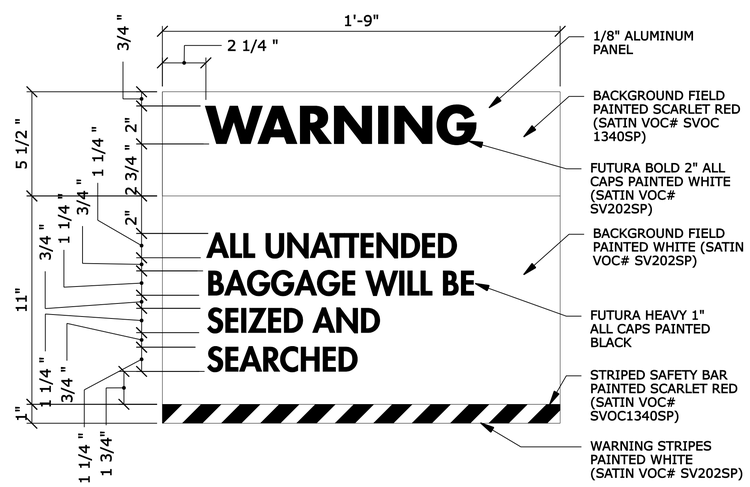

SIGN TYPE D6 **UNATTENDED BAGGAGE**

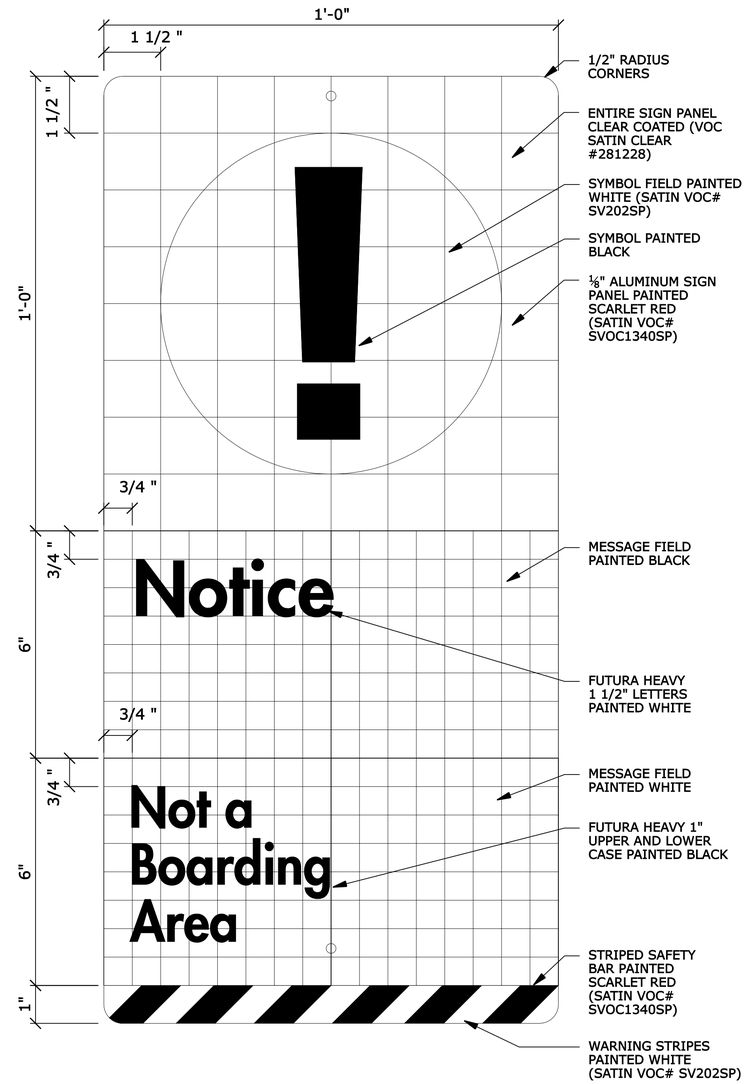

SIGN TYPE D3 **SAFETY SIGN**

REV.	DATE	REVISION DESCRIPTION	SHEET NO.
-	-	-	-
-	-	-	-
-	-	-	-
-	-	-	-
-	-	-	-
-	-	-	-

THE INFORMATION, INCLUDING ESTIMATED QUANTITIES OF WORK, SHOWN ON THESE SHEETS IS BASED ON LIMITED INVESTIGATIONS BY THE STATE AND IS IN NO WAY WARRANTED TO INDICATE THE CONDITIONS OF ACTUAL QUANTITIES OF WORK WHICH WILL BE REQUIRED.

Plotted Date: 8/14/2014

DESIGNER/DRAFTER: **PB**
CHECKED BY: **M. RUMNEY**
NOT TO SCALE

STATE OF CONNECTICUT
DEPARTMENT OF TRANSPORTATION

Filename: ...\FA..CGR..CPS..0170-2296..063..05..SCM..005.dgn

SIGNATURE/BLOCK:
Baker
Michael Baker Engineering Inc.
500 Enterprise Drive
Suite 2B
Rocky Hill, CT 06067

PROJECT TITLE:
NEW HAVEN - HARTFORD SPRINGFIELD RAIL CORRIDOR

TOWN: **HARTFORD**

DRAWING TITLE: **PLATFORM SIGN TYPES III**

PROJECT NO. **170-3261**
DRAWING NO. **SGN-005**
SHEET NO. **11.20**

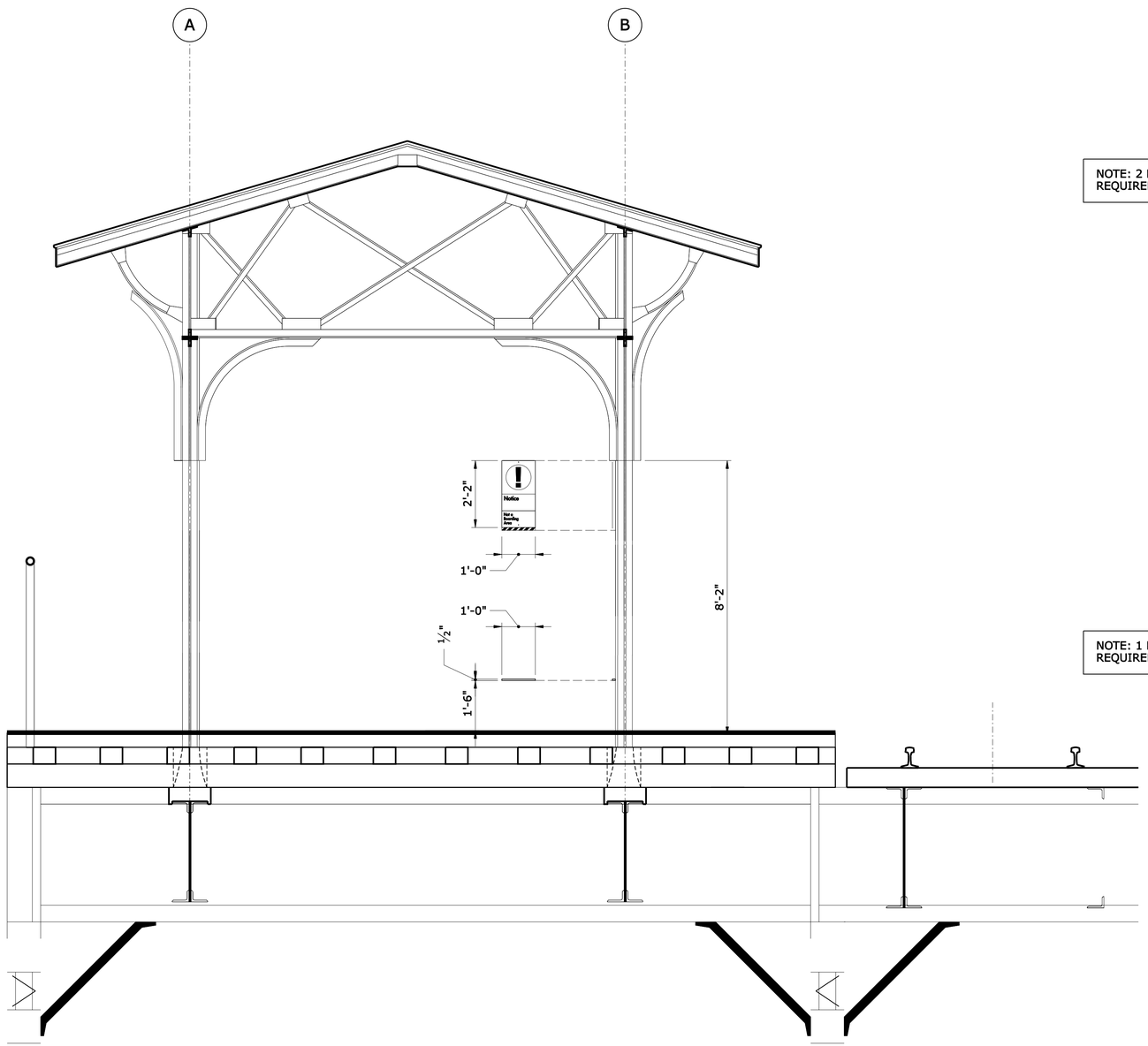

POST MOUNTED SIGN DETAIL
SIGN TYPES D3

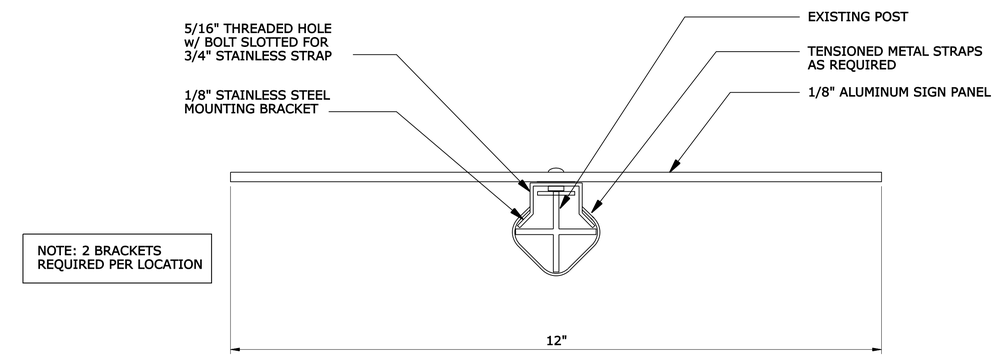

DETAIL 1 **PANEL TO EXISTING POST MOUNTING DETAIL**

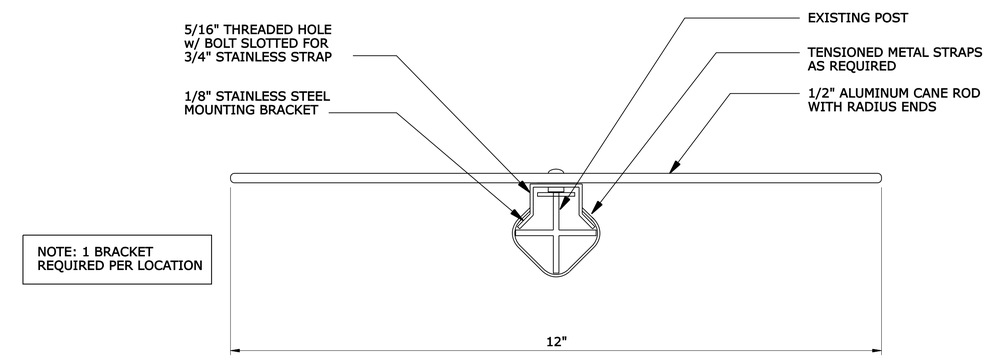

DETAIL 2 **CANE ROD TO EXISTING POST MOUNTING DETAIL**

NOTE: MOUNTING CONDITIONS TO BE COORDINATED & VERIFIED PRIOR TO FABRICATION OF SIGNS

SEE ALSO ARCHITECTURAL AND STRUCTURAL PLANS FOR ADDITIONAL INFORMATION

REV.	DATE	REVISION DESCRIPTION	SHEET NO.

THE INFORMATION, INCLUDING ESTIMATED QUANTITIES OF WORK, SHOWN ON THESE SHEETS IS BASED ON LIMITED INVESTIGATIONS BY THE STATE AND IS IN NO WAY WARRANTED TO INDICATE THE CONDITIONS OF ACTUAL QUANTITIES OF WORK WHICH WILL BE REQUIRED.

Plotted Date: 8/14/2014

DESIGNER/DRAFTER: PB
CHECKED BY: M. RUMNEY
SCALE: AS NOTED

STATE OF CONNECTICUT
DEPARTMENT OF TRANSPORTATION

Filename: ...\FA..CGR..CPS..0170-2296..063..05..SCM..006.dgn

SIGNATURE/BLOCK:
Baker
Michael Baker Engineering Inc.
500 Enterprise Drive
Suite 2B
Rocky Hill, CT 06067

PROJECT TITLE: NEW HAVEN - HARTFORD SPRINGFIELD RAIL CORRIDOR

TOWN: HARTFORD

DRAWING TITLE: SIGN MOUNTING DETAILS I

PROJECT NO. 170-3261
DRAWING NO. SGN-006
SHEET NO. 11.21

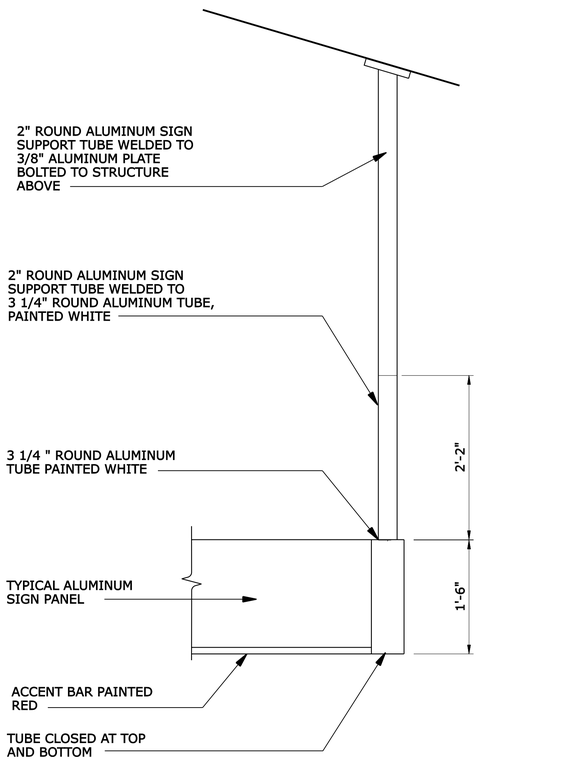

NOTE: ALL SIGN SUPPORT CONNECTIONS TO RECEIVE PAINTED FINISH TO MATCH CANOPY FRAMING

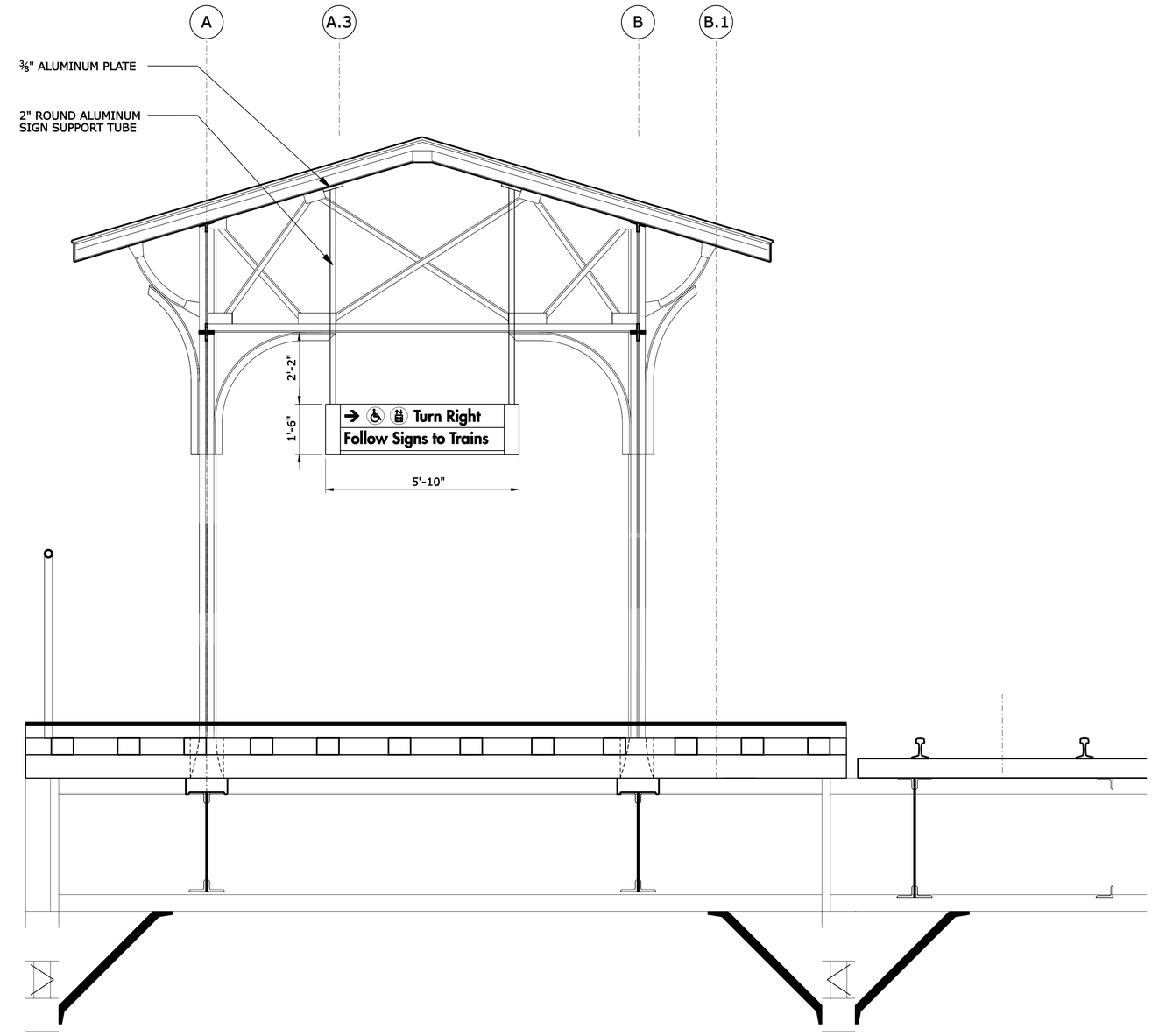

TYPICAL PERPENDICULAR CANOPY MOUNT DETAIL

REV.	DATE	REVISION DESCRIPTION	SHEET NO.

THE INFORMATION, INCLUDING ESTIMATED QUANTITIES OF WORK, SHOWN ON THESE SHEETS IS BASED ON LIMITED INVESTIGATIONS BY THE STATE AND IS IN NO WAY WARRANTED TO INDICATE THE CONDITIONS OF ACTUAL QUANTITIES OF WORK WHICH WILL BE REQUIRED.

Plotted Date: 8/14/2014

DESIGNER/DRAFTER: PB

CHECKED BY: M. RUMNEY

SCALE: AS NOTED

STATE OF CONNECTICUT
DEPARTMENT OF TRANSPORTATION

Filename: ...\FA_CGR_CPS_0170-2296_063_05_SCM_007.dgn

SIGNATURE/BLOCK:
Baker
Michael Baker Engineering Inc.
500 Enterprise Drive
Suite 2B
Rocky Hill, CT 06067

PROJECT TITLE:
NEW HAVEN - HARTFORD SPRINGFIELD RAIL CORRIDOR

TOWN: HARTFORD

DRAWING TITLE: SIGN MOUNTING DETAILS II

PROJECT NO. 170-3261

DRAWING NO. SGN-007

SHEET NO. 11.22

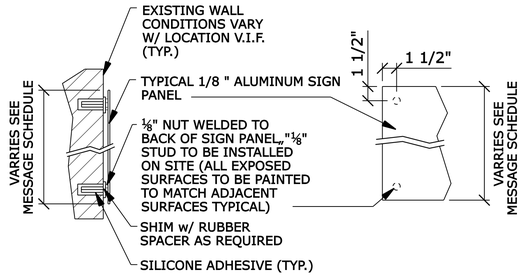

TYPICAL WALL MOUNT DETAIL
SCALE: 1-1/2" = 1'-0"

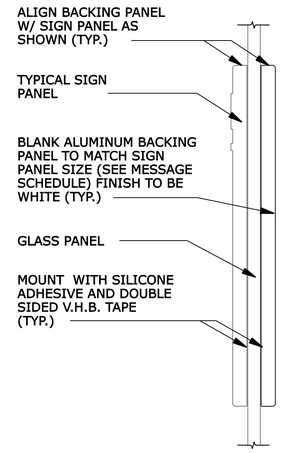

TYPICAL GLASS MOUNT w/ BACKING PANEL DETAIL
NTS

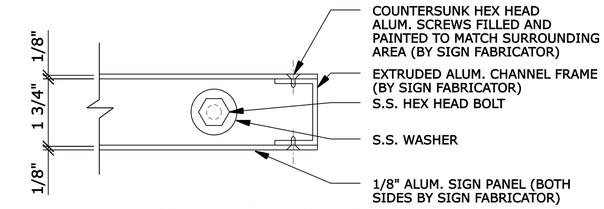

PLAN - SIGN PANEL EDGE DETAIL
NTS

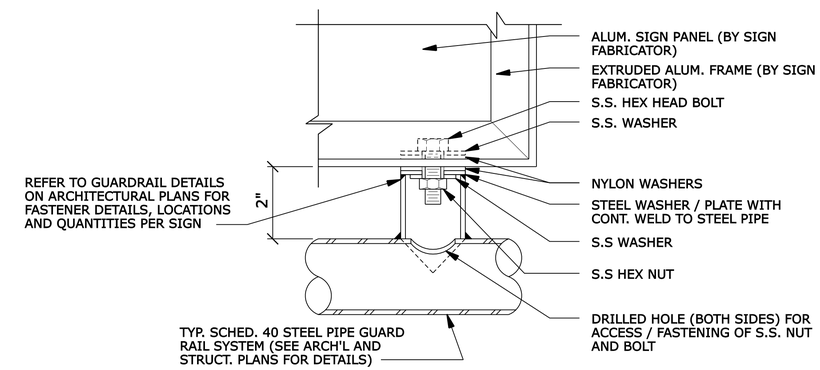

SECTION - SIGN PANEL CONNECTION DETAIL
NTS

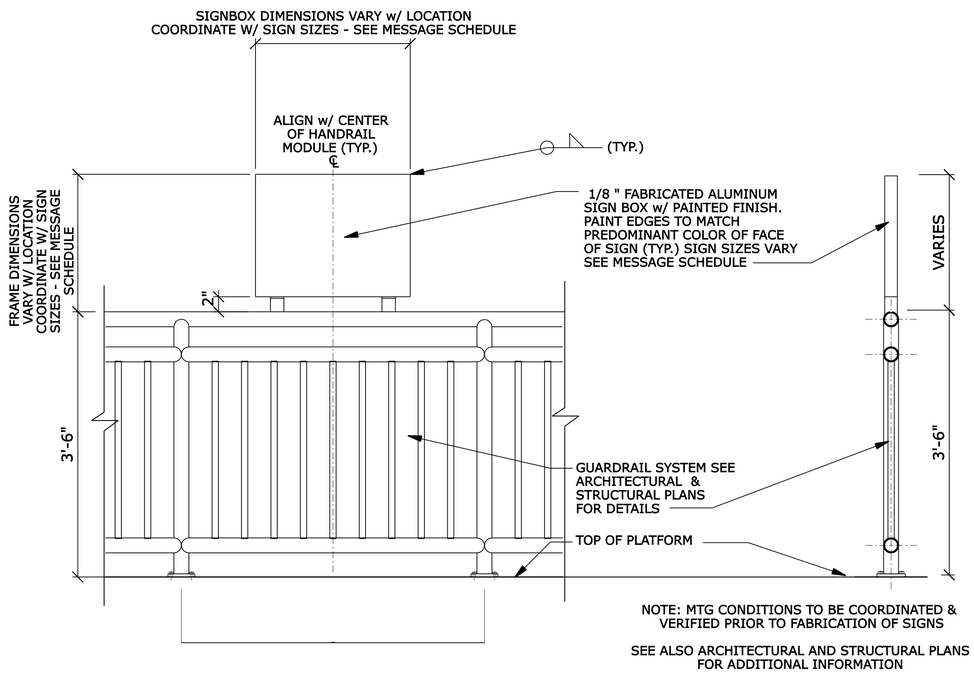

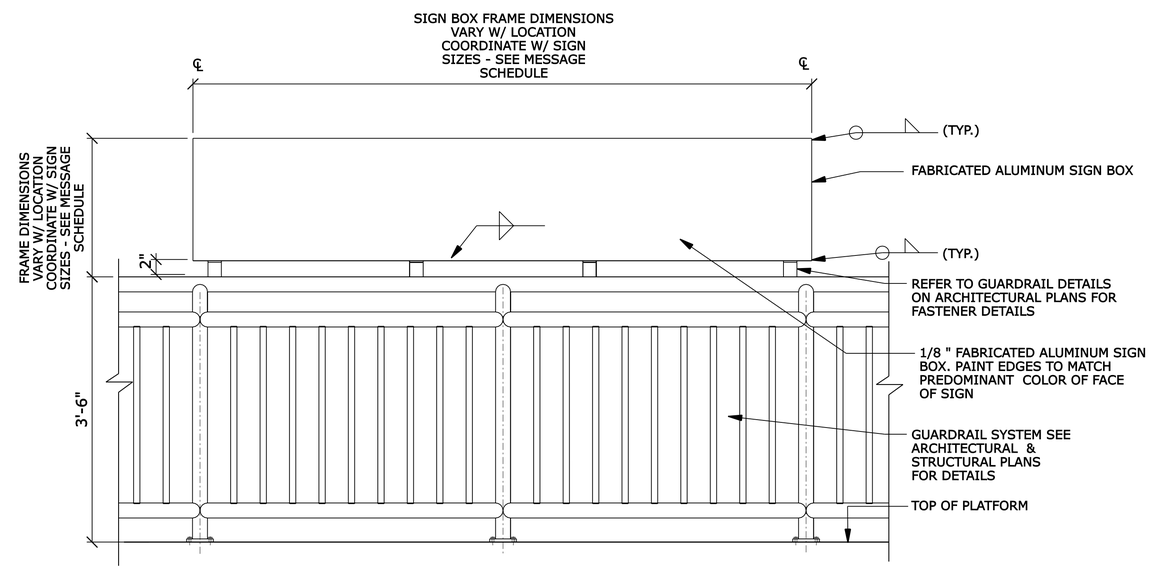

TYPICAL PLATFORM RAILING MOUNT DETAILS
SCALE: 1" = 1'-0"

REV.	DATE	REVISION DESCRIPTION	SHEET NO.
-	-	-	-
-	-	-	-
-	-	-	-
-	-	-	-
-	-	-	-
-	-	-	-

THE INFORMATION, INCLUDING ESTIMATED QUANTITIES OF WORK, SHOWN ON THESE SHEETS IS BASED ON LIMITED INVESTIGATIONS BY THE STATE AND IS IN NO WAY WARRANTED TO INDICATE THE CONDITIONS OF ACTUAL QUANTITIES OF WORK WHICH WILL BE REQUIRED.

Plotted Date: 8/14/2014

DESIGNER/DRAFTER: **PB**
CHECKED BY: **M. RUMNEY**
SCALE AS NOTED

STATE OF CONNECTICUT
DEPARTMENT OF TRANSPORTATION

Filename: ...\FA..CGR..CPS..0170-2296..063..05..SCM..008.dgn

SIGNATURE/BLOCK:
Baker
Michael Baker Engineering Inc.
500 Enterprise Drive
Suite 2B
Rocky Hill, CT 06067

STATE OF CONNECTICUT
MICHAEL DELESKI
No. 19079
LICENSED PROFESSIONAL ENGINEER

PROJECT TITLE:
NEW HAVEN - HARTFORD SPRINGFIELD RAIL CORRIDOR

TOWN: **HARTFORD**

DRAWING TITLE: **SIGN MOUNTING DETAILS III**

PROJECT NO. **170-3261**
DRAWING NO. **SGN-008**
SHEET NO. **11.23**