12-STRUCTURAL

INDEX OF DRAWINGS

DRAWING NUMBER	DRAWING TITLE
STI-001	DRAWING INDEX
FST-001	STRUCTURAL NOTES 1
FST-002	STRUCTURAL NOTES 2
FST-100	PLATFORM FRAMING PLAN
FST-200	RETRACTABLE EDGE DETAILS
FST-300	FRAMING DETAILS 1
FST-301	FRAMING DETAILS 2
FST-302	FRAMING DETAILS 3
FST-400	EGRESS STAIRS DETAILS 1
FST-401	EGRESS STAIRS DETAILS 2
FST-500	EGRESS STAIRS FOUNDATION DETAILS
FST-600	PLATFORM REPAIR LOCATION PLAN
FST-601	GIRDER REPAIR ELEVATIONS - 1
FST-602	GIRDER REPAIR ELEVATIONS - 2
FST-603	REPAIR DETAILS TYPE 1

DESIGNED BY:

STV 100 years

STV INCORPORATED
80 FERRY BOULEVARD
STRATFORD, CT 06615

Digitally signed by James Sherwonit
Date: 2014.09.29 11:59:06-04'00'

DESIGNED BY:

TranSystems

TranSystems
530 PRESTON AVENUE
MERIDEN, CT 06450

David Stahnke
2014.09.25 14:00:29-04'00'

REV.	DATE	REVISION DESCRIPTION	SHEET NO.

THE INFORMATION, INCLUDING ESTIMATED QUANTITIES OF WORK, SHOWN ON THESE SHEETS IS BASED ON LIMITED INVESTIGATIONS BY THE STATE AND IS IN NO WAY WARRANTED TO INDICATE THE CONDITIONS OF ACTUAL QUANTITIES OF WORK WHICH WILL BE REQUIRED.

Plotted Date: 9/25/2014

DESIGNER/DRAFTER: J POPOLI

CHECKED BY: H BUI

STATE OF CONNECTICUT
DEPARTMENT OF TRANSPORTATION

Filename: ...\FA..CGR..CPS..0170-2296..063...05..STI...001.dgn

SIGNATURE/BLOCK:

TranSystems
530 PRESTON AVENUE
MERIDEN, CT 06450

PROJECT TITLE:

NEW HAVEN - HARTFORD
SPRINGFIELD
RAIL CORRIDOR

TOWN: HARTFORD

DRAWING TITLE: DRAWING INDEX

PROJECT NO. 170-3261

DRAWING NO. STI-001

SHEET NO. 12.001

Connecticut Department of Transportation
QA/QC Format Check

DESIGN CRITERIA

DC-1 BUILDING CODES AND SPECIFICATIONS:

A. CONNECTICUT STATE BUILDING CODE, 2005, WITH 2009 AMENDMENT
B. INTERNATIONAL CODE COUNCIL (ICC), 2003 INTERNATIONAL BUILDING CODE
C. AMERICAN SOCIETY OF CIVIL ENGINEERS (ASCE), MINIMUM DESIGN LOADS FOR BUILDINGS AND OTHER STRUCTURES, ASCE 7-02
D. STATE OF CONNECTICUT DEPT. OF TRANSPORTATION, STANDARD SPECIFICATIONS FOR ROADS, BRIDGES AND INCIDENTAL CONSTRUCTION, FORM 816, 2004
E. AMTRAK STANDARD TRACK PLAN FOR MINIMUM ROADWAY CLEARANCE, AM 70050-G
F. AMERICAN INSTITUTE OF STEEL CONSTRUCTION(AISC), ALLOWABLE STEEL DESIGN, THIRTEENTH EDITION
G. AMERICAN CONCRETE INSTITUTE (ACI), BUILDING CODE REQUIREMENTS FOR STRUCTURAL CONCRETE, ACI 318-08
H. AMERICAN INSTITUTE OF TIMBER CONSTRUCTION, AITC, "TIMBER CONSTRUCTION MANUAL" (LATEST EDITION), INCLUDING "CODE OF STANDARD PRACTICE, AITC 106"
I. NATIONAL FOREST PRODUCTS ASSOCIATION, NFPA, "NATIONAL DESIGN SPECIFICATIONS FOR WOOD CONSTRUCTION" (LATEST EDITION).
J. AMERICAN ASSOCIATION OF STATE HIGHWAY AND TRANSPORTATION OFFICALS (AASHTO), LRFD BRIDGE DESIGN SPECIFICATIONS 2012.

DC-2 DESIGN LOADS CRITERIA:

A. LIVE LOADS	
1. LANDINGS & PLATFORM	150 PSF
2. STAIRS & RAMPS	100 PSF
B. CONSTRUCTION LOADS (NOT TO EXCEED DESIGN LIVE LOADS)	
C. WIND DESIGN CRITERIA	
1. BASIC WIND SPEED FOR 3 SEC GUSTS(V)	100 MPH
2. WIND IMPORTANCE FACTOR (Iw)	1.0
3. EXPOSURE CATEGORY	C
D. SEISMIC DESIGN CRITERIA	
1. SEISMIC IMPORTANCE FACTOR (Ie)	1.5
2. SITE CLASSE	
3. MAPPED SPECTRAL RESPONSE ACCELERATION, SHORT PERIOD (Ss)	0.274
4. MAPPED SPECTRAL RESPONSE ACCELERATION AT 1 SECOND (S1)	0.085
5. SPECTRAL RESPONSE COEFFICIENT AT SHORT PERIOD (Sds)	0.442
6. SEISMIC DESIGN CATEGORY	D
7. BASIS SEISMIC FORCE RESISTING SYSTEM - STEEL SYSTEM NOT SPECIFICALLY DETAILED FOR SEISMIC RESISTANCE	
8. ANALYSIS PROCEDURE USED IS EQUIVALENT LATERAL FORCE PROCEDURE	

DC-3 FOUNDATION DESIGN CRITERIA:

A. FOUNDATION DESIGN IS BASED UPON THE FOLLOWING SOIL PARAMETERS:	
1. NET ALLOWABLE SOIL BEARING PRESSURE:	
A. SPREAD OR CONTINUOUS FOOTINGS	1000 PSF
B. FROST DEPTH	42" (CONNECTICUT MIN.)

DC-4 MATERIALS:

THE FOLLOWING ASTM DESIGN STANDARDS AND STRESSES SHALL BE THE APPROPRIATE MATERIALS USED FOR THIS PROJECT:

A. CEMENT:	ASTM C150 TYPE I OR III ASTM C150 TYPE II (CONCRETE IN CONTACT WITH EARTH)
B. CONCRETE - MINIMUM COMPRESSIVE STRENGTH (f'c) AT 28 DAYS FOR NORMAL WEIGHT CONCRETE, UON:	
1. FOOTINGS, WALLS, PIERS & SLABS	4000 PSI
C. NON-SHRINK LEVELING GROUT	ASTM C1107, f'c= 5000 PSI AT 28 DAYS
D. REINFORCEMENT:	
1. DEFORMED BARS	ASTM A615, GRADE 60
2. WELDED WIRE FABRIC	ASTM A884
3. EPOXY COATED BARS	ASTM A775
E. STEEL:	
1. STRUCTURAL STEEL WIDE FLANGE & T-SECTIONS	ASTM A992
2. STRUCTURAL ANGLES, CHANNELS AND PLATES	ASTM A36
3. BASE PLATES	ASTM A572, GRADE 50
4. HOLLOW STRUCTURAL SECTIONS	ASTM A500, GRADE B
5. STRUCTURAL STEEL PIPE	ASTM A53, GRADE B
6. HIGH STRENGTH BOLTS	ASTM A325-N OR -TC
7. ANCHOR RODS	ASTM F1554, GRADE 55
8. HEADED SHEAR STUD	ASTM A108 TYPE B
9. WELDING ELECTRODE	AWS A5.1 OR A5.5 E70XX
10. STEEL DECK AND METAL STUDS	ASTM A653
11. STAINLESS STEEL FASTENERS	ASTM F593
F. TIMBER: ALL SAWN LUMBER SHALL HAVE 19% MAX MOISTURE CONTENT AND SHALL BE SURFACE DRY HEM-FIR IN THE FOLLOWING GRADES:	
1. JOISTS AND RAFTERS	NO. 2 OR BETTER
2. MISC. FRAMING (BLOCKING, SILL PLATES, ETC.)	STUD OR BETTER
3. PLYWOOD PANELS - PROVIDE APA PERFORMANCE RATED PANELS COMPLYING WITH THE INDICATED REQUIREMENTS FOR THICKNESS, SPAN RATING, AND EDGE DETAIL.	

G. COMPOSITED DECK:
SEE SPECIAL PROVISION

GENERAL

G-1 METHODS, PROCEDURES AND SEQUENCES OF CONSTRUCTION ARE THE RESPONSIBILITY OF THE CONTRACTOR. THE CONTRACTOR IS RESPONSIBLE FOR IDENTIFYING AND IMPLEMENTING THE NECESSARY PRECAUTIONS TO MAINTAIN AND ENSURE THE INTEGRITY OF THE STRUCTURE AT ALL STAGES OF CONSTRUCTION.

G-2 TEMPORARY BRACING, SHEETING, SHORING, ETC, REQUIRED TO ENSURE THE STRUCTURAL INTEGRITY/STABILITY OF THE EXISTING BUILDINGS, SIDEWALKS, UTILITIES, ETC, DURING CONSTRUCTION IS THE RESPONSIBILITY OF THE CONTRACTOR AND SHALL BE DESIGNED BY A REGISTERED PROFESSIONAL ENGINEER EMPLOYED BY THE CONTRACTOR.

G-3 IMPLEMENTATION OF JOB SITE SAFETY IS THE SOLE RESPONSIBILITY OF THE CONTRACTOR.

G-4 SLEEVES OR BLOCK-OUTS REQUIRED FOR PASSAGE OF DUCTWORK, PIPING, DRAINS, CONDUIT, ETC, IN ADDITION TO ANCHORS AND HANGERS REQUIRED FOR EQUIPMENT AND PIPING AND UNDER-SLAB UTILITIES ARE NOT SPECIFICALLY, NOR GENERALLY, INDICATED ON THE STRUCTURAL DRAWINGS. THE CONTRACTOR IS RESPONSIBLE FOR DETERMINING SUCH REQUIREMENTS PRIOR TO FABRICATION OR ERECTION OF THE STRUCTURE. PENETRATIONS ARE SUBJECT TO APPROVAL BY THE STRUCTURAL ENGINEER OF RECORD.

G-5 DIMENSIONS AND INSTALLATION DETAILS OF PURCHASED EQUIPMENT MUST BE VERIFIED AND COORDINATED WITH THE SUPPORTING STRUCTURE. THE CONTRACTOR IS RESPONSIBLE FOR DETERMINING SUCH REQUIREMENTS FROM SUBCONTRACTORS AND EQUIPMENT SUPPLIERS ALONG WITH COORDINATING THE LOCATIONS AND DETAILS FOR THESE ITEMS PRIOR TO FABRICATION OR ERECTION OF THE SUPPORTING STRUCTURE. ANY CONFLICTS BETWEEN THESE ITEMS AND THE BUILDING STRUCTURE IS TO BE BROUGHT TO THE ATTENTION OF THE STRUCTURAL ENGINEER OF RECORD FOR RESOLUTION.

G-6 THE CONTRACTOR IS TO REFER TO THE ARCHITECTURAL DRAWINGS FOR DIMENSIONS AND DETAILS NOT PROVIDED.

G-7 WORK NOT INDICATED ON A PART OF THE DRAWINGS, BUT REASONABLY IMPLIED TO BE SIMILAR TO THAT SHOWN AT CORRESPONDING LOCATIONS, IS TO BE REPEATED.

G-8 EXISTING BUILDING INFORMATION SHOWN IS BASED UPON EXISTING BUILDING DOCUMENTS AND/OR FROM FIELD OBSERVATION. THE INFORMATION CONTAINED HEREIN MAY REQUIRE ADJUSTMENTS AND/OR MODIFICATIONS TO CONFORM TO EXISTING CONDITIONS. THE CONTRACTOR SHALL FIELD VERIFY ALL EXISTING BUILDING INFORMATION SHOWN (DIMENSIONS, ELEVATIONS, ETC) AND NOTIFY THE STRUCTURAL ENGINEER OF RECORD OF ANY DISCREPANCIES PRIOR TO FABRICATION OF ANY STRUCTURAL COMPONENT.

G-9 DETAILS DESIGNATED AS "TYPICAL DETAILS," APPLY GENERALLY TO THE DRAWINGS IN AREAS WHERE CONDITIONS ARE SIMILAR TO THOSE DESCRIBED IN THE DETAILS.

G-10 SHOP DRAWINGS:

A. SHOP DRAWINGS FOR ALL MATERIALS ARE TO BE SUBMITTED TO THE ENGINEER FOR REVIEW PRIOR TO THE START OF FABRICATION OR COMMENCEMENT OF WORK PER THE PROJECT SPECIFICATIONS.
B. SHOP DRAWINGS MUST BE CHECKED AND STAMPED BY THE CONTRACTOR PRIOR TO SUBMISSION. THE CONTRACTOR'S STAMP OF APPROVAL WILL CONSTITUTE CERTIFICATION THAT THE CONTRACTOR HAS VERIFIED ALL FIELD MEASUREMENTS, CONSTRUCTION CRITERIA, MATERIALS AND SIMILAR DATA AND HAS CHECKED EACH DRAWING FOR COMPLETENESS, COORDINATION, AND COMPLIANCE WITH THE CONTRACT DOCUMENTS.
C. REPRODUCTION OF ANY PORTION OF THE STRUCTURAL CONTRACT DRAWINGS FOR SUBMITTAL AS SHOP DRAWINGS IS PROHIBITED.
D. CHANGES TO SHOP DRAWINGS THAT ARE RE-SUBMITTED MUST BE CLOUDED OR SOMEHOW INDICATE THAT A CHANGE HAS BEEN MADE TO THE PREVIOUSLY ISSUED AND REVIEWED DRAWING.
E. THE CONTRACTOR IS TO PROVIDE THE ENGINEER WITH WRITTEN NOTICE OF DEVIATIONS OF ANY TYPE FROM THE REQUIREMENTS OF THE CONSTRUCTION DOCUMENTS. THE NOTICE MUST BE RECEIVED PRIOR TO SHOP DRAWING SUBMITTAL. THE CONTRACTOR REMAINS LIABLE FOR ANY DEVIATION UNLESS REVIEWED BY THE ENGINEER AND ACKNOWLEDGED IN WRITING, PRIOR TO THE RECEIPT OF THE SHOP DRAWINGS.

G-11 THE CONTRACTOR IS TO ENSURE THAT THE TRACK SIDE TOP OF PLATFORM IS 4'-0" ABOVE THE TOP OF THE ADJACENT TRACK. THE TRACK SIDE EDGE OF PLATFORM SHALL BE 5'-7" FROM THE CENTERLINE OF THE ADJACENT TRACK.

STRUCTURAL STEEL

S-1 PRIOR TO FABRICATION, THE STEEL FABRICATOR IS TO SUBMIT TO THE STRUCTURAL ENGINEER OF RECORD FOR REVIEW THE FOLLOWING:

A. DESIGN CALCULATIONS OF STRUCTURAL STEEL CONNECTIONS, PREPARED BY OR UNDER THE SUPERVISION OF A PROFESSIONAL ENGINEER REGISTERED IN THE STATE OF WHICH THE PROJECT IS CONSTRUCTED AND BEARING THE SEAL OF THE PROFESSIONAL ENGINEER.
B. SHOP DRAWINGS SHOWING ERECTION PLANS, PIECE DRAWINGS, AND CONNECTION DETAILS.

S-2 THE STRUCTURAL STEEL FABRICATOR, AND/OR GENERAL CONTRACTOR, MUST VERIFY ALL EXISTING DIMENSIONS AND CONDITIONS AT THE SITE. ALL DISCREPANCIES FOUND ARE TO BE REPORTED TO THE STRUCTURAL ENGINEER OF RECORD PRIOR TO PREPARATION OF SHOP DRAWINGS. SHOP DRAWINGS ARE TO INCLUDE ALL FIELD MEASUREMENTS AND CONDITIONS.

S-3 STRUCTURAL STEEL FABRICATOR IS TO PROVIDE FOR VERTICAL AND HORIZONTAL FIELD ADJUSTMENT OF ALL SUPPORT ASSEMBLIES.

S-4 CUTS, HOLES, COPING, ETC REQUIRED FOR OTHER TRADES MUST BE SHOWN ON THE SHOP DRAWINGS AND MADE IN THE SHOP. CUTS OR BURNING OF HOLES IN THE FIELD WILL NOT BE PERMITTED.

S-5 STEEL BEAMS ARE TO BE EQUALLY SPACED IN BAYS UNLESS OTHERWISE NOTED.

S-6 FABRICATE AND INSTALL BEAMS WITH NATURAL CAMBER UP UNLESS CAMBER IS NOTED ON THE DRAWINGS.

S-7 ALL STRUCTURAL STEEL FRAMES AND TRUSSES ARE TO BE SECURELY BRACED UNTIL ALL FLOOR SLABS AND ROOF DECKS HAVE BEEN INSTALLED AND BECOME CAPABLE OF STABILIZING THE FRAMES.

S-8 UNLESS ALTERNATE CONNECTIONS ARE APPROVED BY THE ENGINEER, BOLTED CONNECTIONS SHALL BE MADE ACCORDING TO AISC TABLE II OR III - FRAMED BEAM CONNECTIONS. THE MINIMUM DEPTH OF THE CONNECTION MUST BE MORE THAN 67% OF THE BEAM DEPTH EXCEPT THAT BEAMS FRAMING TO COLUMNS SHALL HAVE FULL DEPTH CONNECTIONS USING $^{3}/_{8}$" MINIMUM CONNECTION ANGLES OR PLATES.

A. NON-COMPOSITE BEAM CONNECTIONS TO BE DESIGNED FOR ONE HALF THE UNIFORM LOAD CAPACITY OF THE BEAM AS TABULATED BY AISC UNLESS HIGHER LOADS ARE INDICATED ON THE DRAWINGS.
B. COMPOSITE BEAMS (SHEAR STUDS ON TOP FLANGE) REQUIRE CONNECTION CAPACITIES TO BE INCREASED TO 75% LOAD CAPACITY OF THE BEAM UNLESS HIGHER LOADS ARE INDICATED ON THE DRAWINGS.

BEAM SIZE	MIN. NO. OF BOLTS
W8, W10	2
W12, W14	3
W16, W18	4

S-9 UNLESS OTHERWISE NOTED, STRUCTURAL STEEL CONNECTIONS TO BE SHOP WELDED AND FIELD BOLTED.

A. BOLTS: $^{3}/_{4}$" DIAMETER ASTM A325 UON WITH MATCHING WASHERS AND HEAVY HEX NUTS. USE TYPE N (HIGH STRENGTH) FOR FRAMED CONNECTIONS AND TYPE SC AT WIND MOMENT AND BRACING CONNECTIONS.

S-10 PAINT AND PROTECTION:

A. STRUCTURAL STEEL TO RECEIVE PAINTED FINISH TO BE SHOP CLEANED AND PRIME PAINTED PER THE SPECIFICATIONS. REFERENCE ARCHITECTURE FOR FINISH PAINT SYSTEMS.
B. GALVANIZED FASTENERS AND ACCESSORIES TO BE HOT DIPPED PER ASTM A153.
C. REPAIR DAMAGE TO GALVANIZED COATINGS USING ASTM A780 ZINC RICH PAINT.

FOUNDATIONS

F-1 FOUNDATIONS ARE TO BE PLACED ON 12" GRANULAR FILL COMFORMING TO THE REQUIREMENTS OF CONNDOT FORM 816 SECTION 2.13.

F-2 ELEVATIONS SHOWN ON THE DRAWINGS AT WHICH FOUNDATIONS BEAR ARE APPROXIMATE AND MAY VARY TO SUIT SUBSURFACE SOIL CONDITIONS.

F-3 PRIOR TO PLACING CONCRETE, ANY WATER PRESENT IS TO BE PUMPED OUT FROM THE BOTTOM OF EXCAVATIONS TO A LEVEL APPROVED BY THE GEOTECHNICAL ENGINEER.

SAWN LUMBER

SL-1 SAWN LUMBER SHALL BE IN ACCORDANCE WITH THE NFPA NATIONAL DESIGN SPECIFICATIONS.

SL-2 ALL SAWN LUMBER SHALL HAVE MINIMUM ALLOWABLE STRESS OF:
F'cl = (F'cl) (Cm) (Cb) = (625)(0.67)(1.02) = 427 PSI

SL-3 ALL TIMBER SHALL BE TREATED WITH PENTACHLOROPHENOL PRESERVATIVE. SEE SPECIAL PROVISIONS.

SL-4 ALL TIMBER IS ROUGH UNLESS OTHERWISE NOTED. ALL TIMBER DIMENSIONS SHOWN ARE ACTUAL SIZE.

SL-5 ALL FASTENERS, ANCHOR BOLTS, AND WASHERS, USED IN ASSOCIATION WITH TIMBER, SHALL BE STAINLESS STEEL.

REINFROCED CONCRETE

C-1 MIXING, TRANSPORTING, PLACING, AND TESTING OF CONCRETE SHALL BE IN ACCORDANCE WITH ACI 301.

C-2 PRIOR TO CONCRETE PLACEMENT, THE CONTRACTOR MUST SUBMIT CONCRETE MIX DESIGNS FOR EACH TYPE OF CONCRETE TO BE USED, PREPARED IN ACCORDANCE WITH THE PROJECT SPECIFICATIONS, TO THE STRUCTURAL ENGINEER OF RECORD FOR REVIEW.

C-3 THE SLUMP AT POINT OF PLACEMENT IS NOT TO EXCEED 4"(+/-) 1" AND THE WATER/CEMENT RATIO IS NOT TO EXCEED 0.45. IF INCREASED SLUMP OF 8" IS DESIRED FOR PUMPING, A SUPER-PLASTICIZER ADMIXTURE MAY BE ADDED.

A. AIR ENTRAINMENT: 4% TO 5% IN CONCRETE EXPOSED TO FREEZE/THAW.

C-4 REINFORCEMENT IS TO BE DETAILED, FABRICATED, AND PLACED IN ACCORDANCE WITH THE ACI "DETAILING MANUAL NO. SP-66" (LATEST EDITION).

C-5 PROVIDE ADEQUATE CONCRETE COVER IN ACCORDANCE WITH THE REQUIREMENTS SET FORTH BY ACI 318.

C-6 REINFORCEMENT IS TO BE SECURELY HELD IN PLACE WHILE PLACING CONCRETE. IF REQUIRED, ADDITIONAL BARS, STIRRUPS, OR CHAIRS WILL BE PROVIDED BY THE CONTRACTOR TO FURNISH SUPPORT FOR ALL BARS WHERE NECESSARY DURING CONSTRUCTION.

C-7 CONTINUOUS REINFORCING BARS TO BE TURNED AND LAPPED AT CORNERS AND INTERSECTIONS OF WALLS AND FOOTINGS. LAP SPLICES TO BE CLASS B TENSION SPLICES PER ACI 318. HOOKED BARS TO HAVE STANDARD ACI HOOKS UNO.

C-8 CONTINUOUS TOP BARS TO BE SPLICED AT MID-SPAN. CONTINUOUS BOTTOM BARS TO BE SPLICED AT CENTERLINE OF SUPPORTS (OR AS SHOWN ON DETAILS).

C-9 WELDED WIRE REINFORCEMENT IS TO BE SUPPLIED IN FLAT SHEETS ONLY. LAP WELDED WIRE REINFORCEMENT TWO FULL MESH LENGTHS (OR 6" MIN) AT SPLICES AND WIRE TOGETHER. WELDED WIRE REINFORCEMENT TO BE PLACED 1/4 TH THE SLAB THICKNESS FROM THE TOP OF SLABS, UON.

C-10 SLEEVES, INSERTS, MECHANICAL OPENINGS, CONDUITS, PIPES, RECESSES, DEPRESSIONS, CURBS AND OTHER EMBEDDED ITEMS TO BE PROVIDED FOR AS SHOWN ON THE ARCHITECTURAL, MECHANICAL, PLUMBING AND ELECTRICAL DRAWINGS AND AS REQUIRED BY EQUIPMENT MANUFACTURERS. INSTALLATION OF THESE ITEMS TO BE COORDINATED AND PROVIDED FOR PRIOR TO PLACING CONCRETE.

C-11 PROVIDE BLOCK-OUTS AS REQUIRED FOR PRE-CAST CONCRETE PANEL ANCHORAGE. FILL WITH CONCRETE ONCE PANEL IS IN PLACE.

C-12 ALL EXPOSED EDGES OF CONCRETE SHALL BE BEVELED ½" X ½" UON.

COMPOSITE PLATFORM:

CP-1 COMPOSITE PLATFORM SHALL BE INSTALLED, STORED, AND TRANSPORTED PER MANUFACTURER'S RECOMMENDATIONS.

RETRACTABLE EDGE:

RE-1 RETRACTABLE EDGE SHALL BE INSTALLED, STORED, AND TRANSPORTED PER MANUFACTURER'S RECOMMENDATIONS.

KEYS AND ABBREVIATIONS

AASHTO	AMERICAN ASSOCIATION OF STATE HIGHWAY AND TRANSPORTATION OFFICIALS
ACi	AMERICAN CONCRETE INSTITUTE
ADA	AMERICANS WITH DISABILITIES ACT
AISC	AMERICAN INSTITUTE OF STEEL CONSTRUCTION
APPROX	APPROXIMATE
ASCE	AMERICAN SOCIETY OF CIVIL ENGINEERS
ASTM	AMERICAN SOCIETY FOR TESTING AND MATERIALS
AWS	AMERICAN WELDING SOCIETY
B/	BOTTOM OF
CJP	COMPLETE JOINT PENETRATION
℄	CENTERLINE
DL	DEAD LOAD
EL	ELEVATION
FT	FOOT OR FEET
GALV	GALVANIZED
H	HIGH
HDPE	HIGH DENSITY POLYETHYLENE
HORIZ	HORIZONTAL
L	LOW
LL	LIVE LOAD
MATL	MATERIAL
MAX	MAXIMUM
MIN	MINIMUM
MPH	MILES PER HOUR
NFPA	NATIONAL FOREST PRODUCTS ASSOCIATION
NTS	NOT TO SCALE
OC	ON CENTER
PSF	POUNDS PER SQUARE FOOT
PSI	POUNDS PER SQUARE INCH
REF	REFERENCE
REQD	REQUIRED
ROW	RIGHT OF WAY
SPEC	SPECIFICATIONS
S.S.	STAINLESS STEEL
T/	TOP OF
TYP	TYPICAL
UHMA	ULTRA HIGH MOLECULAR WEIGHT
UON	UNLESS OTHERWISE NOTED
VERT	VERTICAL
VIF	VERIFY IN FIELD
W/	WITH
W/O	WITHOUT
WWF	WELDED WIRE FABRIC

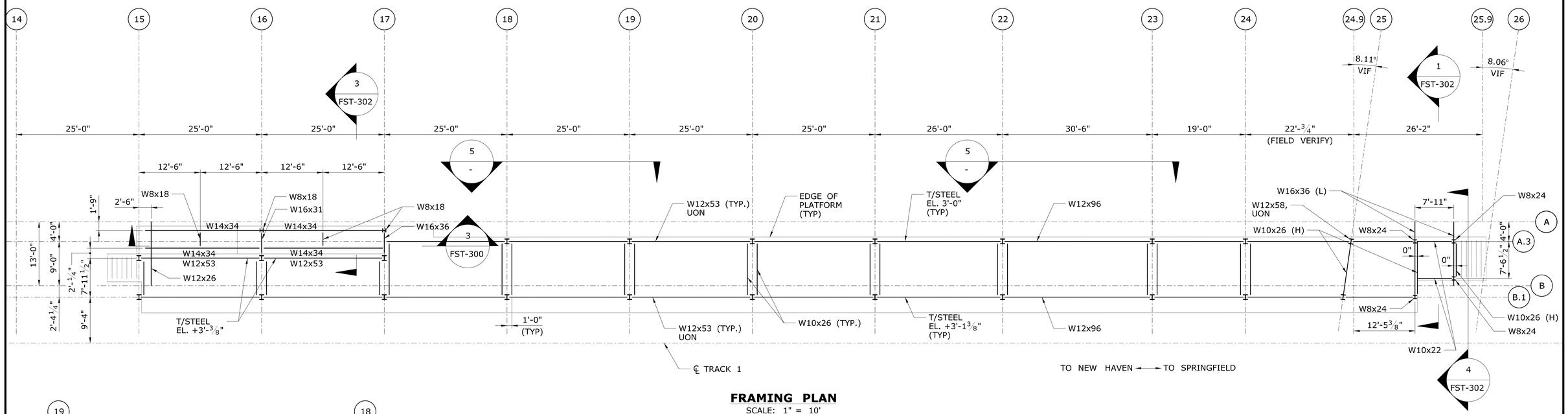

FRAMING PLAN

SCALE: 1" = 10'

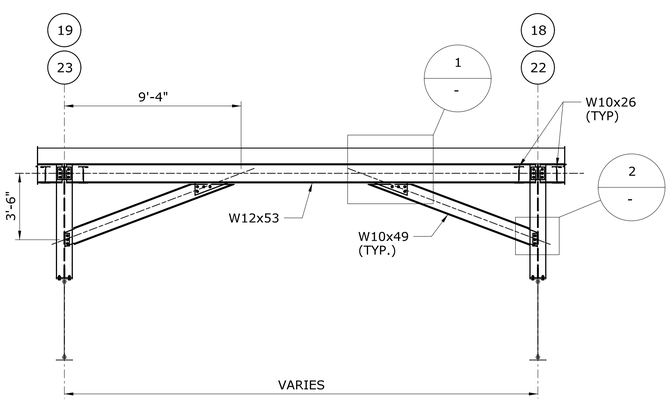

℄ B.1 HAS SIMILAR BRACING AT THIS LOCATION.

5 - VIEW

SCALE: 1/4" = 1'-0"

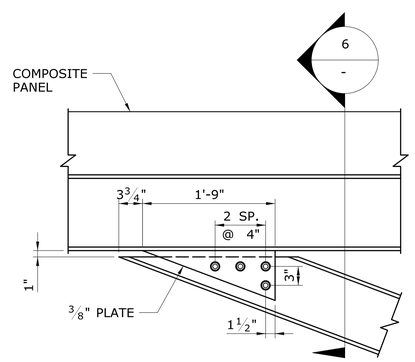

1 - DETAIL

SCALE: 1" = 1'-0"

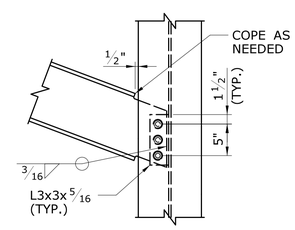

2 - DETAIL

SCALE: 1" = 1'-0"

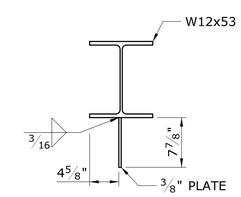

6 - SECTION

SCALE: 1" = 1'-0"

NOTES:

1. TOP OF RAIL, DATUM ELEVATION = 0'-0"
2. T/STEEL EL. +3'-0" ALONG COLUMN A.3
3. T/STEEL EL. +3'-1 3/8" ALONG COLUMN B.1
4. T/STEEL EL. TAKEN ABOVE THE TOP OF RAIL OF THE ADJACENT TRACK.

REV.	DATE	REVISION DESCRIPTION	SHEET NO.

THE INFORMATION, INCLUDING ESTIMATED QUANTITIES OF WORK, SHOWN ON THESE SHEETS IS BASED ON LIMITED INVESTIGATIONS BY THE STATE AND IS IN NO WAY WARRANTED TO INDICATE THE CONDITIONS OF ACTUAL QUANTITIES OF WORK WHICH WILL BE REQUIRED.

Plotted Date: 9/25/2014

DESIGNER/DRAFTER: J POPOLI
CHECKED BY: H BUI
SCALE AS NOTED

STATE OF CONNECTICUT
DEPARTMENT OF TRANSPORTATION

Filename: ...\FA_CGR_CPS_0170-2296_063__05_FST__100.dgn

SIGNATURE/BLOCK:

STATE OF CONNECTICUT DEPARTMENT OF TRANSPORTATION LICENSED PROFESSIONAL ENGINEER No. 19798

TranSystems
530 PRESTON AVENUE
MERIDEN, CT 06450

PROJECT TITLE:
NEW HAVEN - HARTFORD
SPRINGFIELD
RAIL CORRIDOR

TOWN: HARTFORD

DRAWING TITLE: PLATFORM FRAMING PLAN

PROJECT NO. 170-3261
DRAWING NO. FST-100
SHEET NO. 12.004

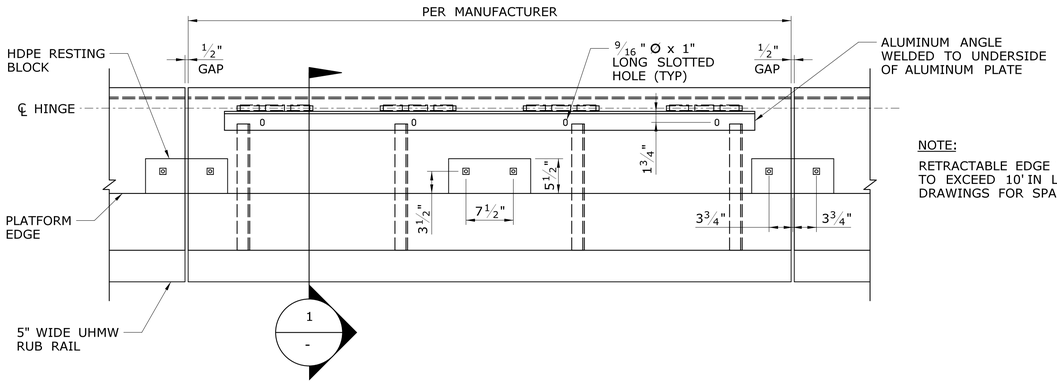

NOTE:

RETRACTABLE EDGE TO SPAN 2 PANELS NOT TO EXCEED 10' IN LENGTH. SEE ARCHITECTURAL DRAWINGS FOR SPACING.

PLAN - BELOW RETRACTABLE PLATFORM EDGE

SCALE: 1" = 1'-0"

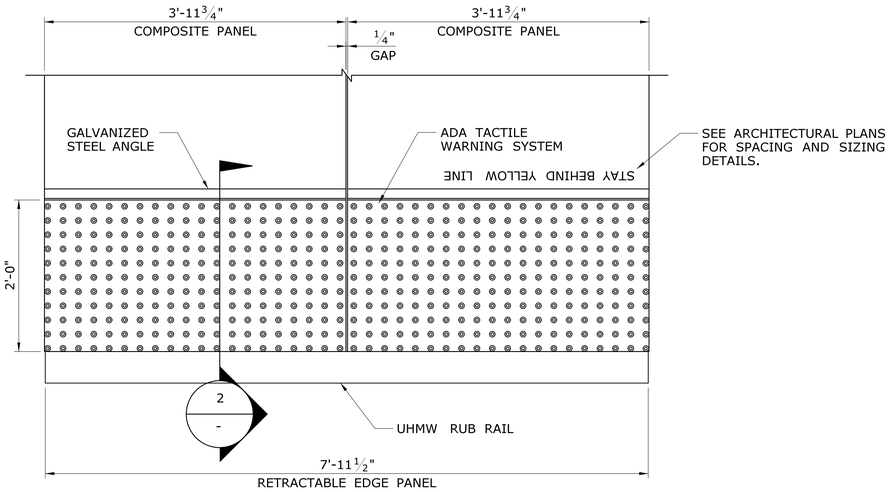

PLAN - TACTILE WARNING SURFACE

SCALE: 1" = 1'-0"

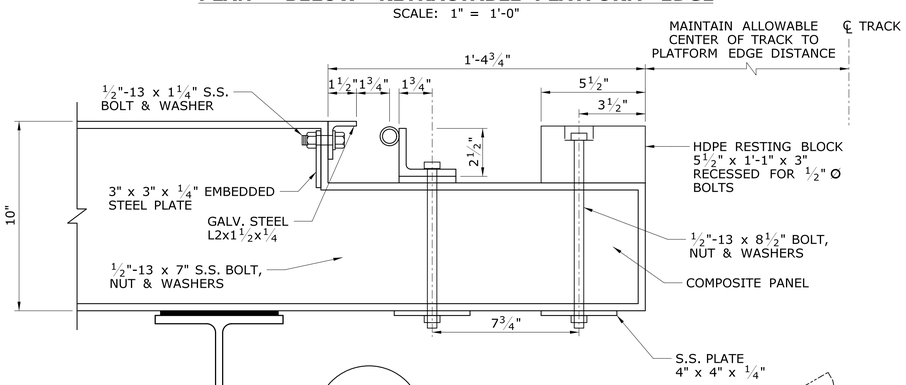

1 / - **SECTION**

SCALE: 3" = 1'-0"

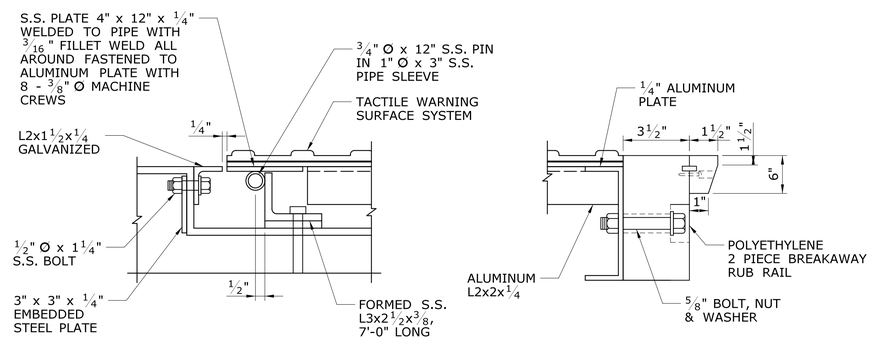

1 / - **DETAIL**

SCALE: 3" = 1'-0"

2 / - **DETAIL**

SCALE: 3" = 1'-0"

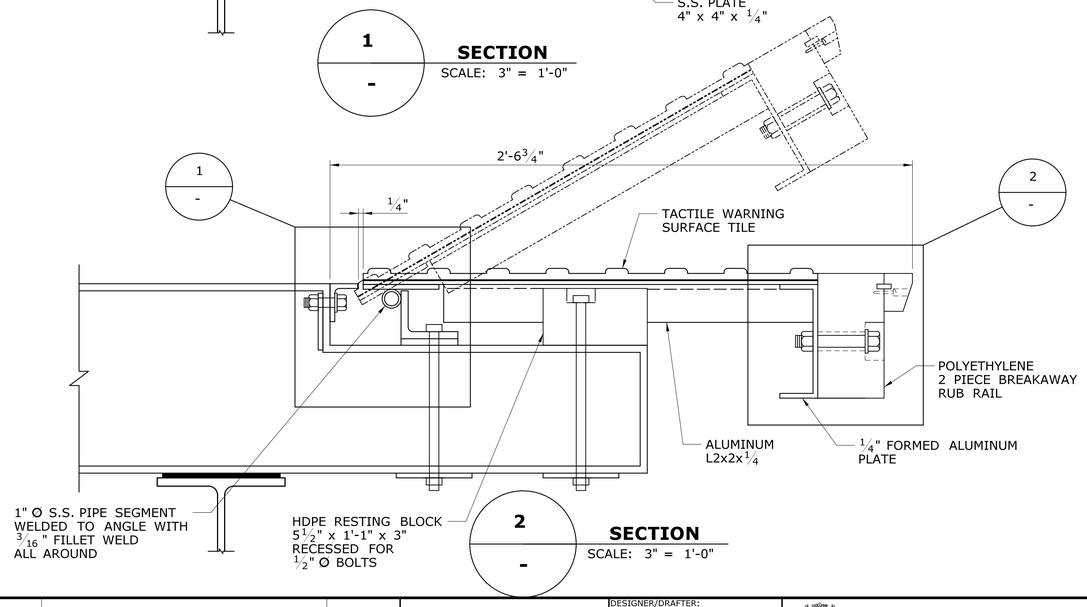

2 / - **SECTION**

SCALE: 3" = 1'-0"

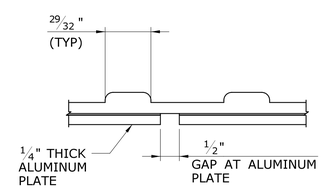

LAP DETAIL

SCALE: 6" = 1'-0"

NOTE:

DECK AND RETRACTABLE EDGE ARE PROPRIETARY PRODUCTS AND SHALL BE INSTALLED PER MANUFACTURER'S RECOMMENDATION.

REV.	DATE	REVISION DESCRIPTION	SHEET NO.

THE INFORMATION, INCLUDING ESTIMATED QUANTITIES OF WORK, SHOWN ON THESE SHEETS IS BASED ON LIMITED INVESTIGATIONS BY THE STATE AND IS IN NO WAY WARRANTED TO INDICATE THE CONDITIONS OF ACTUAL QUANTITIES OF WORK WHICH WILL BE REQUIRED.

Plotted Date: 9/25/2014

DESIGNER/DRAFTER: **J POPOLI**

CHECKED BY: **H BUI**

SCALE AS NOTED

STATE OF CONNECTICUT
DEPARTMENT OF TRANSPORTATION

Filename: ...\FA..CGR..CPS..0170-2296..063...05..FST...200.dgn

SIGNATURE/ BLOCK:

STATE OF CONNECTICUT DAVID A. BIRTH JAC 12778 LICENSED PROFESSIONAL ENGINEER

TranSystems
530 PRESTON AVENUE
MERIDEN, CT 06450

PROJECT TITLE:

NEW HAVEN - HARTFORD SPRINGFIELD RAIL CORRIDOR

TOWN: **HARTFORD**

DRAWING TITLE: **RETRACTABLE EDGE DETAILS**

PROJECT NO. **170-3261**

DRAWING NO. **FST-200**

SHEET NO. **12.005**

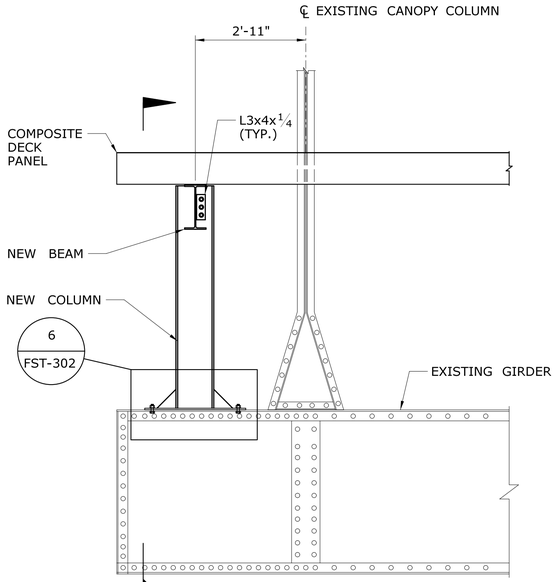

1 / -

FRAMING CONNECTION DETAIL

SCALE: 1/2" = 1'-0"

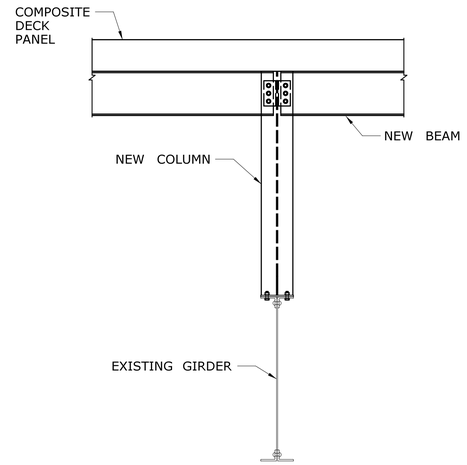

1 / -

SECTION

SCALE: 1/2" = 1'-0"

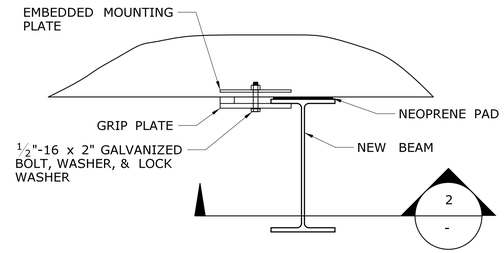

PANEL CONNECTION DETAIL

SCALE: 1 1/2" = 1'-0"

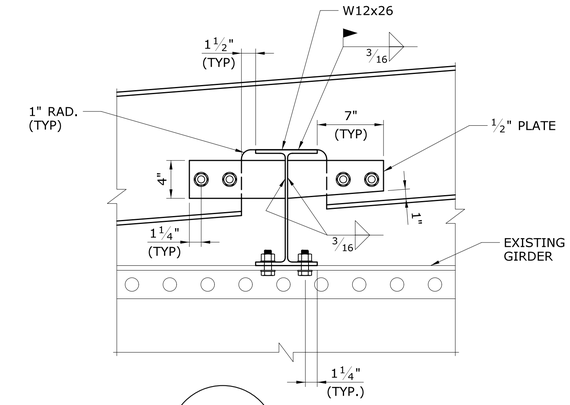

4 / -

DETAIL

SCALE: 1 1/2" = 1'-0"

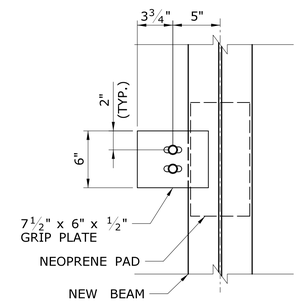

NOTE:

REFER TO MANUFACTURER'S SPECIFICATIONS FOR CONFIGURATION & SPACING

2 / -

SECTION

SCALE: 1 1/2" = 1'-0"

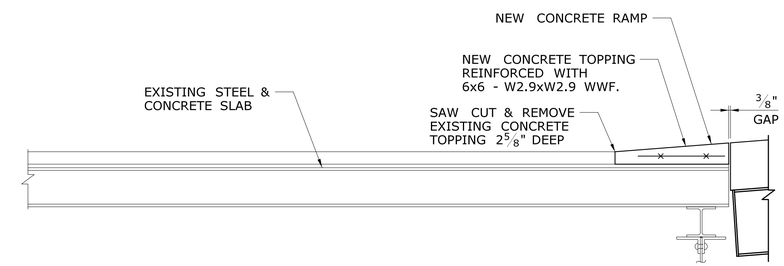

5 / -

DETAIL

SCALE: 3/4" = 1'-0"

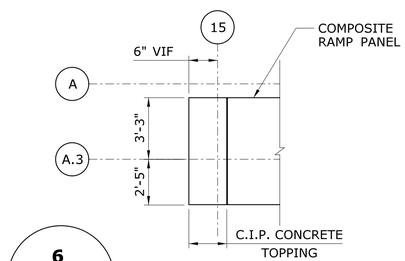

6 / -

VIEW

SCALE: 1/4" = 1'-0"

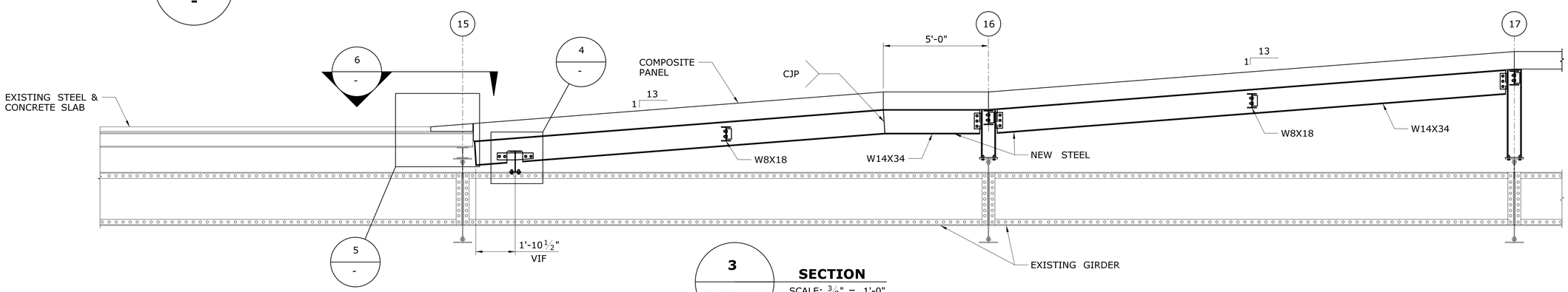

3 / FST-100

SECTION

SCALE: 3/8" = 1'-0"

REV.	DATE	REVISION DESCRIPTION	SHEET NO.

THE INFORMATION, INCLUDING ESTIMATED QUANTITIES OF WORK, SHOWN ON THESE SHEETS IS BASED ON LIMITED INVESTIGATIONS BY THE STATE AND IS IN NO WAY WARRANTED TO INDICATE THE CONDITIONS OF ACTUAL QUANTITIES OF WORK WHICH WILL BE REQUIRED.

Plotted Date: 9/25/2014

DESIGNER/DRAFTER: J POPOLI

CHECKED BY: H BUI

SCALE AS NOTED

STATE OF CONNECTICUT
DEPARTMENT OF TRANSPORTATION

Filename: ...\FA_CGR_CPS_0170-2296_063_05_FST_300.dgn

SIGNATURE/BLOCK:

STATE OF CONNECTICUT DAVID K. STANTON No. 12778 LICENSED PROFESSIONAL ENGINEER

TranSystems
530 PRESTON AVENUE
MERIDEN, CT 06450

PROJECT TITLE:

NEW HAVEN - HARTFORD SPRINGFIELD RAIL CORRIDOR

TOWN: **HARTFORD**

DRAWING TITLE: **FRAMING DETAILS 1**

PROJECT NO. **170-3261**

DRAWING NO. **FST-300**

SHEET NO. **12.006**

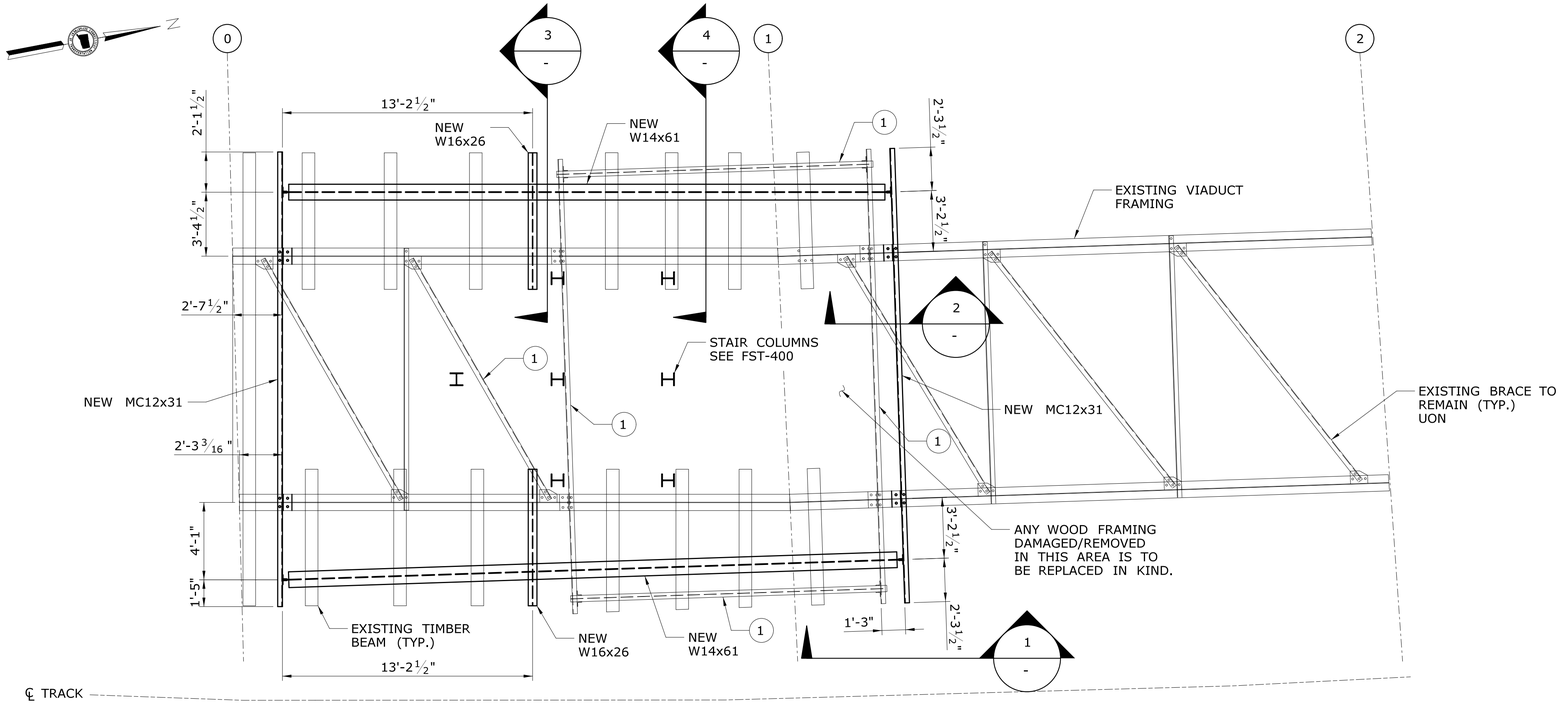

(1) MEMBER TO BE REMOVED AFTER ALL NEW STEEL INSTALLATION

FRAMING PLAN

SCALE: ¼" = 1'-0"

CONSTURCTION NOTES:

1. THE NEW STEEL SUPPORT FRAME IS TO BE CONSTRUCTED WITH THE EXISTING FRAME IN PLACE.
2. THE CONTRACTOR IS THE ENSURE THAT EXISTING TIMBER MEMBERS TO REMAIN ARE SUPPORTED ON THE NEW STEEL FRAME PRIOR THE REMOVAL OF THE EXISTING MEMBERS INDICATED.
3. FOLLOWING REMOVAL OF THE EXISTING FRAME, DECKING ELEMENTS TO BE REMOVED PER THE ARCHITECTURAL PLANS CAN BE DISMANTLED.
4. ANY MODIFICATIONS TO THE EXISTING STRUCTURE NOT OUTLINED IN THE STRUCTURAL PLANS SHALL REQUIRE APPROVAL OF THE ENINEER.

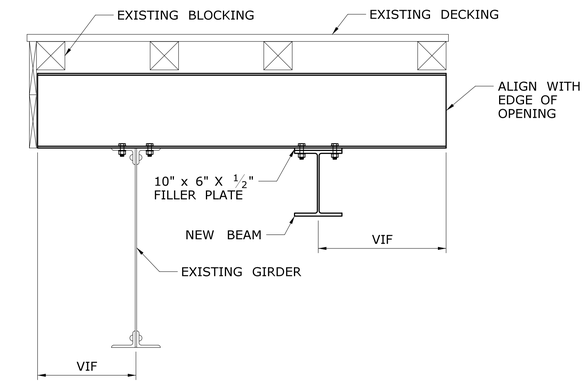

3 - SECTION

SCALE: ¾" = 1'-0"

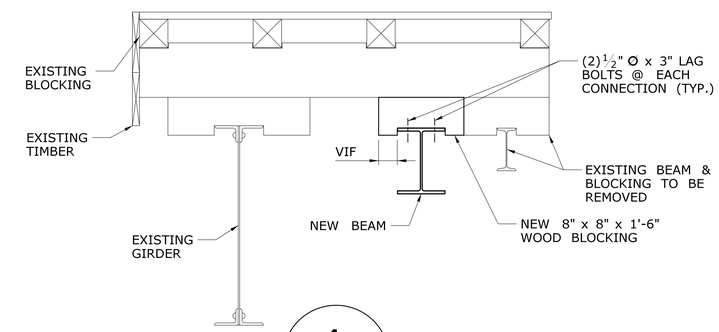

4 - SECTION

SCALE: ¾" = 1'-0"

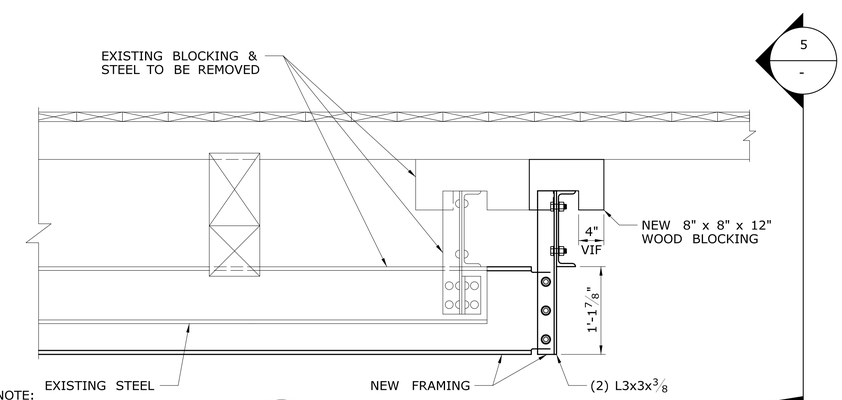

NOTE:
CONNECTION IS TYPICAL FOR ALL FRAME CORNERS.

1 - SECTION

SCALE: 1" = 1'-0"

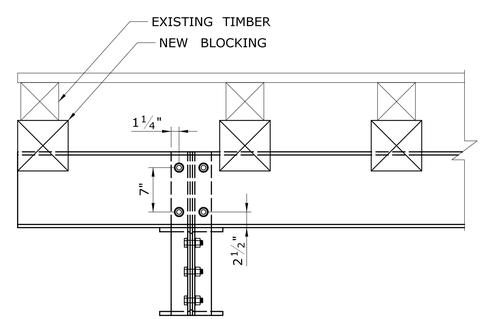

5 - VIEW

SCALE: 1" = 1'-0"

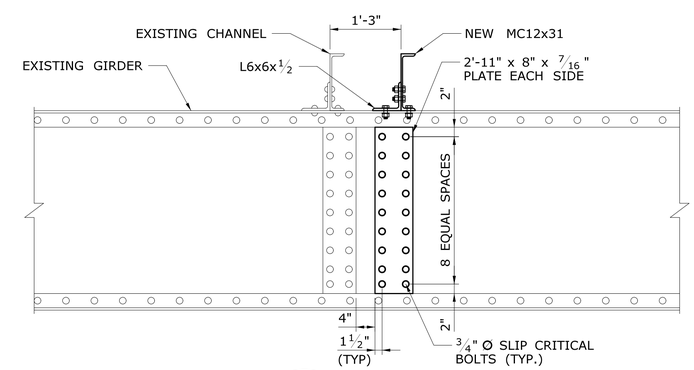

2 - SECTION

SCALE: ¾" = 1'-0"

REV.	DATE	REVISION DESCRIPTION	SHEET NO.

THE INFORMATION, INCLUDING ESTIMATED QUANTITIES OF WORK, SHOWN ON THESE SHEETS IS BASED ON LIMITED INVESTIGATIONS BY THE STATE AND IS IN NO WAY WARRANTED TO INDICATE THE CONDITIONS OF ACTUAL QUANTITIES OF WORK WHICH WILL BE REQUIRED.

Plotted Date: 9/25/2014

DESIGNER/DRAFTER: J POPOLI
CHECKED BY: H BUI
SCALE AS NOTED

STATE OF CONNECTICUT
DEPARTMENT OF TRANSPORTATION

Filename: ...\FA_CGR_CPS_0170-2296_063_05_FST_301.dgn

SIGNATURE/BLOCK:

STATE OF CONNECTICUT DAVID K. STAHL No. 12778 LICENSED PROFESSIONAL ENGINEER

TranSystems
530 PRESTON AVENUE
MERIDEN, CT 06450

PROJECT TITLE:
NEW HAVEN - HARTFORD SPRINGFIELD RAIL CORRIDOR

TOWN: HARTFORD

DRAWING TITLE: FRAMING DETAILS 2

PROJECT NO. 170-3261
DRAWING NO. FST-301
SHEET NO. 12.007

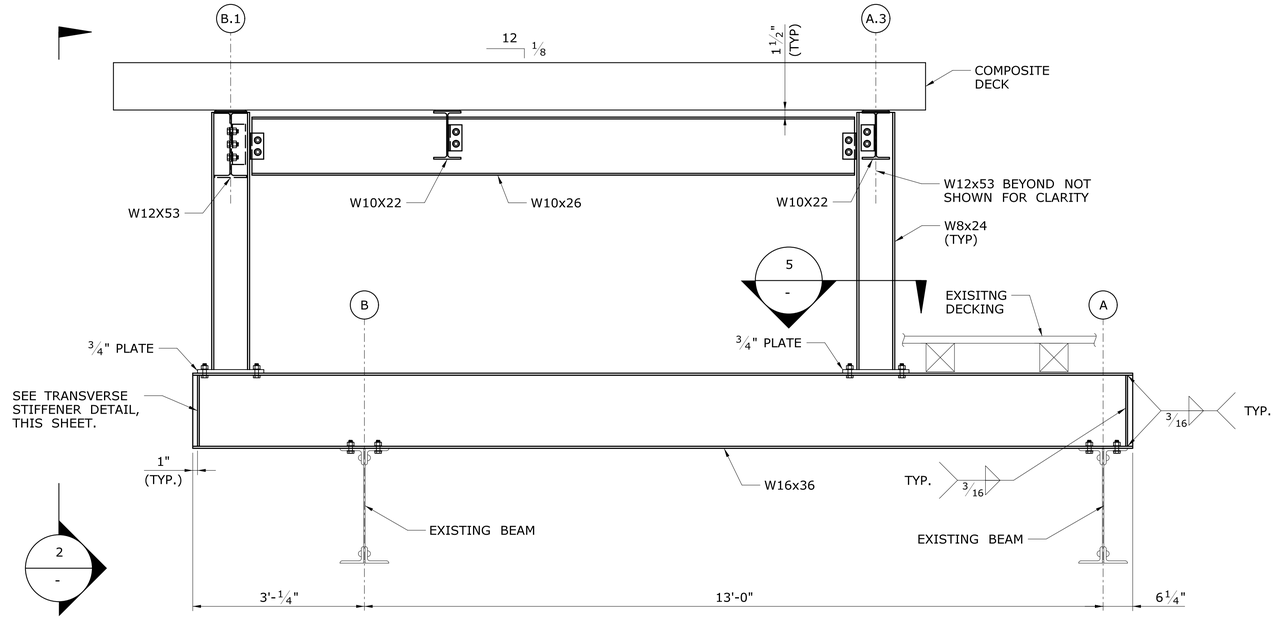

1 / FST-100 SECTION
SCALE: 3/4" = 1'-0"

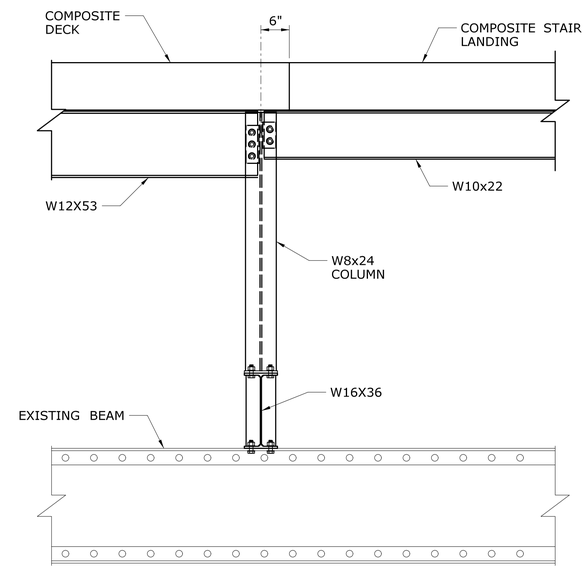

2 / - SECTION
SCALE: 3/4" = 1'-0"

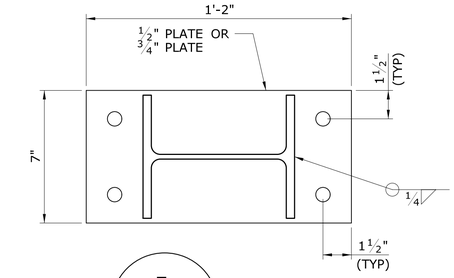

5 / - SECTION
SCALE: 3" = 1'-0"

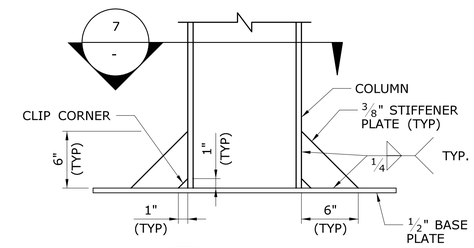

6 / - DETAIL
SCALE: 1 1/2" = 1'-0"

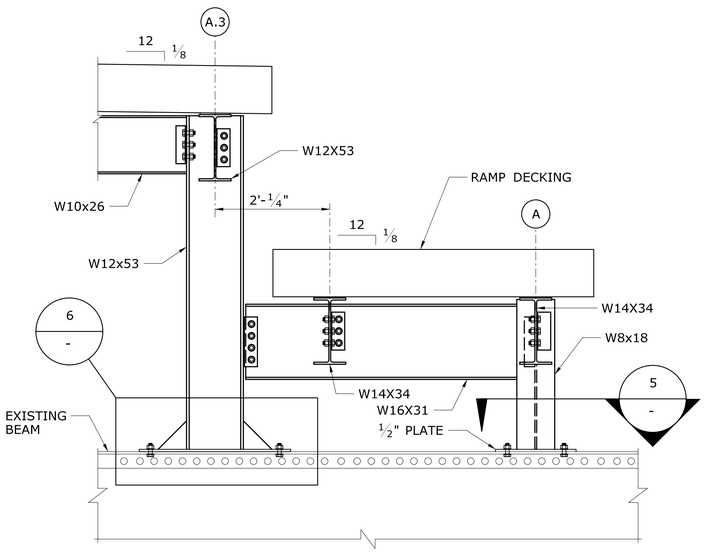

3 / FST-100 SECTION
SCALE: 3/4" = 1'-0"

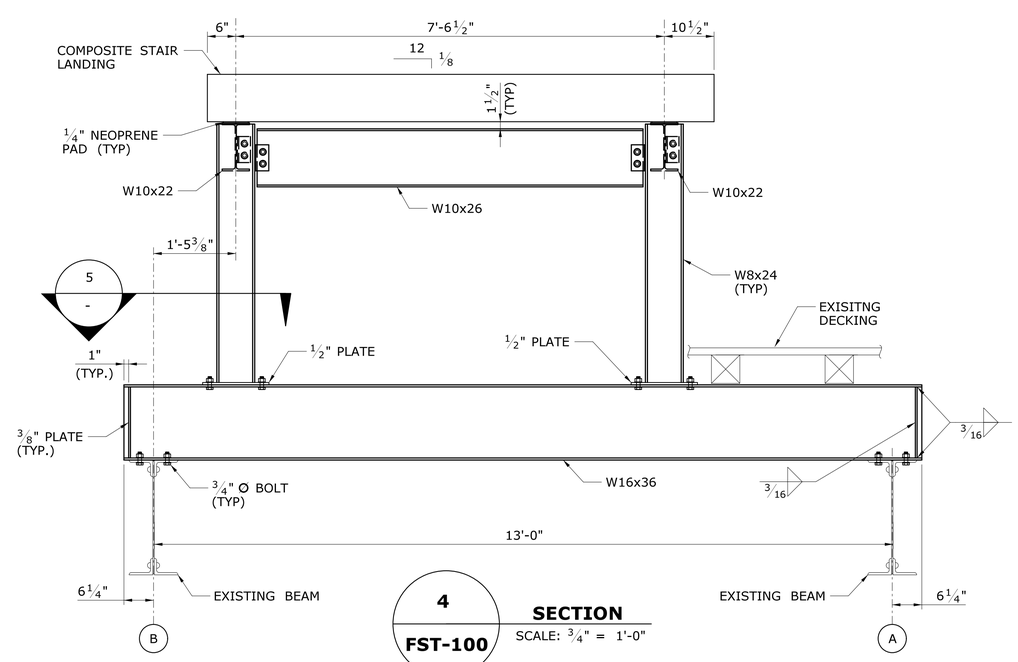

4 / FST-100 SECTION
SCALE: 3/4" = 1'-0"

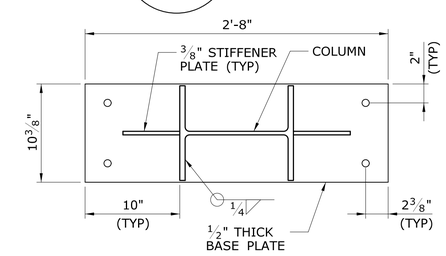

7 / - SECTION
SCALE: 1 1/2" = 1'-0"

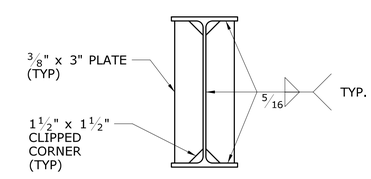

TRANSVERSE STIFFENER DETAIL
SCALE: 1 1/2" = 1'-0"

REV.	DATE	REVISION DESCRIPTION	SHEET NO.

THE INFORMATION, INCLUDING ESTIMATED QUANTITIES OF WORK, SHOWN ON THESE SHEETS IS BASED ON LIMITED INVESTIGATIONS BY THE STATE AND IS IN NO WAY WARRANTED TO INDICATE THE CONDITIONS OF ACTUAL QUANTITIES OF WORK WHICH WILL BE REQUIRED.

Plotted Date: 9/25/2014

DESIGNER/DRAFTER: J POPOLI
CHECKED BY: H BUI
SCALE AS NOTED

STATE OF CONNECTICUT
DEPARTMENT OF TRANSPORTATION

Filename: ...\FA_CGR_CPS_0170-2296_063_05_FST_302.dgn

SIGNATURE/BLOCK:
STATE OF CONNECTICUT DONALD K. STEWART No. 12778 LICENSED PROFESSIONAL ENGINEER

TranSystems
530 PRESTON AVENUE
MERIDEN, CT 06450

PROJECT TITLE:
NEW HAVEN - HARTFORD SPRINGFIELD RAIL CORRIDOR

TOWN: HARTFORD

DRAWING TITLE: FRAMING DETAILS 3

PROJECT NO. 170-3261
DRAWING NO. FST-302
SHEET NO. 12.008

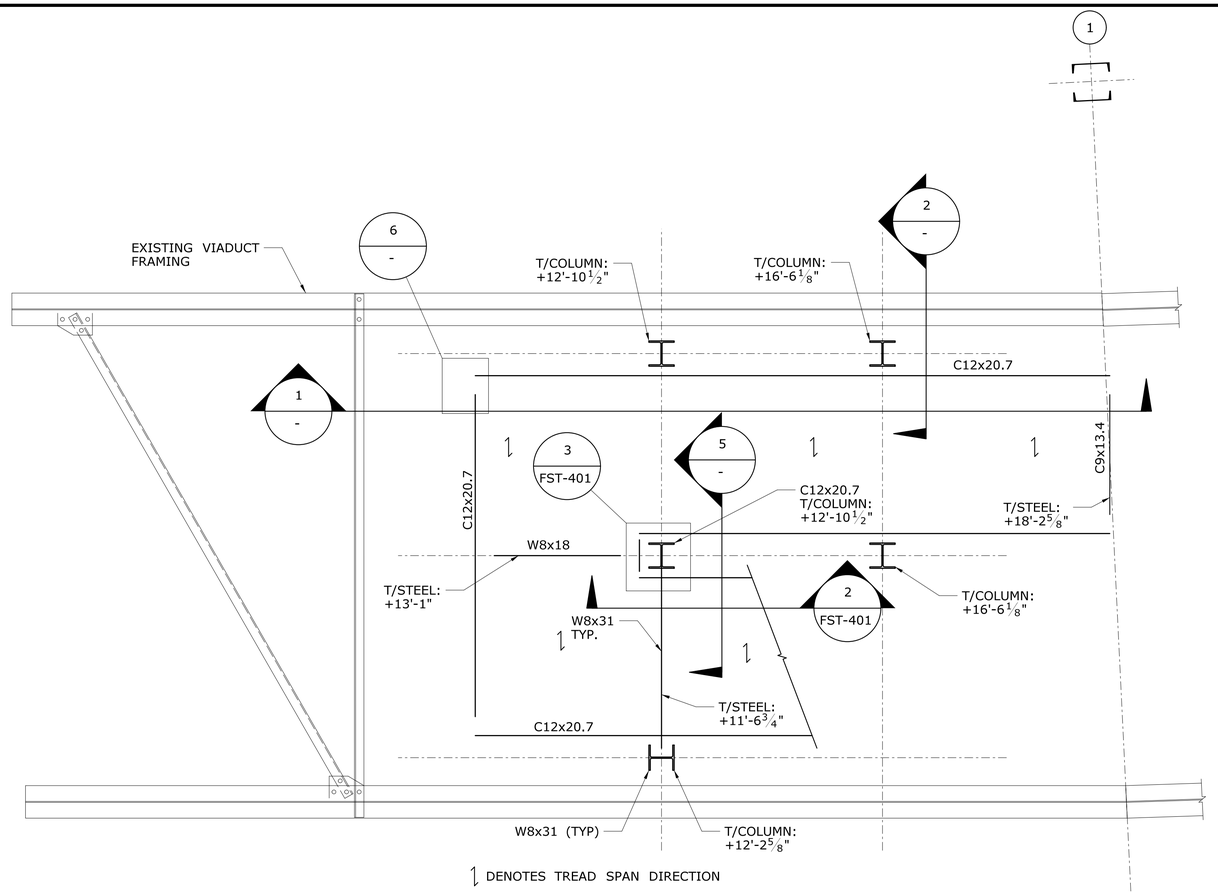

UPPER LEVEL STAIR LANDING

SCALE: 1/2" = 1'-0"

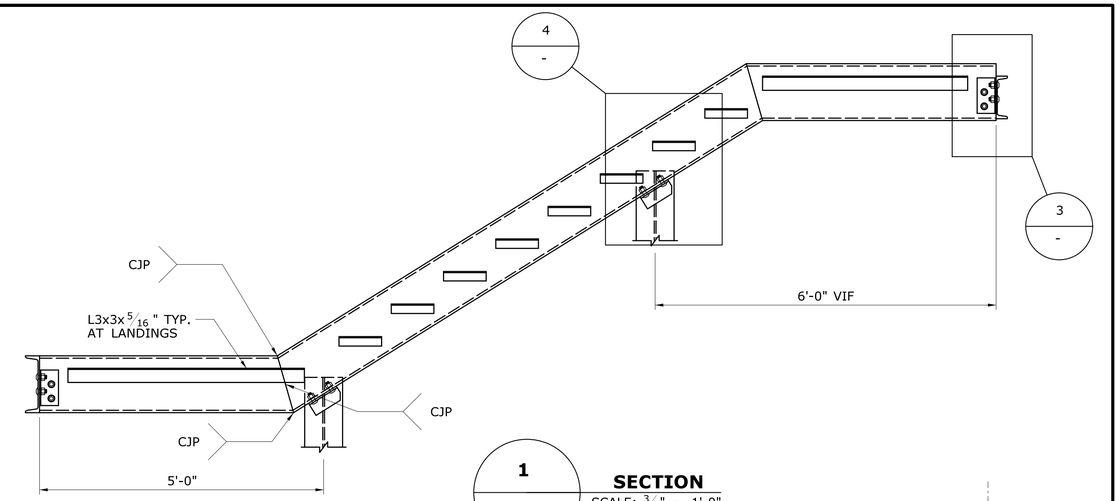

1 - SECTION
SCALE: 3/4" = 1'-0"

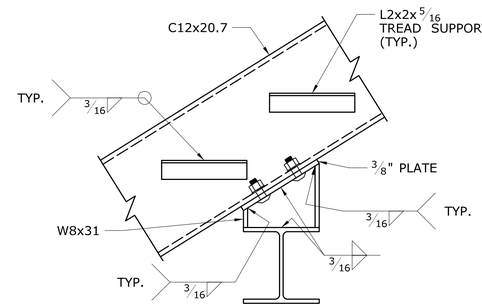

9 - FST-401 DETAIL
SCALE: 1 1/2" = 1'-0"

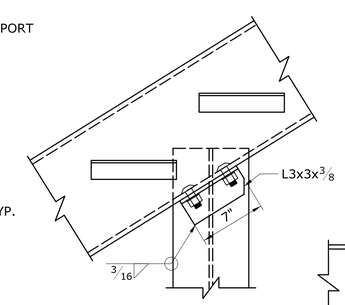

4 - DETAIL
SCALE: 1 1/2" = 1'-0"

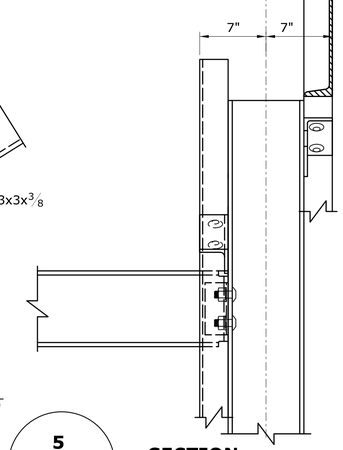

5 - SECTION
SCALE: 1 1/2" = 1'-0"

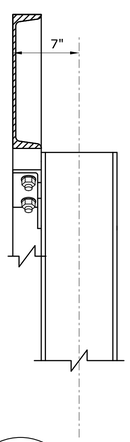

2 - SECTION
SCALE: 1 1/2" = 1'-0"

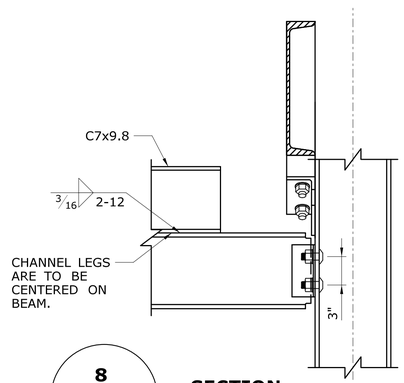

8 - FST-401 SECTION
SCALE: 1 1/2" = 1'-0"

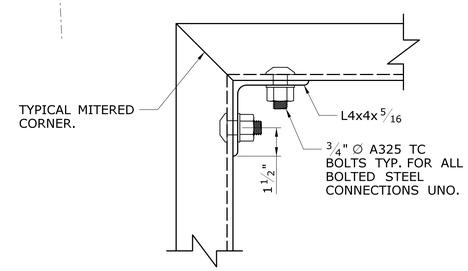

6 - DETAIL
SCALE: 3" = 1'-0"

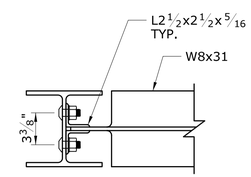

7 - FST-401 DETAIL
SCALE: 1-1/2" = 1'-0"

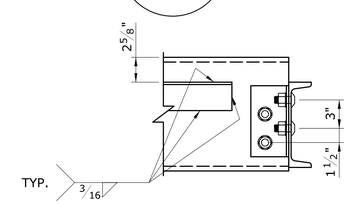

NOTE: DETAIL SIMILAR FOR ALL MITERED CHANNEL CONNECTIONS.

3 - DETAIL
SCALE: 1 1/2" = 1'-0"

REV.	DATE	REVISION DESCRIPTION	SHEET NO.

THE INFORMATION, INCLUDING ESTIMATED QUANTITIES OF WORK, SHOWN ON THESE SHEETS IS BASED ON LIMITED INVESTIGATIONS BY THE STATE AND IS IN NO WAY WARRANTED TO INDICATE THE CONDITIONS OF ACTUAL QUANTITIES OF WORK WHICH WILL BE REQUIRED.

Plotted Date: 9/25/2014

DESIGNER/DRAFTER: J POPOLI
CHECKED BY: H BUI
SCALE AS NOTED

STATE OF CONNECTICUT
DEPARTMENT OF TRANSPORTATION

Filename: ...\FA_CGR_CPS_0170-2296_063_05_FST_400.dgn

SIGNATURE/ BLOCK:

STATE OF CONNECTICUT HOWARD STANLEY KNAPP No. 12772 LICENSED PROFESSIONAL ENGINEER

TranSystems
530 PRESTON AVENUE
MERIDEN, CT 06450

PROJECT TITLE:
NEW HAVEN - HARTFORD SPRINGFIELD RAIL CORRIDOR

TOWN: HARTFORD

DRAWING TITLE:
EGRESS STAIRS DETAILS 1

PROJECT NO. 170-3261
DRAWING NO. FST-400
SHEET NO. 12.009

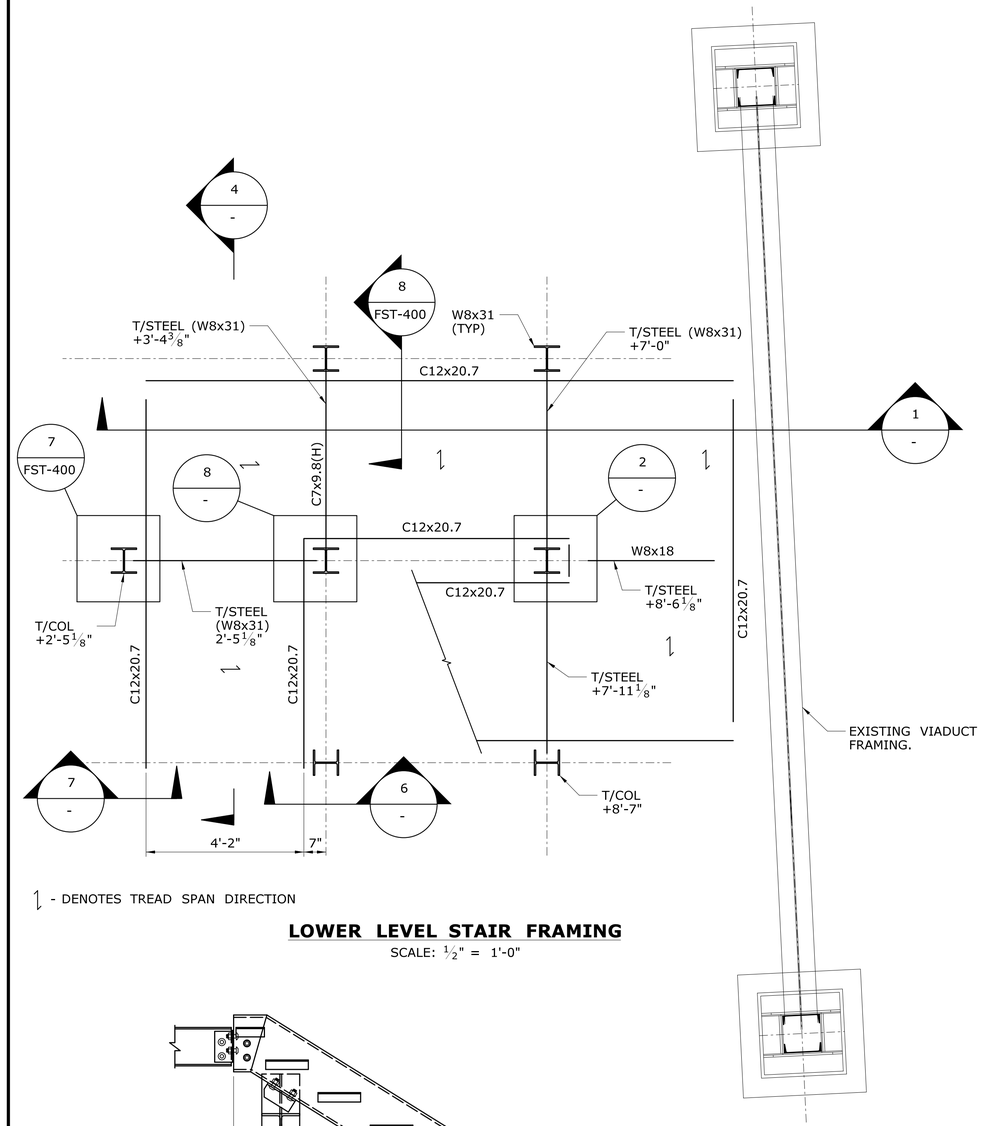

1 - DENOTES TREAD SPAN DIRECTION

LOWER LEVEL STAIR FRAMING

SCALE: 1/2" = 1'-0"

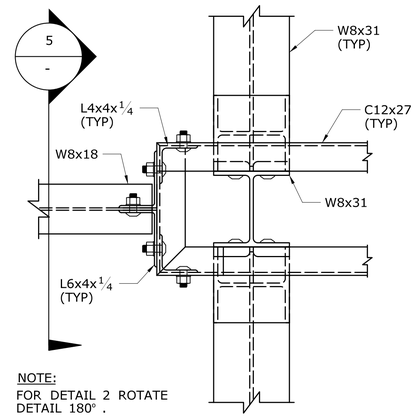

NOTE:
FOR DETAIL 2 ROTATE DETAIL 180° .

2 - 3 FST-400 **DETAIL**

SCALE: 1 1/2" = 1'-0"

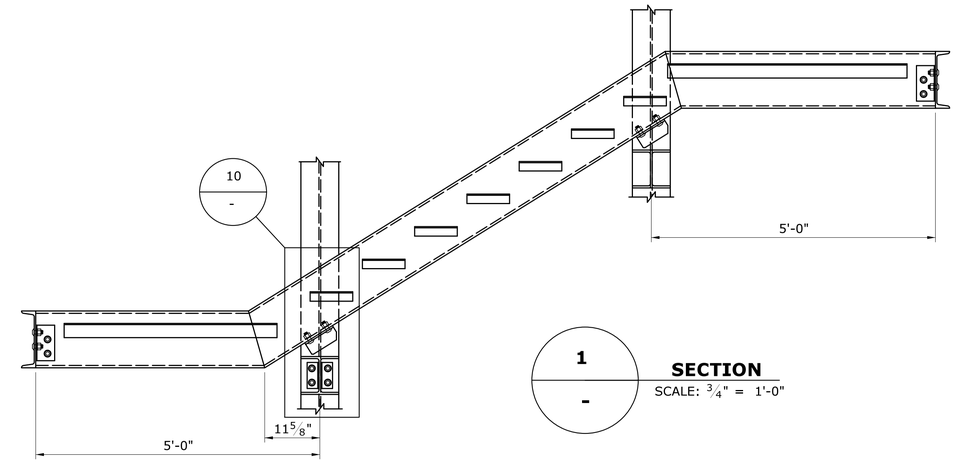

1 - **SECTION**

SCALE: 3/4" = 1'-0"

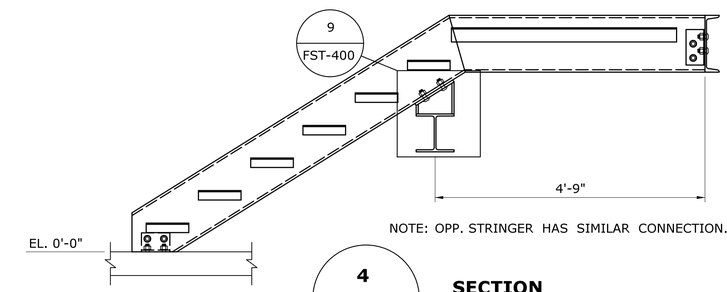

NOTE: OPP. STRINGER HAS SIMILAR CONNECTION.

4 - **SECTION**

SCALE: 3/4" = 1'-0"

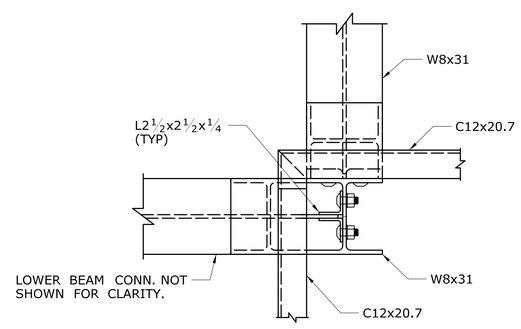

8 - **DETAIL**

SCALE: 1 1/2" = 1'-0"

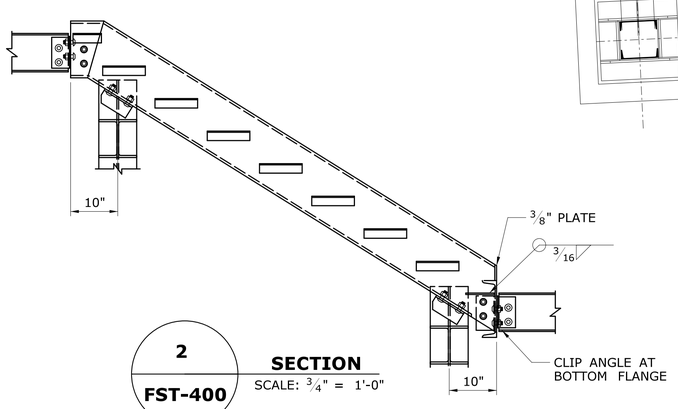

2 - FST-400 **SECTION**

SCALE: 3/4" = 1'-0"

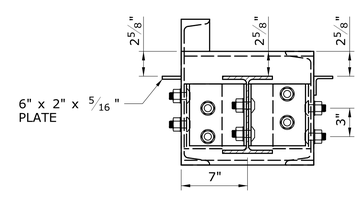

5 - **SECTION**

SCALE: 1 1/2" = 1'-0"

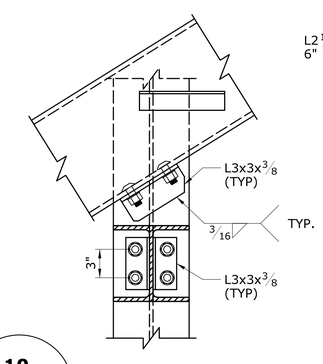

10 - **DETAIL**

SCALE: 1 1/2" = 1'-0"

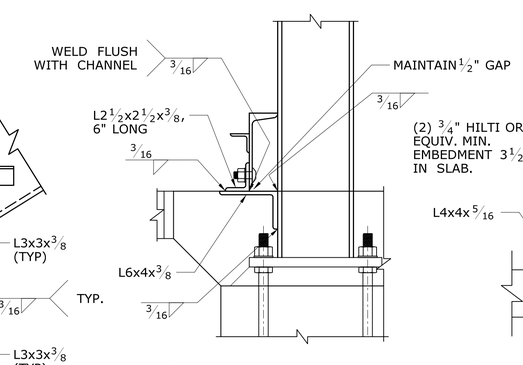

6 - **SECTION**

SCALE: 1 1/2" = 1'-0"

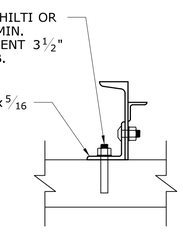

7 - **SECTION**

SCALE: 1 1/2" = 1'-0"

REV.	DATE	REVISION DESCRIPTION	SHEET NO.

THE INFORMATION, INCLUDING ESTIMATED QUANTITIES OF WORK, SHOWN ON THESE SHEETS IS BASED ON LIMITED INVESTIGATIONS BY THE STATE AND IS IN NO WAY WARRANTED TO INDICATE THE CONDITIONS OF ACTUAL QUANTITIES OF WORK WHICH WILL BE REQUIRED.

Plotted Date: 9/25/2014

DESIGNER/DRAFTER: J POPOLI
CHECKED BY: H BUI
SCALE AS NOTED

STATE OF CONNECTICUT
DEPARTMENT OF TRANSPORTATION

Filename: ...\FA..CGR..CPS..0170-2296..063...05..FST...401.dgn

SIGNATURE/BLOCK:

TranSystems
530 PRESTON AVENUE
MERIDEN, CT 06450

PROJECT TITLE:
NEW HAVEN - HARTFORD
SPRINGFIELD
RAIL CORRIDOR

TOWN: HARTFORD

DRAWING TITLE: EGRESS STAIRS DETAILS 2

PROJECT NO. 170-3261
DRAWING NO. FST-401
SHEET NO. 12.010

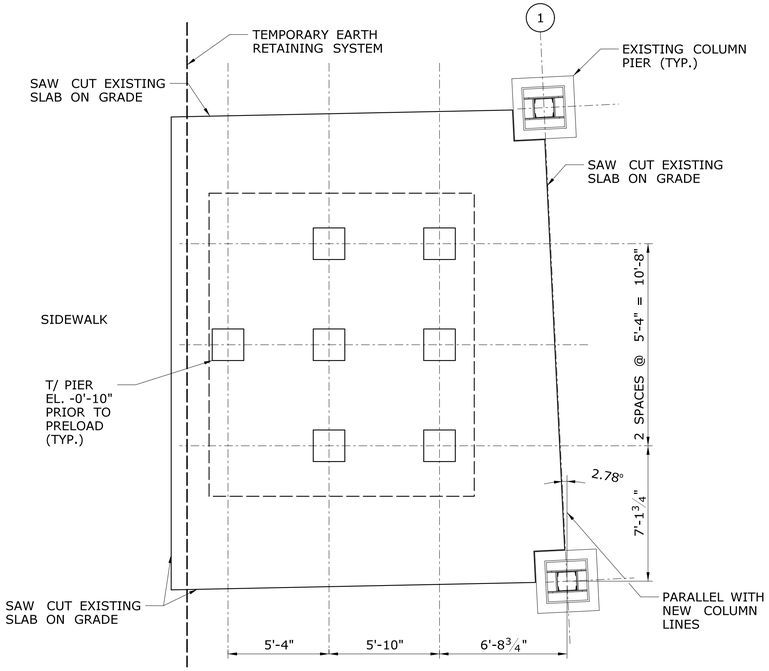

EGRESS STAIRS FOUNDATION PLAN

SCALE: ¼" = 1'-0"

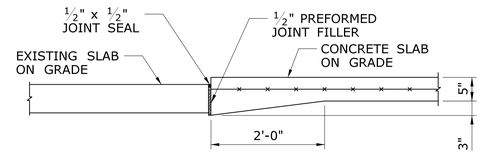

TYPICAL SLAB ON GRADE PERIMETER DETAIL @ SLAB

SCALE: ¾" = 1'-0"

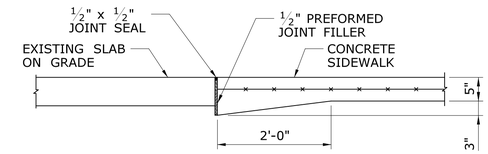

TYPICAL SLAB ON GRADE PERIMETER DETAIL @ SIDEWALK

SCALE: ¾" = 1'-0"

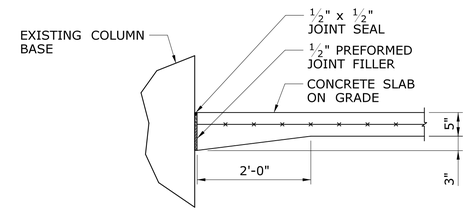

TYPICAL SLAB ON GRADE PERIMETER DETAIL @ COLUMN

SCALE: ¾" = 1'-0"

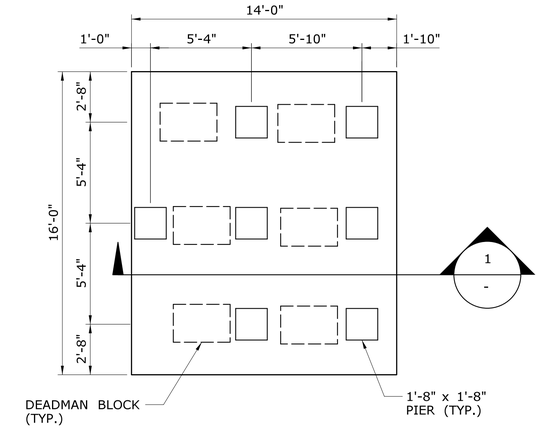

EGRESS STAIRS FOOTING PRELOAD PLAN

SCALE: ¼" = 1'-0"

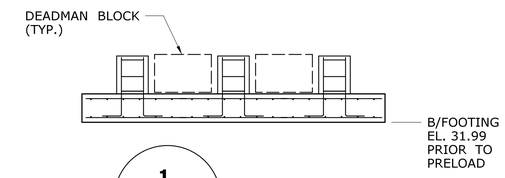

1 / - **SECTION**

SCALE: ¼" = 1'-0"

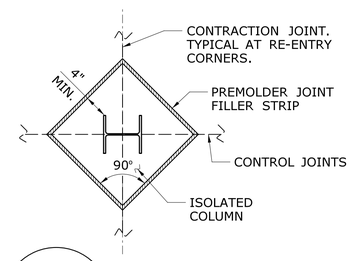

2 / - **SECTION**

SCALE: ¾" = 1'-0"

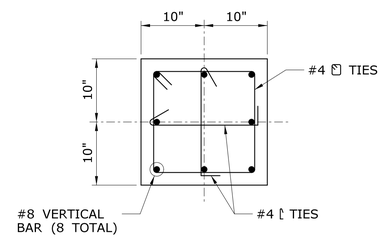

PLAN - TYPICAL PIER

SCALE: 1" = 1'-0"

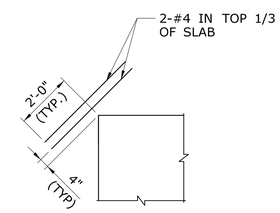

TYPICAL SLAB DETAIL @ CORNER

SCALE: ⅜" = 1'-0"

GENERAL NOTE:

1. ALL ELEVATIONS ARE BASED ON AN ASSUMED VERTICAL DATUM AT T/ SLAB EL. 0'-0" (EL. 35.49, TO BE VERIFIED).

STAIR FOOTING PRELOAD NOTES

NOTES:

1. THE FOOTING MUST BE PRELOADED BEFORE STEEL ERECTION DUE TO THE HIGH SETTLEMENT POTENTIAL OF THE SOIL.
2. THE CONTRACTOR IS TO ENSURE THAT ALL APPRECIABLE SETTLEMENT WILL HAVE SUBSIDED PRIOR TO STEEL CONSTRUCTION.
3. THE CONTRACTOR MAY PROVIDE METHODS OF FOOTING PRELOAD OTHER THAN THOSE DESCRIBED.
4. DEFORMATION MONITORING POINTS SHALL BE PLACED ON THE FOOTING IN THE PRESCRIBED LOCATIONS AND SHALL BE MADE OF A TYPE TO ALLOW ACCURATE MEASUREMENTS.

CONSTRUCTION NOTES:

1. SAWCUT AND REMOVE THE EXISTING SLAB ON GRADE IN THE AREA OF THE NEW STAIR. THE LOCATION OF THE SAWCUT IS AT THE DISCRETION OF THE CONTRACTOR TO ENSURE PROPER FOOTING CONSTRUCTION GIVEN THE SITE CONDITIONS.
2. EXCAVATE AND POUR THE FOOTING AND PIERS AS SHOWN.
3. THE FOOTING IS TO BE PRELOADED WITH 600 PSF EVENLY DISTRIBUTED THOUGHOUT.
4. THE SETTLEMENT OF THE FOOTING IS TO BE MEASURED AT FIVE POINTS (EACH CORNER AND THE CENTER) EVERY TWO DAYS UNTIL NO APPRECIABLE SETTLEMENT (≤1/16") IS FOUND FOR A MINIMUM PERIOD OF TWO WEEKS.
5. ONCE THERE IS NO ADDITIONAL SETTLEMENT OF THE FOOTING, CONSTRUCTION OF THE STEEL FRAMING CAN COMMENCE.

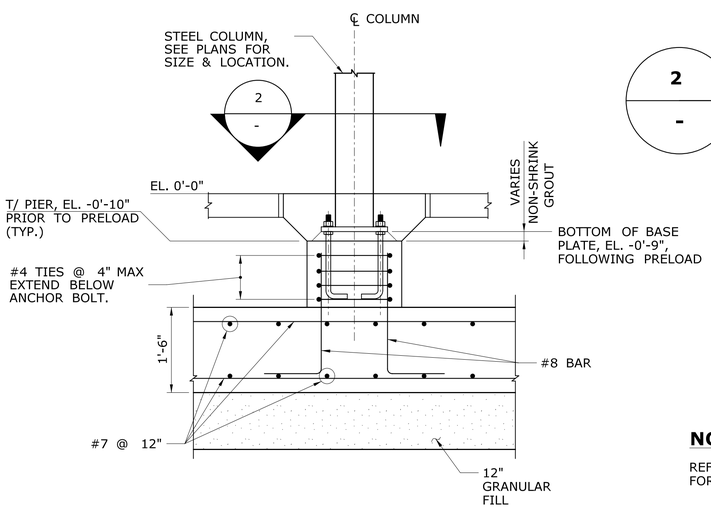

TYPICAL PIER DETAIL

SCALE: ¾" = 1'-0"

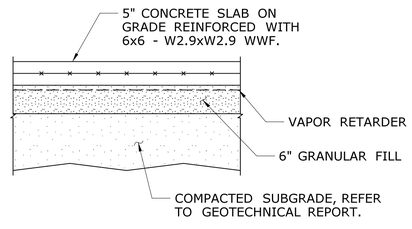

NOTE:

REFER TO GENERAL NOTE, GEOTECHNICAL REPORT AND SPECIFICATIONS FOR ADDITIONAL NOTES AND REQUIREMENT.

TYPICAL SLAB ON GRADE DETAIL

SCALE: ¾" = 1'-0"

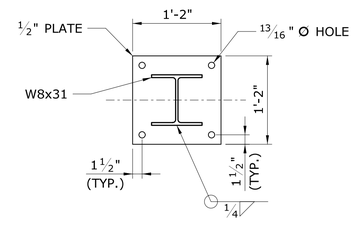

BASEPLATE DETAIL

SCALE: 1" = 1'-0"

REV.	DATE	REVISION DESCRIPTION	SHEET NO.

THE INFORMATION, INCLUDING ESTIMATED QUANTITIES OF WORK, SHOWN ON THESE SHEETS IS BASED ON LIMITED INVESTIGATIONS BY THE STATE AND IS IN NO WAY WARRANTED TO INDICATE THE CONDITIONS OF ACTUAL QUANTITIES OF WORK WHICH WILL BE REQUIRED.

Plotted Date: 9/25/2014

DESIGNER/DRAFTER: J POPOLI
CHECKED BY: H BUI
SCALE AS NOTED

STATE OF CONNECTICUT
DEPARTMENT OF TRANSPORTATION

Filename: ...\FA..CGR..CPS..0170-2296..063...05..FST...500.dgn

SIGNATURE/BLOCK:

TranSystems
530 PRESTON AVENUE
MERIDEN, CT 06450

PROJECT TITLE: NEW HAVEN - HARTFORD SPRINGFIELD RAIL CORRIDOR

TOWN: HARTFORD

DRAWING TITLE: EGRESS STAIRS FOUNDATION DETAILS

PROJECT NO. 170-3261
DRAWING NO. FST-500
SHEET NO. 12.011

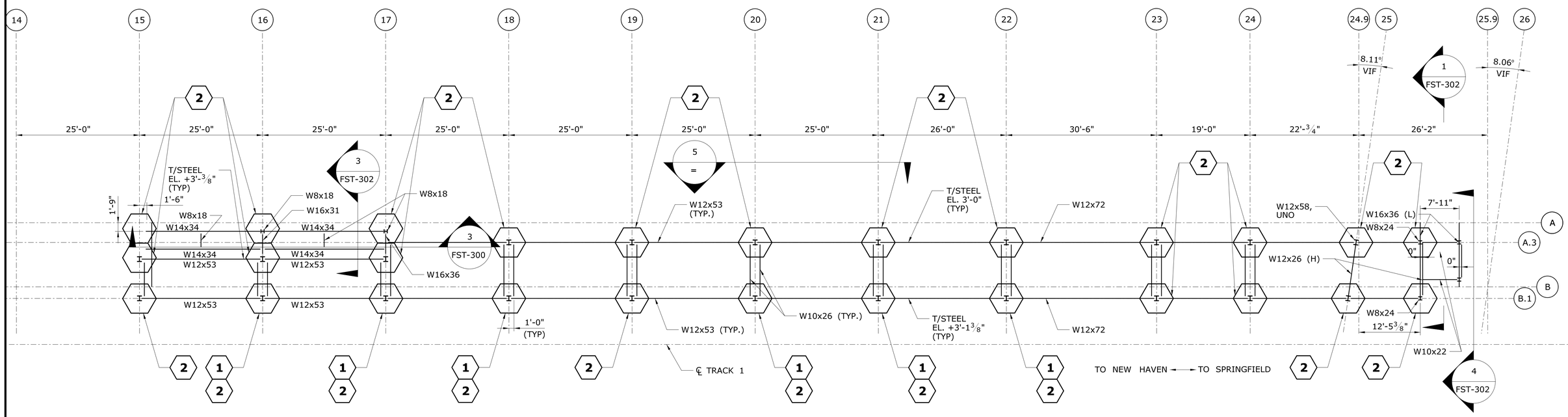

REPAIR EXISTING BENT FLANGE LOCATION PLAN

SCALE: 1" = 10'

NOTES:

1. TOP OF RAIL, DATUM ELEVATION = 0'-0"
2. T/STEEL EL. +3'-0" ALONG COLUMN A.3
3. T/STEEL EL. +3'-1 3/8" ALONG COLUMN B.1

1 = REPAIR LOCATION AND TYPE 1 REPAIR: REPAIR DETERIORATED TOP FLANGE. SEE DETAILS ON DWG. FST-601 AND FST-602

2 = REPAIR LOCATION AND TYPE 2 REPAIR: INSTALL NEW WEB STIFFENER ANGLES AND GIRDERS. SEE DETAILS ON DWG. FST-601.

NOTICE TO CONTRACTOR:

ALL WORK INDICATED ON THIS DRAWING WILL BE DONE BY AMTRAK WITH THE EXCEPTION OF THE COLUMNS AND BASE PLATE CONNECTIONS DETAILED ON FST-302 WHICH WILL BE DONE BY THE CONTRACTOR. THIS DRAWING IS BEING PROVIDED FOR YOUR INFORMATION ONLY.

REV.	DATE	REVISION DESCRIPTION	SHEET NO.
-	-	-	-
-	-	-	-
-	-	-	-
-	-	-	-
-	-	-	-
-	-	-	-

THE INFORMATION, INCLUDING ESTIMATED QUANTITIES OF WORK, SHOWN ON THESE SHEETS IS BASED ON LIMITED INVESTIGATIONS BY THE STATE AND IS IN NO WAY WARRANTED TO INDICATE THE CONDITIONS OF ACTUAL QUANTITIES OF WORK WHICH WILL BE REQUIRED.

Plotted Date: 8/21/2014

DESIGNER/DRAFTER: JW/MC

CHECKED BY:

SCALE AS NOTED

STATE OF CONNECTICUT
DEPARTMENT OF TRANSPORTATION

Filename: ...\FA..CGR..CPS..0170-2296..063...05..FST...600.dgn

SIGNATURE/BLOCK:

STV Incorporated
80 Ferry Boulevard
Stratford, CT 06615

PROJECT TITLE:

NEW HAVEN - HARTFORD SPRINGFIELD RAIL CORRIDOR

TOWN: **HARTFORD**

DRAWING TITLE: **PLATFORM REPAIR LOCATION PLAN**

PROJECT NO. **170-3261**

DRAWING NO. **FST-600**

SHEET NO. **12.012**

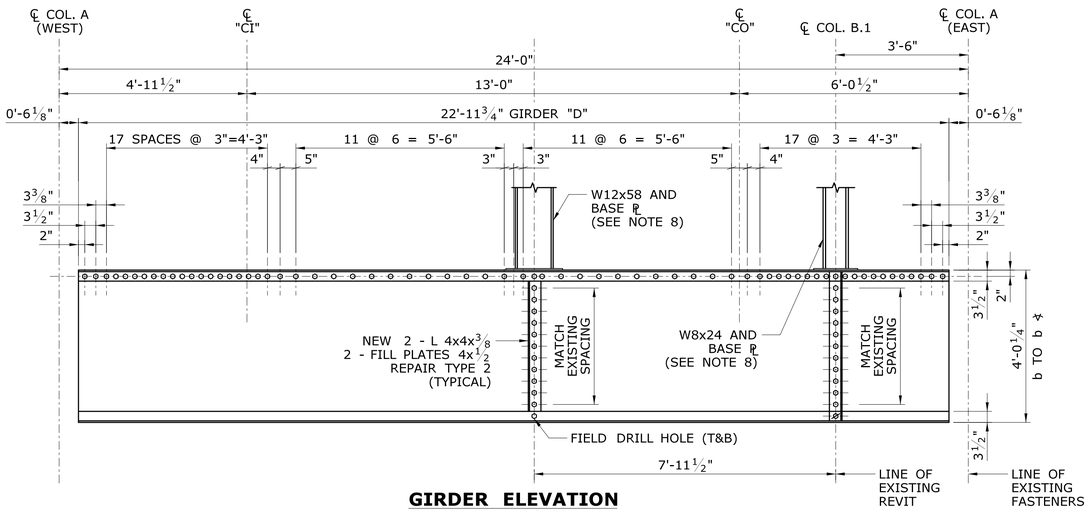

GIRDER ELEVATION
BENT NO. 15
SCALE: 1/2" = 1'-0"

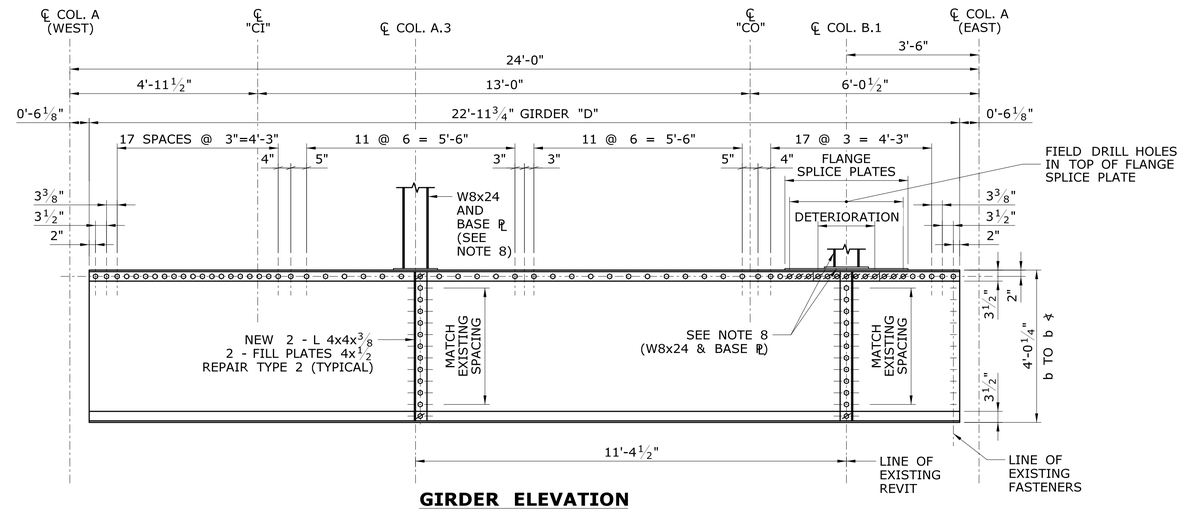

GIRDER ELEVATION
BENT NOS. 18, 20, & 21
SCALE: 1/2" = 1'-0"

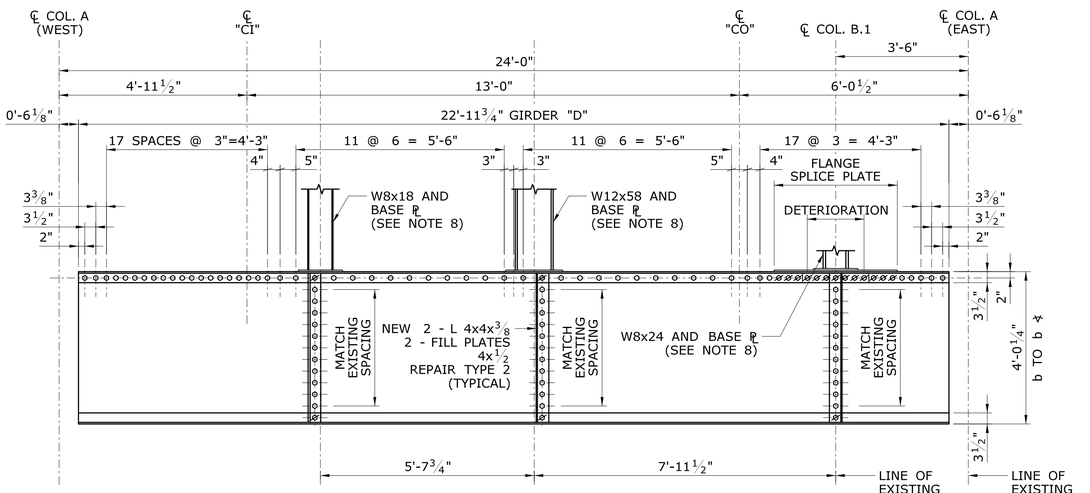

GIRDER ELEVATION
BENT NO. 16 & 17
SCALE: 1/2" = 1'-0"

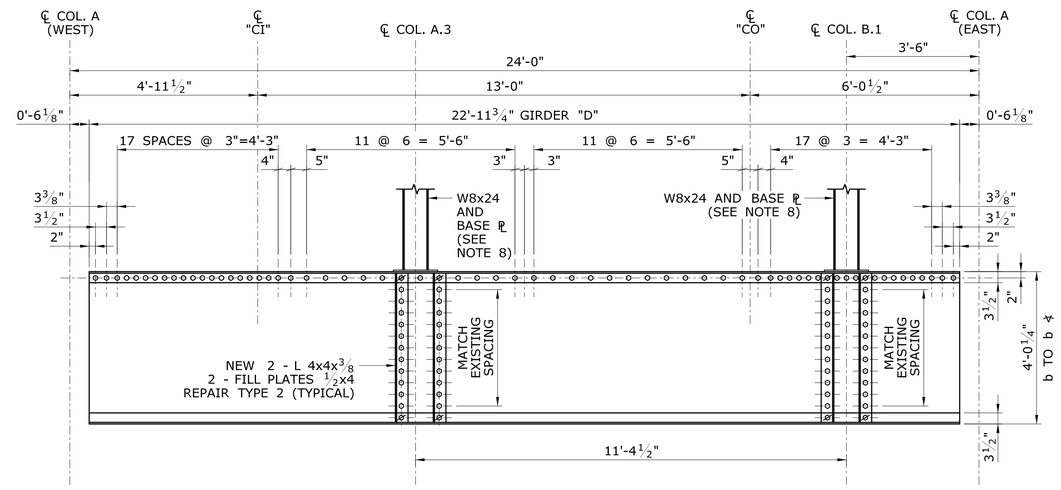

GIRDER ELEVATION
BENT NO. 19
SCALE: 1/2" = 1'-0"

NOTES:

1. MINIMUM EDGE DISTANCE IS 1½ INCHES.
2. WHEN REMOVING EXISTING ANGLE, DO NOT GOUGE EXISTING WEB PLATE.
3. EXISTING STEEL SHALL BE CLEANED TO 6 INCHES BEYOND REPAIR AREA, INCLUDING EXISTING TOP FLANGE LENGTH WHICH WILL CONNECT WITH NEW SPLICE PLATE.
4. FASTENERS IN WEB LEG OF ANGLE SHALL BE INSTALLED IN EXISTING HOLES.
5. FASTENERS IN SPLICE PLATE OF TOP FLANGE SHALL BE IN FIELD DRILLED HOLES.
6. FASTENER SPACING IN TOP FLANGE SPLICE PLATE IS TO MATCH SPACING OF EXISTING FASTENERS ALONG WEB.
7. CONTRACTOR SHALL VERIFY ALL DIMENSIONS (INCLUDING FASTENER SPACING) IN FIELD BEFORE SUBMITTING WORKING DRAWINGS TO ENGINEER.
8. SEE DWG. FST-302 FOR COLUMN AND BASE PLATE DETAILS.
9. ALL GIRDER ELEVATIONS ARE ORIENTED LOOKING NORTH.
10. INSTALL LAYER OF KOP-COAT A-708 SPLASH ZONE MASTIC, OR APPROVED EQUAL, BETWEEN NEW COLUMN BASE PLATES AND GIRDER TOP FLANGE.

⌀ REMOVED EXISTING FASTENER AND REPLACE WITH NEW ⅞" HS A325 BOLT IN EXISTING HOLES.

○ NEW ⅞" HS A325 BOLT IN NEW FIELD DRILLED HOLE

NOTICE TO CONTRACTOR:

ALL WORK INDICATED ON THIS DRAWING WILL BE DONE BY AMTRAK WITH THE EXCEPTION OF THE COLUMNS AND BASE PLATE CONNECTIONS DETAILED ON FST-302 WHICH WILL BE DONE BY THE CONTRACTOR. THIS DRAWING IS BEING PROVIDED FOR YOUR INFORMATION ONLY.

REV.	DATE	REVISION DESCRIPTION	SHEET NO.
-	-	-	-
-	-	-	-
-	-	-	-
-	-	-	-
-	-	-	-
-	-	-	-

THE INFORMATION, INCLUDING ESTIMATED QUANTITIES OF WORK, SHOWN ON THESE SHEETS IS BASED ON LIMITED INVESTIGATIONS BY THE STATE AND IS IN NO WAY WARRANTED TO INDICATE THE CONDITIONS OF ACTUAL QUANTITIES OF WORK WHICH WILL BE REQUIRED.

Plotted Date: 8/21/2014

DESIGNER/DRAFTER: **JW/MC**
CHECKED BY:
SCALE AS NOTED

STATE OF CONNECTICUT
DEPARTMENT OF TRANSPORTATION

Filename: ...\FA_CGR_CPS_0170-2296_063_ _05_FST_ _601.dgn

SIGNATURE/BLOCK:
STV Incorporated
80 Ferry Boulevard
Stratford, CT 06615

PROJECT TITLE:
NEW HAVEN - HARTFORD SPRINGFIELD RAIL CORRIDOR

TOWN: **HARTFORD**

DRAWING TITLE: **GIRDER REPAIR ELEVATIONS - 1**

PROJECT NO. **170-3261**
DRAWING NO. **FST-601**
SHEET NO. **12.013**

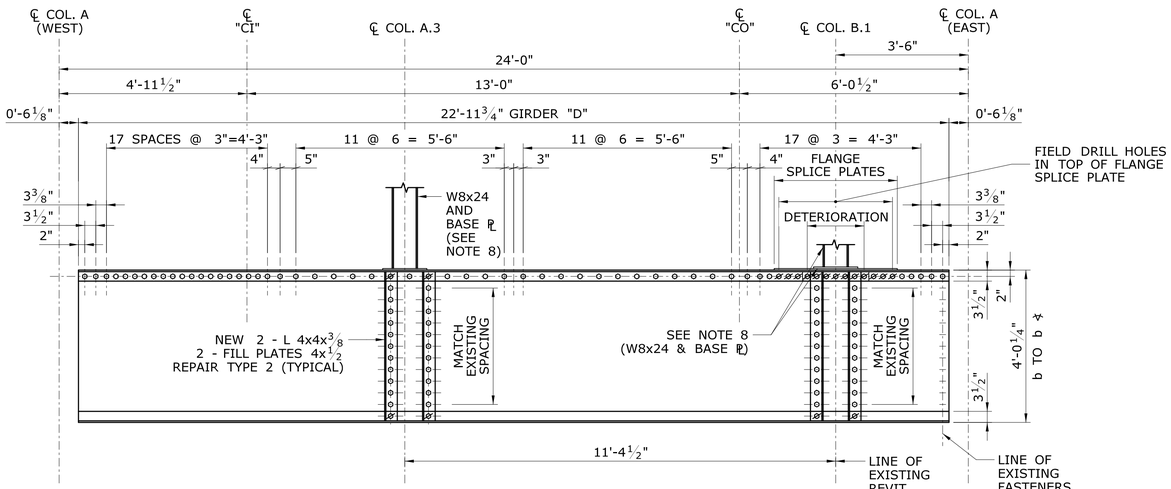

GIRDER ELEVATION
BENT NOS. 22
SCALE: 1/2" = 1'-0"

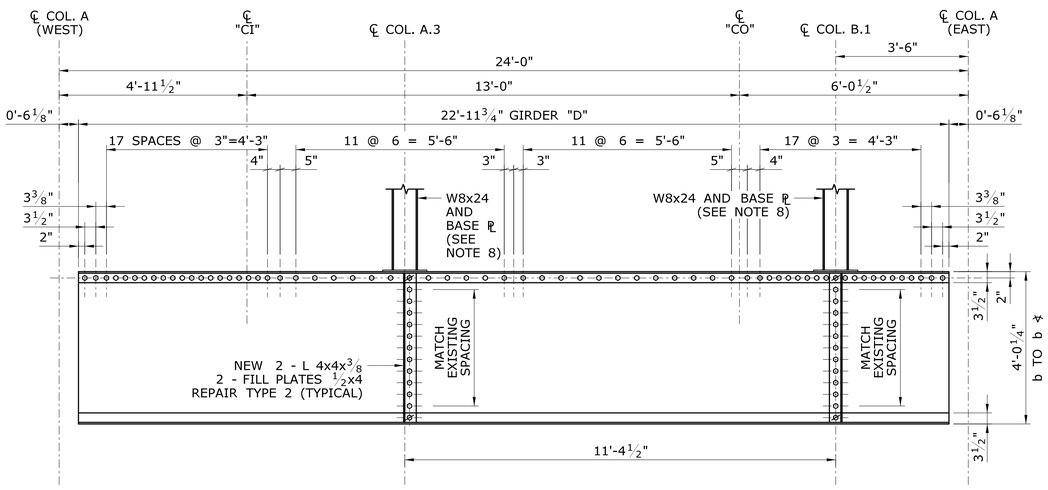

GIRDER ELEVATION
BENT NOS. 23, 24 & 26
(BENT 25 IS SIMILAR)
SCALE: 1/2" = 1'-0"

NOTES:

1. MINIMUM EDGE DISTANCE IS 1½ INCHES.
2. WHEN REMOVING EXISTING ANGLE, DO NOT GOUGE EXISTING WEB PLATE.
3. EXISTING STEEL SHALL BE CLEANED TO 6 INCHES BEYOND REPAIR AREA, INCLUDING EXISTING TOP FLANGE LENGTH WHICH WILL CONNECT WITH NEW SPLICE PLATE.
4. FASTENERS IN WEB LEG OF ANGLE SHALL BE INSTALLED IN EXISTING HOLES.
5. FASTENERS IN SPLICE PLATE OF TOP FLANGE SHALL BE IN FIELD DRILLED HOLES.
6. FASTENER SPACING IN TOP FLANGE SPLICE PLATE IS TO MATCH SPACING OF EXISTING FASTENERS ALONG WEB.
7. CONTRACTOR SHALL VERIFY ALL DIMENSIONS (INCLUDING FASTENER SPACING) IN FIELD BEFORE SUBMITTING WORKING DRAWINGS TO ENGINEER.
8. SEE DWG. FST-302 FOR COLUMN AND BASE PLATE DETAILS.
9. ALL GIRDER ELEVATIONS ARE ORIENTED LOOKING NORTH.
10. INSTALL LAYER OF KOP-COAT A-708 SPLASH ZONE MASTIC, OR APPROVED EQUAL, BETWEEN NEW COLUMN BASE PLATES AND GIRDER TOP FLANGE.

⌀ REMOVED EXISTING FASTENER AND REPLACE WITH NEW ⅞" HS A325 BOLT IN EXISTING HOLES.

○ NEW ⅞" HS A325 BOLT IN NEW FIELD DRILLED HOLE

NOTICE TO CONTRACTOR:

ALL WORK INDICATED ON THIS DRAWING WILL BE DONE BY AMTRAK WITH THE EXCEPTION OF THE COLUMNS AND BASE PLATE CONNECTIONS DETAILED ON FST-302 WHICH WILL BE DONE BY THE CONTRACTOR. THIS DRAWING IS BEING PROVIDED FOR YOUR INFORMATION ONLY.

REV.	DATE	REVISION DESCRIPTION	SHEET NO.
-	-	-	-
-	-	-	-
-	-	-	-
-	-	-	-
-	-	-	-
-	-	-	-

THE INFORMATION, INCLUDING ESTIMATED QUANTITIES OF WORK, SHOWN ON THESE SHEETS IS BASED ON LIMITED INVESTIGATIONS BY THE STATE AND IS IN NO WAY WARRANTED TO INDICATE THE CONDITIONS OF ACTUAL QUANTITIES OF WORK WHICH WILL BE REQUIRED.

Plotted Date: 8/21/2014

DESIGNER/DRAFTER: JW/MC
CHECKED BY:
SCALE AS NOTED

STATE OF CONNECTICUT
DEPARTMENT OF TRANSPORTATION

Filename: ...\FA..CGR..CPS..0170-2296..063...05..FST...602.dgn

SIGNATURE/BLOCK:
STV Incorporated
80 Ferry Boulevard
Stratford, CT 06615

PROJECT TITLE:
NEW HAVEN - HARTFORD SPRINGFIELD RAIL CORRIDOR

TOWN: **HARTFORD**

DRAWING TITLE: **GIRDER REPAIR ELEVATIONS - 2**

PROJECT NO. **170-3261**
DRAWING NO. **FST-602**
SHEET NO. **12.014**

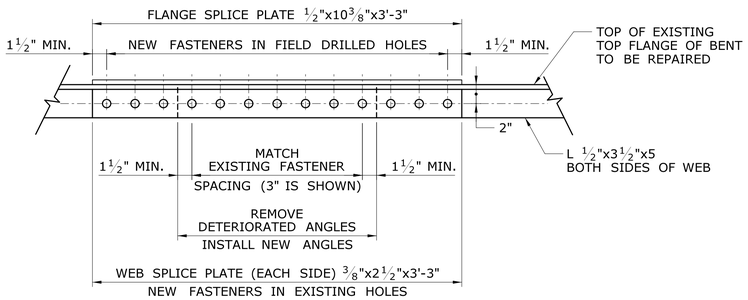

DETAIL - REPAIR TYPE 1

SCALE: 1 1/2" = 1'-0"

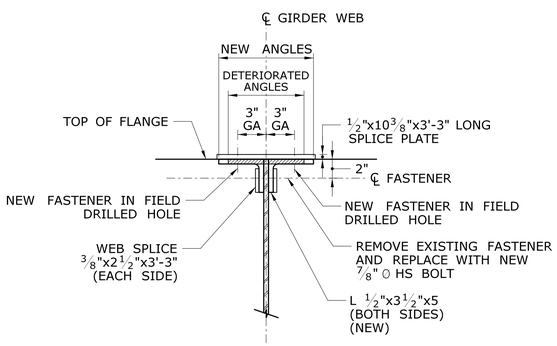

SECTION - REPAIR TYPE 1

SCALE: 1 1/2" = 1'-0"

NOTES:

1. FOR NOTES, LEGEND AND ADDITIONAL REQUIREMENTS, SEE DRAWING FST-601.
2. EXISTING PAINT TO BE REMOVED PRIOR TO REPAIR WORK. AFTER REPAIR WORK IS COMPLETED, NEW STEEL SHALL BE FIELD PAINTED PER SECTION 0603142A - FIELD TOUCH-UP PAINTING, 340.SF.
3. STRUCTURAL STEEL REPAIRS SHALL BE COMPLETED PER SECTION 0603768A - STRUCTURAL STEEL, 4825 LBS, WHICH INCLUDES 570 LBS FOR FASTENERS.

NOTICE TO CONTRACTOR:

ALL WORK INDICATED ON THIS DRAWING WILL BE DONE BY AMTRAK. THIS DRAWING IS BEING PROVIDED FOR YOUR INFORMATION ONLY.

REV.	DATE	REVISION DESCRIPTION	SHEET NO.
-	-	-	-
-	-	-	-
-	-	-	-
-	-	-	-
-	-	-	-
-	-	-	-

THE INFORMATION, INCLUDING ESTIMATED QUANTITIES OF WORK, SHOWN ON THESE SHEETS IS BASED ON LIMITED INVESTIGATIONS BY THE STATE AND IS IN NO WAY WARRANTED TO INDICATE THE CONDITIONS OF ACTUAL QUANTITIES OF WORK WHICH WILL BE REQUIRED.

Plotted Date: 8/21/2014

DESIGNER/DRAFTER: **JW/MC**

CHECKED BY:

SCALE AS NOTED

STATE OF CONNECTICUT
DEPARTMENT OF TRANSPORTATION

Filename: ...\FA..CGR..CPS..0170-2296..063...05..FST...603.dgn

SIGNATURE/ BLOCK:

STV Incorporated
80 Ferry Boulevard
Stratford, CT 06615

PROJECT TITLE:

NEW HAVEN - HARTFORD SPRINGFIELD RAIL CORRIDOR

TOWN: **HARTFORD**

DRAWING TITLE: **REPAIR DETAILS TYPE 1**

PROJECT NO. **170-3261**

DRAWING NO. **FST-603**

SHEET NO. **12.015**