CONNECTICUT DEPARTMENT OF TRANSPORTATION

Plans For

CLINTON RAILROAD STATION - NORTH PLATFORM IMPROVEMENTS AND PEDESTRIAN BRIDGE

Town(s)/City of

CLINTON

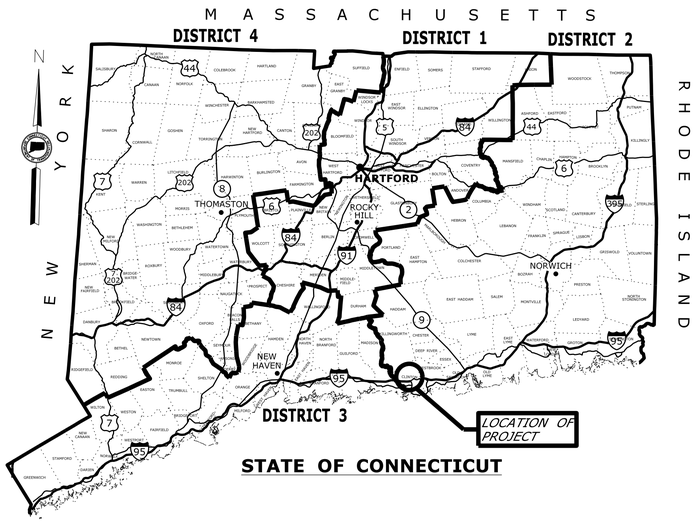

STATE OF CONNECTICUT

STATION PLANS

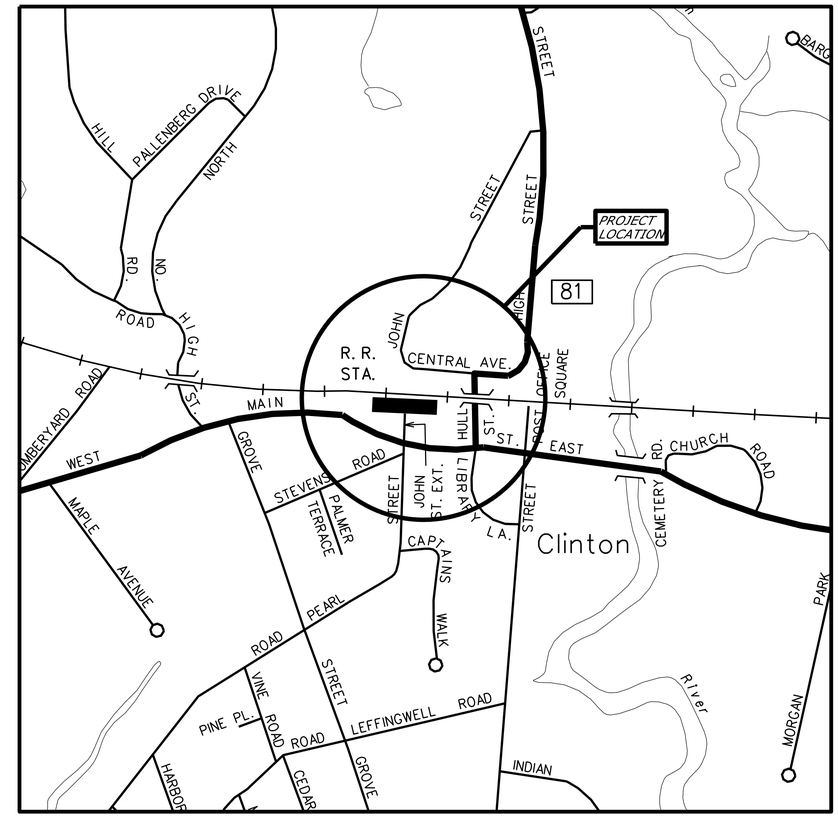

LOCATION PLAN

NOT TO SCALE

GENERAL NOTES:

1. CONSTRUCTION SPECIFICATIONS:
   CONNECTICUT DEPARTMENT OF TRANSPORTATION, STANDARD SPECIFICATIONS FOR ROADS, BRIDGES AND INCIDENTAL CONSTRUCTION, FORM 816, DATED 2004; SUPPLEMENTAL SPECIFICATIONS, DATED JANUARY 2014; AND SPECIAL PROVISIONS
3. 400 FOOT GRID BASED ON CONNECTICUT COORDINATE SYSTEM SYSTEM N.A.D. 1983/2007
4. VERTICAL DATUM BASED ON NAVD 1988

DISCLAIMER

IT IS THE RESPONSIBILITY OF EACH BIDDER AND ALL OTHER INTERESTED PARTIES TO OBTAIN ALL BIDDING RELATED INFORMATION AND DOCUMENTS FROM OFFICIAL SOURCES WITHIN THE DEPARTMENT.

PERSONS AND/OR ENTITIES WHICH REPRODUCE AND/OR MAKE SUCH INFORMATION AVAILABLE BY ANY MEANS ARE NOT AUTHORIZED BY THE DEPARTMENT TO DO SO AND MAY BE LIABLE FOR CLAIMS RESULTING FROM THE DISSEMINATION OF UNOFFICIAL, INCOMPLETE AND/OR INACCURATE INFORMATION.

LIST OF SUBSETS

VOLUME & SUBSET NO.	SUBSET TITLE	*SUBSET SHEET COUNT
01.01	GENERAL	1
01.02	REVISIONS	1
01.03	CIVIL	24
01.04	ARCHITECTURAL	61
01.05	SIGNAGE	12
01.06	STRUCTURAL	41
01.07	ELECTRICAL	16
01.08	ET	5
01.09	ENIVRONMENTAL	2

* THE INITIAL SUBSET SHEET COUNT DOES NOT INCLUDE ADDENDUMS AND CHANGE ORDERS

SUBSET 01 - GENERAL LIST OF DRAWINGS

DRAWING TITLE	DRAWING NO.
COVER SHEET	G-001

STANDARD CONVENTIONS

North Arrow W/No. Coor.
Edge Of Road
Concrete Pavement
Dirt Road
B.C.L.C.
Granite Curb
Guide Rail
Concrete Median Barrier
Bit. Walk
Conc. Sidewalk
Railroad Tracks
Grid Arrow
Limit Of Marsh
Stone Wall
Ledge Outcrop
Inland Wetland Limits
STATE LINE
Power Line
Swamp
Building
Transmission Tower
Chain Link Fence
Rustic Fence
Pipe Fence
Board Fence
Water Edge
Stream
Ditch
TOWN LINE
Riprap
Hedge Row
Tree Line
Shrub
Evergreen Tree
Deciduous Tree
Retaining Wall
Highway Line
Street Line
Property Line
Lot Line
Easement Line

THE DESIGN APPEARS TO CONFORM TO APPLICABLE CRITERIA. APPROVAL IS NOT TO BE CONSTRUED TO MEAN THAT ALL ASPECTS OF THE DESIGN HAVE BEEN PERSONALLY CHECKED BY THE UNDERSIGNED.

DESIGNED BY:

MICHAEL BAKER ENGINEERING, INC.
500 ENTERPRISE DRIVE
SUITE 2B
ROCKY HILL, CT 06067

Plans For
CLINTON RAILROAD STATION - NORTH PLATFORM IMPROVEMENTS AND PEDESTRIAN BRIDGE

Town(s)/City
CLINTON

STATE PROJECT NO.
310-0059

DRAWING NO.
G-001

SHEET NO.
01.01

Connecticut Department of Transportation
QA/QC Format Check

REV. No.	SHEET No.	DATE mm/dd/yy	NEW	REV.	DEL.	DESCRIPTION	BY	REV. No.	SHEET No.	DATE mm/dd/yy	NEW	REV.	DEL.	DESCRIPTION	BY	REV. No.	SHEET No.	DATE mm/dd/yy	NEW	REV.	DEL.	DESCRIPTION	BY

REV.	DATE	REVISION DESCRIPTION	SHEET NO.

THE INFORMATION, INCLUDING ESTIMATED QUANTITIES OF WORK, SHOWN ON THESE SHEETS IS BASED ON LIMITED INVESTIGATIONS BY THE STATE AND IS IN NO WAY WARRANTED TO INDICATE THE CONDITIONS OF ACTUAL QUANTITIES OF WORK WHICH WILL BE REQUIRED.

Plotted Date: 10/7/2011

DESIGNER/DRAFTER: A. DeVaux

CHECKED BY: D. Tudryn

SCALE AS NOTED

STATE OF CONNECTICUT
DEPARTMENT OF TRANSPORTATION

Filename: ...\New_Revision_Sheet.dgn

SIGNATURE BLOCK:

PROJECT TITLE:
SHORE LINE EAST RAILROAD STATIONS

TOWN: **CLINTON**

DRAWING TITLE: **LIST OF REVISIONS**

PROJECT NO. **310-0059**

DRAWING NO. **REV-1**

SHEET NO. **02.01**

03 - CIVIL

INDEX OF DRAWINGS

DRAWING NUMBER	DRAWING TITLE
CVI-001	DRAWING INDEX
D-100	DEMOLITION PLAN
B-100	BORING PLAN
B-101	BORING LOGS - 1
B-102	BORING LOGS - 2
C-001	STAGING PLAN
C-100	BASELINE TIES
C-101	SURVEY PLAN
C-102	SITE PLAN
C-103	STRIPING PLAN
C-104	GRADING PLAN
C-105	CURB LAYOUT PLAN
C-106	SEDIMENTATION AND EROSION CONTROL PLAN
C-300	PROFILE VIEW
C-301	CROSS SECTIONS I
C-302	CROSS SECTIONS II
C-500	MISCELLANEOUS DETAILS - I
C-501	MISCELLANEOUS DETAILS - II
C-502	SIDEWALK RAMPS SHEET 1
C-503	SIDEWALK RAMPS SHEET 2
C-504	SIDEWALK RAMP SHEET 3
C-505	SIDEWALK RAMP SHEET 4
C-700	LANDSCAPE PLAN
M-100	WATER SERVICE PLAN

DESIGNED BY:

Baker

MICHAEL BAKER ENGINEERING, INC.
500 ENTERPRISE DRIVE
SUITE 2B
ROCKY HILL, CT 06067

REV.	DATE	REVISION DESCRIPTION	SHEET NO.
-	-	-	-
-	-	-	-
-	-	-	-
-	-	-	-
-	-	-	-
-	-	-	-

THE INFORMATION, INCLUDING ESTIMATED QUANTITIES OF WORK, SHOWN ON THESE SHEETS IS BASED ON LIMITED INVESTIGATIONS BY THE STATE AND IS IN NO WAY WARRANTED TO INDICATE THE CONDITIONS OF ACTUAL QUANTITIES OF WORK WHICH WILL BE REQUIRED.

Plotted Date: $DATE$

DESIGNER/DRAFTER: **PB**

CHECKED BY: **T.SARDILLI**

STATE OF CONNECTICUT
DEPARTMENT OF TRANSPORTATION

Filename: $FILEA$

SIGNATURE/ BLOCK:

Baker
Michael Baker Engineering Inc.
500 Enterprise Drive
Suite 2B
Rocky Hill, CT 06067

STATE OF CONNECTICUT — JEFFREY M. DELESPINASSE — NO. 19078 — LICENSED PROFESSIONAL ENGINEER

PROJECT TITLE:

SHORELINE EAST RAILROAD STATIONS

TOWN: **CLINTON**

DRAWING TITLE: **RAILROAD STATIONS**

PROJECT NO. **310-0059**

DRAWING NO. **CVI-001**

SHEET NO. **03.01**

Border Version: 11/14/08

Connecticut Department of Transportation
QA/QC Format Check

DEMOLITION GENERAL NOTES:

1. DASHED LINES DENOTE MATERIALS AND/OR ASSEMBLIES TO BE REMOVED, BUT DEMOLITION ITEMS MAY NOT BE ALL INCLUSIVE. THE CONTRACTOR SHALL REVIEW THE REQUIREMENTS OF NEW CONSTRUCTION AND IS TO COMPLETE ALL DEMOLITION, RESTORATION CUTTING/PATCHING NECESSARY TO ACHIEVE INTENDED NEW CONDITION AND QUALITY. WHERE DEMOLITION IS INDICATED, COMPLETELY REMOVE ALL CONSTRUCTION TO PROVIDE CLEAN, UNIFORM SURFACES AS REQUIRED FOR NEW CONSTRUCTION. REMOVE ALL MISCELLANEOUS ACCESSORIES RELATED TO SYSTEMS REMOVAL.

2. DIMENSIONS AND INFORMATION GIVEN ON THE DRAWINGS OR SPECIFIED ELSEWHERE IN THE CONTRACT DOCUMENTS CONCERNING SIZES, CLEARANCES, ELEVATIONS, OBSTRUCTIONS IN EXISTING CONSTRUCTION, LOCATION OF UTILITIES, OR OTHER CONDITIONS HAVE BEEN OBTAINED BY THE DESIGNER OR BY SOURCES WHICH THE DESIGNER BELIEVES TO BE RELIABLE, HOWEVER THEIR ACCURACY IS NOT IN ANY WAY GUARANTEED. SUCH INFORMATION IS PROVIDED SOLELY FOR THE CONVENIENCE OF THE CONTRACTOR, AND USE OF THIS INFORMATION IS AT THE CONTRACTOR'S RISK. THE CONTRACTOR SHALL CHECK ALL DIMENSIONS AND VERIFY ALL CONDITIONS SHOWN OF THESE PLANS.

3. ALL DEMOLITION MATERIALS SHALL BE DISPOSED OF OFF SITE AND IN A LEGAL MANNER.

4. COORDINATE TIMING OF ALL DEMOLITION WORK WITH NEW CONSTRUCTION AND TO LIMIT THE DISTURBANCE TO PASSENGER AND RAILROAD OPERATIONS.

5. PROVIDE DUST BARRIERS, BARRICADES AND OTHER PROTECTIONS REQUIRED BY CONDITIONS AND BY AMTRAK

6. LOCATE ALL DUMPSTERS AND OTHER DEBRIS AT THE DIRECTION OF THE ENGINEER. DO NOT CLOSE STREETS, SIDEWALKS OR PATHS WITHOUT PERMISSION FROM THE ENGINEER. PROVIDE ALTERNATE ROUTES AROUND CLOSED OR OBSTRUCTED TRAFFIC WAYS IF REQUESTED.

7. FENCES AND TRAFFIC BARRIERS SHALL BE MAINTAINED AROUND TRACKS TO THE GREATEST EXTENT POSSIBLE TO PREVENT UNAUTHORIZED ENTRY ONTO TRACKS. CONTRACTOR SHALL STAGE THE REMOVAL OF FENCES AND JERSEY BARRIERS, OR PROVIDE TEMPORARY FENCING AND BARRIERS UNTIL PERMANENT MEASURES ARE INSTALLED.

8. AREAS OF SITE CONTAIN SOIL CONTAMINANTS. REFER TO DRAWING ENV - 1 AND SPECIFICATIONS.

9. THE EXISTING RESIDENTIAL STRUCTURES DEPICTED ON THE CTDOT SURVEY WITHIN THE PROPERTY LABELLED "DONALD SMITH" HAVE BEEN REMOVED IN THIER ENTIRITY.

10. REFER TO CIVIL AND ELECTRICAL PLANS FOR ADDITIONAL DEMOLITION.

DEMOLITION PLAN NOTES:

1. ITEM #0201001 "CLEARING AND GRUBBING"

2. THE CONTRACTOR SHALL REMOVE ALL ARCHITECTURAL AND ELECTRICAL COMPONENTS OF THE EXISTING PASSENGER SHELTER BETWEEN THE FLOOR SLAB AND THE ROOF SOFFIT, INCLUDING BUT NOT LIMITED TO WINDOWS, WALL FRAMING AND SIDING, ALUMINUM WINDOW SILLS, ELECTRICAL CONDUIT, PERIMETER RAILINGS, AND BENCHES. ADDITIONALLY, THE CONTRACTOR SHALL REMOVE THE PLATFORM CANOPY ROOF EXTENSION ATTACHMENT SHOWN ON DETAIL C, DRAWING A-102, AND THE ADJACENT FIBER-CEMENT SIDING ON THE SHELTER. THE EXISTING SHELTER STEEL COLUMNS SHALL BE CUT AT SLAB GRADE AND THE ENTIRE REMAINING STRUCTURE SHALL BE HOISTED TO THE LOCATION INDICATED ON THE SITE PLAN WITH THE ROOF ASSEMBLY INTACT. REFER TO THE ARCHITECTURAL AND STRUCTURAL DRAWINGS FOR ADDITIONAL DETAILS. AFTER THE SHELTER IS REMOVED, THE CONTRACTOR SHALL DEMOLISH THE STRUCTURAL STEEL EMBEDDED BASEPLATES AND PREP THE CONCRETE FOUNDATION WALL/BEARING SURFACES IN PREPARATION FOR THE NEW ELEVATOR/STAIR TOWER ASSEMBLY.

3. REMOVE 225 LF EXISTING CHAIN LINK FENCE

4. REMOVE WOOD STEPS, SLATE PAD AND METAL HANDRAIL

5. REMOVE 3 CONCRETE POSTS

6. REMOVE WOOD POST WITH ABANDONED WATER SPIGOT AND ASSOCAITE PIPING TO STREET MAIN. (COORDINATE NEW TAP FOR STATION HOSE BIB WITH CT WATER)

7. REMOVE STEEL POSTS AND RAILING

8. REMOVE WOOD POSTS

9. THE CONTRACTOR SHALL REMOVE THE EXISTING GUARDRAIL SYSTEM FROM THE NEAREST PLATFORM GUARDRAIL POST TO THE END OF THE GUARDRAIL EXTENSIONS AT THE PASSENGER SHELTER. WHEN FINISH WORK ON THE ELEVATOR/STAIR ASSEMBLY IS COMPLETE, FIELD MEASURE THE WORK AREA AND REPLACE THE GUARDRAIL EXTENSIONS AS INDICATED IN DRAWING A-401.

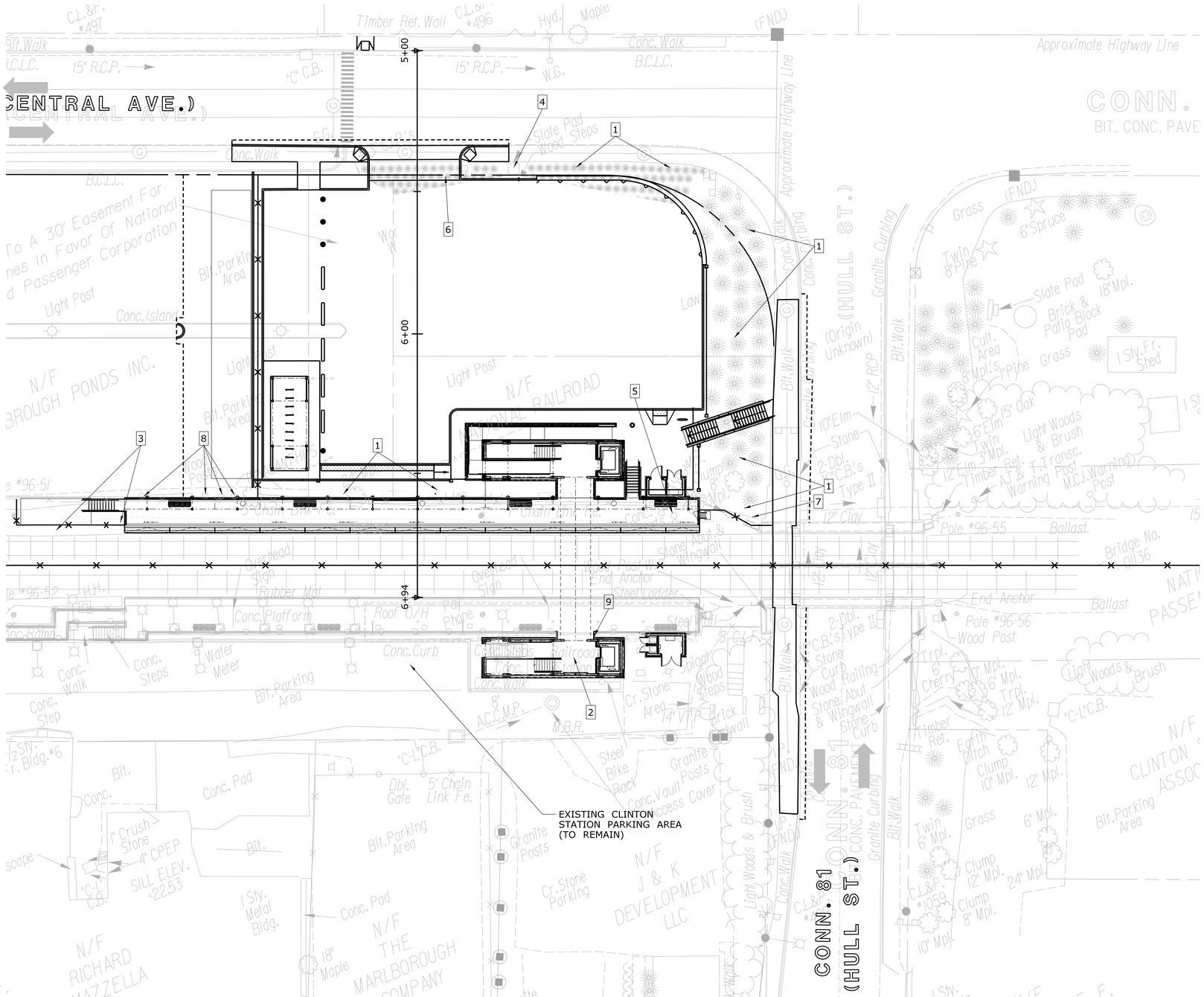

DEMOLITION PLAN
SCALE: 1" = 20'-0"

REV.	DATE	REVISION DESCRIPTION	SHEET NO.
-	-	-	-

Filename: *.dgn

THE INFORMATION, INCLUDING ESTIMATED QUANTITIES OF WORK, SHOWN ON THESE SHEETS IS BASED ON LIMITED INVESTIGATIONS BY THE STATE AND IS IN NO WAY WARRANTED TO INDICATE THE CONDITIONS OF ACTUAL QUANTITIES OF WORK WHICH WILL BE REQUIRED.

Date Plotted: October 01, 2014

DESIGNER/DRAFTER: PB
CHECKED BY: ALM
SCALE IN FEET 0 20 40
SCALE 1"=20'

STATE OF CONNECTICUT
DEPARTMENT OF TRANSPORTATION

ENGINEER: BAKER ENGINEERING
APPROVED BY:
DATE:

PROJECT TITLE: SHORE LINE EAST RAILROAD STATIONS

TOWN: CLINTON

DRAWING TITLE: DEMOLITION PLAN

PROJECT NO. 310-0059
DRAWING NO. D-100
SHEET NO. 03.02

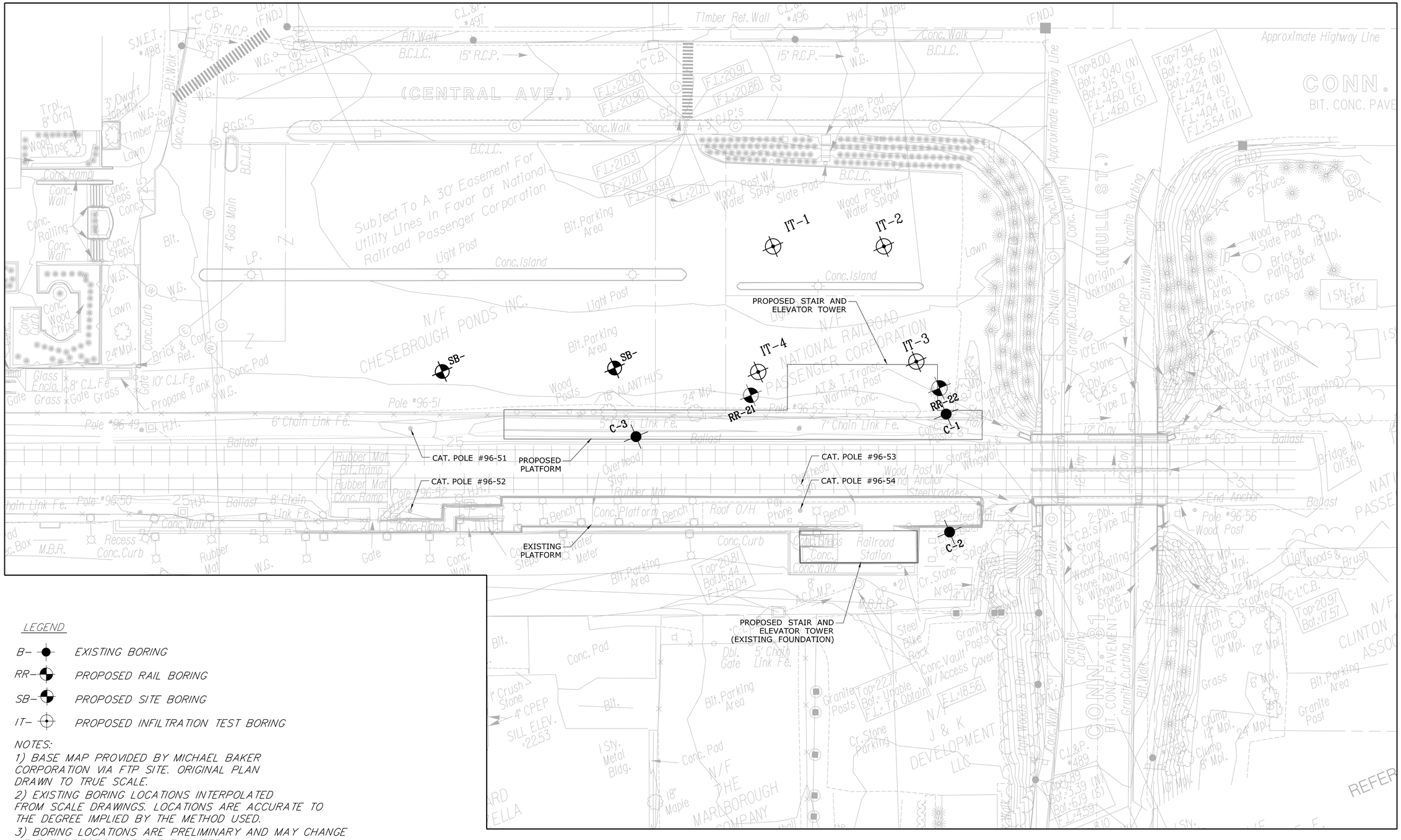

LEGEND

B– EXISTING BORING

RR– PROPOSED RAIL BORING

SB– PROPOSED SITE BORING

IT– PROPOSED INFILTRATION TEST BORING

NOTES:

1) BASE MAP PROVIDED BY MICHAEL BAKER CORPORATION VIA FTP SITE. ORIGINAL PLAN DRAWN TO TRUE SCALE.

2) EXISTING BORING LOCATIONS INTERPOLATED FROM SCALE DRAWINGS. LOCATIONS ARE ACCURATE TO THE DEGREE IMPLIED BY THE METHOD USED.

3) BORING LOCATIONS ARE PRELIMINARY AND MAY CHANGE AT THE DIRECTION OF THE ENGINEER.

N

BORING PLAN

SCALE: 1" = 20'-0"

REV.	DATE	REVISION DESCRIPTION	SHEET NO.
-	-	-	-

Filename: FD_MSH_BOR_0027_0059_B-100.dgn

THE INFORMATION, INCLUDING ESTIMATED QUANTITIES OF WORK, SHOWN ON THESE SHEETS IS BASED ON LIMITED INVESTIGATIONS BY THE STATE AND IS IN NO WAY WARRANTED TO INDICATE THE CONDITIONS OF ACTUAL QUANTITIES OF WORK WHICH WILL BE REQUIRED.

Date Plotted: October 01, 2014

DESIGNER/DRAFTER: MB

CHECKED BY: MB

SCALE IN FEET 0 20 40

SCALE 1"=20'

STATE OF CONNECTICUT
DEPARTMENT OF TRANSPORTATION

ENGINEER: BAKER ENGINEERING

APPROVED BY:

DATE:

STATE OF CONNECTICUT DELOS C. SMITH JR. No. 18079 LICENSED PROFESSIONAL ENGINEER

PROJECT TITLE:

SHORE LINE EAST RAILROAD STATIONS

TOWN: **CLINTON**

DRAWING TITLE: **BORING PLAN**

PROJECT NO. **310-0059**

DRAWING NO. **B-100**

SHEET NO. **03.03**

Connecticut DOT Boring Report

Inspector: R. Janeiro | Town: Clinton | Hole No.: IT-01 | Stat./Offset:
Engineer: GeoDesign, Inc. | Project No.: 310-0048 | Northing: 4854.34
Start Date: 9-20-10 | Route No.: | Easting: 10847.33
Finish Date: 9-20-10 | Bridge No.: | Surface Elevation: 21.9
Project Description: Shore Line East - 0183-007.00
Casing Size/Type: FJ3 | Sampler Type/Size: SS / 1-3/8" (ID) | Core Barrel Type:
Hammer Wt.: 300 lb. Fall: 24in. | Hammer Wt.: 140 lb. Fall: 30 in.
Groundwater Observations: ⊘None observed after 0 hours

Depth (ft)	Sample Type/No.	Blows on Sampler per 6 inches	Pen. (in.)	Rec. (in.)	RQD %	Generalized Strata Description	Material Description and Notes	Elevation (ft)
0						Asphalt		
						Fill		
	S-1	8 15 15	18	14			Medium dense, Top 4": light brown fine to coarse SAND, little Silt, trace fine Gravel	
						Sand Outwash	Next 4": black fine to coarse SAND, some Silt, trace fine Gravel	
	S-2	4 4 4 3 2	24	20		Silty Sand	Next 2": brown fine to coarse SAND, trace Silt	
							Bottom 4": brown fine to coarse SAND, some fine to coarse Gravel, some (-) Silt, (moist)	20
5	S-3	3 5 8 12	24	9		Sand Outwash	Loose, dark brown to brown fine to coarse SAND and SILT, (moist)	
							Medium dense, light brown fine to medium SAND, trace fine Gravel, trace Silt, (moist)	15
							END OF BORING 6ft	
10								10
15								5
20								

Sample Type: S = Split Spoon C = Core UP = Undisturbed Piston V = Vane Shear Test
Proportions Used: Trace = 1 - 10%, Little = 10 - 20%, Some = 20 - 35%, And = 35 - 50%

Total Penetration in | NOTES: | Sheet 1 of 1
Earth: 6ft Rock: 0ft
No. of Soil Samples: 2 No. of Core Runs: 0
SM-001-M REV. 1/02

Connecticut DOT Boring Report

Inspector: R. Janeiro | Town: Clinton | Hole No.: IT-02 | Stat./Offset:
Engineer: GeoDesign, Inc. | Project No.: 310-0048 | Northing: 4836.14
Start Date: 9-20-10 | Route No.: | Easting: 10890.89
Finish Date: 9-20-10 | Bridge No.: | Surface Elevation: 21.9
Project Description: Shore Line East - 0183-007.00
Casing Size/Type: FJ3 | Sampler Type/Size: SS / 1-3/8" (ID) | Core Barrel Type:
Hammer Wt.: 300 lb. Fall: 24in. | Hammer Wt.: 140 lb. Fall: 30 in.
Groundwater Observations: ⊘None observed after 0 hours

Depth (ft)	Sample Type/No.	Blows on Sampler per 6 inches	Pen. (in.)	Rec. (in.)	RQD %	Generalized Strata Description	Material Description and Notes	Elevation (ft)
0						Asphalt		
						Fill		
	S-1	4 6 3	18	13		Sand Outwash	Loose, Top 4": brown fine to coarse SAND, some Silt, trace fine Gravel	
	S-2	4 3 6 8	24	18		Silty Sands	Middle 3": light brown fine to coarse SAND, trace Silt	20
						Silty Gravelly Sands	Bottom 4": dark brown fine to coarse SAND and SILT	
5	S-3	11 13 14 13	24	20		Sand Outwash	Loose, Top 10": brown fine to coarse SAND, some fine to coarse Gravel, little Silt	
							Bottom 8": light brown fine to coarse SAND, little fine Gravel, trace Silt	15
							Medium dense, light brown fine to coarse SAND, trace fine Gravel, trace Silt	
							END OF BORING 6ft	
10								10
15								5
20								

Sample Type: S = Split Spoon C = Core UP = Undisturbed Piston V = Vane Shear Test
Proportions Used: Trace = 1 - 10%, Little = 10 - 20%, Some = 20 - 35%, And = 35 - 50%

Total Penetration in | NOTES: | Sheet 1 of 1
Earth: 6ft Rock: 0ft
No. of Soil Samples: 3 No. of Core Runs: 0
SM-001-M REV. 1/02

Connecticut DOT Boring Report

Inspector: R. Janeiro | Town: Clinton | Hole No.: IT-03 | Stat./Offset:
Engineer: GeoDesign, Inc. | Project No.: 310-0048 | Northing: 4785.49
Start Date: 9-20-10 | Route No.: | Easting: 10884.86
Finish Date: 9-20-10 | Bridge No.: | Surface Elevation: 23.9
Project Description: Shore Line East - 0183-007.00
Casing Size/Type: FJ3 | Sampler Type/Size: SS / 1-3/8" (ID) | Core Barrel Type:
Hammer Wt.: 300 lb. Fall: 24in. | Hammer Wt.: 140 lb. Fall: 30 in.
Groundwater Observations: ⊘None observed after 0 hours

Depth (ft)	Sample Type/No.	Blows on Sampler per 6 inches	Pen. (in.)	Rec. (in.)	RQD %	Generalized Strata Description	Material Description and Notes	Elevation (ft)
0						Asphalt		
						Fill		
	S-1	4 7 13	18	12			Medium dense, Top 2": black-brown fine to coarse SAND, some Silt, trace fine Gravel	
							Bottom 10": brown fine to coarse SAND, some Silt, little fine to coarse Gravel, with a piece of coarse Gravel jammed in sample tip	
	S-2	12 6 5 4	24	21		Outwash Sand	Medium dense, Top 7": light brown fine to coarse SAND, little (-) Silt	
						Organic Silty Sand	Bottom 14": dark brown to brown fine to coarse SAND and ORGANIC SILT, trace Roots	20
5	S-3	5 4 6 7	24	14			Loose to medium dense, Top 7": brown fine to coarse SAND and ORGANIC SILT, trace Roots	
						Gravelly Sand	Bottom 7": light brown fine to coarse SAND, some fine Gravel, trace Silt	15
							END OF BORING 6ft	
10								10
15								5
20								

Sample Type: S = Split Spoon C = Core UP = Undisturbed Piston V = Vane Shear Test
Proportions Used: Trace = 1 - 10%, Little = 10 - 20%, Some = 20 - 35%, And = 35 - 50%

Total Penetration in | NOTES: | Sheet 1 of 1
Earth: 6ft Rock: 0ft
No. of Soil Samples: 3 No. of Core Runs: 0
SM-001-M REV. 1/02

Connecticut DOT Boring Report

Inspector: R. Janeiro | Town: Clinton | Hole No.: RR-21 | Stat./Offset:
Engineer: GeoDesign, Inc. | Project No.: 310-0048 | Northing: 4799.4
Start Date: 9-20-10 | Route No.: | Easting: 10814.2
Finish Date: 9-21-10 | Bridge No.: | Surface Elevation: 24.4
Project Description: Shore Line East - 0183-007.00
Casing Size/Type: FJ4 | Sampler Type/Size: SS / 1-3/8" (ID) | Core Barrel Type: NW(dt)
Hammer Wt.: 300 lb. Fall: 24in. | Hammer Wt.: 140 lb. Fall: 30 in.
Groundwater Observations: ⊘None observed after 0 hours

Depth (ft)	Sample Type/No.	Blows on Sampler per 6 inches	Pen. (in.)	Rec. (in.)	RQD %	Generalized Strata Description	Material Description and Notes	Elevation (ft)
0						Asphalt		
						Fill		
	S-1	7 11 9	18	18			Medium dense, Top 3": brown fine to coarse SAND, little fine Gravel, little Silt	
	S-2	6 11 16 16	24	18			Middle 7": black fine to coarse SAND, some coarse Gravel, little Silt, trace Cinders	
5						Organic Silty Sand	Bottom 8": light brown fine to coarse SAND, trace Silt	20
	S-3	3 3 4 3	24	13			Medium dense, Top 10": light brown fine to coarse SAND, little fine Gravel, trace Silt	
	S-4	4 3 2 8	24	15			Bottom 8": brown fine to coarse SAND, some Silt, little fine Gravel, (.5" of black staining at sample top)	
10							Loose, dark brown to brown fine to medium SAND, little Organic Silt, trace fine Gravel, trace Roots	15
						Sand Outwash	Loose, brown fine to medium SAND, little Organic Silt, trace Roots	
	S-5	11 20 34 44	24	12			Very dense, light brown fine to coarse SAND, little (-) fine Gravel, trace Silt	10
15								
	S-6	18 24 28 28	24	9			Very dense, light brown fine to medium SAND, trace Silt	5
20								
	S-7	21 16 15 14	24	20			Dense, light brown fine to coarse SAND, trace fine Gravel, trace Silt	0
25								

Sample Type: S = Split Spoon C = Core UP = Undisturbed Piston V = Vane Shear Test
Proportions Used: Trace = 1 - 10%, Little = 10 - 20%, Some = 20 - 35%, And = 35 - 50%

Total Penetration in | NOTES: Augers advanced to 10 ft. below grade; then 4" FJ casing to 13 ft. below grade; then open hole (with mud) to end of boring. Auger chatter from 60 to 64.5 ft. below grade. | Sheet 1 of 1
Earth: 64.5ft Rock: 20ft
No. of Soil Samples: 14 No. of Core Runs: 4
SM-001-M REV. 1/02

Connecticut DOT Boring Report

Inspector: R. Janeiro | Town: Clinton | Hole No.: RR-21 | Stat./Offset:
Engineer: GeoDesign, Inc. | Project No.: 310-0048 | Northing: 4799.4
Start Date: 9-20-10 | Route No.: | Easting: 10814.2
Finish Date: 9-21-10 | Bridge No.: | Surface Elevation: 24.4
Project Description: Shore Line East - 0183-007.00
Casing Size/Type: FJ4 | Sampler Type/Size: SS / 1-3/8" (ID) | Core Barrel Type: NW(dt)
Hammer Wt.: 300 lb. Fall: 24in. | Hammer Wt.: 140 lb. Fall: 30 in.
Groundwater Observations: ⊘None observed after 0 hours

Depth (ft)	Sample Type/No.	Blows on Sampler per 6 inches	Pen. (in.)	Rec. (in.)	RQD %	Generalized Strata Description	Material Description and Notes	Elevation (ft)
25						Silty Sand		
	S-8	9 8 12 12	24	12		Sand Outwash	Medium dense, Top 6": brown fine SAND and SILT	
							Bottom 8": olive fine to medium SAND, trace Silt	-5
30	S-9	15 15 10 7	24	10			Medium dense, olive fine to coarse SAND, trace fine Gravel, trace Silt	
	S-10	5 3 7 3	24	24			Loose to medium dense, olive Top 4": fine to medium SAND, trace Silt	
							Bottom 20": fine to coarse SAND, trace fine Gravel, trace Silt	-10
35	S-11	8 5 5 7	24	12			Loose to medium dense, olive fine to coarse SAND, trace fine Gravel, trace Silt	
								-15
40	S-12	7 5 4 6	24	17			Loose, olive fine to medium SAND, trace (+) Silt, trace fine Gravel	
								-20
45	S-13	6 5 2 3	24	17			Loose, olive fine to medium SAND, trace Silt, trace fine Gravel	
								-25
50								

Sample Type: S = Split Spoon C = Core UP = Undisturbed Piston V = Vane Shear Test
Proportions Used: Trace = 1 - 10%, Little = 10 - 20%, Some = 20 - 35%, And = 35 - 50%

Total Penetration in | NOTES: Augers advanced to 10 ft. below grade; then 4" FJ casing to 13 ft. below grade; then open hole (with mud) to end of boring. Auger chatter from 60 to 64.5 ft. below grade. | Sheet 2 of 4
Earth: 64.5ft Rock: 20ft
No. of Soil Samples: 14 No. of Core Runs: 4
SM-001-M REV. 1/02

Connecticut DOT Boring Report

Inspector: R. Janeiro | Town: Clinton | Hole No.: RR-21 | Stat./Offset:
Engineer: GeoDesign, Inc. | Project No.: 310-0048 | Northing: 4799.4
Start Date: 9-20-10 | Route No.: | Easting: 10814.2
Finish Date: 9-21-10 | Bridge No.: | Surface Elevation: 24.4
Project Description: Shore Line East - 0183-007.00
Casing Size/Type: FJ4 | Sampler Type/Size: SS / 1-3/8" (ID) | Core Barrel Type: NW(dt)
Hammer Wt.: 300 lb. Fall: 24in. | Hammer Wt.: 140 lb. Fall: 30 in.
Groundwater Observations: ⊘None observed after 0 hours

Depth (ft)	Sample Type/No.	Blows on Sampler per 6 inches	Pen. (in.)	Rec. (in.)	RQD %	Generalized Strata Description	Material Description and Notes	Elevation (ft)
50	S-14	14 8 11 11	24	18		Silty Sand	Medium dense, Top 5": olive fine to medium SAND, trace Silt	
							Bottom 13": brown, fine SAND and SILT	-30
55	S-15	6 9 13 20	24	18			Medium dense, brown fine SAND and SILT	
								-35
60	S-16	34 38 61 68	24	14			Very dense, brown fine to coarse SAND, little fine Gravel, little Silt, with decomposed Rock pieces at sample tip	
								-40
65						Decomposed Rock		
	C-1		60	28	0		Very Poor Quality, Soft to Moderately Hard, Extremely Weathered, gray-white, GRANITIC GNEISS, very close jointing, [Core Times (min./ft.): 1.5,2,1.5,2.5,3]	-45
70								
	C-2		60	35	0		Very Poor Quality, Soft to Moderately Hard, Highly to Extremely Weathered, gray-white, GRANITIC GNEISS, very close jointing, [Core Times (min./ft.): 3.5,3,2,3.3]	-50
75						Bedrock		

Sample Type: S = Split Spoon C = Core UP = Undisturbed Piston V = Vane Shear Test
Proportions Used: Trace = 1 - 10%, Little = 10 - 20%, Some = 20 - 35%, And = 35 - 50%

Total Penetration in | NOTES: Augers advanced to 10 ft. below grade; then 4" FJ casing to 13 ft. below grade; then open hole (with mud) to end of boring. Auger chatter from 60 to 64.5 ft. below grade. | Sheet 3 of 4
Earth: 64.5ft Rock: 20ft
No. of Soil Samples: 14 No. of Core Runs: 4
SM-001-M REV. 1/02

Connecticut DOT Boring Report

Inspector: R. Janeiro | Town: Clinton | Hole No.: RR-21 | Stat./Offset:
Engineer: GeoDesign, Inc. | Project No.: 310-0048 | Northing: 4799.4
Start Date: 9-20-10 | Route No.: | Easting: 10814.2
Finish Date: 9-21-10 | Bridge No.: | Surface Elevation: 24.4
Project Description: Shore Line East - 0183-007.00
Casing Size/Type: FJ4 | Sampler Type/Size: SS / 1-3/8" (ID) | Core Barrel Type: NW(dt)
Hammer Wt.: 300 lb. Fall: 24in. | Hammer Wt.: 140 lb. Fall: 30 in.
Groundwater Observations: ⊘None observed after 0 hours

Depth (ft)	Sample Type/No.	Blows on Sampler per 6 inches	Pen. (in.)	Rec. (in.)	RQD %	Generalized Strata Description	Material Description and Notes	Elevation (ft)
75						Bedrock (con't)		
	C-3		60	58	65		Fair Quality, Moderately Hard, Slight to Moderately Weathered, gray-white, GRANITIC GNEISS, close jointing, [Core Times (min./ft.): 2,1.3,2,1.3,2]	-55
80								
	C-4		60	47	12		Very Poor Quality, Moderately Hard to Hard, Moderately Weathered, gray-white, GRANITIC GNEISS, close jointing, [Core Times (min./ft.): 4,4.5,4,4,6]	-60
85								
							END OF BORING 84.5ft	-65
90								
								-70
95								
								-75
100								

Sample Type: S = Split Spoon C = Core UP = Undisturbed Piston V = Vane Shear Test
Proportions Used: Trace = 1 - 10%, Little = 10 - 20%, Some = 20 - 35%, And = 35 - 50%

Total Penetration in | NOTES: Augers advanced to 10 ft. below grade; then 4" FJ casing to 13 ft. below grade; then open hole (with mud) to end of boring. Auger chatter from 60 to 64.5 ft. below grade. | Sheet 4 of 4
Earth: 64.5ft Rock: 20ft
No. of Soil Samples: 14 No. of Core Runs: 4
SM-001-M REV. 1/02

Connecticut DOT Boring Report

Inspector: R. Janeiro | Town: Clinton | Hole No.: RR-22 | Stat./Offset:
Engineer: GeoDesign, Inc. | Project No.: 310-0048 | Northing: 4771.3
Start Date: 9-21-10 | Route No.: | Easting: 10889.6
Finish Date: 9-22-10 | Bridge No.: | Surface Elevation: 23.9
Project Description: Shore Line East - 0183-007.00
Casing Size/Type: FJ4 | Sampler Type/Size: SS / 1-3/8" (ID) | Core Barrel Type:
Hammer Wt.: 300 lb. Fall: 24in. | Hammer Wt.: 140 lb. Fall: 30 in.
Groundwater Observations: ⊘None observed after 0 hours, ⊘17.2 ft. after 6 hours, ⊘16.9 ft. after 24 hours

Depth (ft)	Sample Type/No.	Blows on Sampler per 6 inches	Pen. (in.)	Rec. (in.)	RQD %	Generalized Strata Description	Material Description and Notes	Well Construction	Elevation (ft)
0						Asphalt			
						Fill			
	S-1	6 7 5	18	10		Sand	Medium dense, Top 8": black fine to coarse SAND and SILT, trace fine Gravel		
						Organic Silty Sand	Bottom 4": light brown fine to coarse SAND, little Silt, trace fine Gravel		
	S-2	7 7 8 4	24	16			Medium dense, Top 2": light brown fine to coarse SAND, trace fine Gravel, trace Silt		20
5						Sand Outwash	Middle 10": dark brown fine to coarse SAND and ORGANIC SILT, trace Shells, (moist)		
	S-3	6 11 11 13	24	14			Bottom 4": brown fine to coarse SAND and SILT, trace fine Gravel		
	S-4	17 10 10 9	24	15			Medium dense, light brown fine to coarse SAND, trace fine Gravel, trace (-) Silt		
							Medium dense, light brown fine to medium SAND, trace fine Gravel, trace (-) Silt		15
10	S-5	5 8 9 9	24	17			Medium dense, light brown fine to medium SAND, trace Silt		
									10
15	S-6	13 14 13 15	24	9			Medium dense, olive fine to coarse SAND, trace fine Gravel, trace Silt		
	S-7	13 11 8 9	24	12			Medium dense, olive fine to coarse SAND, little fine to coarse Gravel, trace Silt, (piece of coarse Gravel jammed mid-sample)		5
20									
	S-8	14 13 13 17	24	12			Medium dense, Top 9": olive fine to medium SAND, trace fine Gravel, trace Silt		
						Silt	Bottom 3": brown SILT, with occasional fine SAND and SILT partings up to 1/8" thick		
						Sand Outwash			0
25									

Sample Type: S = Split Spoon C = Core UP = Undisturbed Piston V = Vane Shear Test
Proportions Used: Trace = 1 - 10%, Little = 10 - 20%, Some = 20 - 35%, And = 35 - 50%

Total Penetration in | NOTES: Augers advanced to 10 ft. below grade; then 4" FJ casing to 25 ft. below grade; then open hole to end of boring. | Sheet 1 of 3
Earth: 68.5ft Rock: ft
No. of Soil Samples: 17 No. of Core Runs: ---
SM-001-M REV. 1/02

REV.	DATE	REVISION DESCRIPTION	SHEET NO.

Filename: FD_MSH_BRL_0027_0059_B-101.dgn

THE INFORMATION, INCLUDING ESTIMATED QUANTITIES OF WORK, SHOWN ON THESE SHEETS IS BASED ON LIMITED INVESTIGATIONS BY THE STATE AND IS IN NO WAY WARRANTED TO INDICATE THE CONDITIONS OF ACTUAL QUANTITIES OF WORK WHICH WILL BE REQUIRED.

Date Plotted: October 01, 2014

DESIGNER/DRAFTER: M. BARTELS / R. WRIGHT
CHECKED BY: M. BARTELS
SCALE AS NOTED

STATE OF CONNECTICUT
DEPARTMENT OF TRANSPORTATION

ENGINEER: BAKER ENGINEERING
APPROVED BY: DATE:

PROJECT TITLE: SHORE LINE EAST RAILROAD STATIONS

TOWN: CLINTON

DRAWING TITLE: BORING LOGS - 1

PROJECT NO. 310-0059
DRAWING NO. B-101
SHEET NO. 03.04

Connecticut DOT Boring Report

Inspector: R. Janeiro	Town: Clinton	Hole No.: RR-22	
Engineer: GeoDesign, Inc.	Project No.: 310-0048	Stat./Offset:	
Start Date: 9-21-10	Route No.:	Northing: 4771.3	
Finish Date: 9-22-10	Bridge No.:	Easting: 10889.6	
Project Description: Shore Line East - 0183-007.00		Surface Elevation: 23.9	
Casing Size/Type: FJ4	Sampler Type/Size: SS / 1-3/8" (ID)	Core Barrel Type:	
Hammer Wt.: 300 lb. Fall: 24in.	Hammer Wt.: 140 lb. Fall: 30 in.		

Groundwater Observations: ⊘None observed after 0 hours, ⊘17.2 ft. after 6 hours, ⊘16.9 ft. after 24 hours

Depth (ft)	Sample Type/No.	Blows on Sampler per 6 inches	Pen. (in.)	Rec. (in.)	RQD %	Generalized Strata Description	Material Description and Notes	Well Construction	Elevation (ft)
25						Sand Outwash (con't)			
	S-9	10 9 9 11	24	0			No Recovery		
	S-10	7 5 5 5	24	23			Loose to medium dense, olive fine to coarse SAND, trace fine Gravel, trace Silt		-5
30	S-11	4 3 3 5	24	19			Loose, olive fine to medium SAND, trace Silt		-10
35	S-12	13 7 8 9	24	22			Medium dense, olive fine to medium SAND, trace fine Gravel, trace Silt		-15
40	S-13	4 4 3 7	24	19			Loose, light brown fine to medium SAND, trace fine Gravel, trace Silt, (3" seam of orange fine to coarse SAND, trace Silt)		-20
45	S-14	10 15 15 16	24	18			Medium dense, light brown fine to medium SAND, trace Silt, with occasional dark gray partings layered up to 1/4" thick		-25
						Silty Sand			
50									

Sample Type: S = Split Spoon C = Core UP = Undisturbed Piston V = Vane Shear Test

Proportions Used: Trace = 1 - 10%, Little = 10 - 20%, Some = 20 - 35%, And = 35 - 50%

Total Penetration in

Earth: 68.5ft Rock: ft

No. of Soil Samples: 17 No. of Core Runs: ---

NOTES: Augers advanced to 10 ft. below grade; then 4" FJ casing to 25 ft. below grade; then open hole to end of boring.

Sheet 2 of 3

SM-001-M REV. 1/02

Connecticut DOT Boring Report

Inspector: R. Janeiro	Town: Clinton	Hole No.: RR-22	
Engineer: GeoDesign, Inc.	Project No.: 310-0048	Stat./Offset:	
Start Date: 9-21-10	Route No.:	Northing: 4771.3	
Finish Date: 9-22-10	Bridge No.:	Easting: 10889.6	
Project Description: Shore Line East - 0183-007.00		Surface Elevation: 23.9	
Casing Size/Type: FJ4	Sampler Type/Size: SS / 1-3/8" (ID)	Core Barrel Type:	
Hammer Wt.: 300 lb. Fall: 24in.	Hammer Wt.: 140 lb. Fall: 30 in.		

Groundwater Observations: ⊘None observed after 0 hours, ⊘17.2 ft. after 6 hours, ⊘16.9 ft. after 24 hours

Depth (ft)	Sample Type/No.	Blows on Sampler per 6 inches	Pen. (in.)	Rec. (in.)	RQD %	Generalized Strata Description	Material Description and Notes	Well Construction	Elevation (ft)
50						Silty Sand (con't)			
	S-15	10 11 13 14	24	19			Medium dense, brown fine to medium SAND, little Silt		
						Silt			-30
55	S-16	7 8 12 12	24	21			Medium dense, brown SILT, little fine Sand, with occasional reddish-brown CLAY partings up to 1/16" thick		
						Silty Sand			-35
60	S-17	8 9 15 20	24	17			Medium dense, brown fine SAND and SILT, with occasional orange SILT and CLAY seams layered up to 1/4" thick		-40
65	S-18	15 31 80 76	24	15		Decomposed Rock	Very dense, brown Top 5": fine SAND and SILT Bottom 10": fine to coarse SAND and fine to coarse GRAVEL, little Silt, with decomposed Rock fragments		
	S-19	100/5"	5	5			Very dense, brown fine to coarse SAND, little Silt, trace fine Gravel, with Rock fragments END OF BORING 68.5ft		-45
70									-50
75									

Sample Type: S = Split Spoon C = Core UP = Undisturbed Piston V = Vane Shear Test

Proportions Used: Trace = 1 - 10%, Little = 10 - 20%, Some = 20 - 35%, And = 35 - 50%

Total Penetration in

Earth: 68.5ft Rock: ft

No. of Soil Samples: 17 No. of Core Runs: ---

NOTES: Augers advanced to 10 ft. below grade; then 4" FJ casing to 25 ft. below grade; then open hole to end of boring.

Sheet 3 of 3

SM-001-M REV. 1/02

REV.	DATE	REVISION DESCRIPTION	SHEET NO.

Filename: FD_MSH_BRL_0027_0059_B-102.dgn

THE INFORMATION, INCLUDING ESTIMATED QUANTITIES OF WORK, SHOWN ON THESE SHEETS IS BASED ON LIMITED INVESTIGATIONS BY THE STATE AND IS IN NO WAY WARRANTED TO INDICATE THE CONDITIONS OF ACTUAL QUANTITIES OF WORK WHICH WILL BE REQUIRED.

Date Plotted: October 01, 2014

DESIGNER/DRAFTER: M. BARTELS / R. WRIGHT

CHECKED BY: M. BARTELS

SCALE AS NOTED

STATE OF CONNECTICUT
DEPARTMENT OF TRANSPORTATION

ENGINEER: BAKER ENGINEERING

APPROVED BY: DATE:

PROJECT TITLE:

SHORE LINE EAST RAILROAD STATIONS

TOWN: **CLINTON**

DRAWING TITLE: **BORING LOGS - 2**

PROJECT NO. **310-0059**

DRAWING NO. **B-102**

SHEET NO. **03.05**

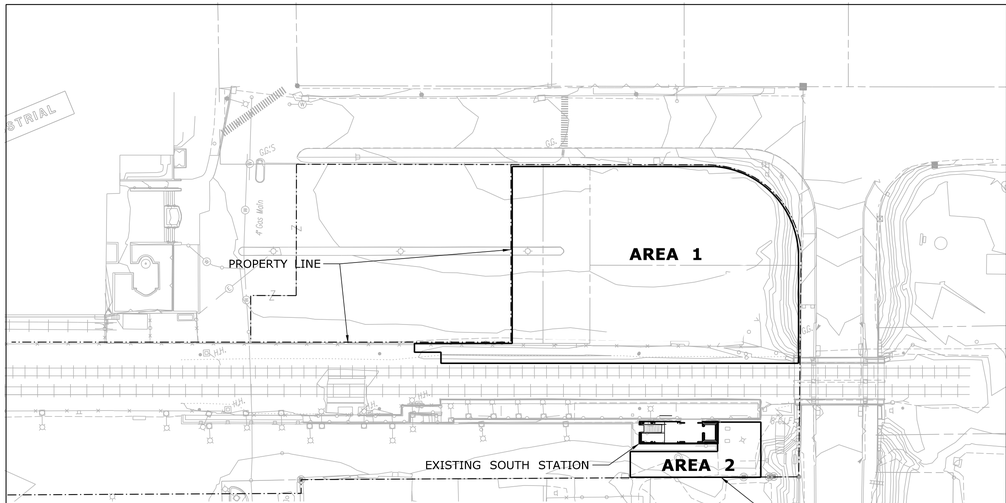

STAGE 1

NORTH SIDE - INSTALL EROSION AND SEDIMENTATION CONTROLS AND PERFORM CLEARING AND GRUBBING. OPEN STAGING AREAS ON NORTH SIDE AND INSTALL TEMPORARY ELECTRICAL SERVICE. INSTALL FIELD TRAILER, ESTABLISH WASTE STOCKPILE AREA AND BEGIN EXCAVATION AND CONSTRUCTION OF NORTH PLATFORM AND PEDESTRIAN OVERPASS TOWER. COMPLY WITH HANDLING AND REMOVAL OF CONTROLLED MATERIALS AS DESCRIBED IN THE ENVIRONMENTAL DRAWINGS AND SPECIFICATIONS.

SOUTH SIDE- INSTALL EROSION AND SEDIMENTATION CONTROLS AROUND ELEVATOR TOWER. ESTABLISH CONTRACTOR LAY-DOWN AREA ADJACENT TO ELEVATOR, KEEPING ACCESS TO ADJACENT PROPERTIES INTACT. POST COMMUTER SIGNS DESCRIBING ANY PLANNED SHUT-DOWNS OR CHANGES TO EXISTING PASSENGER PARKING OR BOARDING.

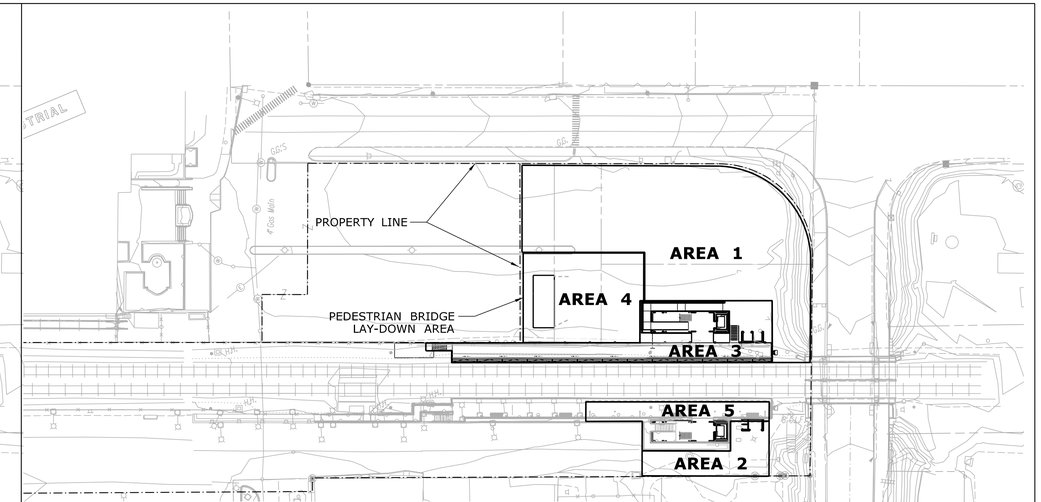

STAGE 2

NORTH SIDE - ERECT NORTH PLATFORM FOUNDATIONS, CANOPY COLUMNS, AND PRECAST. INSTALL REMAINING CANOPY STEEL AND CANOPY ROOF. ERECT NORTH-SIDE PEDESTRIAN OVERPASS STAIR AND ELEVATOR TOWER. ESTABLISH LAY-DOWN AREA FOR THE ASSEMBLY OF THE PEDESTRIAN BRIDGE.

SOUTH SIDE - CLOSE PORTION OF SOUTH-SIDE PLATFORM AND BEGIN REMOVAL AND RELOCATION OF PASSENGER SHELTER TO NORTH-SIDE. ERECT SOUTH-SIDE PEDESTRIAN OVERPASS STAIR AND ELEVATOR TOWER. LIMIT CLOSURES TO THE EXISTING SOUTH PLATFORM TO THE GREATEST EXTENT POSSIBLE.

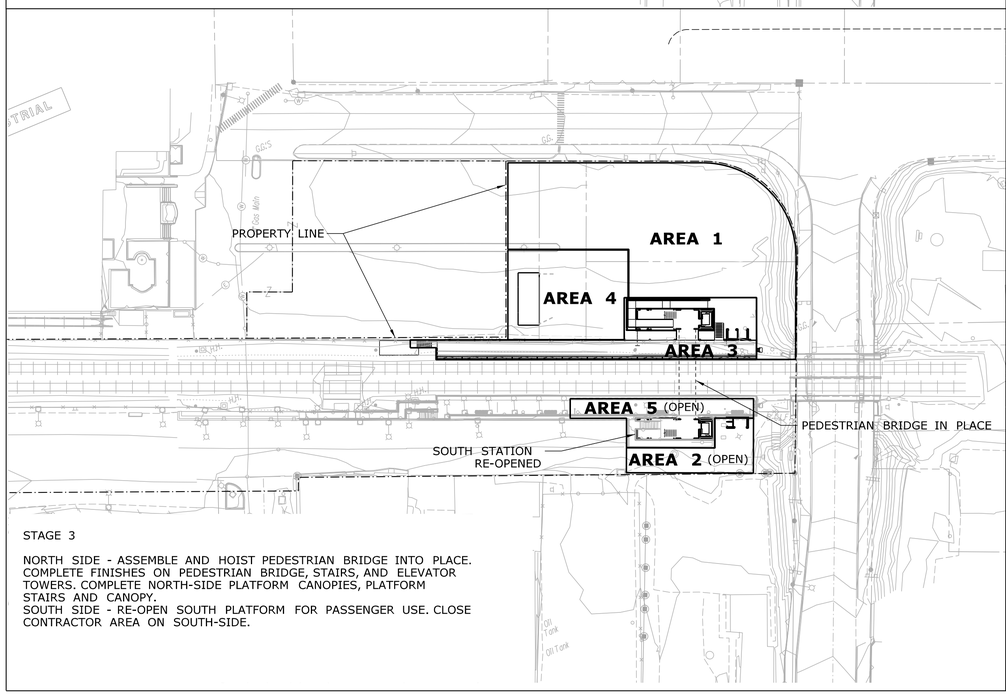

STAGE 3

NORTH SIDE - ASSEMBLE AND HOIST PEDESTRIAN BRIDGE INTO PLACE. COMPLETE FINISHES ON PEDESTRIAN BRIDGE, STAIRS, AND ELEVATOR TOWERS. COMPLETE NORTH-SIDE PLATFORM CANOPIES, PLATFORM STAIRS AND CANOPY.
SOUTH SIDE - RE-OPEN SOUTH PLATFORM FOR PASSENGER USE. CLOSE CONTRACTOR AREA ON SOUTH-SIDE.

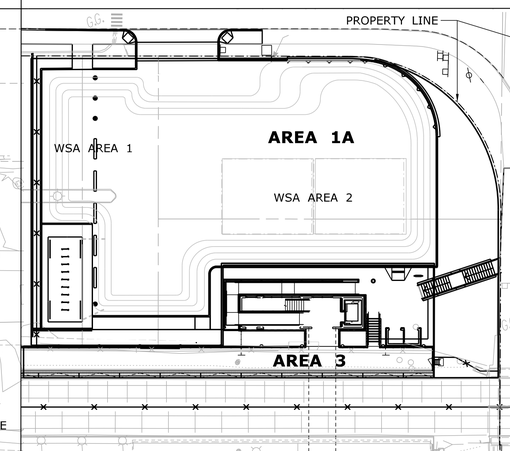

STAGE 4A

1. BEGIN EXCAVATION FOR RECHARGE BED IN AREA 1A. STOCKPILE SOILS IN WASTE STOCKPILE AREA 1. TEST SOILS AND REMOVE EXCAVATED FILL FROM SITE PER ENVIRONMENTAL DRAWINGS AND SPECIFICATIONS. COMPLETE TESTING AND REMOVAL OF SOIL UNTIL AREA 1A IS EXCAVATED TO THE BOTTOM OF THE RECHARGE BED.

2. DISASSEMBLE WASTE STOCKPILE AREA 1 AND RELOCATE BINS TO CREATE STOCKPILE AREA 2.

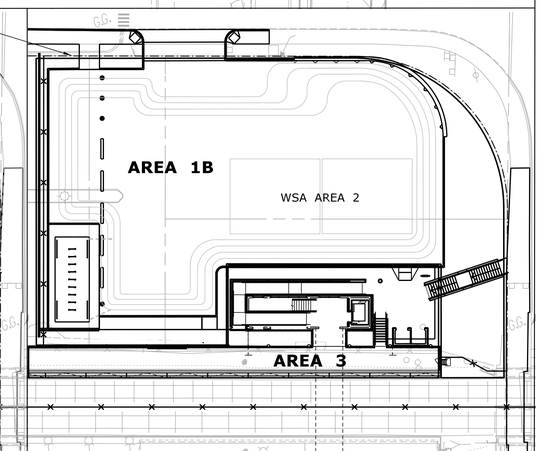

STAGE 4B

1.CONTINUE WITH SITE EXCAVATION ON AREA 1B, STOCKPILING SOILS IN WSA AREA 2. INSTALL THE RETAINING WALL AND SITE STAIR TO HULL STREET. DISASSEMBLE WASTE STOCK PILE AREA 2 AND BACKFILL BEHIND RETAINING WALL. INSTALL RECHARGE BED LINER.

2.INSTALL LIGHT POLE BASES, CONDUIT, WATER LINE, AND DRAINAGE STRUCTURES.

3.BACKFILL RECHARGE BED, INSTALL CHOKE LAYER AND COMPLETE FINAL GRADING. INSTALL POROUS ASPHALT TOP LAYER AND COMPLETE SITEWORK.

4.COMPLETE PUCHLIST, REMOVE PEDESTRIAN BARRIERS AND OPEN NORTH PARKING AREAS FOR PUBLIC USE.

5.REMOVE FIELD TRAILER (SOUTH SIDE) AND REPAIR ASPHALT AROUND TRAILER.

CONTRACT CLOSEOUT.

GENERAL NOTE:
THIS PLAN DELINEATES A RECOMMENDED PHASING FOR CONSTRUCTION OF THE STATION IMPROVEMENTS. PER AMTRAK AND CTDOT REQUIREMENTS, THE CONTRACTOR SHALL FORMALLY SUBMIT A CONSTRUCTION STAGING PLAN FOR REVIEW AND APPROVAL BY AMTRAK AND BY THE ENGINEER.

REV.	DATE	REVISION DESCRIPTION	SHEET NO.
-	-	-	-

Filename: *.dgn

THE INFORMATION, INCLUDING ESTIMATED QUANTITIES OF WORK, SHOWN ON THESE SHEETS IS BASED ON LIMITED INVESTIGATIONS BY THE STATE AND IS IN NO WAY WARRANTED TO INDICATE THE CONDITIONS OF ACTUAL QUANTITIES OF WORK WHICH WILL BE REQUIRED.

Date Plotted: October 01, 2014

DESIGNER/DRAFTER:

CHECKED BY:

SCALE IN FEET
0 20 40
SCALE 1"=20'

STATE OF CONNECTICUT
DEPARTMENT OF TRANSPORTATION

ENGINEER: BAKER ENGINEERING

APPROVED BY:

DATE:

PROJECT TITLE:
SHORE LINE EAST
RAILROAD STATIONS

TOWN:
CLINTON

DRAWING TITLE:
STAGING PLAN

PROJECT NO. 310-0059
DRAWING NO. C-001
SHEET NO. 03.06

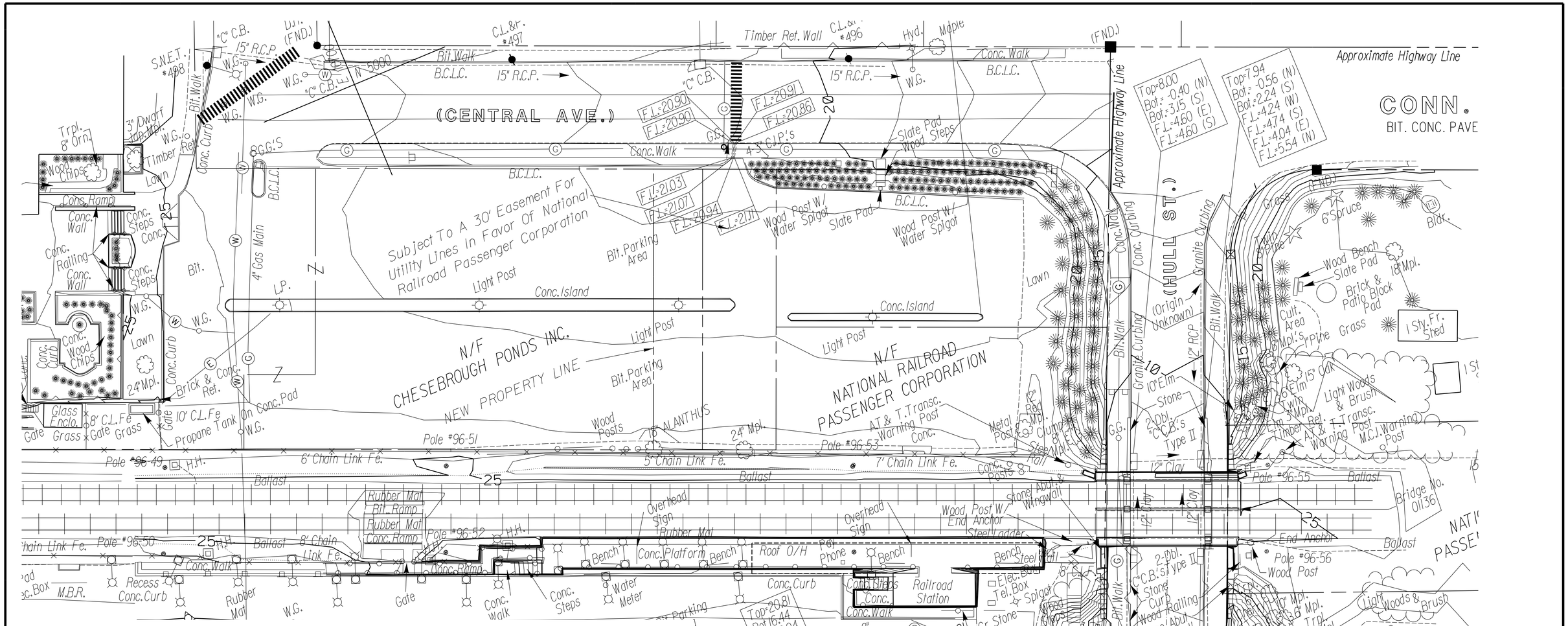

REVISIONS			
NO.	DATE	DESCRIPTION	REV. BY
1	11/16/99	BASELINES & TOP OF RAIL	J.J.M.
		ELEVS. ADDED	
2	9-7-00	UPDATED TITLE SEARCH INFO. PER	J.L.B.
		MEMO DATED JUNE1,2000.	
3	04-18-01	REVISED TO SHOW APPROX.	J.J.M.
		AMTRAK STATIONNG	
4	04-25-01	REVISE SIZE OF CAT. POLES	J.J.M.
5	11-30-06	PLANIMETRIC ASBUILT, CENTRAL AVENUE	J.J.M.
		TOPOGRAPHY & TOP OF RAIL ELEVS	
6	01-18-07	ADD. TOPOGRAPHY REQUEST	J.J.M.
7	03-15-07	ADD. TOPOGRAPHY REQUEST	J.J.M.

NOTES:

1.) SURVEY BY CONN. DOT DISTRICT 2
2.) FIELD BOOK: 310-0007
3.) 400 FOOT GRID BASED ON ASSUMED DATUM.
4.) VERTICAL DATUM BASED ON NGVD OF 1988.
5.) ALL UNDERGROUND UTILITIES SHOULD BE CONSIDERED APPROXIMATE LOCATIONS.
6.) PROPERTY LINES, PROPERTY NAMES & STREET LINES WERE PLOTTED FROM SURVEY MAPS, DEED DESCRIPTIONS & ASSESSORS MAPS OBTAINED FROM TOWN CLERK'S OFFICE IN CLINTON AND VARIOUS SURVEY MAPS & RAILROAD MAPS OBTAINED FROM THE STATE OF CONNECTICUT DIST2. OFFICE.

STATE OF CONNECTICUT
DEPARTMENT OF TRANSPORTATION
BUREAU OF ENG.& HWY.OPERATIONS

SHORELINE EAST RAILROAD STATION
IN THE TOWN OF
CLINTON

PROJECT NO. 310-0007

PLANIMETRIC MAP

40 0 40 80 120 160

SCALE: 1" = 40'

AUGUST 1998

B. JORDAN
TRANSPORTATION PRINCIPAL ENGR.

C. PANTELEAKOS
TRANS. DISTRICT ENGR.

SURVEYED BY: A. HOLOWATY & J. BECKWITH
PLOTTED BY: J. BECKWITH
Using EAGLE POINT SOFTWARE
EDITED BY: J. BECKWITH & F. ORLANDO
CHECKED BY: C. LACHANCE

310000070.GRN

SURVEY PLAN
SCALE: 1" = 20'-0"

REV.	DATE	REVISION DESCRIPTION	SHEET NO.
-	-	-	-

Filename: *.dgn

THE INFORMATION, INCLUDING ESTIMATED QUANTITIES OF WORK, SHOWN ON THESE SHEETS IS BASED ON LIMITED INVESTIGATIONS BY THE STATE AND IS IN NO WAY WARRANTED TO INDICATE THE CONDITIONS OF ACTUAL QUANTITIES OF WORK WHICH WILL BE REQUIRED.

Date Plotted: October 01, 2014

DESIGNER/DRAFTER: PB
CHECKED BY: ALM
SCALE IN FEET 0 20 40
SCALE 1"=20'

STATE OF CONNECTICUT
DEPARTMENT OF TRANSPORTATION

ENGINEER: BAKER ENGINEERING
APPROVED BY:
DATE:

PROJECT TITLE:
SHORE LINE EAST RAILROAD STATIONS

TOWN: **CLINTON**

DRAWING TITLE: **SURVEY PLAN**

PROJECT NO. **310-0059**
DRAWING NO. **C-100**
SHEET NO. **03.07**

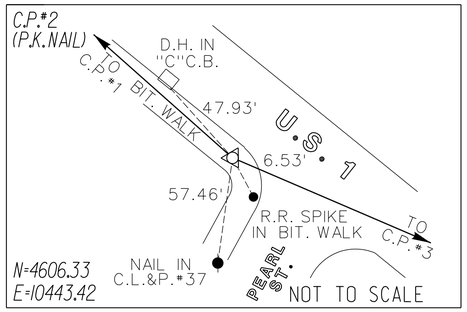

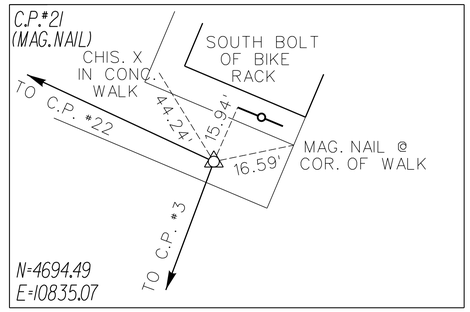

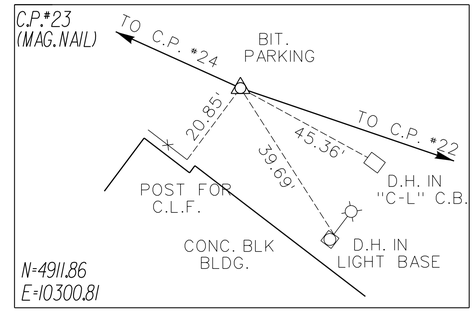

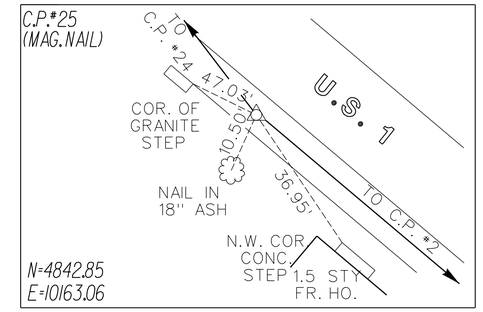

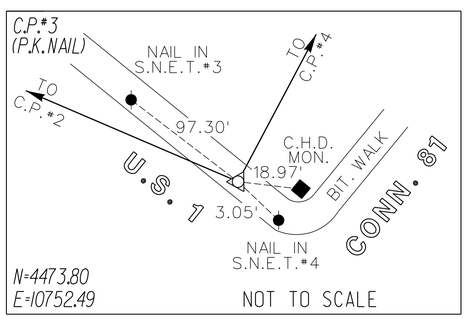

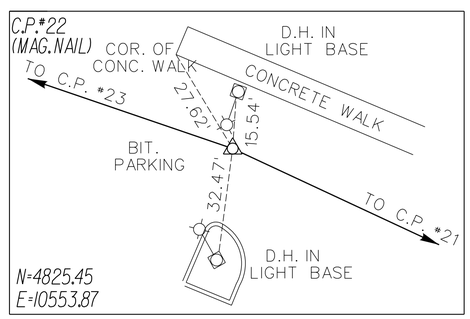

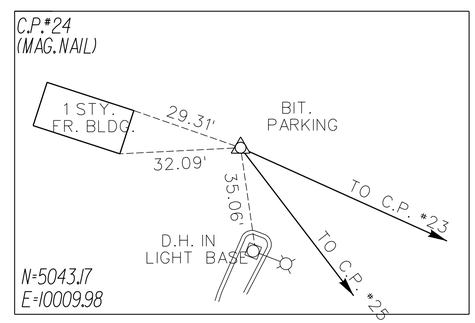

N

BASELINE TIES

SCALE: N.T.S.

REV.	DATE	REVISION DESCRIPTION	SHEET NO.
-	-	-	-

Filename: *.dgn

THE INFORMATION, INCLUDING ESTIMATED QUANTITIES OF WORK, SHOWN ON THESE SHEETS IS BASED ON LIMITED INVESTIGATIONS BY THE STATE AND IS IN NO WAY WARRANTED TO INDICATE THE CONDITIONS OF ACTUAL QUANTITIES OF WORK WHICH WILL BE REQUIRED.

Date Plotted: October 01, 2014

DESIGNER/DRAFTER: PB

CHECKED BY: ALM

SCALE AS NOTED

STATE OF CONNECTICUT
DEPARTMENT OF TRANSPORTATION

ENGINEER: BAKER ENGINEERING

APPROVED BY: DATE:

PROJECT TITLE: SHORE LINE EAST RAILROAD STATIONS

TOWN: CLINTON

DRAWING TITLE: BASELINE TIES

PROJECT NO. 310-0059

DRAWING NO. C-101

SHEET NO. 03.08

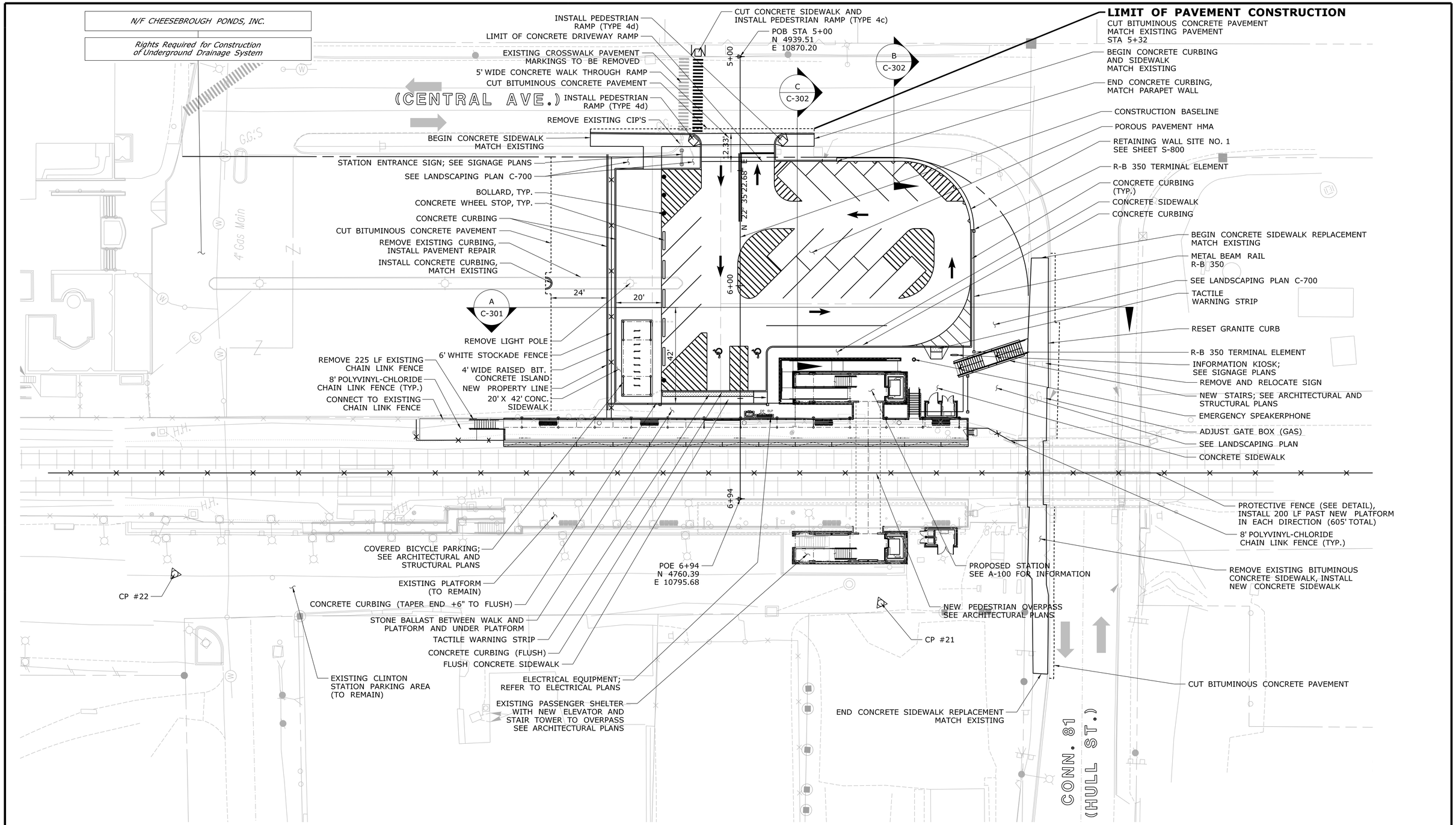

SITE PLAN

SCALE: 1" = 20'-0"

REV.	DATE	REVISION DESCRIPTION	SHEET NO.
-	-	-	-

Filename: *.dgn

THE INFORMATION, INCLUDING ESTIMATED QUANTITIES OF WORK, SHOWN ON THESE SHEETS IS BASED ON LIMITED INVESTIGATIONS BY THE STATE AND IS IN NO WAY WARRANTED TO INDICATE THE CONDITIONS OF ACTUAL QUANTITIES OF WORK WHICH WILL BE REQUIRED.

Date Plotted: October 01, 2014

DESIGNER/DRAFTER: PB
CHECKED BY: ALM
SCALE IN FEET 0 20 40
SCALE 1"=20'

STATE OF CONNECTICUT
DEPARTMENT OF TRANSPORTATION

ENGINEER: BAKER ENGINEERING
APPROVED BY:
DATE:

PROJECT TITLE:
SHORE LINE EAST RAILROAD STATIONS

TOWN: **CLINTON**

DRAWING TITLE: **SITE PLAN**

PROJECT NO. **310-0059**
DRAWING NO. **C-102**
SHEET NO. **03.09**

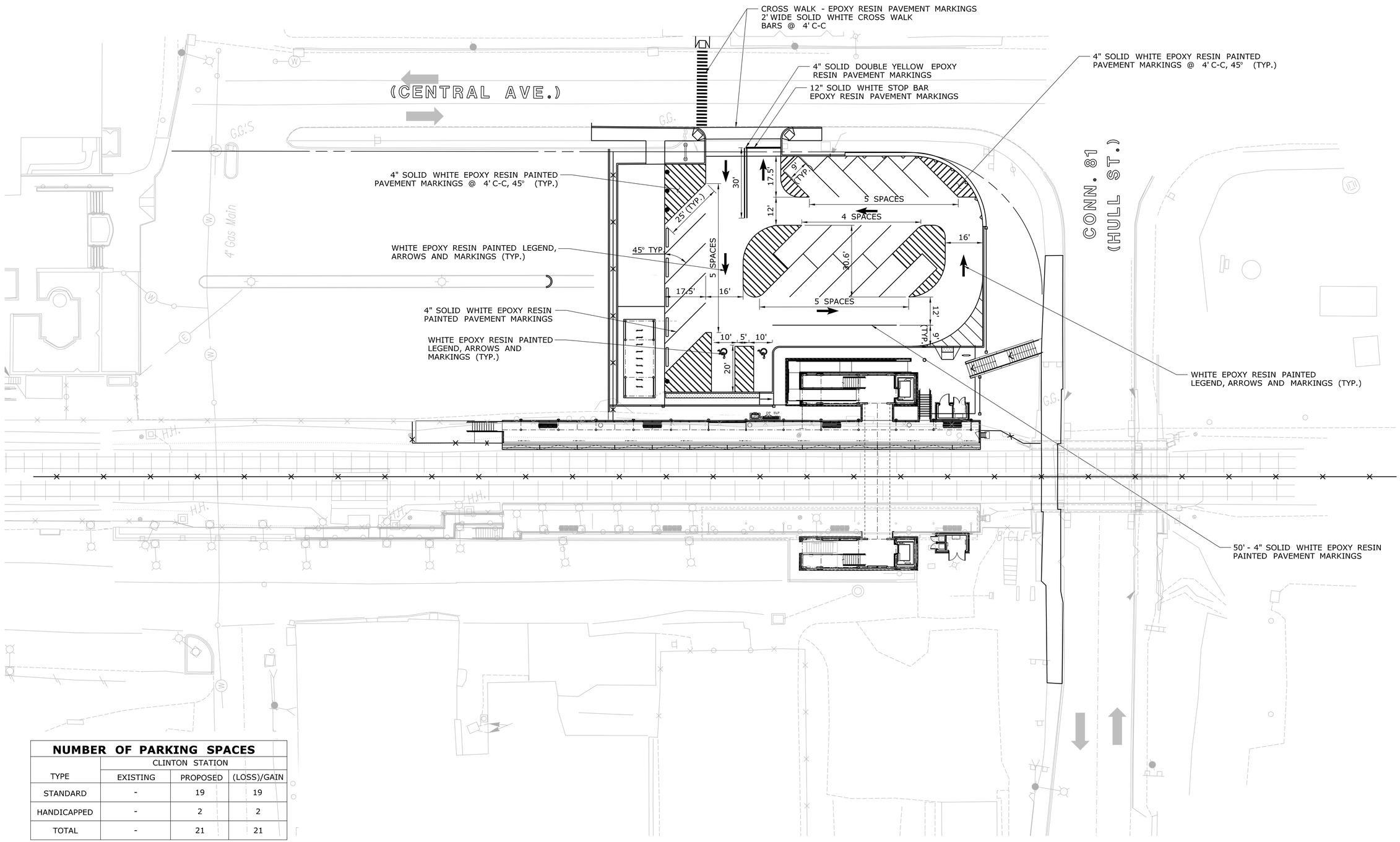

NUMBER OF PARKING SPACES			
TYPE	CLINTON STATION		
	EXISTING	PROPOSED	(LOSS)/GAIN
STANDARD	-	19	19
HANDICAPPED	-	2	2
TOTAL	-	21	21

N

STRIPING PLAN

SCALE: 1" = 20'-0"

REV.	DATE	REVISION DESCRIPTION	SHEET NO.
-	-	-	-

Filename: *.dgn

THE INFORMATION, INCLUDING ESTIMATED QUANTITIES OF WORK, SHOWN ON THESE SHEETS IS BASED ON LIMITED INVESTIGATIONS BY THE STATE AND IS IN NO WAY WARRANTED TO INDICATE THE CONDITIONS OF ACTUAL QUANTITIES OF WORK WHICH WILL BE REQUIRED.

Date Plotted: October 01, 2014

DESIGNER/DRAFTER: PB

CHECKED BY: ALM

SCALE IN FEET 0 20 40

SCALE 1"=20'

STATE OF CONNECTICUT
DEPARTMENT OF TRANSPORTATION

ENGINEER: BAKER ENGINEERING

APPROVED BY:

DATE:

PROJECT TITLE:

SHORE LINE EAST
RAILROAD STATIONS

TOWN: CLINTON

DRAWING TITLE: STRIPING PLAN

PROJECT NO. 310-0059

DRAWING NO. C-103

SHEET NO. 03.10

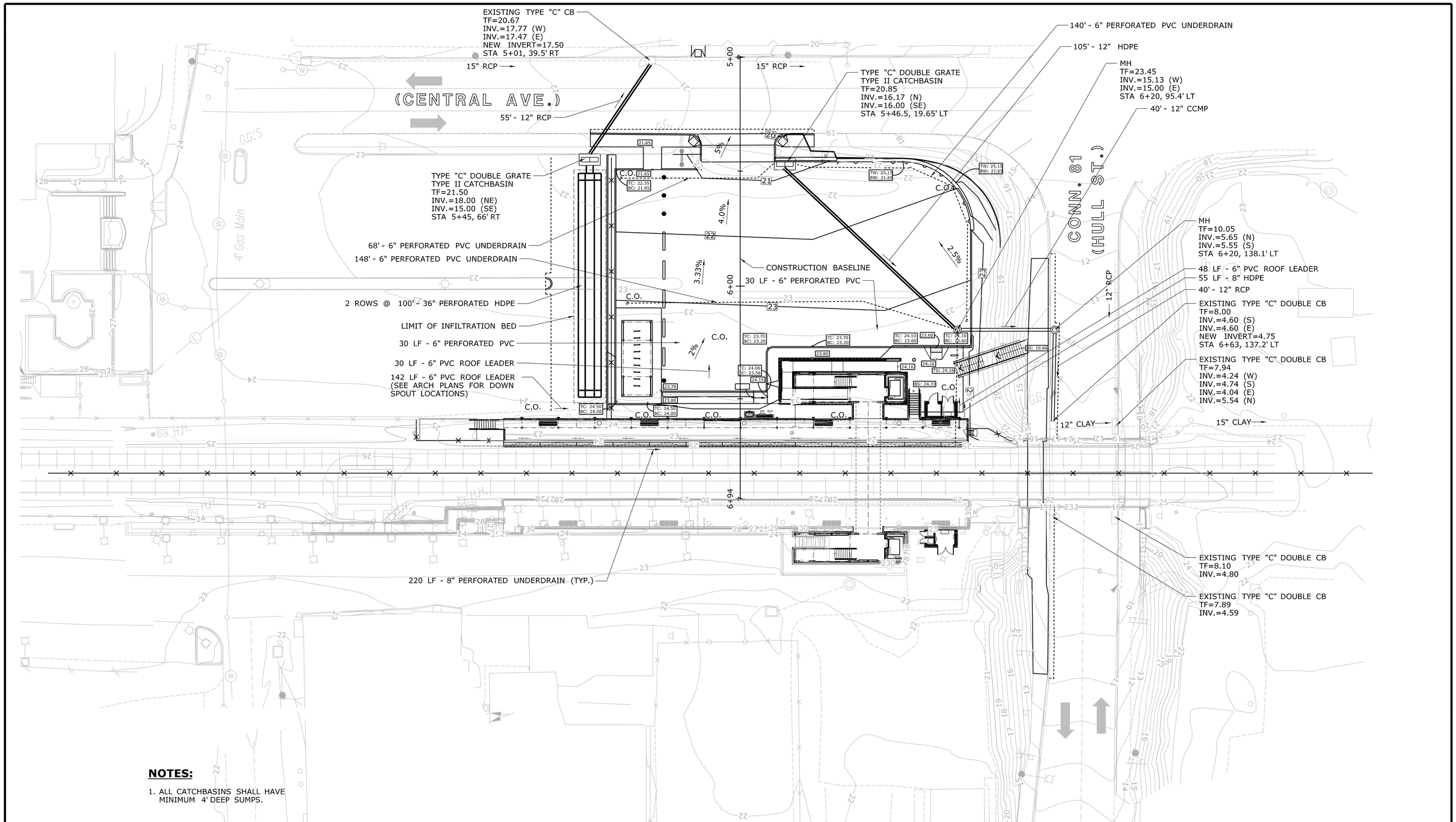

NOTES:

1. ALL CATCHBASINS SHALL HAVE MINIMUM 4' DEEP SUMPS.

GRADING PLAN

SCALE: 1" = 20'-0"

REV.	DATE	REVISION DESCRIPTION	SHEET NO.
-	-	-	-

Filename: *.dgn

THE INFORMATION, INCLUDING ESTIMATED QUANTITIES OF WORK, SHOWN ON THESE SHEETS IS BASED ON LIMITED INVESTIGATIONS BY THE STATE AND IS IN NO WAY WARRANTED TO INDICATE THE CONDITIONS OF ACTUAL QUANTITIES OF WORK WHICH WILL BE REQUIRED.

Date Plotted: October 01, 2014

DESIGNER/DRAFTER: PB

CHECKED BY: ALM

SCALE IN FEET 0 20 40

SCALE 1"=20'

STATE OF CONNECTICUT
DEPARTMENT OF TRANSPORTATION

ENGINEER: BAKER ENGINEERING

APPROVED BY:

DATE:

PROJECT TITLE:

SHORE LINE EAST RAILROAD STATIONS

TOWN: **CLINTON**

DRAWING TITLE: **GRADING PLAN**

PROJECT NO. **310-0059**

DRAWING NO. **C-104**

SHEET NO. **03.11**

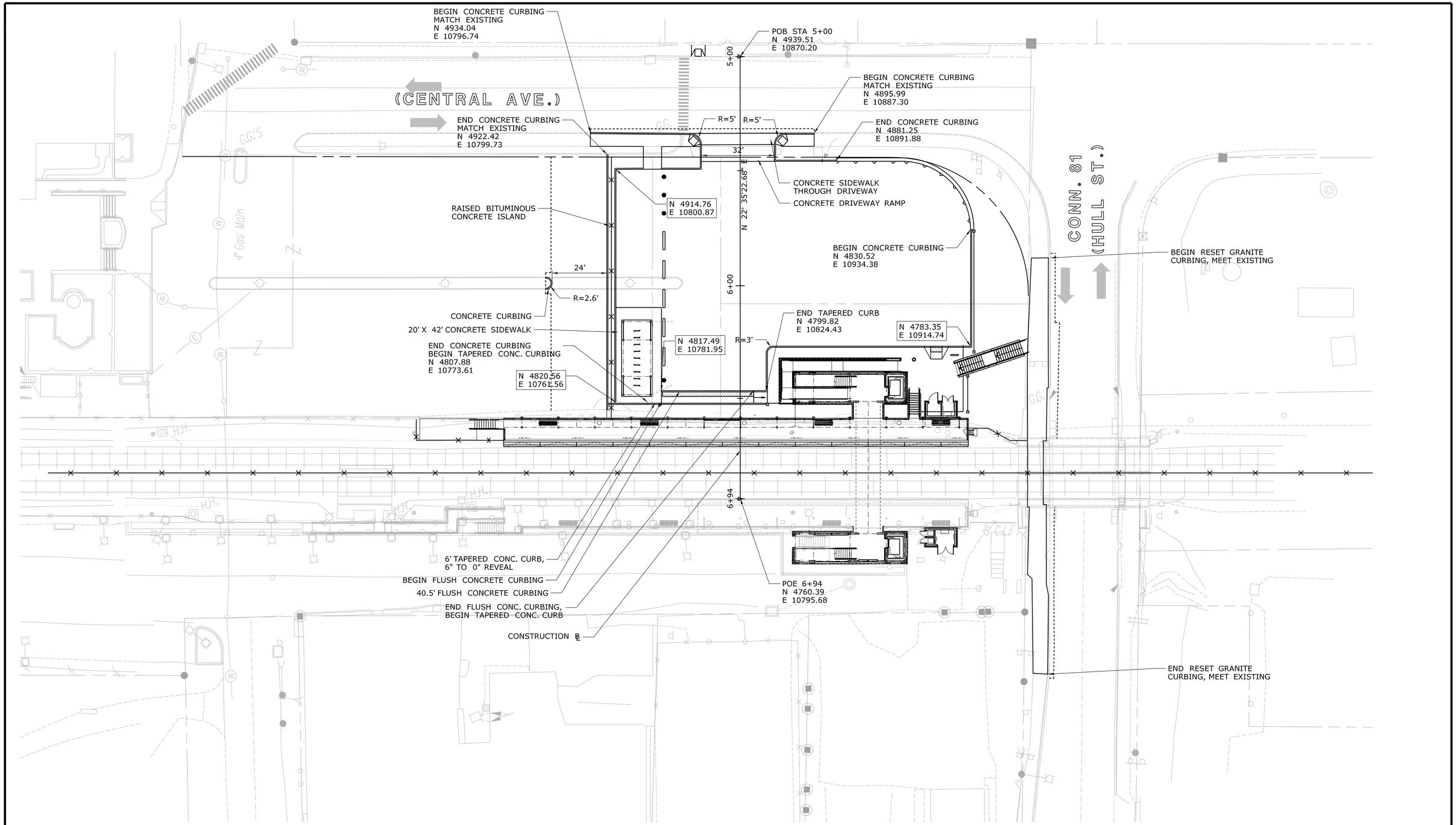

CURB LAYOUT PLAN

SCALE: 1" = 20'-0"

REV.	DATE	REVISION DESCRIPTION	SHEET NO.
-	-	-	-

Filename: *.dgn

THE INFORMATION, INCLUDING ESTIMATED QUANTITIES OF WORK, SHOWN ON THESE SHEETS IS BASED ON LIMITED INVESTIGATIONS BY THE STATE AND IS IN NO WAY WARRANTED TO INDICATE THE CONDITIONS OF ACTUAL QUANTITIES OF WORK WHICH WILL BE REQUIRED.

Date Plotted: October 01, 2014

DESIGNER/DRAFTER: PB

CHECKED BY: ALM

SCALE IN FEET 0 20 40

SCALE 1"=20'

STATE OF CONNECTICUT
DEPARTMENT OF TRANSPORTATION

ENGINEER: BAKER ENGINEERING

APPROVED BY: DATE:

PROJECT TITLE:

SHORE LINE EAST RAILROAD STATIONS

TOWN: **CLINTON**

DRAWING TITLE: **CURB LAYOUT PLAN**

PROJECT NO. **310-0059**

DRAWING NO. **C-105**

SHEET NO. **03.12**

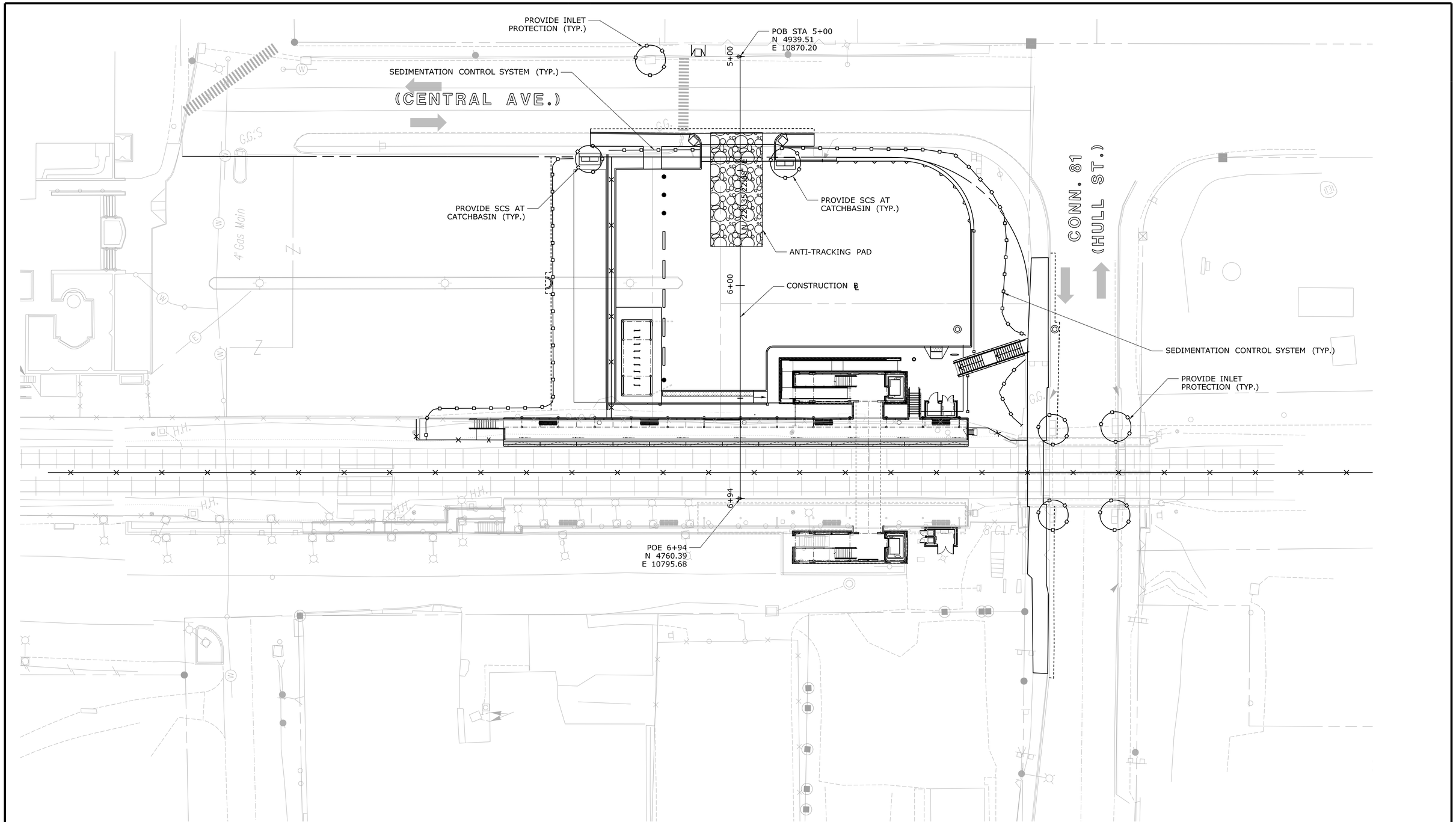

N

SEDIMENTATION AND EROSION CONTROL PLAN

SCALE: 1" = 20'-0"

REV.	DATE	REVISION DESCRIPTION	SHEET NO.
-	-	-	-

Filename:

THE INFORMATION, INCLUDING ESTIMATED QUANTITIES OF WORK, SHOWN ON THESE SHEETS IS BASED ON LIMITED INVESTIGATIONS BY THE STATE AND IS IN NO WAY WARRANTED TO INDICATE THE CONDITIONS OF ACTUAL QUANTITIES OF WORK WHICH WILL BE REQUIRED.

Date Plotted: October 01, 2014

DESIGNER/DRAFTER: PB

CHECKED BY: ALM

SCALE IN FEET

0 20 40

SCALE 1"=20'

STATE OF CONNECTICUT
DEPARTMENT OF TRANSPORTATION

ENGINEER: BAKER ENGINEERING

APPROVED BY:

DATE:

PROJECT TITLE:

SHORE LINE EAST RAILROAD STATIONS

TOWN: **CLINTON**

DRAWING TITLE: **SEDIMENTATION AND EROSION CONTROL PLAN**

PROJECT NO. **310-0059**

DRAWING NO. **C-106**

SHEET NO. **03.13**

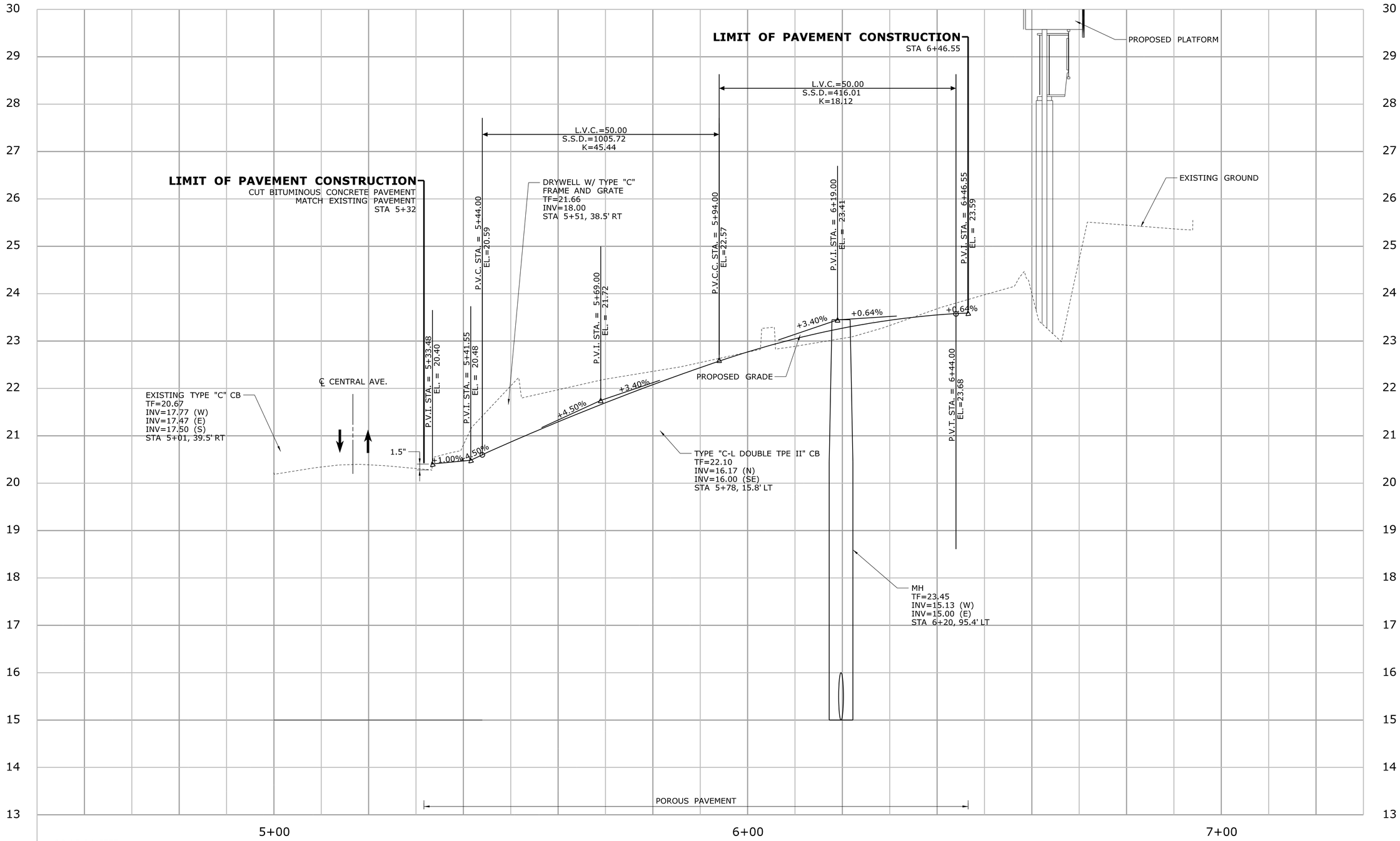

PROFILE VIEW

SCALE: 1" = 10'-0"

REV.	DATE	REVISION DESCRIPTION	SHEET NO.
-	-	-	-

Filename:

THE INFORMATION, INCLUDING ESTIMATED QUANTITIES OF WORK, SHOWN ON THESE SHEETS IS BASED ON LIMITED INVESTIGATIONS BY THE STATE AND IS IN NO WAY WARRANTED TO INDICATE THE CONDITIONS OF ACTUAL QUANTITIES OF WORK WHICH WILL BE REQUIRED.

Date Plotted: October 01, 2014

DESIGNER/DRAFTER: CJF

CHECKED BY: ALM

SCALE AS NOTED

STATE OF CONNECTICUT
DEPARTMENT OF TRANSPORTATION

ENGINEER: BAKER ENGINEERING

APPROVED BY: - DATE: -

PROJECT TITLE:

SHORE LINE EAST RAILROAD STATIONS

TOWN: **CLINTON**

DRAWING TITLE: **PROFILE VIEW**

PROJECT NO. **310-0059**

DRAWING NO. **C-300**

SHEET NO. **03.14**

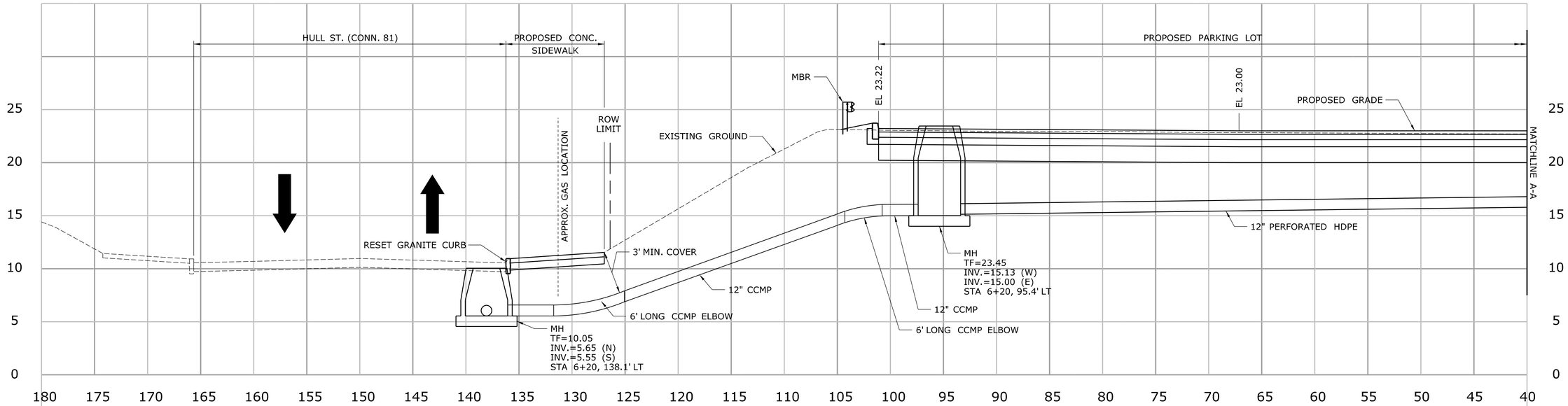

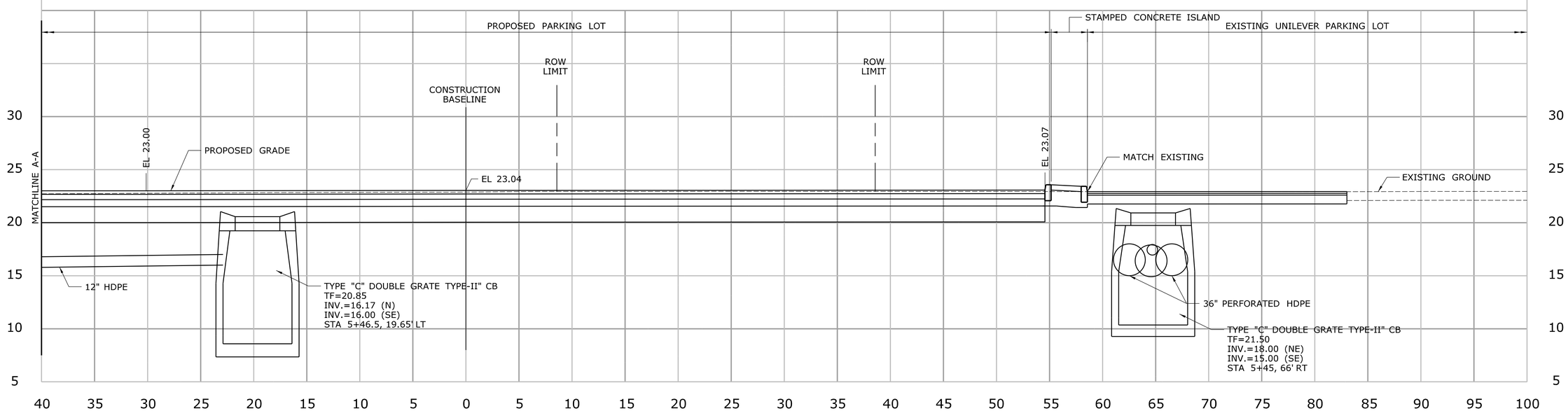

SECTION AT STA 6+10

SCALE: 1" = 5-0"

A / C-102

REV.	DATE	REVISION DESCRIPTION	SHEET NO.
-	-	-	-

Filename: *.dgn

THE INFORMATION, INCLUDING ESTIMATED QUANTITIES OF WORK, SHOWN ON THESE SHEETS IS BASED ON LIMITED INVESTIGATIONS BY THE STATE AND IS IN NO WAY WARRANTED TO INDICATE THE CONDITIONS OF ACTUAL QUANTITIES OF WORK WHICH WILL BE REQUIRED.

Date Plotted: October 01, 2014

DESIGNER/DRAFTER: CJF

CHECKED BY: ALM

SCALE IN FEET 0 5 10

SCALE 1"=5'

STATE OF CONNECTICUT
DEPARTMENT OF TRANSPORTATION

ENGINEER: BAKER ENGINEERING

APPROVED BY: - DATE: -

PROJECT TITLE:

SHORE LINE EAST RAILROAD STATIONS

TOWN: **CLINTON**

DRAWING TITLE: **CROSS SECTIONS I**

PROJECT NO. **310-0059**

DRAWING NO. **C-301**

SHEET NO. **03.15**

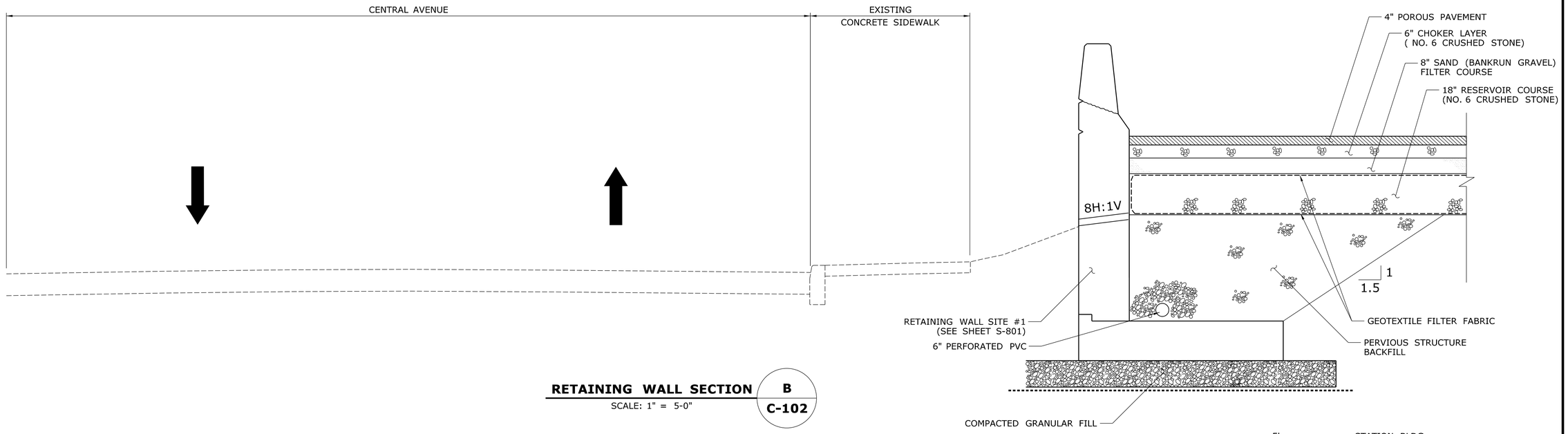

RETAINING WALL SECTION B / C-102

SCALE: 1" = 5-0"

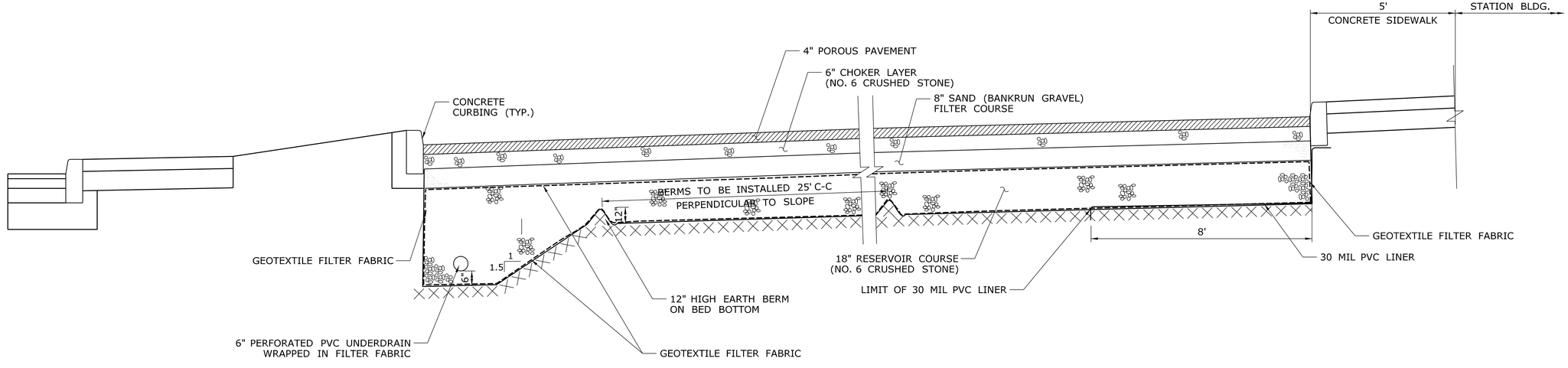

POROUS PAVEMENT WITH INFILTRATION BED C / C-102

SCALE: 1" = 2'-0"

REV.	DATE	REVISION DESCRIPTION	SHEET NO.
-	-	-	-

Filename: *.dgn

THE INFORMATION, INCLUDING ESTIMATED QUANTITIES OF WORK, SHOWN ON THESE SHEETS IS BASED ON LIMITED INVESTIGATIONS BY THE STATE AND IS IN NO WAY WARRANTED TO INDICATE THE CONDITIONS OF ACTUAL QUANTITIES OF WORK WHICH WILL BE REQUIRED.

Date Plotted: October 01, 2014

DESIGNER/DRAFTER: CJF

CHECKED BY: ALM

SCALE IN FEET 0 2 4

SCALE 1"=2'

STATE OF CONNECTICUT
DEPARTMENT OF TRANSPORTATION

ENGINEER: BAKER ENGINEERING

APPROVED BY: - DATE: -

STATE OF CONNECTICUT · DELAWARE · No. 19079 · LICENSED · PROFESSIONAL ENGINEER

PROJECT TITLE:

SHORE LINE EAST RAILROAD STATIONS

TOWN: **CLINTON**

DRAWING TITLE: **CROSS SECTIONS II**

PROJECT NO. **310-0059**

DRAWING NO. **C-302**

SHEET NO. **03.16**

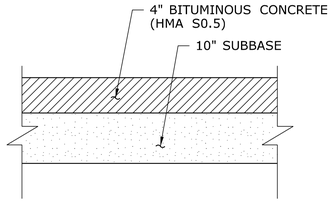

TYPICAL FULL DEPTH BITUMINOUS CONCRETE PAVEMENT STRUCTURE (UNILEVER LOT)

SCALE: N.T.S.

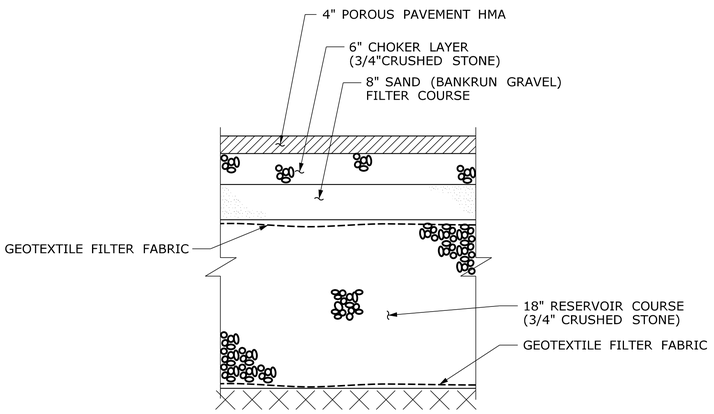

TYPICAL POROUS PAVEMENT WITH INFILTRATION BED

SCALE: N.T.S.

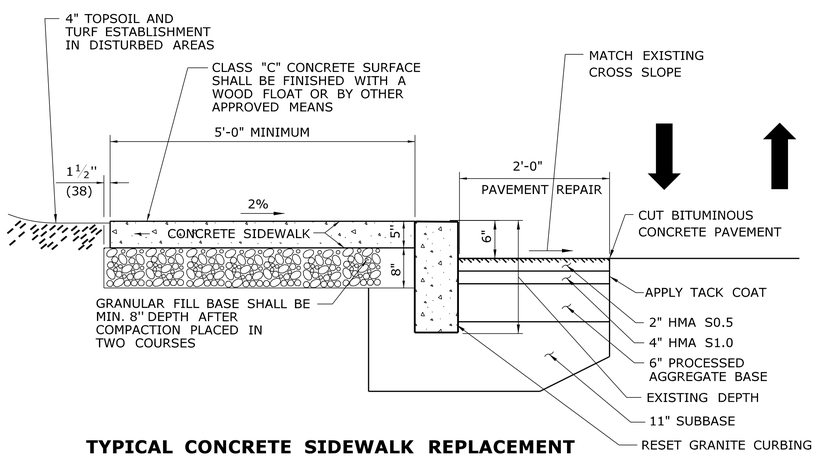

TYPICAL CONCRETE SIDEWALK REPLACEMENT WITH RESET GRANITE CURB AND PAVEMENT REPAIR

SCALE: N.T.S.

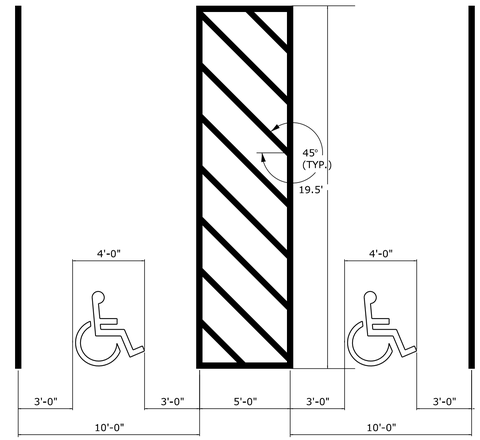

TYPICAL ACCESSIBLE PARKING SPACE PAVEMENT MARKINGS

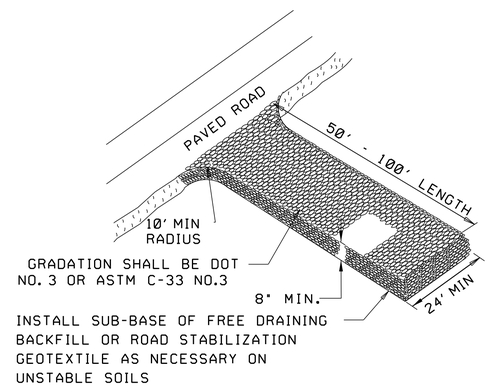

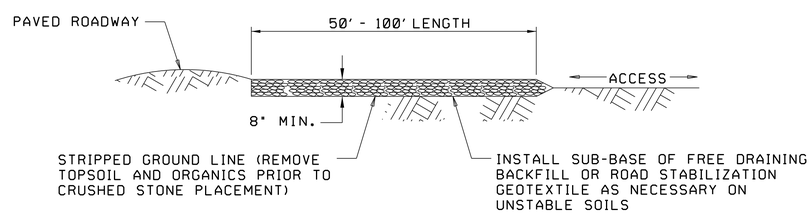

TYPICAL ANTI-TRACKING PAD

SCALE: N.T.S.

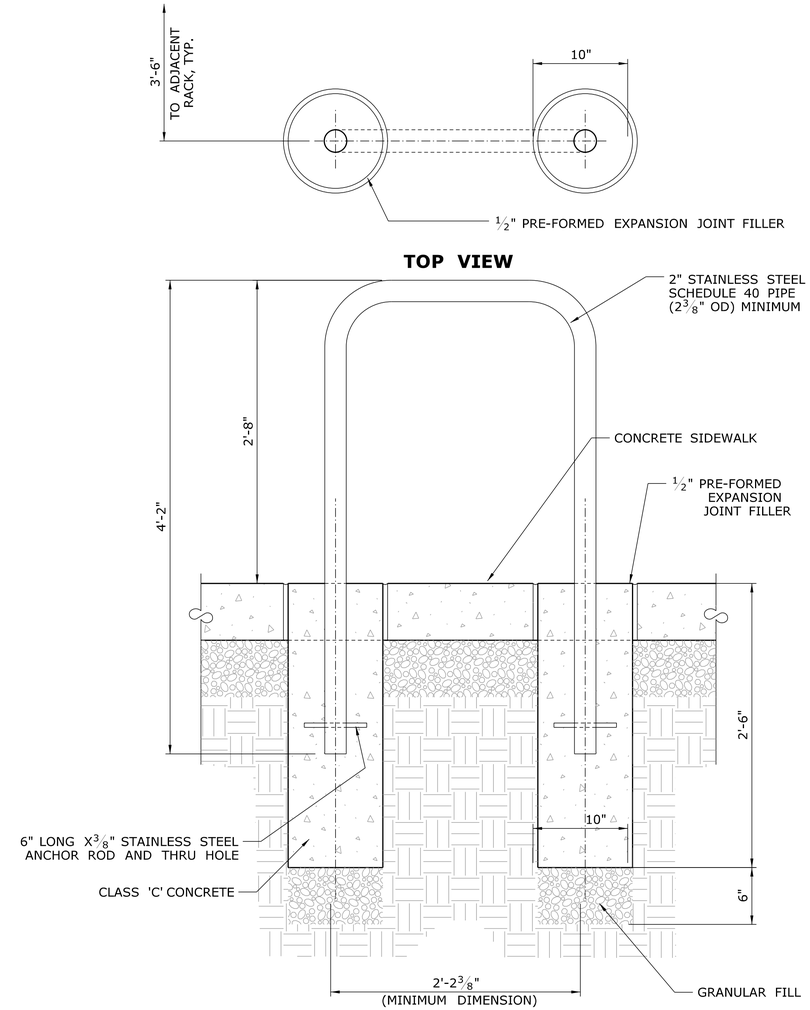

BICYCLE RACK DETAIL

SCALE: N.T.S.

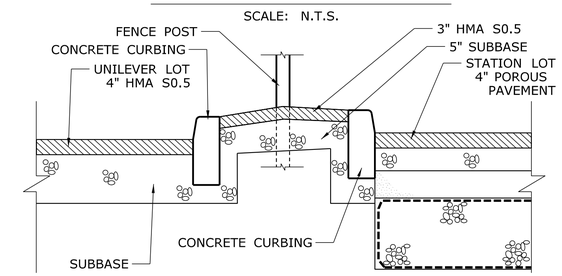

RAISED BITUMINOUS CONCRETE ISLAND

SCALE: N.T.S.

REV.	DATE	REVISION DESCRIPTION	SHEET NO.
-	-	-	-

Filename: FD_MSH_DET_0027_0059_C-500.dgn

THE INFORMATION, INCLUDING ESTIMATED QUANTITIES OF WORK, SHOWN ON THESE SHEETS IS BASED ON LIMITED INVESTIGATIONS BY THE STATE AND IS IN NO WAY WARRANTED TO INDICATE THE CONDITIONS OF ACTUAL QUANTITIES OF WORK WHICH WILL BE REQUIRED.

Date Plotted: October 01, 2014

DESIGNER/DRAFTER: CSB
CHECKED BY: ALM
SCALE AS NOTED

STATE OF CONNECTICUT
DEPARTMENT OF TRANSPORTATION

ENGINEER: BAKER ENGINEERING
APPROVED BY:
DATE:

PROJECT TITLE:
SHORE LINE EAST
RAILROAD STATIONS

TOWN: CLINTON

DRAWING TITLE:
MISCELLANEOUS
DETAILS - I

PROJECT NO. 310-0059
DRAWING NO. C-500
SHEET NO. 03.17

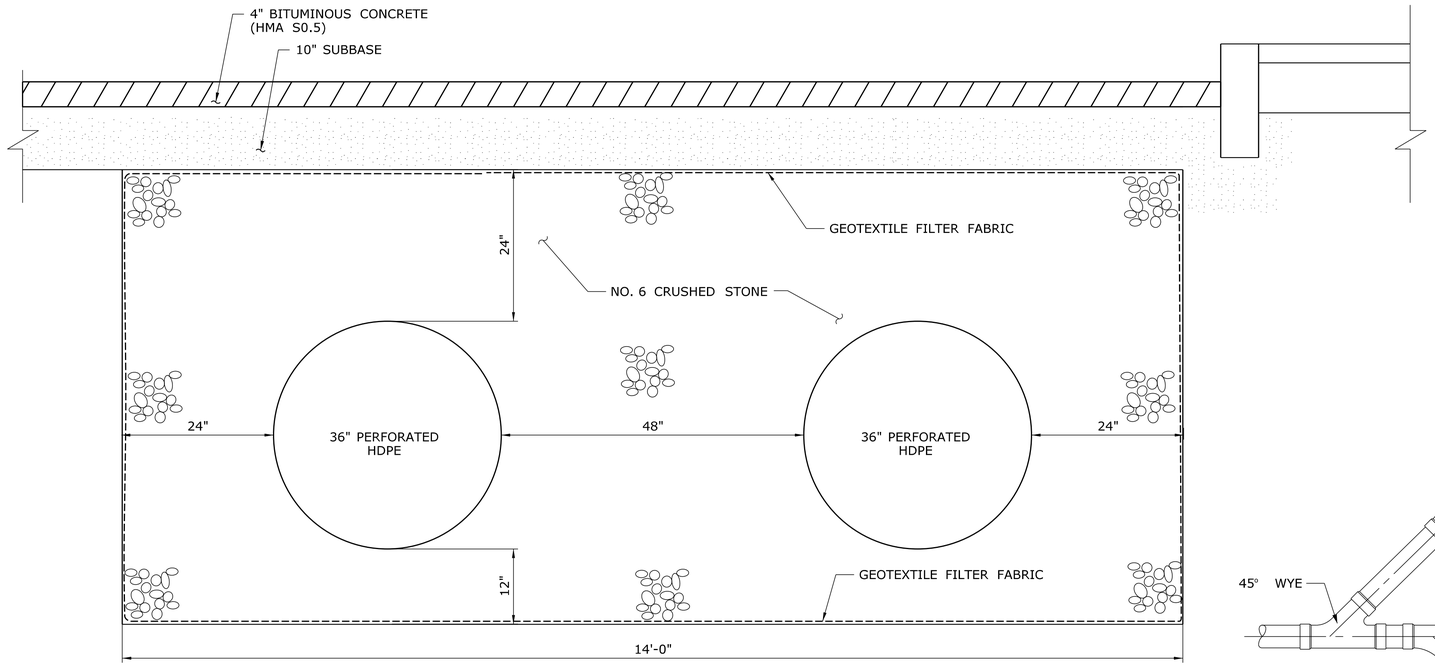

UNDERGROUND INFILTRATION PIPES (UNILEVER LOT)

SCALE: N.T.S.

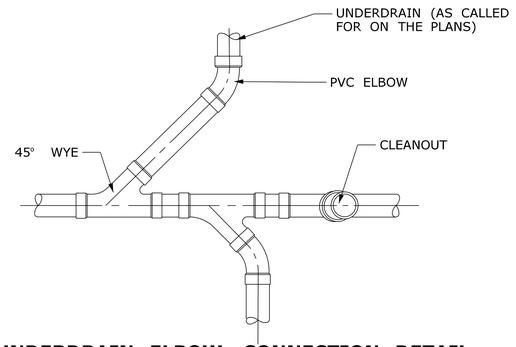

UNDERDRAIN ELBOW CONNECTION DETAIL

SCALE: N.T.S.

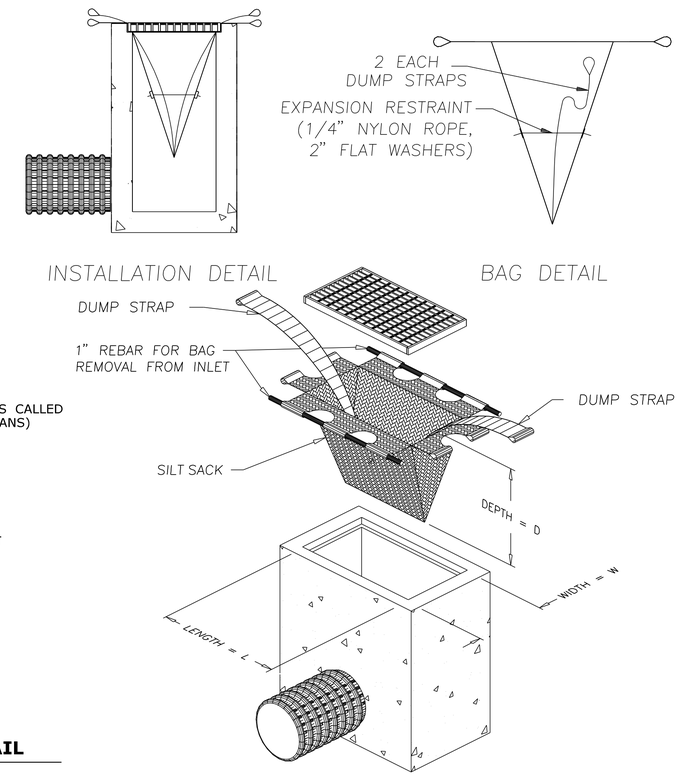

INLET PROTECTION DEVICE IN CATCHBASIN

SCALE: N.T.S.

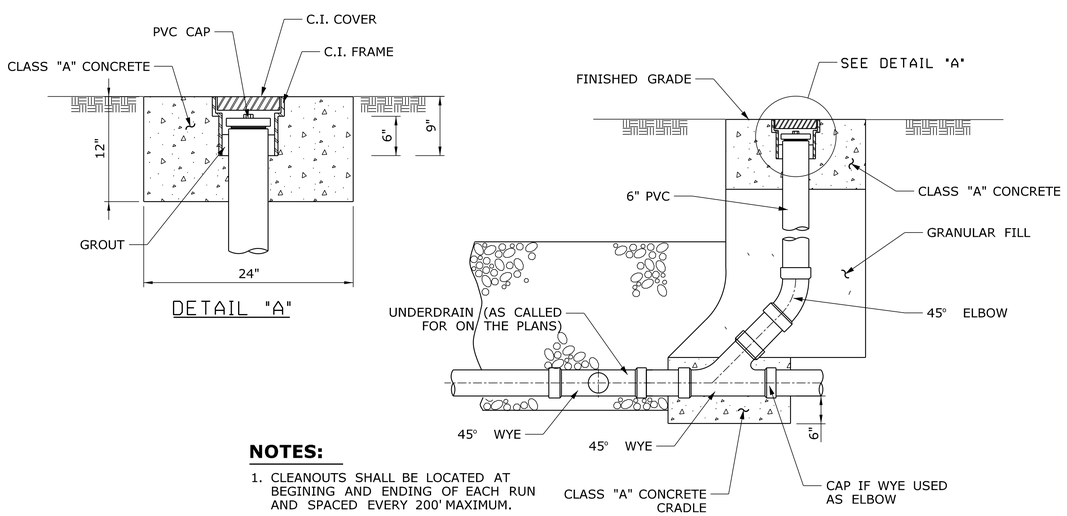

NOTES:

1. CLEANOUTS SHALL BE LOCATED AT BEGINING AND ENDING OF EACH RUN AND SPACED EVERY 200' MAXIMUM.
2. COST OF CLEANOUTS SHALL BE INCLUDED IN THE UNIT PRICE FOR UNDERDRAIN

UNDERDRAIN CLEANOUT DETAIL

SCALE: N.T.S.

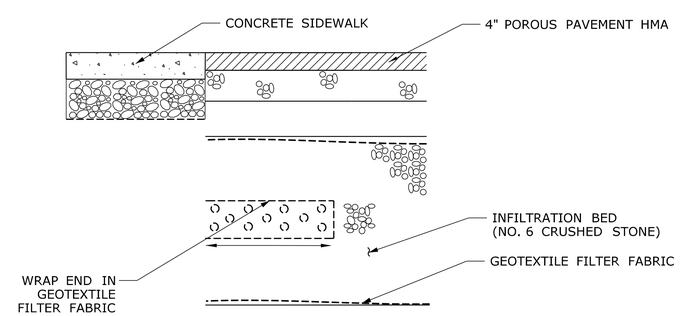

BIKE RACK CANOPY DOWNSPOUT DISCHARGE TO INFILTRATION BED DETAIL

SCALE: N.T.S.

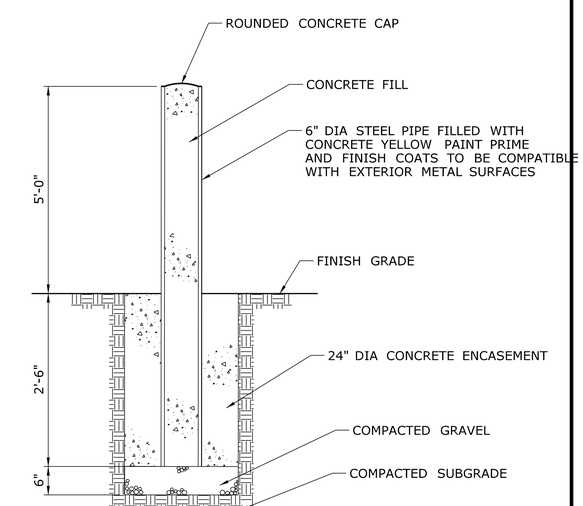

STEEL BOLLARD

N.T.S.

REV.	DATE	REVISION DESCRIPTION	SHEET NO.

Filename: FD_MSH_DET_0154_0062_C-503.dgn

THE INFORMATION, INCLUDING ESTIMATED QUANTITIES OF WORK, SHOWN ON THESE SHEETS IS BASED ON LIMITED INVESTIGATIONS BY THE STATE AND IS IN NO WAY WARRANTED TO INDICATE THE CONDITIONS OF ACTUAL QUANTITIES OF WORK WHICH WILL BE REQUIRED.

Date Plotted: October 01, 2014

DESIGNER/DRAFTER: CSB
CHECKED BY: ALM
SCALE AS NOTED

STATE OF CONNECTICUT
DEPARTMENT OF TRANSPORTATION

ENGINEER: BAKER ENGINEERING
APPROVED BY:
DATE:

PROJECT TITLE: SHORE LINE EAST RAILROAD STATIONS

TOWN: CLINTON

DRAWING TITLE: MISCELLANEOUS DETAILS - II

PROJECT NO. 310-0059
DRAWING NO. C-501
SHEET NO. 03.18

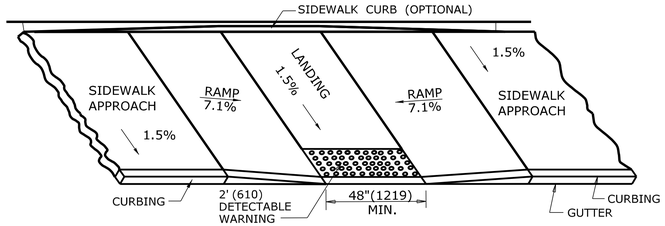

PARALLEL SIDEWALK RAMP (TYPE 1) NO UTILITY STRIP

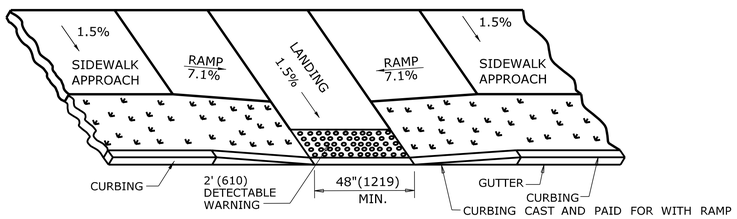

PARALLEL SIDEWALK RAMP (TYPE 1a)
WITH UTILITY / GRASS STRIP

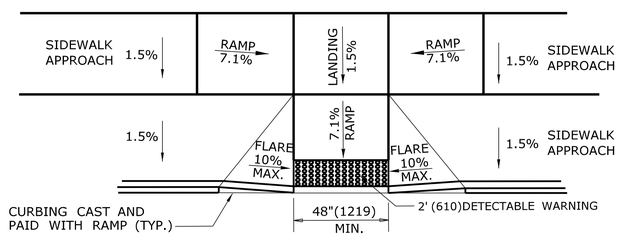

PARALLEL/PERPENDICULAR SIDEWALK RAMP
NO UTILITY/GRASS STRIP (TYPE 1b)

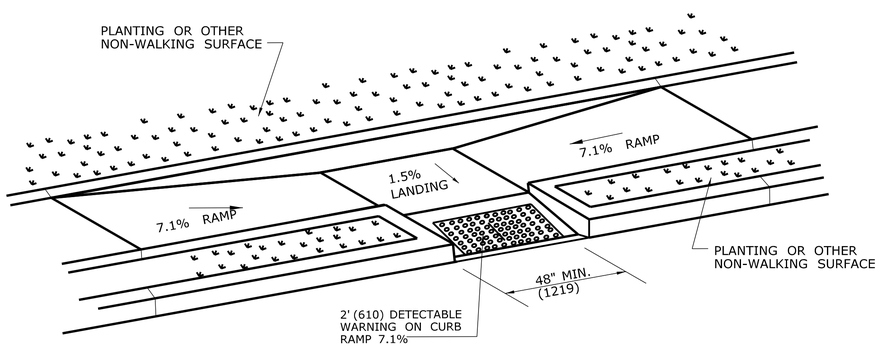

PARALLEL SIDEWALK RAMP (TYPE 1c)
WITH UTILITY / GRASS STRIP

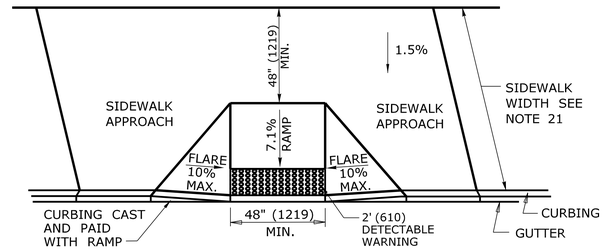

PERPENDICULAR SIDEWALK RAMP
W/ 48" (1219) MIN. BY PASS LANDING (TYPE 2)

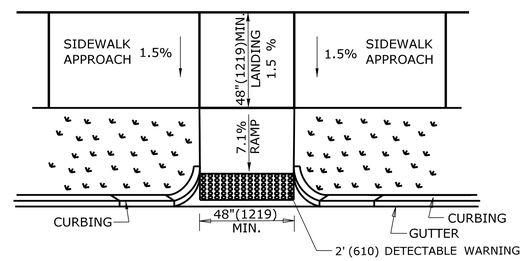

PERPENDICULAR SIDEWALK RAMP
W/CURB RETURNS / UTILITY GRASS STRIP (TYPE 2a)

* OPTIONAL FLARE ONE SIDE OF RAMP

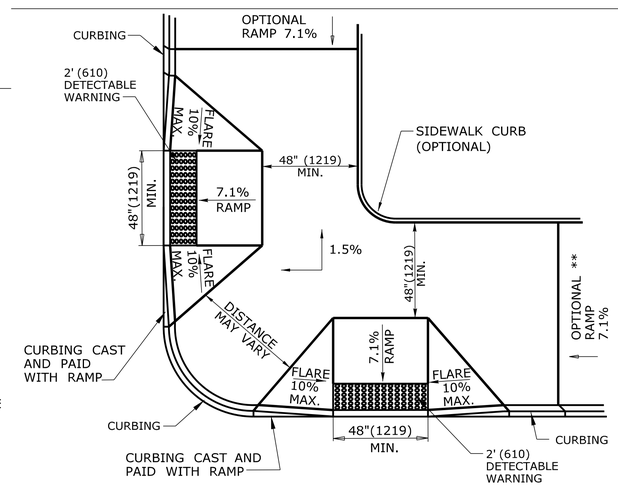

DUAL PERPENDICULAR
SIDEWALK RAMPS (TYPE 3)

SEE NOTES 19
* OPTIONAL CURB RETURN ON ONE SIDE OF RAMP
** SEE NOTE 23

GENERAL NOTES:

1. MAXIMUM SLOPES OF ADJOINING GUTTERS AND ROAD SURFACES IMMEDIATELY ADJACENT TO THE SIDEWALK RAMP 13%. SEE DETAIL 1 ON SHEET 4.
2. RAMP GRADE SHALL BE UNIFORM, FREE OF SAGS AND ABRUPT GRADE CHANGES. RUNNING SLOPES OF RAMPS SHALL NOT EXCEED 8.33% AND SHALL NOT EXCEED 15' (4.5m) WITHOUT PROVIDING A LANDING.
3. ALL RAMPS SHALL BE CONSTRUCTED OF CLASS "F" CONCRETE IN ACCORDANCE WITH CONNECTICUT STANDARD SPECIFICATIONS.

   ALL SIDEWALK RAMPS SHALL BE STABLE, FIRM AND SLIP RESISTANT. SURFACE DISCONTINUITIES SHALL NOT EXCEED ½" (13) MAX. VERTICAL DISCONTINUITIES BETWEEN ¼" (6.4) AND ½" (13) MAX. SHALL BE BEVELED 1:2 MINIMUM APPLIED ACROSS THE ENTIRE LEVEL CHANGE.
5. DIAGONAL SIDEWALK RAMPS AT MARKED CROSSINGS SHALL BE WHOLLY CONTAINED WITHIN THE MARKINGS, EXCLUDING ANY FLARED SIDES. DIAGONAL AND PERPENDICULAR RAMPS SHALL HAVE THE RAMP CUT PERPENDICULAR TO THE TANGENT OF THE CURB RADIUS FOR THE DESIGNATED ACCESSIBLE ROUTE. BOTH LONGITUDINAL SIDES OF THE RAMP SHOULD BE THE SAME LENGTH. SKEWED RAMPS SHOULD BE AVOIDED. FLARES ARE NOT CONSIDERED PART OF
6. REMOVAL OF EXISTING SIDEWALK FOR NEW RAMP INSTALLATIONS SHALL BE TO THE NEAREST EXPANSION OR CONTRACTION JOINT. 8.3% MAXIMUM SLOPE MAY NOT BE ACHIEVABLE DUE TO EXISTING SIDEWALK GRADE. IN RECOGNITION OF THIS, A LIMIT OF 15' (4572) FOR REMOVAL SHALL BE USED UNLESS OTHERWISE SHOWN ON THE PLANS OR DIRECTED BY THE ENGINEER. SAW CUT REQUIRED FOR DUMMY JOINTS SHALL BE INCLUDED IN THE COST OF "CONCRETE SIDEWALK RAMP" OR "CONCRETE SIDEWALK".

   BETWEEN EXPANSION JOINTS EXCEED 12' (3658) UNLESS OTHERWISE NOTED.
8. CONCRETE SIDEWALK RAMPS, SHALL BE PAID FOR UNDER THE ITEM "CONCRETE SIDEWALK RAMP", AS DEFINED BY THE CONSTRUCTION LIMITS ON THE PLANS AND SHALL BE FIELD VERIFIED.

   OTHERWISE BY THE ENGINEER (SEE TYPICAL SECTION ON SHEET 3). CURB REMOVAL AND CAST IN PLACE CURBING REQUIRED FOR THE RAMP, SHALL BE INCLUDED WITH PAY ITEM "CONCRETE SIDEWALK RAMP". CURBING OUTSIDE LIMITS OF RAMP OR LANDING SHOWN ON SHEET 3 SHALL BE CONSTRUCTED AND PAID FOR IN ACCORDANCE WITH CONNECTICUT STANDARD SPECIFICATIONS.
10. PREFERRED LOCATION TO INSTALL DETECTABLE WARNING STRIP SHALL BE 6" (152) FROM THE EDGE OF ROAD ALONG THE FULL WIDTH OF THE RAMP. FOR ALTERNATE LOCATIONS, REFER TO DETECTABLE WARNING PLACEMENT DETAILS ON SHEET 4.
11. TO PERMIT WHEELCHAIR WHEELS TO ROLL BETWEEN DOMES, ALIGN DOMES ON A SQUARE GRID IN THE DIRECTION OF RUNNING SLOPE (PERPENDICULAR TO CURB OR SLOPE BREAK). THE TRANSITION FROM RAMP TO GUTTER SHALL BE FLUSH WITHOUT A LIP.
12. WHERE COMMERCIAL DRIVEWAYS ARE PROVIDED WITH TRAFFIC SIGNALS AND THE SIDEWALK IS CONTINUOUS THROUGH DRIVEWAY, DETECTABLE WARNINGS ARE REQUIRED AT THE JUNCTION BETWEEN THE PEDESTRIAN ROUTE AND DRIVEWAY.
13. CONSTRUCT A SIDEWALK CURB WHEN THERE IS INSUFFICIENT BUFFER AVAILABLE TO GRADE OR WHEN CALLED FOR IN PLANS. PAID FOR WITH SIDEWALK RAMP WHEN REQUIRED FOR RAMP.
14. THE TOP AND BOTTOM OF RAMPS SHOULD BE PROVIDED WITH A 4' x 4' (1219 x 1219) MINIMUM LEVEL LANDING AREA WITH A CROSS SLOPE LESS THAN OR EQUAL TO 2% IN ANY DIRECTION.
15. UTILITY POLES, LUMINAIRE, PEDESTRIAN OR SIGNAL POLES, GRATES, ACCESS COVERS, AND OTHER APPURTENANCES SHALL NOT BE LOCATED ON RAMPS, LANDINGS, BLENDED TRANSITIONS, AND @ GUTTERS WITHIN THE PEDESTRIAN ACCESS ROUTE.
16. APPROACH SIDEWALK WIDTHS, GRASS STRIP OR UTILITY STRIP WIDTHS MAY VARY.
17. APPROACH SIDEWALK AND LANDING CROSS SLOPE SHALL NOT EXCEED 2%.
18. THE RUNNING OR CROSS SLOPES ON LANDINGS AT MID BLOCK CROSSING MAY BE WARPED TO MEET STREET OR HIGHWAY GRADE.
19. FOR PERPENDICULAR CURB RAMPS A MIN. 4'(1.2m) x 4'(1.2m) LEVEL LANDING SHALL BE PROVIDED AT THE TOP OF CURB RAMP. WHERE THE LEVEL LANDING IS RESTRICTED AT THE BACK OF SIDEWALK THE LEVEL LANDING SHALL BE 4'(1.2m) x 5'(1.5m) WITH THE 5'(1.5m) DIMENSION PROVIDED IN THE DIRECTION OF THE RAMP RUN.
20. FOR PARALLEL CURB RAMPS, A MIN. 4'(1.2m) x 4'(1.2m) LEVEL LANDING SHALL BE PROVIDED AT THE BOTTOM OF CURB RAMP. IF THE LEVEL LANDING IS RESTRICTED ON 2 OR MORE SIDES, THE LEVEL LANDING SHALL BE 4'(1.2m)x 5'(1.5m) WITH THE 5' (1.5m) DIMENSION PROVIDED IN THE DIRECTION OF THE PEDESTRIAN STREET CROSSING.
21. WHEN WIDTH OF SIDEWALK IS ≥48" AND A PERPENDICULAR SIDEWALK RAMP IS INSTALLED, THE FLARED SIDES SHALL BE 10% MAX. IF WIDTH OF SIDEWALK IS <48" THE FLARED SIDES MUST NOT EXCEED 8.33% (12:1).

23. OPTIONAL RAMP, WHEN REQUIRED, SHALL BE PAID FOR AS PART OF CONCRETE SIDEWALK RAMP.

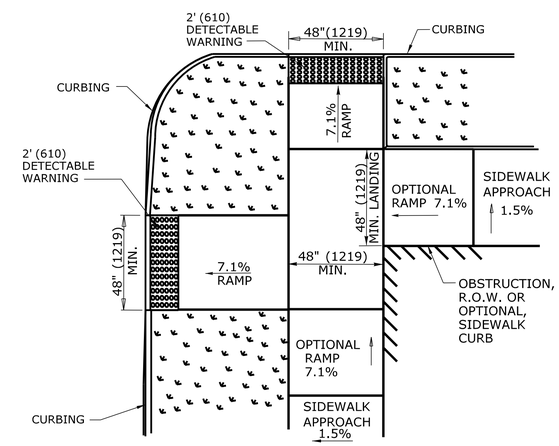

DUAL PERPENDICULAR SIDEWALK RAMPS (TYPE 3a)
WITH UTILITY / GRASS STRIP

SEE NOTE 20

ALL METRIC DIMENSIONS ARE IN MILLIMETERS (mm) UNLESS OTHERWISE NOTED.

REV.	DATE	REVISION DESCRIPTION	SHEET NO.
-	-	-	-

Filename: FD_MSH_DET_0027_0059_C-500.dgn

THE INFORMATION, INCLUDING ESTIMATED QUANTITIES OF WORK, SHOWN ON THESE SHEETS IS BASED ON LIMITED INVESTIGATIONS BY THE STATE AND IS IN NO WAY WARRANTED TO INDICATE THE CONDITIONS OF ACTUAL QUANTITIES OF WORK WHICH WILL BE REQUIRED.

Date Plotted: October 01, 2014

DESIGNER/DRAFTER: CSB
CHECKED BY: ALM
SCALE AS NOTED

STATE OF CONNECTICUT
DEPARTMENT OF TRANSPORTATION

ENGINEER: BAKER ENGINEERING
APPROVED BY:
DATE:

PROJECT TITLE:
SHORE LINE EAST RAILROAD STATIONS

TOWN: CLINTON

DRAWING TITLE: SIDEWALK RAMPS SHEET 1

PROJECT NO. 310-0059
DRAWING NO. C-502
SHEET NO. 03.19

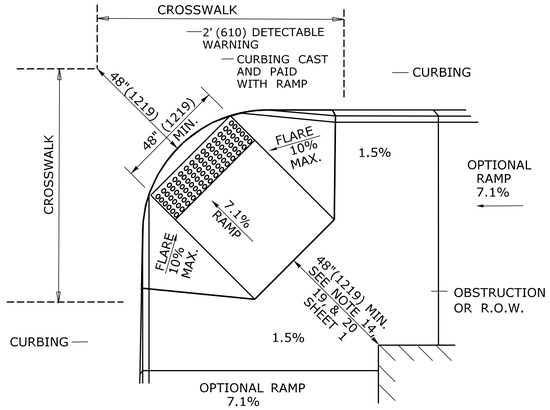

DIAGONAL SIDEWALK RAMP (TYPE 4)
W/LANDING AT TOP

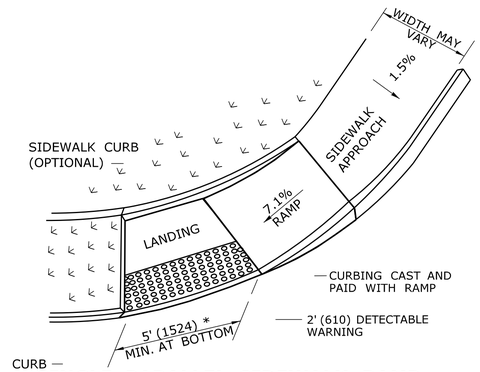

SINGLE PARALLEL SIDEWALK RAMP
W/LANDING AT BOTTOM ON
CORNER (TYPE 4c)
* SEE NOTE 20 SHEET 1

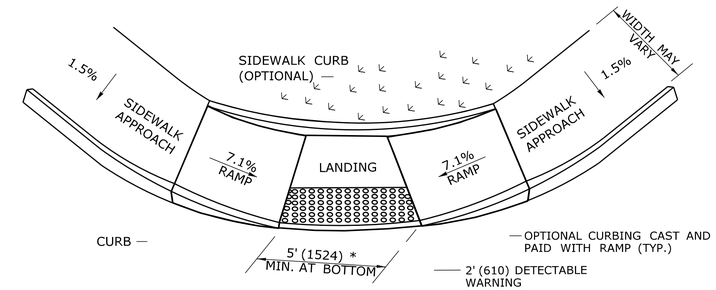

DOUBLE PARALLEL SIDEWALK RAMP
W/LANDING AT BOTTOM ON CORNER (TYPE 4f)
* SEE NOTE 20 SHEET 1

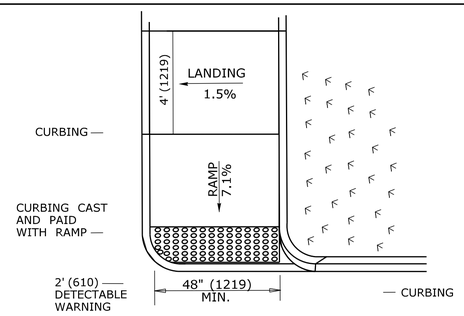

SINGLE DIRECTION
PERPENDICULAR SIDEWALK RAMP
NO / UTILITY GRASS STRIP
(TYPE 4a)

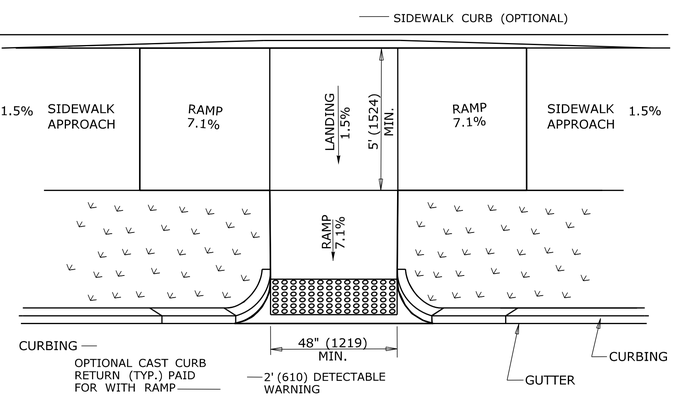

PARALLEL/PERPENDICULAR SIDEWALK RAMP
COMBINATION W/ CURB RETURNS (TYPE 4d)
* OPTIONAL FLARE ONE SIDE

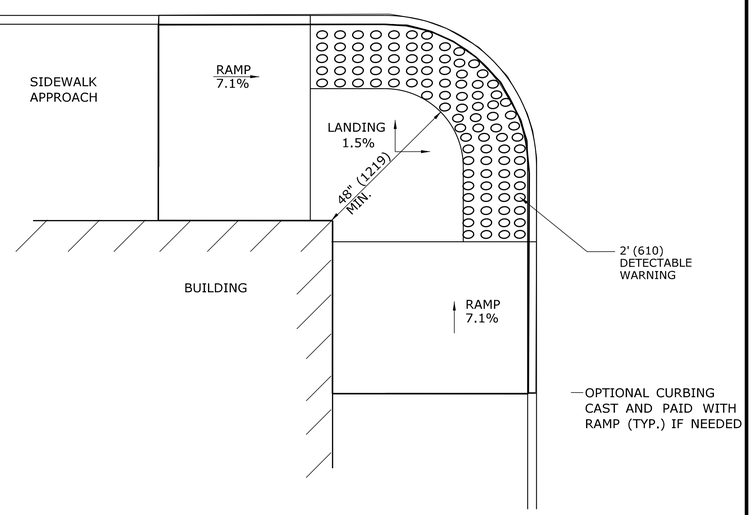

RESTRICTED CONDITION
DIAGONAL SIDEWALK RAMP
(TYPE 4g)

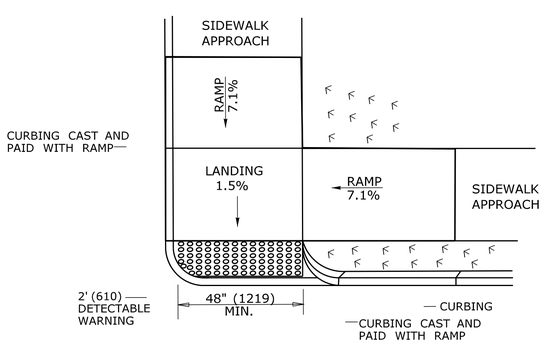

DOUBLE DIRECTION
PARALLEL SIDEWALK RAMP
NO / UTILITY GRASS STRIP
(TYPE 4b)
SEE NOTE 20 SHEET 1

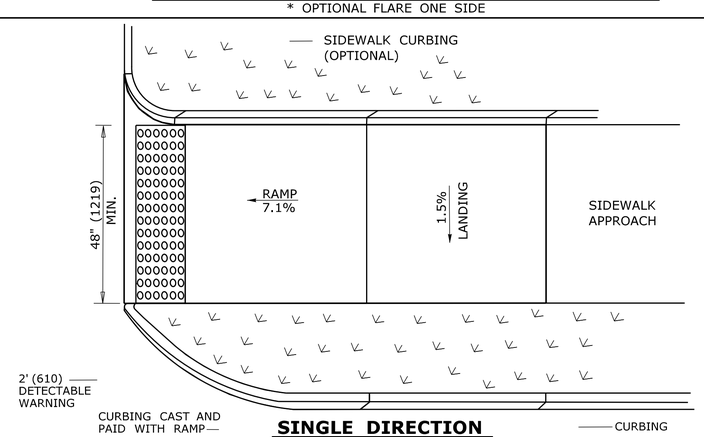

SINGLE DIRECTION
PERPENDICULAR SIDEWALK RAMP
W/ UTILITY GRASS STRIP (TYPE 4e)
REFER TO DETECTABLE WARNING PLACEMENT ON SHEET 4

ALL METRIC DIMENSIONS ARE IN MILLIMETERS (mm) UNLESS OTHERWISE NOTED

REV.	DATE	REVISION DESCRIPTION	SHEET NO.

Filename: FD..MSH..DET..0154..0062..C-503.dgn

THE INFORMATION, INCLUDING ESTIMATED QUANTITIES OF WORK, SHOWN ON THESE SHEETS IS BASED ON LIMITED INVESTIGATIONS BY THE STATE AND IS IN NO WAY WARRANTED TO INDICATE THE CONDITIONS OF ACTUAL QUANTITIES OF WORK WHICH WILL BE REQUIRED.

Date Plotted: October 01, 2014

DESIGNER/DRAFTER: CSB
CHECKED BY: ALM
SCALE AS NOTED

STATE OF CONNECTICUT
DEPARTMENT OF TRANSPORTATION

ENGINEER: BAKER ENGINEERING
APPROVED BY:
DATE:

PROJECT TITLE: SHORE LINE EAST RAILROAD STATIONS

TOWN: CLINTON

DRAWING TITLE: SIDEWALK RAMPS SHEET 2

PROJECT NO. 310-0059
DRAWING NO. C-503
SHEET NO. 03.20

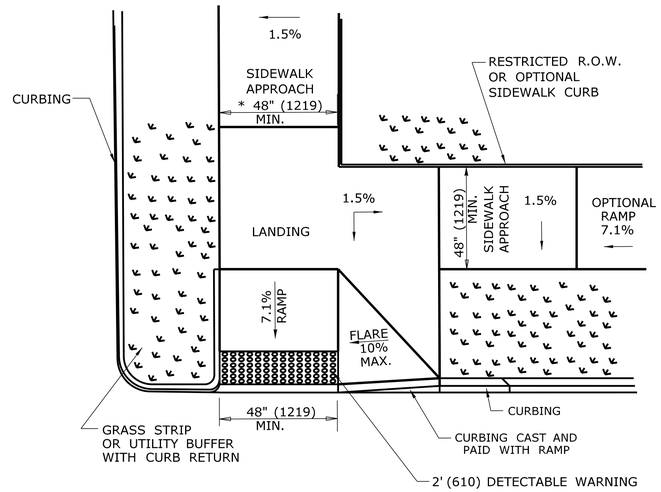

RESTRICTED CORNER PERPENDICULAR SIDEWALK RAMP (TYPE 5)

* SEE NOTE 19 SHEET 1

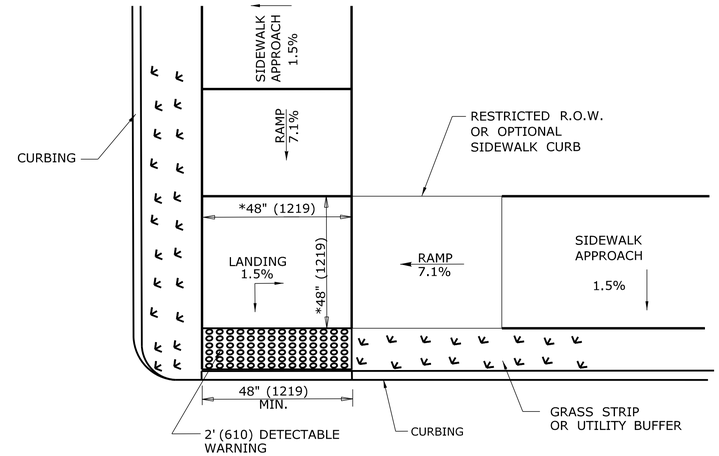

RESTRICTED CORNER PARALLEL DOUBLE SIDEWALK RAMPS W/CENTER LANDING AND UTILITY GRASS STRIP (TYPE 5a)

* SEE NOTE 20 SHEET 1

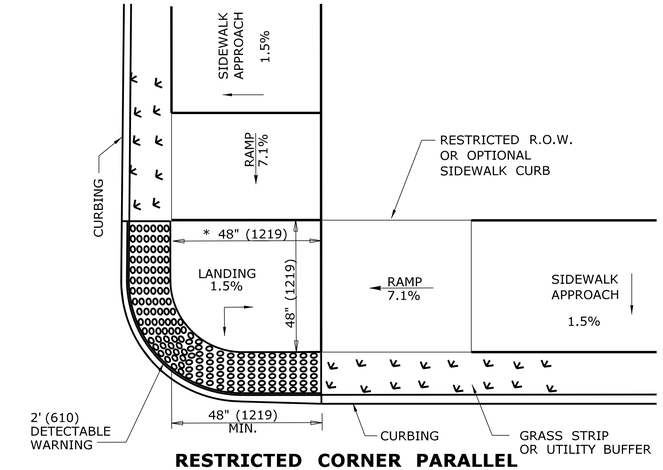

RESTRICTED CORNER PARALLEL SIDEWALK RAMPS W/ CENTER LANDING TWO DIRECTION AND UTILITY GRASS STRIP (TYPE 5b)

* SEE NOTE 20 SHEET 1

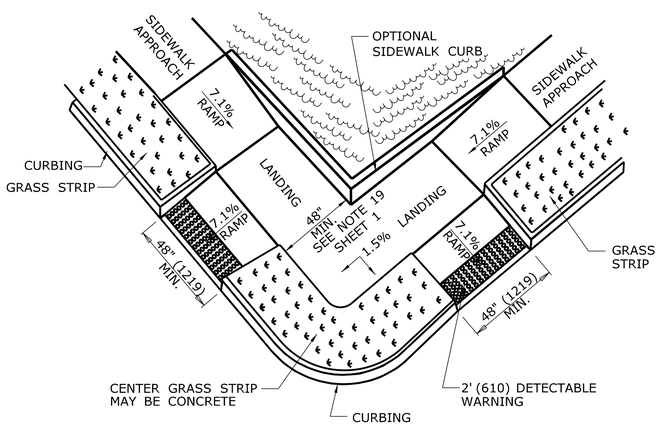

COMBINATION SIDEWALK RAMP (TYPE 6)

* SEE NOTE 19 SHEET 1

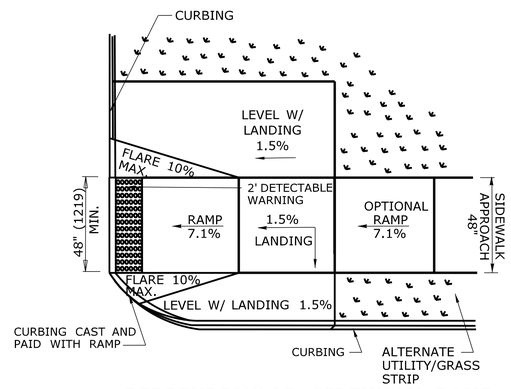

PERPENDICULAR SIDEWALK RAMP ONE DIRECTION ON CORNER (TYPE 6a)

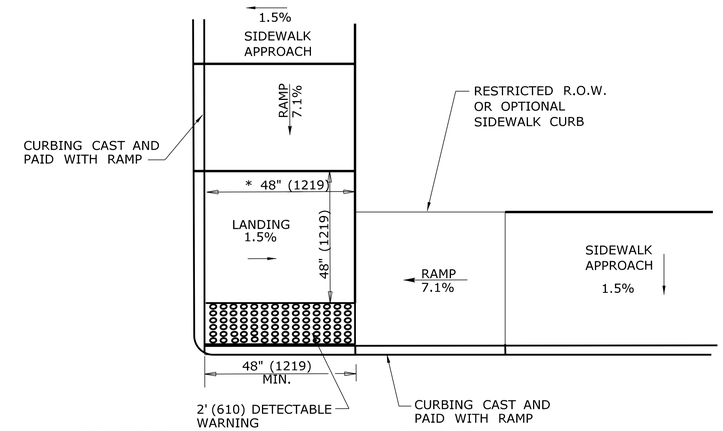

RESTRICTED CORNER PARALLEL SIDEWALK RAMPS W/CENTER LANDING NO GRASS STRIP (TYPE 5c)

* SEE NOTE 20 SHEET 1

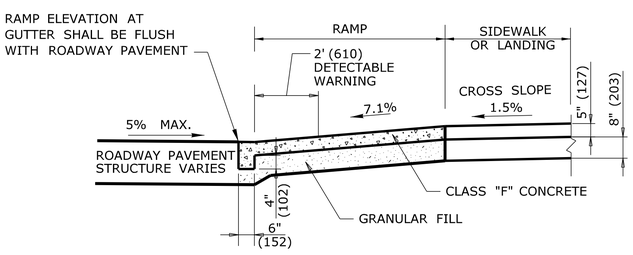

TYPICAL SECTION THRU SIDEWALK RAMP

SEE NOTE 2 AND 17 SHEET 1

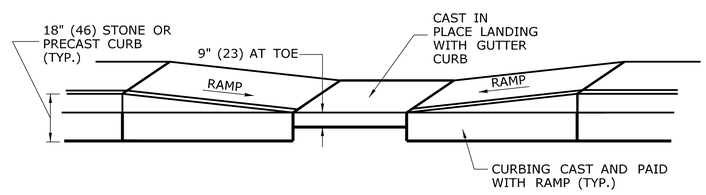

TYPICAL ELEVATION PARALLEL SIDEWALK RAMP WITH CAST IN PLACE GUTTER

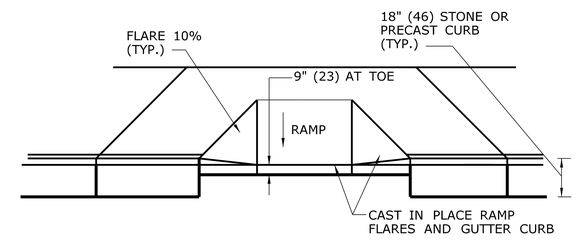

TYPICAL ELEVATION PERPENDICULAR SIDEWALK RAMP WITH CAST IN PLACE GUTTER

ALL METRIC DIMENSIONS ARE IN MILLIMETERS (mm) UNLESS OTHERWISE NOTED

REV.	DATE	REVISION DESCRIPTION	SHEET NO.
-	-	-	-

Filename: FD_MSH_DET_0027_0059_C-500.dgn

THE INFORMATION, INCLUDING ESTIMATED QUANTITIES OF WORK, SHOWN ON THESE SHEETS IS BASED ON LIMITED INVESTIGATIONS BY THE STATE AND IS IN NO WAY WARRANTED TO INDICATE THE CONDITIONS OF ACTUAL QUANTITIES OF WORK WHICH WILL BE REQUIRED.

Date Plotted: October 01, 2014

DESIGNER/DRAFTER: CSB
CHECKED BY: ALM
SCALE AS NOTED

STATE OF CONNECTICUT
DEPARTMENT OF TRANSPORTATION

ENGINEER: BAKER ENGINEERING
APPROVED BY:
DATE:

PROJECT TITLE: SHORE LINE EAST RAILROAD STATIONS

TOWN: CLINTON

DRAWING TITLE: SIDEWALK RAMP SHEET 3

PROJECT NO. 310-0059
DRAWING NO. C-504
SHEET NO. 03.21

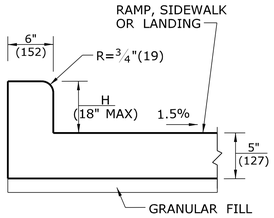

MONOLITHIC CAST CURB

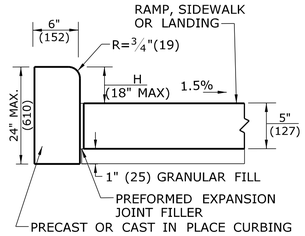

SEPARATELY CAST CURB

SIDEWALK CURB OPTIONS AT BACK OF SIDEWALK

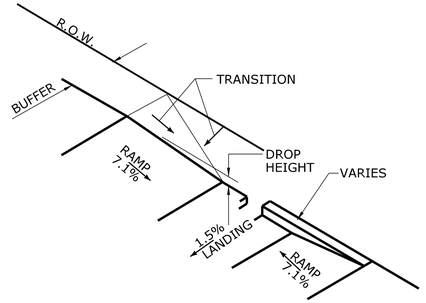

BACK OF SIDEWALK CURB OR BUFFER TRANSITION

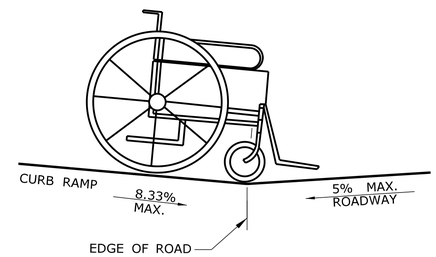

DETAIL 1

SEE GRADE CHANGE AT ROADWAY INTERFACE

SEE NOTE 1 SHEET HW-921_02a

GENERAL NOTES:

1. RAMPED MEDIANS SHALL HAVE A CURB RAMP AT EITHER END AND LEVEL LANDING A MINIMUM OF 5' x 5' (1.5m x 1.5m) IN BETWEEN. CUT-THROUGH MEDIANS SHALL BE A MINIMUM OF 6' (1.8m) LONG AND 5' (1.5m) WIDE. FOR ALL MEDIANS, CUT-THROUGH OR RAMPED, A 2' (610) STRIP OF DETECTABLE WARNINGS SHALL BE INSTALLED AT THE ENTRANCE AND EXIT.
2. SEE GENERAL NOTES ON SHEET 1.

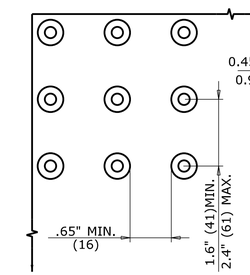

DOME SPACING

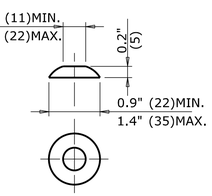

DOME SECTION

STANDARD DOME ON DETECTABLE WARNING TILES

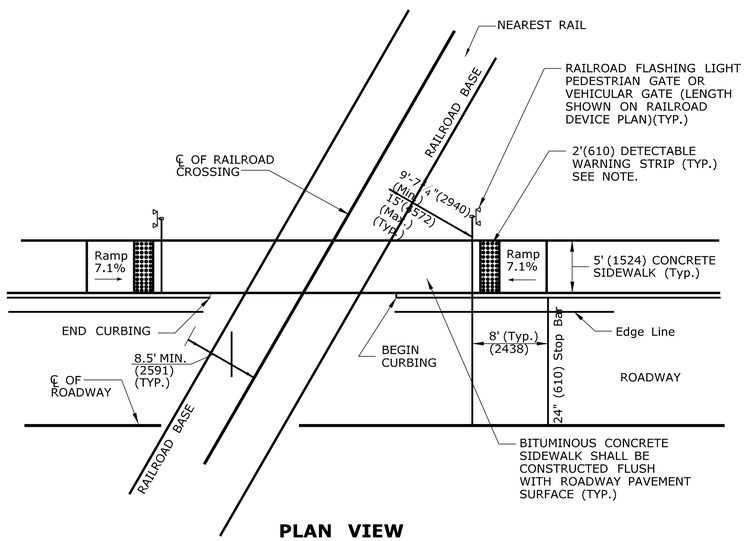

PLAN VIEW

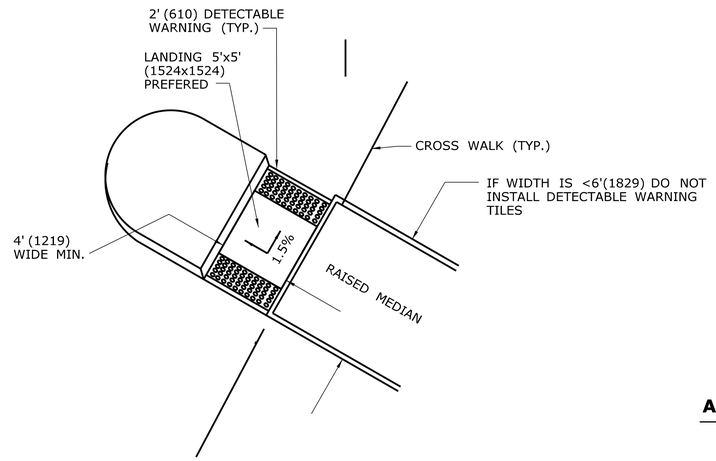

CUT-THROUGH MEDIAN ISLAND

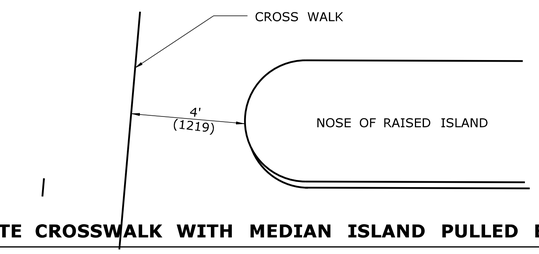

ALTERNATE CROSSWALK WITH MEDIAN ISLAND PULLED BACK

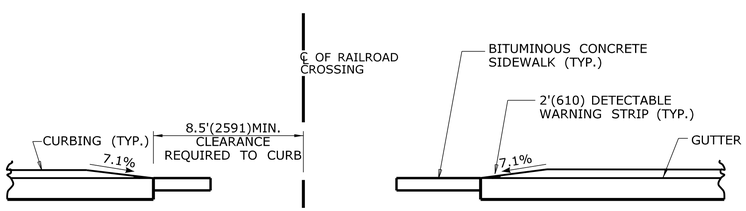

ELEVATION VIEW

DETECTABLE WARNINGS AT RAILROAD CROSSING

NOTE: WHEN NO GATE IS PRESENT, INSTALL DETECTABLE WARNING SURFACE 12' (3.6m) FROM THE NEAREST RAIL. IF GATE IS PRESENT, INSTALL DETECTABLE WARNING 2' (610) PRIOR TO GATE. THE ROWS OF TRUNCATED DOMES IN A DETECTABLE WARNING SURFACE SHALL BE INSTALLED PARALLEL WITH THE DIRECTION OF PEDESTRIAN TRAVEL.

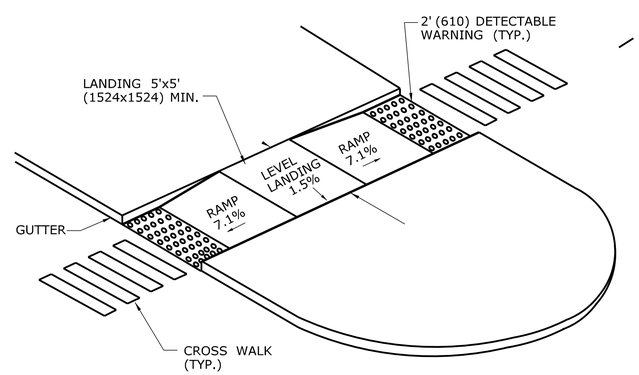

RAISED MEDIAN ISLAND WITH LANDING AND RAMPS

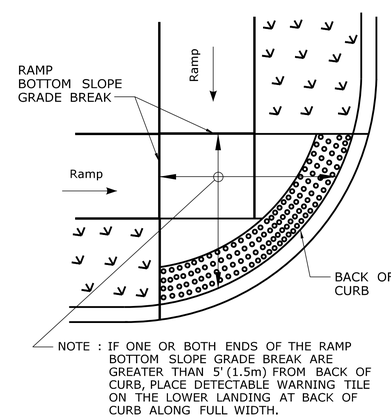

DETECTABLE WARNING PLACEMENT DETAIL 1

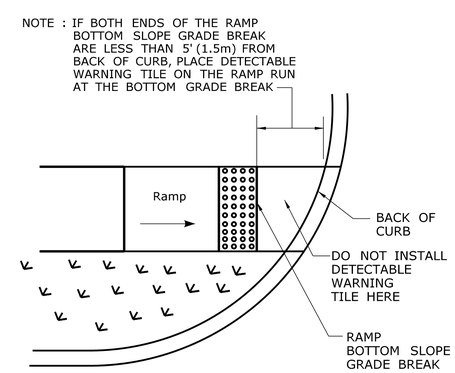

DETECTABLE WARNING PLACEMENT DETAIL 2

REV.	DATE	REVISION DESCRIPTION	SHEET NO.
-	-	-	-

Filename: FD_MSH_DET_0027_0059_C-500.dgn

THE INFORMATION, INCLUDING ESTIMATED QUANTITIES OF WORK, SHOWN ON THESE SHEETS IS BASED ON LIMITED INVESTIGATIONS BY THE STATE AND IS IN NO WAY WARRANTED TO INDICATE THE CONDITIONS OF ACTUAL QUANTITIES OF WORK WHICH WILL BE REQUIRED.

Date Plotted: October 01, 2014

DESIGNER/DRAFTER: CSB
CHECKED BY: ALM
SCALE AS NOTED

STATE OF CONNECTICUT
DEPARTMENT OF TRANSPORTATION

ENGINEER: BAKER ENGINEERING
APPROVED BY:
DATE:

PROJECT TITLE:
SHORE LINE EAST RAILROAD STATIONS

TOWN: **CLINTON**

DRAWING TITLE: **SIDEWALK RAMP SHEET 4**

PROJECT NO. **310-0059**
DRAWING NO. **C-505**
SHEET NO. **03.22**

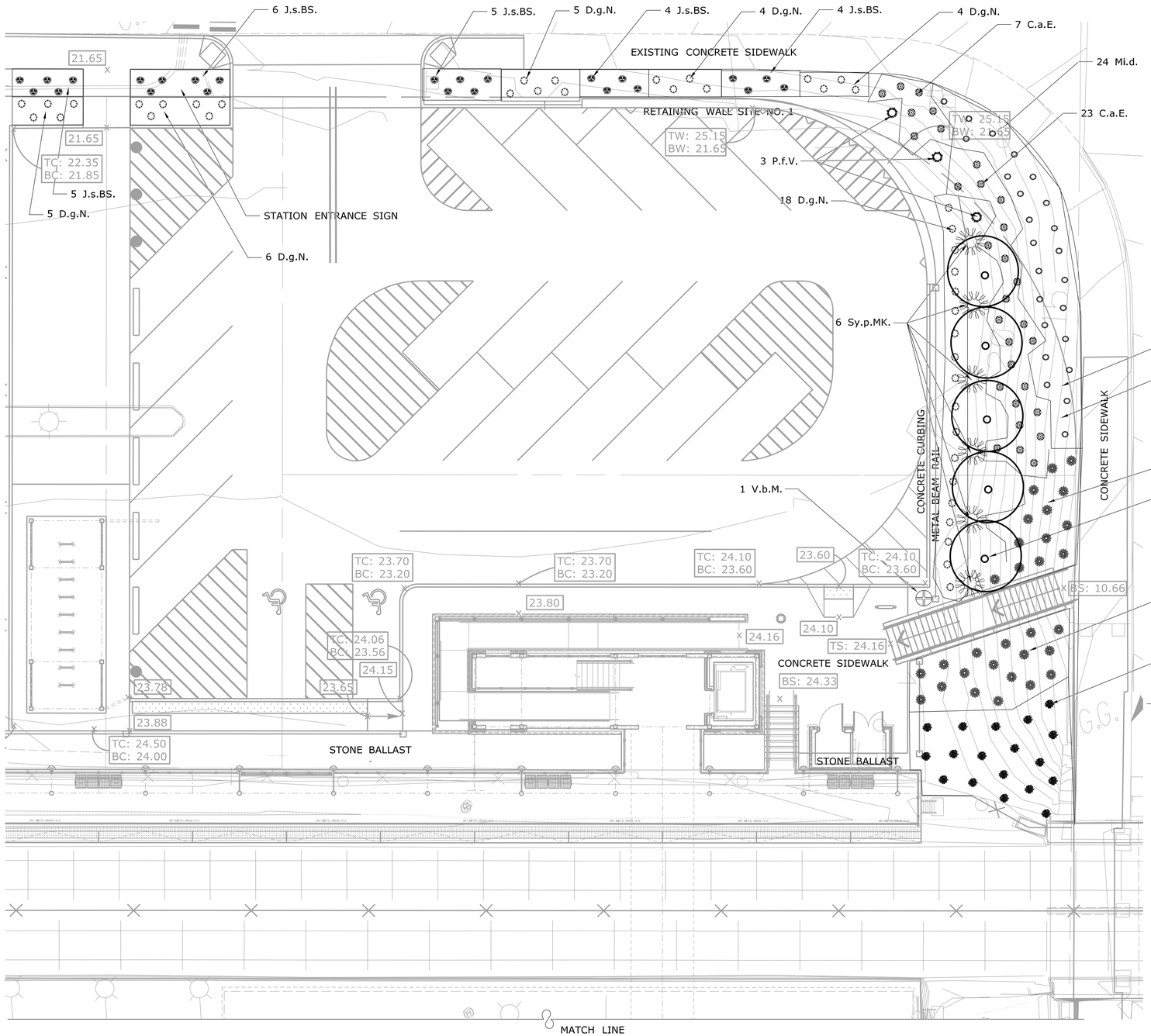

PLANT LIST

QTY	SYMBOL	BOTANICAL NAME	COMMON NAME	SIZE/FORM	SPACING
5	Am.g.AB.	Amelanchier x grandiflora 'Autumn Brilliance'	Autumn Brilliance Shadblow	8'-10' Ht. B.B., Clump	12' On Center
30	C.a.E.	Cornus alba 'Elegentissima'	Red Variegated Twig Dogwood	6 Gal. cont.	4' On Center
42	D.g.N.	Deutzia gracilis'Nikko'	Spreading Deutzia	2 Gal. cont.	4' On Center
24	J.s.BS.	Juniperus squamata 'Blue Star'	Single Seed Juniper	3 Gal. cont.	4' On Center
24	Mi.d.	Microbiota decussata	Russian Cypress	3 Gal. cont.	4' On Center
18	P.j.DW	Pieris japonica 'Dorothy Wycoff'	Andromeda	6 Gal. cont.	5' On Center
3	P.f.V.	Pinus flexilis 'Vanderwolf'	Pine,Vanderwolf's Pyramid	7'-8' Ht. B.B.	10' On Center
30	Rho.pjm.C.	Rhododendron P.J.M. 'Compacta'	Compact PJM Rhododendron	6 Gal. cont.	4' On Center
6	Sy.p.MK.	Syringa patula 'Ms.Kim'	Ms. Kim Lilac	30"-36" Ht. B.B.	11' On Center
1	V.b.M.	Viburnumx burkwoodii 'Mohawk'	Burkwood Viburnum Hybrid	3'-4' Ht. B.B.	As Shown

FURNISHING AND PLACING TOPSOIL (AT 6" DEEP)

WOOD CHIP MULCH (AT 4" DEEP)

13 Rho.pjm.C.

5 Am.g.AB.

17 Rho.pjm.C.

18 P.j.DW.

NOTES:

THE CONTRACTOR SHALL REFER TO ITEM #0949003A - FURNISHING, PLANTING AND MULCHING TREES, SHRUBS, VINES AND GROUND COVER PLANTS, AND THE LATEST SUPPLEMENTAL REQUIREMENTS OF SECTION 9.49 OF THE FORM 816 FOR INFORMATION ON FURNISHING, PLANTING, MAINTENANCE OF PLANTS, AND THE REPLACEMENT OF UNSATISFACTORY PLANTS OR MATERIALS.

THIS PLAN IS INTENDED FOR LANDSCAPING PURPOSES ONLY. REFER TO SITE/CIVIL DRAWINGS FOR ALL OTHER SITE CONSTRUCTION INFORMATION.

SEE STANDARD SHEETS FOR TYPICAL PLANTING DETAILS.

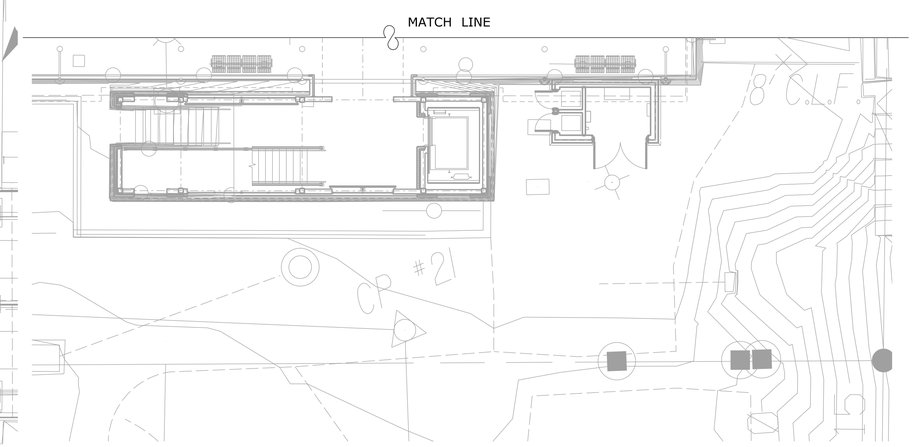

LANDSCAPE PLAN - NORTH
SCALE: 1" = 10'-0"

LANDSCAPE PLAN - SOUTH
SCALE: 1" = 10'-0"

REV.	DATE	REVISION DESCRIPTION	SHEET NO.
-	-	-	-

THE INFORMATION, INCLUDING ESTIMATED QUANTITIES OF WORK, SHOWN ON THESE SHEETS IS BASED ON LIMITED INVESTIGATIONS BY THE STATE AND IS IN NO WAY WARRANTED TO INDICATE THE CONDITIONS OF ACTUAL QUANTITIES OF WORK WHICH WILL BE REQUIRED.

DESIGNER/DRAFTER: -
CHECKED BY: -
SCALE IN FEET 0 20 40
SCALE 1"=20'

STATE OF CONNECTICUT
DEPARTMENT OF TRANSPORTATION

ENGINEER: BAKER ENGINEERING
APPROVED BY:
DATE:

PROJECT TITLE:
SHORE LINE EAST RAILROAD STATIONS

TOWN: **CLINTON**
DRAWING TITLE: **LANDSCAPE PLAN**

PROJECT NO. **310-0059**
DRAWING NO. **C-700**
SHEET NO. **03.23**

Filename: PDOT_SH_LDS_0027_0059_C-700.dgn
Date Plotted: October 01, 2014

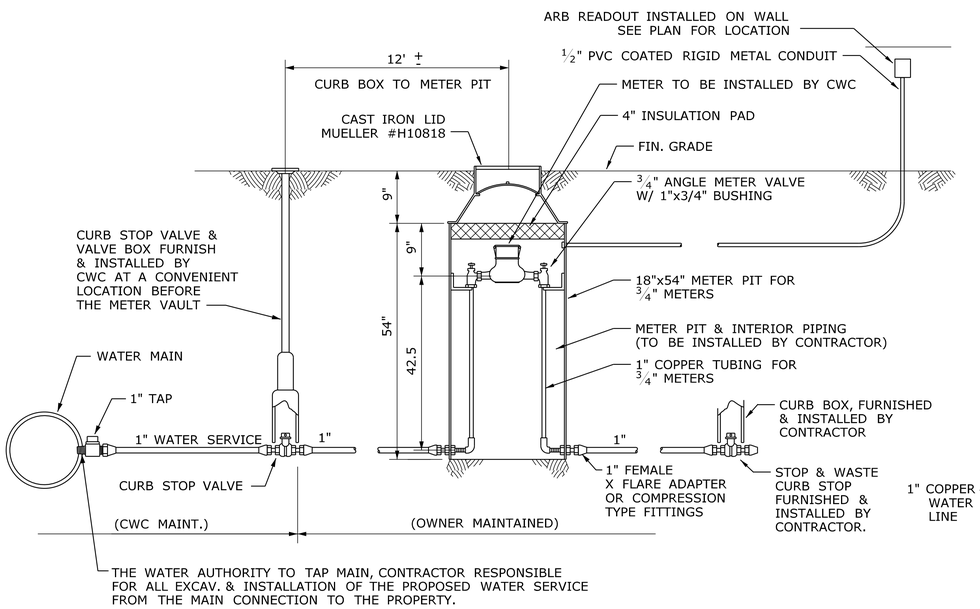

METER VAULT DETAIL — N.T.S. — 1 / M-100

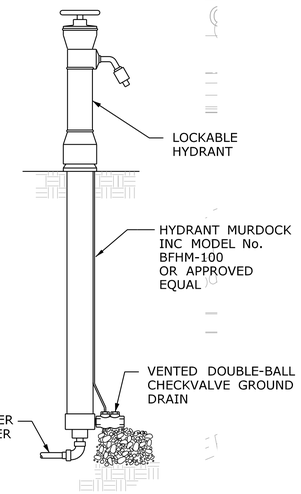

HYDRANT DETAIL — N.T.S. — 2 / M-100

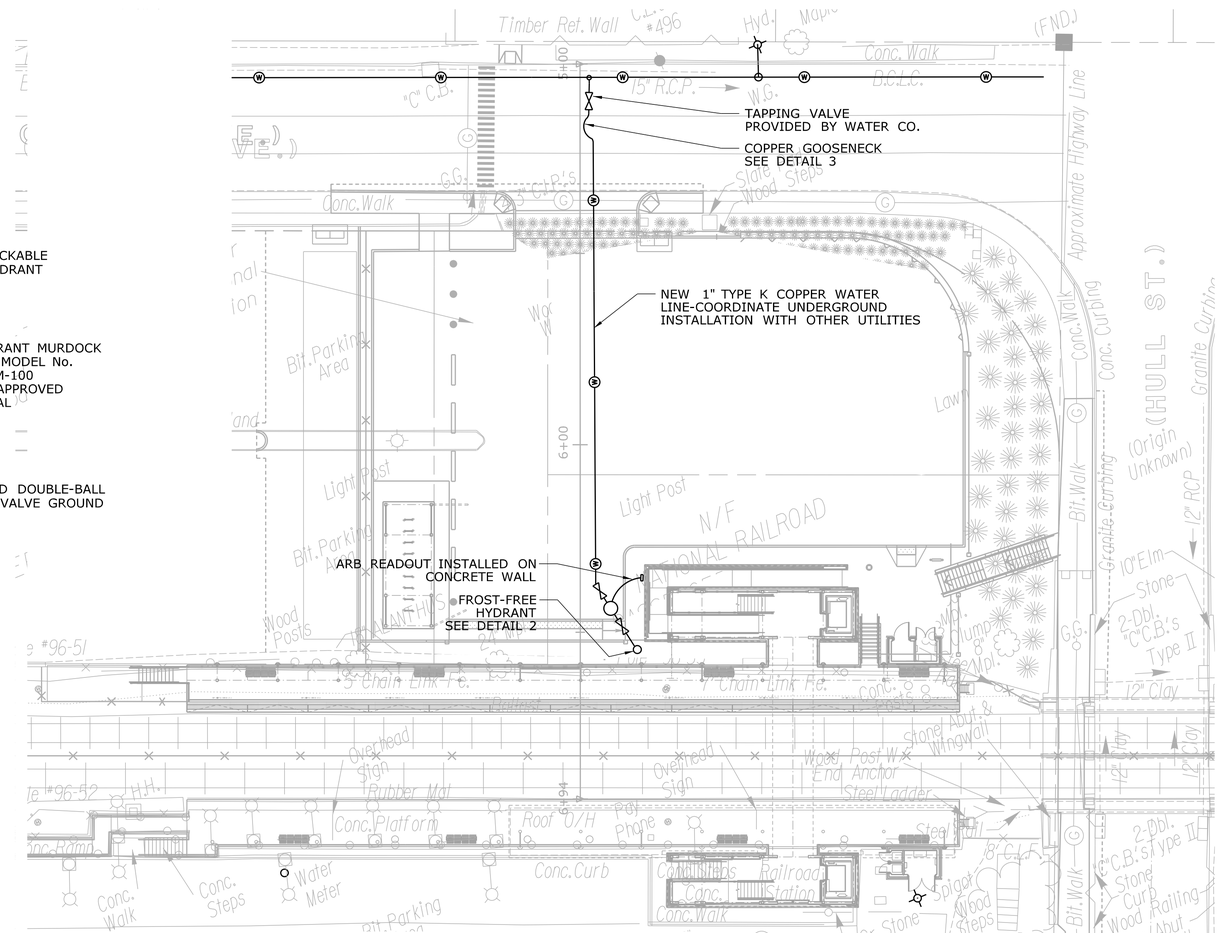

WATER SERVICE PLAN
SCALE: 1" = 20'-0"

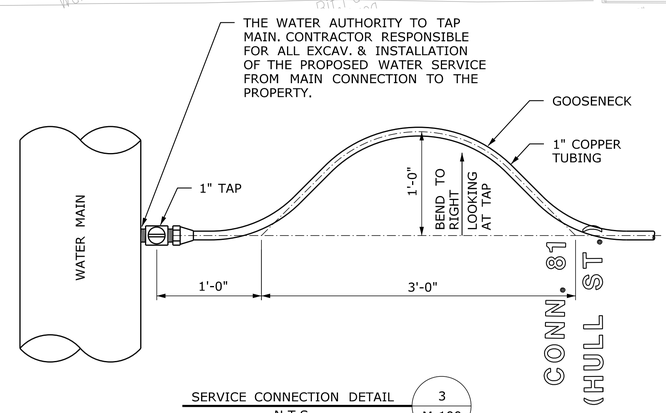

SERVICE CONNECTION DETAIL — N.T.S. — 3 / M-100

NOTES

ALL WORK PERFORMED FOR THE CAPPING OF THE EXISTING WATER MAIN AND THE INSTALLATION OF THE NEW WATER LINE AND RELATED COMPONENTS TO BE PAID UNDER ITEM #0063510A, RAIL FACILITY UPGRADE. REGIONAL WATER AUTHORITY FEES TO BE PAID UNDER SECTION 1700001A, SERVICE CONNECTIONS (ESTIMATED COST)

COORDINATE ALL WORK WITH THE REGIONAL WATER AUTHORITY. SEE SECTION 1700001A, SERVICE CONNECTIONS (ESTIMATED COST) FOR CONTACT INFORMATION.

PIPE: COPPER ASTM B88-61 (OR LATEST) SEAMLESS TYPE K NO SOLDER JOINTS UNDERGROUND, ONLY COMPRESSION FITTINGS OR FLARED & THREADED FITTINGS. MINIMUM SIZE SERVICE 1" (ONE INCH).

VALVES 2" AND LESS: ONLY COCK TYPE VALVE, NO DRAIN, AT CURB. SERVICE VALVES (AT METER) MUST BE "BALL VALVE, GROUND KEY" TYPE, WITH LOCKING PROVISION AND MATCHING METER SADDLE. (APPROVED BY CONNECTICUT WATER AUTHORITY). GATE VALVES ARE NOT PERMITTED.

CURB BOXES: CAST IRON CURB BOXES BY ERIE WILL BE FURNISHED BY CWC AND INSTALLED BY THE CONTRACTOR (FLUSH WILL FINISHED GRADE) THE COVER WILL BE MARKED "WATER". VALVES: 1" & 1¼". CURB BOX DIAMETER: 3".

MINIMUM DEPTH OF ALL SERVICES MUST BE 5'-0" DEEP - NO EXCEPTIONS.

SERVICE PIPE TO BE INSTALLED IN TRENCH FROM THE MAIN ALL THE WAY TO THE BUILDING AND LEFT UNCOVERED SO AN AUTHORITY REPRESENTATIVE CAN INSPECT TO VERIFY THAT THE INSTALLATION CONFORMS TO THE RULES & REGULATIONS. INSPECTION MUST BE MADE AT TIME OF INSTALLATION OR PRIOR TO TAP INSTALLATION. TAPS WILL NOT BE INSTALLED WITHOUT AN INSPECTION.

NO OTHER FACILITY IN SAME TRENCH.

CROSSING OF OTHER FACILITIES MUST HAVE A MINIMUM OF 12" CLEARANCE.

NO WATER PIPE SHALL CROSS ANY PORTION OF SEEPAGE SYSTEM.

WATER PIPES AND SEWER PIPES MUST BE LAID IN SEPARATE TRENCHES AT LEAST 10' APART.

SERVICES MUST BE INSTALLED PERPENDICULAR TO THE WATER MAIN FROM THE TAP TO THE CURB VALVE AND IN A STRAIGHT LINE FROM THE CURB VALVE TO THE POINT OF ENTRANCE INTO THE BUILDING, EXCEPT IN UNUSUAL CIRCUMSTANCES WITH PRIOR APPROVAL FROM THE AUTHORITY.

CORPORATION COCKS (TAPS) MUST BE INSTALLED ON SIDE OF MAIN IN HORIZONTAL POSITION AT 9 O'CLOCK OR 3 O'CLOCK.

CURB BOXES SET IN PRIVATE RIGHT-OF WAYS MUST BE INSTALLED WITHIN THE BOUNDARIES OF THE RIGHT-OF-WAY.

THE PLUMBER MUST BE ON THE JOB SITE IN ORDER FOR THE TAP TO BE INSTALLED.

PLASTIC BLUE WARNING TAPE MUST BE LAID A MINIMUM OF 18" BUT NOT MORE THAN 24" ABOVE THE LINE OF SERVICE FROM THE MAIN TO THE BUILDING. WARNING TAPE SHALL HAVE A MINIMUM DIAMETER OF 4". THE METER VAULT OR METER YOKE MUST BE INSTALLED ON THE SERVICE PIPE BEFORE THE TAP WILL BE INSTALLED. IF YOU ARE REQUIRED TO REMOVE AN ABANDONED SERVICE FROM THE UTILITIES' WATER MAIN, IT MUST BE COMPLETED PRIOR TO INSTALLATION OF THE NEW TAP.

ALL WATER MAINS INSTALLED AFTER JANUARY 1991 ARE WRAPPED WITH A BLUE, PROTECTIVE POLYETHYLENE WRAP. PLEASE AVOID DAMAGING OR REMOVING THIS PROTECTIVE WRAPPING. TAPPING CREWS WILL TAP THROUGH THIS PLASTIC WRAPPER. ALL SERVICES TAPPED INTO A POLYETHYLENE WRAPPED MAIN MUST ALSO BE PLASTIC WRAPPED FOR THE FIRST 3' TOS' FROM THE TAP TOWARDS THE CURB VALVE.

REV.	DATE	REVISION DESCRIPTION	SHEET NO.
-	-	-	-

Filename: *.dgn

THE INFORMATION, INCLUDING ESTIMATED QUANTITIES OF WORK, SHOWN ON THESE SHEETS IS BASED ON LIMITED INVESTIGATIONS BY THE STATE AND IS IN NO WAY WARRANTED TO INDICATE THE CONDITIONS OF ACTUAL QUANTITIES OF WORK WHICH WILL BE REQUIRED.

Date Plotted: October 01, 2014

DESIGNER/DRAFTER: PB
CHECKED BY: ALM
SCALE IN FEET 0 20 40
SCALE 1"=20'

STATE OF CONNECTICUT
DEPARTMENT OF TRANSPORTATION

ENGINEER: BAKER ENGINEERING
APPROVED BY:
DATE:

PROJECT TITLE: SHORE LINE EAST RAILROAD STATIONS

TOWN: CLINTON

DRAWING TITLE: WATER SERVICE PLAN

PROJECT NO. 310-0059
DRAWING NO. M-100
SHEET NO. 03.24

04 - ARCHITECTURAL

INDEX OF DRAWINGS

DRAWING NUMBER	DRAWING TITLE	DRAWING NUMBER	DRAWING TITLE
ARI-001	DRAWING INDEX	A-510	TACTILE SURFACE DETAILS
A-001	ABBREVIATIONS, SYMBOLS & GENERAL NOTES	A-511	METAL EGRESS STAIR DETAILS
A-002	CODE COMPLIANCE PLAN	A-512	PEDESTRIAN BRIDGE DETAILS - 1
A-100	PLATFORM PLAN	A-513	PEDESTRIAN BRIDGE DETAILS - 2
A-101	BRIDGE OVERPASS PLAN	A-514	STAIR TOWER DETAILS - 1
A-102	SHELTER RELOCATION DETAILS	A-515	STAIR TOWER DETAILS - 2
A-120	ROOF PLAN - 1	A-516	STAIR TOWER DETAILS - 3
A-121	ROOF PLAN - 2	A-517	STAIR TOWER DETAILS - 4
A-122	REFLECTED CEILING PLAN - 1	A-518	STAIR TOWER DETAILS - 5
A-123	REFLECTED CEILING PLAN - 2	A-519	STAIR TOWER DETAILS - 6
A-200	NORTH ELEVATION	A-520	STAIR TOWER DETAILS - 7
A-201	SOUTH ELEVATION	A-521	STAIR TOWER DETAILS - 8
A-202	EAST ELEVATION	A-522	STAIR TOWER DETAILS - 9
A-203	WEST ELEVATION	A-523	STAIR TOWER DETAILS - 10
A-204	PLATFORM ELEVATIONS	A-524	STAIR TOWER DETAILS - 11
A-205	INTERIROR ELEVATIONS	A-525	SITE STAIR DETAILS
A-300	PLATFORM/CANOPY SECTION	A-526	MAINTENANCE CLOSET DETAILS
A-301	STAIR TOWER SECTIONS - 1	A-527	ELEVATOR SHAFT DETAILS
A-302	STAIR TOWER SECTIONS - 2	A-600	SCHEDULES
A-303	STAIR TOWER SECTIONS - 3	A-601	WINDOW TYPES - 1
A-304	PEDESTRIAN BRIDGE SECTIONS	A-602	WINDOW TYPES - 2
A-305	SOUTH MAINTENANCE CLOSET SECTIONS		
A-306	NORTH MAINTENANCE CLOSET SECTION & INT. ELEVATIONS		
A-307	SOUTH MAINTENANCE CLOSET SECTIONS		
A-400	ENLARGED PLAN - NORTH		
A-401	ENLARGED PLAN - SOUTH		
A-402	ENLARGED PLAN - ELEVATOR - 1		
A-403	ENLARGED PLAN - ELEVATOR - 2		
A-404	NORTH MAINTENANCE CLOSET PLANS		
A-405	SOUTH MAINTENANCE CLOSET PLANS		
A-500	ROOF DETAILS - 1		
A-501	ROOF DETAILS - 2 R		
A-502	ROOF DETAILS - 3		
A-503	ROOF DETAILS - 4		
A-504	ROOF FRAMING DETAILS		
A-505	MISCELLANEOUS DETAILS - 1		
A-506	MISCELLANEOUS DETAILS - 2		
A-507	GUARDRAIL WINDSCREEN DETAILS		
A-508	GUARDRAIL DETAILS		
A-509	HANDRAIL DETAILS		

DESIGNED BY:

Baker

MICHAEL BAKER ENGINEERING, INC.
500 ENTERPRISE DRIVE
SUITE 2B
ROCKY HILL, CT 06067

REV.	DATE	REVISION DESCRIPTION	SHEET NO.
-	-	-	-
-	-	-	-
-	-	-	-
-	-	-	-
-	-	-	-
-	-	-	-

THE INFORMATION, INCLUDING ESTIMATED QUANTITIES OF WORK, SHOWN ON THESE SHEETS IS BASED ON LIMITED INVESTIGATIONS BY THE STATE AND IS IN NO WAY WARRANTED TO INDICATE THE CONDITIONS OF ACTUAL QUANTITIES OF WORK WHICH WILL BE REQUIRED.

Plotted Date: $DATE$

DESIGNER/DRAFTER: A.DEVAUX

CHECKED BY: D.TUDRYN

STATE OF CONNECTICUT
DEPARTMENT OF TRANSPORTATION

Filename: $FILEA$

SIGNATURE/BLOCK:

Baker
Michael Baker Engineering Inc.
500 Enterprise Drive
Suite 2B
Rocky Hill, CT 06067

STATE OF CONNECTICUT
DEPARTMENT OF TRANSPORTATION
No. 19079
LICENSED
PROFESSIONAL ENGINEER

PROJECT TITLE:

SHORELINE EAST
RAILROAD STATIONS

TOWN: CLINTON

DRAWING TITLE: RAILROAD STATIONS

PROJECT NO. 310-0059

DRAWING NO. ARI-001

SHEET NO. 04.01

Border Version: 11/14/08

Connecticut Department of Transportation
QA/QC Format Check

ARCHITECTURAL ABBREVIATIONS

A.B.	ANCHOR BOLT
ACT	ACOUSTICAL
AFF	ABOVE FINISHED FLOOR
AGG	AGGREGATE
ALUM	ALUMINUM
APPROX	APPROXIMATE
ARCH	ARCHITECTURAL
AVG	AVERAGE
ASSY	ASSEMBLY
B/	BOTTOM OF
B.C.	BOTTOM OF CURB
B.L.	BUILDING LINE
BLDG	BUILDING
BLK	BLOCK
BLKG	BLOCKING
BM	BENCHMARK
BOT	BOTTOM
BRG	BEARING
BRKT	BRACKET
BR & S	BACKER ROD & SEALANT
BSMT	BASEMENT
C-C	CENTER TO CENTER
CAB	CABINET
CB	CATCH BASIN
CEM	CEMENT
C.F.B.	CERAMIC FACING BRICK
C.I.P.	CAST IN PLACE
C.J.	CONSTRUCTION JOINT
℄	CENTERLINE
CLG	CEILING
CLO	CLOSET
CLR	CLEAR
CMU	CONCRETE MASONRY UNIT
COL	COLUMN
CONC	CONCRETE
CONN	CONNECTION
CONST	CONSTRUCTION
CONT	CONTINUOUS
C.T.	CERAMIC TILE
CT. JT.	CONTROL JOINT
CTR	CENTER
CTSK	COUNTERSINK, COUNTERSUNK
DBLE	DOUBLE
DEMO	DEMOLITION
DEPT	DEPARTMENT
DF	DRINKING FOUNTAIN
DIA	DIAMETER
DIAG	DIAGONAL
DIM	DIMENSION
DL	DEAD LOAD
DN	DOWN
DO	DITTO
DR	DOOR
DS	DOWNSPOUT
DTL	DETAIL
DWG	DRAWING
EA	EACH
EL	ELEVATION
ELEC	ELECTRIC
ELEV	ELEVATOR
ENT	ENTRANCE
EQ	EQUAL
EQUIP	EQUIPMENT
ESC	ESCALATOR
EXH	EXHAUST
E. JT.	EXPANSION JOINT
EX	EXISTING
EXT	EXTERIOR
EXP	EXPANSION
F/	FACE OF
FD	FLOOR DRAIN
FDN	FOUNDATION
F.E.	FIRE EXTINGUISHER
FIN FL	FINISHED FLOOR
FIXT.	FIXTURE
FLSHG	FLASHING
FLUOR	FLOURESCENT
FP	FIRE PROTECTION
FRMG	FRAMING
FT	FOOT
FTG	FOOTING
F.O.M.	FACE OF MASONRY
F.O.S.	FACE OF STUD
FURN.	FURNISH
GA	GAUGE
GALV	GALVANIZED
G.B.	GRAB BAR
GL	GLASS
GR	GRADE
GR. BM.	GRADE BEAM
GYP. BD.	GYPSUM BOARD

H.B.	HOSE BIBB
HDW	HARDWARE
HDWD	HARDWOOD
HM	HOLLOW METAL
HORIZ	HORIZONTAL
HP	HIGH POINT
HR	HANDRAIL
HT	HEIGHT
HTR	HEATER
HYD	HYDRAULIC
H.S.	HEAT STRENGTHENED
HSS	HOLLOW STEEL SECTION
ID	INSIDE DIAMETER
I.E.	INVERTED ELEVATION
INCL	INCLUDING
(") IN	INCH
INSUL	INSULATE, INSULATION
INT	INTERIOR
J.C.	JANITOR'S CLOSET
JT	JOINT
K	KIP
K.O.	KNOCK OUT
KPL	KICKPLATE
L	ANGLE
LAM	LAMINATED
LB	POUNDS
L.H.	LEFT HAND
L.H.R.	LEFT HAND REVERSE
LL	LIVE LOAD
LLH	LONG LEG HORIZONTAL
LLV	LONG LEG VERTICAL
LP	LOW POINT
LT	LIGHT
LT. STD.	LIGHT STANDARD
MATL	MATERIAL
MAX	MAXIMUM
MBR	MEMBER
M.C.B.	METAL CORNER BEAD
MECH	MECHANICAL
MEMB	MEMBRANE
MEZZ	MEZZANINE
MFR	MANUFACTURER
MH	MANHOLE
MIN	MINIMUM
MISC	MISCELLANEOUS
MTD	MOUNTED
MTL	METAL
NEOP	NEOPRENE
NIC	NOT IN CONTRACT
NO. , #	NUMBER
NOM	NOMINAL
NRP	NON-REMOVABLE PIN
NTS	NOT TO SCALE
OA	OVERALL
O.C.	ON CENTER
O.D.	OUTSIDE DIAMETER
OFF.	OFFICE
O.H.	OVERHEAD
OPP. H.	OPPOSITE HAND
OPNG	OPENING
PASS.	PASSENGER
P.C.	PRECAST CONCRETE
PERF.	PERFORATED
ℙL	PLATE
P.L.	PROPERTY LINE
PLAS	PLASTER
PLWD	PLYWOOD
PNL	PANEL
PNT	PAINT
PREFAB	PREFABRICATED
P.S.F.	POUNDS PER SQ. FOOT
P.S.I.	POUNDS PER SQ. INCH
PT	POINT
P.T.	PRESSURE TREATED
PTD	PAINTED
PTN	PARTITION
PVC	POLYVINYL CHLORIDE
PVMT	PAVEMENT
PWR	POWER
QTY	QUANTITY

R	RADIUS
R.D.	ROOF DRAIN
REBAR	REINFORCING BAR
REF	REFERENCE
REINF	REINFORCED
REQD	REQUIRED
REV	REVISION
R.H.	RIGHT HAND
R.H.R.	RIGHT HAND REVERSE
RM.	ROOM
RND	ROUND
RO	ROUGH OPENING
R.O.W.	RIGHT OF WAY
RR	RAILROAD
SCHED	SCHEDULE
S.C.	SOLID CORE
SECT	SECTION
SF	SQUARE FOOT
SGFT	STRUCTURAL GLAZED FACING TILE
SHT	SHEET
SIM	SIMILAR
SPEC	SPECIFICATION
SQ	SQUARE
SS	STAINLESS STEEL
SSP	STANDARD STEEL PIPE
STA.	STATION
STD	STANDARD
STL	STEEL
STOR	STORAGE
STRUCT	STRUCTURAL
STN	STAIN, STAINED
SURF. MTD.	SURFACE MOUNTED
SWC	SOLID WOOD CORE
T	TOILET
T/, T.O.	TOP OF
T.C.	TOP OF CURB
TEL	TELEPHONE
TEMP	TEMPERATURE
T.F.	TROWEL FINISH
T&G	TONGUE AND GROOVE
THK	THICK
T.O.S.	TOP OF STEEL
TS	TUBE STEEL
TYP	TYPICAL
UC	UNDERCUT
U.L.	UNDERWRITERS LABORATORY
UNEX.	UNEXCAVATED
UNFIN.	UNFINISHED
U.N.O.	UNLESS NOTED OTHERWISE
UR	URINAL
UTIL	UTILITY
VB	VAPOR BARRIER
VCT	VINYL COMPOSITION TILE
VEN	VENEER
VENT.	VENTILATION
VERT	VERTICAL
VEST.	VESTABULE
VFT	VINYL FLOOR TILE
V.I.F.	VERIFY IN FIELD
VOL	VOLUME
V.T.R	VENT THRU ROOF
VWC	VINYL WALL COVERING
W/	WITH
W/O	WITHOUT
W.C.	WATER CLOSET
WD	WOOD
WDW	WINDOW
W.H.	WATER HEATER
/WP	WORK POINT
W.P.	WATER PROOF
WSHR	WASHER
W.W.F.	WELDED WIRE FABRIC
W.W.M.	WELDED WIRE MESH
YD	YARD

SYMBOLS

TITLE — A / A-100 — SCALE: N.T.S.

TITLE BAR - INDICATES DESCRIPTION, SCALE, DETAIL DESIGNATION., & DRAWING REFERENCE NO.

TITLE — SCALE: N.T.S.

TITLE BAR - INDICATES DESCRIPTION AND SCALE

A / A-100

SECTION MARKER - INDICATES SECTION DESIGNATION AND SHEET WHERE LOCATED

A / A-100

DETAIL MARKER - INDICATES DETAIL DESIGNATION AND SHEET WHERE LOCATED

A / A-200

EXTERIOR ELEVATION MARKER - INDICATES ELEVATION DESIGNATION AND SHEET WHERE LOCATED

1 / A-400 / 2 / 3

INTERIOR ELEVATION MARKER - INDICATES ELEVATION DESIGNATION AND SHEET WHERE LOCATED

N

PROJECT NORTH MARKER

+0'-0" FINISH FLOOR

DATUM OR LEVEL LINE MARKER - INDICATES ELEVATION LINE ON ELEVATION, SECTION, OR PLAN

CUT LINE OR MATCH LINE - INDICATES CUTAWAY SECTION OF DRAWING

A

COLUMN LINE - STRUCTURAL GRID CENTERLINE DESIGNATION

12 / 5

ROOF SLOPE MARKER - INDICATES ROOF SLOPE ON ELEVATIONS AND SECTIONS

SLOPE 12:5

ROOF SLOPE MARKER - INDICATES ROOF SLOPE ON ROOF PLAN

100-1

DOOR NUMBER MARKER - INDICATES DOOR NUMBER. REFER TO DOOR SCHEDULE FOR INFORMATION

NAME 100

ROOM IDENTIFICATION MARKER - INDICATES ROOM NAME & NUMBER. REFER TO FINISH SCHEDULE FOR INFORMATION

1

WALL TYPE MARKER - INDICATES PARTITION TYPE. REFER TO PARTITION DETAILS FOR INFORMATION

W1

WINDOW TYPE MARKER - INDICATES WINDOW NUMBER. REFER TO WINDOW TYPE DRAWING FOR INFORMATION

1

KEYNOTE MARKER - INDICATES KEYNOTE NUMBER. REFER TO KEYNOTES FOR INFORMATION

1

REVISION MARKER - INDICATES REVISION NUMBER. REFER TO REVISION BLOCK FOR INFORMATION

MATERIAL SYMBOLS

SUSPENDED CEILING TILE	STONE VENEER	CELLULAR PVC
ALUMINUM	GRAVEL	INSULATION (BATT)
STEEL OR STAINLESS STEEL	EARTH	INSULATION (RIGID)
CONCRETE	METAL WALL PANEL	GLASS
CEMENT OR SAND	GYPSUM BOARD	JOINT FILLER
EXTERIOR GYP. SHEATHING	CONCRETE BLOCK	JOINT SEALANT
WOOD	BRICK	MEMBRANE WATERPROOFING

GENERAL CONTRACTOR NOTES:

1. DRAWINGS AND GENERAL PROVISIONS OF THE CONTRACT, INCLUDING GENERAL CONDITIONS OF DIVISION 1, STATE OF CONNECTICUT, DEPARTMENT OF TRANSPORTATION, STANDARD SPECIFICATIONS FOR ROADS, BRIDGES, AND INCIDENTAL CONSTRUCTION, FORM 816 - 2004 AND SUPPLEMENTAL SPECIFICATIONS THERETO, SHALL BE A PART OF THIS CONTRACT.

2. DRAWING NOTES ARE NOT INTENDED TO REPLACE SPECIFICATIONS. SEE SPECIFICATIONS FOR REQUIREMENTS IN ADDITION TO DRAWING NOTES.

3. METHODS OF DEMOLITION, AND ERECTION IS THE CONTRACTOR'S RESPONSIBILITY.

4. THE CONTRACTOR SHALL REPORT ANY DISCREPANCIES IN THE DRAWINGS AND/OR SPECIFICATIONS TO THE ENGINEER FOR CLARIFICATIONS OR ADJUSTMENTS PRIOR TO COMMENCING WORK.

5. THE CONTRACTOR SHALL PHASE THEIR WORK SO AS TO MAINTAIN THE NORMAL TRAIN OPERATIONS AND EXISTING ACCESS FOR PASSENGER MOVEMENT FOR BOARDING AND DEPARTING THE TRAINS AND THE EXISTING ACCESS TO ADJACENT PARKING FACILITIES.

6. CONTRACTORS MUST ESTABLISH A TWENTY-FIVE (25) FOOT FOUL LINE PRIOR TO THE START OF WORK BY EITHER DRIVING STAKES, TAPING OFF OR ERECTING A TEMPORARY FENCE, OR PROVIDING AN ALTERNATE METHOD AS APPROVED BY THE AMTRAK REPRESENTATIVE. REFER TO THE SPECIFICATIONS FOR MORE INFORMATION PERTAINING TO AMTRAK REQUIREMENTS.

7. THE CONTRACTOR SHALL PROTECT THE GENERAL PUBLIC, RAILROAD PERSONNEL AND ALL RAILROAD OPERATIONS FROM CONSTRUCTION ACTIVITIES AND SHALL PERFORM THEIR WORK IN ACCORDANCE WITH THE CONTRACT REQUIREMENTS, STATEMENT OF WORK, THE NATIONAL ELECTRIC SAFETY CODE (NESC), AREMA, AMTRAK, THE HOST RAILROAD REGULATIONS, OSHA AND THE REGULATIONS OF THE AUTHORITIES HAVING JURISDICTION.

8. THE CONTRACTOR SHALL COORDINATE WITH AMTRAK TO LOCATE, PROTECT, AND RESTORE VERIFICATION AND MARKING OF ALL UTILITIES, SIGNAL AND COMMUNICATION CABLES MUST BE PERFORMED PRIOR TO ANY EXCAVATION.

9. THE CONTRACTOR SHALL SUBMIT FOR REVIEW AND APPROVAL A WORK PLAN THAT FULLY DESCRIBES THE WORK TO BE PERFORMED. THE WORK PLAN MUST ENCOMPASS THE TIME FROM NOTICE TO PROCEED TO CLOSE OUT OF THE PROJECT. THE WORK PLAN MUST DESCRIBE THE TYPES OF ACTIVITIES, LOCATION OF ACTIVITIES ON THE PROJECT SITE, EQUIPMENT, MATERIAL AND LABOR. THE WORK AND SEQUENCING MUST CONTAIN THE TIME FRAMES FOR EACH ACTIVITY.

10. ALL CONSTRUCTION ACTIVITIES ARE CONSIDERED FOULING THE TRACK. THE CONTRACTOR WILL BE REQUIRED, DURING THE CONSTRUCTION, TO CLEAR THE FOUL AREA BY REMOVING ALL PERSONNEL AND EQUIPMENT A MINIMUM OF 15 FEET FROM THE CENTERLINE OF THE NEAREST TRACK DURING TRAIN OPERATIONS. THIS NOTICE FOR CLEARING THE FOUL AREA DURING TRAIN OPERATIONS WILL BE GIVEN BY A RAILROAD PROTECTION WATCHMAN WHO WILL BE PRESENT DURING CONSTRUCTION. THE CONTRACTOR MUST CLEAR THE FOUL AREA AND REMAIN CLEAR OF THE FOUL AREA, UNTIL ALLOWED TO RETURN AS INSTRUCTED BY THE WATCHMAN. THIS REQUIREMENT TO CLEAR AND REMAIN CLEAR OF THE FOUL AREA MAY OCCUR AT ANY TIME DURING THE CONTRACTOR'S ACTIVITIES. THE WATCHMAN ACTIVITIES AND PRESENCE WILL BE DETERMINED BY AMTRAK AND WILL BE BASED UPON THE APPROVED WORK PLAN SUBMITTED BY THE CONTRACTOR. ALL COST OF THE WATCHMAN ACTIVITIES WILL BE BORNE BY AMTRAK.

11. THE CONTRACTOR SHALL ARRANGE AT THEIR EXPENSE FOR ANY STAGING AND STORAGE FOR EQUIPMENT AND MATERIAL. NO EQUIPMENT OR MATERIAL SHALL BE STAGED OR STORED IN THE FOUL AREA WHEN CONSTRUCTION ACTIVITIES ARE NOT TAKING PLACE. THE CONTRACTOR SHALL CLEAN UP THE FOUL AREA AFTER EACH WORK DAY.

12. CONTRACTOR MUST SUPPLY AN ADEQUATE LENGTH OF GROUNDING CABLE (4/0 COPPER WITH APPROVED CLAMPS) TO GROUND EACH PIECE OF EQUIPMENT WORKING NEAR OR ADJACENT TO ANY OVERHEAD WIRE. THIS GROUND CONNECTION IS SUBJECT TO AMTRAK INSPECTION. REFER TO AMTRAK SPECIFICATIONS.

REV.	DATE	REVISION DESCRIPTION	SHEET NO.

Filename: FD_MSH_ARC_0027_0059_A-001.dgn

THE INFORMATION, INCLUDING ESTIMATED QUANTITIES OF WORK, SHOWN ON THESE SHEETS IS BASED ON LIMITED INVESTIGATIONS BY THE STATE AND IS IN NO WAY WARRANTED TO INDICATE THE CONDITIONS OF ACTUAL QUANTITIES OF WORK WHICH WILL BE REQUIRED.

Date Plotted: October 01, 2014

DESIGNER/DRAFTER: D. Tudryn / R. Wright
CHECKED BY: D. TUDRYN
SCALE AS NOTED

STATE OF CONNECTICUT
DEPARTMENT OF TRANSPORTATION

ENGINEER: BAKER ENGINEERING
APPROVED BY:
DATE:

PROJECT TITLE: SHORE LINE EAST RAILROAD STATIONS

TOWN: CLINTON

DRAWING TITLE: ABBREVIATIONS, SYMBOLS & GENERAL NOTES

PROJECT NO. 310-0059
DRAWING NO. A-001
SHEET NO. 04.02

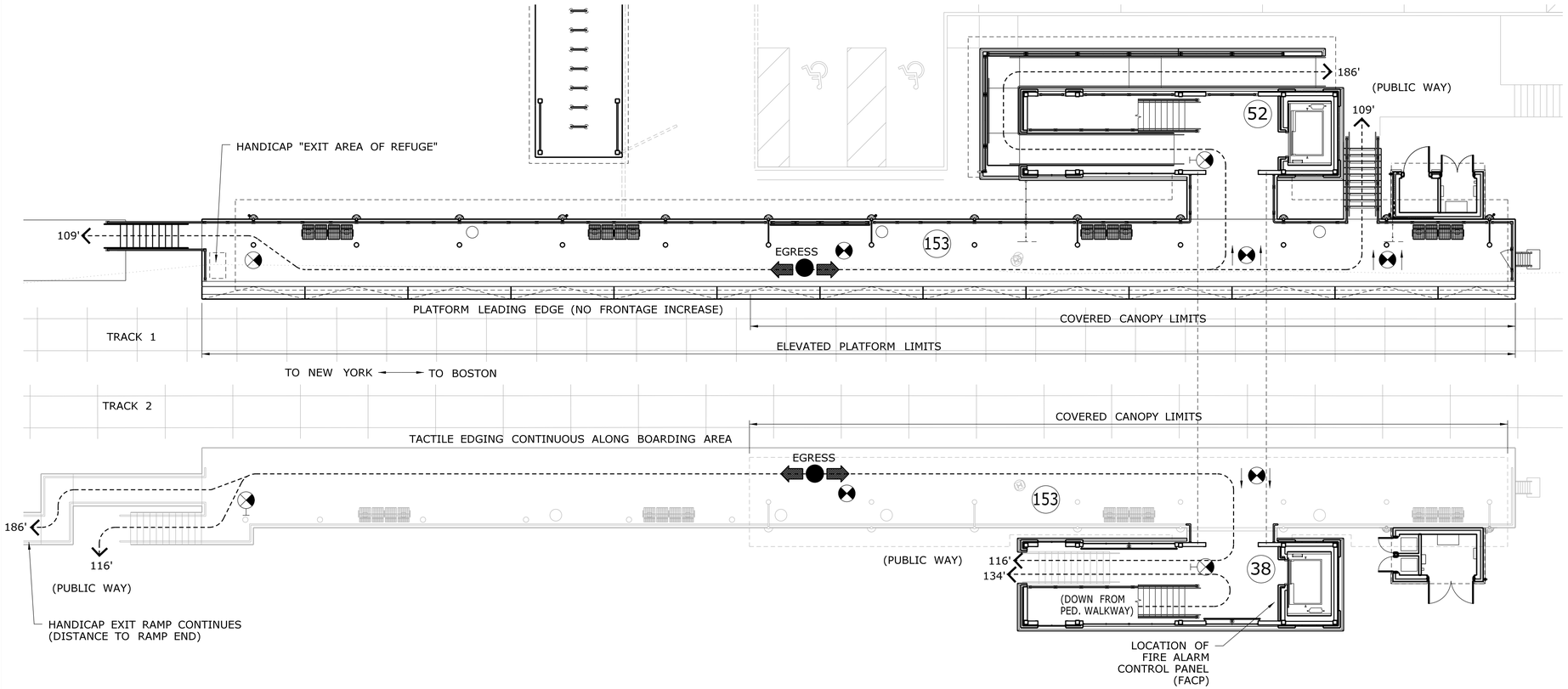

N

PLATFORM PLAN — **A** / **A-002**

SCALE: N.T.S.

NOTE - SIMILAR BOTH SIDES

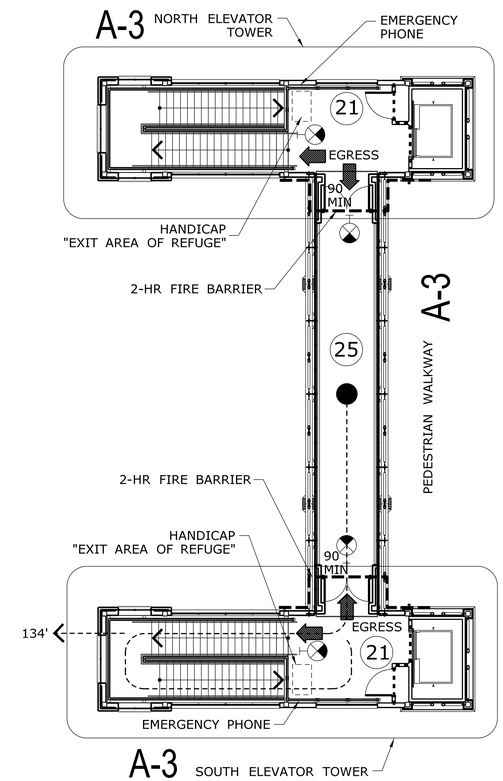

N

BRIDGE PLAN — **B** / **A-002**

SCALE: N.T.S.

TRAIN STATION CODE ANALYSIS AND GENERAL REQUIREMENTS

BUILDING USE GROUP PER SECTION 303.1 : USE GROUP A-3
"WAITING AREAS IN PASSENGER TERMINALS"

CT STATE THRESHOLD LIMITS EXCEEDED : NO

CONSTRUCTION TYPE: IIB (PER TABLE 601) - EXTERIOR WALLS ARE OF NONCOMBUSTIBLE MATERIALS AND THE INTERIOR BUILDING ELEMENTS ARE OF ANY MATERIAL PERMITTED BY THE CODE.

STRUCTURAL FRAME: 0 HOURS
BEARING WALLS: 0 HOURS
NON-BEARING WALLS AND PARTITIONS: 0 HOURS
FLOORS: 0 HOURS
ROOFS: 0 HOURS

NORTH AND SOUTH TOWERS CONSIDERED TWO SEPARATE STRUCTURES (PER IBC 2003 SECTION 3104.2)

ALL LEVELS ABOVE GRADE

TABLE 503 - HEIGHT/AREA LIMITS

(ALLOWABLE) 2 STORIES, 55-FEET / 9,500 S.F.
(ACTUAL) 2 STORIES, 46'-6" / 1,256 S.F.

STAIR EGRESS WIDTH = 56"/.3 = 186 PERSONS PER STAIRWAY
(MEETS OCCUPANCY LOAD FOR SECOND FLOOR AREAS)

PLATFORM CODE ANALYSIS

COVERED CANOPY SECTIONS CONTRIBUTE TO BUILDING AREA (PER 503.1)
(ASSUMES FULL CANOPY COVERAGE)

PEDESTRIAN WALKWAY CONSTRUCTION

PEDESTRIAN WALKWAY = 361 GSF (DOES NOT CONTRIBUTE TO OVERALL SF PER 2003 IBC SECTION 3104.1)

PER 2003 IBC SECTION 3104.3, THE PEDESTRIAN WALKWAY SHALL BE OF NONCOMBUSTIBLE CONSTRUCTION.

FIRE BARRIERS BETWEEN PESEDTRIAN WALKWAYS AND BUILDINGS (PER IBC 2003 SECTION 3104.5)
(STAIR TOWERS CONSIDERED BUILDINGS)

WALKWAYS SHALL BE SEPARATED FROM THE INTERIOR OF THE BUILDING BY FIRE BARRIER WALLS WITH A FIRE-RESISTANCE RATING OF NOT LESS THAN 2 HOURS. THIS PROTECTION SHALL EXTEND VERTICALLY FROM A POINT 10 FEET ABOVE THE WALKWAY ROOF SURFACE OR THE CONNECTED BUILDING ROOF LINE, WHICHEVER IS LOWER, DOWN TO A POINT 10 FEET BELOW THE WALKWAY AND HORIZONTALLY 10 FEET FROM EACH SIDE OF THE PEDESTRIAN WALKWAY.
OPENINGS WITHIN THE 10-FOOT HORIZONTAL EXTENSION OF THE PROTECTED WALLS BEYOND THE WALKWAY SHALL BE EQUIPPED WITH DEVICES PROVIDING A 3/4-HOUR FIRE PROTECTION RATING IN ACCORDANCE WITH SECTION 715.

PEDESTRIAN WALKWAY EGRESS (PER IBC 2003 SECTION 3104.7)
ACCESS SHALL BE PROVIDED AT ALL TIMES TO A PEDESTRIAN WALKWAY THAT SERVES AS A REQUIRED EXIT.
(DOORS TO PEDESTRIAN WALKWAY SHALL NOT BE LOCKABLE)
(ACTUAL = 124'-0" FROM CENTER OF PEDESTRIAN WALKWAY TO GRADE)

PEDESTRIAN WALKWAY WIDTH (PER IBC 2003 SECTION 3104.8)
THE UNOBSTRUCTED WIDTH OF PEDESTRIAN WALKWAYS SHALL NOT BE LESS THAN 36 INCHES. THE TOTAL WIDTH SHALL NOT EXCEED 30 FEET.
(ACTUAL WIDTH AT NARROWEST POINT = 67¼")

PEDESTRIAN WALKWAY EXIT EGRESS TRAVEL (PER IBC 2003 SECTION 3104.9)
THE LENGTH OF EXIT ACCESS TRAVEL SHALL NOT EXCEED 200 FEET.

CODES

EXCEPT AS AMENDED, ALTERED OR DELETED BY THE CONNECTICUT SUPPLEMENT, THE CODES LISTED BELOW ARE ADOPTED BY REFERENCE AS THE 2005 STATE BUILDING CODE (WITH 2009 AMENDMENTS), AND APPLY TO THE CONSTRUCTION OF THIS FACILITY:

2003 INTERNATIONAL BUILDING CODE
2003 INTERNATIONAL RESIDENTIAL CODE
2003 INTERNATIONAL EXISTING BUILDING CODE
2003 INTERNATIONAL MECHANICAL CODE
2003 INTERNATIONAL PLUMBING CODE
2006 INTERNATIONAL ENERGY CONSERVATION CODE
2005 NATIONAL ELECTRICAL CODE NFPA 70-2005
ICC/ANSI A117.1-2003
2005 NFPA 70 NATIONAL ELECTRICAL CODE OF THE NFPA
ASME A17.1, SAFETY CODE FOR ELEVATORS AND ESCALATORS
ADA STANDARDS FOR TRANSPORTATION FACILITIES (2006)
(REFER TO CONTRACT SPECIFICATIONS, STRUCTURAL AND ELECTRICAL PLANS FOR OTHER REFERENCES AND CODES WHICH MAY APPLY)

OCCUPANCY

OCCUPANCY (BASED ON IBC 2003 TABLE 1004.1.2, 15 GSF PER OCCUPANT - SIMILAR TO AIRPORT WAITNG AREAS)

PEDESTRIAN WALKWAY (361 GSF) = 25 OCCUPANTS
NORTH TOWER, 1ST FLOOR (771 GSF) = 52 OCCUPANTS
NORTH TOWER, 2ND FLOOR (303 GSF) = 21 OCCUPANTS
SOUTH TOWER, 1ST FLOOR (556 GSF) = 38 OCCUPANTS
SOUTH TOWER, SECOND FLOOR (303 GSF) = 21 OCCUPANTS
NORTH PLATFORM (2284 GSF) = 153 OCCUPANTS
SOUTH PLATFORM (2284 GSF) = 153 OCCUPANTS

=463 TOTAL OCCUPANTS

LEGEND

- ONE-HOUR RATED PARTITION
- TWO-HOUR FIRE BARRIER
- 45 MIN — DOOR FIRE PROTECTION RATING
- DIRECTIONAL ILLUMINATED EXIT SIGN
- ILLUMINATED EXIT SIGN
- 25 — NUMBER OF OCCUPANTS IN SPACE
- B — OCCUPANCY CLASSIFICATION
- XX — EGRESS TRAVEL DISTANCE

REV.	DATE	REVISION DESCRIPTION	SHEET NO.

Filename: FD_MSH_ARC_0027_0059_A-002.dgn

THE INFORMATION, INCLUDING ESTIMATED QUANTITIES OF WORK, SHOWN ON THESE SHEETS IS BASED ON LIMITED INVESTIGATIONS BY THE STATE AND IS IN NO WAY WARRANTED TO INDICATE THE CONDITIONS OF ACTUAL QUANTITIES OF WORK WHICH WILL BE REQUIRED.

Date Plotted: October 01, 2014

DESIGNER/DRAFTER: D. TUDRYN / R. WRIGHT
CHECKED BY: D. TUDRYN

SCALE AS NOTED

STATE OF CONNECTICUT
DEPARTMENT OF TRANSPORTATION

ENGINEER: BAKER ENGINEERING
APPROVED BY:
DATE:

PROJECT TITLE: **SHORE LINE EAST RAILROAD STATIONS**

TOWN: **CLINTON**

DRAWING TITLE: **CODE COMPLIANCE**

PROJECT NO. **310-0059**
DRAWING NO. **A-002**
SHEET NO. **04.03**

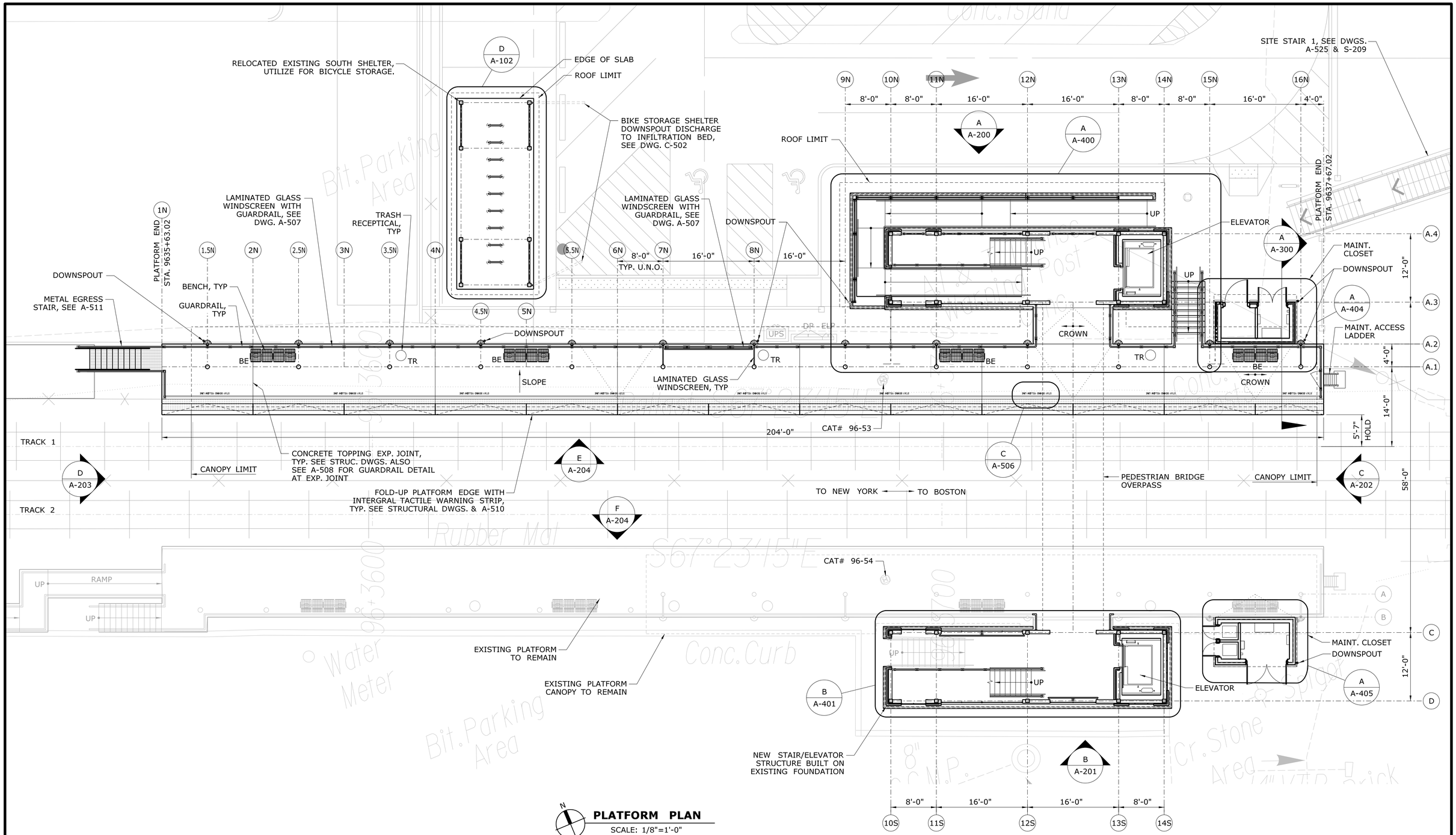

PLATFORM PLAN

SCALE: 1/8"=1'-0"

REV.	DATE	REVISION DESCRIPTION	SHEET NO.

Filename: FD_MSH_ARC_0027_0059_A-100.dgn

THE INFORMATION, INCLUDING ESTIMATED QUANTITIES OF WORK, SHOWN ON THESE SHEETS IS BASED ON LIMITED INVESTIGATIONS BY THE STATE AND IS IN NO WAY WARRANTED TO INDICATE THE CONDITIONS OF ACTUAL QUANTITIES OF WORK WHICH WILL BE REQUIRED.

Date Plotted: October 01, 2014

DESIGNER/DRAFTER: D. Tudryn / R. Wright

CHECKED BY: -

SCALE AS NOTED

STATE OF CONNECTICUT
DEPARTMENT OF TRANSPORTATION

ENGINEER: BAKER ENGINEERING

APPROVED BY: DATE:

PROJECT TITLE: **SHORE LINE EAST RAILROAD STATIONS**

TOWN: **CLINTON**

DRAWING TITLE: **PLATFORM PLAN**

PROJECT NO. **310-0059**

DRAWING NO. **A-100**

SHEET NO. **04.04**

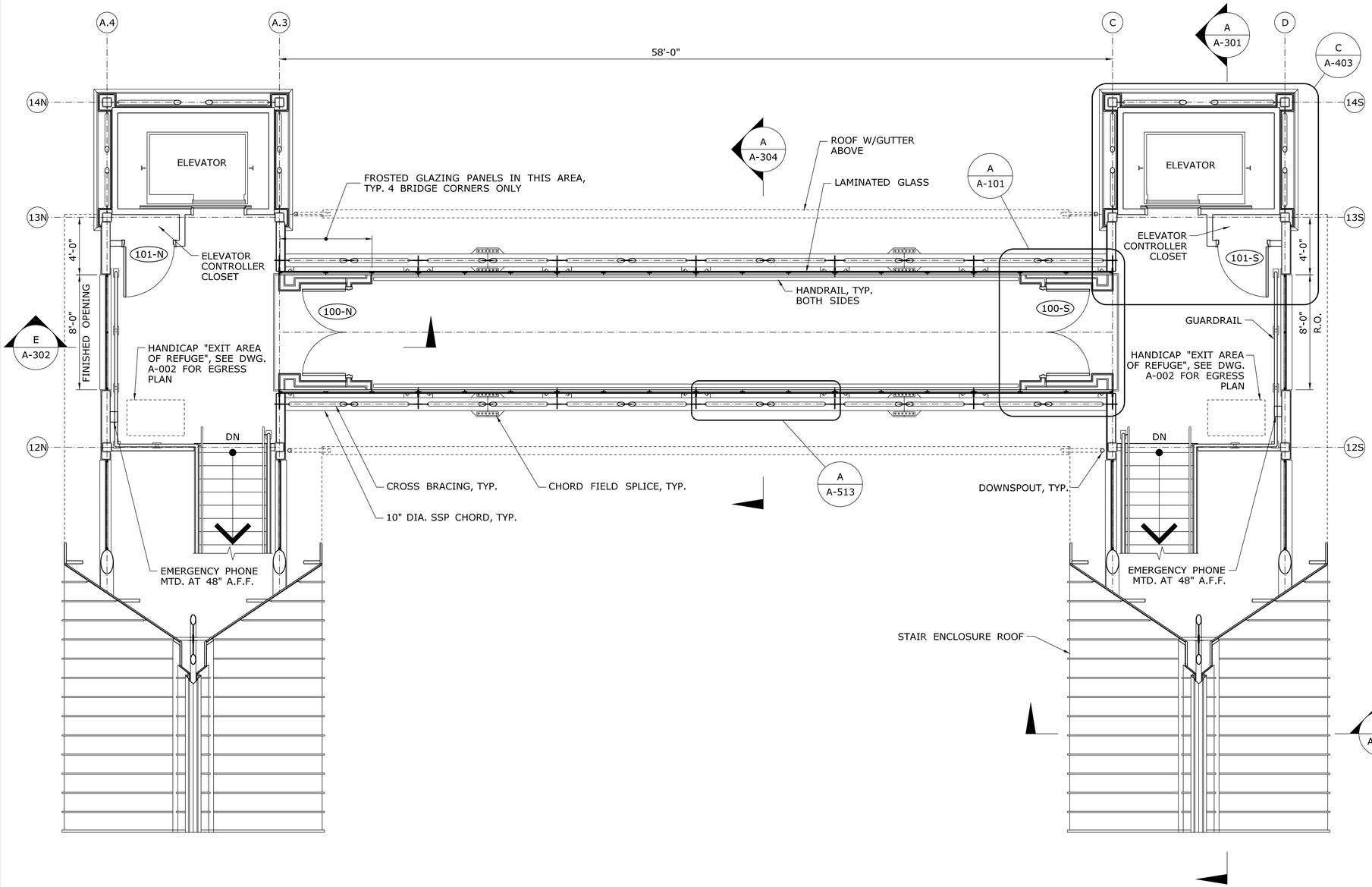

BRIDGE PLAN
SCALE: 1/4" =1'-0"

NOTE: RAMP, PLATFORMS & PLATFORM CANOPIES BELOW ARE NOT SHOWN FOR CLARITY.

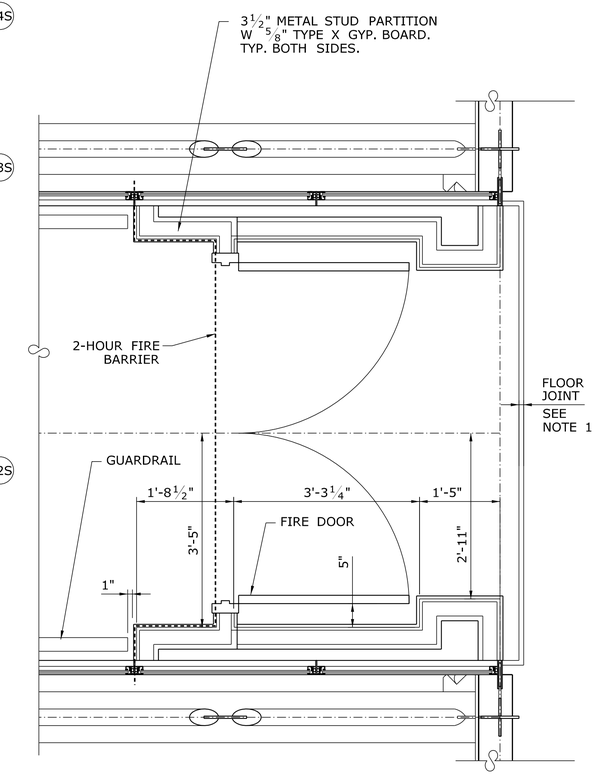

ENLARGED PLAN
(TYPICAL BOTH ENDS OF BRIDGE)
SCALE: 3/4"=1'-0"
A A-101

NOTES:
1. FLOOR JOINT BETWEEN BRIDGE & SOUTH STAIR TOWER TO BE A CONTROL JOINT. FLOOR JOINT BETWEEN THE BRIDGE & NORTH STAIR TOWER TO BE AN EXPANSION JOINT. SEE STRUCTURAL DWGS. FOR DETAILS.

REV.	DATE	REVISION DESCRIPTION	SHEET NO.

Filename: FD_MSH_ARC_0027_0059_A-101.dgn

THE INFORMATION, INCLUDING ESTIMATED QUANTITIES OF WORK, SHOWN ON THESE SHEETS IS BASED ON LIMITED INVESTIGATIONS BY THE STATE AND IS IN NO WAY WARRANTED TO INDICATE THE CONDITIONS OF ACTUAL QUANTITIES OF WORK WHICH WILL BE REQUIRED.

Date Plotted: October 01, 2014

DESIGNER/DRAFTER: D. TUDRYN / R. WRIGHT
CHECKED BY: D. TUDRYN
SCALE AS NOTED

STATE OF CONNECTICUT
DEPARTMENT OF TRANSPORTATION

ENGINEER: BAKER ENGINEERING
APPROVED BY:
DATE:

PROJECT TITLE:
SHORE LINE EAST RAILROAD STATIONS

TOWN: CLINTON

DRAWING TITLE: BRIDGE OVERPASS PLAN

PROJECT NO. 310-0059
DRAWING NO. A-101
SHEET NO. 04.05

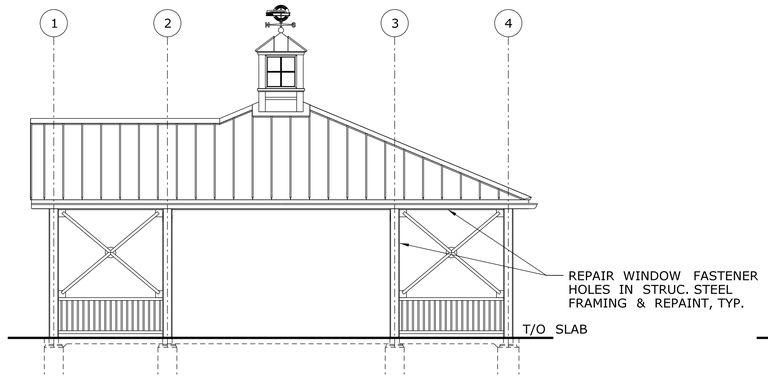

WEST ELEVATION — **A / A-102**
SCALE: 3/16"=1'-0"

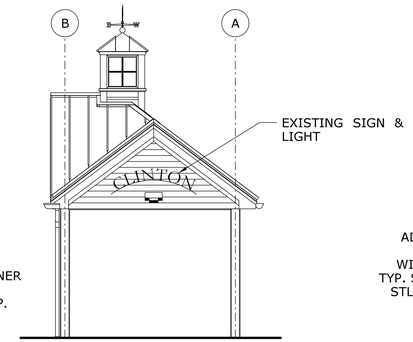

NORTH ELEVATION — **B / A-102**
SCALE: 3/16"=1'-0"

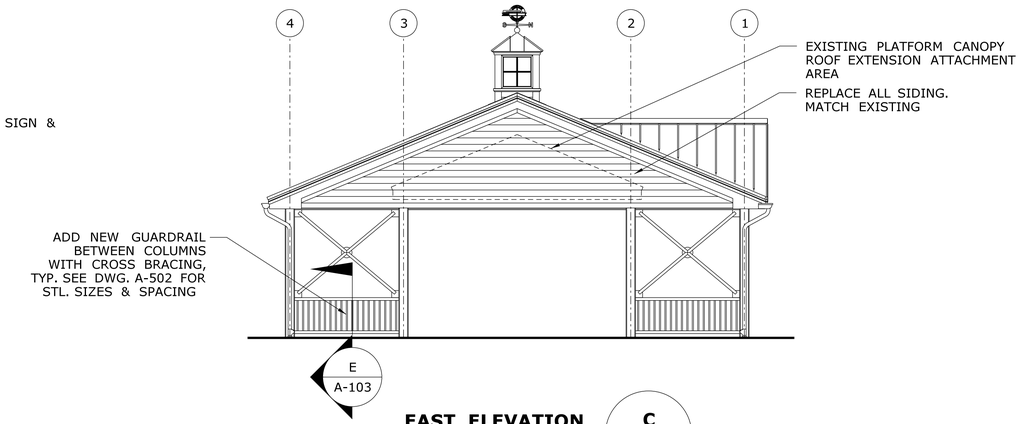

EAST ELEVATION — **C / A-102**
SCALE: 3/16"=1'-0"

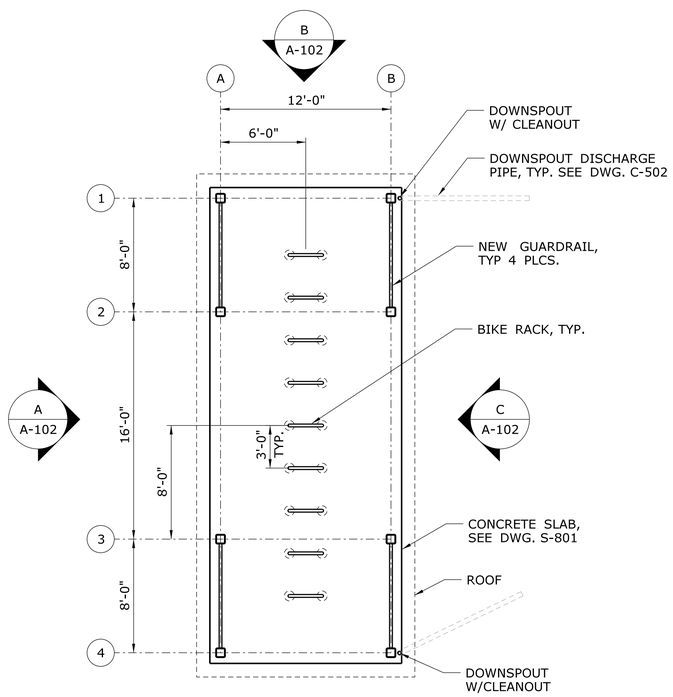

SHELTER PLAN — **D / A-100**
SCALE: 3/16"=1'-0"

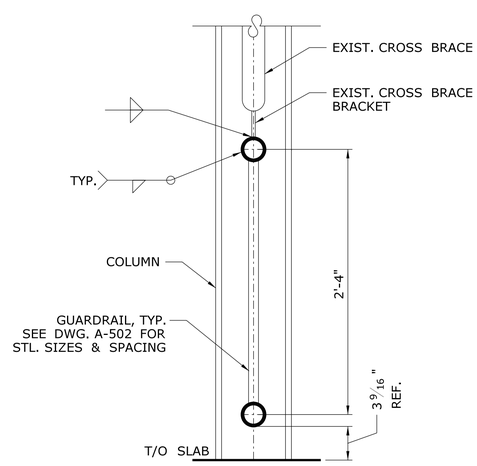

NEW GUARDRAIL DETAIL — **E / A-102**
SCALE: 1 1/2"=1'-0"

REV.	DATE	REVISION DESCRIPTION	SHEET NO.

Filename: FD_MSH_ARC_0027_0059_A-102.dgn

THE INFORMATION, INCLUDING ESTIMATED QUANTITIES OF WORK, SHOWN ON THESE SHEETS IS BASED ON LIMITED INVESTIGATIONS BY THE STATE AND IS IN NO WAY WARRANTED TO INDICATE THE CONDITIONS OF ACTUAL QUANTITIES OF WORK WHICH WILL BE REQUIRED.

Date Plotted: October 01, 2014

DESIGNER/DRAFTER: D. TUDRYN / R. WRIGHT
CHECKED BY: D. TUDRYN
SCALE AS NOTED

STATE OF CONNECTICUT
DEPARTMENT OF TRANSPORTATION

ENGINEER: BAKER ENGINEERING
APPROVED BY:
DATE:

PROJECT TITLE: **SHORE LINE EAST RAILROAD STATIONS**

TOWN: **CLINTON**

DRAWING TITLE: **SHELTER RELOCATION DETAILS**

PROJECT NO. **310-0059**
DRAWING NO. **A-102**
SHEET NO. **04.06**

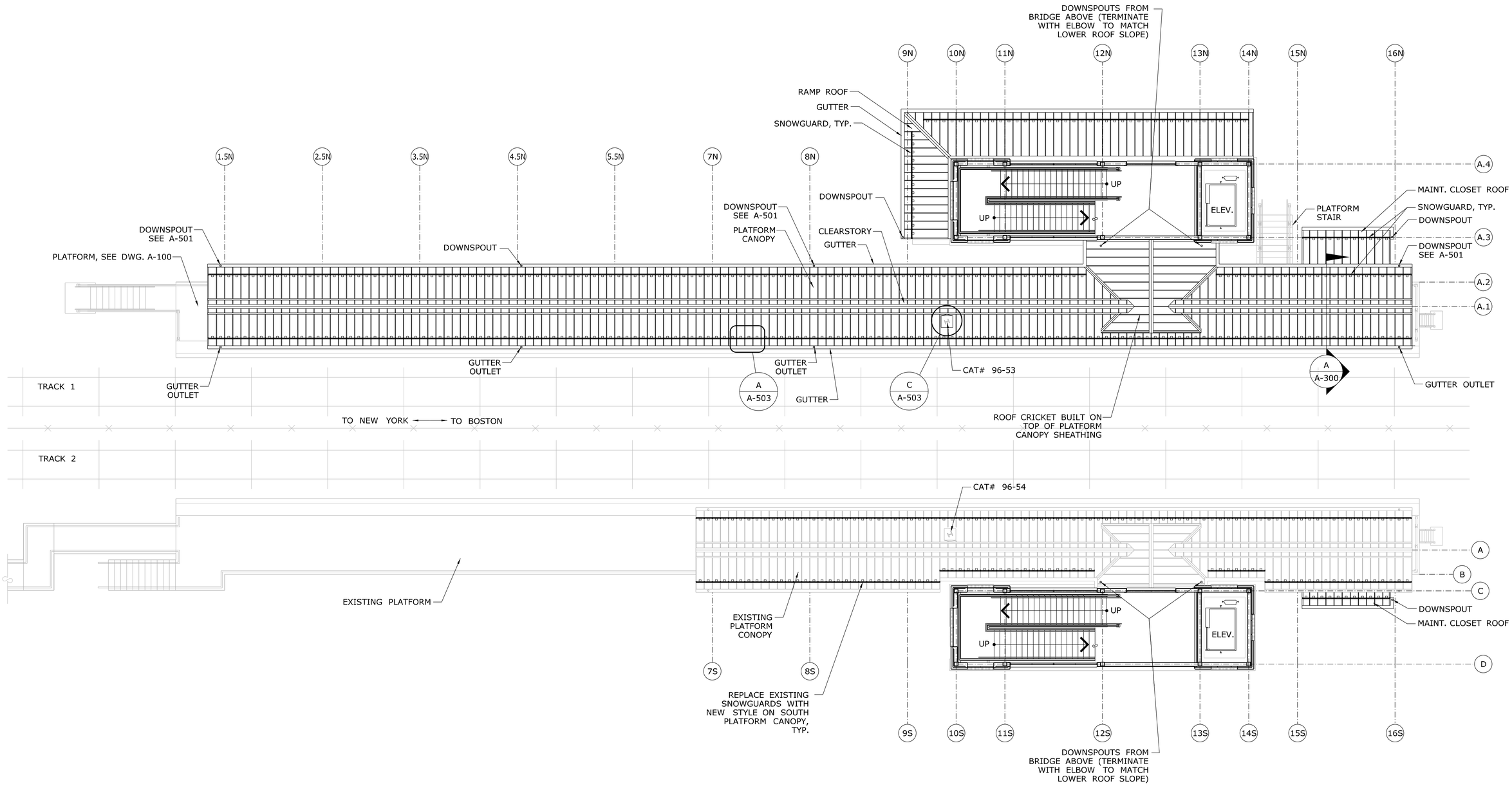

LOWER ROOF PLAN

SCALE: 1/8"=1'-0"

REV.	DATE	REVISION DESCRIPTION	SHEET NO.

Filename: FD_MSH_ARC_0027_0059_A-120.dgn

THE INFORMATION, INCLUDING ESTIMATED QUANTITIES OF WORK, SHOWN ON THESE SHEETS IS BASED ON LIMITED INVESTIGATIONS BY THE STATE AND IS IN NO WAY WARRANTED TO INDICATE THE CONDITIONS OF ACTUAL QUANTITIES OF WORK WHICH WILL BE REQUIRED.

Date Plotted: October 01, 2014

DESIGNER/DRAFTER: D. Tudryn / R. Wright

CHECKED BY: D. TUDRYN

SCALE AS NOTED

STATE OF CONNECTICUT
DEPARTMENT OF TRANSPORTATION

ENGINEER: BAKER ENGINEERING

APPROVED BY:

DATE:

PROJECT TITLE:

SHORE LINE EAST RAILROAD STATIONS

TOWN: **CLINTON**

DRAWING TITLE: **ROOF PLAN - 1**

PROJECT NO. **310-0059**

DRAWING NO. **A-120**

SHEET NO. **04.07**

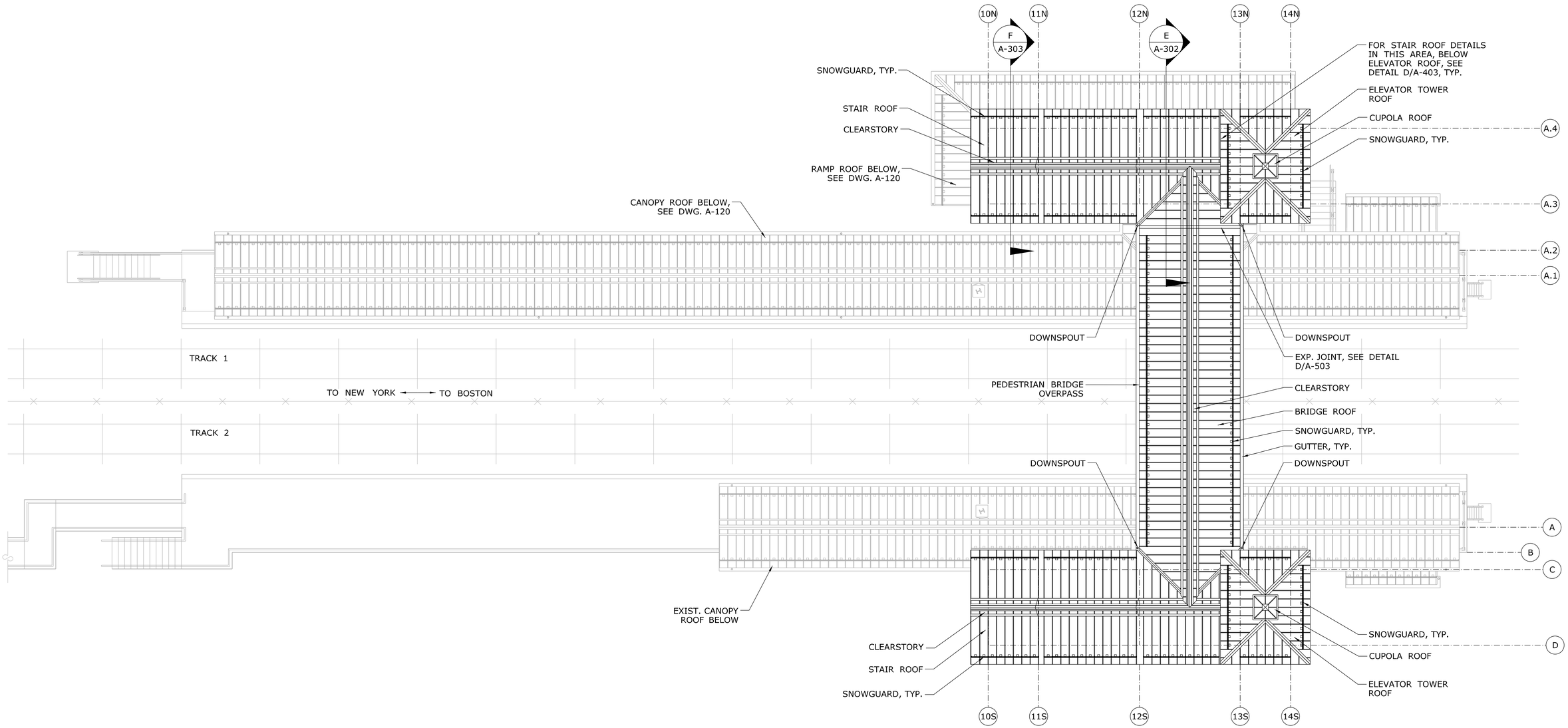

UPPER ROOF PLAN

SCALE: 1/8"=1'-0"

REV.	DATE	REVISION DESCRIPTION	SHEET NO.

Filename: FD_MSH_ARC_0027_0059_A-121.dgn

THE INFORMATION, INCLUDING ESTIMATED QUANTITIES OF WORK, SHOWN ON THESE SHEETS IS BASED ON LIMITED INVESTIGATIONS BY THE STATE AND IS IN NO WAY WARRANTED TO INDICATE THE CONDITIONS OF ACTUAL QUANTITIES OF WORK WHICH WILL BE REQUIRED.

Date Plotted: October 01, 2014

DESIGNER/DRAFTER: D. Tudryn / R. Wright

CHECKED BY: D. TUDRYN

SCALE AS NOTED

STATE OF CONNECTICUT
DEPARTMENT OF TRANSPORTATION

ENGINEER: BAKER ENGINEERING

APPROVED BY:

DATE:

PROJECT TITLE:

SHORE LINE EAST RAILROAD STATIONS

TOWN: **CLINTON**

DRAWING TITLE: **ROOF PLAN - 2**

PROJECT NO. **310-0059**

DRAWING NO. **A-121**

SHEET NO. **04.08**

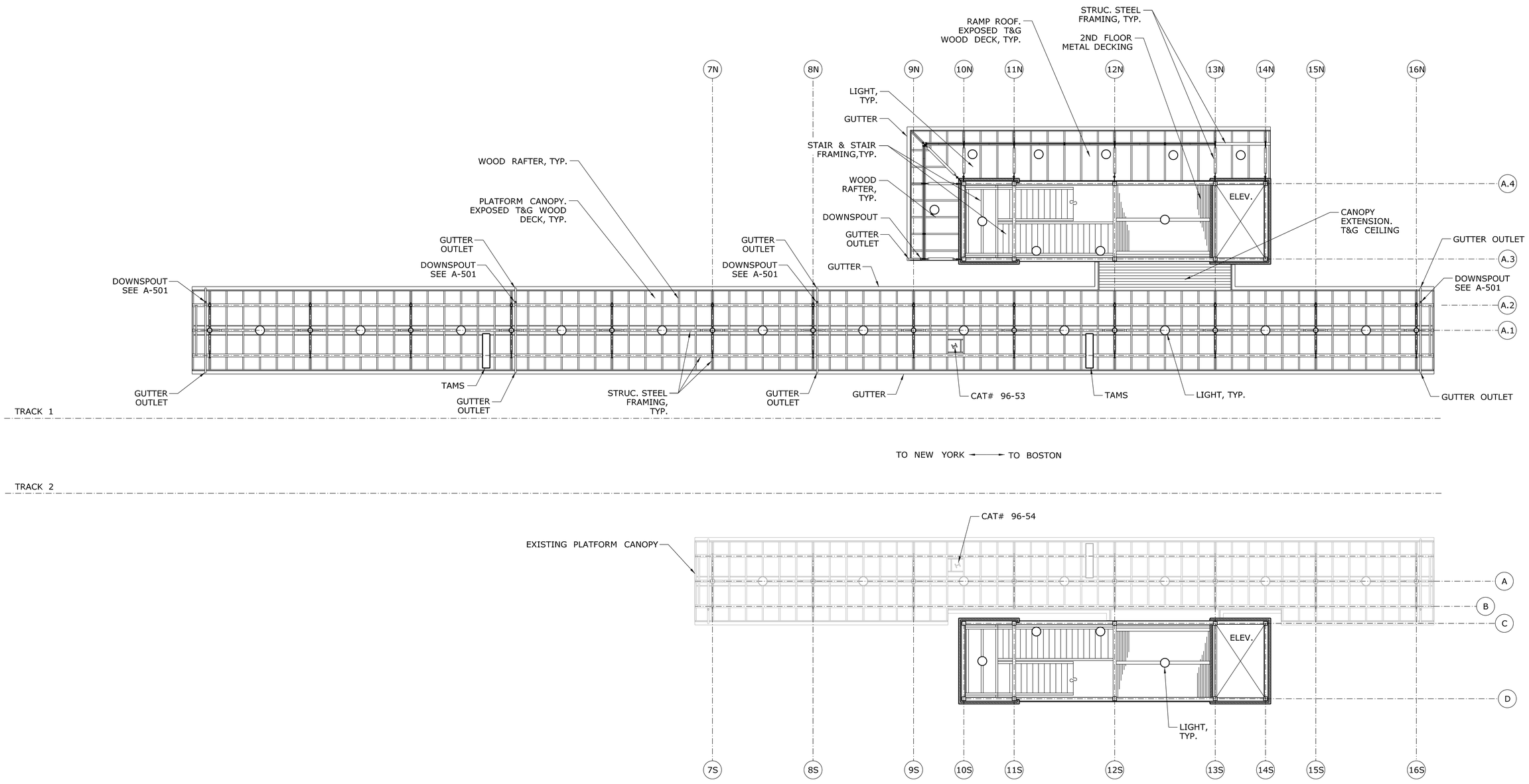

N

PLATFORM LEVEL REFLECTED CEILING PLAN

SCALE: 1/8"=1'-0"

REV.	DATE	REVISION DESCRIPTION	SHEET NO.

Filename: FD_MSH_ARC_0027_0059_A-122.dgn

THE INFORMATION, INCLUDING ESTIMATED QUANTITIES OF WORK, SHOWN ON THESE SHEETS IS BASED ON LIMITED INVESTIGATIONS BY THE STATE AND IS IN NO WAY WARRANTED TO INDICATE THE CONDITIONS OF ACTUAL QUANTITIES OF WORK WHICH WILL BE REQUIRED.

Date Plotted: October 01, 2014

DESIGNER/DRAFTER: D. Tudryn / R. Wright

CHECKED BY: D. TUDRYN

SCALE AS NOTED

STATE OF CONNECTICUT
DEPARTMENT OF TRANSPORTATION

ENGINEER: BAKER ENGINEERING

APPROVED BY:

DATE:

PROJECT TITLE:

SHORE LINE EAST RAILROAD STATIONS

TOWN: **CLINTON**

DRAWING TITLE: **REFLECTED CEILING PLAN - 1**

PROJECT NO. **310-0059**

DRAWING NO. **A-122**

SHEET NO. **04.09**

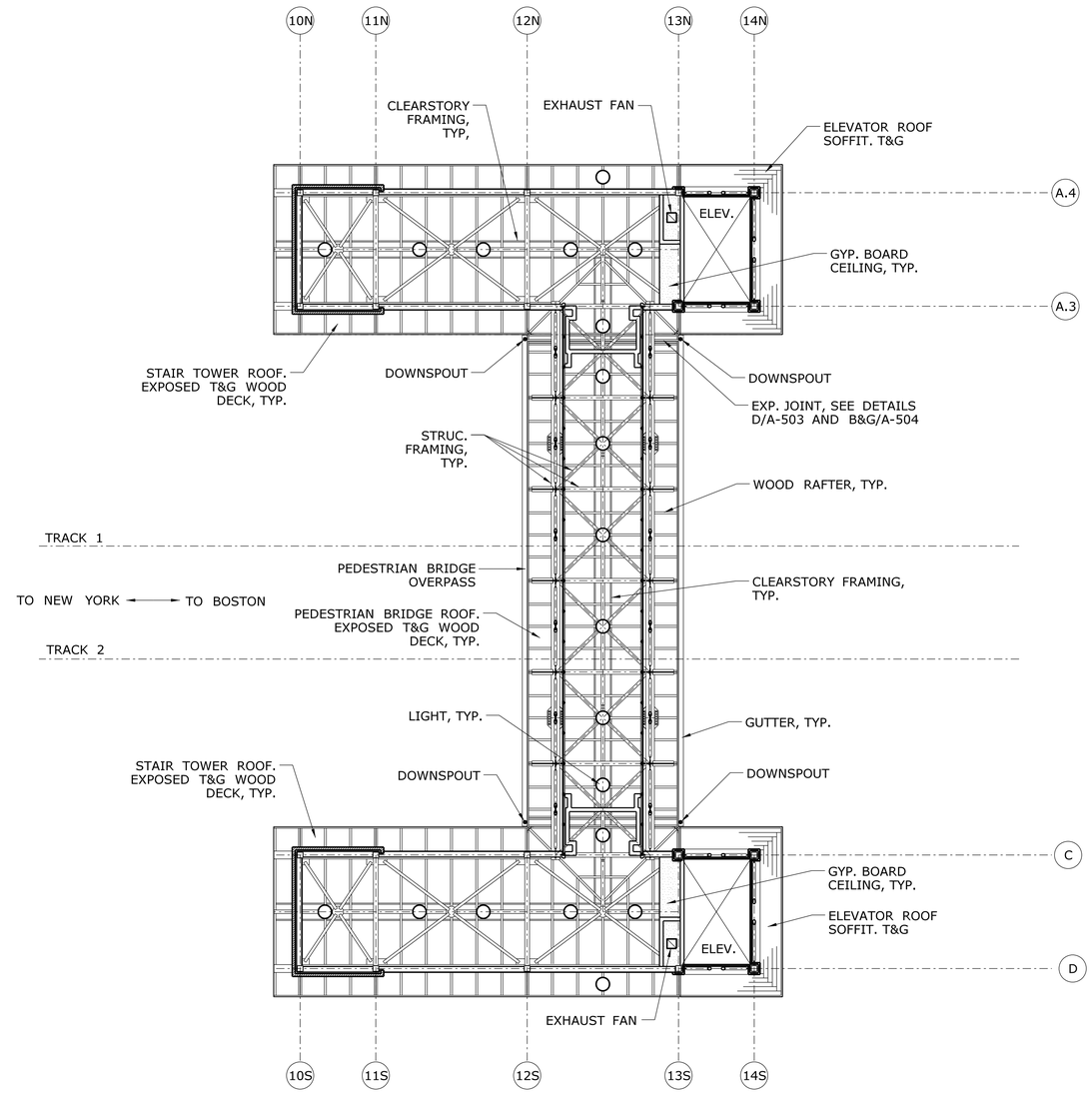

N

BRIDGE LEVEL REFLECTED CEILING PLAN

SCALE: 1/8"=1'-0"

REV.	DATE	REVISION DESCRIPTION	SHEET NO.

Filename: FD_MSH_ARC_0027_0059_A-123.dgn

THE INFORMATION, INCLUDING ESTIMATED QUANTITIES OF WORK, SHOWN ON THESE SHEETS IS BASED ON LIMITED INVESTIGATIONS BY THE STATE AND IS IN NO WAY WARRANTED TO INDICATE THE CONDITIONS OF ACTUAL QUANTITIES OF WORK WHICH WILL BE REQUIRED.

Date Plotted: October 01, 2014

DESIGNER/DRAFTER: D. Tudryn / R. Wright

CHECKED BY: D. TUDRYN

SCALE AS NOTED

STATE OF CONNECTICUT
DEPARTMENT OF TRANSPORTATION

ENGINEER: BAKER ENGINEERING

APPROVED BY:

DATE:

PROJECT TITLE:

SHORE LINE EAST RAILROAD STATIONS

TOWN: **CLINTON**

DRAWING TITLE: **REFLECTED CEILING PLAN - 2**

PROJECT NO. **310-0059**

DRAWING NO. **A-123**

SHEET NO. **04.10**

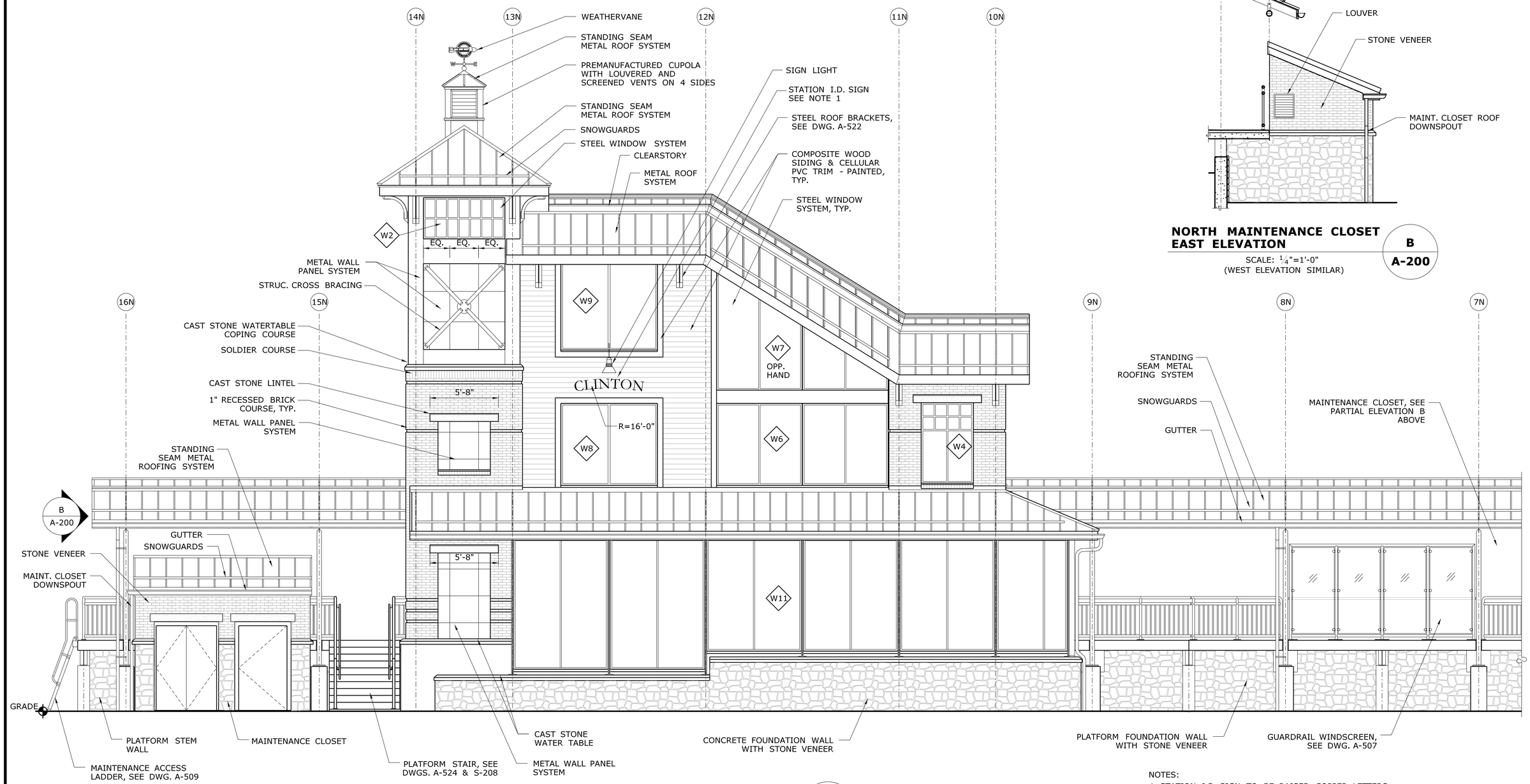

NORTH ELEVATION — **A** / **A-100**

SCALE: 1/4"=1'-0"

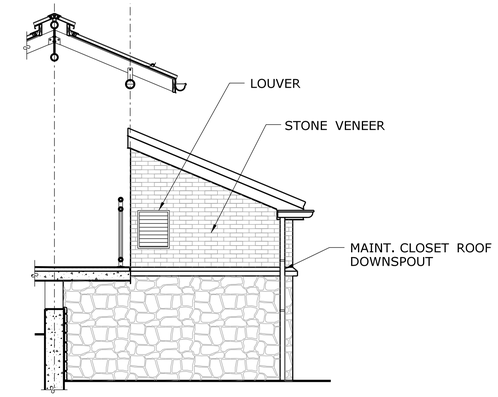

NORTH MAINTENANCE CLOSET EAST ELEVATION — **B** / **A-200**

SCALE: 1/4"=1'-0"
(WEST ELEVATION SIMILAR)

NOTES:

1. STATION I.D. SIGN TO BE RAISED COPPER LETTERS "GARAMOND" FONT, TEXT HT.=14", TEXT WT.=14" LETTER THICKNESS =3/8". SET LETTERS AWAY FROM SIDING WITH STAINLESS STEEL PACERS AND STUDS.

REV.	DATE	REVISION DESCRIPTION	SHEET NO.

Filename: FD_MSH_ARC_0027_0059_A-200.dgn

THE INFORMATION, INCLUDING ESTIMATED QUANTITIES OF WORK, SHOWN ON THESE SHEETS IS BASED ON LIMITED INVESTIGATIONS BY THE STATE AND IS IN NO WAY WARRANTED TO INDICATE THE CONDITIONS OF ACTUAL QUANTITIES OF WORK WHICH WILL BE REQUIRED.

Date Plotted: October 01, 2014

DESIGNER/DRAFTER: D. TUDRYN / R. WRIGHT
CHECKED BY: D. TUDRYN
SCALE AS NOTED

STATE OF CONNECTICUT
DEPARTMENT OF TRANSPORTATION

ENGINEER: BAKER ENGINEERING
APPROVED BY:
DATE:

PROJECT TITLE:
SHORE LINE EAST RAILROAD STATIONS

TOWN: **CLINTON**

DRAWING TITLE: **NORTH ELEVATION**

PROJECT NO. **310-0059**
DRAWING NO. **A-200**
SHEET NO. **04.11**

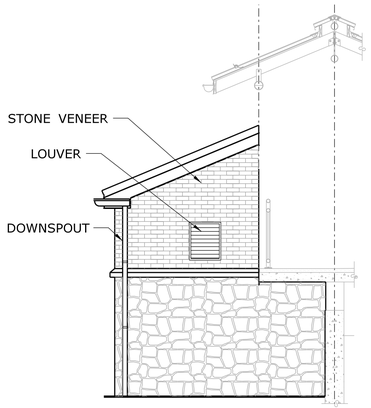

EAST ELEVATION- MAINT. CLOSET — A / A-201

SCALE: 1/4"=1'-0"

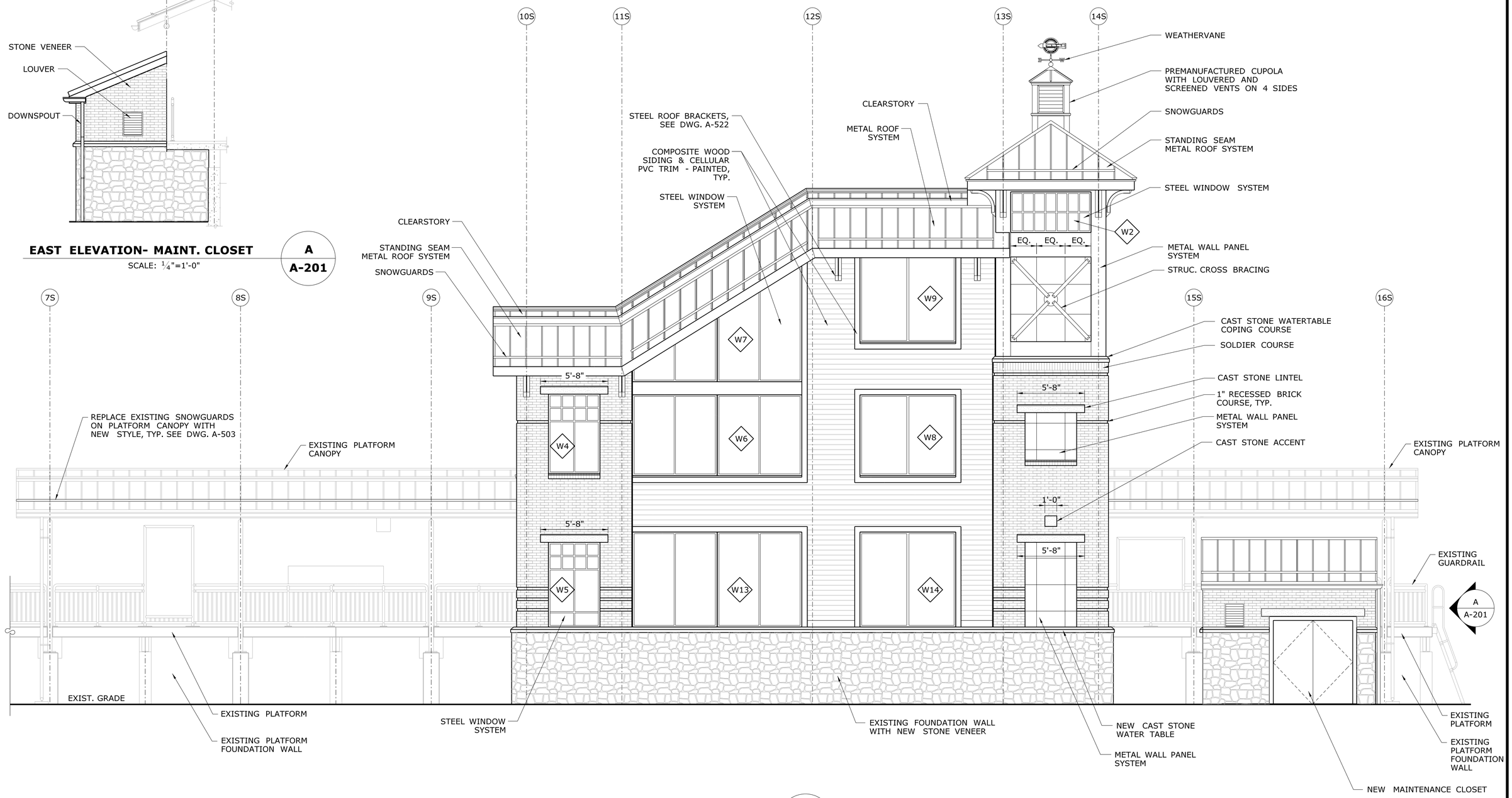

SOUTH ELEVATION - STAIR TOWER — B / A-100

SCALE: 1/4"=1'-0"

REV.	DATE	REVISION DESCRIPTION	SHEET NO.

Filename: FD_MSH_ARC_0027_0059_A-201.dgn

THE INFORMATION, INCLUDING ESTIMATED QUANTITIES OF WORK, SHOWN ON THESE SHEETS IS BASED ON LIMITED INVESTIGATIONS BY THE STATE AND IS IN NO WAY WARRANTED TO INDICATE THE CONDITIONS OF ACTUAL QUANTITIES OF WORK WHICH WILL BE REQUIRED.

Date Plotted: October 01, 2014

DESIGNER/DRAFTER: D. TUDRYN / R. WRIGHT

CHECKED BY: D. TUDRYN

SCALE AS NOTED

STATE OF CONNECTICUT
DEPARTMENT OF TRANSPORTATION

ENGINEER: BAKER ENGINEERING

APPROVED BY: DATE:

PROJECT TITLE:

SHORE LINE EAST RAILROAD STATIONS

TOWN: **CLINTON**

DRAWING TITLE: **SOUTH ELEVATION**

PROJECT NO. **310-0059**

DRAWING NO. **A-201**

SHEET NO. **04.12**

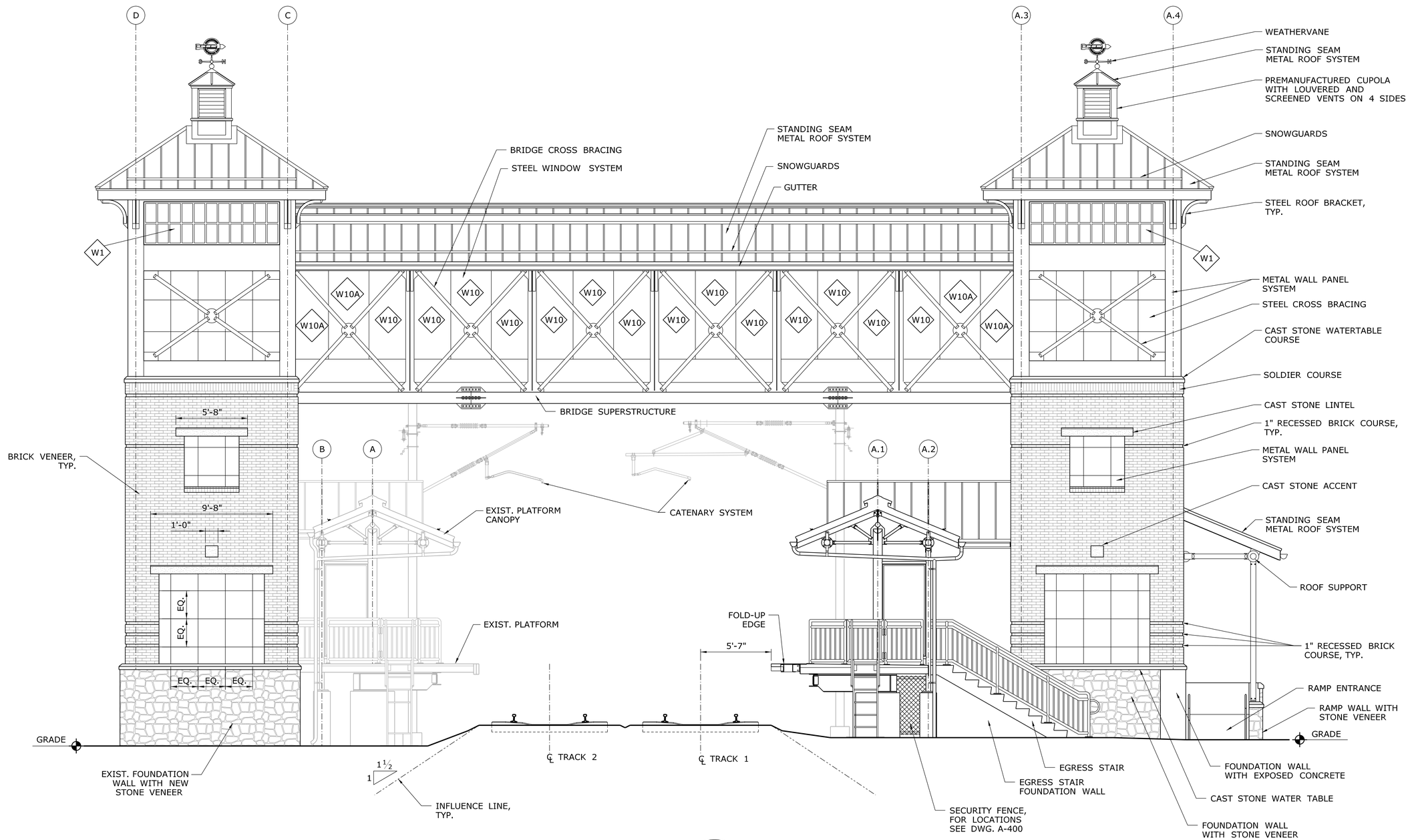

EAST ELEVATION — C / A-100

SCALE: 1/4"=1'-0"

NOTE: MAINTENANCE CLOSETS NOT SHOWN FOR CLARITY.
FOR MAINT. CLOSET EAST ELEVATIONS SEE A-201

REV.	DATE	REVISION DESCRIPTION	SHEET NO.

Filename: FD_MSH_ARC_0027_0059_A-204.dgn

THE INFORMATION, INCLUDING ESTIMATED QUANTITIES OF WORK, SHOWN ON THESE SHEETS IS BASED ON LIMITED INVESTIGATIONS BY THE STATE AND IS IN NO WAY WARRANTED TO INDICATE THE CONDITIONS OF ACTUAL QUANTITIES OF WORK WHICH WILL BE REQUIRED.

Date Plotted: October 01, 2014

DESIGNER/DRAFTER: D. TUDRYN / R. WRIGHT
CHECKED BY: D. TUDRYN
SCALE AS NOTED

STATE OF CONNECTICUT
DEPARTMENT OF TRANSPORTATION

ENGINEER: BAKER ENGINEERING
APPROVED BY:
DATE:

STATE OF CONNECTICUT — DAVID L. TUDRYN — No. 19079 — LICENSED PROFESSIONAL ENGINEER

PROJECT TITLE: **SHORE LINE EAST RAILROAD STATIONS**

TOWN: **CLINTON**

DRAWING TITLE: **EAST ELEVATION**

PROJECT NO. **310-0059**
DRAWING NO. **A-202**
SHEET NO. **04.13**

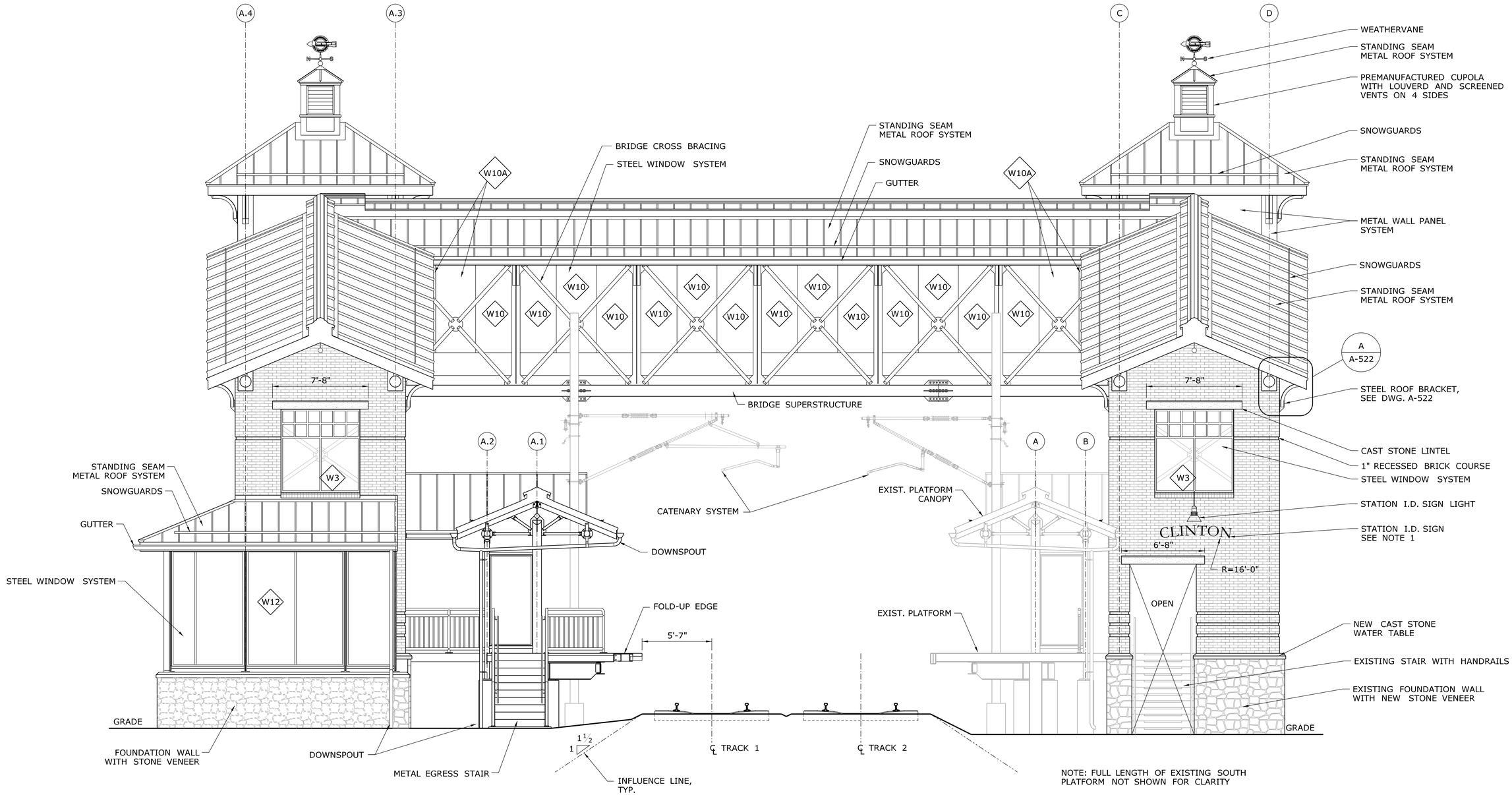

WEST ELEVATION — D / A-100

SCALE: 1/4"=1'-0"

NOTES:

1. STATION I.D. SIGN TO BE RAISED COPPER LETTERS "GARAMOND" FONT, TEXT HT.=14", TEXT WT.=14" LETTER THICKNESS =3/8". SET LETTERS AWAY FROM SIDING WITH STAINLESS STEEL PACERS AND STUDS.

REV.	DATE	REVISION DESCRIPTION	SHEET NO.

Filename: FD_MSH_ARC_0027_0059_A-203.dgn

THE INFORMATION, INCLUDING ESTIMATED QUANTITIES OF WORK, SHOWN ON THESE SHEETS IS BASED ON LIMITED INVESTIGATIONS BY THE STATE AND IS IN NO WAY WARRANTED TO INDICATE THE CONDITIONS OF ACTUAL QUANTITIES OF WORK WHICH WILL BE REQUIRED.

Date Plotted: October 01, 2014

DESIGNER/DRAFTER: D. TUDRYN / R. WRIGHT

CHECKED BY: D. TUDRYN

SCALE AS NOTED

STATE OF CONNECTICUT
DEPARTMENT OF TRANSPORTATION

ENGINEER: BAKER ENGINEERING

APPROVED BY:

DATE:

PROJECT TITLE:

SHORE LINE EAST RAILROAD STATIONS

TOWN: **CLINTON**

DRAWING TITLE: **WEST ELEVATION**

PROJECT NO. **310-0059**

DRAWING NO. **A-203**

SHEET NO. **04.14**

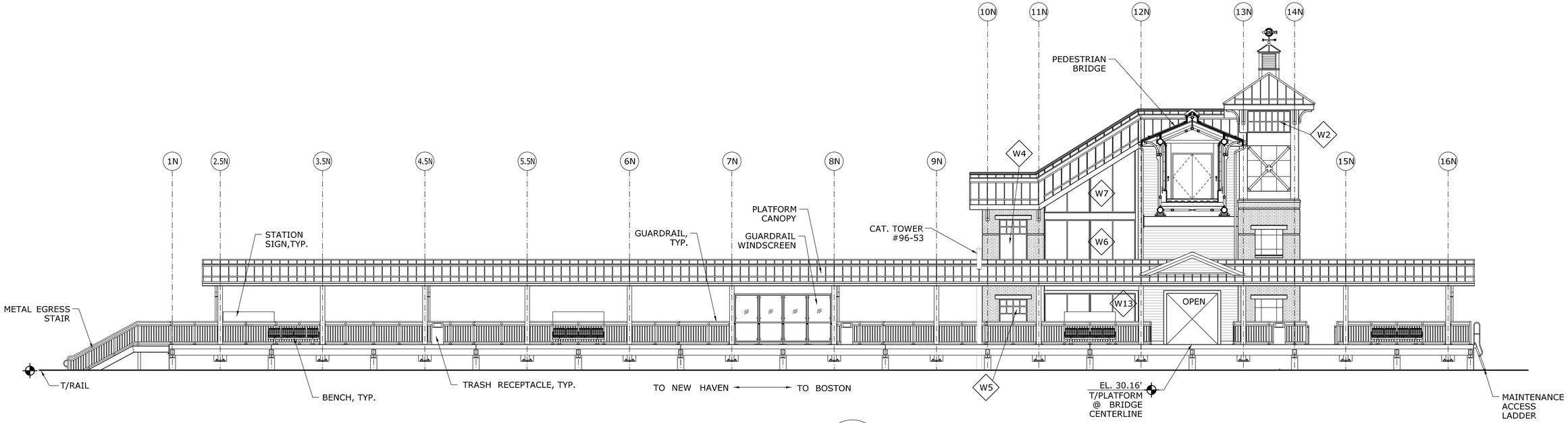

NORTH PLATFORM — E / A-100

SCALE: 1/8"=1'-0"

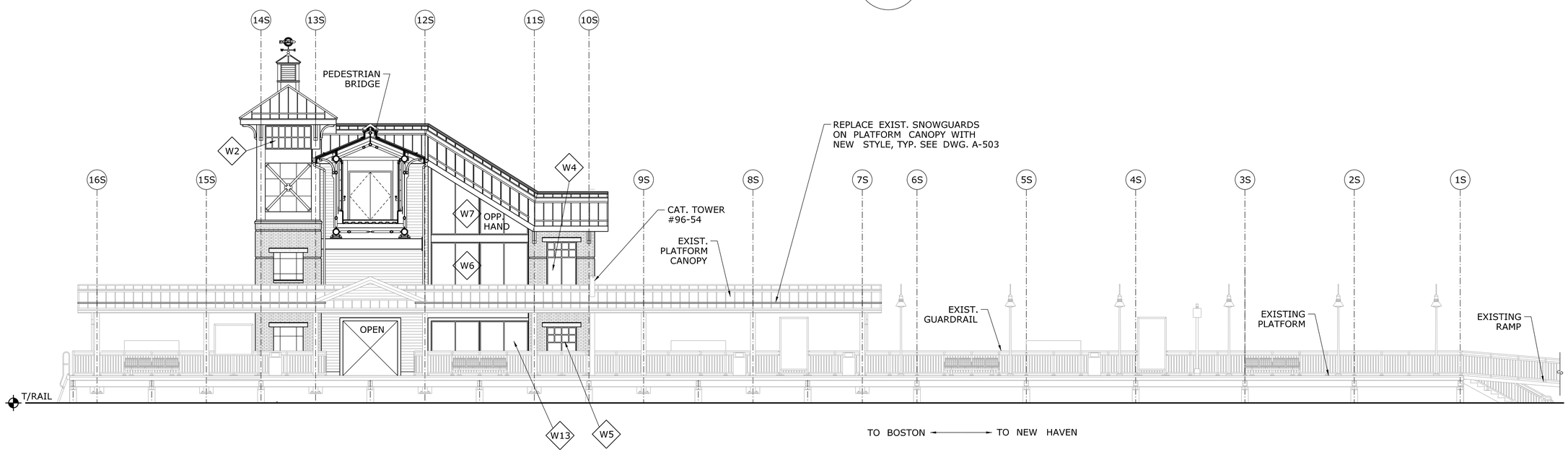

SOUTH PLATFORM — F / A-100

SCALE: 1/8"=1'-0"

REV.	DATE	REVISION DESCRIPTION	SHEET NO.

Filename: FD_MSH_ARC_0027_0059_A-204.dgn

THE INFORMATION, INCLUDING ESTIMATED QUANTITIES OF WORK, SHOWN ON THESE SHEETS IS BASED ON LIMITED INVESTIGATIONS BY THE STATE AND IS IN NO WAY WARRANTED TO INDICATE THE CONDITIONS OF ACTUAL QUANTITIES OF WORK WHICH WILL BE REQUIRED.

Date Plotted: October 01, 2014

DESIGNER/DRAFTER: D. TUDRYN / R. WRIGHT

CHECKED BY: D. TUDRYN

SCALE AS NOTED

STATE OF CONNECTICUT
DEPARTMENT OF TRANSPORTATION

ENGINEER: BAKER ENGINEERING

APPROVED BY: DATE:

PROJECT TITLE:

SHORE LINE EAST RAILROAD STATIONS

TOWN: **CLINTON**

DRAWING TITLE: **PLATFORM ELEVATIONS**

PROJECT NO. **310-0059**

DRAWING NO. **A-204**

SHEET NO. **04.15**

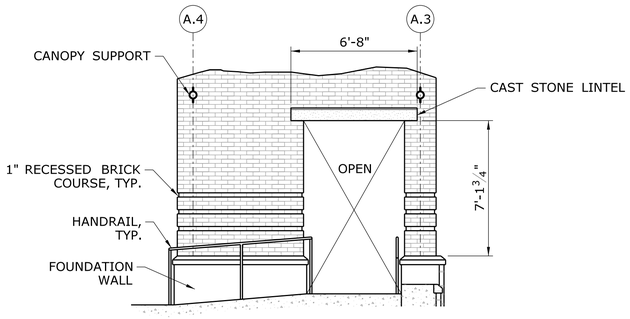

PARTIAL WEST INTERIOR ELEVATION
NORTH STAIR TOWER

SCALE: 1/4"=1'-0"

1
A-400

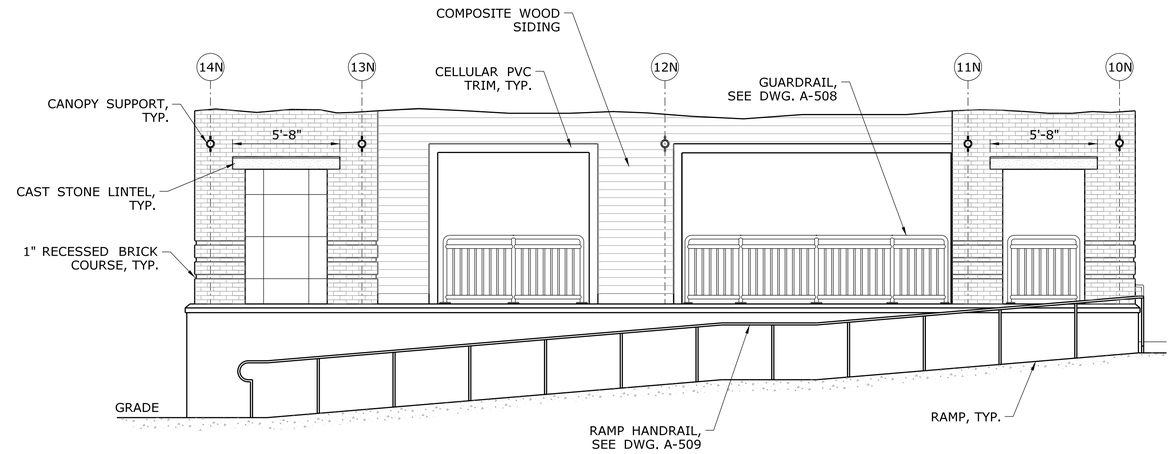

PARTIAL NORTH INTERIOR ELEVATION
NORTH STAIR TOWER

SCALE: 1/4"=1'-0"

2
A-400

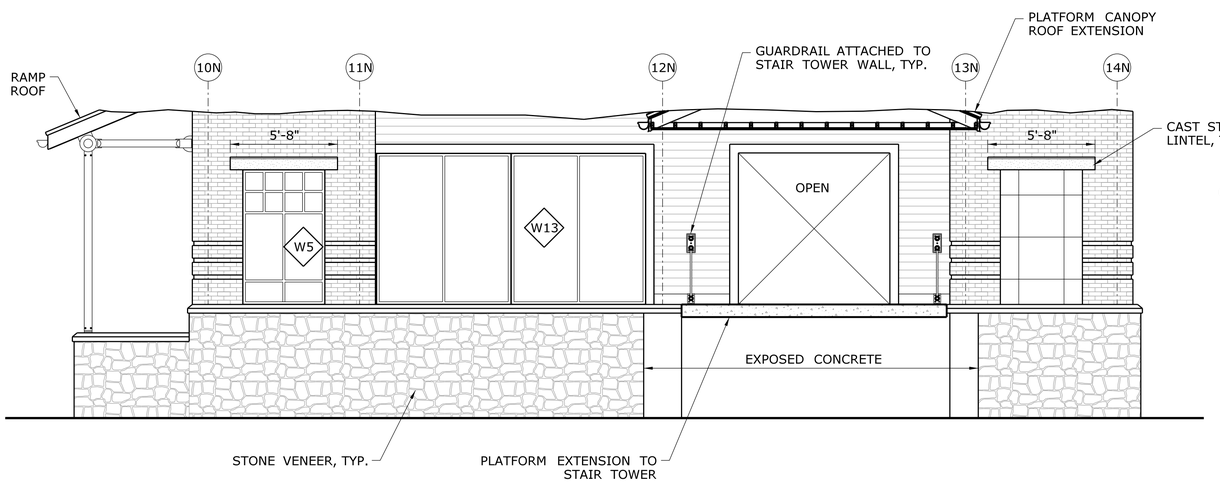

PARTIAL NORTH STAIR TOWER ELEVATION
LOOKING NORTH

SCALE: 1/4"=1'-0"

A
A-400

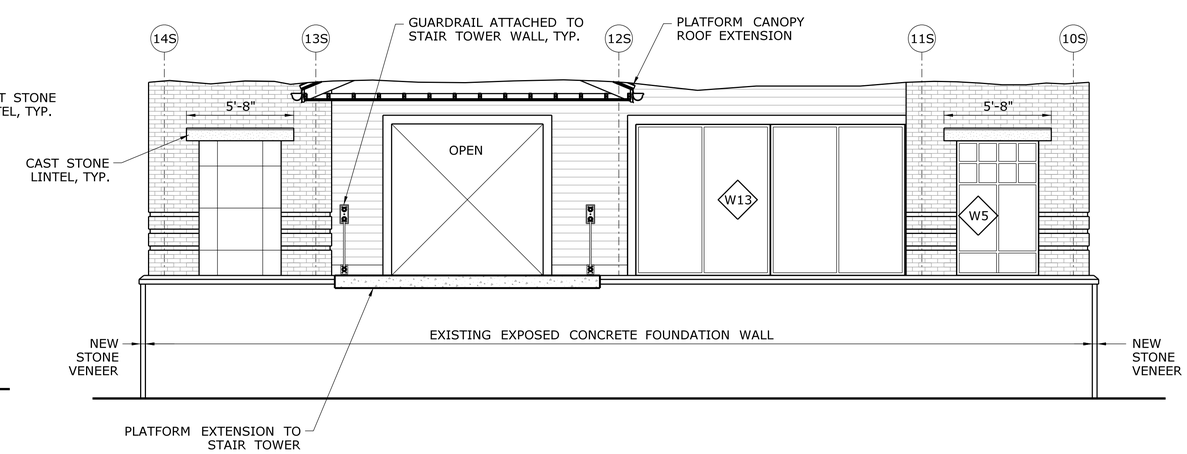

PARTIAL SOUTH STAIR TOWER ELEVATION
LOOKING SOUTH

SCALE: 1/4"=1'-0"

B
A-401

REV.	DATE	REVISION DESCRIPTION	SHEET NO.

Filename: FD..MSH..ARC..0027..0059..A-205.dgn

THE INFORMATION, INCLUDING ESTIMATED QUANTITIES OF WORK, SHOWN ON THESE SHEETS IS BASED ON LIMITED INVESTIGATIONS BY THE STATE AND IS IN NO WAY WARRANTED TO INDICATE THE CONDITIONS OF ACTUAL QUANTITIES OF WORK WHICH WILL BE REQUIRED.

Date Plotted: October 01, 2014

DESIGNER/DRAFTER: D. TUDRYN / R. WRIGHT
CHECKED BY: D. TUDRYN
SCALE AS NOTED

STATE OF CONNECTICUT
DEPARTMENT OF TRANSPORTATION

ENGINEER: BAKER ENGINEERING
APPROVED BY:
DATE:

PROJECT TITLE:
SHORE LINE EAST RAILROAD STATIONS

TOWN: **CLINTON**

DRAWING TITLE: **INTERIOR ELEVATIONS**

PROJECT NO. **310-0059**
DRAWING NO. **A-205**
SHEET NO. **04.16**

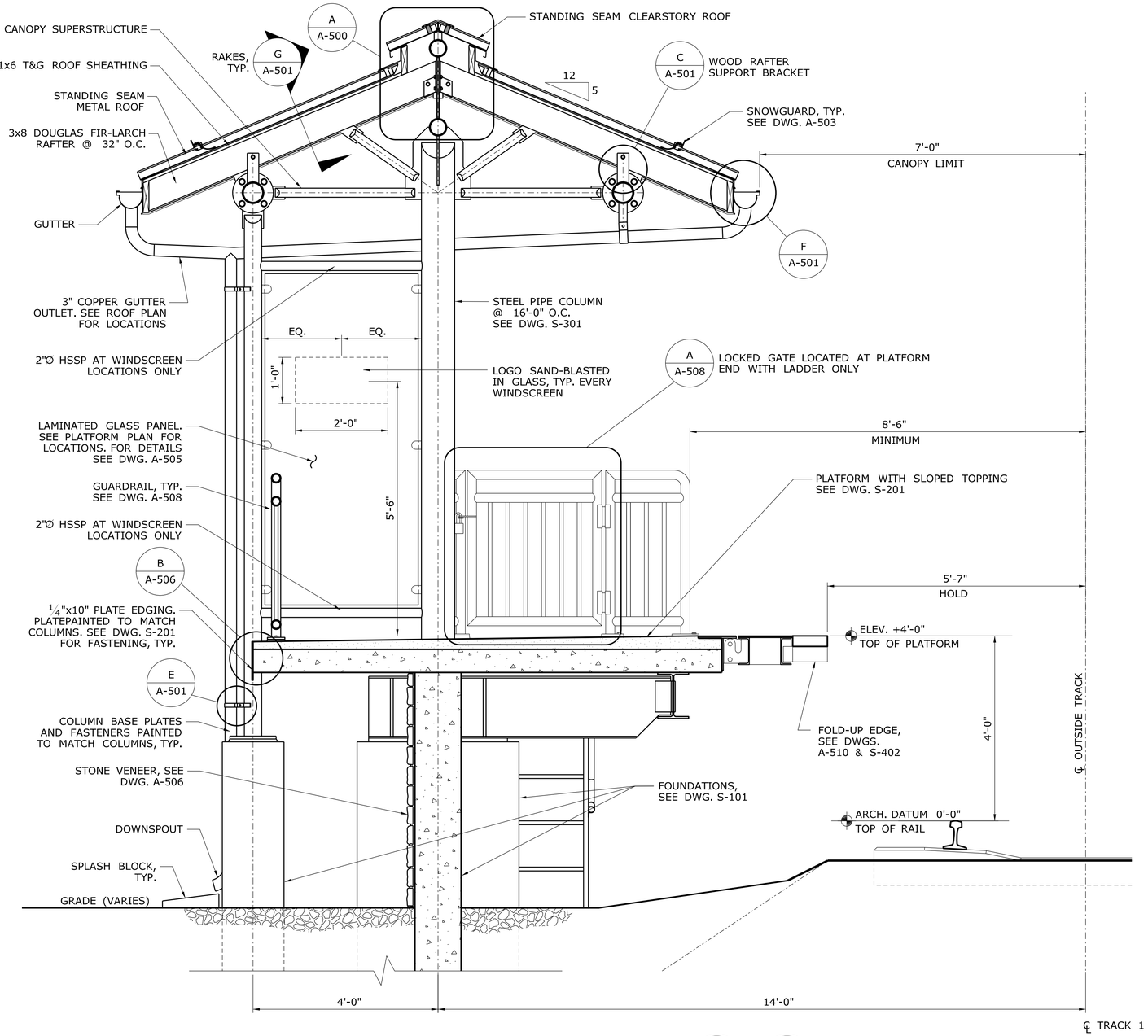

PLATFORM/CANOPY SECTION A A-100 / A A-120

SCALE: 3/4"=1'-0"

WARNING: CONSTRUCTION OF THE STATION PLATFORM AND CANOPY REQUIRES WORK IN CLOSE PROXIMITY TO AMTRAK HIGH VOLTAGE WIRES. THE EXACT LOCATION OF THESE WIRES ARE SHOWN ON SHEETS ET-6 AND ET-7. REFER TO 'NOTICE TO CONTRACTOR - WORK ON RAILROAD PROPERTY' FOR RULES REGUARDING WORK ON AMTRAK PROPERTY.

REV.	DATE	REVISION DESCRIPTION	SHEET NO.

Filename: FD_MSH_ARC_0014_0056_A-300.dgn

THE INFORMATION, INCLUDING ESTIMATED QUANTITIES OF WORK, SHOWN ON THESE SHEETS IS BASED ON LIMITED INVESTIGATIONS BY THE STATE AND IS IN NO WAY WARRANTED TO INDICATE THE CONDITIONS OF ACTUAL QUANTITIES OF WORK WHICH WILL BE REQUIRED.

Date Plotted: October 01, 2014

DESIGNER/DRAFTER: D. TUDRYN / R. WRIGHT

CHECKED BY: D. TUDRYN

SCALE AS NOTED

STATE OF CONNECTICUT
DEPARTMENT OF TRANSPORTATION

ENGINEER: BAKER ENGINEERING

APPROVED BY:

DATE:

PROJECT TITLE: **SHORE LINE EAST RAILROAD STATIONS**

TOWN: **CLINTON**

DRAWING TITLE: **PLATFORM/CANOPY SECTION**

PROJECT NO. **310-0059**

DRAWING NO. **A-300**

SHEET NO. **04.17**

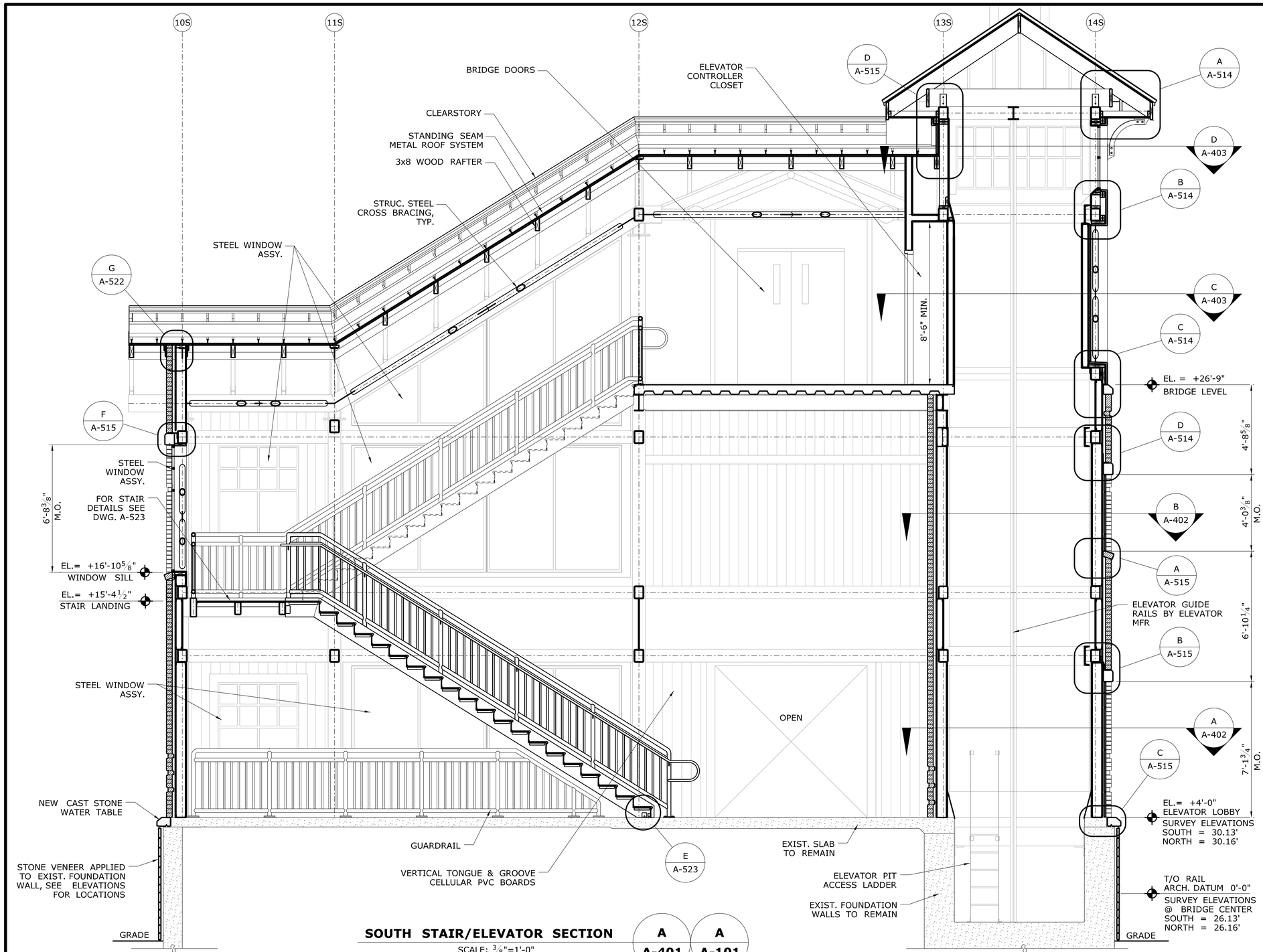

SOUTH STAIR/ELEVATOR SECTION — A A-401 / A A-101

SCALE: 3/8"=1'-0"

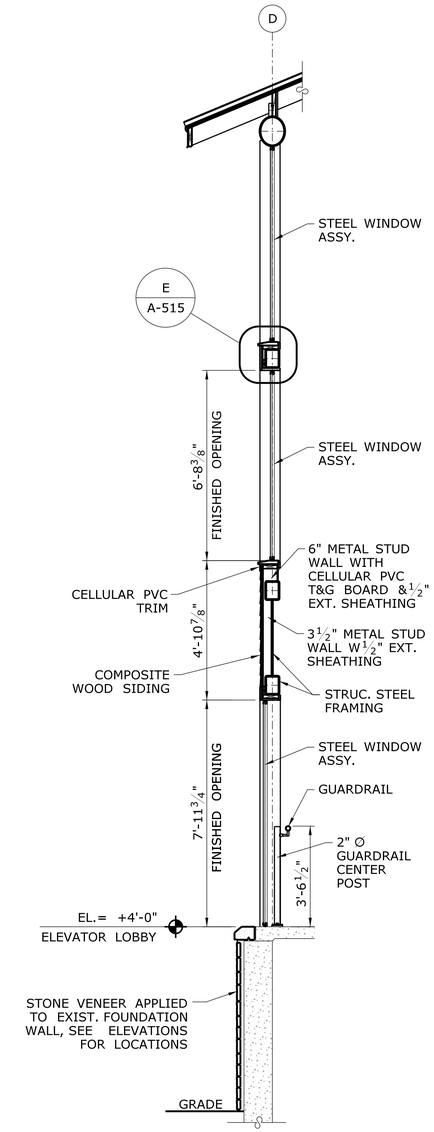

STAIR TOWER SECTION — B A-401

SCALE: 3/8"=1'-0"

REV.	DATE	REVISION DESCRIPTION	SHEET NO.

Filename: FD_MSH_ARC_0027_0059_A-301.dgn

THE INFORMATION, INCLUDING ESTIMATED QUANTITIES OF WORK, SHOWN ON THESE SHEETS IS BASED ON LIMITED INVESTIGATIONS BY THE STATE AND IS IN NO WAY WARRANTED TO INDICATE THE CONDITIONS OF ACTUAL QUANTITIES OF WORK WHICH WILL BE REQUIRED.

Date Plotted: October 01, 2014

DESIGNER/DRAFTER: D. TUDRYN / R. WRIGHT

CHECKED BY: D. TUDRYN

SCALE AS NOTED

STATE OF CONNECTICUT
DEPARTMENT OF TRANSPORTATION

ENGINEER: BAKER ENGINEERING

APPROVED BY:

DATE:

STATE OF CONNECTICUT — DAVID M. DELAHANTY — No. 19079 — LICENSED PROFESSIONAL ENGINEER

PROJECT TITLE:

SHORE LINE EAST RAILROAD STATIONS

TOWN: **CLINTON**

DRAWING TITLE: **STAIR TOWER SECTIONS - 1**

PROJECT NO. **310-0059**

DRAWING NO. **A-301**

SHEET NO. **04.18**

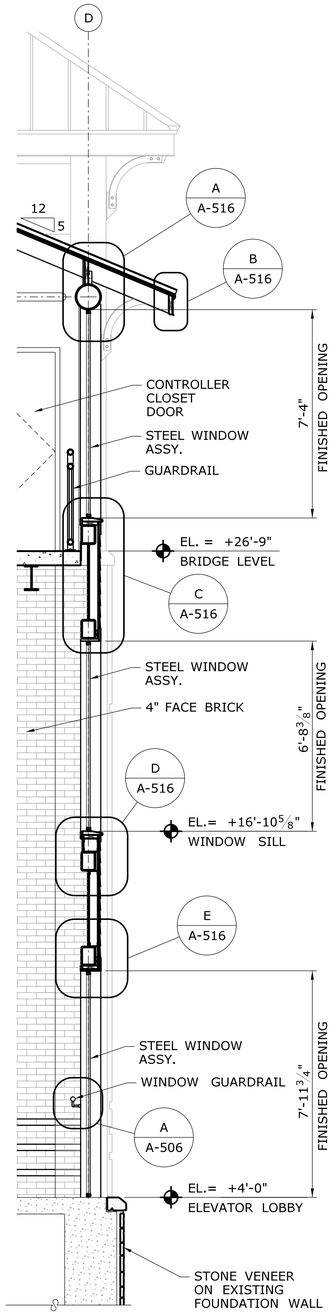

SOUTH STAIR TOWER SECTION C / A-401

SCALE: 3/8"=1'-0"

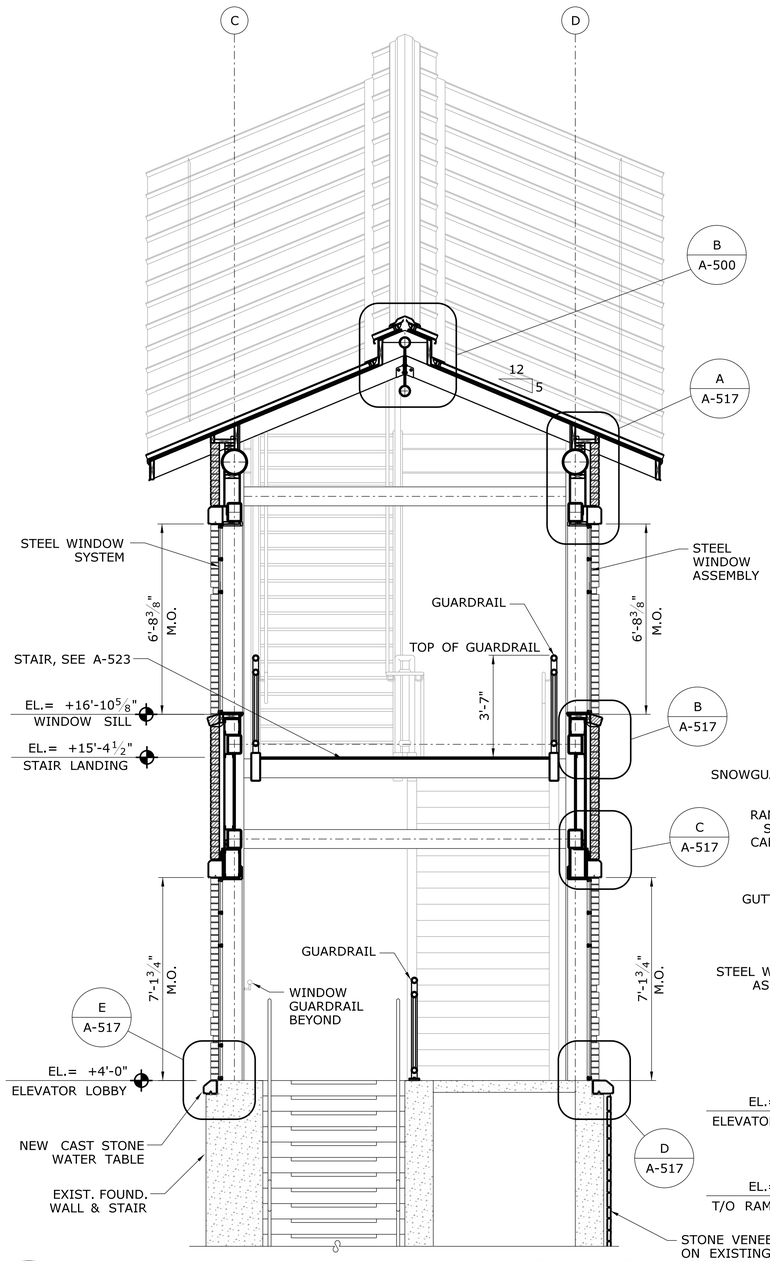

SOUTH STAIR TOWER SECTION D / A-401 | D / A-101

SCALE: 3/8"=1'-0"

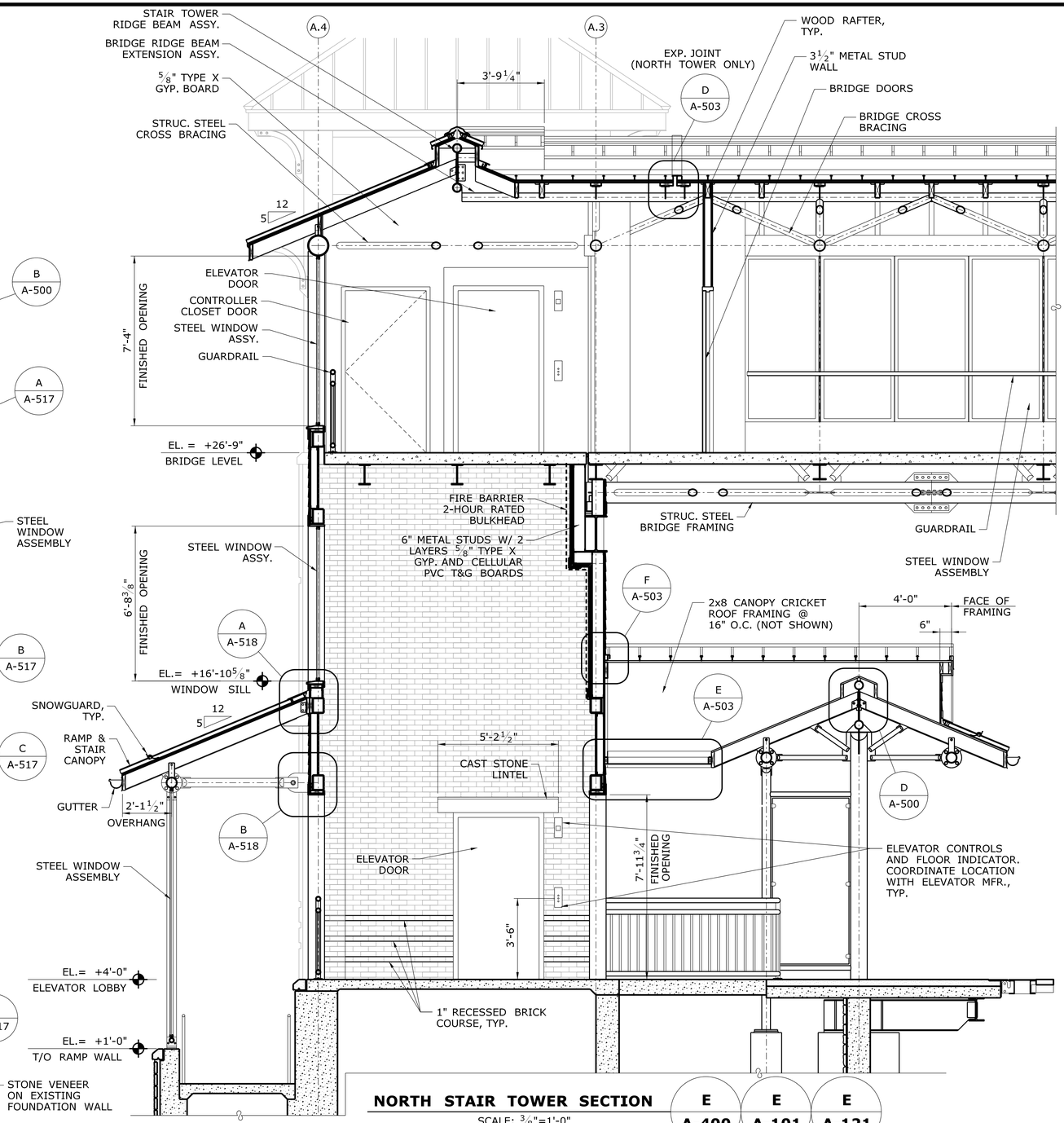

NORTH STAIR TOWER SECTION E / A-400 | E / A-101 | E / A-121

SCALE: 3/8"=1'-0"

REV.	DATE	REVISION DESCRIPTION	SHEET NO.

Filename: FD_MSH_ARC_0027_0059_A-302.dgn

THE INFORMATION, INCLUDING ESTIMATED QUANTITIES OF WORK, SHOWN ON THESE SHEETS IS BASED ON LIMITED INVESTIGATIONS BY THE STATE AND IS IN NO WAY WARRANTED TO INDICATE THE CONDITIONS OF ACTUAL QUANTITIES OF WORK WHICH WILL BE REQUIRED.

Date Plotted: October 01, 2014

DESIGNER/DRAFTER: D. TUDRYN / R. WRIGHT

CHECKED BY: D. TUDRYN

SCALE AS NOTED

STATE OF CONNECTICUT
DEPARTMENT OF TRANSPORTATION

ENGINEER: BAKER ENGINEERING

APPROVED BY:

DATE:

PROJECT TITLE: **SHORE LINE EAST RAILROAD STATIONS**

TOWN: **CLINTON**

DRAWING TITLE: **STAIR TOWER SECTIONS - 2**

PROJECT NO. **310-0059**

DRAWING NO. **A-302**

SHEET NO. **04.19**

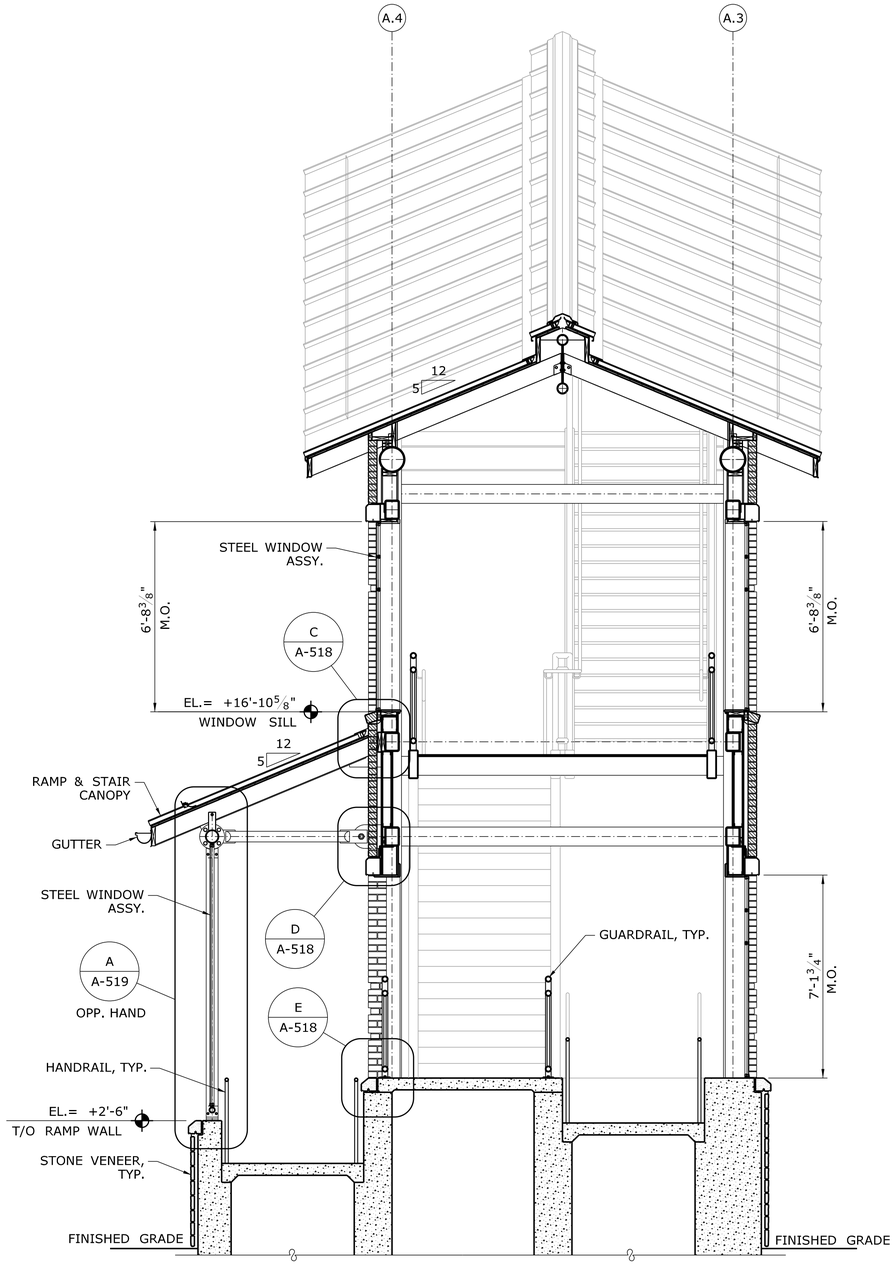

NORTH STAIR TOWER SECTION F / A-400 F / A-121

SCALE: 3/8"=1'-0"

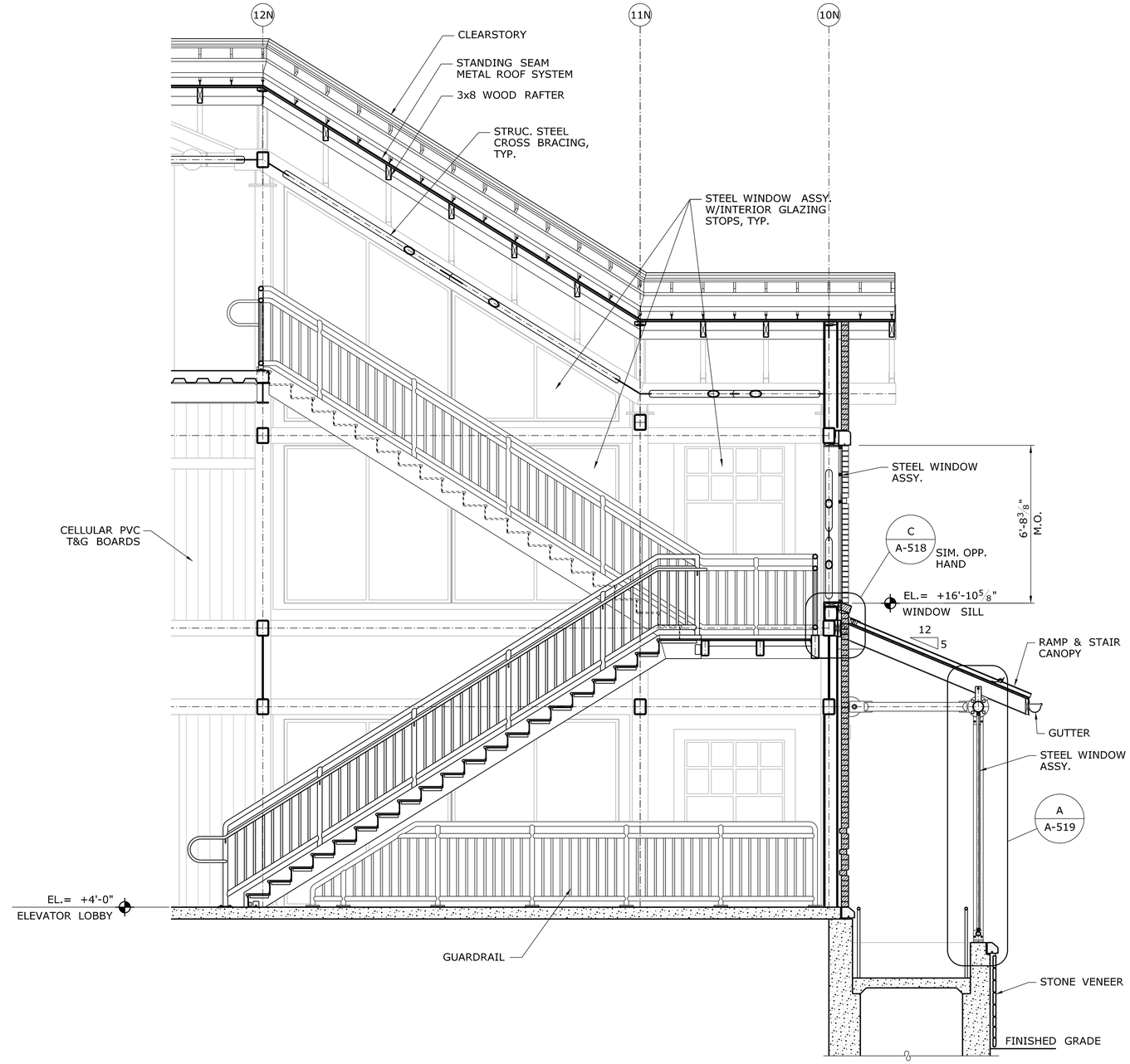

NORTH STAIR TOWER SECTION G / A-400

SCALE: 3/8"=1'-0"

REV.	DATE	REVISION DESCRIPTION	SHEET NO.

Filename: FD_MSH_ARC_0027_0059_A-303.dgn

THE INFORMATION, INCLUDING ESTIMATED QUANTITIES OF WORK, SHOWN ON THESE SHEETS IS BASED ON LIMITED INVESTIGATIONS BY THE STATE AND IS IN NO WAY WARRANTED TO INDICATE THE CONDITIONS OF ACTUAL QUANTITIES OF WORK WHICH WILL BE REQUIRED.

Date Plotted: October 01, 2014

DESIGNER/DRAFTER: D. TUDRYN / R. WRIGHT

CHECKED BY: D. TUDRYN

SCALE AS NOTED

STATE OF CONNECTICUT
DEPARTMENT OF TRANSPORTATION

ENGINEER: BAKER ENGINEERING

APPROVED BY:

DATE:

PROJECT TITLE:

SHORE LINE EAST RAILROAD STATIONS

TOWN: **CLINTON**

DRAWING TITLE: **STAIR TOWER SECTIONS - 3**

PROJECT NO. **310-0059**

DRAWING NO. **A-303**

SHEET NO. **04.20**

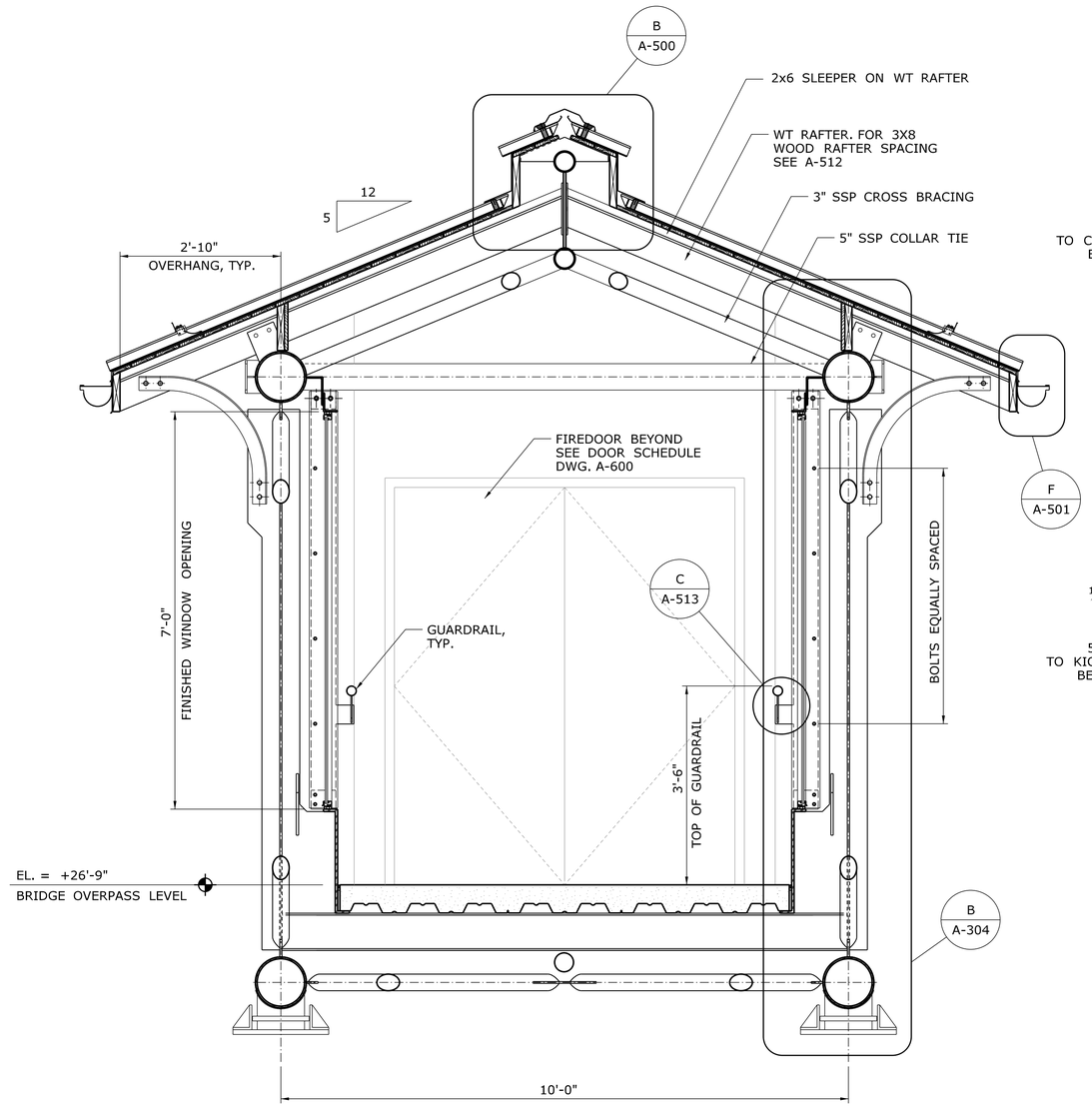

PEDESTRIAN BRIDGE SECTION — **A / A-101**

SCALE: $\frac{3}{4}$"=1'-0"

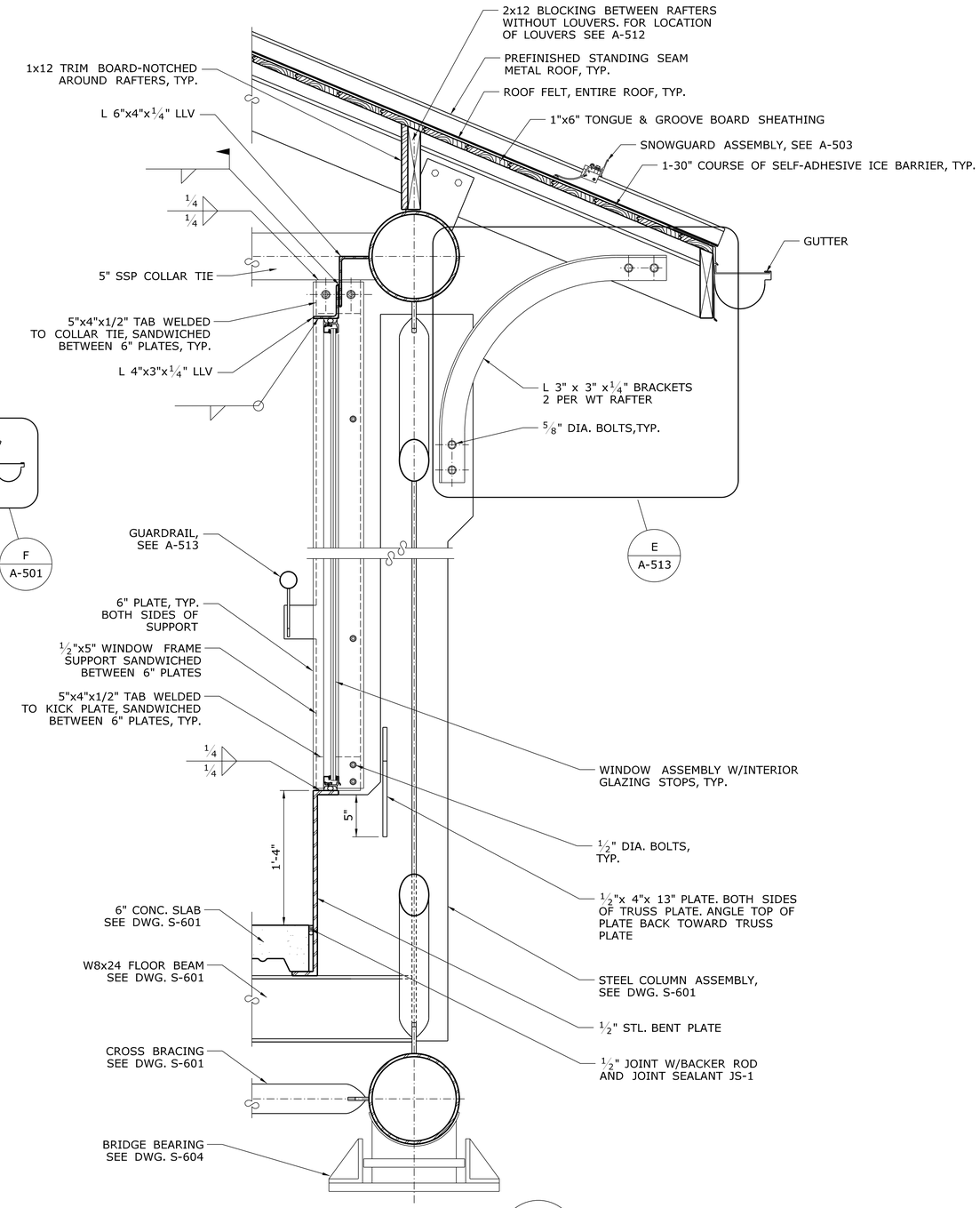

ENLARGED SECTION — **B / A-304**

SCALE: $1\frac{1}{2}$"=1'-0"

REV.	DATE	REVISION DESCRIPTION	SHEET NO.

Filename: FD_MSH_ARC_0027_0059_A-304.dgn

THE INFORMATION, INCLUDING ESTIMATED QUANTITIES OF WORK, SHOWN ON THESE SHEETS IS BASED ON LIMITED INVESTIGATIONS BY THE STATE AND IS IN NO WAY WARRANTED TO INDICATE THE CONDITIONS OF ACTUAL QUANTITIES OF WORK WHICH WILL BE REQUIRED.

Date Plotted: October 01, 2014

DESIGNER/DRAFTER: D. TUDRYN / R. WRIGHT

CHECKED BY: D. TUDRYN

SCALE AS NOTED

STATE OF CONNECTICUT
DEPARTMENT OF TRANSPORTATION

ENGINEER: BAKER ENGINEERING

APPROVED BY:

DATE:

PROJECT TITLE: **SHORE LINE EAST RAILROAD STATIONS**

TOWN: **CLINTON**

DRAWING TITLE: **PEDESTRIAN BRIDGE SECTIONS**

PROJECT NO. **310-0059**

DRAWING NO. **A-304**

SHEET NO. **04.21**

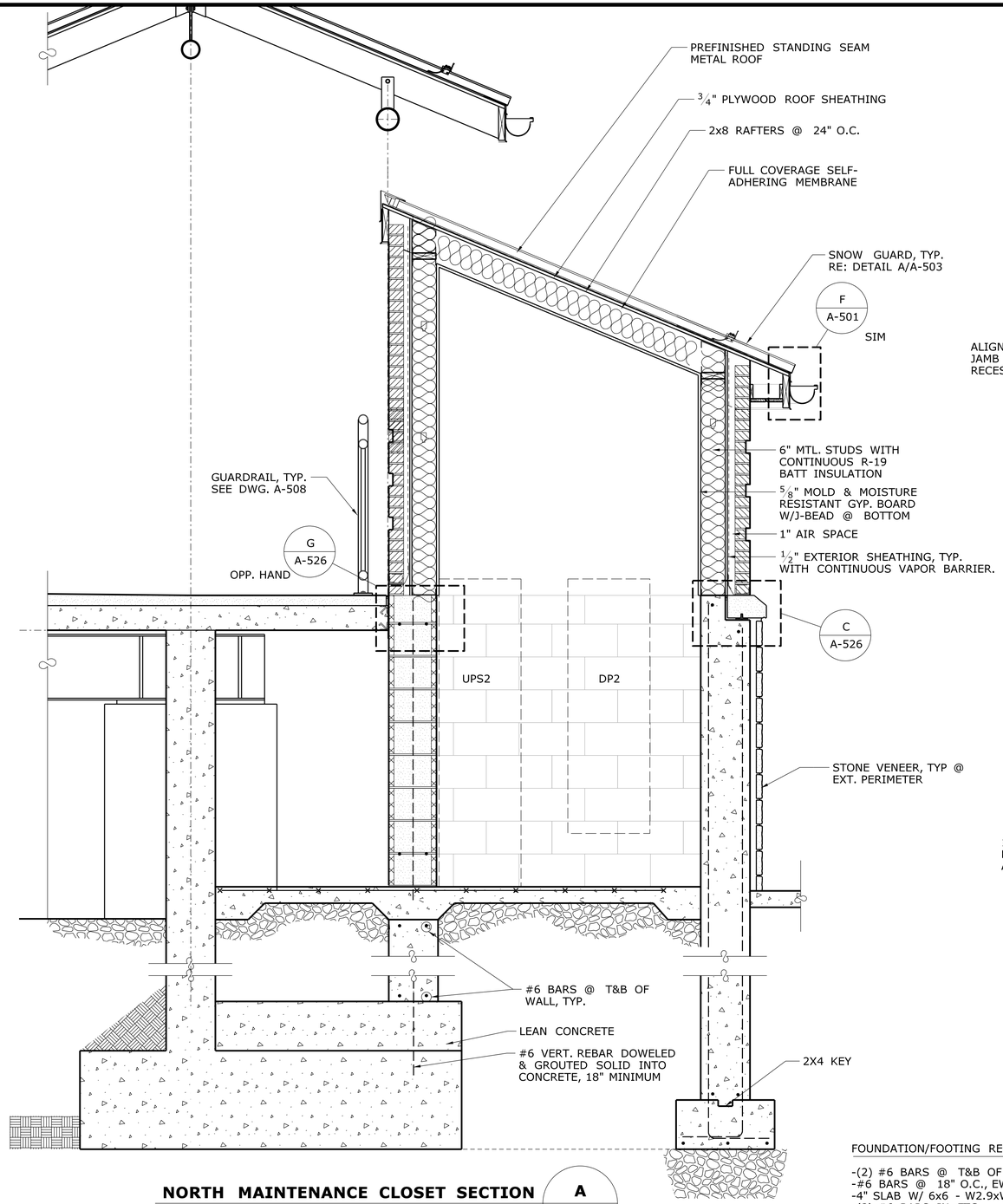

NORTH MAINTENANCE CLOSET SECTION **A** / **A-404**

SCALE: 3/4"=1'-0"

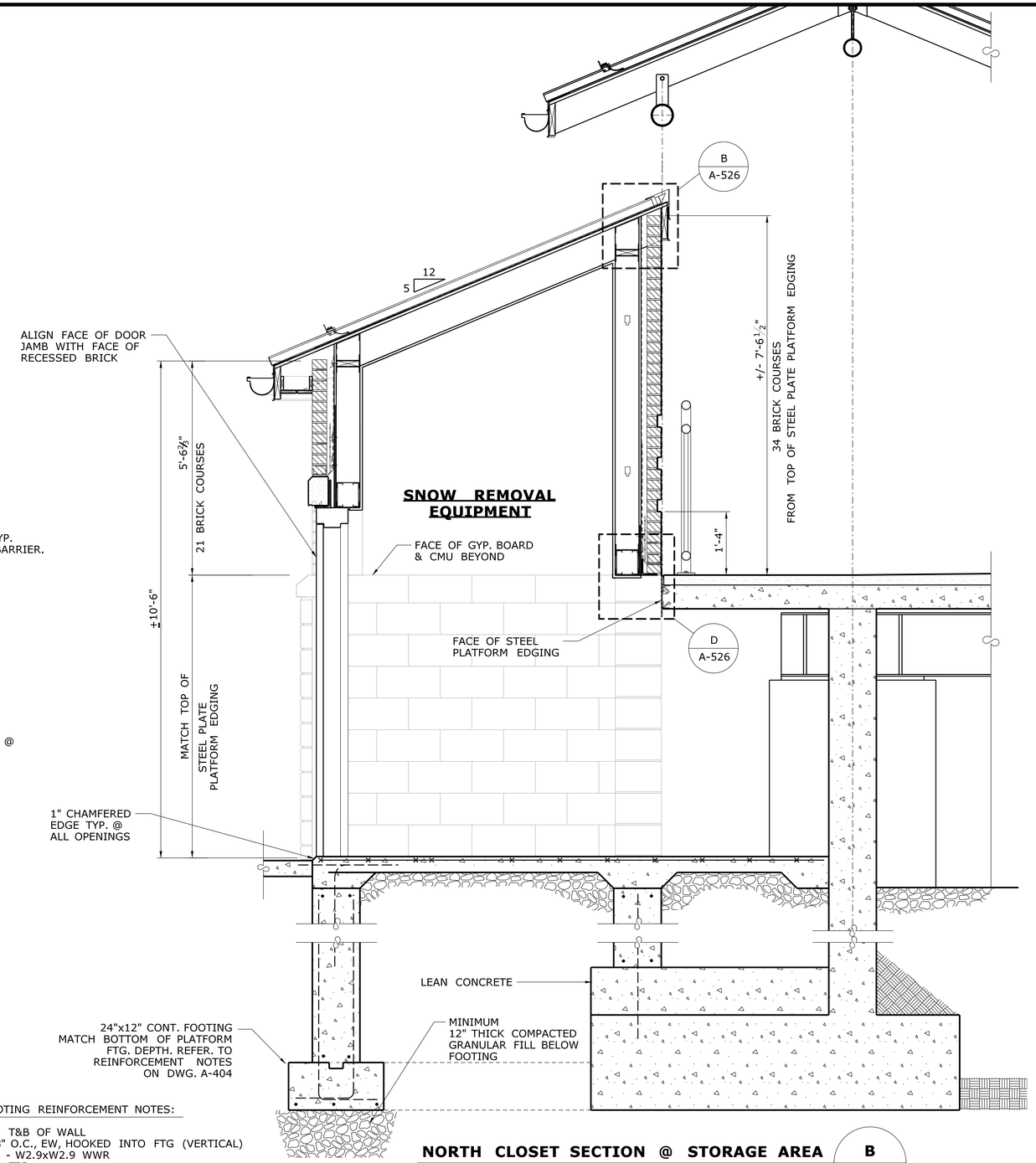

NORTH CLOSET SECTION @ STORAGE AREA **B** / **A-404**

SCALE: 3/4"=1'-0"

FOUNDATION/FOOTING REINFORCEMENT NOTES:

-(2) #6 BARS @ T&B OF WALL
-#6 BARS @ 18" O.C., EW, HOOKED INTO FTG (VERTICAL)
-4" SLAB W/ 6x6 - W2.9xW2.9 WWR
-(3) #6 BARS IN FTG
-MIN OF 42" FROM BOTTOM OF FTG TO GRADE
-(3) # 6 BARS, DOWELED 6" INTO STEM WALL FOOTING & NEW FOOTING, AND GROUTED SOLID

REV.	DATE	REVISION DESCRIPTION	SHEET NO.

Filename: FD_MSH_ARC_0027_0059_A-305.dgn

THE INFORMATION, INCLUDING ESTIMATED QUANTITIES OF WORK, SHOWN ON THESE SHEETS IS BASED ON LIMITED INVESTIGATIONS BY THE STATE AND IS IN NO WAY WARRANTED TO INDICATE THE CONDITIONS OF ACTUAL QUANTITIES OF WORK WHICH WILL BE REQUIRED.

Date Plotted: October 01, 2014

DESIGNER/DRAFTER: D. TUDRYN / R. WRIGHT
CHECKED BY: D. TUDRYN
SCALE AS NOTED

STATE OF CONNECTICUT
DEPARTMENT OF TRANSPORTATION

ENGINEER: BAKER ENGINEERING
APPROVED BY:
DATE:

PROJECT TITLE: SHORE LINE EAST RAILROAD STATIONS

TOWN: CLINTON

DRAWING TITLE: NORTH MAINTENANCE CLOSET SECTIONS

PROJECT NO. 310-0059
DRAWING NO. A-305
SHEET NO. 04.22

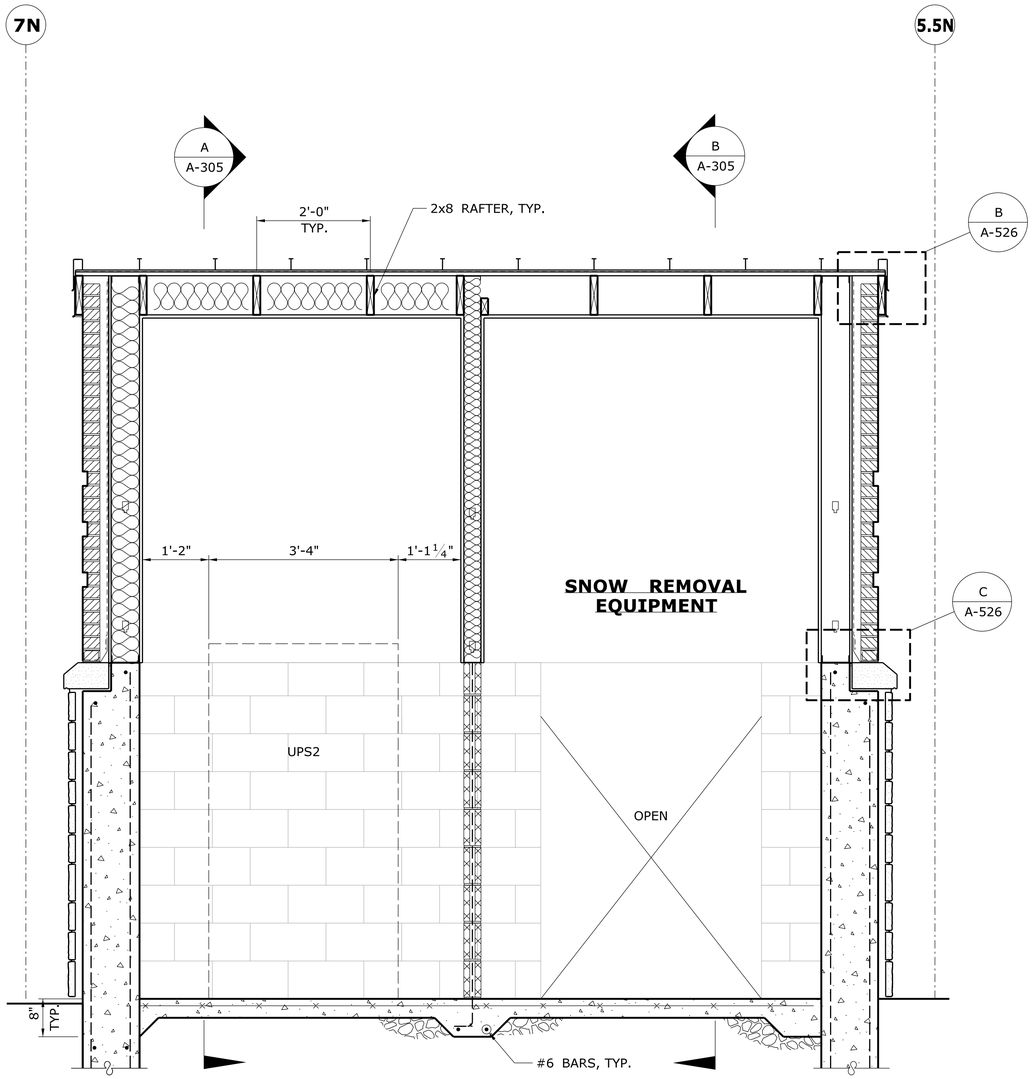

NORTH MAINTENANCE CLOSET SECTION (A / A-404)

SCALE: 3/4"=1'-0"

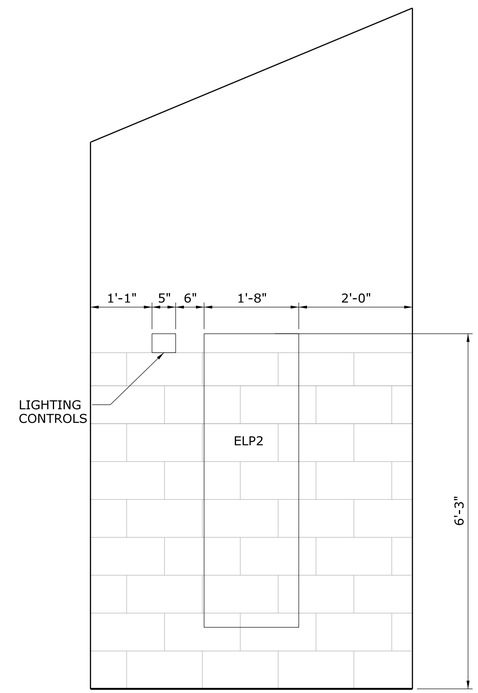

NORTH CLOSET INTERIOR ELEVATION (B / A-404)

SCALE: 3/4"=1'-0"

FOUNDATION/FOOTING REINFORCEMENT NOTES:

-(2) #6 BARS @ T&B OF WALL
-#6 BARS @ 18" O.C., EW, HOOKED INTO FTG (VERTICAL)
-4" SLAB W/ 6x6 - W2.9xW2.9 WWR
-(3) #6 BARS IN FTG
-MIN OF 42" FROM BOTTOM OF FTG TO GRADE
-(3) # 6 BARS, DOWELED 6" INTO STEM WALL FOOTING & NEW FOOTING, AND GROUTED SOLID

REV.	DATE	REVISION DESCRIPTION	SHEET NO.

Filename: FD_MSH_ARC_0027_0059_A-306.dgn

THE INFORMATION, INCLUDING ESTIMATED QUANTITIES OF WORK, SHOWN ON THESE SHEETS IS BASED ON LIMITED INVESTIGATIONS BY THE STATE AND IS IN NO WAY WARRANTED TO INDICATE THE CONDITIONS OF ACTUAL QUANTITIES OF WORK WHICH WILL BE REQUIRED.

Date Plotted: October 01, 2014

DESIGNER/DRAFTER: D. TUDRYN / R. WRIGHT
CHECKED BY: D. TUDRYN
SCALE AS NOTED

STATE OF CONNECTICUT
DEPARTMENT OF TRANSPORTATION

ENGINEER: BAKER ENGINEERING
APPROVED BY:
DATE:

PROJECT TITLE:
SHORE LINE EAST
RAILROAD STATIONS

TOWN: CLINTON

DRAWING TITLE:
NORTH MAINTENANCE CLOSET
SECTION & INTERIOR ELEVATIONS

PROJECT NO. 310-0059
DRAWING NO. A-306
SHEET NO. 04.23

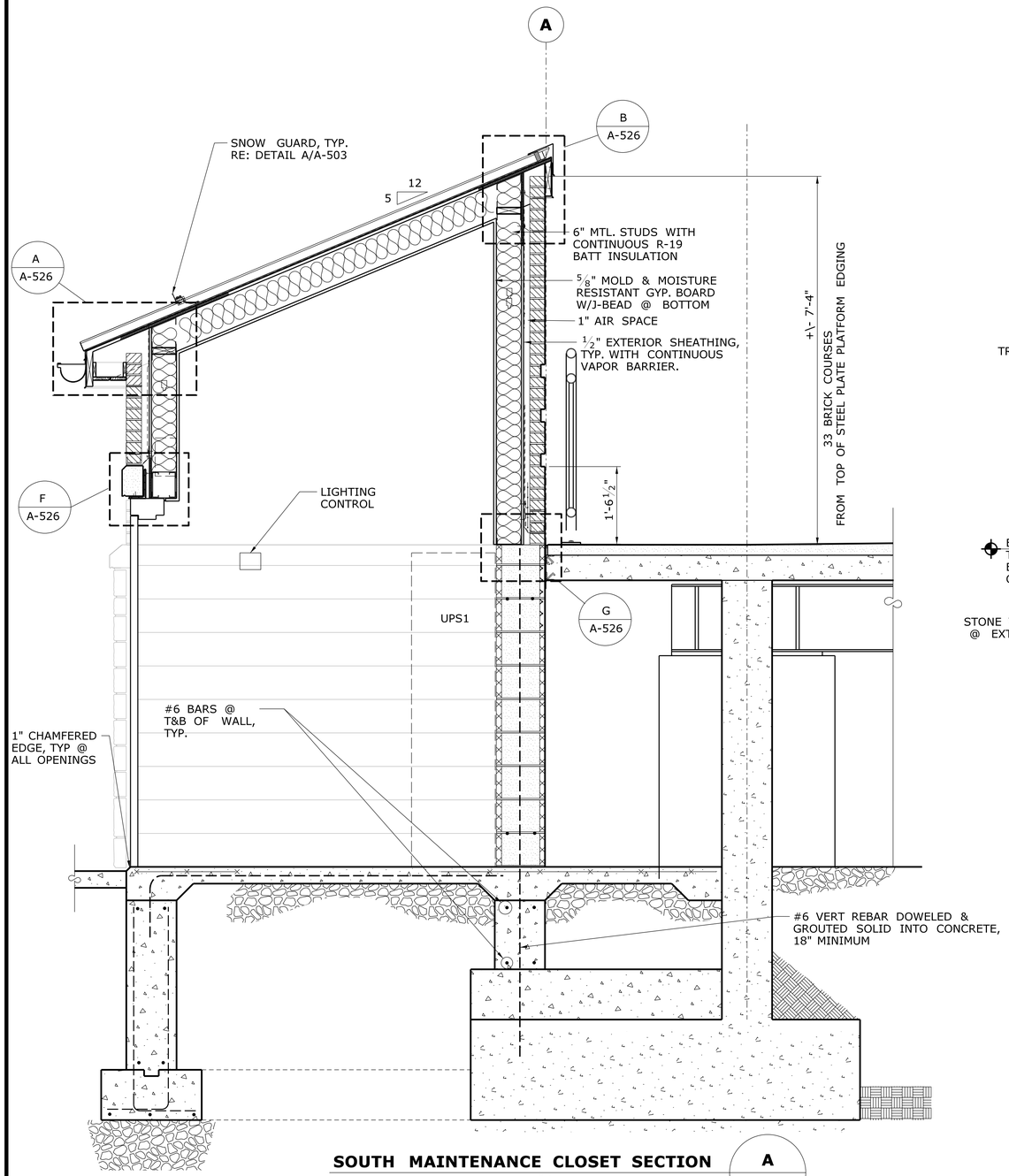

SOUTH MAINTENANCE CLOSET SECTION — A / A-405

SCALE: 3/4"=1'-0"

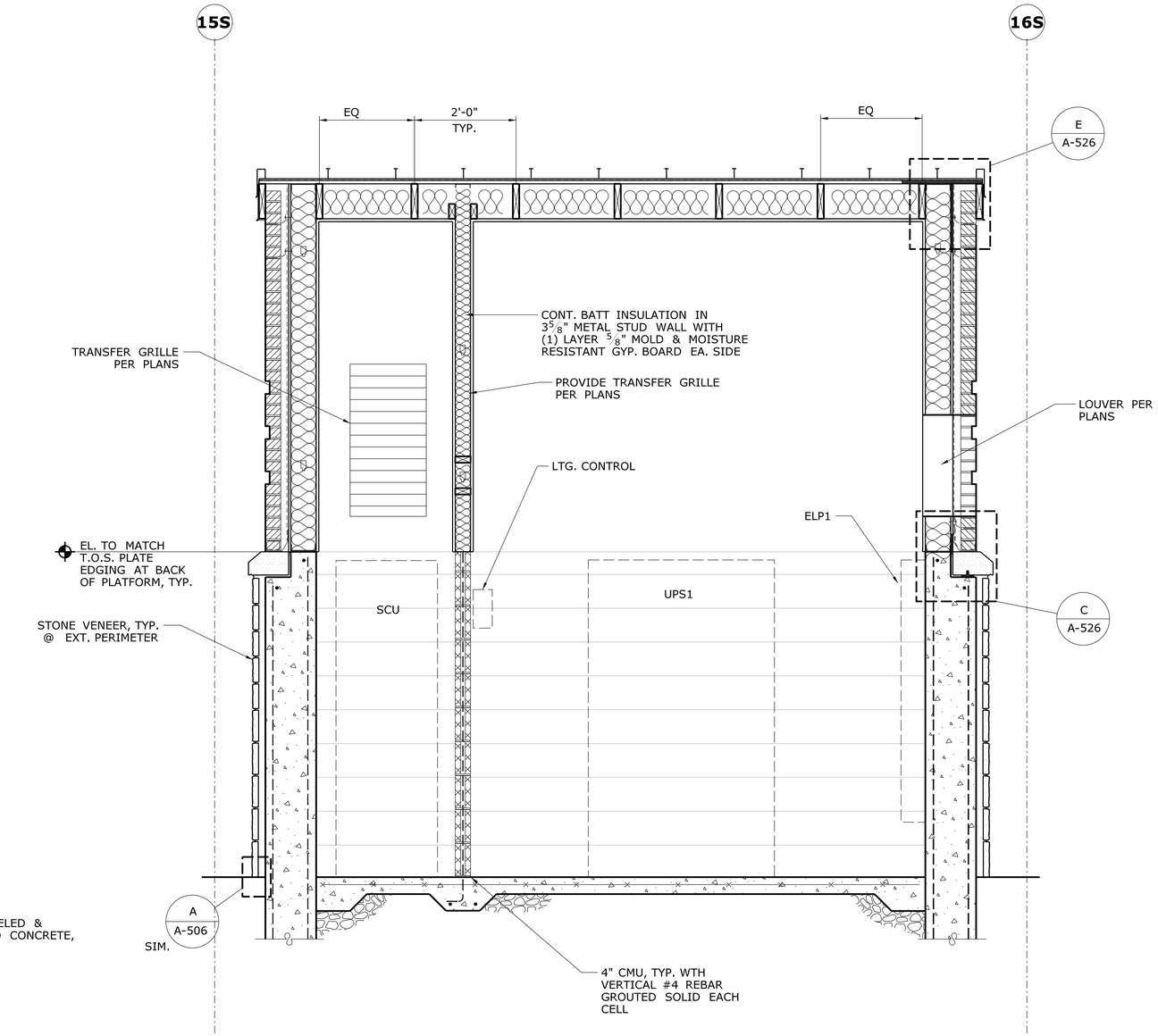

SOUTH MAINTENANCE CLOSET SECTION — B / A-405

SCALE: 3/4"=1'-0"

FOUNDATION/FOOTING REINFORCEMENT NOTES:

-(2) #6 BARS @ T&B OF WALL
-#6 BARS @ 18" O.C., EW, HOOKED INTO FTG (VERTICAL)
-4" SLAB W/ 6x6 - W2.9xW2.9 WWR
-(3) #6 BARS IN FTG
-MIN OF 42" FROM BOTTOM OF FTG TO GRADE
-(3) # 6 BARS, DOWELED 6" INTO STEM WALL FOOTING & NEW FOOTING, AND GROUTED SOLID

REV.	DATE	REVISION DESCRIPTION	SHEET NO.

Filename: FD_MSH_ARC_0027_0059_A-307.dgn

THE INFORMATION, INCLUDING ESTIMATED QUANTITIES OF WORK, SHOWN ON THESE SHEETS IS BASED ON LIMITED INVESTIGATIONS BY THE STATE AND IS IN NO WAY WARRANTED TO INDICATE THE CONDITIONS OF ACTUAL QUANTITIES OF WORK WHICH WILL BE REQUIRED.

Date Plotted: October 01, 2014

DESIGNER/DRAFTER: D. TUDRYN / R. WRIGHT
CHECKED BY: D. TUDRYN
SCALE AS NOTED

STATE OF CONNECTICUT
DEPARTMENT OF TRANSPORTATION

ENGINEER: BAKER ENGINEERING
APPROVED BY:
DATE:

STATE OF CONNECTICUT
DEPT. OF TRANSPORTATION
96-19079
LICENSED
PROFESSIONAL ENGINEER

PROJECT TITLE:
SHORE LINE EAST RAILROAD STATIONS

TOWN: **CLINTON**

DRAWING TITLE: **SOUTH MAINTENANCE CLOSET SECTIONS**

PROJECT NO. **310-0059**
DRAWING NO. **A-307**
SHEET NO. **04.24**

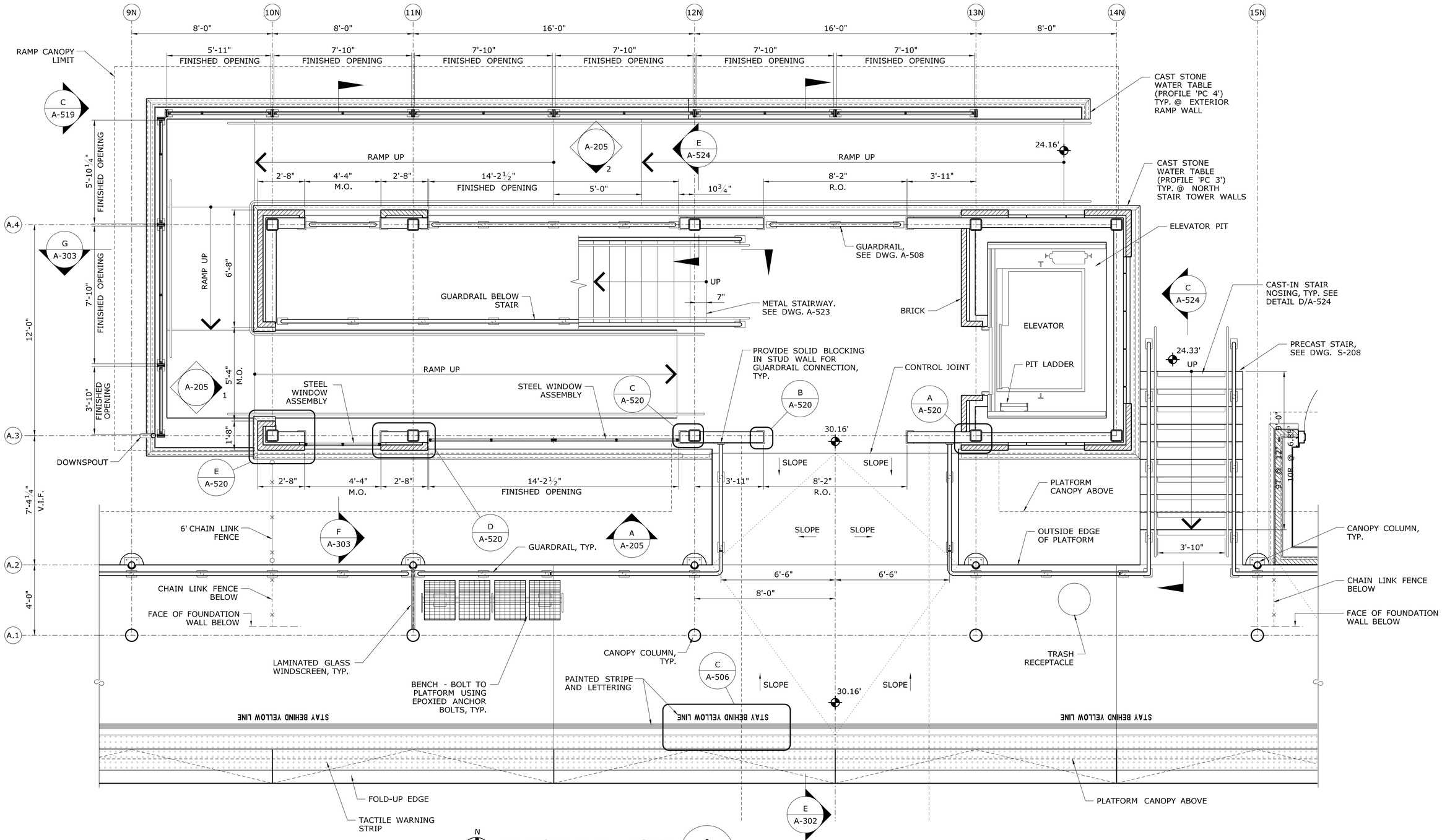

ENLARGED PLAN - NORTH

SCALE: ⅜"=1'-0"

A / A-100

REV.	DATE	REVISION DESCRIPTION	SHEET NO.

Filename: FFD_MSH_ARC_0027_0059_A-400.dgn

THE INFORMATION, INCLUDING ESTIMATED QUANTITIES OF WORK, SHOWN ON THESE SHEETS IS BASED ON LIMITED INVESTIGATIONS BY THE STATE AND IS IN NO WAY WARRANTED TO INDICATE THE CONDITIONS OF ACTUAL QUANTITIES OF WORK WHICH WILL BE REQUIRED.

Date Plotted: October 01, 2014

DESIGNER/DRAFTER: D. TUDRYN / R. WRIGHT

CHECKED BY: D. TUDRYN

SCALE AS NOTED

STATE OF CONNECTICUT
DEPARTMENT OF TRANSPORTATION

ENGINEER: BAKER ENGINEERING

APPROVED BY: DATE:

PROJECT TITLE: SHORE LINE EAST RAILROAD STATIONS

TOWN: CLINTON

DRAWING TITLE: ENLARGED PLAN - NORTH

PROJECT NO. 310-0059

DRAWING NO. A-400

SHEET NO. 04.25

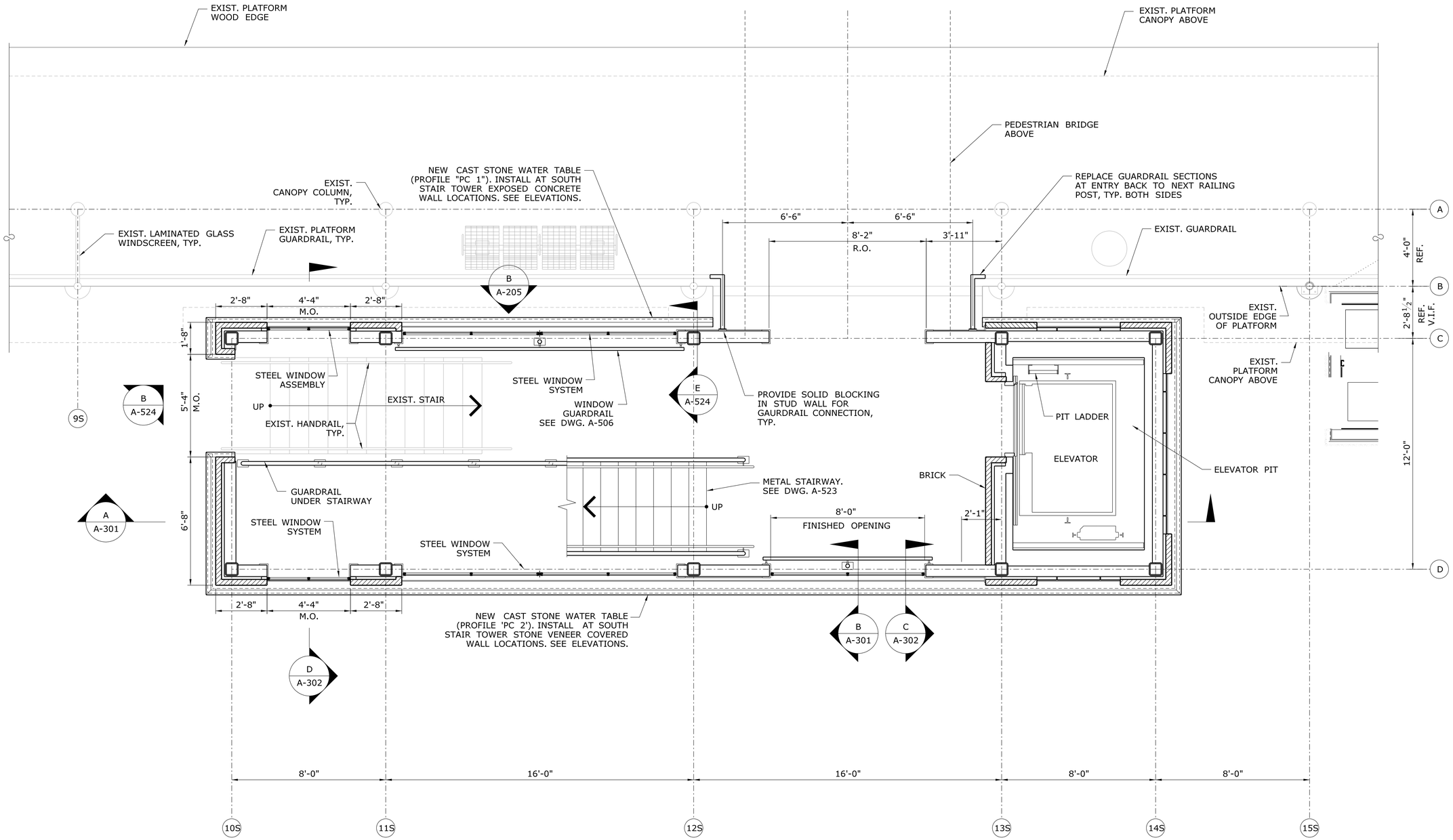

ENLARGED PLAN - SOUTH

SCALE: 3/8"=1'-0"

B / A-100

REV.	DATE	REVISION DESCRIPTION	SHEET NO.

Filename: FFD_MSH_ARC_0058_0059_A-401.dgn

THE INFORMATION, INCLUDING ESTIMATED QUANTITIES OF WORK, SHOWN ON THESE SHEETS IS BASED ON LIMITED INVESTIGATIONS BY THE STATE AND IS IN NO WAY WARRANTED TO INDICATE THE CONDITIONS OF ACTUAL QUANTITIES OF WORK WHICH WILL BE REQUIRED.

Date Plotted: October 01, 2014

DESIGNER/DRAFTER: D. TUDRYN / R. WRIGHT

CHECKED BY: D. TUDRYN

SCALE AS NOTED

STATE OF CONNECTICUT
DEPARTMENT OF TRANSPORTATION

ENGINEER: BAKER ENGINEERING

APPROVED BY:

DATE:

PROJECT TITLE:

SHORE LINE EAST RAILROAD STATIONS

TOWN: CLINTON

DRAWING TITLE: ENLARGED PLAN - SOUTH

PROJECT NO. 310-0059

DRAWING NO. A-401

SHEET NO. 04.26

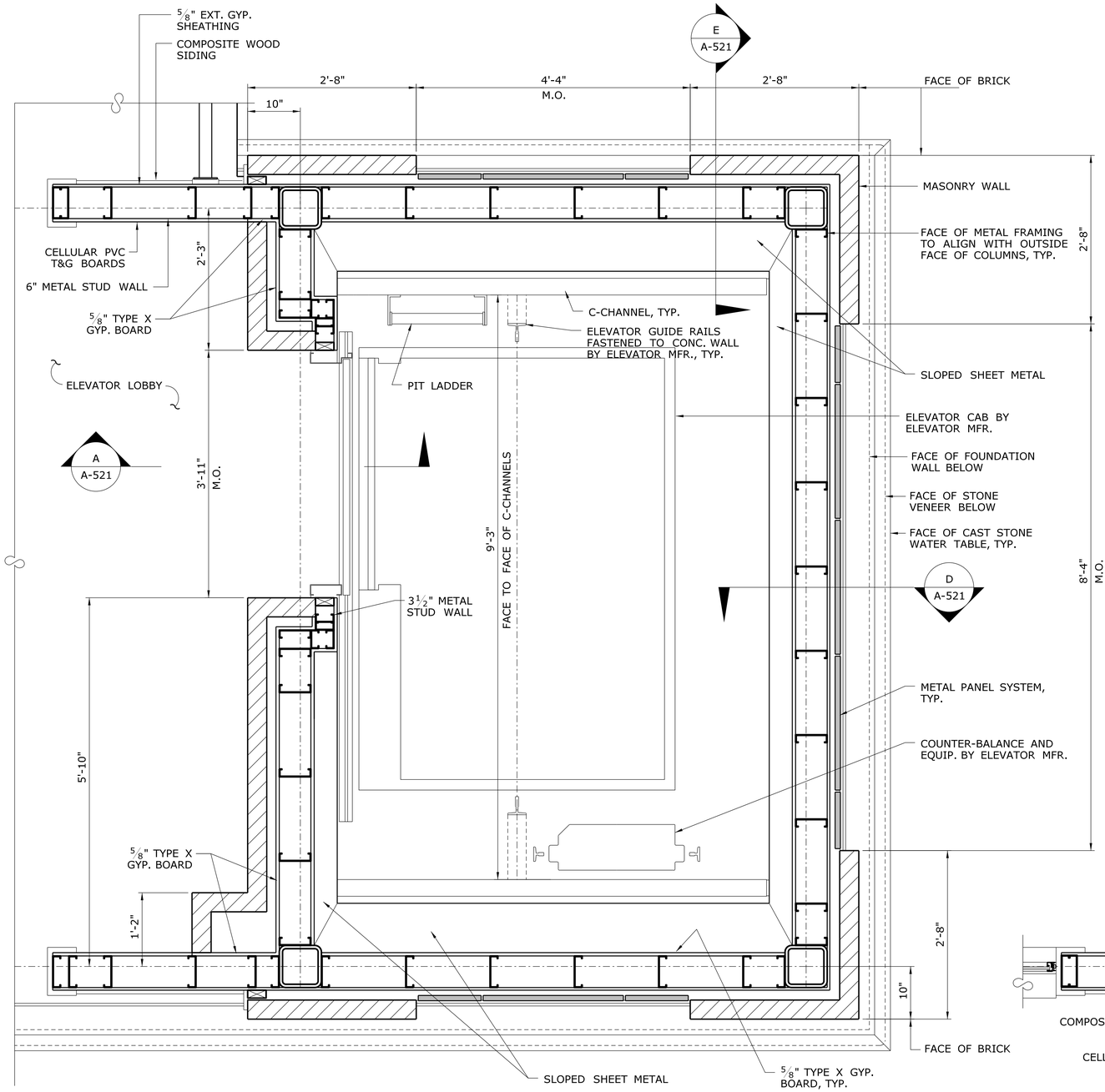

ENLARGED PLAN A / A-301

SCALE: 1"=1'-0"

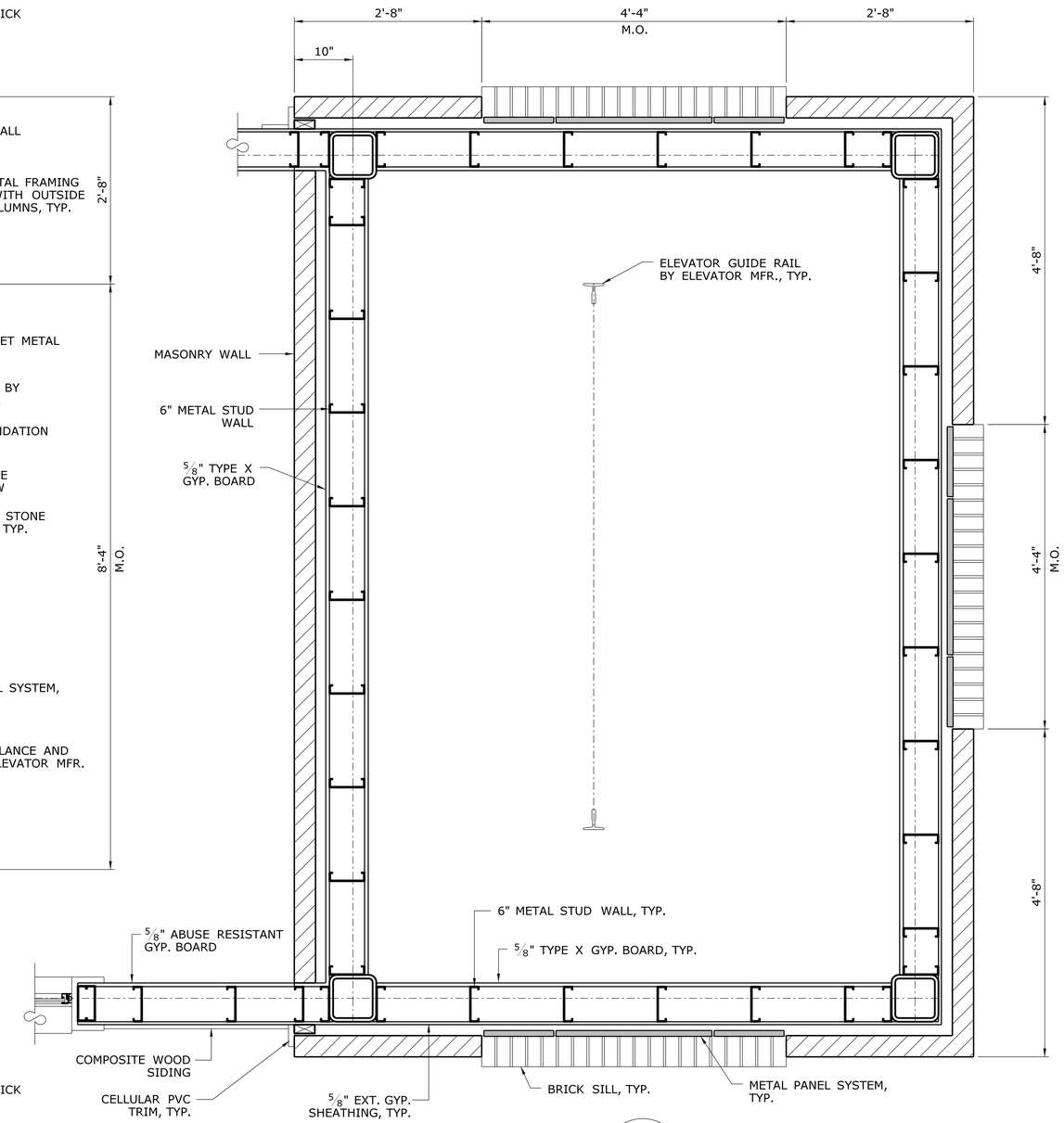

ENLARGED PLAN B / A-301

SCALE: 1"=1'-0"

REV.	DATE	REVISION DESCRIPTION	SHEET NO.

Filename: FD_MSH_ARC_0027_0059_A-402.dgn

THE INFORMATION, INCLUDING ESTIMATED QUANTITIES OF WORK, SHOWN ON THESE SHEETS IS BASED ON LIMITED INVESTIGATIONS BY THE STATE AND IS IN NO WAY WARRANTED TO INDICATE THE CONDITIONS OF ACTUAL QUANTITIES OF WORK WHICH WILL BE REQUIRED.

Date Plotted: October 01, 2014

DESIGNER/DRAFTER: D. TUDRYN / R. WRIGHT

CHECKED BY: D. TUDRYN

SCALE AS NOTED

STATE OF CONNECTICUT
DEPARTMENT OF TRANSPORTATION

ENGINEER: BAKER ENGINEERING

APPROVED BY:

DATE:

PROJECT TITLE:

SHORE LINE EAST RAILROAD STATIONS

TOWN: **CLINTON**

DRAWING TITLE: **ENLARGED PLANS - ELEVATOR - 1**

PROJECT NO. **310-0059**

DRAWING NO. **A-402**

SHEET NO. **04.27**

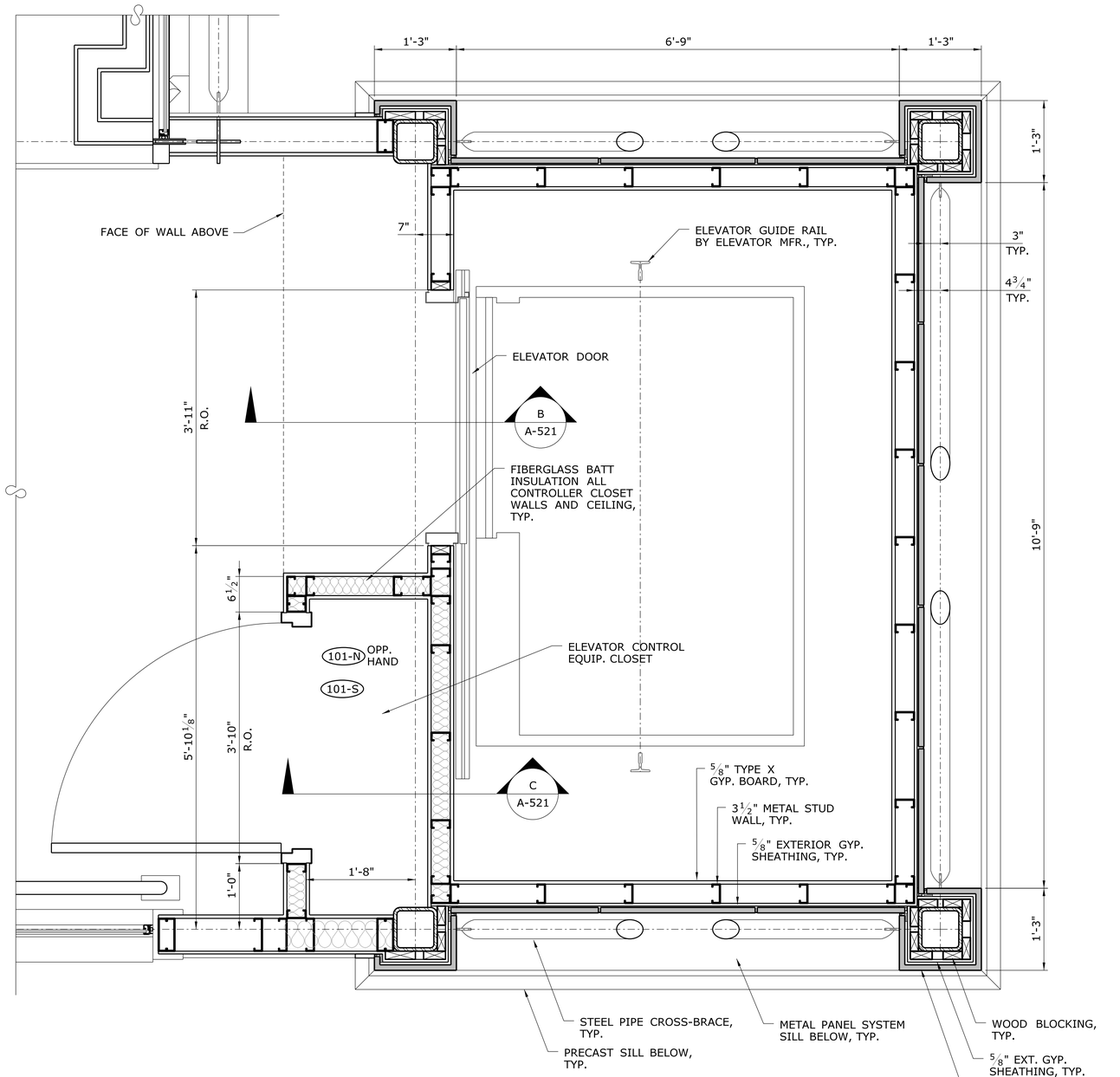

ENLARGED PLAN C / A-301 C / A-101

SCALE: 1"=1'-0"

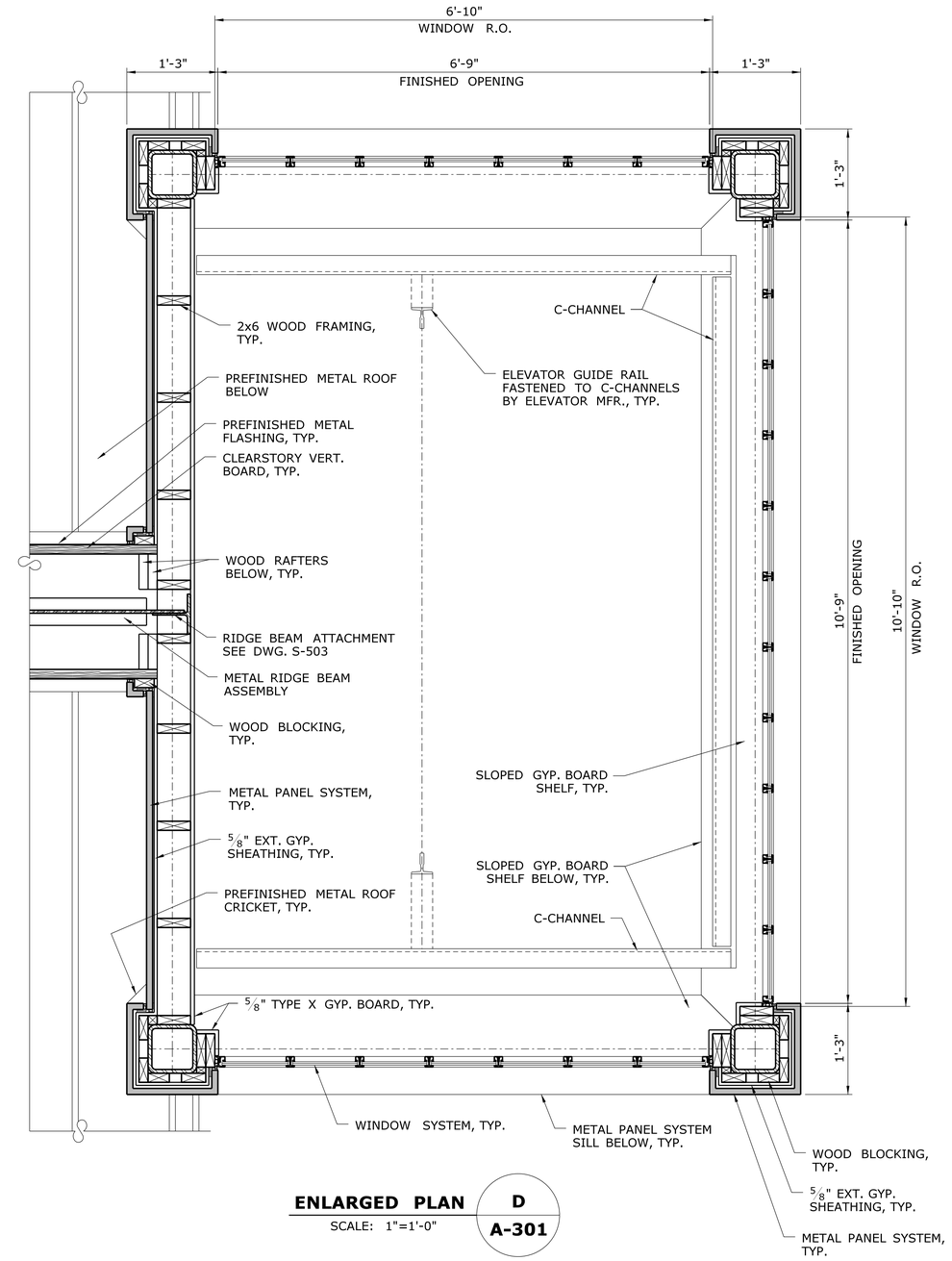

ENLARGED PLAN D / A-301

SCALE: 1"=1'-0"

REV.	DATE	REVISION DESCRIPTION	SHEET NO.

Filename: FD_MSH_ARC_0027_0059_A-403.dgn

THE INFORMATION, INCLUDING ESTIMATED QUANTITIES OF WORK, SHOWN ON THESE SHEETS IS BASED ON LIMITED INVESTIGATIONS BY THE STATE AND IS IN NO WAY WARRANTED TO INDICATE THE CONDITIONS OF ACTUAL QUANTITIES OF WORK WHICH WILL BE REQUIRED.

Date Plotted: October 01, 2014

DESIGNER/DRAFTER: D. TUDRYN / R. WRIGHT

CHECKED BY: D. TUDRYN

SCALE AS NOTED

STATE OF CONNECTICUT
DEPARTMENT OF TRANSPORTATION

ENGINEER: BAKER ENGINEERING

APPROVED BY: DATE:

PROJECT TITLE: SHORE LINE EAST RAILROAD STATIONS

TOWN: CLINTON

DRAWING TITLE: ENLARGED PLANS - ELEVATOR - 2

PROJECT NO. 310-0059

DRAWING NO. A-403

SHEET NO. 04.28

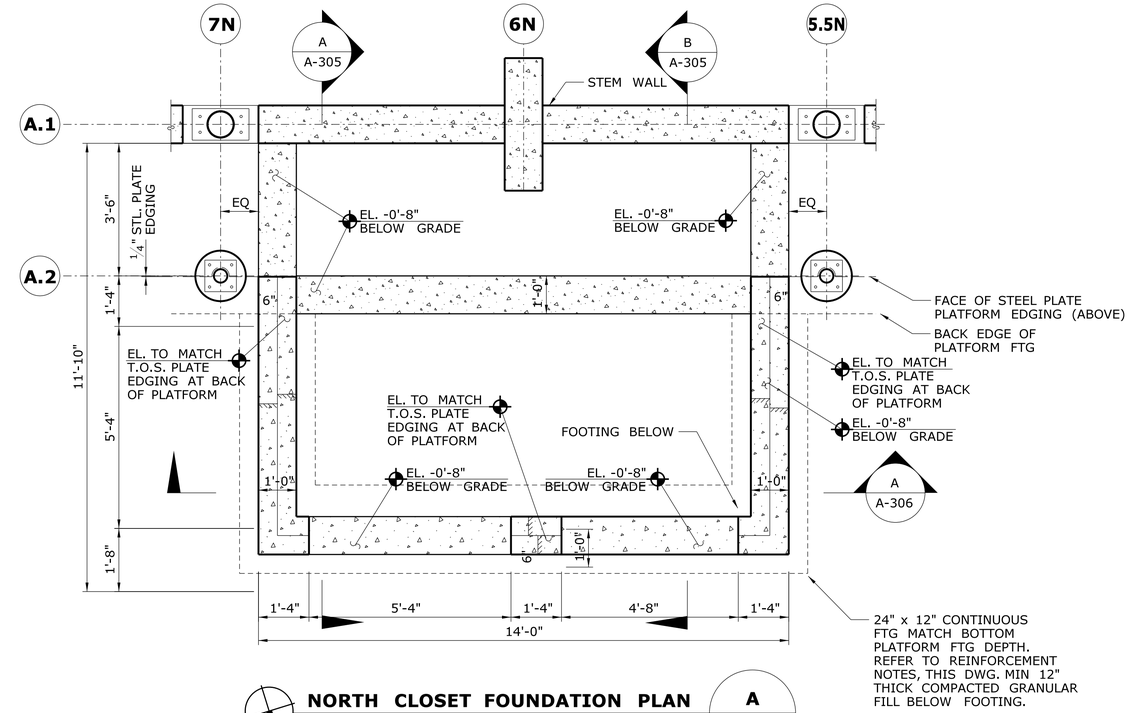

NORTH CLOSET FOUNDATION PLAN

SCALE: 1/2"=1'-0"

A / A-404

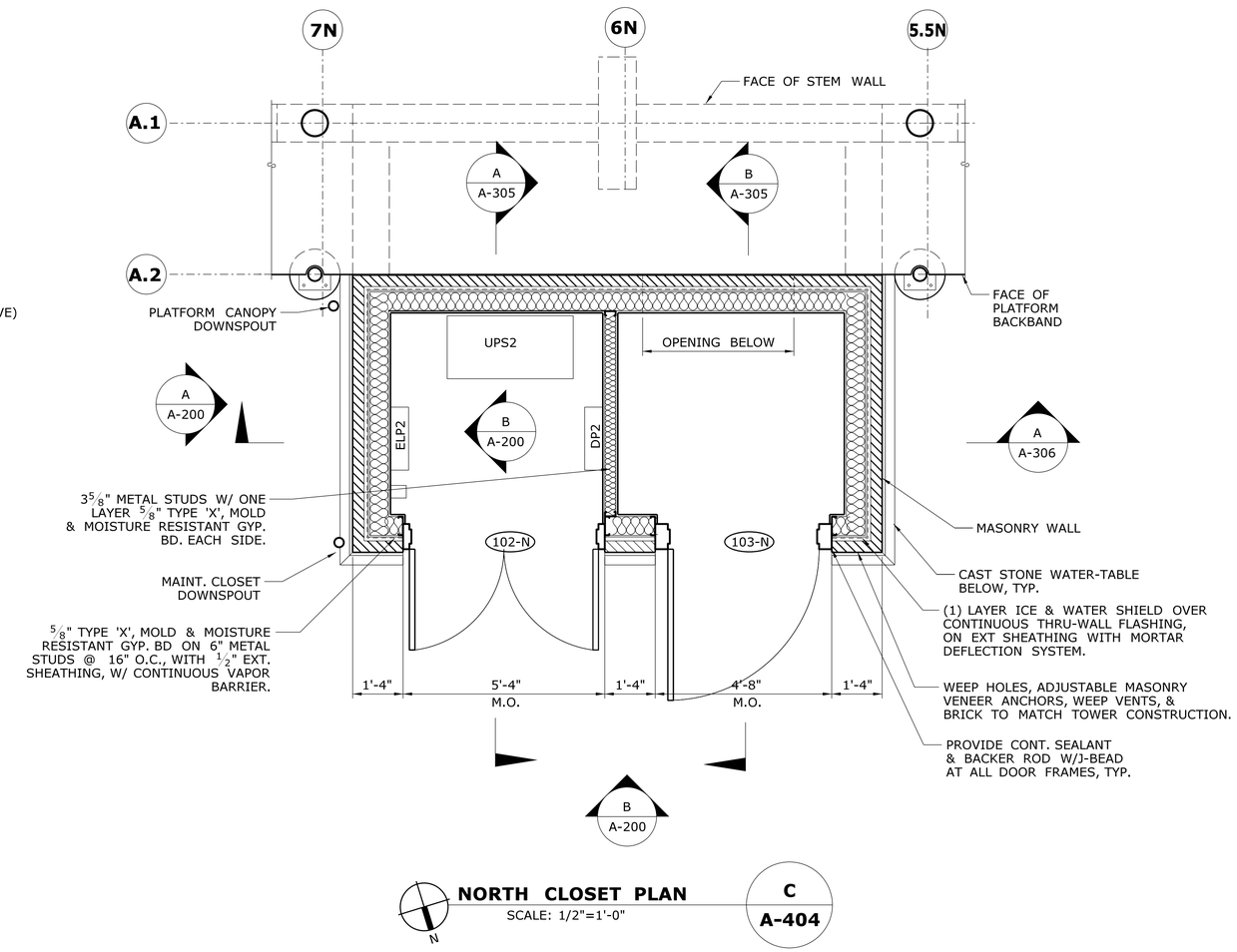

NORTH CLOSET PLAN

SCALE: 1/2"=1'-0"

C / A-404

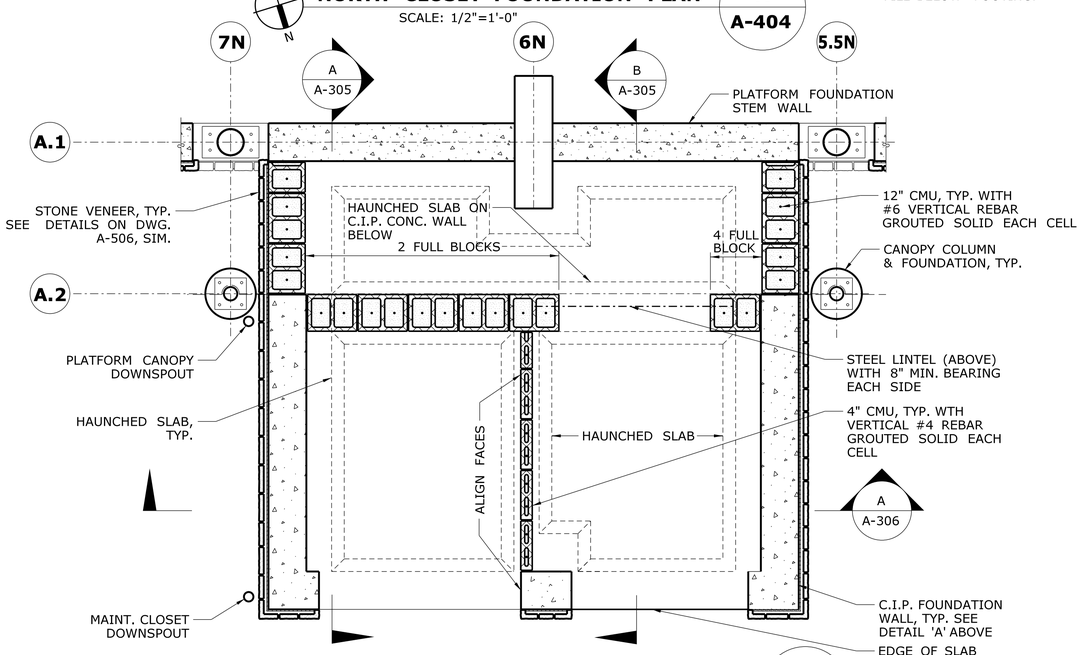

NORTH CLOSET PLAN @ +2' ABOVE GRADE

SCALE: 1/2"=1'-0"

B / A-404

FOUNDATION/FOOTING REINFORCEMENT NOTES:

- -(2) #6 BARS @ T&B OF WALL
- -#6 BARS @ 18" O.C., EW, HOOKED INTO FTG (VERTICAL)
- -4" SLAB W/ 6x6 - W2.9xW2.9 WWR
- -(3) #6 BARS IN FTG
- -MIN OF 42" FROM BOTTOM OF FTG TO GRADE
- -(3) # 6 BARS, DOWELED 6" INTO STEM WALL FOOTING & NEW FOOTING, AND GROUTED SOLID

REV.	DATE	REVISION DESCRIPTION	SHEET NO.

Filename: FD_MSH_ARC_0027_0059_A-404.dgn

THE INFORMATION, INCLUDING ESTIMATED QUANTITIES OF WORK, SHOWN ON THESE SHEETS IS BASED ON LIMITED INVESTIGATIONS BY THE STATE AND IS IN NO WAY WARRANTED TO INDICATE THE CONDITIONS OF ACTUAL QUANTITIES OF WORK WHICH WILL BE REQUIRED.

Date Plotted: October 01, 2014

DESIGNER/DRAFTER: D. TUDRYN / R. WRIGHT

CHECKED BY: D. TUDRYN

SCALE AS NOTED

STATE OF CONNECTICUT
DEPARTMENT OF TRANSPORTATION

ENGINEER: BAKER ENGINEERING

APPROVED BY:

DATE:

PROJECT TITLE: SHORE LINE EAST RAILROAD STATIONS

TOWN: CLINTON

DRAWING TITLE: NORTH MAINTENANCE CLOSET PLANS

PROJECT NO. 310-0059

DRAWING NO. A-404

SHEET NO. 04.29

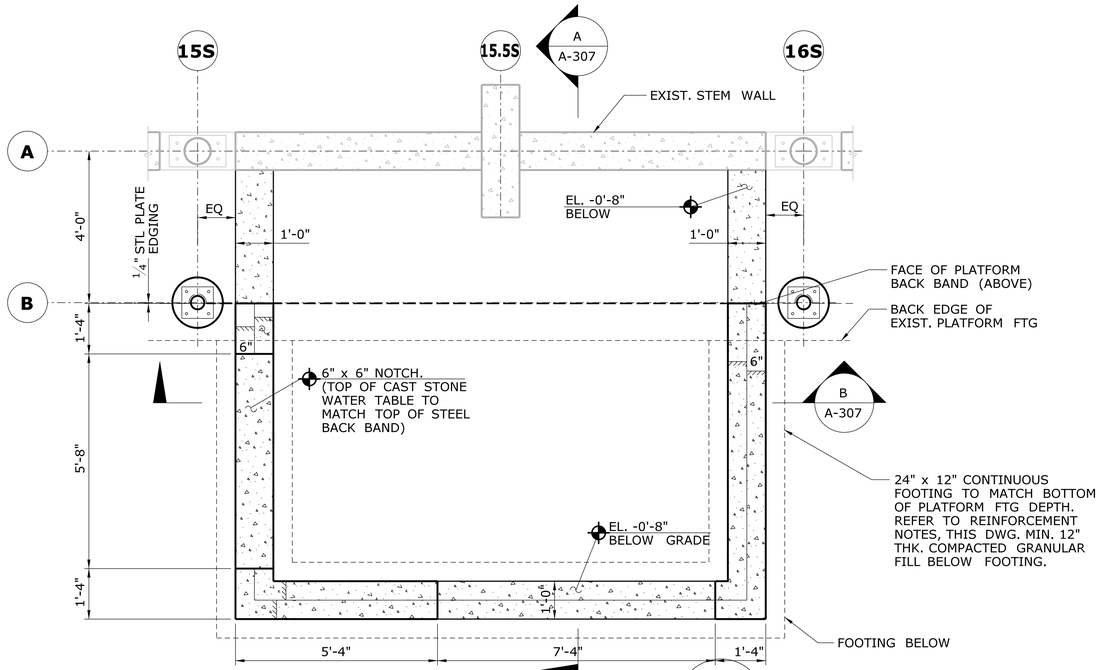

SOUTH CLOSET FOUNDATION PLAN — A / A-405

SCALE: 1/2"=1'-0"

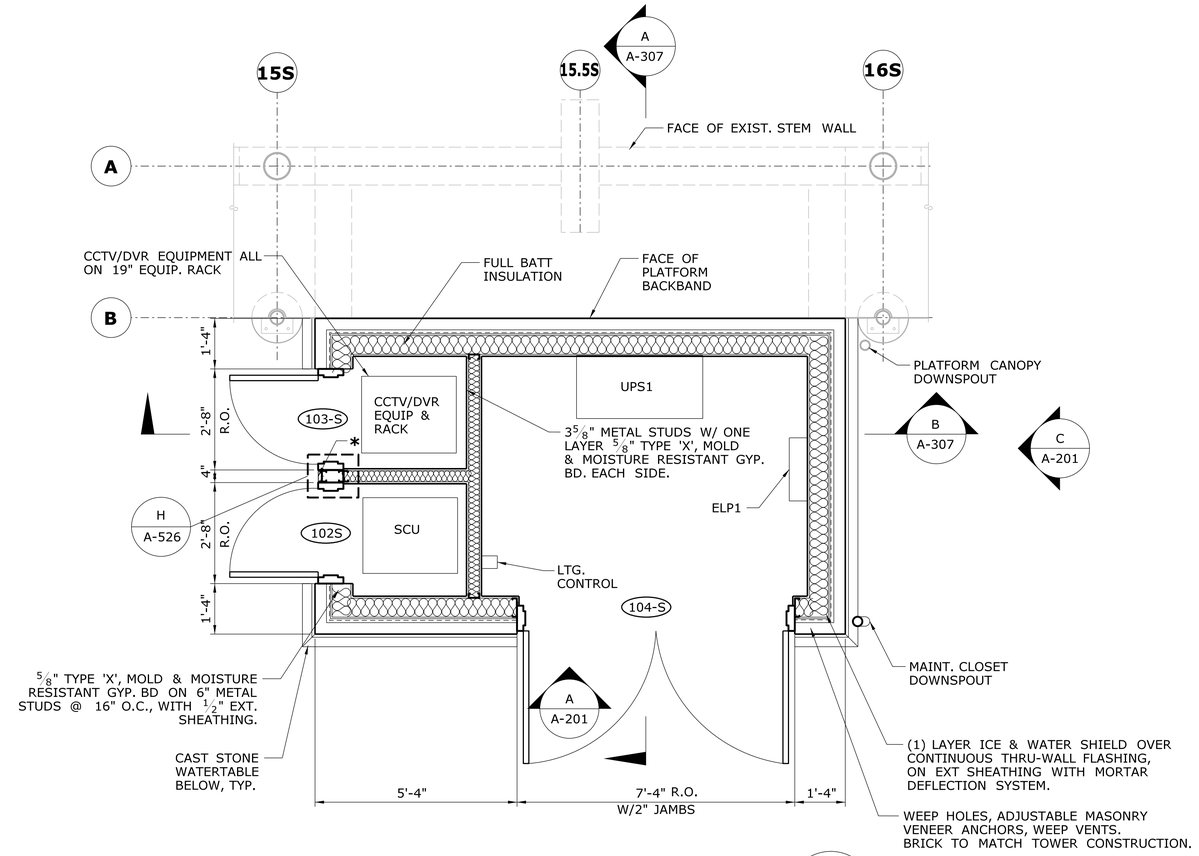

SOUTH MAINTENANCE CLOSET PLAN — C / A-405

SCALE: 1/2"=1'-0"

* METAL CLOSURE PLATE BETWEEN JAMBS TO MATCH JAMB MATERIAL & FINISH. PLATE TO ALIGN WITH FACE OF JAMBS. SUBMIT SHOP DWGS. FOR REVIEW & APPROVAL.

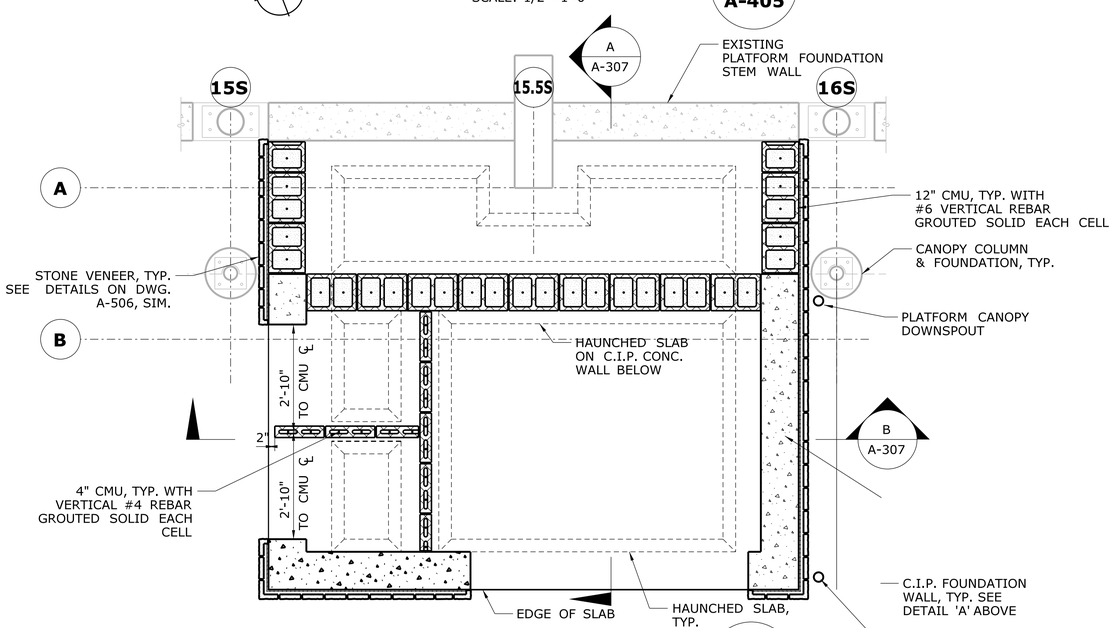

SOUTH CLOSET PLAN @ 2' ABOVE GRADE — B / A-405

SCALE: 1/2"=1'-0"

FOUNDATION/FOOTING REINFORCEMENT NOTES:

- (2) #6 BARS @ T&B OF WALL
- #6 BARS @ 18" O.C., EW, HOOKED INTO FTG (VERTICAL)
- 4" SLAB W/ 6x6 - W2.9xW2.9 WWR
- (3) #6 BARS IN FTG
- MIN OF 42" FROM BOTTOM OF FTG TO GRADE
- (3) #6 BARS, DOWELED 6" INTO STEM WALL FOOTING & NEW FOOTING & GROUTED SOLID.

REV.	DATE	REVISION DESCRIPTION	SHEET NO.

Filename: FD_MSH_ARC_0027_0059_A-405.dgn

THE INFORMATION, INCLUDING ESTIMATED QUANTITIES OF WORK, SHOWN ON THESE SHEETS IS BASED ON LIMITED INVESTIGATIONS BY THE STATE AND IS IN NO WAY WARRANTED TO INDICATE THE CONDITIONS OF ACTUAL QUANTITIES OF WORK WHICH WILL BE REQUIRED.

Date Plotted: October 01, 2014

DESIGNER/DRAFTER: D. TUDRYN / R. WRIGHT

CHECKED BY: D. TUDRYN

SCALE AS NOTED

STATE OF CONNECTICUT
DEPARTMENT OF TRANSPORTATION

ENGINEER: BAKER ENGINEERING

APPROVED BY: DATE:

PROJECT TITLE: **SHORE LINE EAST RAILROAD STATIONS**

TOWN: **CLINTON**

DRAWING TITLE: **NORTH MAINTENANCE CLOSET PLANS**

PROJECT NO. **310-0059**

DRAWING NO. **A-405**

SHEET NO. **04.30**

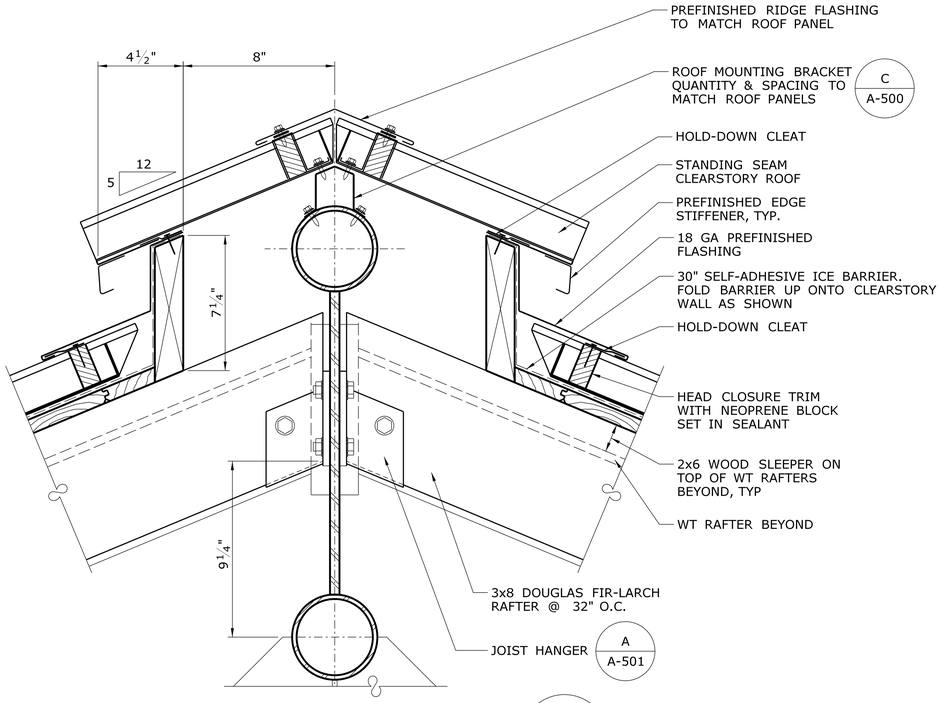

PLATFORM CANOPY RIDGE DETAIL — A / A-300

SCALE: 3"=1'-0"

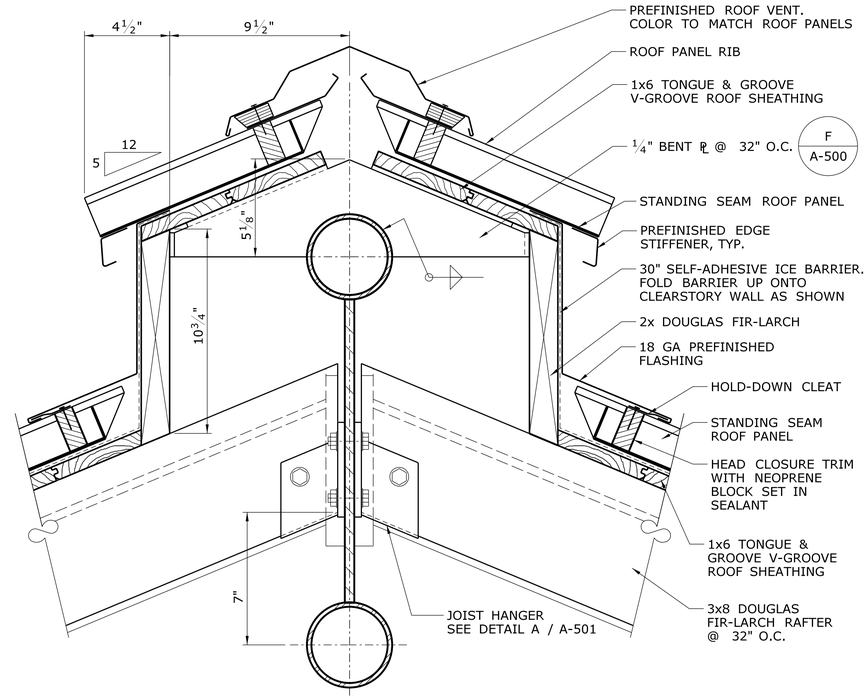

STAIR & BRIDGE RIDGE DETAIL — B / A-302, B / A-304

SCALE: 3"=1'-0"

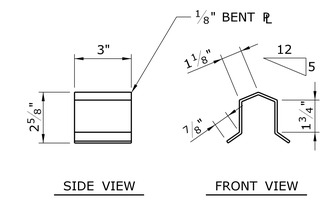

ROOF MOUNTING BRACKET DETAIL — C / A-500

SCALE: 3"=1'-0"

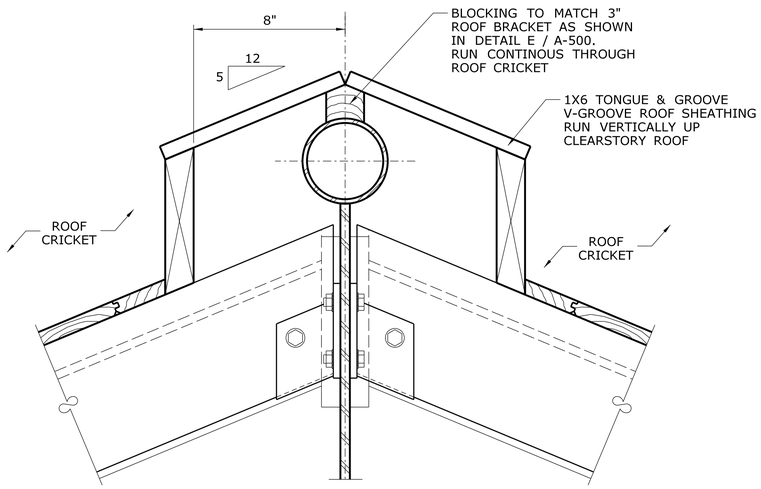

PLATFORM CANOPY RIDGE UNDER CRICKET — D / A-302

SCALE: 3"=1'-0"

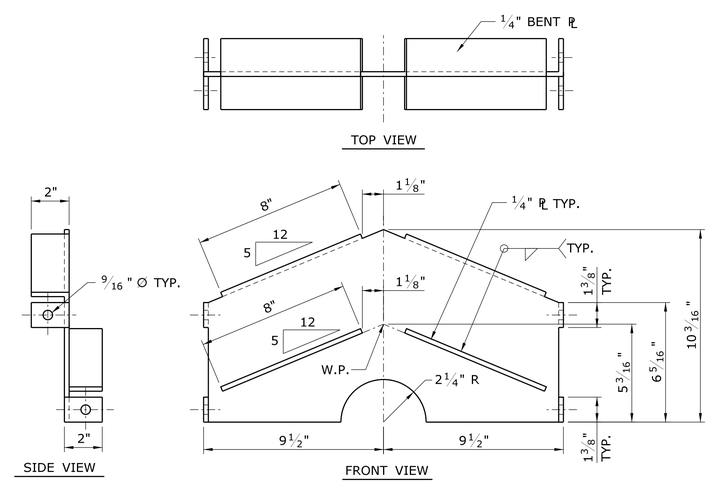

ROOF MOUNTING BRACKET DETAIL — E / A-500

SCALE: 3"=1'-0"

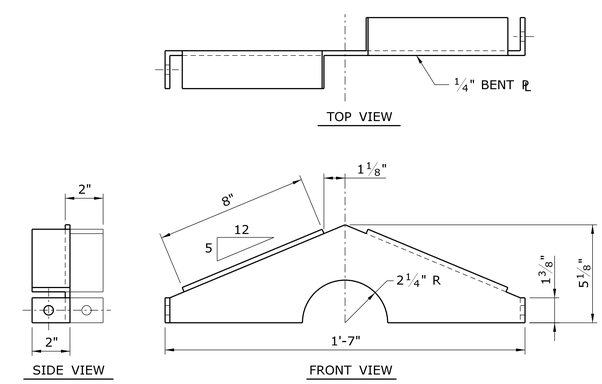

ROOF MOUNTING BRACKET DETAIL — F / A-500

SCALE: 3"=1'-0"

REV.	DATE	REVISION DESCRIPTION	SHEET NO.

Filename: FD_MSH_ARC_0027_0059_A-500.dgn

THE INFORMATION, INCLUDING ESTIMATED QUANTITIES OF WORK, SHOWN ON THESE SHEETS IS BASED ON LIMITED INVESTIGATIONS BY THE STATE AND IS IN NO WAY WARRANTED TO INDICATE THE CONDITIONS OF ACTUAL QUANTITIES OF WORK WHICH WILL BE REQUIRED.

Date Plotted: October 01, 2014

DESIGNER/DRAFTER: D. Tudryn / R. Wright

CHECKED BY: D. TUDRYN

SCALE AS NOTED

STATE OF CONNECTICUT
DEPARTMENT OF TRANSPORTATION

ENGINEER: BAKER ENGINEERING

APPROVED BY:

DATE:

PROJECT TITLE: **SHORE LINE EAST RAILROAD STATIONS**

TOWN: **CLINTON**

DRAWING TITLE: **ROOF DETAILS - 1**

PROJECT NO. 310-0059

DRAWING NO. A-500

SHEET NO. 04.31

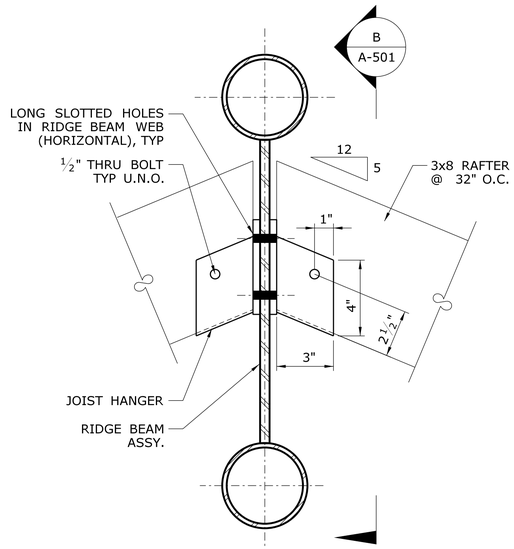

NOTE: SHOP FINISH JOIST HANGER WITH PAINT TO MATCH CANOPY RIDGE BEAM

RAFTER TO RIDGE BEAM CONN. A / A-500

SCALE: 3"=1'-0"

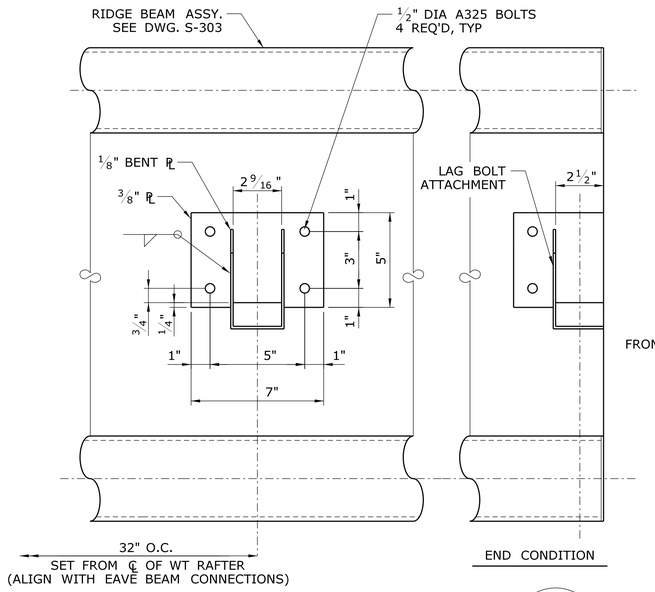

RAFTER TO RIDGE BEAM CONN. B / A-501

SCALE: 3"=1'-0"

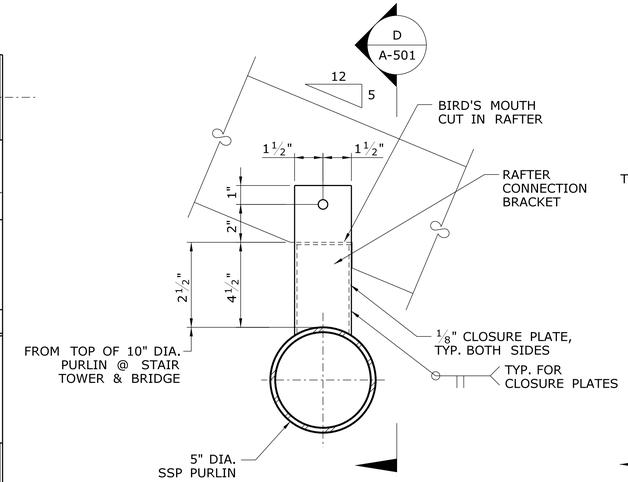

NOTE: SHOP FINISH RAFTER CONNECTION BRACKET WITH PAINT TO MATCH CANOPY PURLIN

RAFTER TO EAVE BEAM CONN. C / A-300

SCALE: 3"=1'-0"

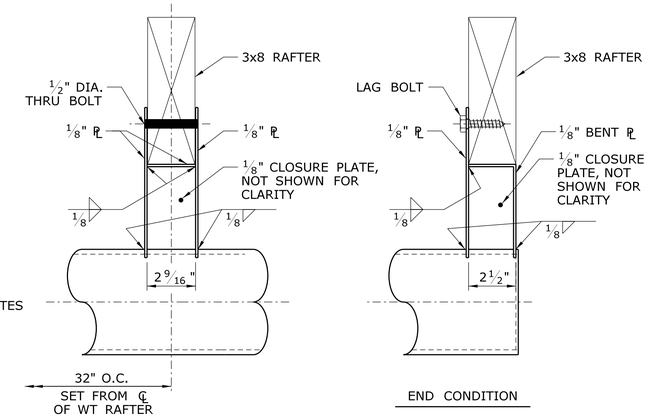

RAFTER TO EAVE BEAM CONN. D / A-501

SCALE: 3"=1'-0"

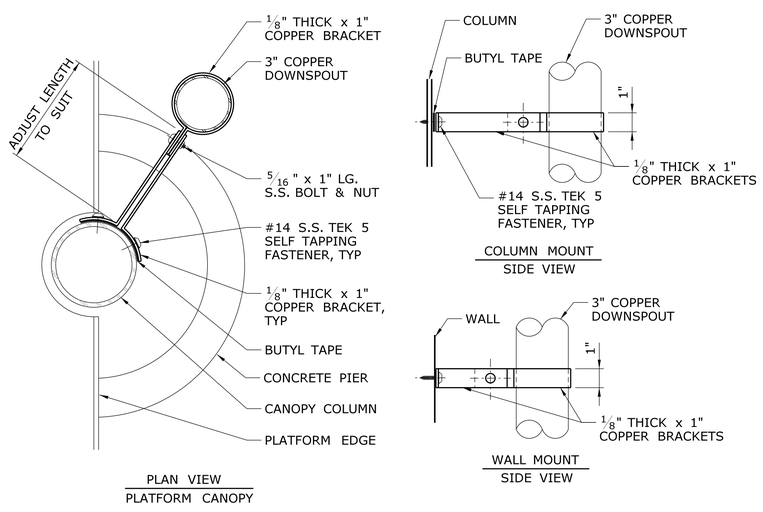

DOWNSPOUT MOUNTING E / A-300

SCALE:3"=1'-0"

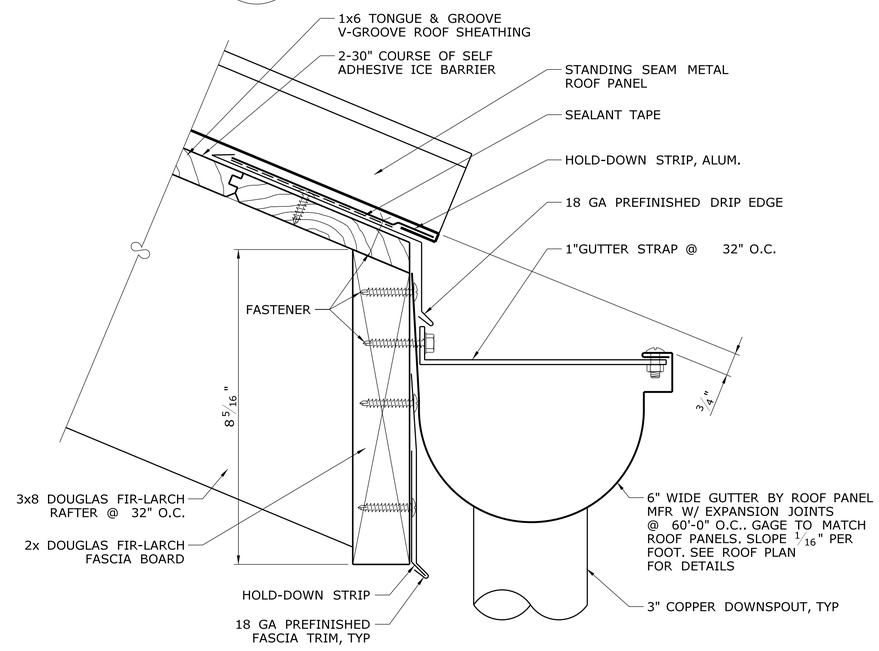

FASCIA DETAIL W/GUTTER F / A-300 F / A-304

SCALE: 6"=1'-0"

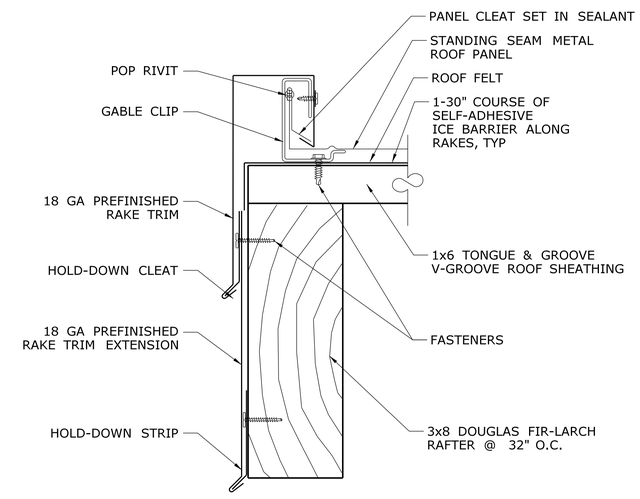

RAKE DETAIL G / A-300

SCALE: 6"=1'-0"

REV.	DATE	REVISION DESCRIPTION	SHEET NO.

Filename: FD_MSH_ARC_0027_0059_A-501.dgn

THE INFORMATION, INCLUDING ESTIMATED QUANTITIES OF WORK, SHOWN ON THESE SHEETS IS BASED ON LIMITED INVESTIGATIONS BY THE STATE AND IS IN NO WAY WARRANTED TO INDICATE THE CONDITIONS OF ACTUAL QUANTITIES OF WORK WHICH WILL BE REQUIRED.

Date Plotted: October 01, 2014

DESIGNER/DRAFTER: D. Tudryn / R. Wright

CHECKED BY: D. TUDRYN

SCALE AS NOTED

STATE OF CONNECTICUT
DEPARTMENT OF TRANSPORTATION

ENGINEER: BAKER ENGINEERING

APPROVED BY:

DATE:

PROJECT TITLE:

SHORE LINE EAST RAILROAD STATIONS

TOWN: **CLINTON**

DRAWING TITLE: **ROOF DETAILS - 2**

PROJECT NO. **310-0059**

DRAWING NO. **A-501**

SHEET NO. **04.32**

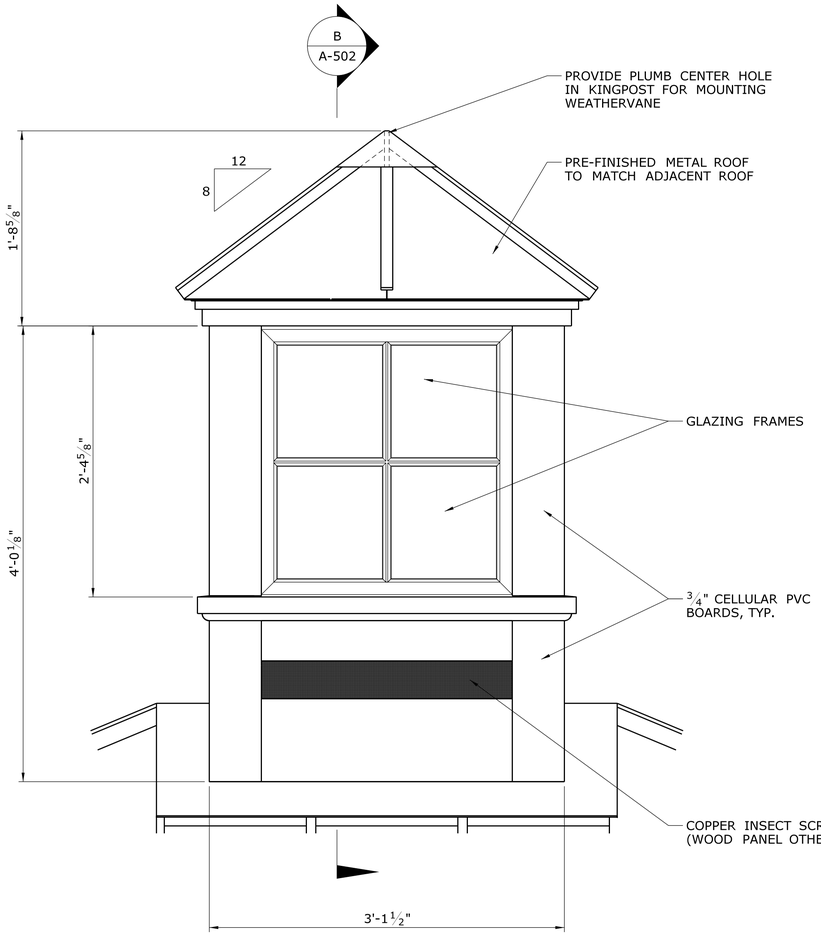

NOTES:

1. CUPOLA FRAME TO BE CONSTRUCTED FROM #2 OR BETTER SPF, PRIMED ON ALL SIDES.
2. CUPOLA EXTERIOR TO BE CONSTRUCTED FROM CELLULAR PVC TRIM. USE POCKET JOINERY AND/OR BISCUITS FOR CONSTRUCTION.
3. USE ONLY STAINLESS STEEL FASTENERS THROUGHOUT.
4. CAULK ALL JOINTS PRIOR TO PAINTING.

CUPOLA DETAIL — A / A-502
SCALE: 1 1/2"=1'-0"

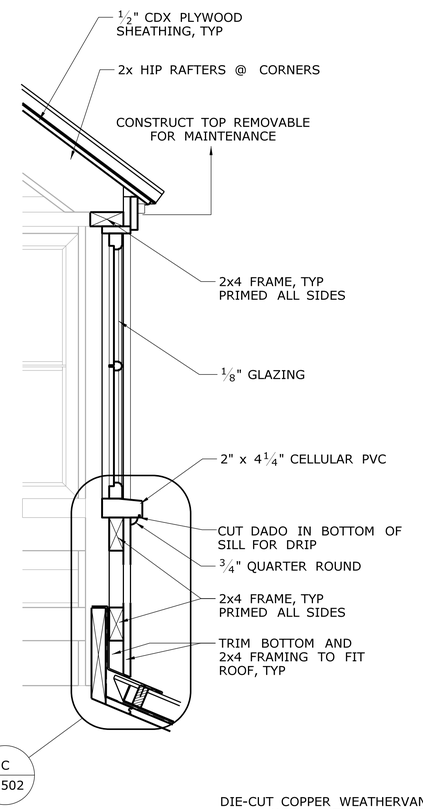

SECTION — B / A-502
SCALE: 1 1/2"=1'-0"

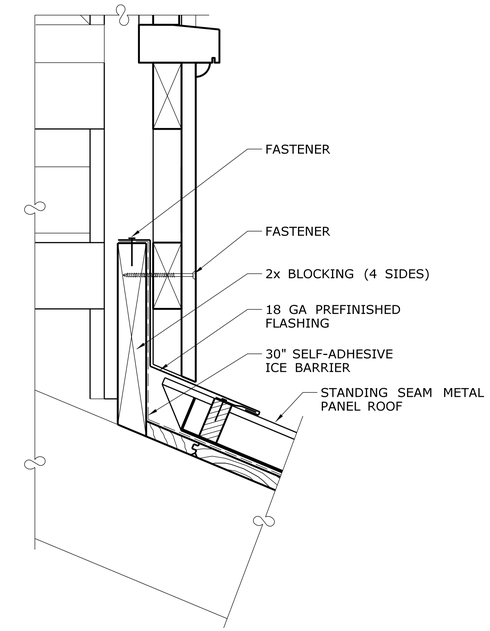

ROOF DETAIL @ CUPOLA — C / A-502
SCALE: 3"=1'-0"

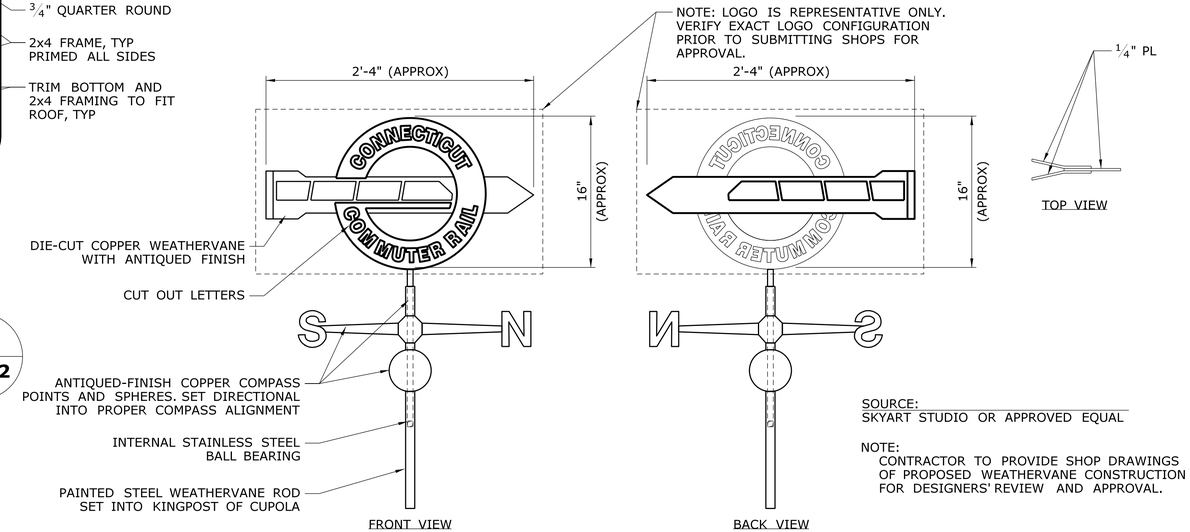

SOURCE:
SKYART STUDIO OR APPROVED EQUAL

NOTE:
CONTRACTOR TO PROVIDE SHOP DRAWINGS OF PROPOSED WEATHERVANE CONSTRUCTION FOR DESIGNERS' REVIEW AND APPROVAL.

WEATHERVANE — D / A-502
SCALE: 1 1/2"=1'-0"

REV.	DATE	REVISION DESCRIPTION	SHEET NO.

Filename: FD_MSH_ARC_0027_0059_A-502.dgn

THE INFORMATION, INCLUDING ESTIMATED QUANTITIES OF WORK, SHOWN ON THESE SHEETS IS BASED ON LIMITED INVESTIGATIONS BY THE STATE AND IS IN NO WAY WARRANTED TO INDICATE THE CONDITIONS OF ACTUAL QUANTITIES OF WORK WHICH WILL BE REQUIRED.

Date Plotted: 3/19/2008

DESIGNER/DRAFTER: D. Tudryn / R. Wright
CHECKED BY: D. TUDRYN
SCALE AS NOTED

STATE OF CONNECTICUT
DEPARTMENT OF TRANSPORTATION

ENGINEER: BAKER ENGINEERING
APPROVED BY: -
DATE: -

PROJECT TITLE:
SHORE LINE EAST RAILROAD STATIONS

TOWN: WESTBROOK

DRAWING TITLE: ROOF DETAILS - 3

PROJECT NO. 310-0048
DRAWING NO. A-502
SHEET NO. 04.33

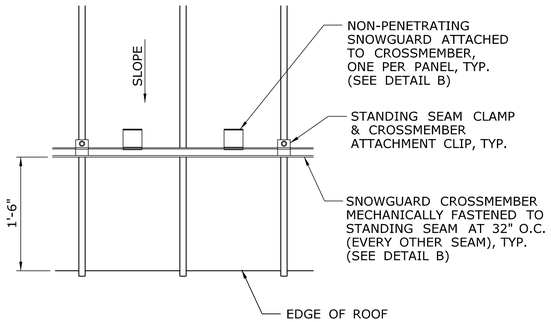

TYPICAL SNOWGUARD DETAIL — A / A-120

SCALE: 1"=1'-0"

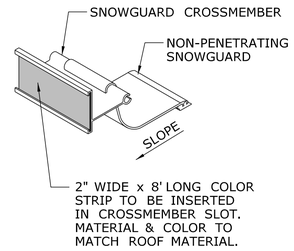

DETAIL — B / A-503

SCALE: N.T.S.

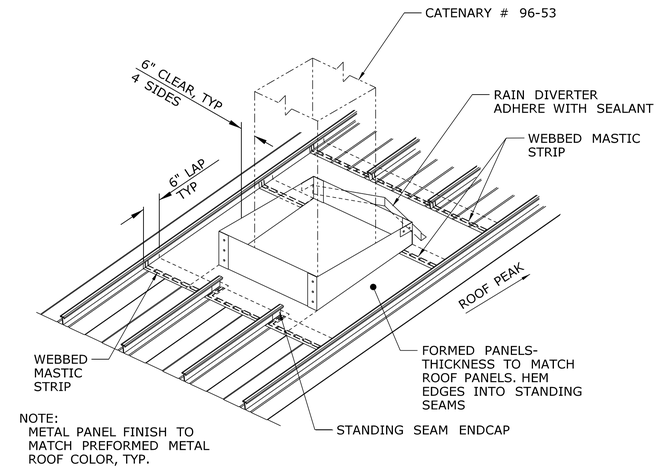

CATENARY PENETRATION DETAIL — C / A-120

SCALE: N.T.S.

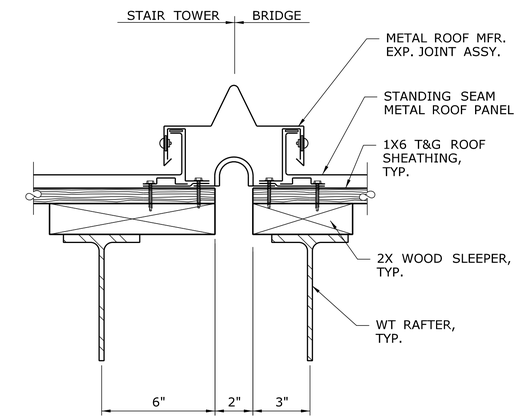

BRIDGE ROOF EXP. JOINT DETAIL — D / A-302

SCALE: 3"=1'-0"

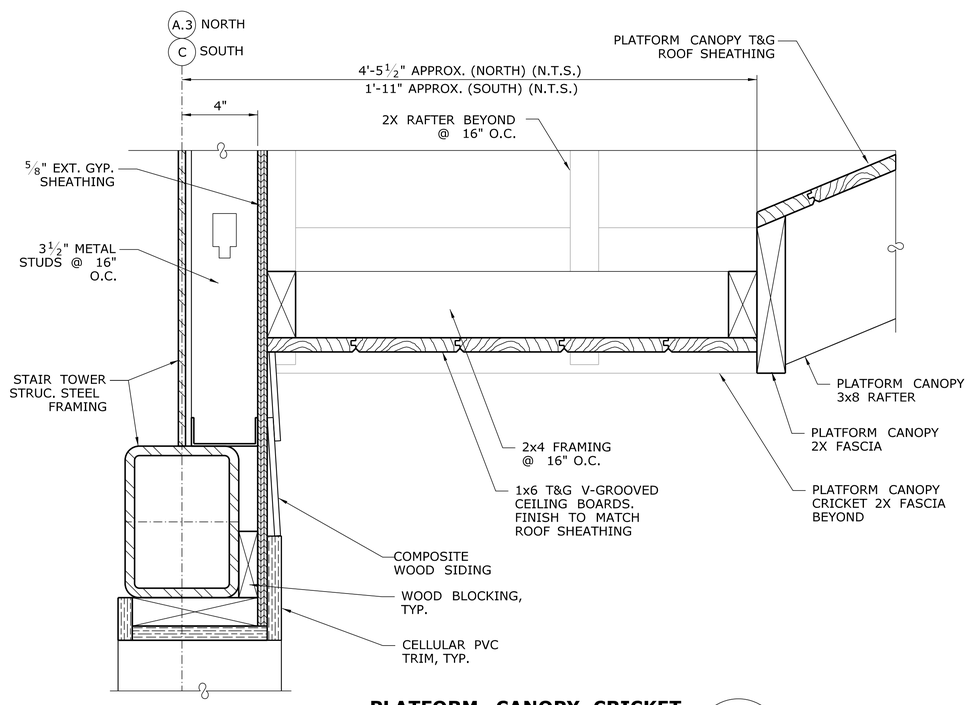

PLATFORM CANOPY CRICKET TO STAIR TOWER DETAIL - 1 — E / A-302

SCALE: 3"=1'-0"

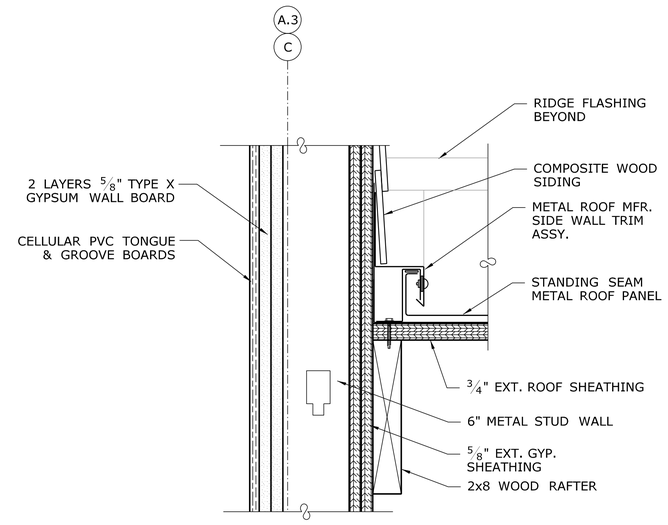

PLATFORM CANOPY CRICKET TO STAIR TOWER DETAIL - 2 — F / A-302

SCALE: 3"=1'-0"

REV.	DATE	REVISION DESCRIPTION	SHEET NO.

Filename: FD_MSH_ARC_0027_0059_A-503.dgn

THE INFORMATION, INCLUDING ESTIMATED QUANTITIES OF WORK, SHOWN ON THESE SHEETS IS BASED ON LIMITED INVESTIGATIONS BY THE STATE AND IS IN NO WAY WARRANTED TO INDICATE THE CONDITIONS OF ACTUAL QUANTITIES OF WORK WHICH WILL BE REQUIRED.

Date Plotted: October 01, 2014

DESIGNER/DRAFTER: D. TUDRYN / R. WRIGHT

CHECKED BY: D. TUDRYN

SCALE AS NOTED

STATE OF CONNECTICUT
DEPARTMENT OF TRANSPORTATION

ENGINEER: BAKER ENGINEERING

APPROVED BY:

DATE:

PROJECT TITLE:

SHORE LINE EAST RAILROAD STATIONS

TOWN: **CLINTON**

DRAWING TITLE: **ROOF DETAILS - 4**

PROJECT NO. **310-0059**

DRAWING NO. **A-503**

SHEET NO. **04.34**

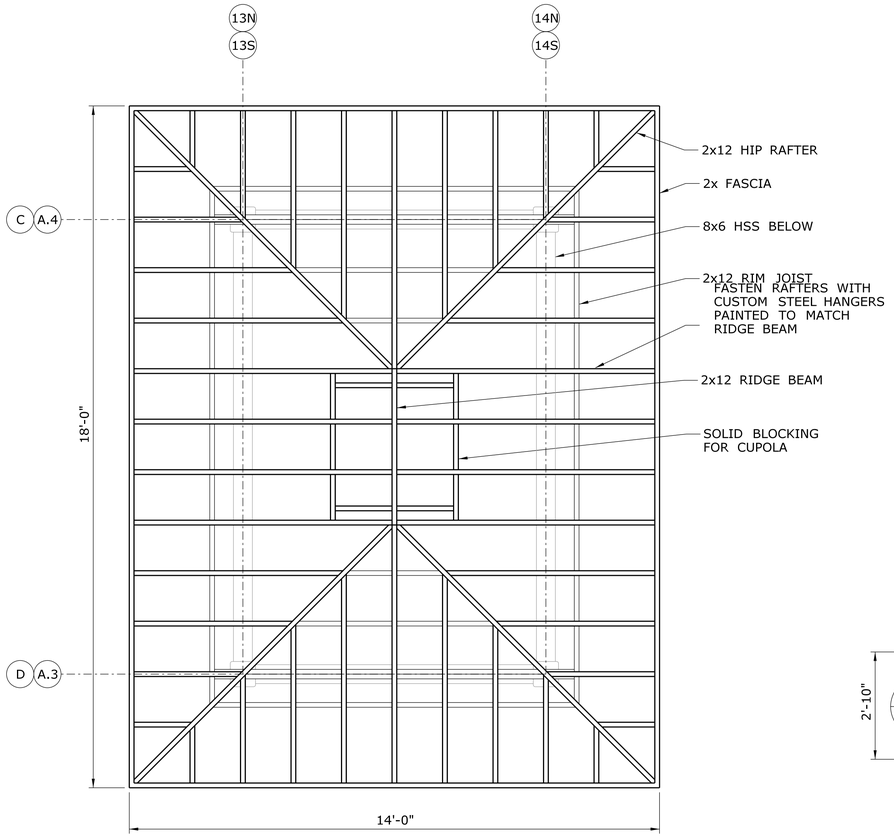

ELEVATOR ROOF FRAMING — A / A-504

SCALE: ½"=1'-0"

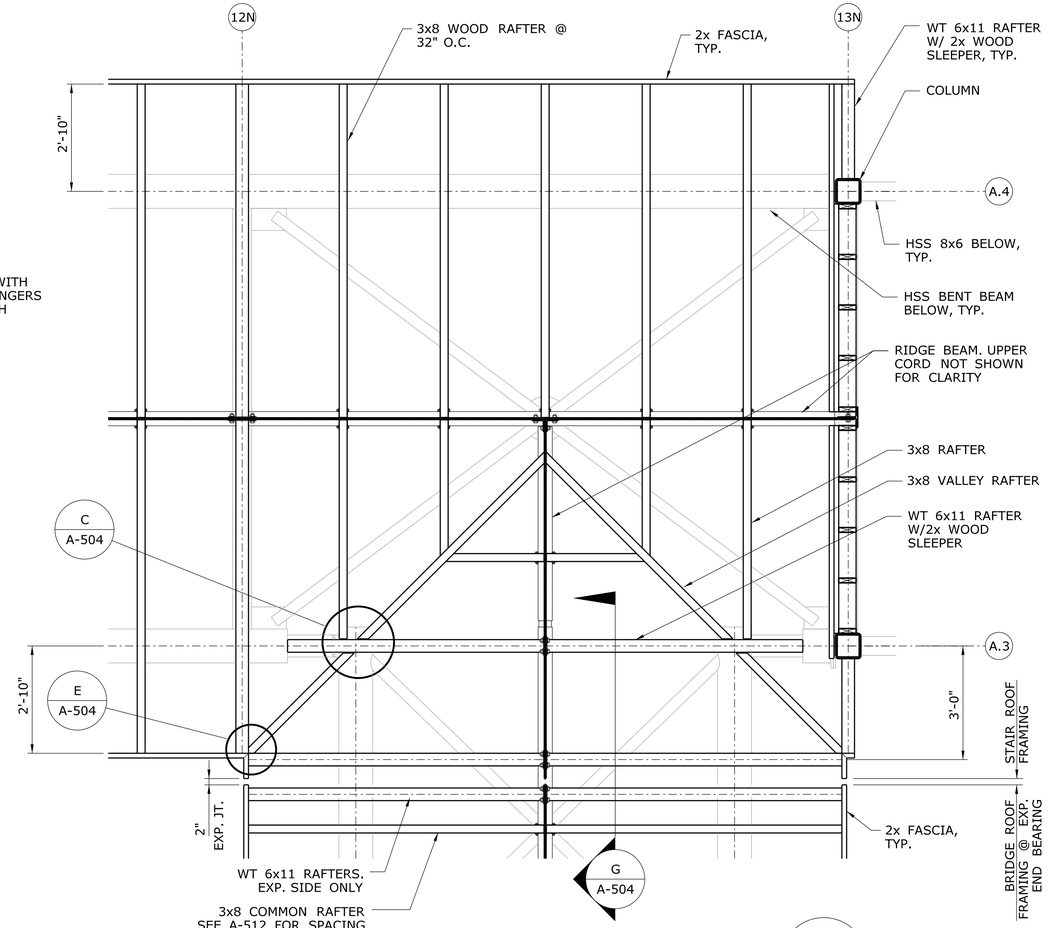

STAIR/BRIDGE ROOF FRAMING — B / A-504

SCALE: ½"=1'-0"

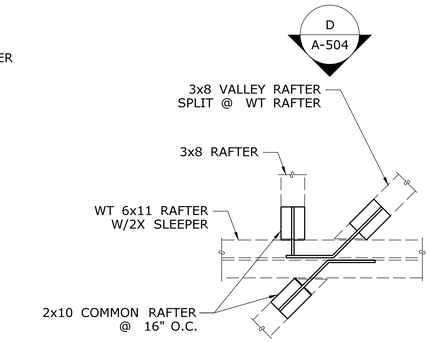

BRACKET DETAIL — C / A-504

SCALE: 1½"=1'-0"

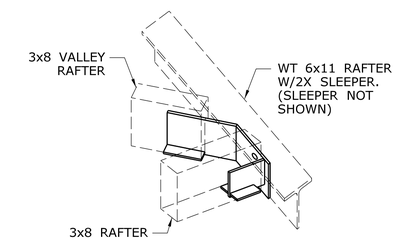

BRACKET DETAIL — D / A-504

SCALE: N.T.S.

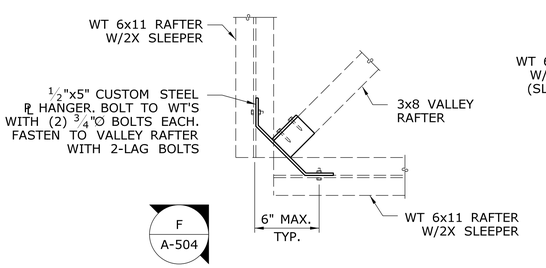

BRACKET DETAIL — E / A-504

SCALE: 1"=1'-0"

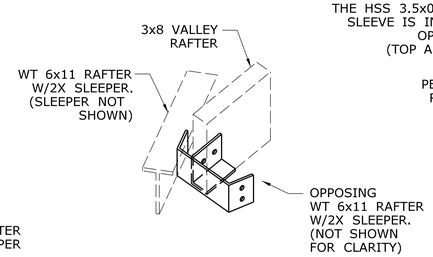

BRACKET DETAIL — F / A-504

SCALE: N.T.S.

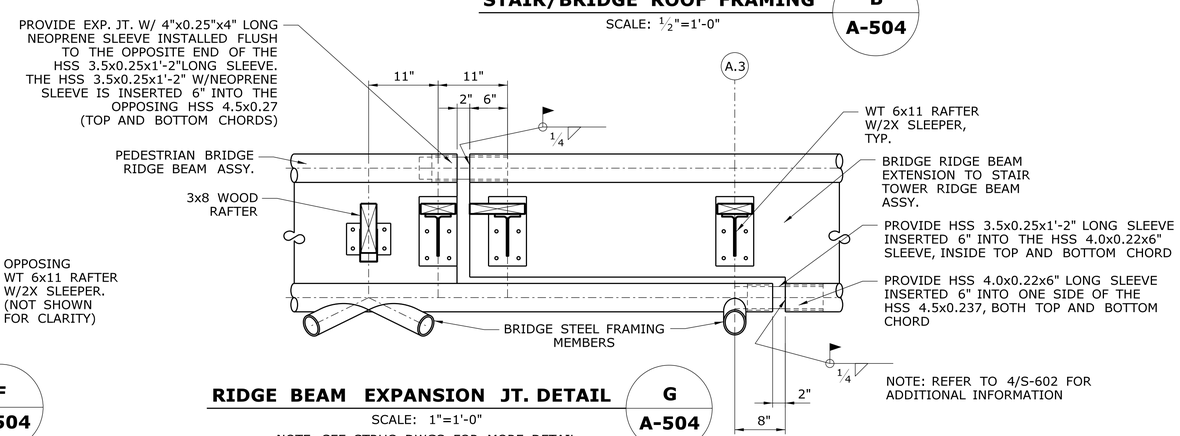

RIDGE BEAM EXPANSION JT. DETAIL — G / A-504

SCALE: 1"=1'-0"

NOTE: SEE STRUC. DWGS FOR MORE DETAIL

REV.	DATE	REVISION DESCRIPTION	SHEET NO.

Filename: FD_MSH_ARC_0027_0059_A-504.dgn

THE INFORMATION, INCLUDING ESTIMATED QUANTITIES OF WORK, SHOWN ON THESE SHEETS IS BASED ON LIMITED INVESTIGATIONS BY THE STATE AND IS IN NO WAY WARRANTED TO INDICATE THE CONDITIONS OF ACTUAL QUANTITIES OF WORK WHICH WILL BE REQUIRED.

Date Plotted: October 01, 2014

DESIGNER/DRAFTER: D. TUDRYN / R. WRIGHT

CHECKED BY: D. TUDRYN

SCALE AS NOTED

STATE OF CONNECTICUT
DEPARTMENT OF TRANSPORTATION

ENGINEER: BAKER ENGINEERING

APPROVED BY: DATE:

STATE OF CONNECTICUT — COLLIN C. BAKER — No. 19079 — LICENSED PROFESSIONAL ENGINEER

PROJECT TITLE:

SHORE LINE EAST RAILROAD STATIONS

TOWN: **CLINTON**

DRAWING TITLE: **ROOF FRAMING DETAILS**

PROJECT NO. **310-0059**

DRAWING NO. **A-504**

SHEET NO. **04.35**

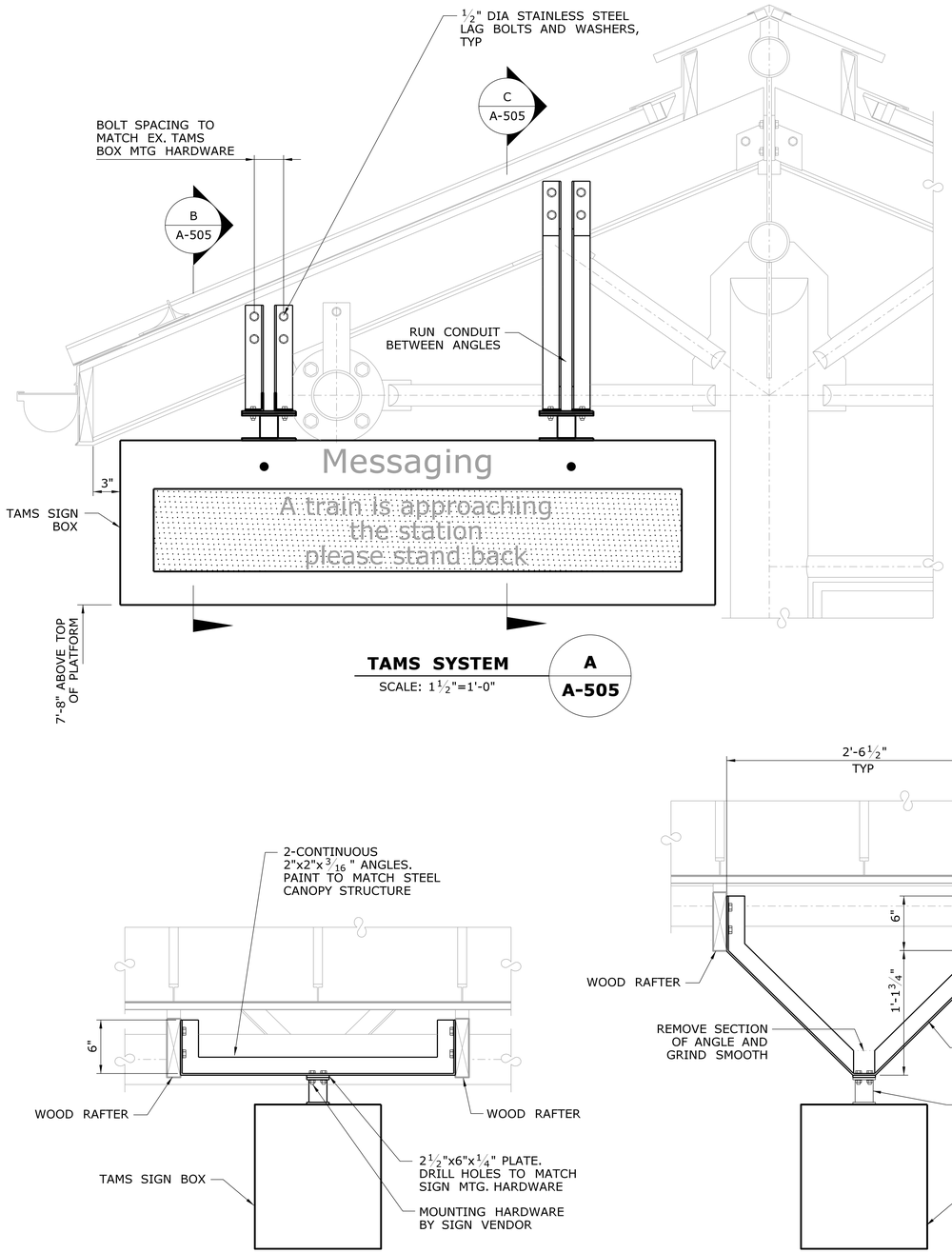

TAMS SYSTEM — SCALE: 1½"=1'-0" — A / A-505

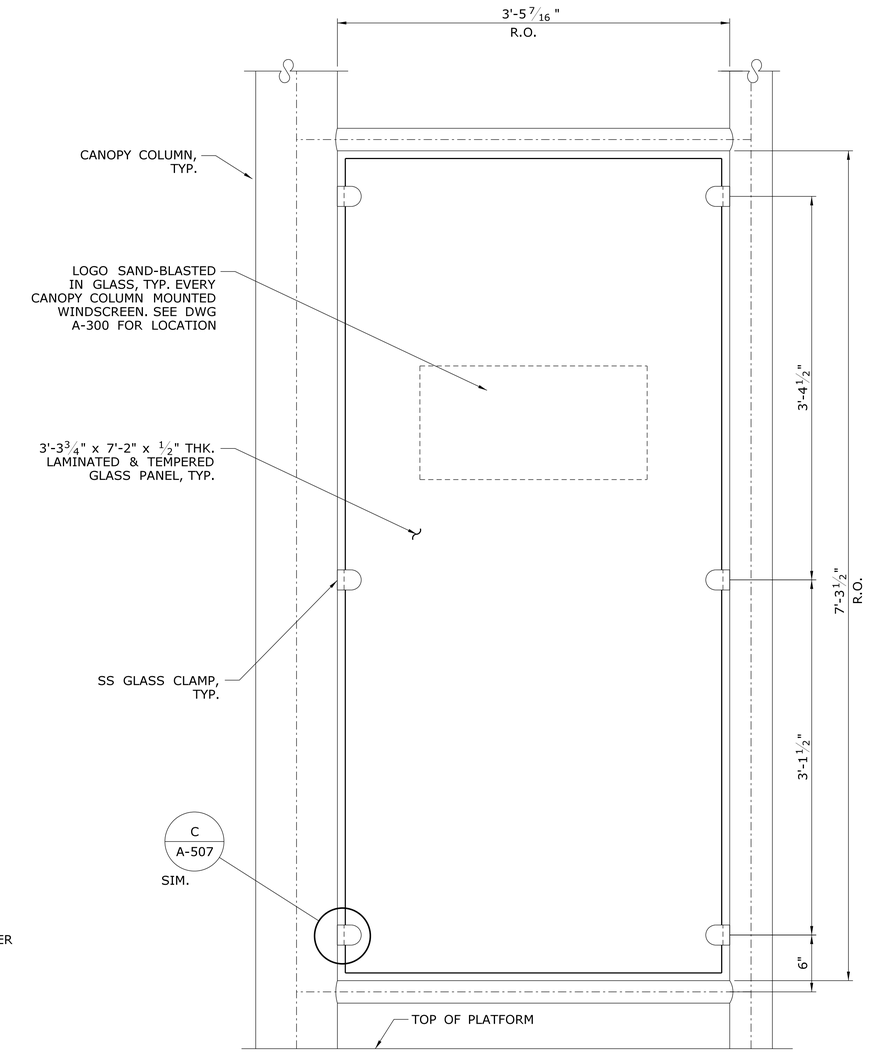

CANOPY WINDSCREEN DETAIL — SCALE: 1½"=1'-0" — D / A-505

SECTION — SCALE: 1½"=1'-0" — B / A-505

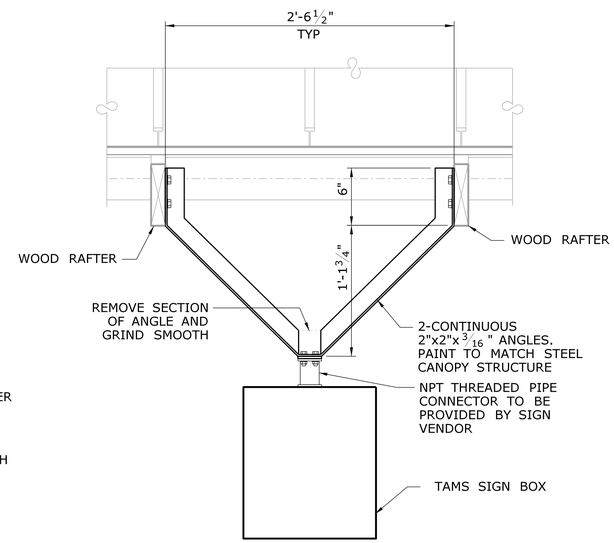

SECTION — SCALE: 1½"=1'-0" — C / A-505

REV.	DATE	REVISION DESCRIPTION	SHEET NO.

Filename: FD_MSH_ARC_0027_0059_A-505.dgn

THE INFORMATION, INCLUDING ESTIMATED QUANTITIES OF WORK, SHOWN ON THESE SHEETS IS BASED ON LIMITED INVESTIGATIONS BY THE STATE AND IS IN NO WAY WARRANTED TO INDICATE THE CONDITIONS OF ACTUAL QUANTITIES OF WORK WHICH WILL BE REQUIRED.

Date Plotted: October 01, 2014

DESIGNER/DRAFTER: D. Tudryn / R. Wright
CHECKED BY: D.TUDRYN
SCALE AS NOTED

STATE OF CONNECTICUT
DEPARTMENT OF TRANSPORTATION

ENGINEER: BAKER ENGINEERING
APPROVED BY:
DATE:

PROJECT TITLE: **SHORE LINE EAST RAILROAD STATIONS**

TOWN: **CLINTON**

DRAWING TITLE: **MISCELLANEOUS DETAILS - 1**

PROJECT NO. **310-0059**
DRAWING NO. **A-505**
SHEET NO. **04.36**

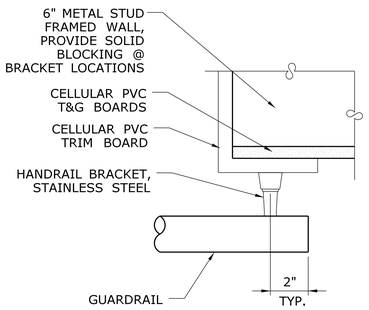

PLAN

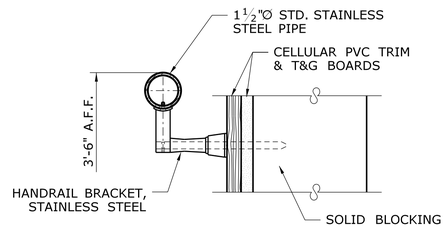

SECTION

WINDOW GUARDRAIL DETAIL — A / A-302

SCALE: 3"=1'-0"

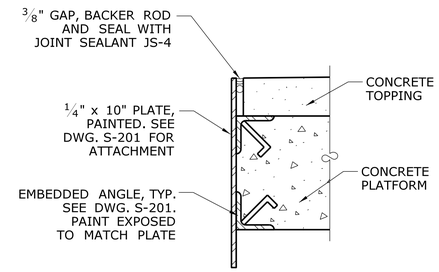

PLATFORM BACK EDGE — B / A-300

SCALE: 3"=1'-0"

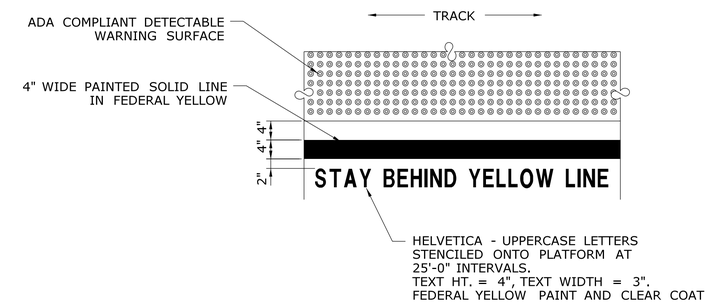

WARNING MARKING DETAIL — C / A-100 — C / A-400

SCALE: 3/4"=1'-0"

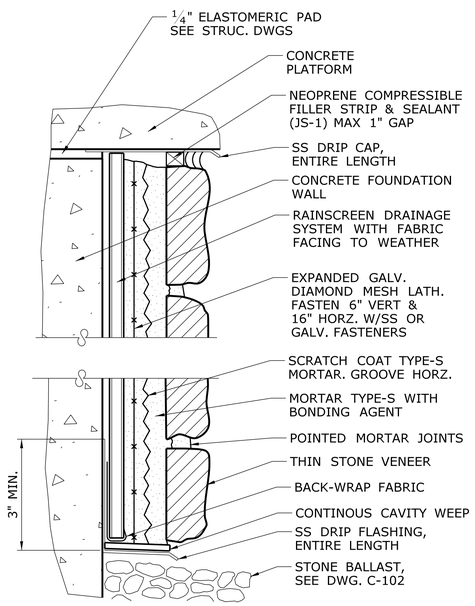

STONE VENEER DETAIL - PLATFORM WALLS — D / A-506

SCALE: N.T.S.

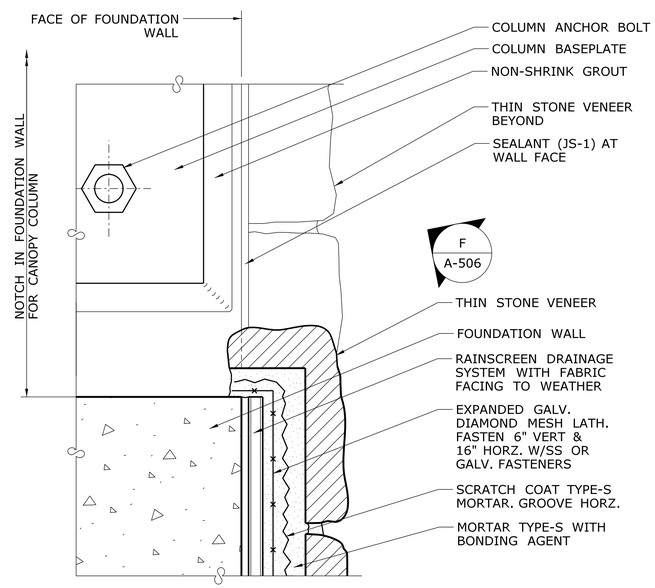

STONE VENEER DETAIL - PLAN @ CANOPY COLUMN — E / A-506

SCALE: N.T.S.

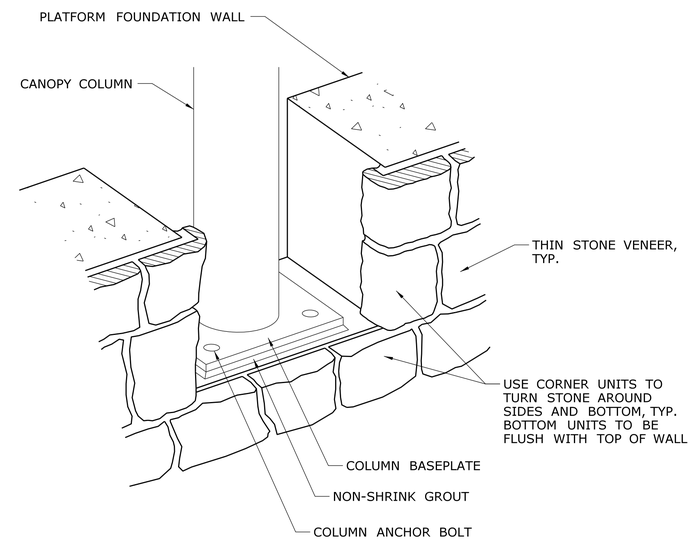

STONE VENEER DETAIL - @ CANOPY COLUMN — F / A-506

SCALE: N.T.S.

REV.	DATE	REVISION DESCRIPTION	SHEET NO.

Filename: FD_MSH_ARC_0027_0059_A-506.dgn

THE INFORMATION, INCLUDING ESTIMATED QUANTITIES OF WORK, SHOWN ON THESE SHEETS IS BASED ON LIMITED INVESTIGATIONS BY THE STATE AND IS IN NO WAY WARRANTED TO INDICATE THE CONDITIONS OF ACTUAL QUANTITIES OF WORK WHICH WILL BE REQUIRED.

Date Plotted: October 01, 2014

DESIGNER/DRAFTER: D. TUDRYN / R. WRIGHT

CHECKED BY: D. TUDRYN

SCALE AS NOTED

STATE OF CONNECTICUT
DEPARTMENT OF TRANSPORTATION

ENGINEER: BAKER ENGINEERING

APPROVED BY: DATE:

PROJECT TITLE: **SHORE LINE EAST RAILROAD STATIONS**

TOWN: **CLINTON**

DRAWING TITLE: **MISCELLANEOUS DETAILS - 2**

PROJECT NO. **310-0059**

DRAWING NO. **A-506**

SHEET NO. **04.37**

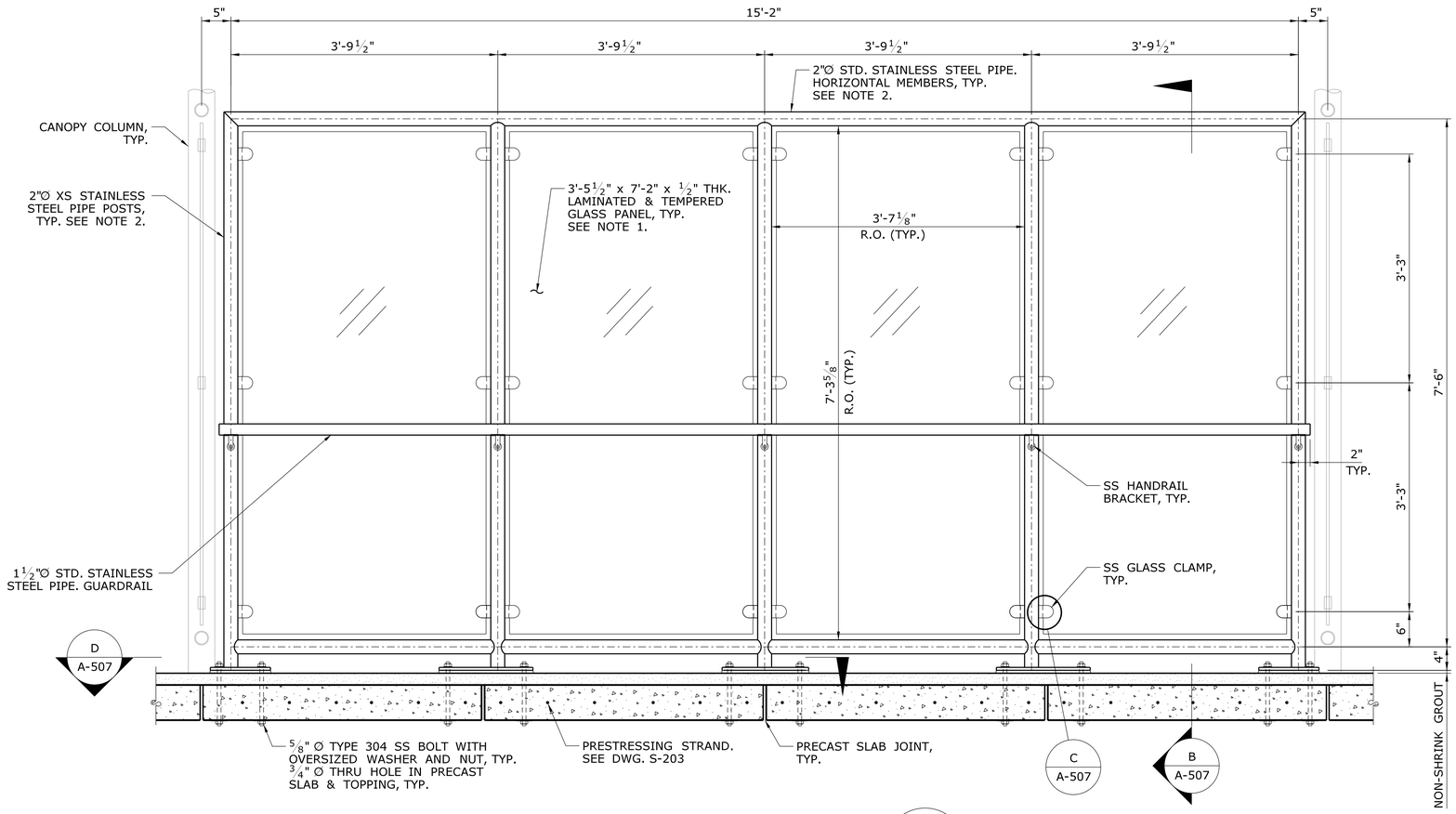

GUARDRAIL WINDSCREEN ELEVATION — A / A-507

SCALE: 1"=1'-0"

NOTE: VIEW FROM TRACK SIDE

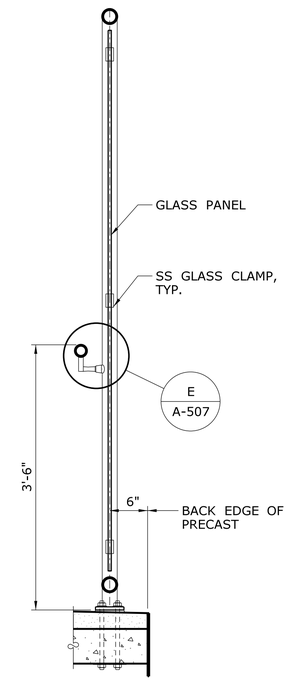

SECTION — B / A-507

SCALE: 1"=1'-0"

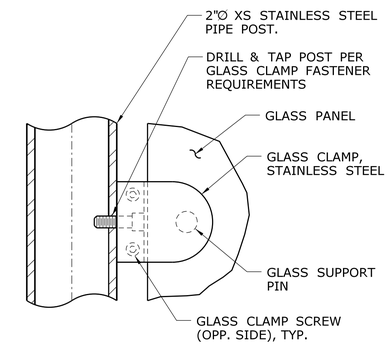

GLASS CLAMP DETAIL — C / A-507, C / A-505

SCALE: 6"=1'-0"

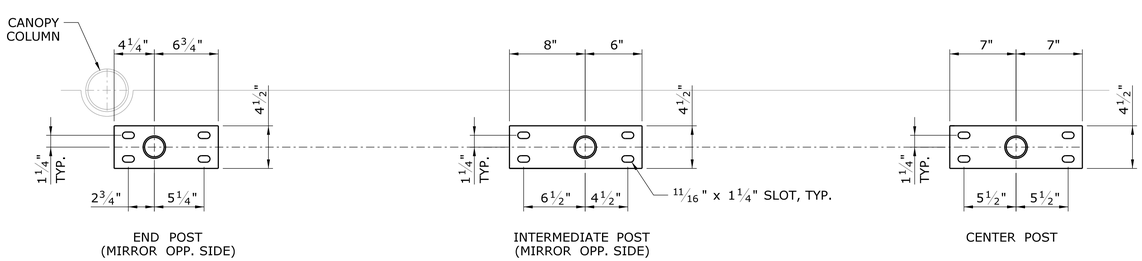

BASEPLATE DETAILS — D / A-507

SCALE: 1½"=1'-0"

NOTE: CONTRATOR TO VERIFY BASEPLATES DO NOT CONFLICT WITH TENDONS IN PRECAST PLANKS

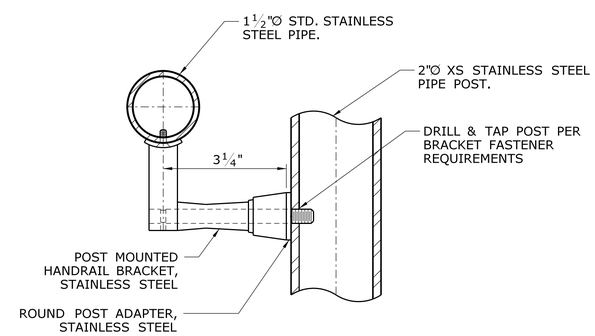

HANDRAIL BRACKET — E / A-507

SCALE: 6"=1'-0"

NOTES:

1. GLASS DIMENSIONS ARE FOR REFERENCE ONLY. FINAL SIZE TO BE DETERMINED BY CONTRACTOR & GLASS MANUFACTURER BASED ON R.O. AND GLASS CLAMPS USED.
2. WELD ALL CONSTRUCTION JOINTS AND GRIND SMOOTH.

REV.	DATE	REVISION DESCRIPTION	SHEET NO.

Filename: FD_MSH_ARC_0027_0059_A-507.dgn

THE INFORMATION, INCLUDING ESTIMATED QUANTITIES OF WORK, SHOWN ON THESE SHEETS IS BASED ON LIMITED INVESTIGATIONS BY THE STATE AND IS IN NO WAY WARRANTED TO INDICATE THE CONDITIONS OF ACTUAL QUANTITIES OF WORK WHICH WILL BE REQUIRED.

Date Plotted: 3/19/2008

DESIGNER/DRAFTER: D. Tudryn / R. Wright

CHECKED BY: D. TUDRYN

SCALE AS NOTED

STATE OF CONNECTICUT
DEPARTMENT OF TRANSPORTATION

ENGINEER: BAKER ENGINEERING

APPROVED BY: -

DATE: -

STATE OF CONNECTICUT — DEPARTMENT OF TRANSPORTATION — No. 19079 — LICENSED PROFESSIONAL ENGINEER

PROJECT TITLE:

SHORE LINE EAST RAILROAD STATIONS

TOWN: **WESTBROOK**

DRAWING TITLE: **GUARDRAIL WINDSCREEN DETAILS**

PROJECT NO. **310-0048**

DRAWING NO. **A-507**

SHEET NO. **04.38**

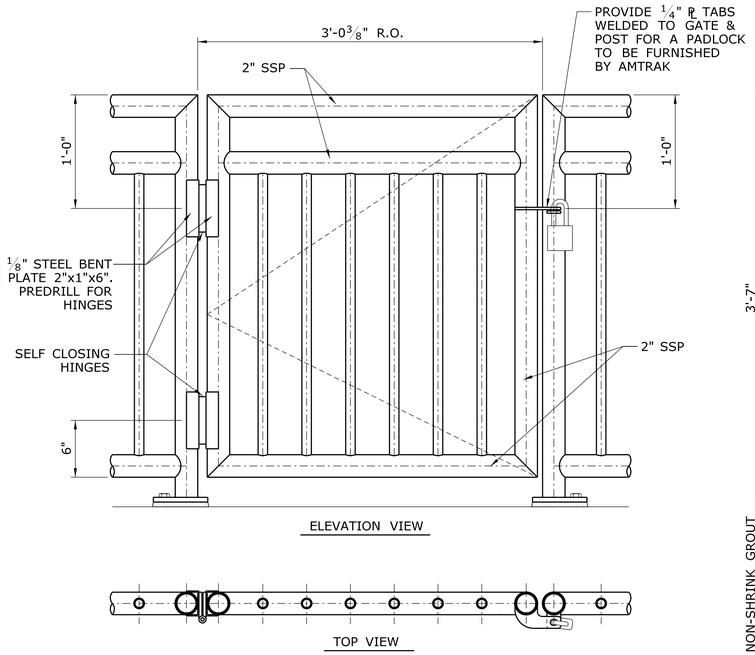

GATE — SCALE: 1 1/2"=1'-0" — **A / A-300**

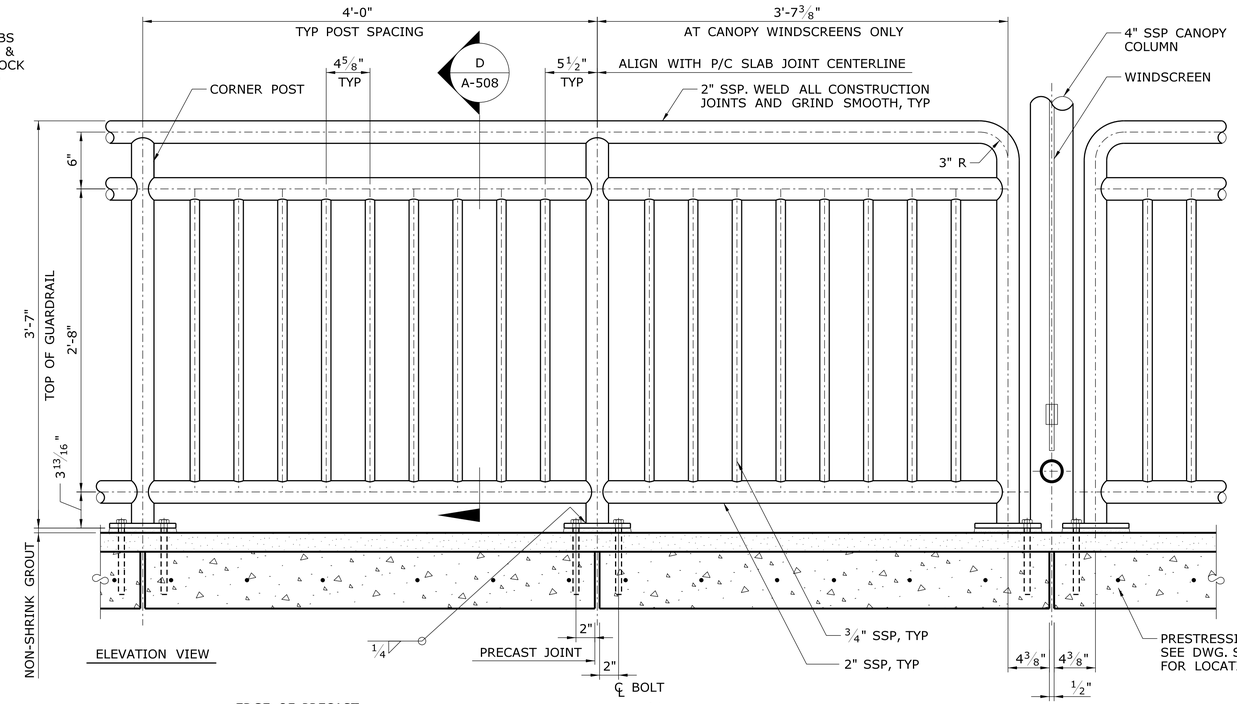

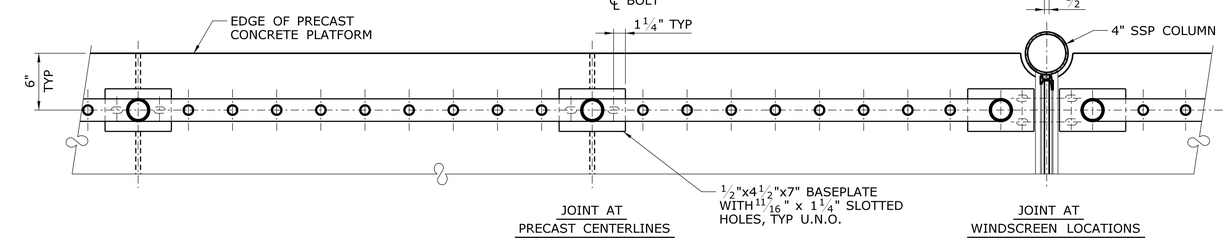

GUARDRAIL — SCALE: 1 1/2"=1'-0" — **B / A-508**

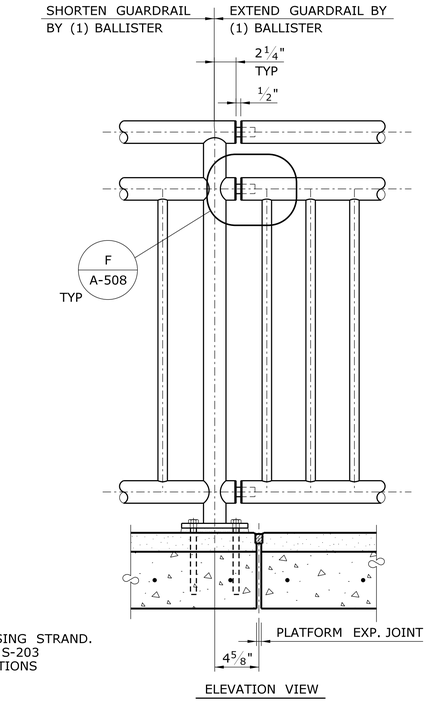

EXPANSION JT. — SCALE: 1 1/2"=1'-0" — **C / A-508**

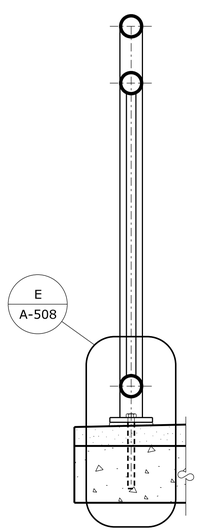

SECTION — SCALE: 1 1/2"=1'-0" — **D / A-508**

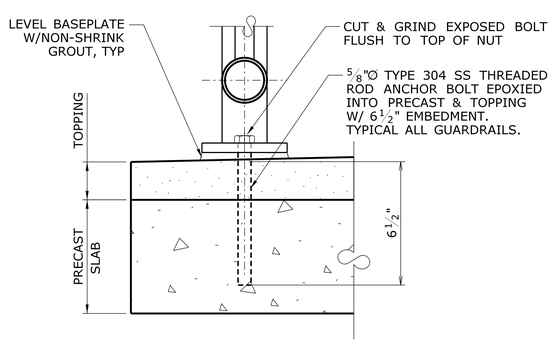

MOUNTING DETAIL — SCALE: 3"=1'-0" — **E / A-508**

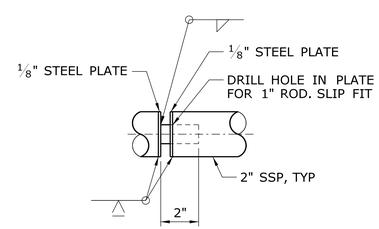

EXP. JOINT DETAIL — SCALE: 3"=1'-0" — **F / A-508**

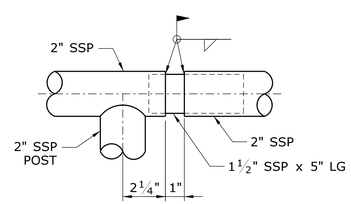

TOP RAIL SPLICE SHOWN. OTHERS SIMILAR

FIELD SPLICE DETAIL — SCALE: 3"=1'-0" — **G / A-508**

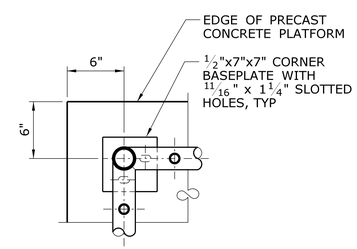

CORNER POST — SCALE: 1 1/2"=1'-0" — **H / A-508**

REV.	DATE	REVISION DESCRIPTION	SHEET NO.

Filename: FD_MSH_ARC_0027_0059_A-508.dgn

THE INFORMATION, INCLUDING ESTIMATED QUANTITIES OF WORK, SHOWN ON THESE SHEETS IS BASED ON LIMITED INVESTIGATIONS BY THE STATE AND IS IN NO WAY WARRANTED TO INDICATE THE CONDITIONS OF ACTUAL QUANTITIES OF WORK WHICH WILL BE REQUIRED.

Date Plotted: October 01, 2014

DESIGNER/DRAFTER: D. Tudryn / R. Wright
CHECKED BY: D. TUDRYN
SCALE AS NOTED

STATE OF CONNECTICUT
DEPARTMENT OF TRANSPORTATION

ENGINEER: BAKER ENGINEERING
APPROVED BY:
DATE:

PROJECT TITLE: SHORE LINE EAST RAILROAD STATIONS

TOWN: CLINTON

DRAWING TITLE: GUARDRAIL DETAILS

PROJECT NO. 310-0059
DRAWING NO. A-508
SHEET NO. 04.39

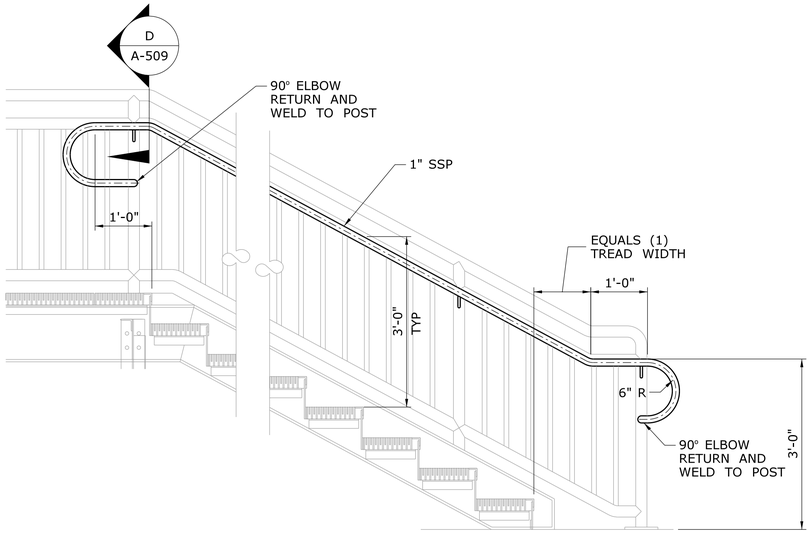

GUARDRAIL MOUNTED HANDRAIL — A / A-509

SCALE: 3/4"=1'-0"

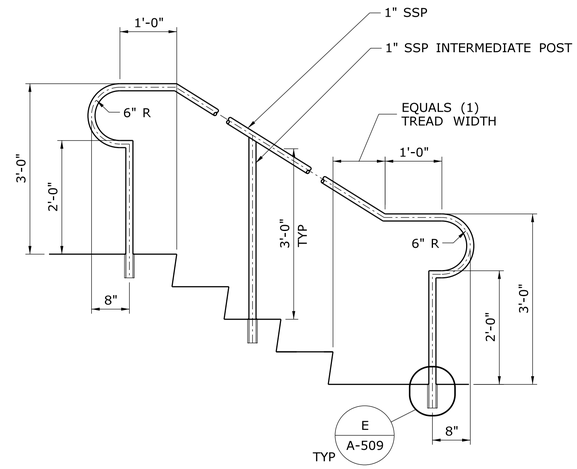

HANDRAIL @ STAIRWAY — B / A-509

SCALE: 3/4"=1'-0"

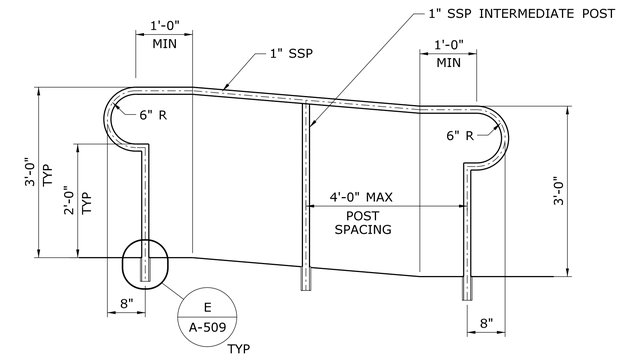

HANDRAIL @ RAMP — C / A-509

SCALE: 3/4"=1'-0"

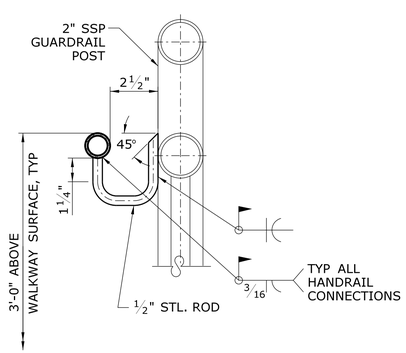

SECTION — D / A-509

SCALE: 3"=1'-0"

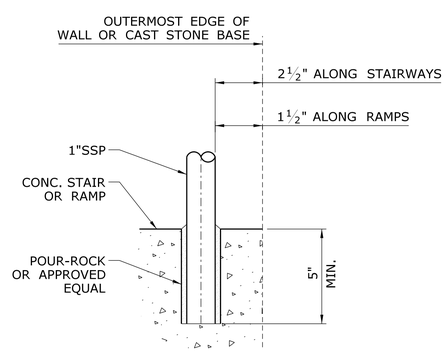

DETAIL — E / A-509

SCALE: 3"=1'-0"

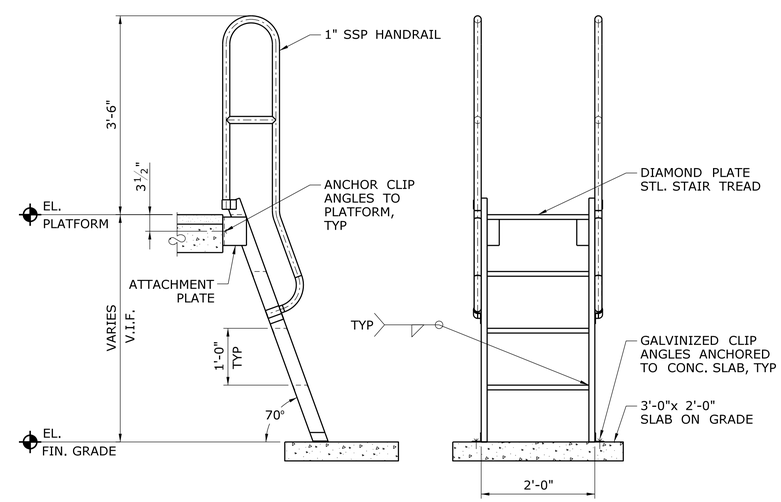

SHIPS LADDER DETAIL — F / A-509

SCALE: 3/4"=1'-0"

REV.	DATE	REVISION DESCRIPTION	SHEET NO.

Filename: FD_MSH_ARC_0027_0059_A-509.dgn

THE INFORMATION, INCLUDING ESTIMATED QUANTITIES OF WORK, SHOWN ON THESE SHEETS IS BASED ON LIMITED INVESTIGATIONS BY THE STATE AND IS IN NO WAY WARRANTED TO INDICATE THE CONDITIONS OF ACTUAL QUANTITIES OF WORK WHICH WILL BE REQUIRED.

Date Plotted: October 01, 2014

DESIGNER/DRAFTER: D. Tudryn / R. Wright

CHECKED BY: D. TUDRYN

SCALE AS NOTED

STATE OF CONNECTICUT
DEPARTMENT OF TRANSPORTATION

ENGINEER: BAKER ENGINEERING

APPROVED BY: DATE:

PROJECT TITLE: **SHORE LINE EAST RAILROAD STATIONS**

TOWN: **CLINTON**

DRAWING TITLE: **HANDRAIL DETAILS**

PROJECT NO. **310-0059**

DRAWING NO. **A-509**

SHEET NO. **04.40**

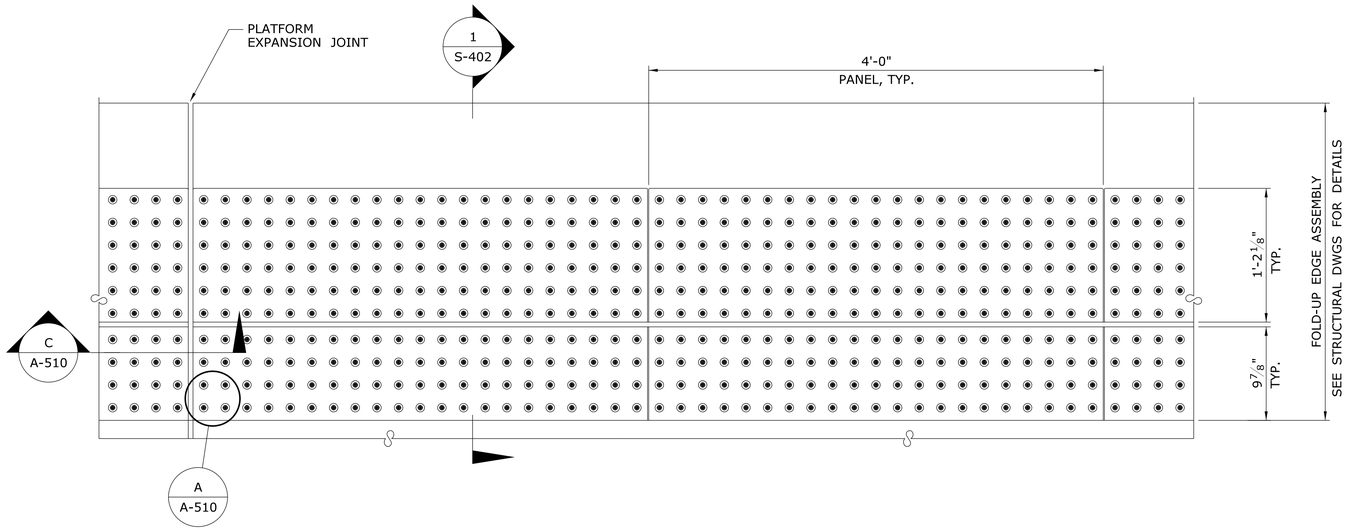

TACTILE SURFACE DETAIL (FOLD-UP EDGE)

SCALE: 1½"=1'-0"

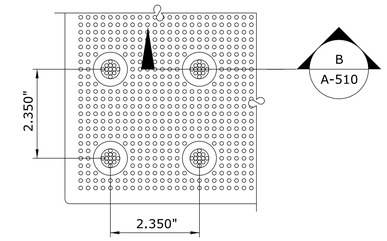

DETAIL A A-510

SCALE: 6"=1'-0"

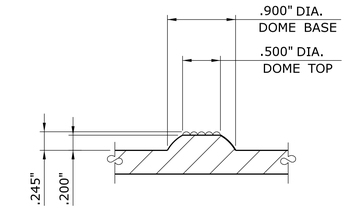

SECTION B A-510

SCALE: FULL

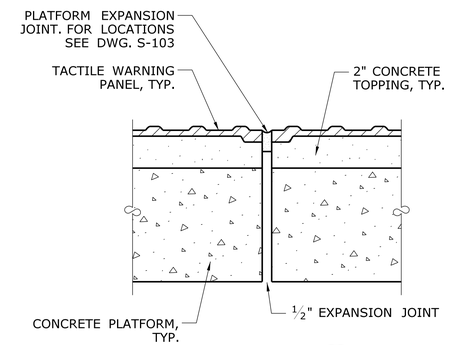

SECTION C A-510

SCALE: 3"=1'-0"

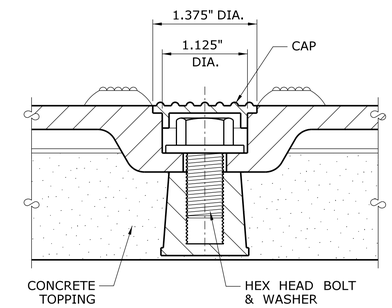

FASTENER DETAIL D A-510

SCALE: FULL

NOTES:

1. INSTALL TACTILE WARNING PANELS PER MANUFACTURERS INSTRUCTIONS.

REV.	DATE	REVISION DESCRIPTION	SHEET NO.

Filename: FD_MSH_ARC_0027_0059_A-510.dgn

THE INFORMATION, INCLUDING ESTIMATED QUANTITIES OF WORK, SHOWN ON THESE SHEETS IS BASED ON LIMITED INVESTIGATIONS BY THE STATE AND IS IN NO WAY WARRANTED TO INDICATE THE CONDITIONS OF ACTUAL QUANTITIES OF WORK WHICH WILL BE REQUIRED.

Date Plotted: March 16, 2011

DESIGNER/DRAFTER: D. Tudryn / R. Wright

CHECKED BY: D. TUDRYN

SCALE AS NOTED

STATE OF CONNECTICUT
DEPARTMENT OF TRANSPORTATION

ENGINEER: BAKER ENGINEERING

APPROVED BY:

DATE: 03/16/2011

PROJECT TITLE:

SHORE LINE EAST RAILROAD STATIONS

TOWN: **WESTBROOK**

DRAWING TITLE: **TACTILE SURFACE DETAILS**

PROJECT NO. **310-0062**

DRAWING NO. **A-510**

SHEET NO. **04.41**

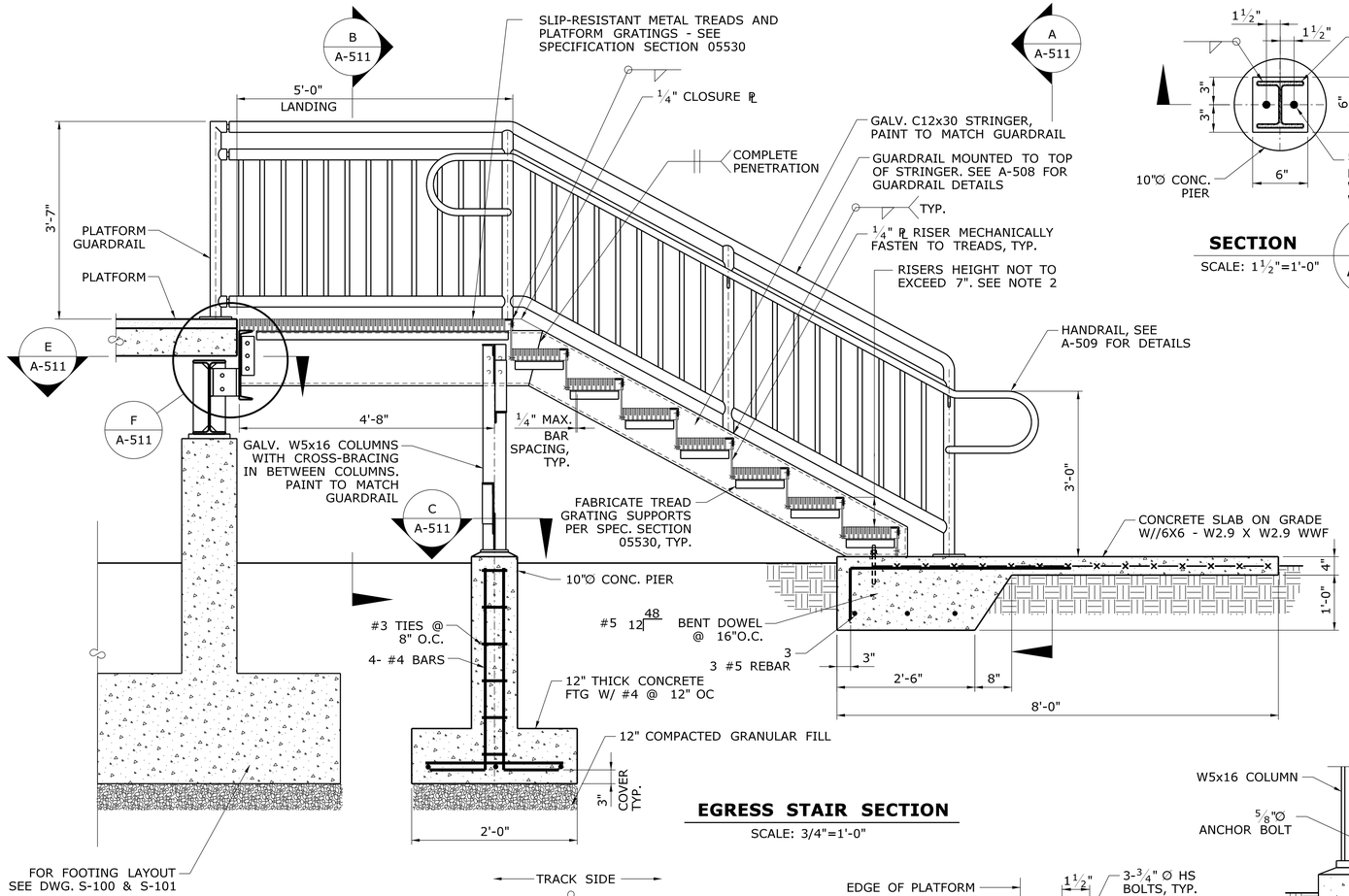

EGRESS STAIR SECTION

SCALE: 3/4"=1'-0"

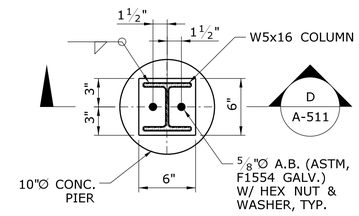

SECTION C A-511

SCALE: 1 1/2"=1'-0"

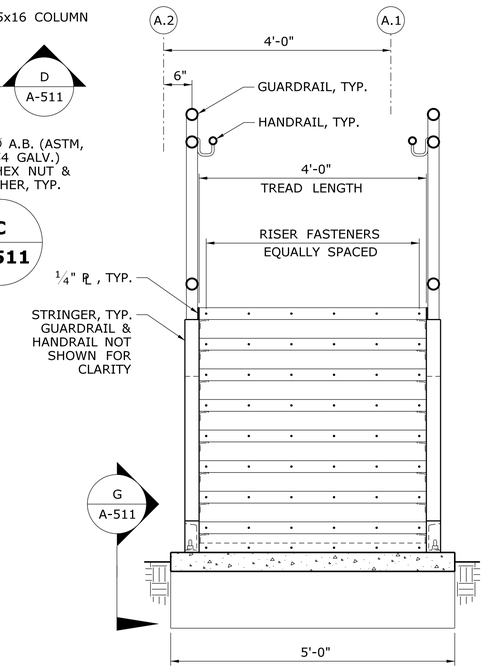

DETAIL A A-511

SCALE: 3/4"=1'-0"

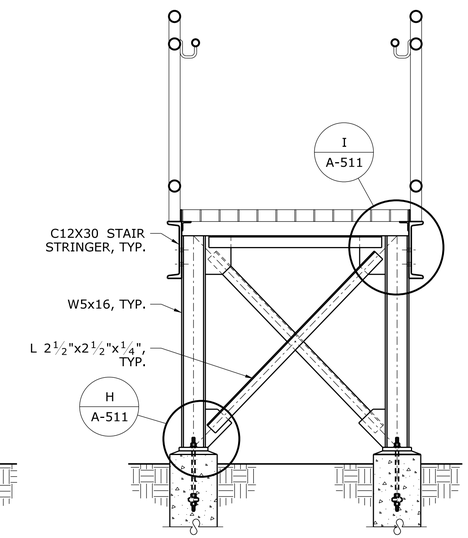

SECTION B A-511

SCALE: 3/4"=1'-0"

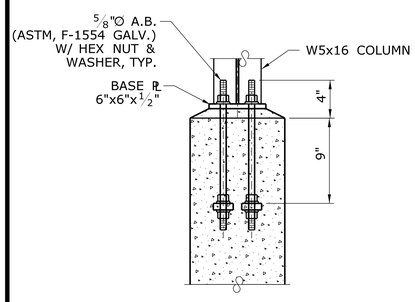

SECTION D A-511

SCALE: 1 1/2"=1'-0"

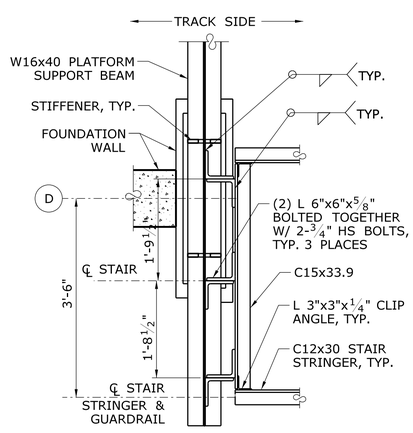

SECTION E A-511

SCALE: 3/4"=1'-0"

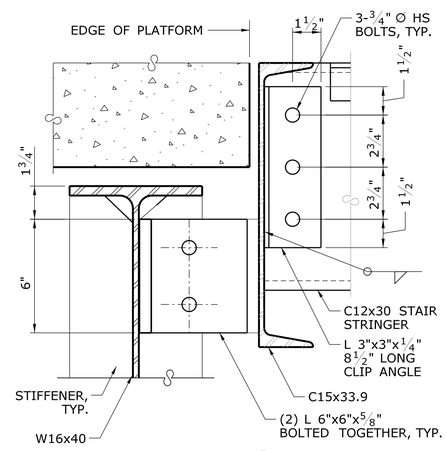

SECTION F A-511

SCALE: 3"=1'-0"

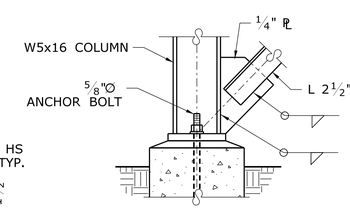

SECTION H A-511

SCALE: 1 1/2"=1'-0"

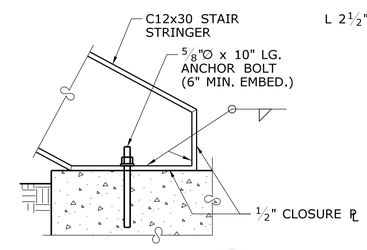

SECTION G A-511

SCALE: 1 1/2"=1'-0"

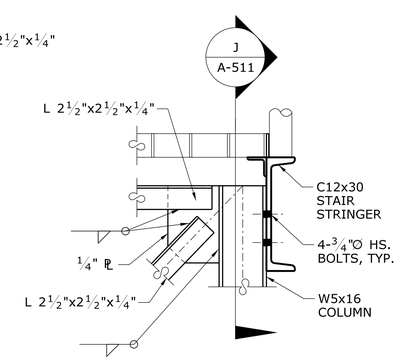

DETAIL I A-511

SCALE: 1 1/2"=1'-0"

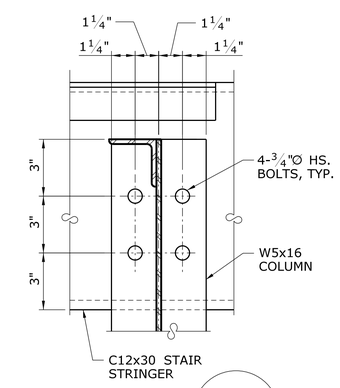

DETAIL J A-511

SCALE: 3"=1'-0"

NOTES:

1. ALL FILLET WELDS TO BE 1/4" U.N.O.
2. CONTRACTOR TO VERIFY ACTUAL TREAD QUANTITIES BASED ON ACTUAL FIELD CONDITIONS.

REV.	DATE	REVISION DESCRIPTION	SHEET NO.

Filename: FD_MSH_ARC_0027_0059_A-511.dgn

THE INFORMATION, INCLUDING ESTIMATED QUANTITIES OF WORK, SHOWN ON THESE SHEETS IS BASED ON LIMITED INVESTIGATIONS BY THE STATE AND IS IN NO WAY WARRANTED TO INDICATE THE CONDITIONS OF ACTUAL QUANTITIES OF WORK WHICH WILL BE REQUIRED.

Date Plotted: October 01, 2014

DESIGNER/DRAFTER: D. Tudryn / R. Wright
CHECKED BY: D. TUDRYN

SCALE AS NOTED

STATE OF CONNECTICUT
DEPARTMENT OF TRANSPORTATION

ENGINEER: BAKER ENGINEERING
APPROVED BY:
DATE:

PROJECT TITLE: SHORE LINE EAST RAILROAD STATIONS

TOWN: CLINTON

DRAWING TITLE: METAL EGRESS STAIR DETAILS

PROJECT NO. 310-0059
DRAWING NO. A-511
SHEET NO. 04.42

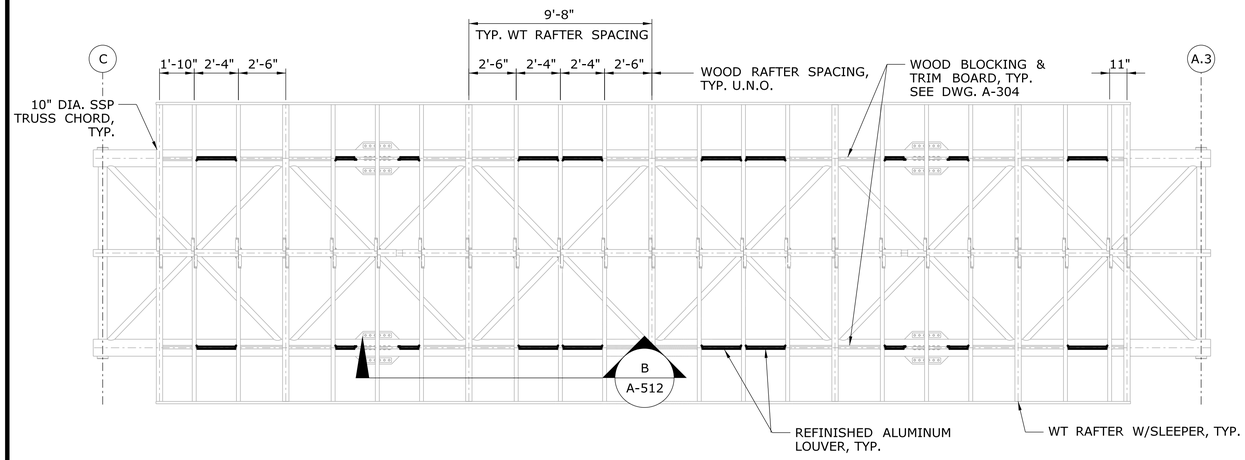

BRIDGE LOUVER LOCATION PLAN — A / A-512

SCALE: 1/4"=1'-0"

ROOF SHEATHING NOT SHOWN FOR CLARITY

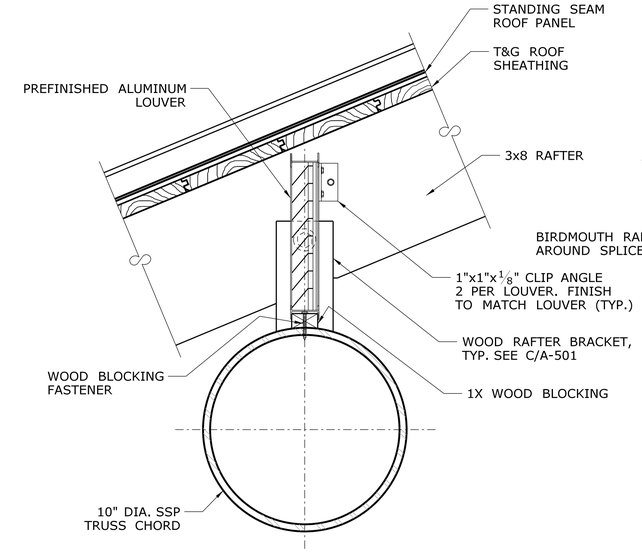

SECTION — C / A-512

SCALE: 3"=1'-0"

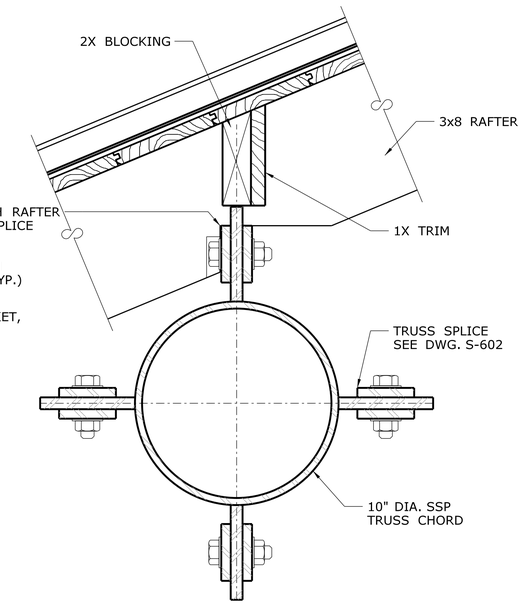

SECTION — D / A-512

SCALE: 3"=1'-0"

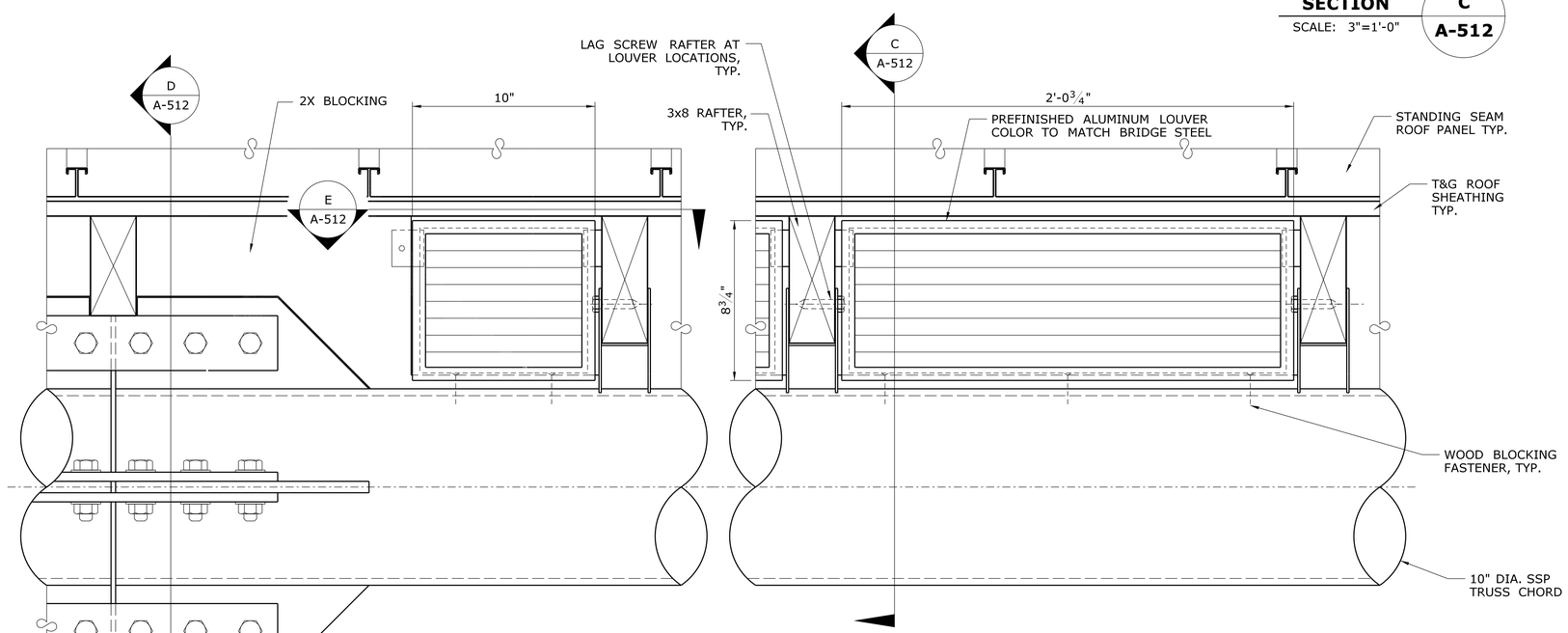

DETAIL — B / A-512

SCALE: 3"=1'-0"

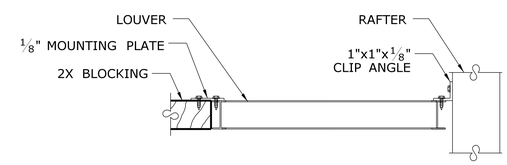

DETAIL — E / A-512

SCALE: 3"=1'-0"

REV.	DATE	REVISION DESCRIPTION	SHEET NO.

Filename: FD_MSH_ARC_0027_0059_A-512.dgn

THE INFORMATION, INCLUDING ESTIMATED QUANTITIES OF WORK, SHOWN ON THESE SHEETS IS BASED ON LIMITED INVESTIGATIONS BY THE STATE AND IS IN NO WAY WARRANTED TO INDICATE THE CONDITIONS OF ACTUAL QUANTITIES OF WORK WHICH WILL BE REQUIRED.

Date Plotted: October 01, 2014

DESIGNER/DRAFTER: D. TUDRYN / R. WRIGHT

CHECKED BY: D. TUDRYN

SCALE AS NOTED

STATE OF CONNECTICUT
DEPARTMENT OF TRANSPORTATION

ENGINEER: BAKER ENGINEERING

APPROVED BY: DATE:

PROJECT TITLE: SHORE LINE EAST RAILROAD STATIONS

TOWN: CLINTON

DRAWING TITLE: PEDESTRIAN BRIDGE DETAILS - 1

PROJECT NO. 310-0059

DRAWING NO. A-512

SHEET NO. 04.43

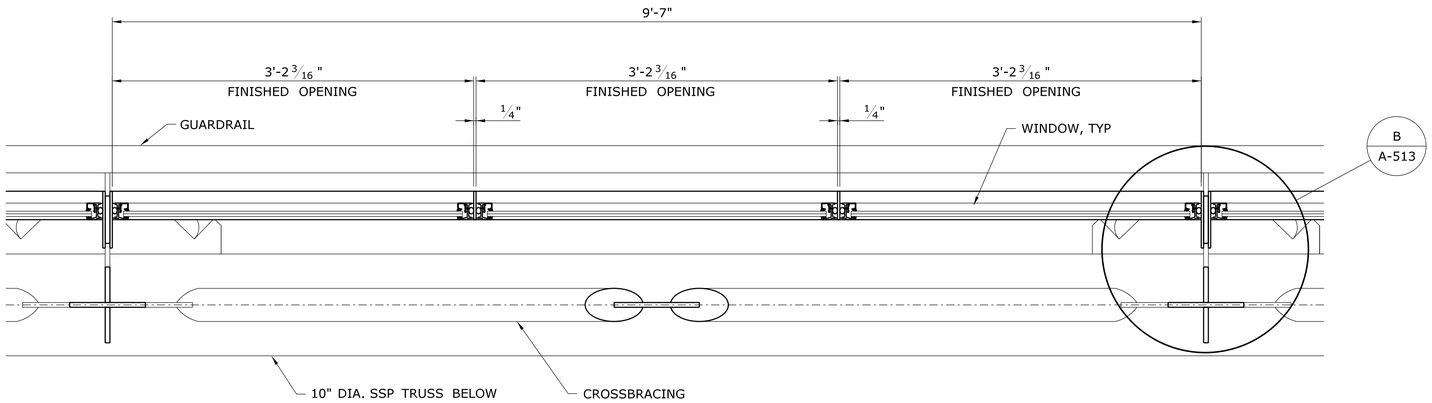

PARTIAL WINDOW PLAN — A / A-101

SCALE: 1½"=1'-0"

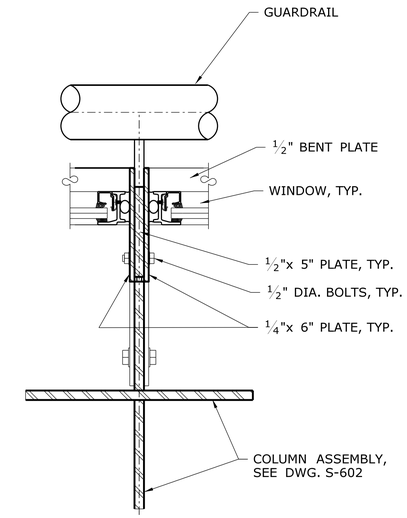

DETAIL — B / A-513

SCALE: 3"=1'-0"

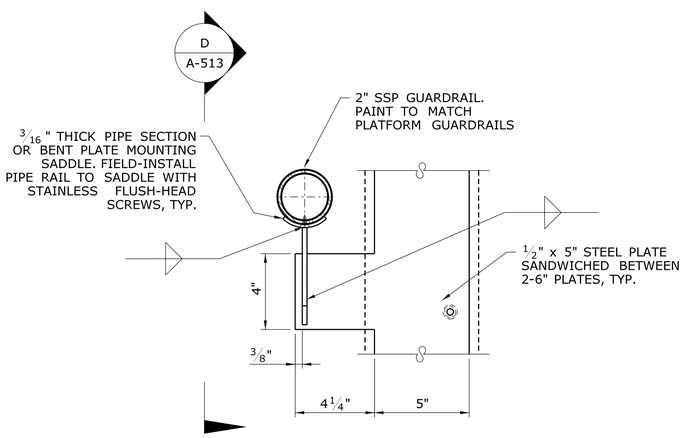

DETAIL — C / A-304

SCALE: 3"=1'-0"

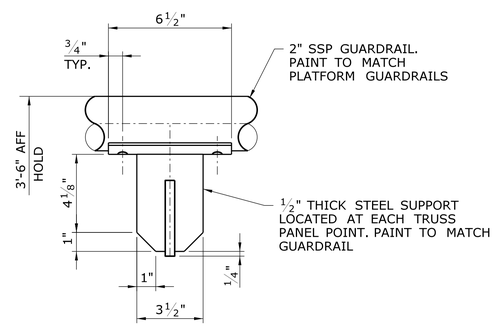

DETAIL — D / A-513

SCALE: 3"=1'-0"

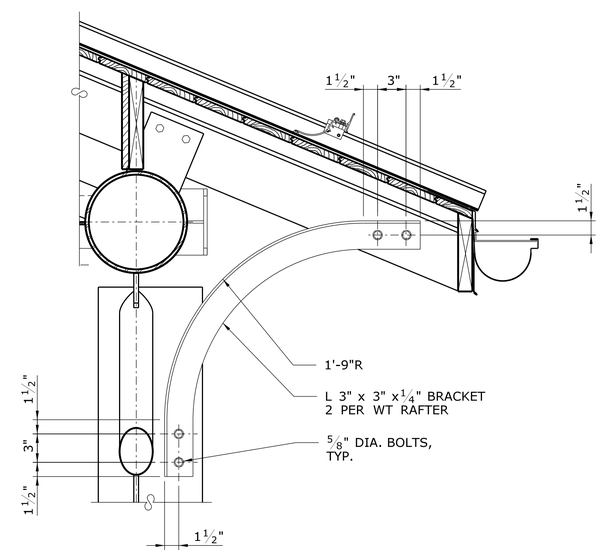

ROOF BRACKET DETAIL — E / A-304

SCALE: 1½"=1'-0"

REV.	DATE	REVISION DESCRIPTION	SHEET NO.

Filename: FD_MSH_ARC_0027_0059_A-513.dgn

THE INFORMATION, INCLUDING ESTIMATED QUANTITIES OF WORK, SHOWN ON THESE SHEETS IS BASED ON LIMITED INVESTIGATIONS BY THE STATE AND IS IN NO WAY WARRANTED TO INDICATE THE CONDITIONS OF ACTUAL QUANTITIES OF WORK WHICH WILL BE REQUIRED.

Date Plotted: October 01, 2014

DESIGNER/DRAFTER: D. TUDRYN / R. WRIGHT

CHECKED BY: D. TUDRYN

SCALE AS NOTED

STATE OF CONNECTICUT
DEPARTMENT OF TRANSPORTATION

ENGINEER: BAKER ENGINEERING

APPROVED BY: DATE:

PROJECT TITLE: **SHORE LINE EAST RAILROAD STATIONS**

TOWN: **CLINTON**

DRAWING TITLE: **PEDESTRIAN BRIDGE DETAILS - 2**

PROJECT NO. **310-0059**

DRAWING NO. **A-513**

SHEET NO. **04.44**

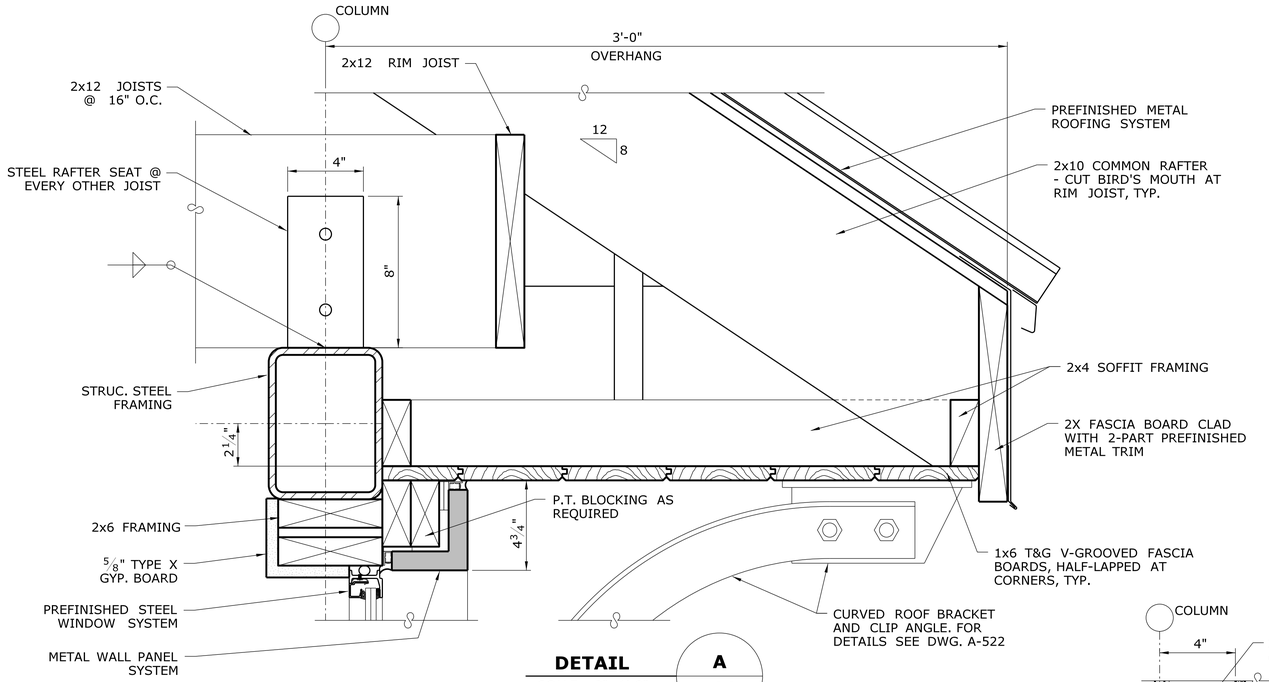

DETAIL A
SCALE: 3"=1'-0"
A-301

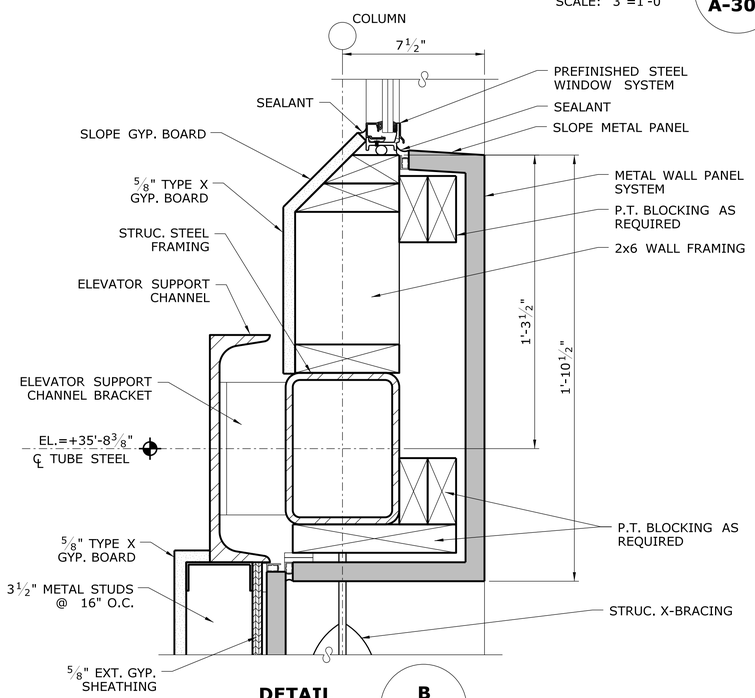

DETAIL B
SCALE: 3"=1'-0"
A-301

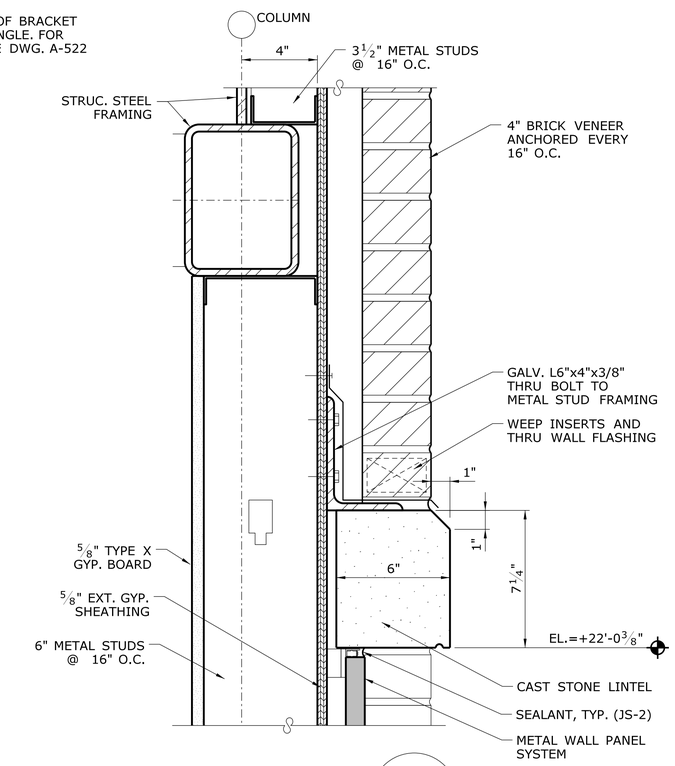

DETAIL D
SCALE: 3"=1'-0"
A-301

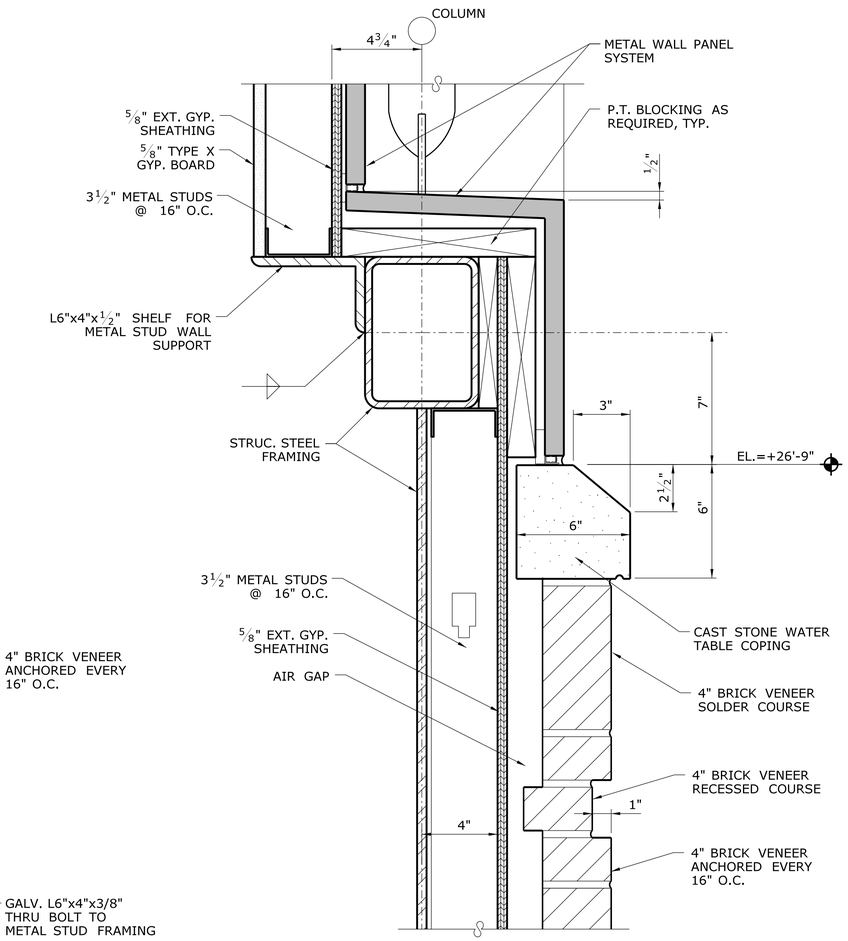

DETAIL C
SCALE: 3"=1'-0"
A-301

REV.	DATE	REVISION DESCRIPTION	SHEET NO.

Filename: FD..MSH..ARC..0027..0059..A-514.dgn

THE INFORMATION, INCLUDING ESTIMATED QUANTITIES OF WORK, SHOWN ON THESE SHEETS IS BASED ON LIMITED INVESTIGATIONS BY THE STATE AND IS IN NO WAY WARRANTED TO INDICATE THE CONDITIONS OF ACTUAL QUANTITIES OF WORK WHICH WILL BE REQUIRED.

Date Plotted: October 01, 2014

DESIGNER/DRAFTER: D. TUDRYN / R. WRIGHT
CHECKED BY: D. TUDRYN
SCALE AS NOTED

STATE OF CONNECTICUT
DEPARTMENT OF TRANSPORTATION

ENGINEER: BAKER ENGINEERING
APPROVED BY:
DATE:

PROJECT TITLE:
SHORE LINE EAST RAILROAD STATIONS

TOWN: **CLINTON**

DRAWING TITLE: **STAIR TOWER DETAILS - 1**

PROJECT NO. **310-0059**
DRAWING NO. **A-514**
SHEET NO. **04.45**

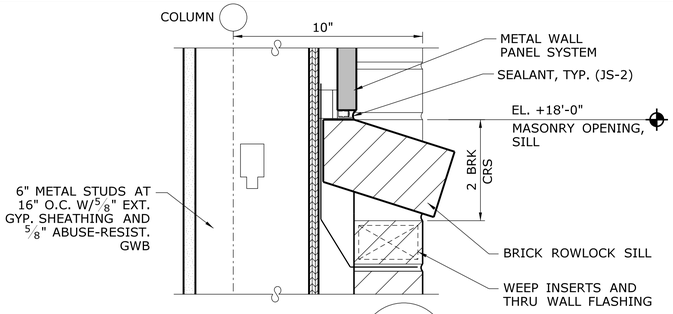

DETAIL A — SCALE: 3"=1'-0" — A-301

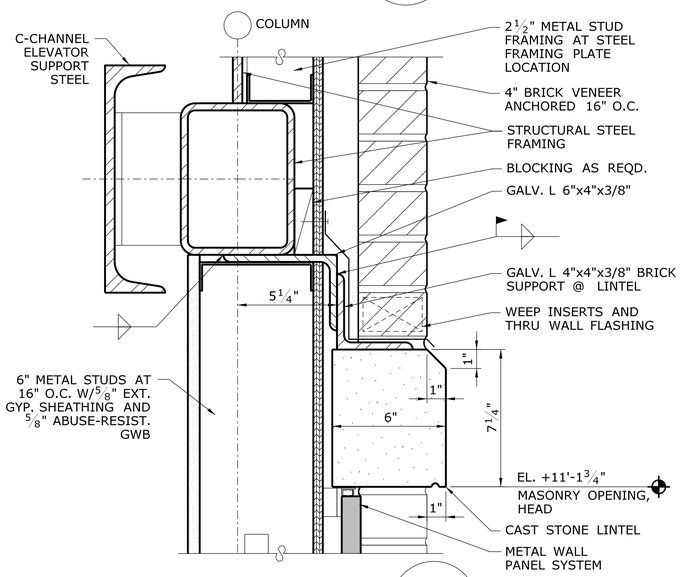

DETAIL B — SCALE: 3"=1'-0" — A-301

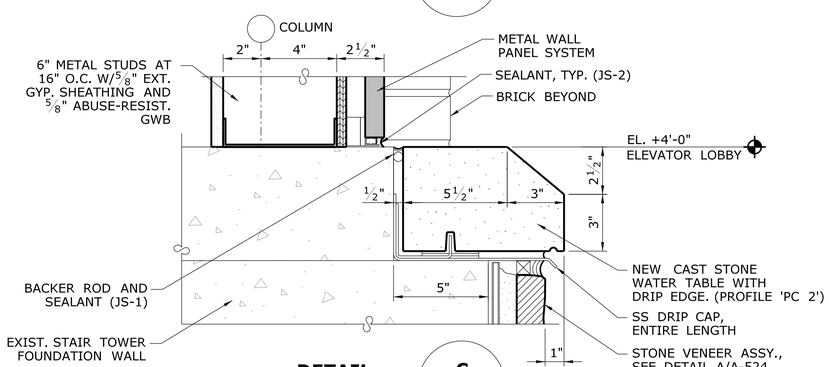

DETAIL C — SCALE: 3"=1'-0" — A-301

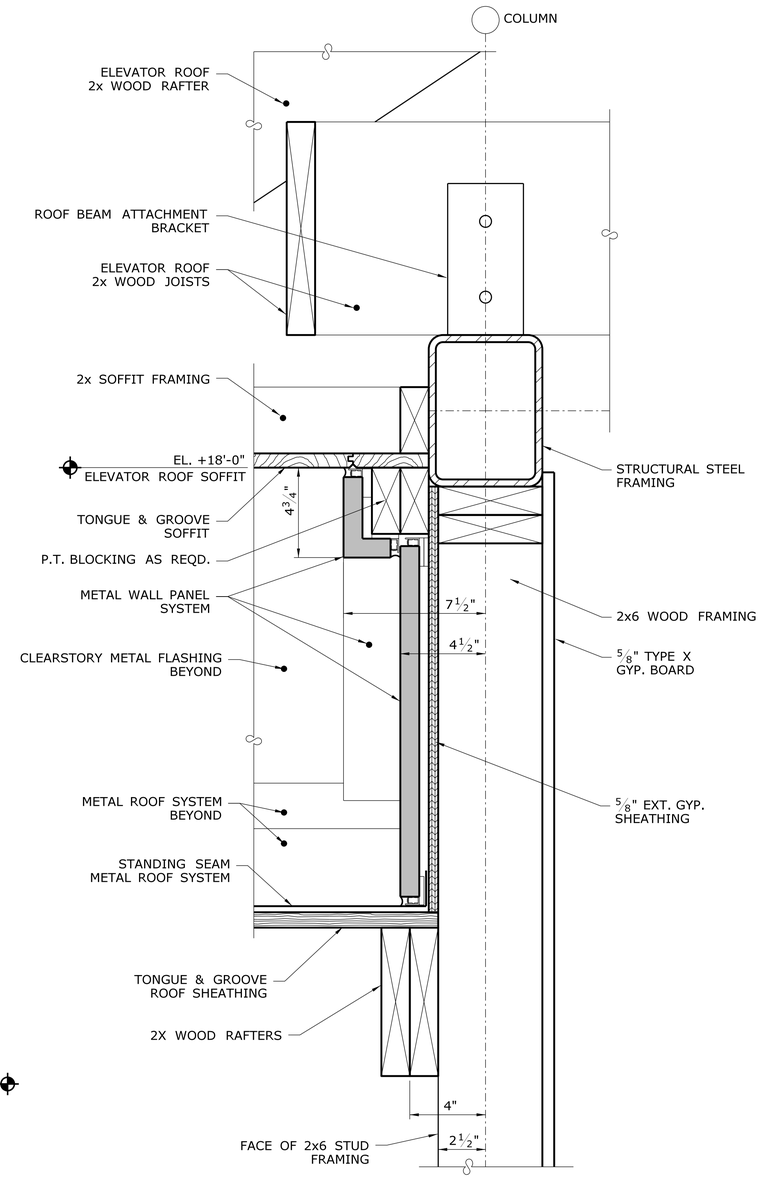

DETAIL D — SCALE: 3"=1'-0" — A-301

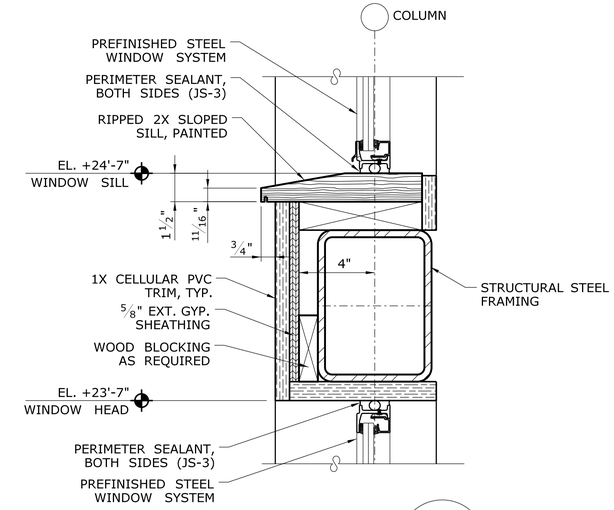

DETAIL E — SCALE: 3"=1'-0" — A-301

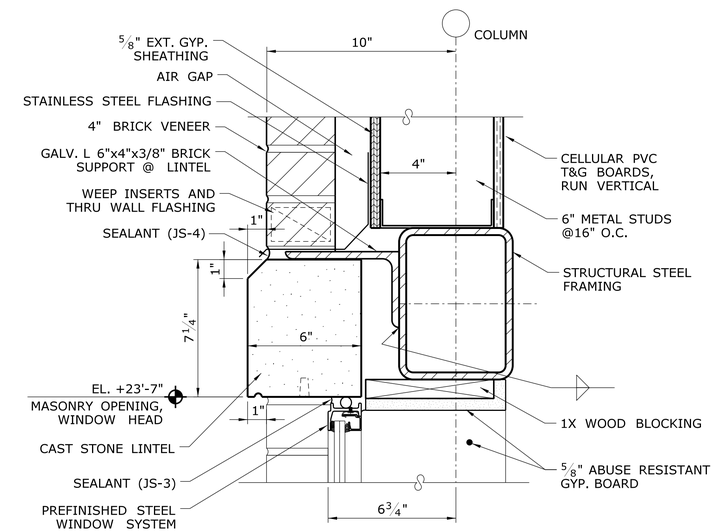

DETAIL F — SCALE: 3"=1'-0" — A-301

REV.	DATE	REVISION DESCRIPTION	SHEET NO.

Filename: FD_MSH_ARC_0027_0059_A-515.dgn

THE INFORMATION, INCLUDING ESTIMATED QUANTITIES OF WORK, SHOWN ON THESE SHEETS IS BASED ON LIMITED INVESTIGATIONS BY THE STATE AND IS IN NO WAY WARRANTED TO INDICATE THE CONDITIONS OF ACTUAL QUANTITIES OF WORK WHICH WILL BE REQUIRED.

Date Plotted: October 01, 2014

DESIGNER/DRAFTER: D. TUDRYN / R. WRIGHT
CHECKED BY: D. TUDRYN
SCALE AS NOTED

STATE OF CONNECTICUT
DEPARTMENT OF TRANSPORTATION

ENGINEER: BAKER ENGINEERING
APPROVED BY:
DATE:

PROJECT TITLE: **SHORE LINE EAST RAILROAD STATIONS**

TOWN: **CLINTON**

DRAWING TITLE: **STAIR TOWER DETAILS - 2**

PROJECT NO. **310-0059**
DRAWING NO. **A-515**
SHEET NO. **04.46**

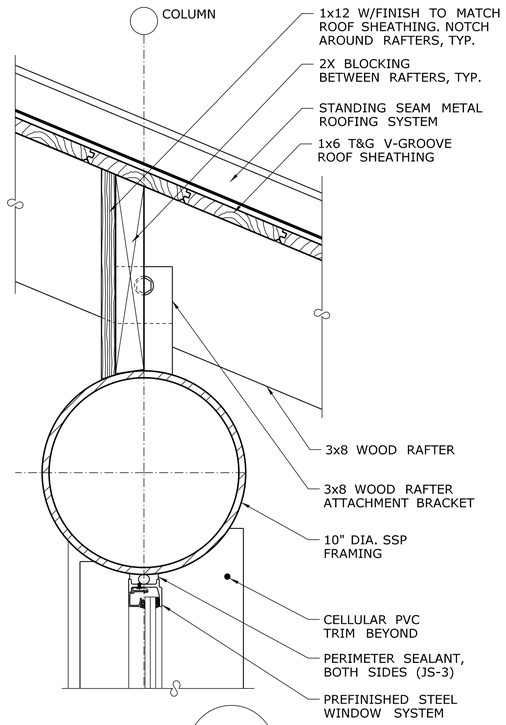

DETAIL A — A-302
SCALE: 3"=1'-0"

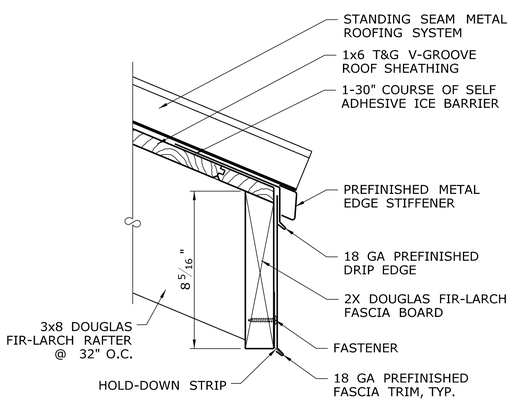

DETAIL B — A-302
SCALE: 3"=1'-0"

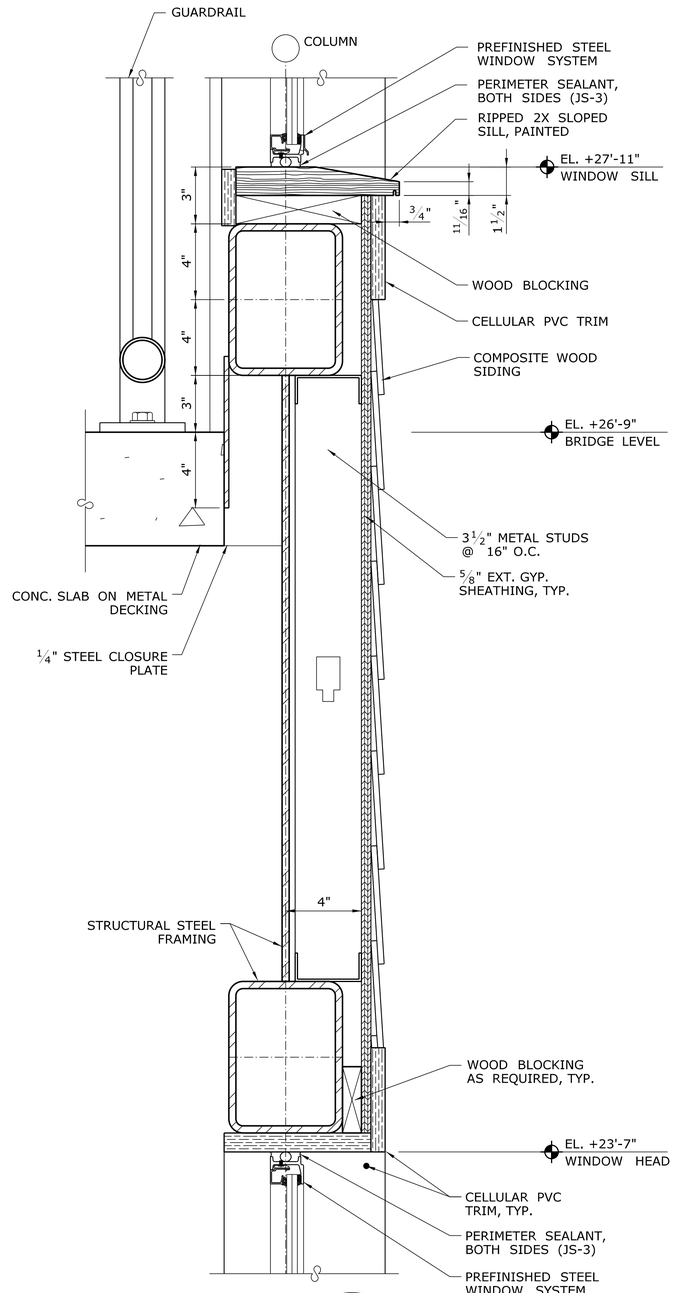

DETAIL C — A-302
SCALE: 3"=1'-0"

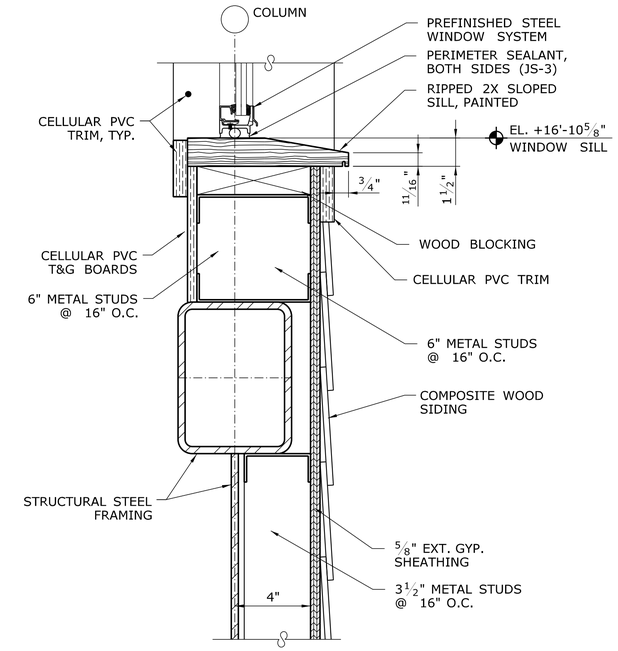

DETAIL D — A-302
SCALE: 3"=1'-0"

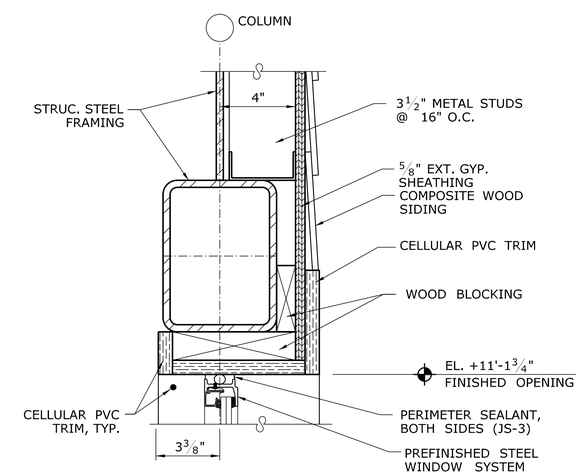

DETAIL E — A-302
SCALE: 3"=1'-0"

REV.	DATE	REVISION DESCRIPTION	SHEET NO.

Filename: FD_MSH_ARC_0027_0059_A-516.dgn

THE INFORMATION, INCLUDING ESTIMATED QUANTITIES OF WORK, SHOWN ON THESE SHEETS IS BASED ON LIMITED INVESTIGATIONS BY THE STATE AND IS IN NO WAY WARRANTED TO INDICATE THE CONDITIONS OF ACTUAL QUANTITIES OF WORK WHICH WILL BE REQUIRED.

Date Plotted: October 01, 2014

DESIGNER/DRAFTER: D. TUDRYN / R. WRIGHT
CHECKED BY: D. TUDRYN
SCALE AS NOTED

STATE OF CONNECTICUT
DEPARTMENT OF TRANSPORTATION

ENGINEER: BAKER ENGINEERING
APPROVED BY:
DATE:

PROJECT TITLE: SHORE LINE EAST RAILROAD STATIONS

TOWN: CLINTON

DRAWING TITLE: STAIR TOWER DETAILS - 3

PROJECT NO. 310-0059
DRAWING NO. A-516
SHEET NO. 04.47

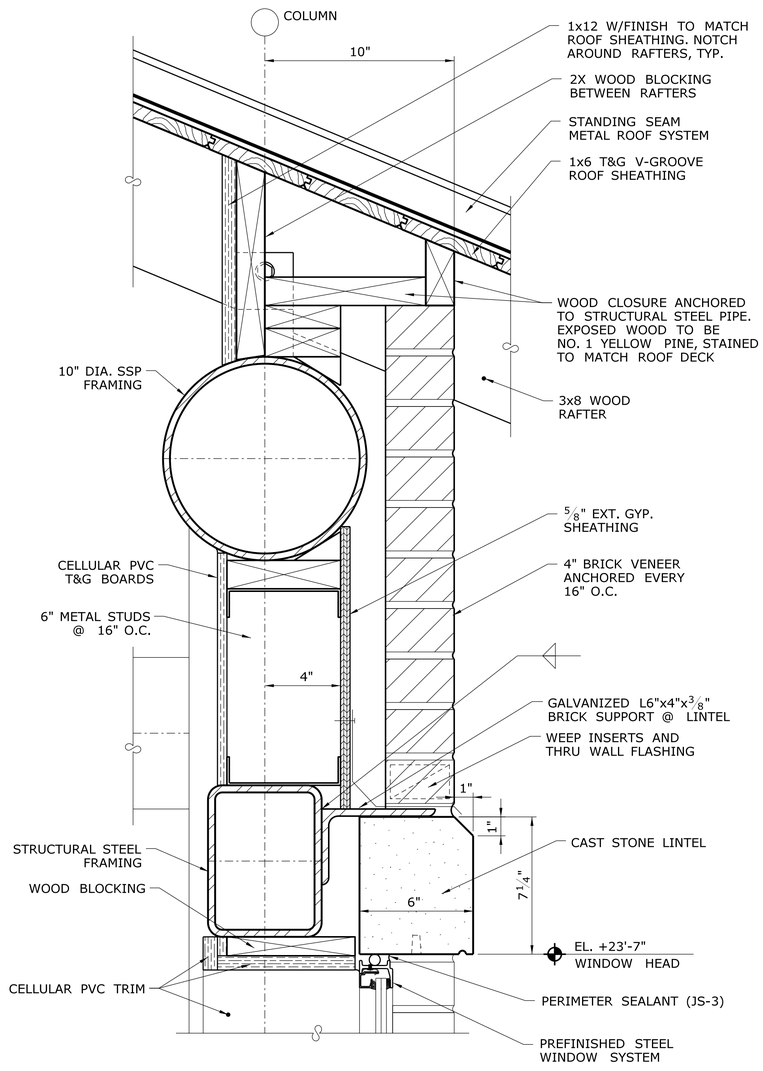

DETAIL A
SCALE: 3"=1'-0"
A-302

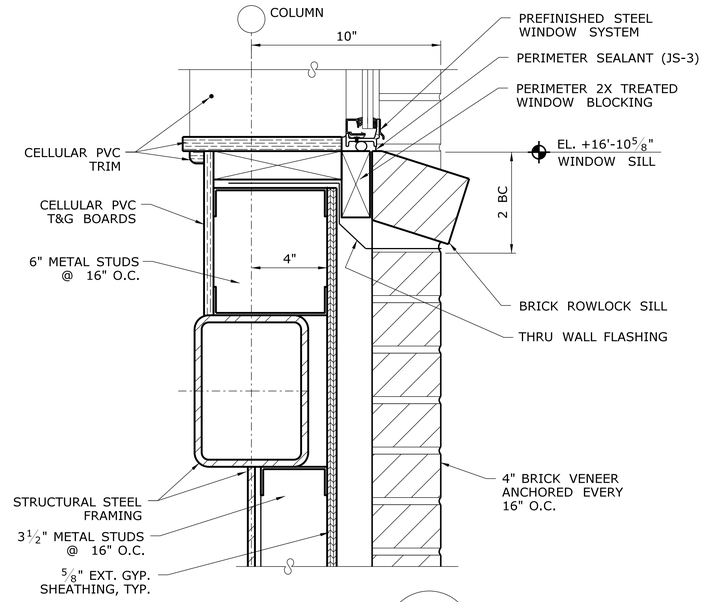

DETAIL B
SCALE: 3"=1'-0"
A-302

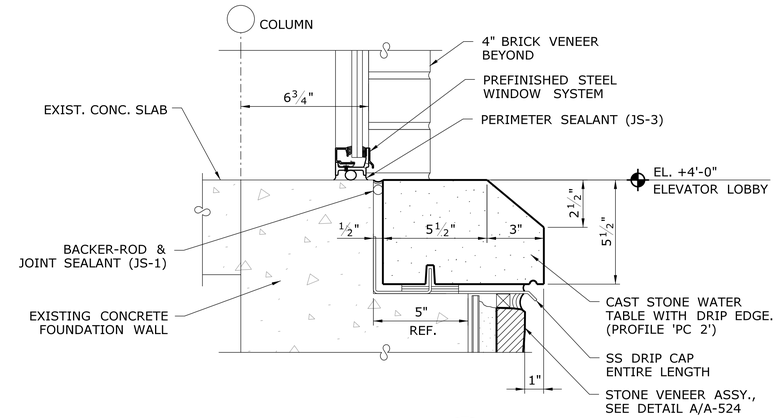

DETAIL D
SCALE: 3"=1'-0"
A-302

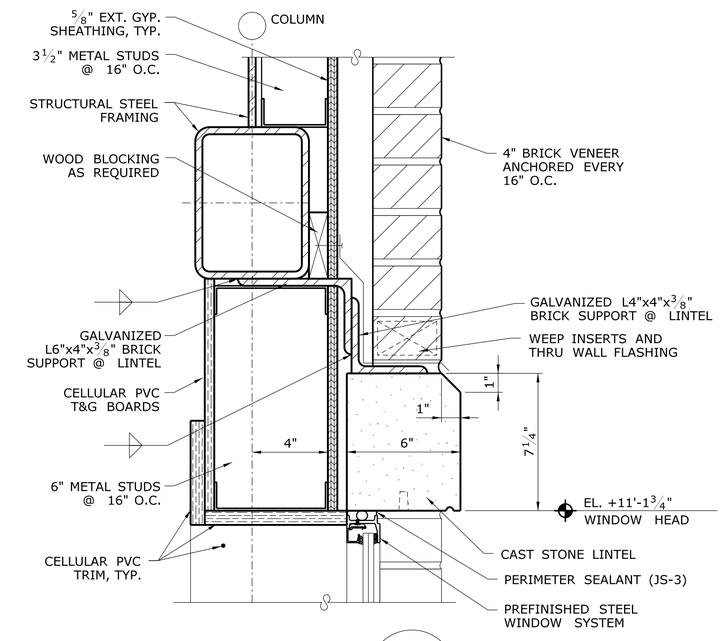

DETAIL C
SCALE: 3"=1'-0"
A-302

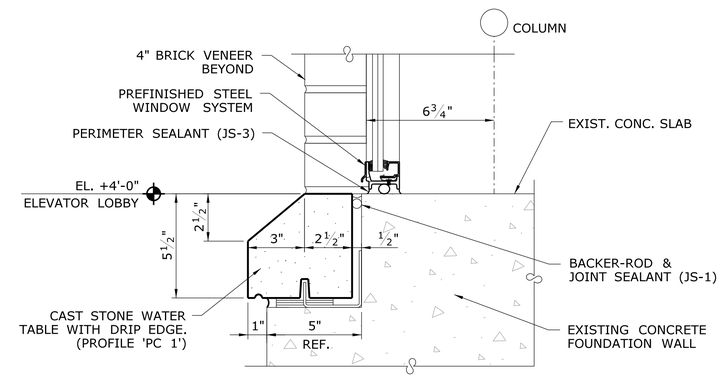

DETAIL E
SCALE: 3"=1'-0"
A-302

REV.	DATE	REVISION DESCRIPTION	SHEET NO.

Filename: FD_MSH_ARC_0027_0059_A-517.dgn

THE INFORMATION, INCLUDING ESTIMATED QUANTITIES OF WORK, SHOWN ON THESE SHEETS IS BASED ON LIMITED INVESTIGATIONS BY THE STATE AND IS IN NO WAY WARRANTED TO INDICATE THE CONDITIONS OF ACTUAL QUANTITIES OF WORK WHICH WILL BE REQUIRED.

Date Plotted: October 01, 2014

DESIGNER/DRAFTER: D. TUDRYN / R. WRIGHT
CHECKED BY: D. TUDRYN
SCALE AS NOTED

STATE OF CONNECTICUT
DEPARTMENT OF TRANSPORTATION

ENGINEER: BAKER ENGINEERING
APPROVED BY:
DATE:

PROJECT TITLE:
SHORE LINE EAST RAILROAD STATIONS

TOWN: CLINTON

DRAWING TITLE: STAIR TOWER DETAILS - 4

PROJECT NO. 310-0059
DRAWING NO. A-517
SHEET NO. 04.48

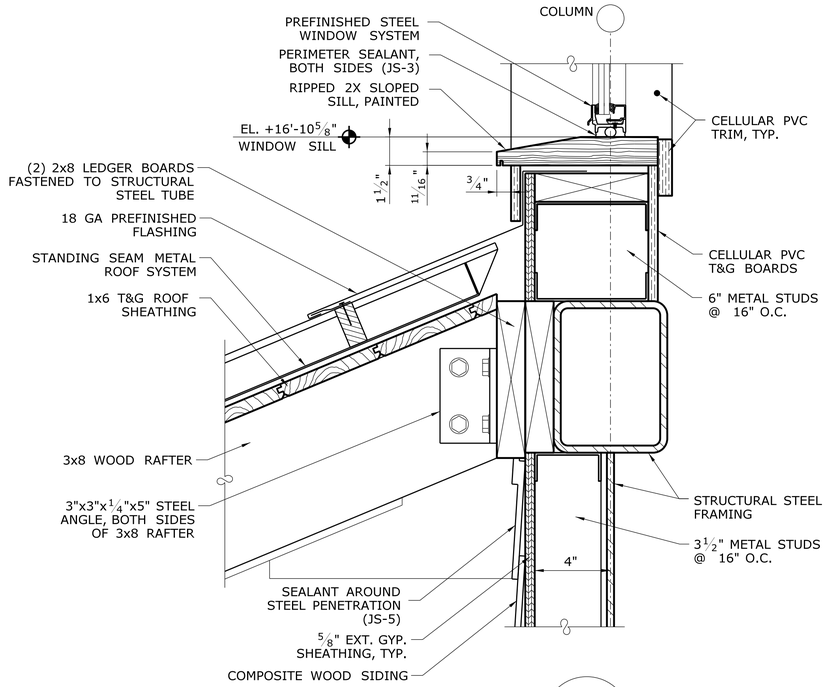

DETAIL A — SCALE: 3"=1'-0" — A-302

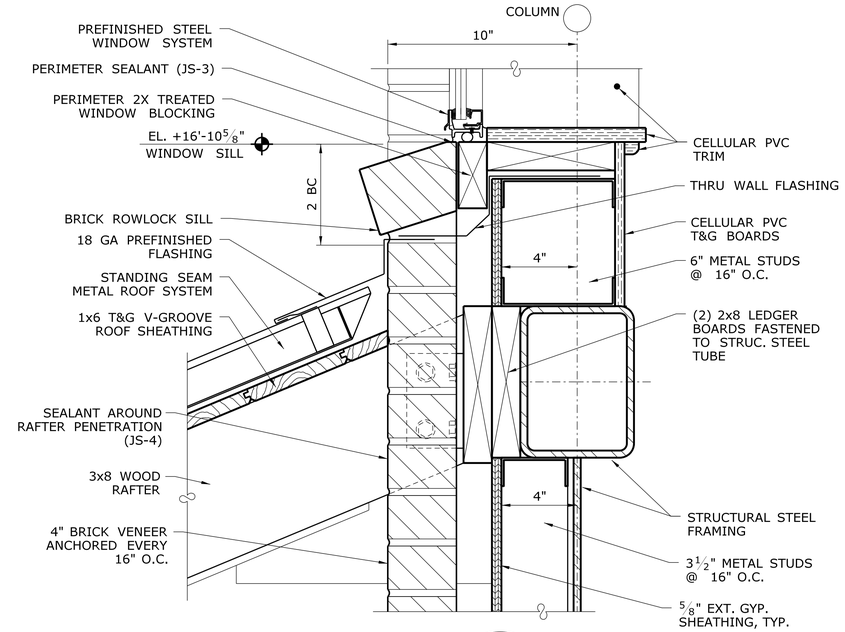

DETAIL C — SCALE: 3"=1'-0" — A-303

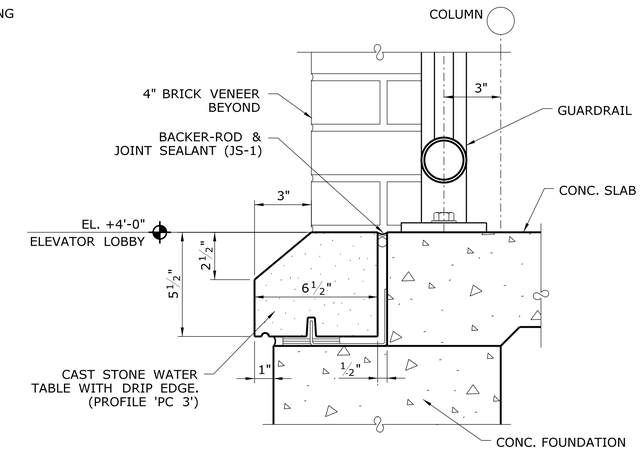

DETAIL E — SCALE: 3"=1'-0" — A-303

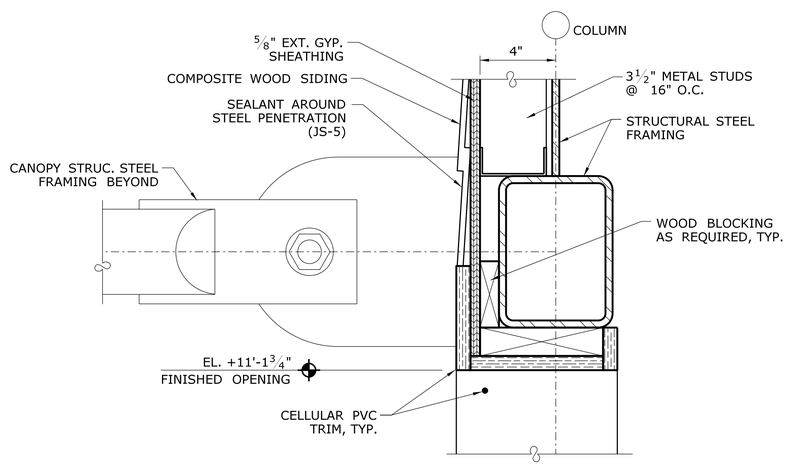

DETAIL B — SCALE: 3"=1'-0" — A-302

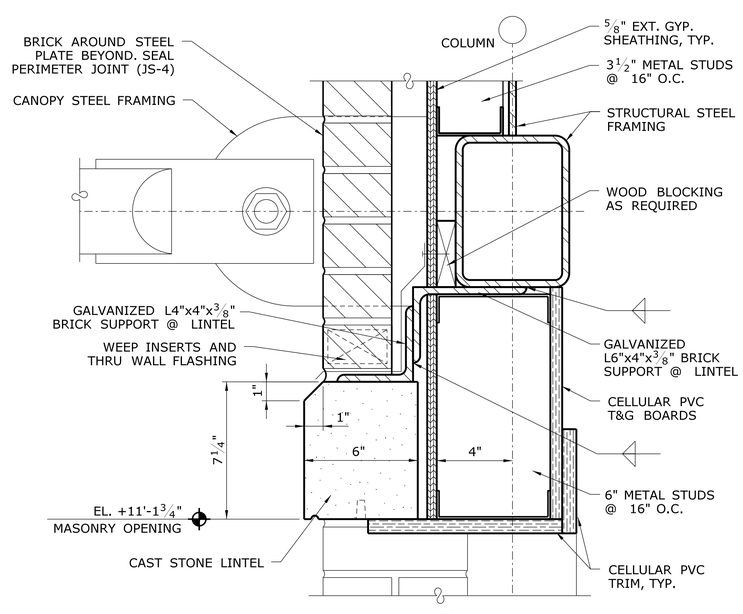

DETAIL D — SCALE: 3"=1'-0" — A-303

REV.	DATE	REVISION DESCRIPTION	SHEET NO.

Filename: FD_MSH_ARC_0027_0059_A-518.dgn

THE INFORMATION, INCLUDING ESTIMATED QUANTITIES OF WORK, SHOWN ON THESE SHEETS IS BASED ON LIMITED INVESTIGATIONS BY THE STATE AND IS IN NO WAY WARRANTED TO INDICATE THE CONDITIONS OF ACTUAL QUANTITIES OF WORK WHICH WILL BE REQUIRED.

Date Plotted: October 01, 2014

DESIGNER/DRAFTER: D. TUDRYN / R. WRIGHT
CHECKED BY: D. TUDRYN
SCALE AS NOTED

STATE OF CONNECTICUT
DEPARTMENT OF TRANSPORTATION

ENGINEER: BAKER ENGINEERING
APPROVED BY:
DATE:

PROJECT TITLE: SHORE LINE EAST RAILROAD STATIONS

TOWN: CLINTON

DRAWING TITLE: STAIR TOWER DETAILS - 5

PROJECT NO. 310-0059
DRAWING NO. A-518
SHEET NO. 04.49

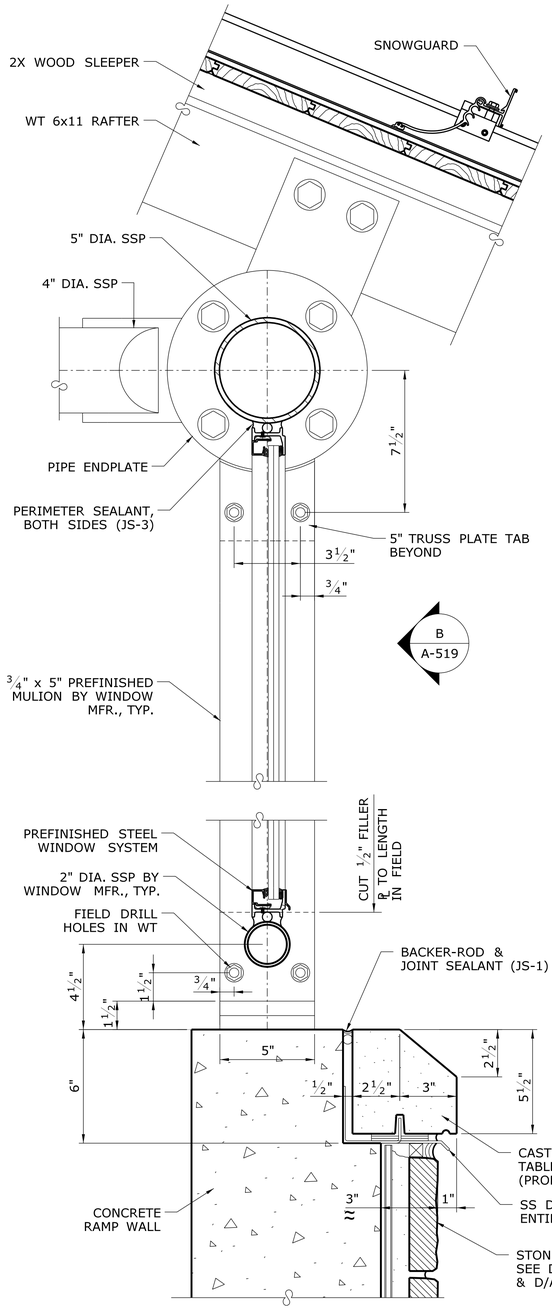

DETAIL A / A-303
SCALE: 3"=1'-0"

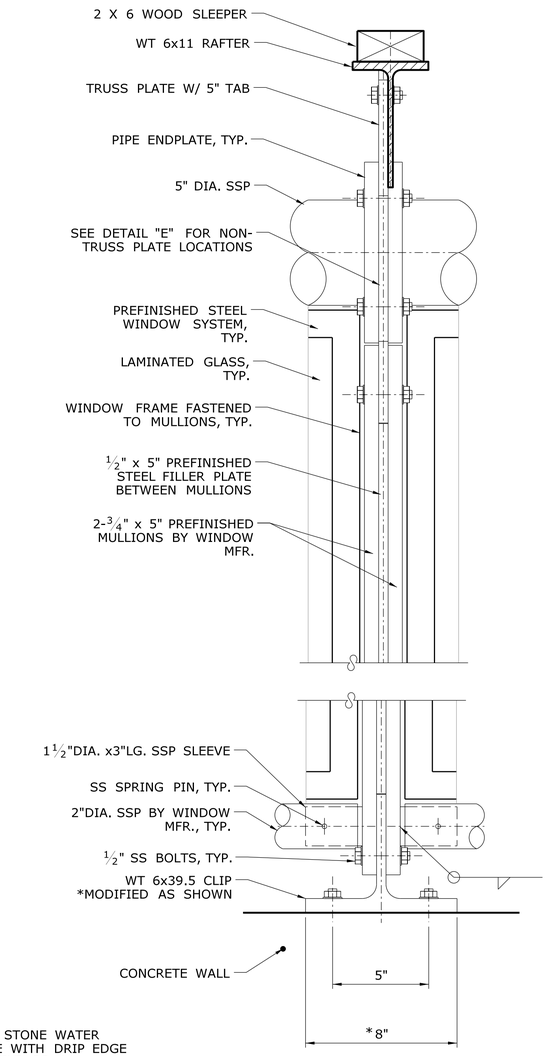

DETAIL B / A-519
SCALE: 3"=1'-0"

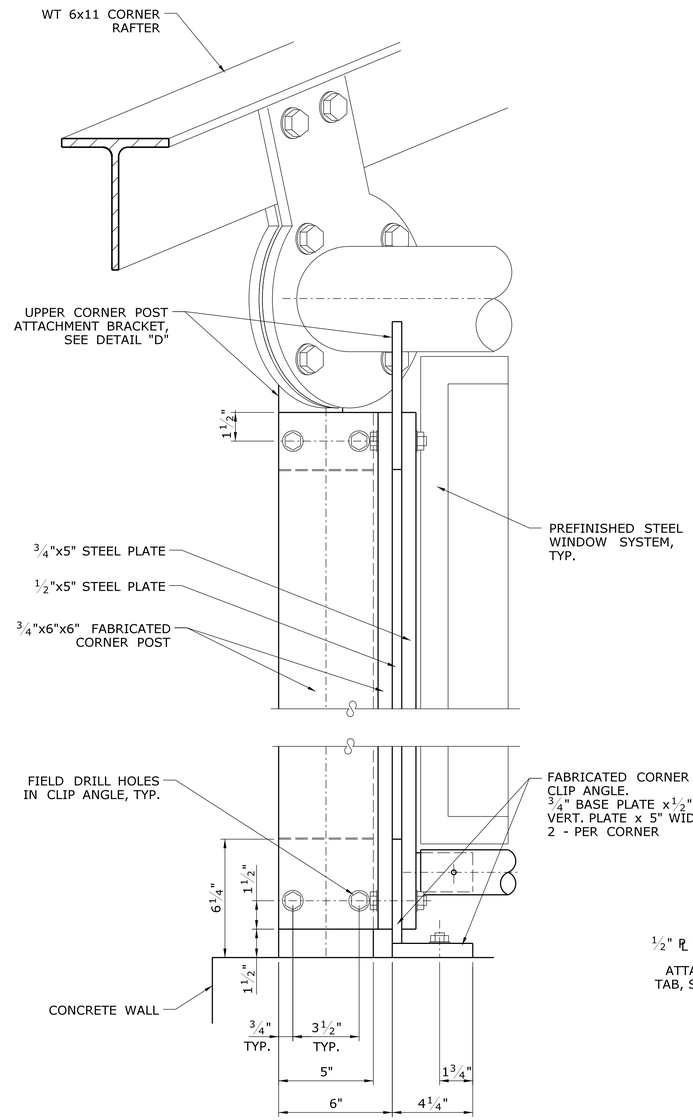

RAMP WINDOW CORNER DETAIL C / A-519
SCALE: 3"=1'-0"

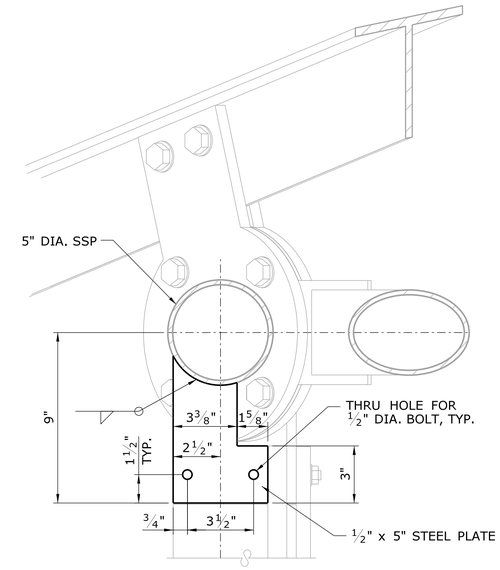

DETAIL D / A-519
SCALE: 3"=1'-0"

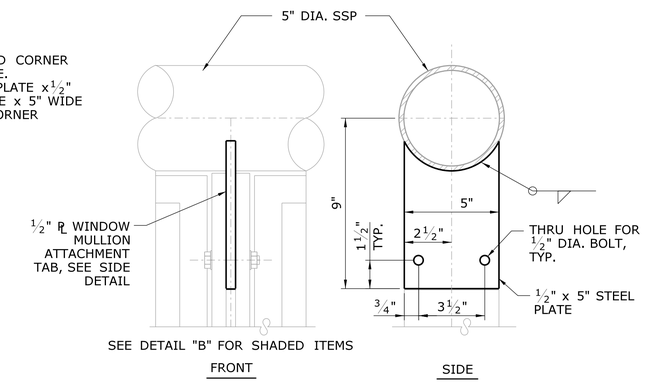

NOTE: TO BE UTILIZED IN LOCATIONS WHERE NO CANOPY TRUSS PLATES ARE USED.

DETAIL E / A-519
SCALE: 3"=1'-0"

REV.	DATE	REVISION DESCRIPTION	SHEET NO.

Filename: FD_MSH_ARC_0027_0059_A-519.dgn

THE INFORMATION, INCLUDING ESTIMATED QUANTITIES OF WORK, SHOWN ON THESE SHEETS IS BASED ON LIMITED INVESTIGATIONS BY THE STATE AND IS IN NO WAY WARRANTED TO INDICATE THE CONDITIONS OF ACTUAL QUANTITIES OF WORK WHICH WILL BE REQUIRED.

Date Plotted: October 01, 2014

DESIGNER/DRAFTER: D. TUDRYN / R. WRIGHT
CHECKED BY: D. TUDRYN
SCALE AS NOTED

STATE OF CONNECTICUT
DEPARTMENT OF TRANSPORTATION

ENGINEER: BAKER ENGINEERING
APPROVED BY:
DATE:

STATE OF CONNECTICUT — COLLIN A. BAKER — No. 19079 — LICENSED PROFESSIONAL ENGINEER

PROJECT TITLE:
SHORE LINE EAST RAILROAD STATIONS

TOWN: **CLINTON**

DRAWING TITLE: **STAIR TOWER DETAILS - 6**

PROJECT NO. **310-0059**
DRAWING NO. **A-519**
SHEET NO. **04.50**

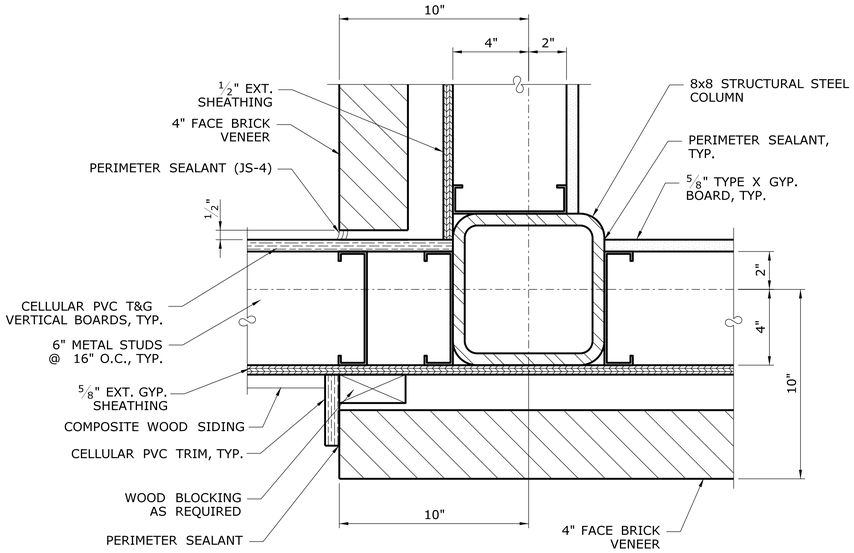

DETAIL A — A-400
SCALE: 3"=1'-0"

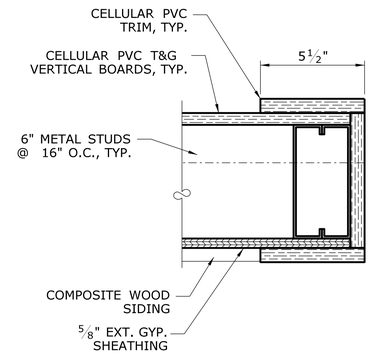

DETAIL B — A-400
SCALE: 3"=1'-0"

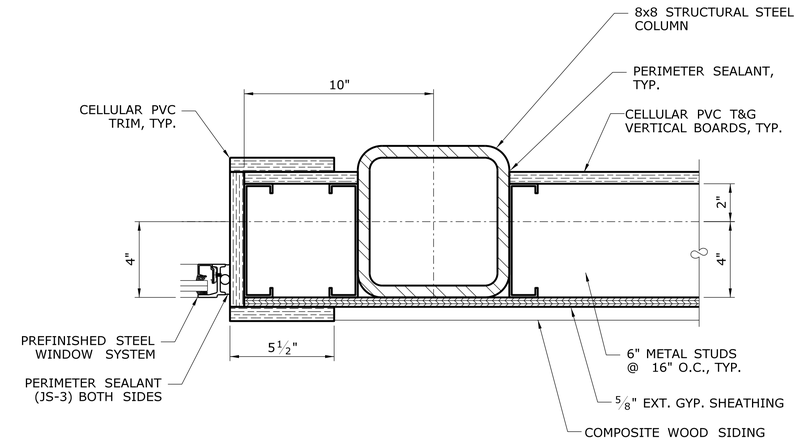

DETAIL C — A-400
SCALE: 3"=1'-0"

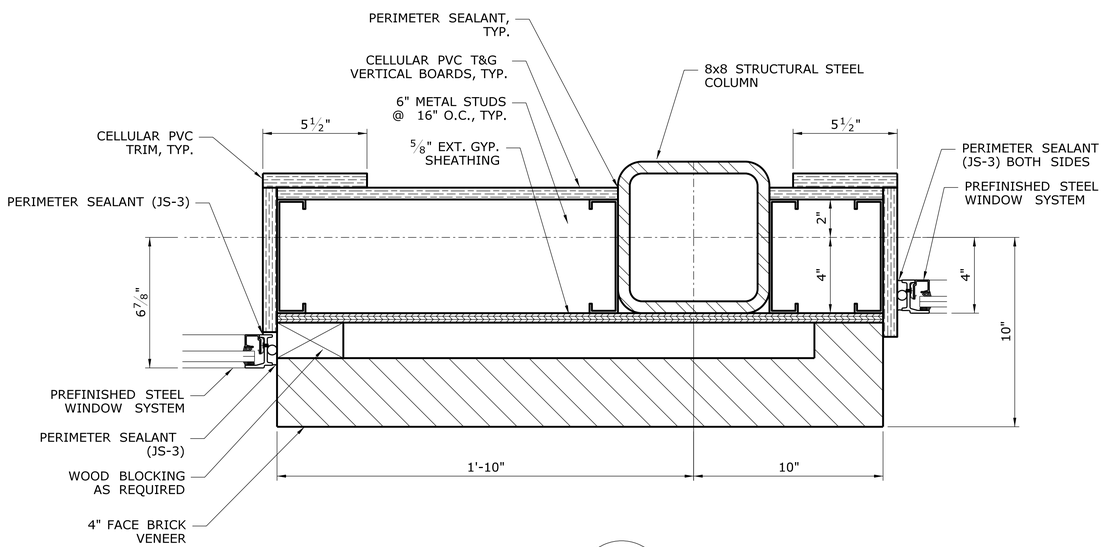

DETAIL D — A-400
SCALE: 3"=1'-0"

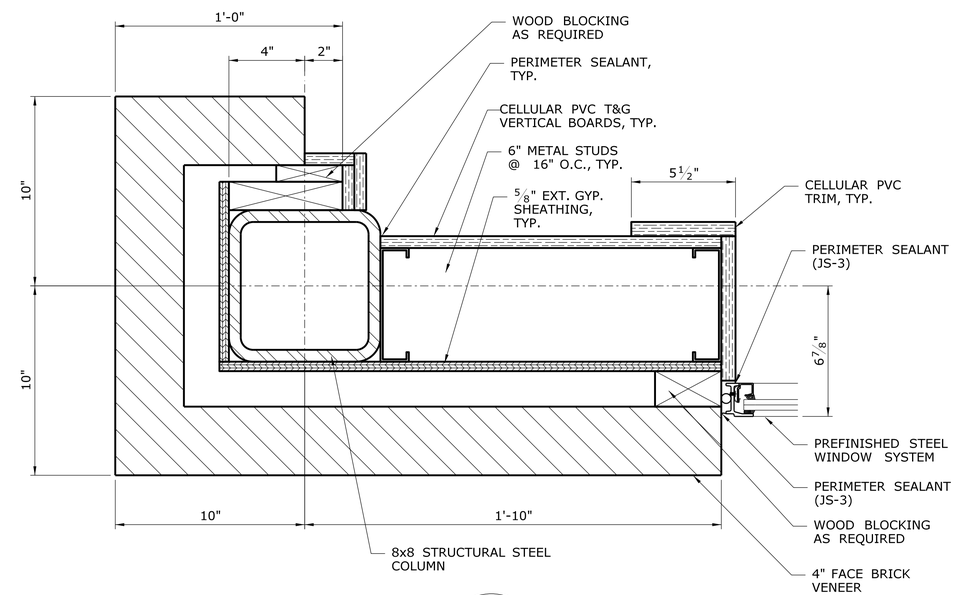

DETAIL E — A-400
SCALE: 3"=1'-0"

REV.	DATE	REVISION DESCRIPTION	SHEET NO.

Filename: FD_MSH_ARC_0027_0059_A-520.dgn

THE INFORMATION, INCLUDING ESTIMATED QUANTITIES OF WORK, SHOWN ON THESE SHEETS IS BASED ON LIMITED INVESTIGATIONS BY THE STATE AND IS IN NO WAY WARRANTED TO INDICATE THE CONDITIONS OF ACTUAL QUANTITIES OF WORK WHICH WILL BE REQUIRED.

Date Plotted: October 01, 2014

DESIGNER/DRAFTER: D. TUDRYN / R. WRIGHT
CHECKED BY: D. TUDRYN
SCALE AS NOTED

STATE OF CONNECTICUT
DEPARTMENT OF TRANSPORTATION

ENGINEER: BAKER ENGINEERING
APPROVED BY:
DATE:

PROJECT TITLE:
SHORE LINE EAST RAILROAD STATIONS

TOWN: **CLINTON**

DRAWING TITLE: **STAIR TOWER DETAILS - 7**

PROJECT NO. **310-0059**
DRAWING NO. **A-520**
SHEET NO. **04.51**

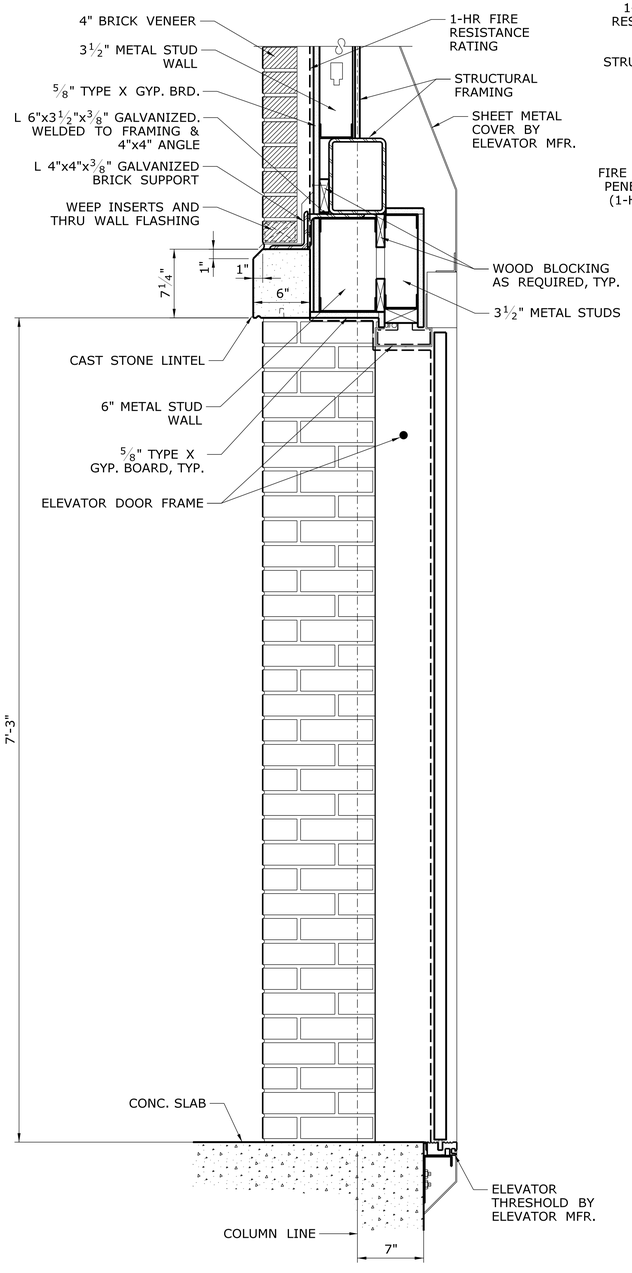

SECTION A
SCALE: 1½"=1'-0"
A-402

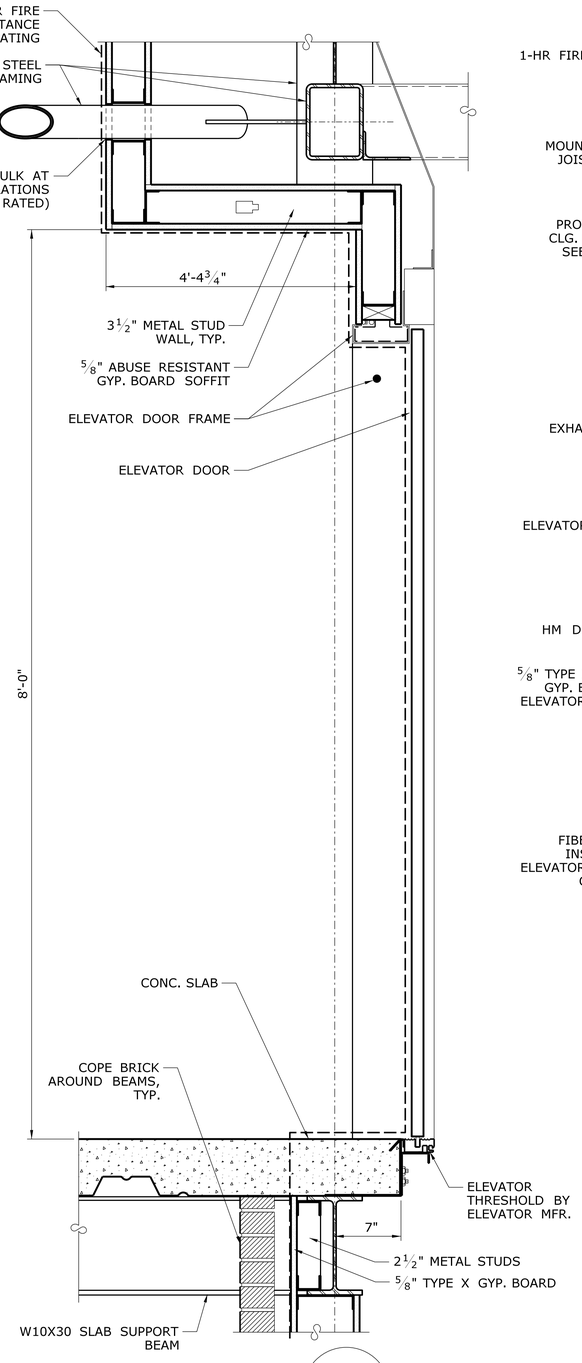

SECTION B
SCALE: 1½"=1'-0"
A-403

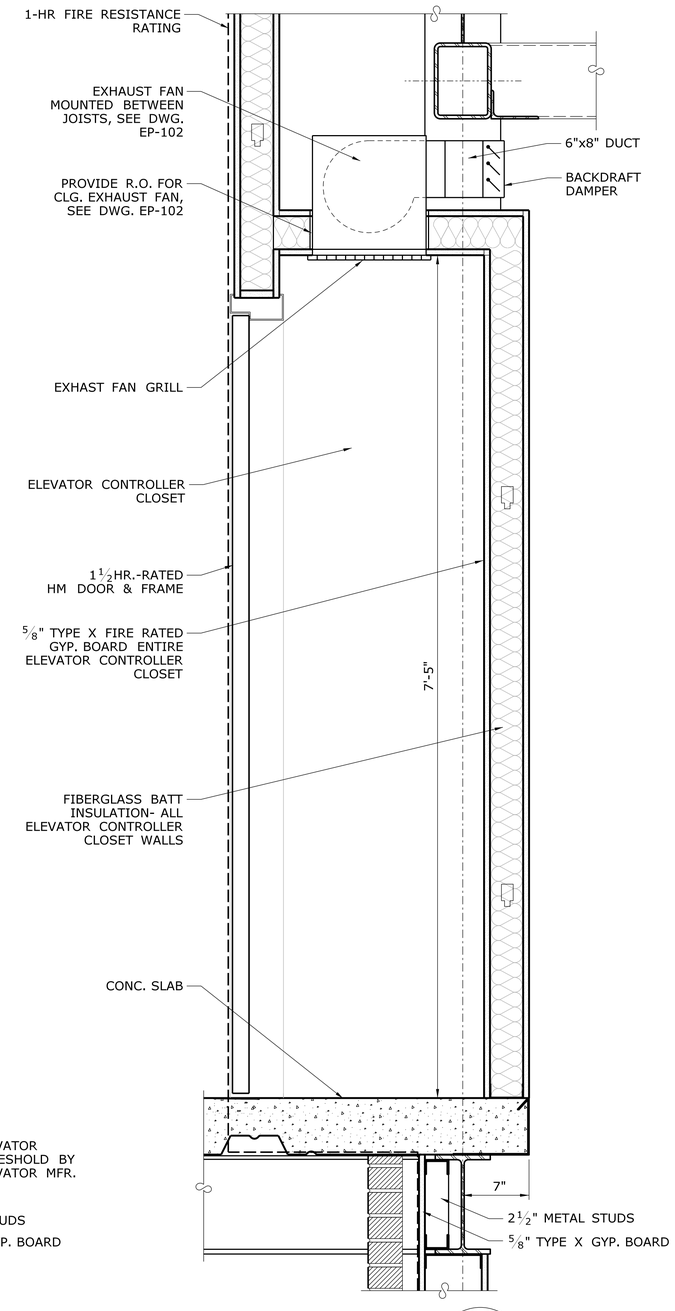

SECTION C
SCALE: 1½"=1'-0"
A-403

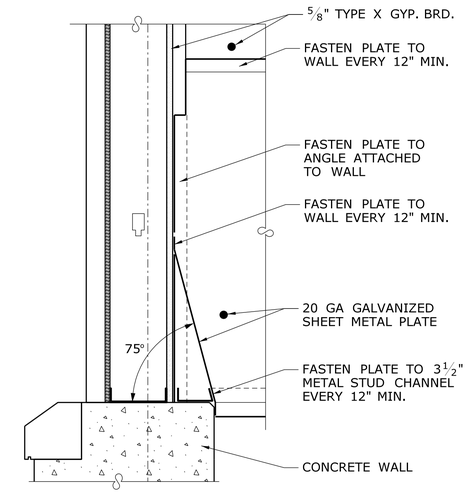

SECTION D
SCALE: 1½"=1'-0"
A-402

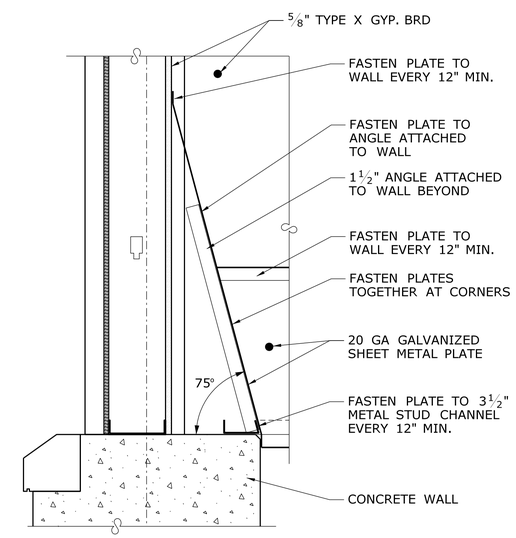

SECTION E
SCALE: 1½"=1'-0"
A-402

REV.	DATE	REVISION DESCRIPTION	SHEET NO.

Filename: FD_MSH_ARC_0027_0059_A-521.dgn

THE INFORMATION, INCLUDING ESTIMATED QUANTITIES OF WORK, SHOWN ON THESE SHEETS IS BASED ON LIMITED INVESTIGATIONS BY THE STATE AND IS IN NO WAY WARRANTED TO INDICATE THE CONDITIONS OF ACTUAL QUANTITIES OF WORK WHICH WILL BE REQUIRED.

Date Plotted: October 01, 2014

DESIGNER/DRAFTER: D. TUDRYN / R. WRIGHT
CHECKED BY: D. TUDRYN
SCALE AS NOTED

STATE OF CONNECTICUT
DEPARTMENT OF TRANSPORTATION

ENGINEER: BAKER ENGINEERING
APPROVED BY:
DATE:

PROJECT TITLE:
SHORE LINE EAST RAILROAD STATIONS

TOWN: **CLINTON**

DRAWING TITLE: **STAIR TOWER DETAILS - 8**

PROJECT NO. **310-0059**
DRAWING NO. **A-521**
SHEET NO. **04.52**

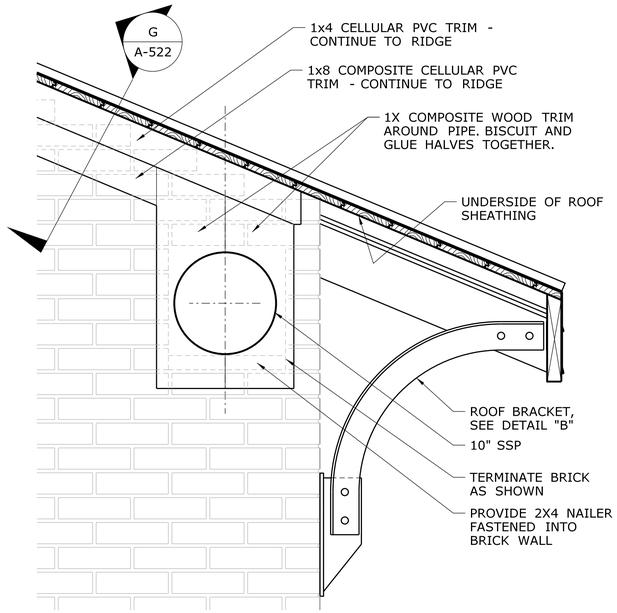

EXTERIOR TRIM DETAIL — A / A-203
SCALE: 1½"=1'-0"

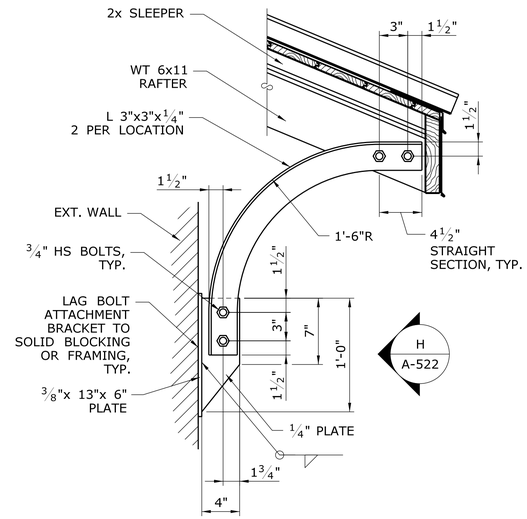

ROOF BRACKET DETAIL @ WT RAFTERS — B / A-522
SCALE: 1½"=1'-0"

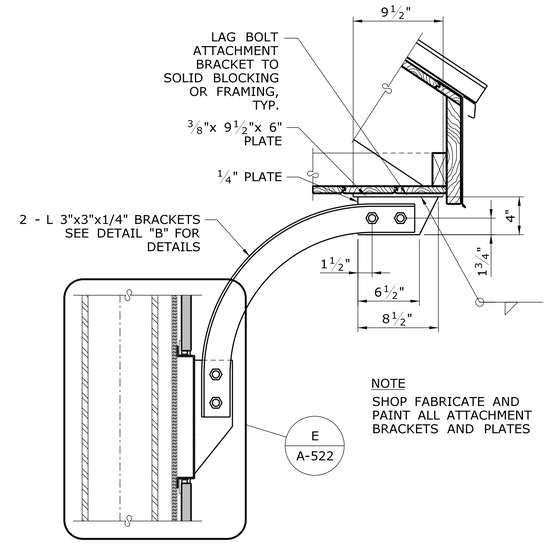

NOTE
SHOP FABRICATE AND PAINT ALL ATTACHMENT BRACKETS AND PLATES

ROOF BRACKET DETAIL @ ELEVATOR TOWER — C / A-522
SCALE: 1½"=1'-0"

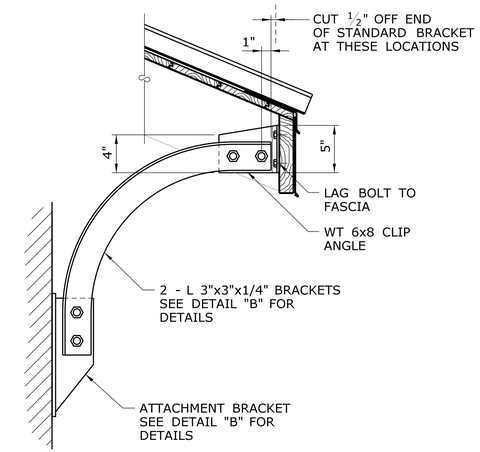

ROOF BRACKET DETAIL @ BETWEEN RAFTER LOCATION — D / A-522
SCALE: 1½"=1'-0"

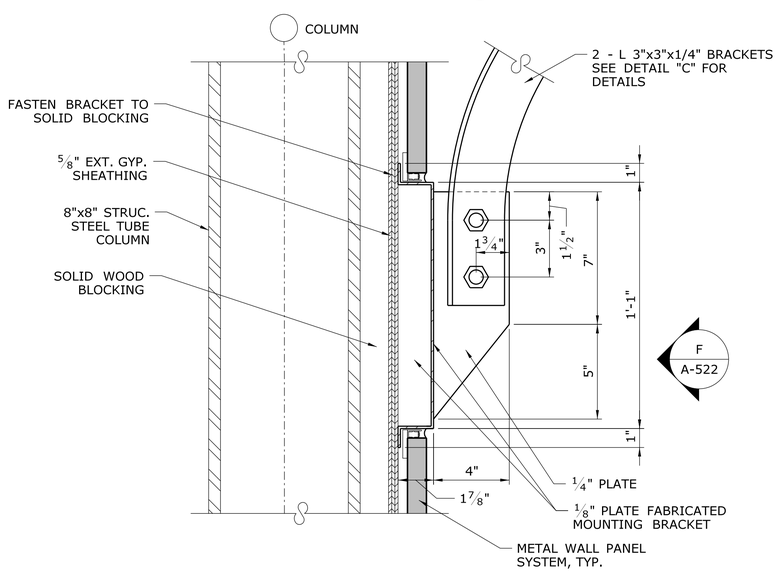

ROOF BRACKET ATTACHMENT DETAIL @ ELEVATOR TOWER — E / A-522
SCALE: 3"=1'-0"

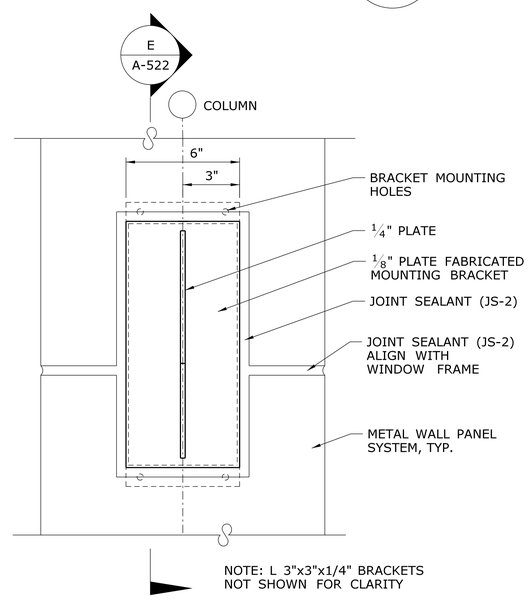

NOTE: L 3"x3"x1/4" BRACKETS NOT SHOWN FOR CLARITY

DETAIL — F / A-522
SCALE: 3"=1'-0"

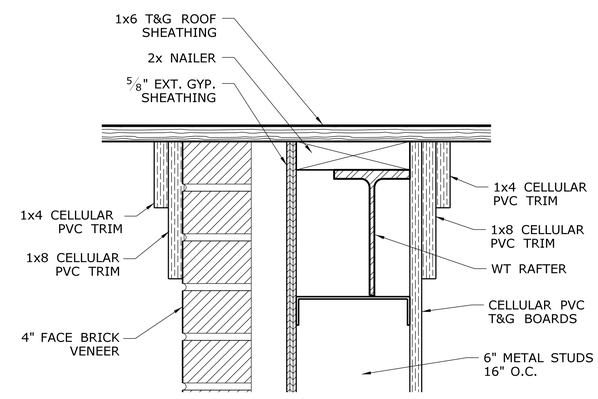

WALL DETAIL — G / A-522 — G / A-301
SCALE: 3"=1'-0"

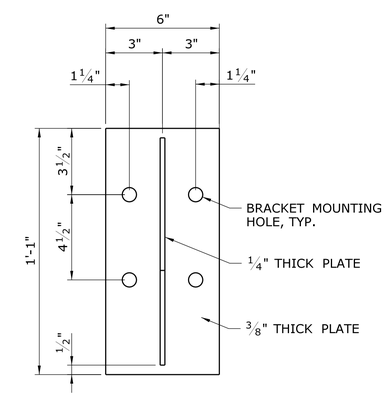

NOTE: BENT ANGLES NOT SHOWN FOR CLARITY.

ATTACHMENT BRACKET DETAIL — H / A-522
SCALE: 3"=1'-0"

REV.	DATE	REVISION DESCRIPTION	SHEET NO.

Filename: FD_MSH_ARC_0027_0059_A-522.dgn

THE INFORMATION, INCLUDING ESTIMATED QUANTITIES OF WORK, SHOWN ON THESE SHEETS IS BASED ON LIMITED INVESTIGATIONS BY THE STATE AND IS IN NO WAY WARRANTED TO INDICATE THE CONDITIONS OF ACTUAL QUANTITIES OF WORK WHICH WILL BE REQUIRED.

Date Plotted: October 01, 2014

DESIGNER/DRAFTER: D. TUDRYN / R. WRIGHT
CHECKED BY: D. TUDRYN
SCALE AS NOTED

STATE OF CONNECTICUT
DEPARTMENT OF TRANSPORTATION

ENGINEER: BAKER ENGINEERING
APPROVED BY:
DATE:

PROJECT TITLE:
SHORE LINE EAST RAILROAD STATIONS

TOWN: CLINTON

DRAWING TITLE: STAIR TOWER DETAILS - 9

PROJECT NO. 310-0059
DRAWING NO. A-522
SHEET NO. 04.53

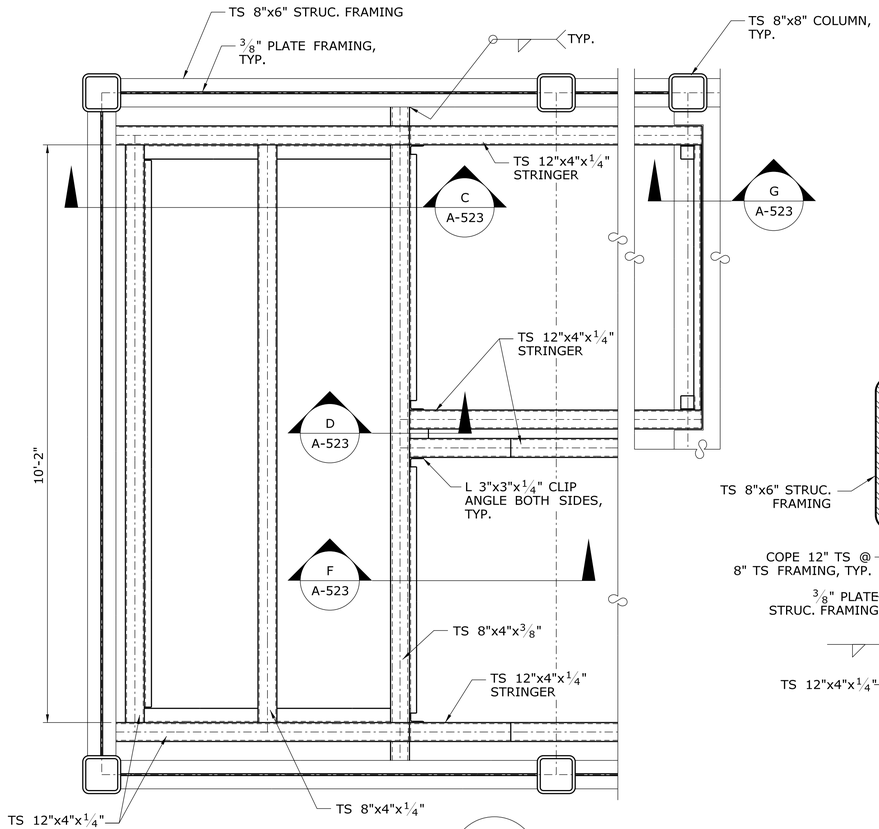

STAIR LANDING PLAN — A / A-523

SCALE: 3/4"=1'-0"

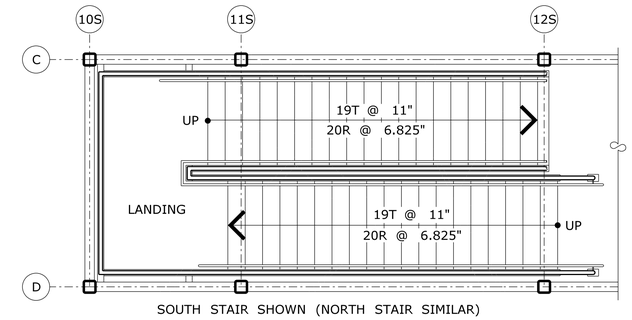

SOUTH STAIR SHOWN (NORTH STAIR SIMILAR)

STAIR PLAN — B / A-523

SCALE: 1/4"=1'-0"

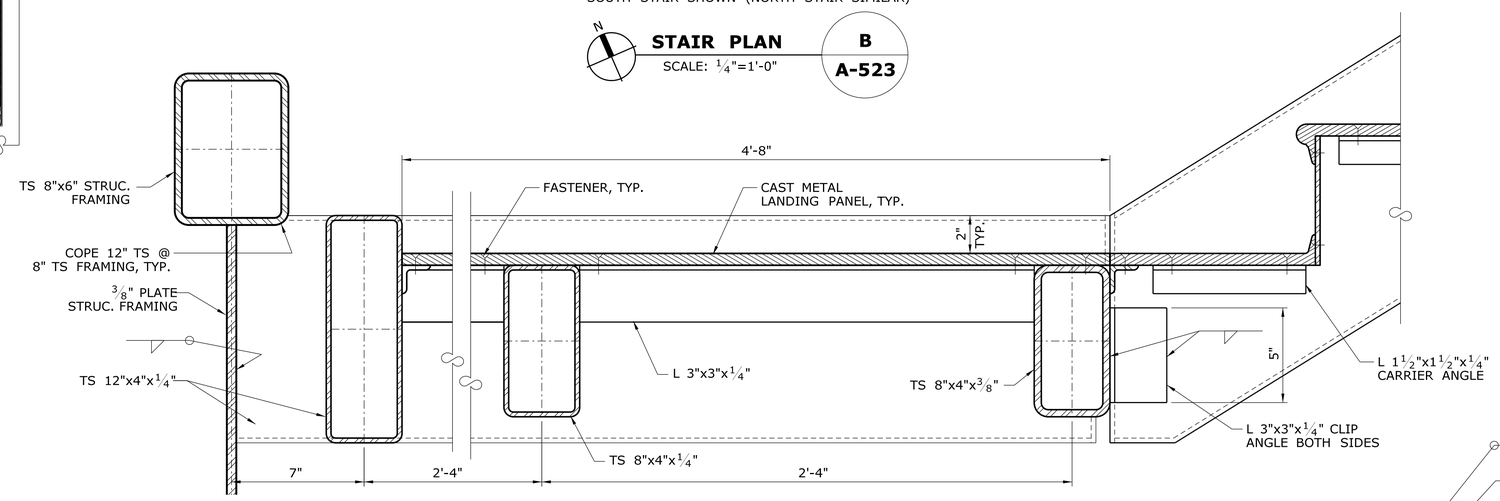

SECTION — C / A-523

SCALE: 3"=1'-0"

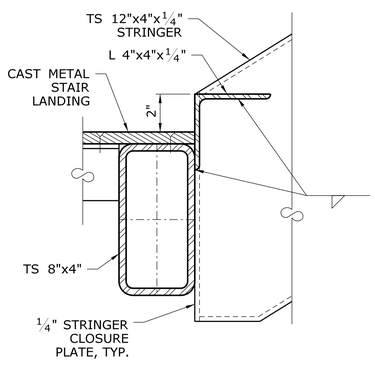

SECTION — D / A-523

SCALE: 3"=1'-0"

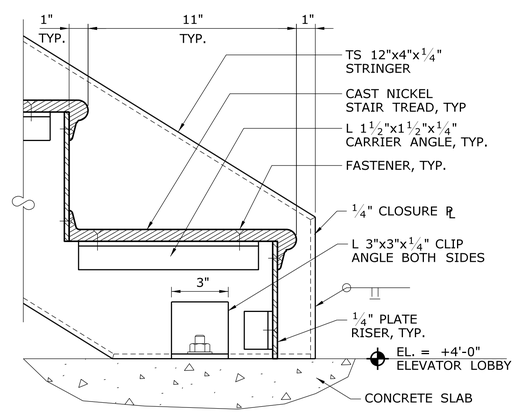

SECTION — E / A-301

SCALE: 3"=1'-0"

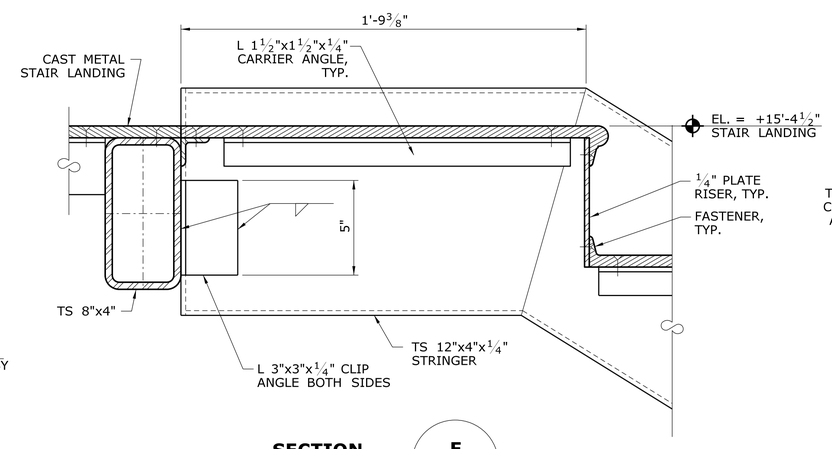

SECTION — F / A-523

SCALE: 3"=1'-0"

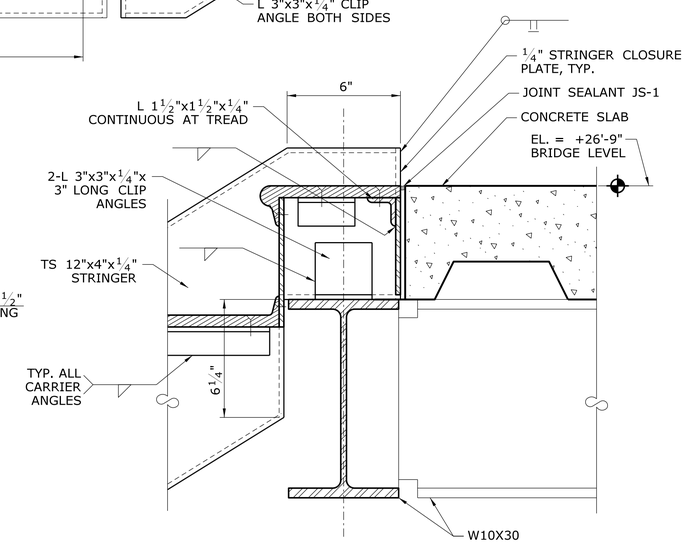

SECTION — G / A-523

SCALE: 3"=1'-0"

REV.	DATE	REVISION DESCRIPTION	SHEET NO.

Filename: FD_MSH_ARC_0027_0059_A-523.dgn

THE INFORMATION, INCLUDING ESTIMATED QUANTITIES OF WORK, SHOWN ON THESE SHEETS IS BASED ON LIMITED INVESTIGATIONS BY THE STATE AND IS IN NO WAY WARRANTED TO INDICATE THE CONDITIONS OF ACTUAL QUANTITIES OF WORK WHICH WILL BE REQUIRED.

Date Plotted: October 01, 2014

DESIGNER/DRAFTER: D. TUDRYN / R. WRIGHT

CHECKED BY: D. TUDRYN

SCALE AS NOTED

STATE OF CONNECTICUT
DEPARTMENT OF TRANSPORTATION

ENGINEER: BAKER ENGINEERING

APPROVED BY:

DATE:

PROJECT TITLE: SHORE LINE EAST RAILROAD STATIONS

TOWN: CLINTON

DRAWING TITLE: STAIR TOWER DETAILS - 10

PROJECT NO. 310-0059

DRAWING NO. A-523

SHEET NO. 04.54

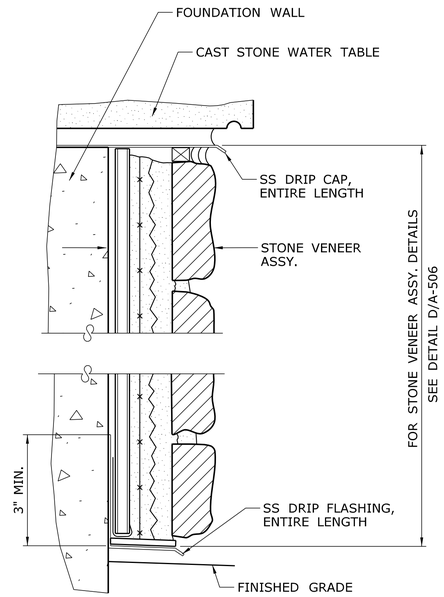

STONE VENEER DETAIL - STAIR TOWER WALLS (A / A-524)

SCALE: N.T.S.

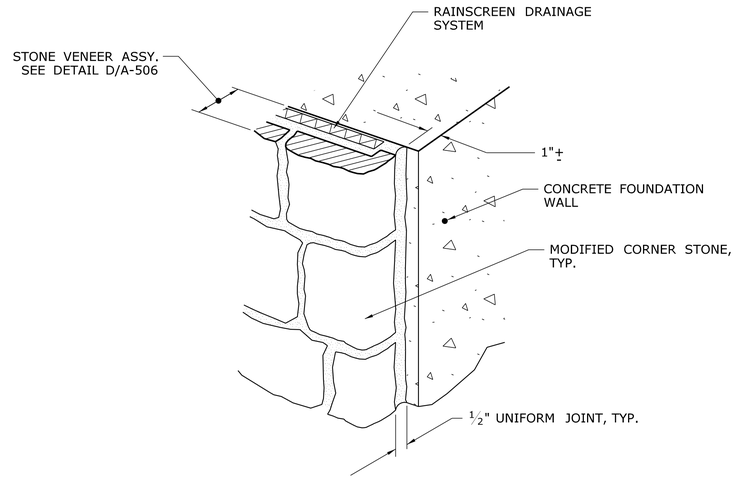

TYPICAL STONE VENEER END CLOSURE DETAIL (B / A-401)

SCALE: N.T.S.

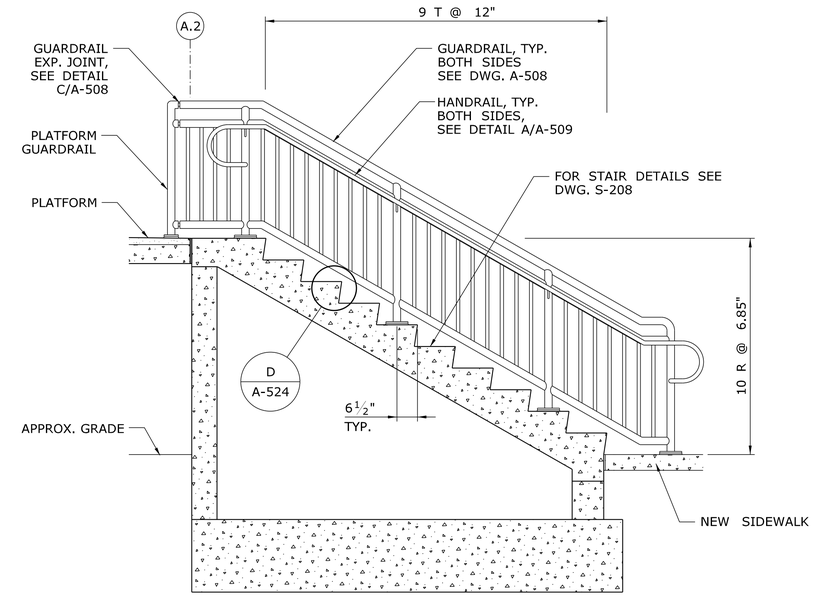

PLATFORM STAIR SECTION (C / A-400)

SCALE: ½"=1'-0"

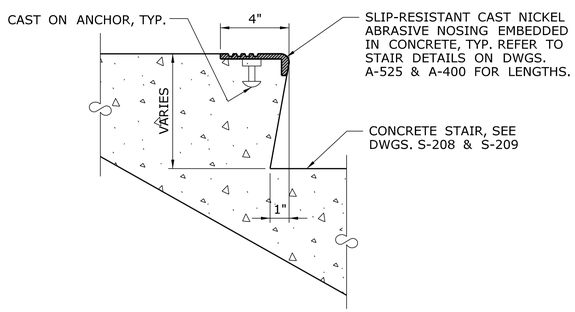

DETAIL (D / A-524) (D / A-525)

SCALE: 3"=1'-0"

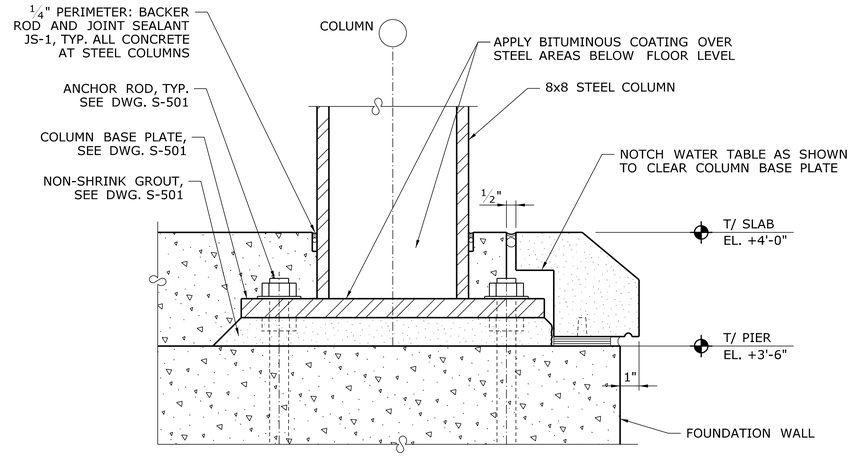

NOTE: USE THIS DETAIL WHERE COLUMN BASE PLATE INTERFERES WITH STANDARD SIZE WATER TABLE

MODIFIED WATERTABLE DETAIL (E / A-400) (E / A-401)

SCALE: 3"=1'-0"

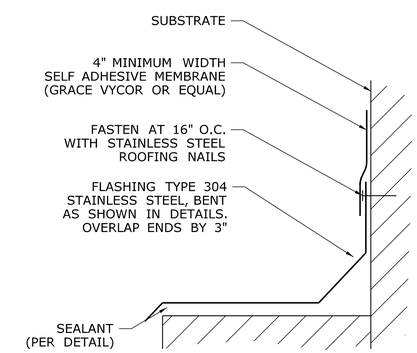

TYPICAL FLASHING DETAIL (F / A-524)

SCALE: N.T.S.

REV.	DATE	REVISION DESCRIPTION	SHEET NO.

Filename: FD_MSH_ARC_0027_0059_A-524.dgn

THE INFORMATION, INCLUDING ESTIMATED QUANTITIES OF WORK, SHOWN ON THESE SHEETS IS BASED ON LIMITED INVESTIGATIONS BY THE STATE AND IS IN NO WAY WARRANTED TO INDICATE THE CONDITIONS OF ACTUAL QUANTITIES OF WORK WHICH WILL BE REQUIRED.

Date Plotted: October 01, 2014

DESIGNER/DRAFTER: D. TUDRYN / R. WRIGHT
CHECKED BY: D. TUDRYN
SCALE AS NOTED

STATE OF CONNECTICUT
DEPARTMENT OF TRANSPORTATION

ENGINEER: BAKER ENGINEERING
APPROVED BY:
DATE:

PROJECT TITLE: **SHORE LINE EAST RAILROAD STATIONS**

TOWN: **CLINTON**

DRAWING TITLE: **STAIR TOWER DETAILS - 11**

PROJECT NO. **310-0059**
DRAWING NO. **A-524**
SHEET NO. **04.55**

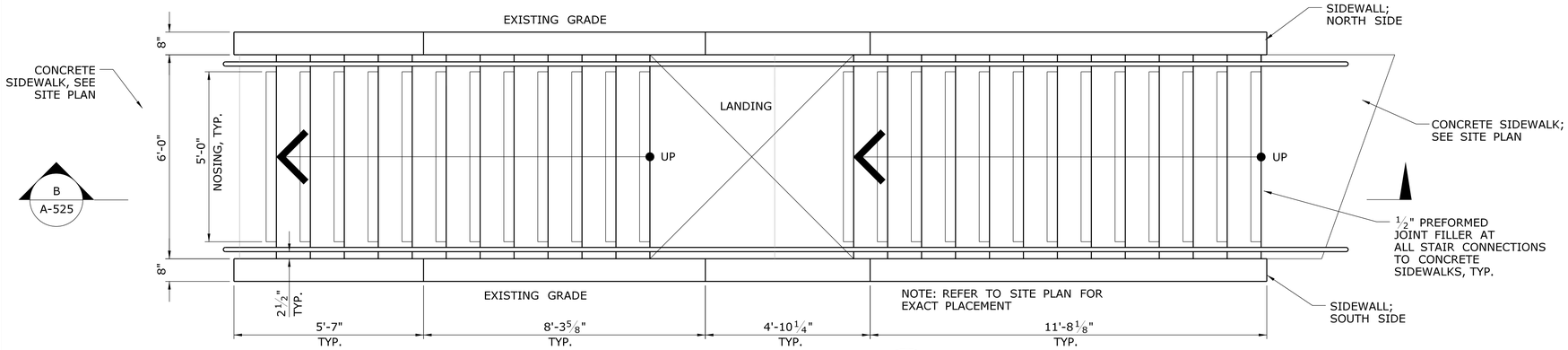

SITE STAIR PLAN — A / A-525

SCALE: ½"=1'-0"

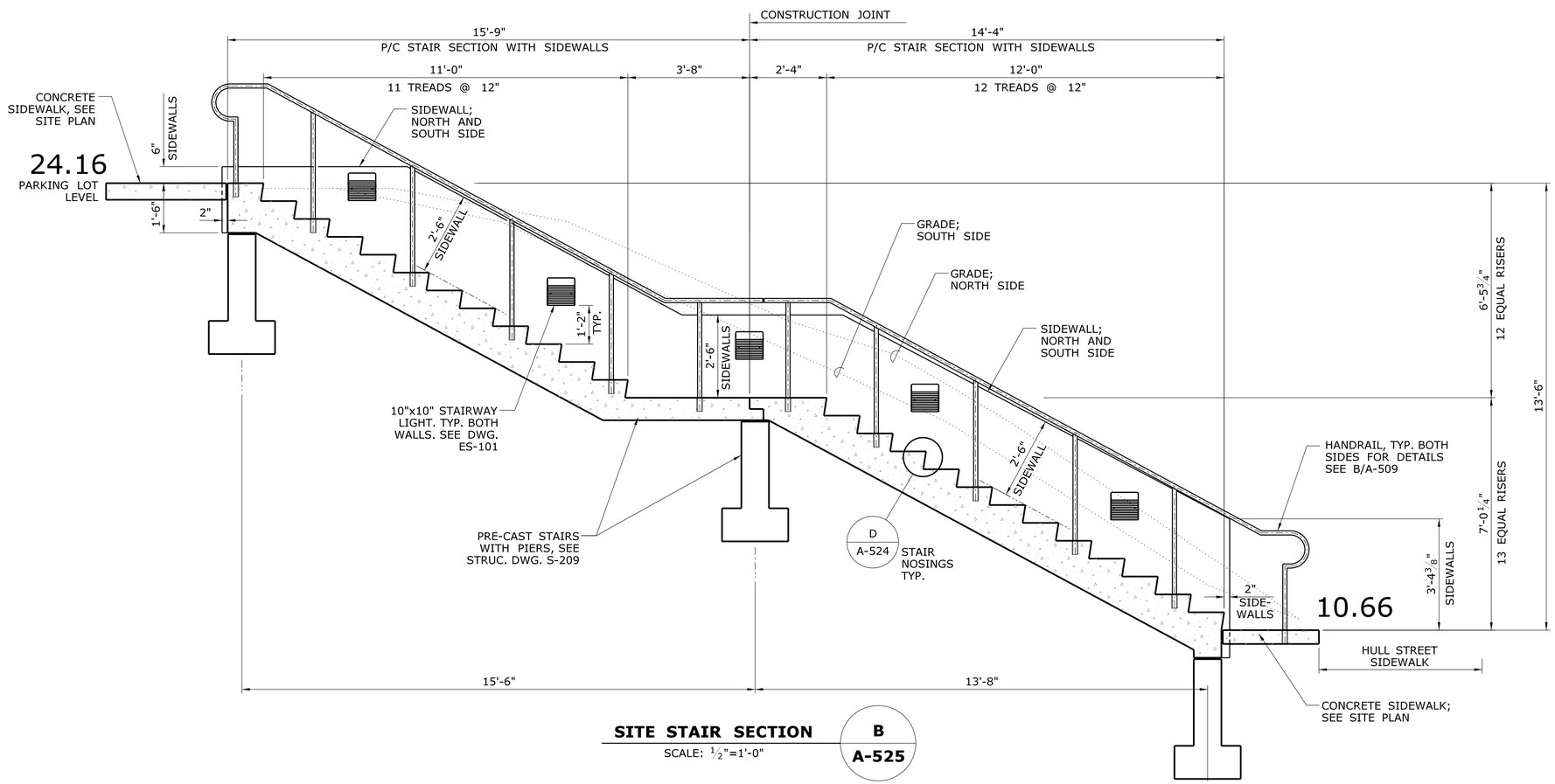

SITE STAIR SECTION — B / A-525

SCALE: ½"=1'-0"

REV.	DATE	REVISION DESCRIPTION	SHEET NO.

Filename: FD_MSH_ARC_0027_0059_A-525.dgn

THE INFORMATION, INCLUDING ESTIMATED QUANTITIES OF WORK, SHOWN ON THESE SHEETS IS BASED ON LIMITED INVESTIGATIONS BY THE STATE AND IS IN NO WAY WARRANTED TO INDICATE THE CONDITIONS OF ACTUAL QUANTITIES OF WORK WHICH WILL BE REQUIRED.

Date Plotted: October 01, 2014

DESIGNER/DRAFTER: D. TUDRYN / R. WRIGHT

CHECKED BY: D. TUDRYN

SCALE AS NOTED

STATE OF CONNECTICUT
DEPARTMENT OF TRANSPORTATION

ENGINEER: BAKER ENGINEERING

APPROVED BY: DATE:

PROJECT TITLE: SHORE LINE EAST RAILROAD STATIONS

TOWN: CLINTON

DRAWING TITLE: SITE STAIR DETAILS

PROJECT NO. 310-0059

DRAWING NO. A-525

SHEET NO. 04.56

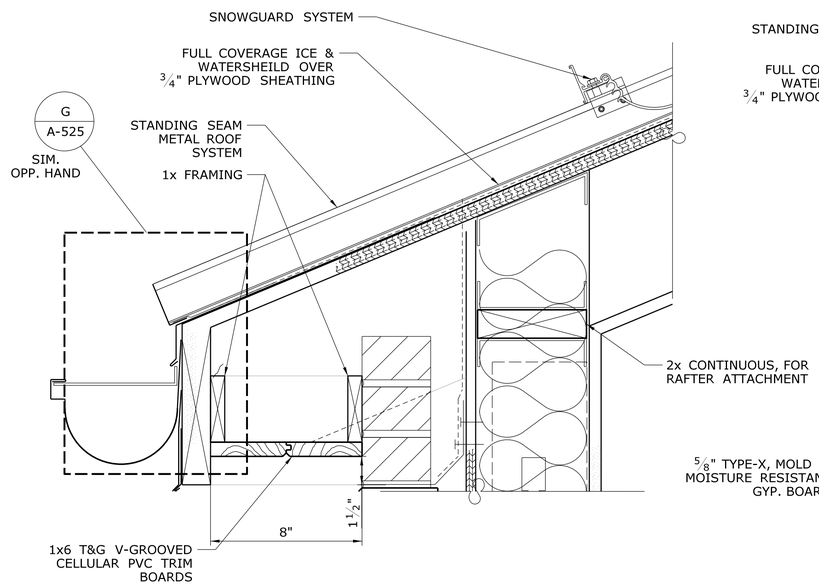

DETAIL A / A-305
SCALE: 3"=1'-0"

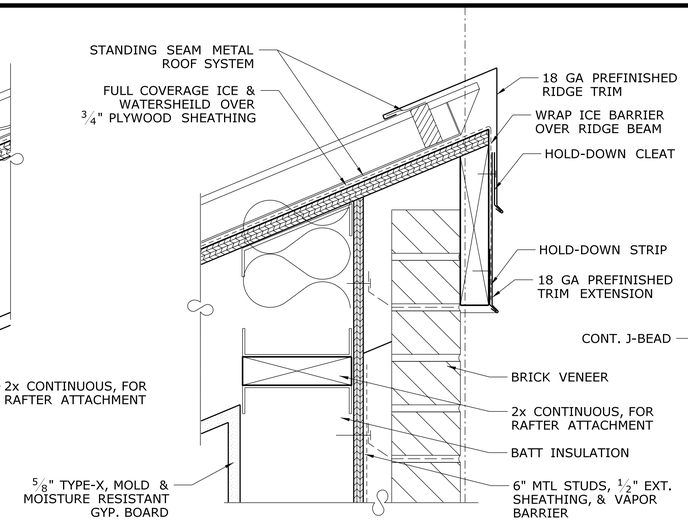

DETAIL B / A-305
SCALE: 3"=1'-0"

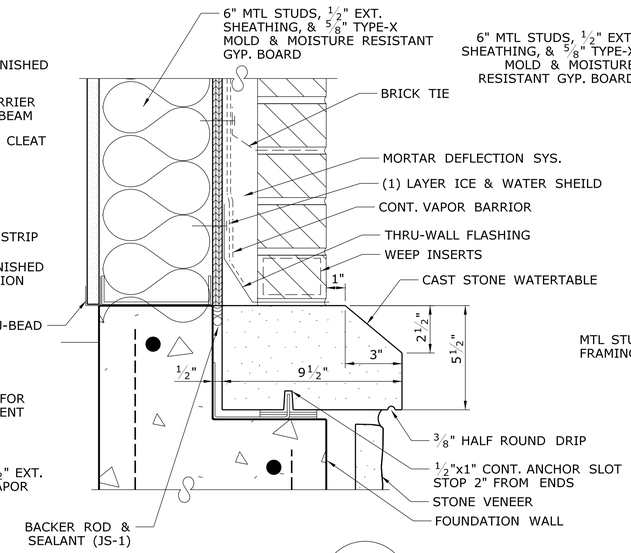

DETAIL C / A-305
SCALE: 3"=1'-0"

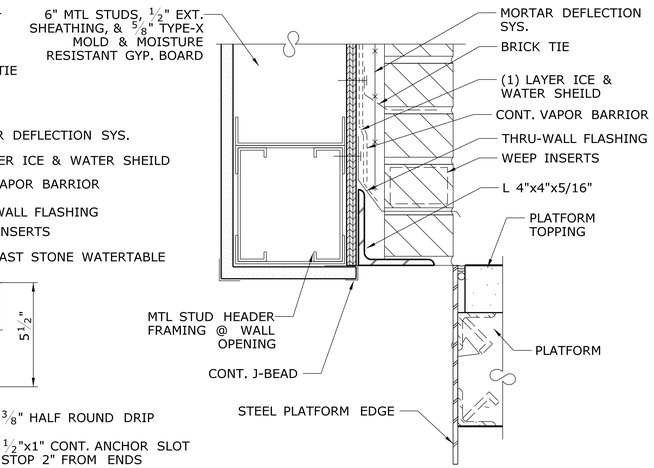

DETAIL D / A-304
SCALE: 3"=1'-0"

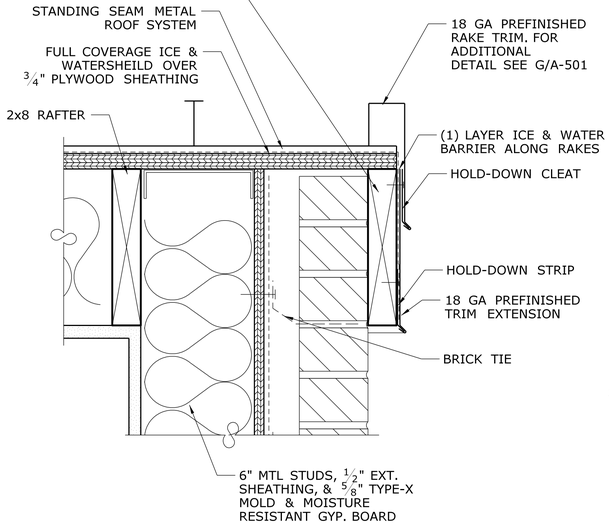

DETAIL E / A-305
SCALE: 3"=1'-0"

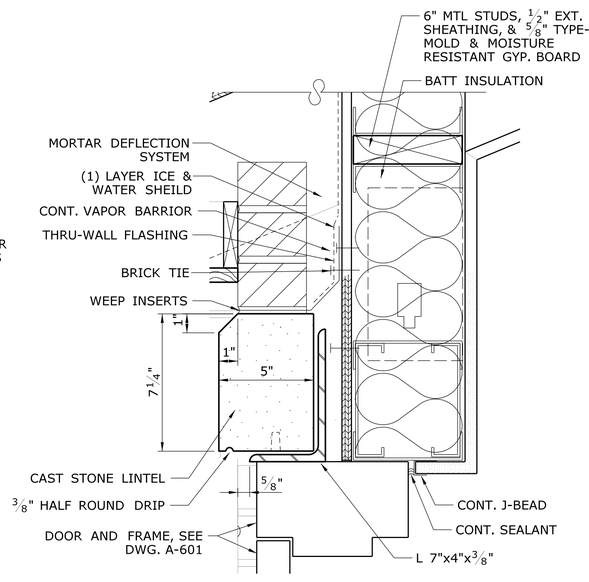

DETAIL F / A-305
SCALE: 3"=1'-0"

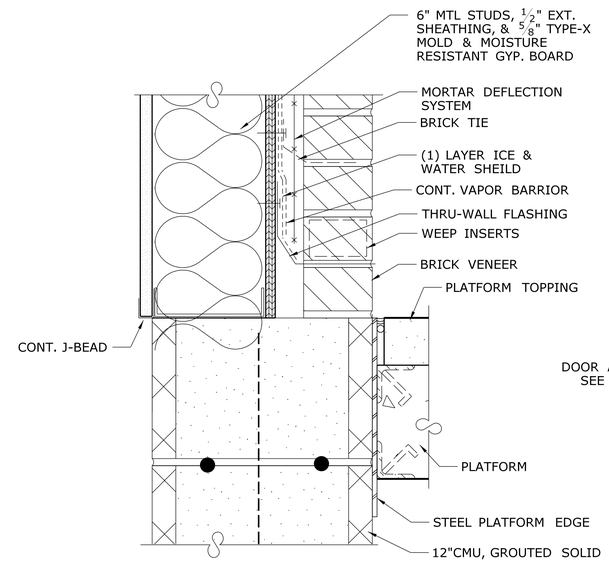

DETAIL G / A-305
SCALE: 3"=1'-0"

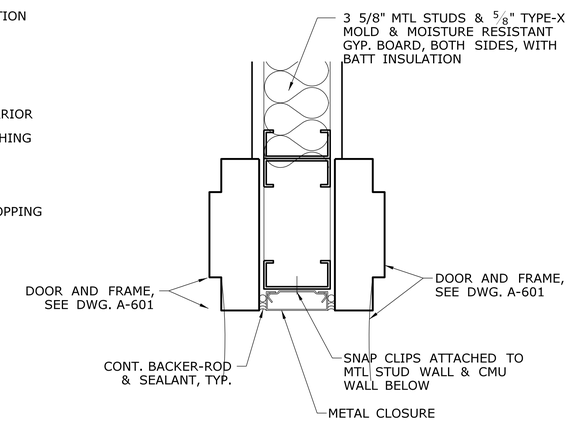

DETAIL H / A-405
SCALE: 3"=1'-0"

REV.	DATE	REVISION DESCRIPTION	SHEET NO.

Filename: FD_MSH_ARC_0027_0059_A-526.dgn

THE INFORMATION, INCLUDING ESTIMATED QUANTITIES OF WORK, SHOWN ON THESE SHEETS IS BASED ON LIMITED INVESTIGATIONS BY THE STATE AND IS IN NO WAY WARRANTED TO INDICATE THE CONDITIONS OF ACTUAL QUANTITIES OF WORK WHICH WILL BE REQUIRED.

Date Plotted: October 01, 2014

DESIGNER/DRAFTER: D. TUDRYN / R. WRIGHT
CHECKED BY: D. TUDRYN
SCALE AS NOTED

STATE OF CONNECTICUT
DEPARTMENT OF TRANSPORTATION

ENGINEER: BAKER ENGINEERING
APPROVED BY:
DATE:

PROJECT TITLE:
SHORE LINE EAST RAILROAD STATIONS

TOWN: **CLINTON**

DRAWING TITLE: **MAINTENANCE CLOSET DETAILS**

PROJECT NO. 310-0059
DRAWING NO. A-526
SHEET NO. 04.57

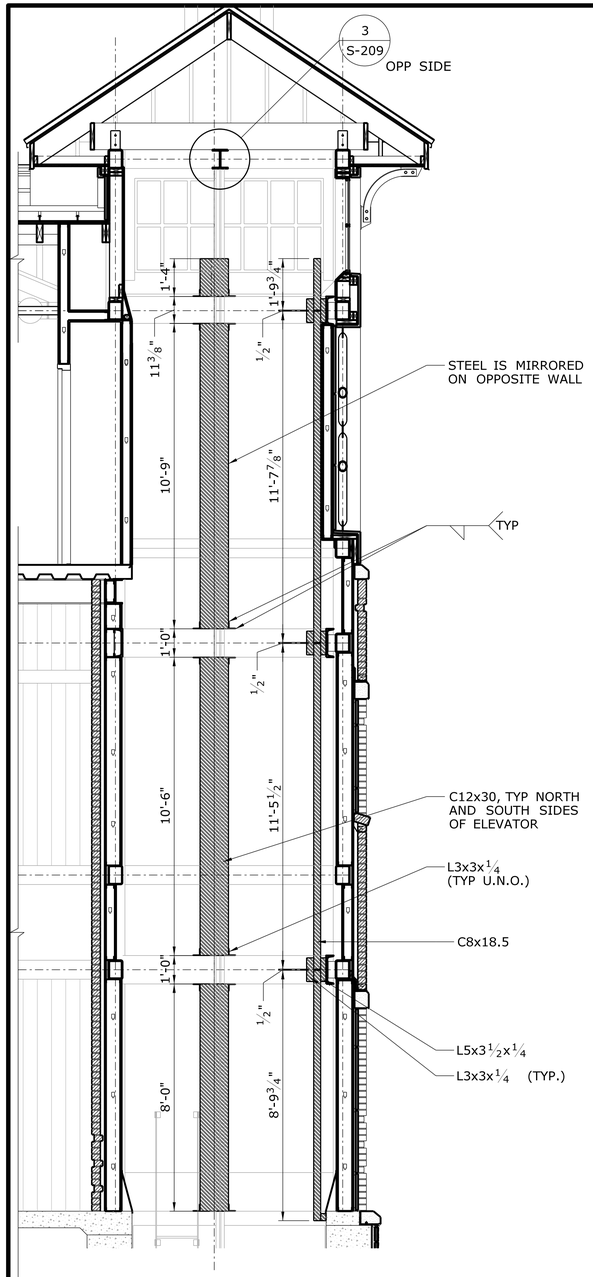

1 A-527 **ELEVATOR STEEL SECTION**

SCALE: 3/8"=1'-0"

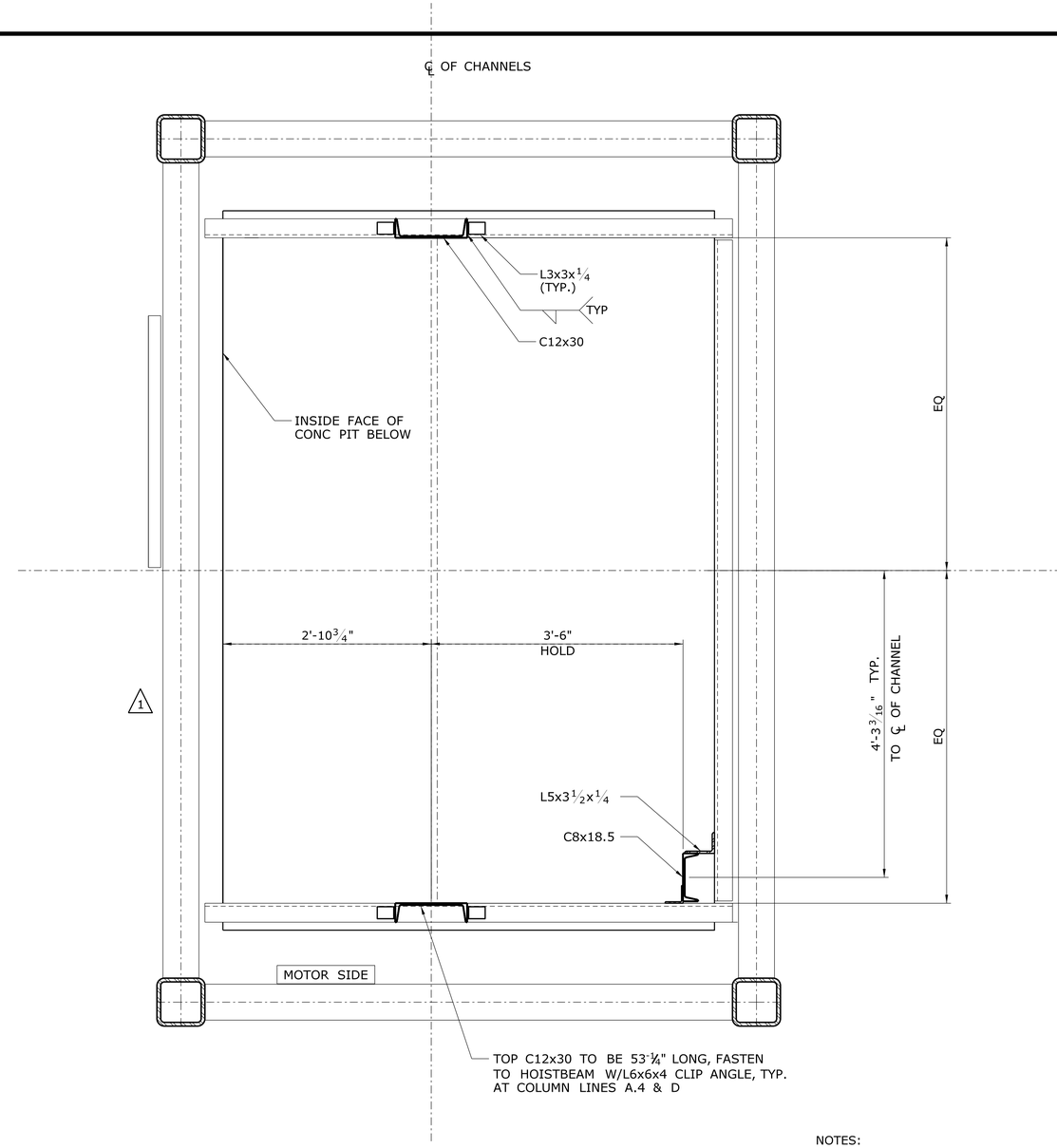

2 A-527 **ELEVATOR STEEL PLAN**

SCALE:1"=1'-0"

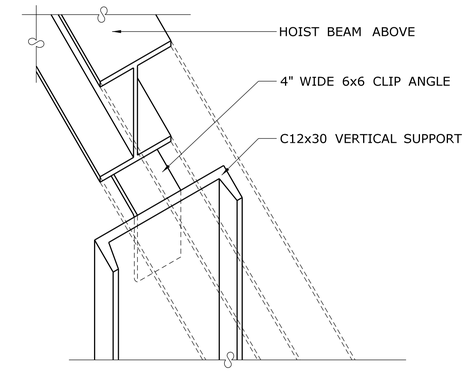

3 S-527 **HOISTBEAM CONNECTION DETAIL**

SCALE: N.T.S.

NOTES:

1. ALL STEEL MEMBERS SHOULD BE GALVANIZED OR RECIEVE 3 STEP HIGH PERFORMANCE COATING SYSTEM
2. PLAN SHOWS NORTH SIDE ELEVATOR, STEEL SHOULD BE MIRRORED FOR SOUTH ELEVATOR
3. CONTRACTOR SHALL VERIFY ADEQUACY AND LOCATIONS OF STEEL ELEVATOR GUIDE RAIL SUPPPORT & WITH ELEVATOR MANUFACTURER PRIOR TO FABRICATION.

REV.	DATE	REVISION DESCRIPTION	SHEET NO.

Filename: FD_MSH_ARC_0027_0059_A-527.dgn

THE INFORMATION, INCLUDING ESTIMATED QUANTITIES OF WORK, SHOWN ON THESE SHEETS IS BASED ON LIMITED INVESTIGATIONS BY THE STATE AND IS IN NO WAY WARRANTED TO INDICATE THE CONDITIONS OF ACTUAL QUANTITIES OF WORK WHICH WILL BE REQUIRED.

Date Plotted: October 01, 2014

DESIGNER/DRAFTER: ALD

CHECKED BY: D. TUDRYN

SCALE AS NOTED

STATE OF CONNECTICUT
DEPARTMENT OF TRANSPORTATION

ENGINEER: BAKER ENGINEERING

APPROVED BY:

DATE:

PROJECT TITLE: **SHORE LINE EAST RAILROAD STATIONS**

TOWN: **CLINTON**

DRAWING TITLE: **MAINTENANCE CLOSET DETAILS**

PROJECT NO. **310-0059**

DRAWING NO. **A-527**

SHEET NO. **04.58**

FINISH SCHEDULE

P1	STANDING SEAM ROOF, FLASHING, CUPOLA ROOF, AND EXPOSED ROOF ACCESSORIES
P2	CANOPY STEEL
P2	GUARDRAIL, SIGN FRAMES, HANDRAILS, TAMS MTG. COMPONENTS AND POLES
P3	WINDOW FRAMES AND HARDWARE
P4	WOOD DECKING, RAFTERS, AND MISC. EXPOSED WOOD ITEMS
P1	GUTTERS, DOWNSPOUTS, AND MOUNTING HARDWARE
P2	STAIR TOWER - CURVED BRACKETS AND HARDWARE
P5	FIBER-CEMENT SIDING
P3	STAIR TOWER - TRIM
P6	STAIR TOWER - STAIRWAY COMPONENTS (EXCEPT RAILINGS)
P7	STAIR TOWER - STAIRWAY RAILINGS
P7	ELEVATOR TOWER - METAL CLADDING
P5	ELEVATOR TOWER - INSET METAL PANELS
P3	BRIDGE - STRUCT. STEEL INCLUDING RAFTERS, TRUSS MEMBERS, COAMING
P7	PLATFORM STEEL - BACK BAND
P2	PLATFORM - STAIRS AND LADDERS
P3	ELEVATOR TOWER EXPOSED CROSS BRACES, SHELTER CROSS BRACING
P9	INTERIOR DRYWALL AND TONGUE & GROOVE CELLULAR PVC SHEATHING
P10	DOORS AND FRAMES
P8	BENCHES AND TRASH CANS
P7	CUPOLA
P2	RAMP ROOF STEEL

FINISHES

P1	COLOR: TO MATCH SHERWIN WILLIAMS 'SHIPYARD GRAY' SW2139
P2	COLOR: TO MATCH TNEMEC 'HUNTER GREEN' #PL10
P3	COLOR: TO MATCH BENJAMIN MOORE 'LANCASTER WHITEWASH' #HC-174
P4	STAIN: TO MATCH MANUFACTURER'S 'NATURAL'
P5	COLOR: TO MATCH BENJAMIN MOORE 'CROWN POINT SAND' #HC-90
P6	COLOR: TO MATCH BEJAMINE MOORE 'PROVIDENCE OLIVE' #HC-98
P7	COLOR: TO MATCH BENJAMIN MOORE 'HANCOCK GRAY' #HC-97
P8	COLOR: MANUFACTURER'S STANDARD BLACK
P9	COLOR: TO MATCH BENJAMIN MOORE 'SANDY HOOK GRAY' #HC-108
P10	COLOR: MANUFACTURER'S STAINLESS

FINISH NOTES

1. SEE SPECIFICATION 09900 "PAINTING" AND 09960 "HIGH PERFORMANCE COATINGS" FOR MORE DETAILS REGARDING PAINT FINISHES, PRIMERS, AND APPLICATIONS.
2. ALL FINISHES ARE SPECIFIED AS 'OR EQUAL'.

DOOR SCHEDULE

DOOR #	DOOR OPENING SIZE (WIDTH X HEIGHT X THICK)	DOOR			FRAME						HARD-WARE SET NO.	REMARKS
		TYPE	MATERIAL	FINISH	TYPE	MATERIAL	FINISH	HEAD	JAMB	SILL		
100-N	PAIR 3'-0" x 7'-0" x 1¾"	2	HM	STAINLESS STEEL	2	HM	STAINLESS STEEL	H2	J2	-	1	2-HOUR FIRE RATED
100-S	PAIR 3'-0" x 7'-0" x 1¾"	2	HM	STAINLESS STEEL	2	HM	STAINLESS STEEL	H2	J2	-	1	2-HOUR FIRE RATED
101-N	3'-6" x 7'-0" x 1¾"	1	HM	STAINLESS STEEL	1	HM	STAINLESS STEEL	H1	J1	-	2	1-HOUR FIRE RATED
101-S	3'-6" x 7'-0" x 1¾"	1	HM	STAINLESS STEEL	1	HM	STAINLESS STEEL	H1	J1	-	2	1-HOUR FIRE RATED
102-N	PAIR 2'-6" x 7'-0" x 1¾"	3	HM	STAINLESS STEEL	5	HM	STAINLESS STEEL	H4	J3			NON-RATED
102-S	2'-8" x 7'-0" x 1¾"	3	HM	STAINLESS STEEL	3	HM	STAINLESS STEEL	H3	J3			NON-RATED
103-S	2'-8" x 7'-0" x 1¾"	3	HM	STAINLESS STEEL	3	HM	STAINLESS STEEL	H3	J3			NON-RATED
103-N	4'-8" x 7'-0" x 1¾"	4	HM	STAINLESS STEEL	4	HM	STAINLESS STEEL	H4	J3			NON-RATED
104-S	PAIR 3'-6" x 7'-0" x 1¾"	4	HM	STAINLESS STEEL	4	HM	STAINLESS STEEL	H4	J3			NON-RATED

SEE DRAWINGS A-101, A-404, & A-405 FOR DOOR LOCATIONS

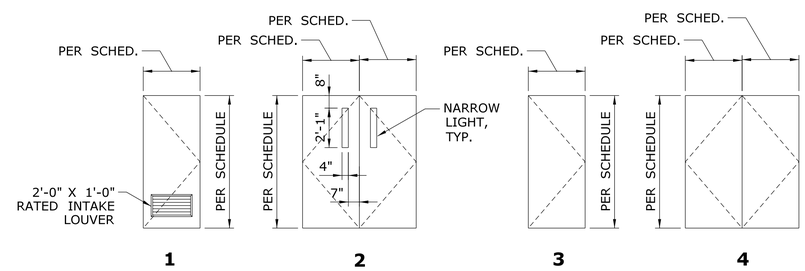

DOOR TYPES

SCALE: ¼" = 1'-0"

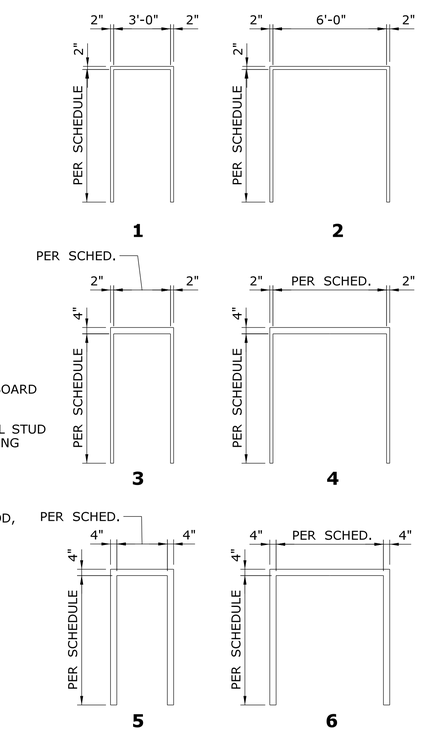

FRAME TYPES

SCALE: ¼" = 1'-0"

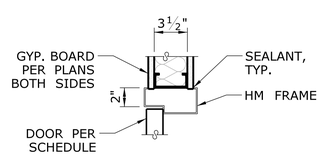

H1

SCALE: 1½" = 1'-0"

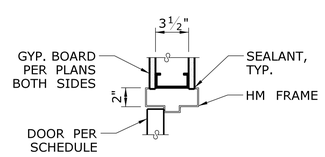

H2

SCALE: 1½" = 1'-0"

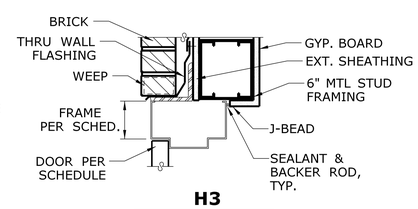

H3

SCALE: 1½" = 1'-0"

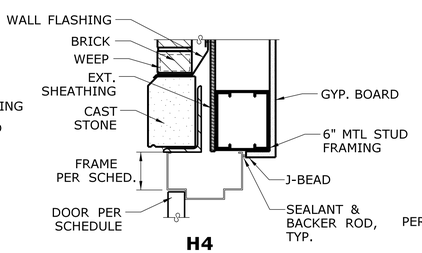

H4

SCALE: 1½" = 1'-0"

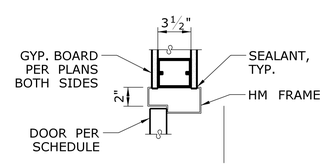

J1

SCALE: 1½" = 1'-0"

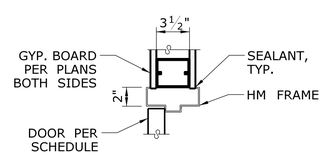

J2

SCALE: 1½" = 1'-0"

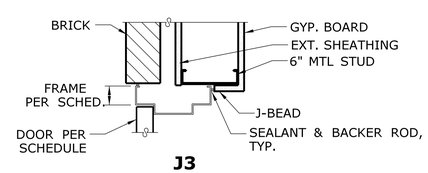

J3

SCALE: 1½" = 1'-0"

REV.	DATE	REVISION DESCRIPTION	SHEET NO.

Filename: FD_MSH_ARC_0027_0059_A-600.dgn

THE INFORMATION, INCLUDING ESTIMATED QUANTITIES OF WORK, SHOWN ON THESE SHEETS IS BASED ON LIMITED INVESTIGATIONS BY THE STATE AND IS IN NO WAY WARRANTED TO INDICATE THE CONDITIONS OF ACTUAL QUANTITIES OF WORK WHICH WILL BE REQUIRED.

Date Plotted: October 01, 2014

DESIGNER/DRAFTER: D. TUDRYN / R. WRIGHT
CHECKED BY: D. TUDRYN
SCALE AS NOTED

STATE OF CONNECTICUT
DEPARTMENT OF TRANSPORTATION

ENGINEER: BAKER ENGINEERING
APPROVED BY:
DATE:

PROJECT TITLE: SHORE LINE EAST RAILROAD STATIONS

TOWN: CLINTON

DRAWING TITLE: SCHEDULES

PROJECT NO. 310-0059
DRAWING NO. A-600
SHEET NO. 04.59

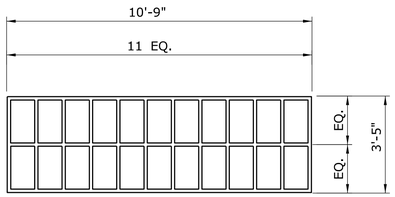

FROSTED GLAZING

W1

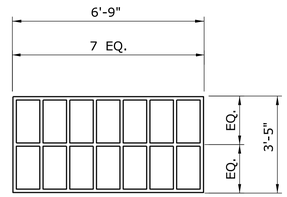

FROSTED GLAZING

W2

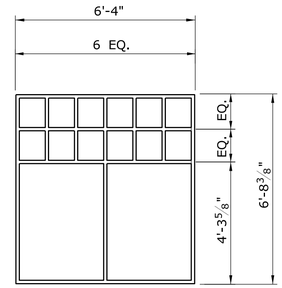

W3

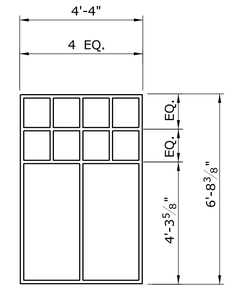

W4

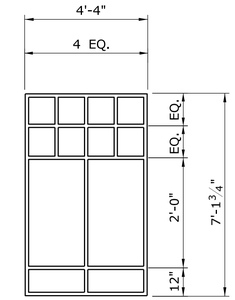

W5

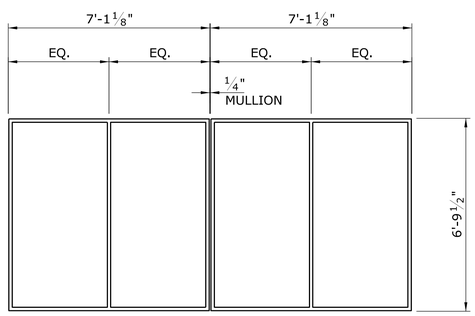

W6

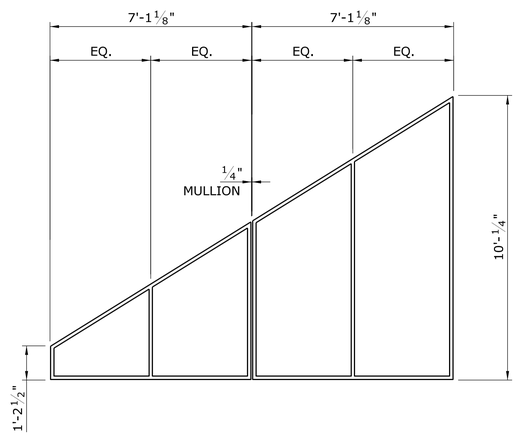

W7

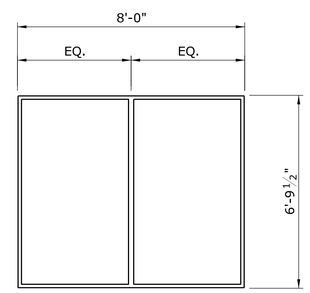

W8

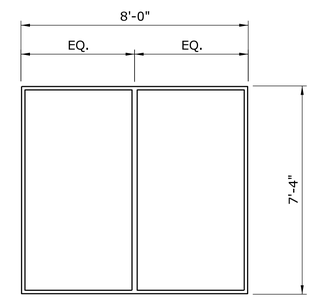

W9

WINDOW TYPES

SCALE: 3/8" = 1'-0"

NOTES:

1. OUTSIDE DIMENSIONS SHOWN ARE OPENING SIZES.
2. SEE ELEVATION DRAWINGS FOR LOCATIONS.
3. ALL GLAZING TO BE LAMINATED AND TEMPERED.
4. ALL GLAZING TO BE INSTALLED WITH INTERIOR GLAZING STOPS, REMOVABLE FROM THE INTERIOR, TYP.

REV.	DATE	REVISION DESCRIPTION	SHEET NO.

Filename: FD_MSH_ARC_0027_0059_A-601.dgn

THE INFORMATION, INCLUDING ESTIMATED QUANTITIES OF WORK, SHOWN ON THESE SHEETS IS BASED ON LIMITED INVESTIGATIONS BY THE STATE AND IS IN NO WAY WARRANTED TO INDICATE THE CONDITIONS OF ACTUAL QUANTITIES OF WORK WHICH WILL BE REQUIRED.

Date Plotted: October 01, 2014

DESIGNER/DRAFTER: D. TUDRYN / R. WRIGHT

CHECKED BY: D. TUDRYN

SCALE AS NOTED

STATE OF CONNECTICUT
DEPARTMENT OF TRANSPORTATION

ENGINEER: BAKER ENGINEERING

APPROVED BY:

DATE:

PROJECT TITLE: SHORE LINE EAST RAILROAD STATIONS

TOWN: CLINTON

DRAWING TITLE: WINDOW TYPES - 1

PROJECT NO. 310-0059

DRAWING NO. A-601

SHEET NO. 04.60

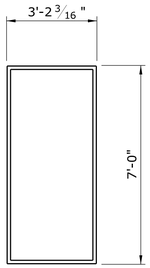

W10

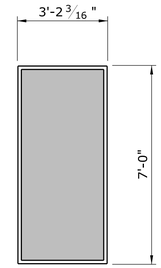

FROSTED GLAZING

W10A

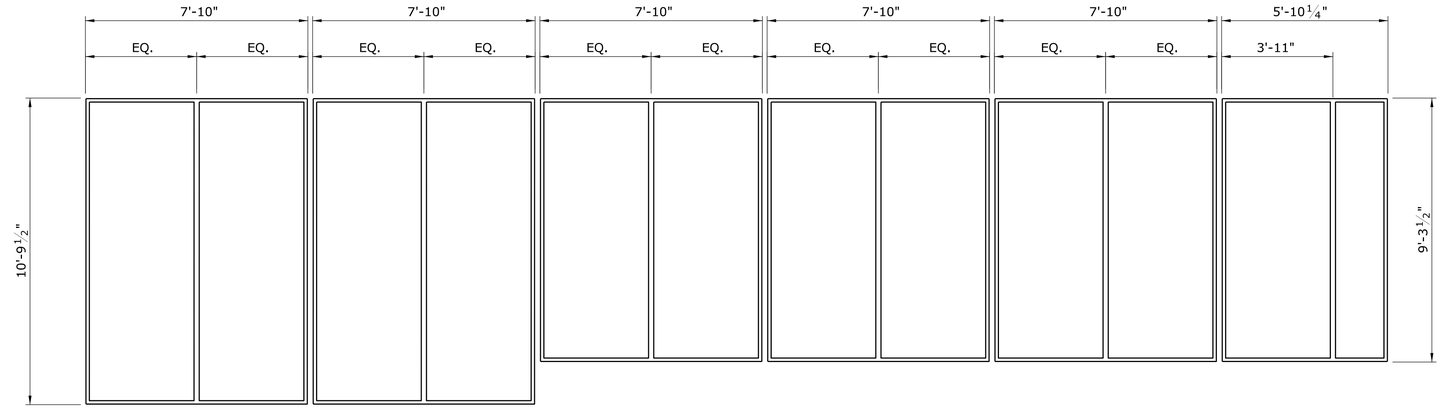

W11

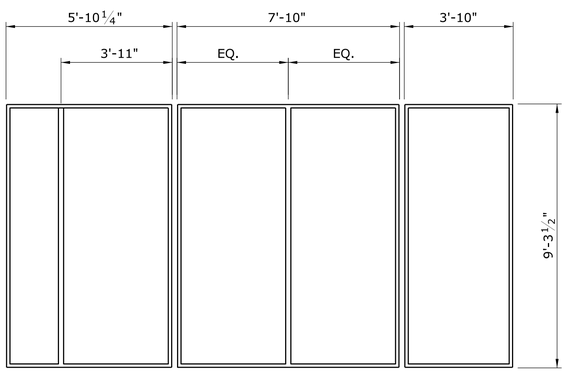

W12

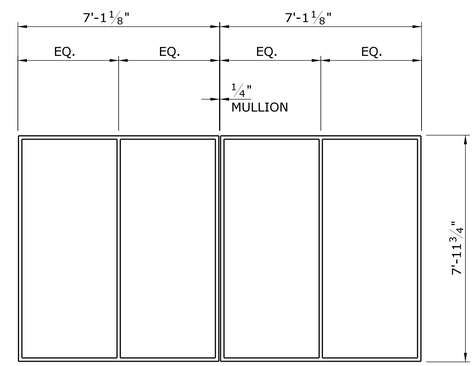

W13

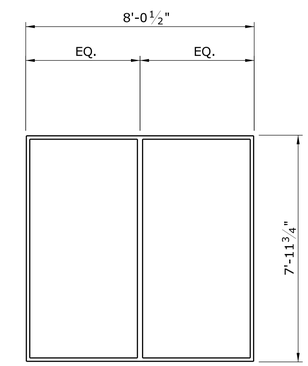

W14

WINDOW TYPES

SCALE: 3/8" = 1'-0"

NOTES:

1. OUTSIDE DIMENSIONS SHOWN ARE OPENING SIZES.
2. SEE ELEVATION DRAWINGS FOR LOCATIONS.
3. ALL GLAZING TO BE LAMINATED AND TEMPERED.

REV.	DATE	REVISION DESCRIPTION	SHEET NO.

Filename: FD_MSH_ARC_0027_0059_A-602.dgn

THE INFORMATION, INCLUDING ESTIMATED QUANTITIES OF WORK, SHOWN ON THESE SHEETS IS BASED ON LIMITED INVESTIGATIONS BY THE STATE AND IS IN NO WAY WARRANTED TO INDICATE THE CONDITIONS OF ACTUAL QUANTITIES OF WORK WHICH WILL BE REQUIRED.

Date Plotted: October 01, 2014

DESIGNER/DRAFTER: D. TUDRYN / R. WRIGHT

CHECKED BY: D. TUDRYN

SCALE AS NOTED

STATE OF CONNECTICUT
DEPARTMENT OF TRANSPORTATION

ENGINEER: BAKER ENGINEERING

APPROVED BY:

DATE:

PROJECT TITLE:

SHORE LINE EAST
RAILROAD STATIONS

TOWN: CLINTON

DRAWING TITLE: WINDOW TYPES - 2

PROJECT NO. 310-0059

DRAWING NO. A-602

SHEET NO. 04.61

05 - SIGNAGE

INDEX OF DRAWINGS

DRAWING NUMBER	DRAWING TITLE
SNI-001	DRAWING INDEX
N-101	NORTHEAST SITE SIGN LOCATION PLAN
N-102	PLATFORM SIGN LOCATION PLAN
N-103	BRIDGE OVERPASS SIGN LOCATION PLAN
N-201	SIGN GRAPHICS I
N-202	SIGN GRAPHICS II
N-501	SIGN MOUNTING I
N-502	SIGN MOUNTING II
N-503	SIGN TYPE "A"
N-504	SIGN TYPE "B"
N-505	SIGN TYPE "C"
N-601	SIGN SCHEDULE I

DESIGNED BY:

Baker

MICHAEL BAKER ENGINEERING, INC.
500 ENTERPRISE DRIVE
SUITE 2B
ROCKY HILL, CT 06067

REV.	DATE	REVISION DESCRIPTION	SHEET NO.
-	-	-	-
-	-	-	-
-	-	-	-
-	-	-	-
-	-	-	-
-	-	-	-

THE INFORMATION, INCLUDING ESTIMATED QUANTITIES OF WORK, SHOWN ON THESE SHEETS IS BASED ON LIMITED INVESTIGATIONS BY THE STATE AND IS IN NO WAY WARRANTED TO INDICATE THE CONDITIONS OF ACTUAL QUANTITIES OF WORK WHICH WILL BE REQUIRED.

Plotted Date: $DATE$

DESIGNER/DRAFTER: ALD

CHECKED BY: D.TUDRYN

STATE OF CONNECTICUT
DEPARTMENT OF TRANSPORTATION

Filename: $FILEA$

SIGNATURE/ BLOCK:

Baker
Michael Baker Engineering Inc.
500 Enterprise Drive
Suite 2B
Rocky Hill, CT 06067

STATE OF CONNECTICUT
DEPARTMENT OF TRANSPORTATION
No. 19079
LICENSED
PROFESSIONAL ENGINEER

PROJECT TITLE:

SHORELINE EAST
RAILROAD STATIONS

TOWN: CLINTON

DRAWING TITLE: RAILROAD STATIONS

PROJECT NO. 310-0059

DRAWING NO. SNI-001

SHEET NO. 05.01

Border Version: 11/14/08

Connecticut Department of Transportation
QA/QC Format Check

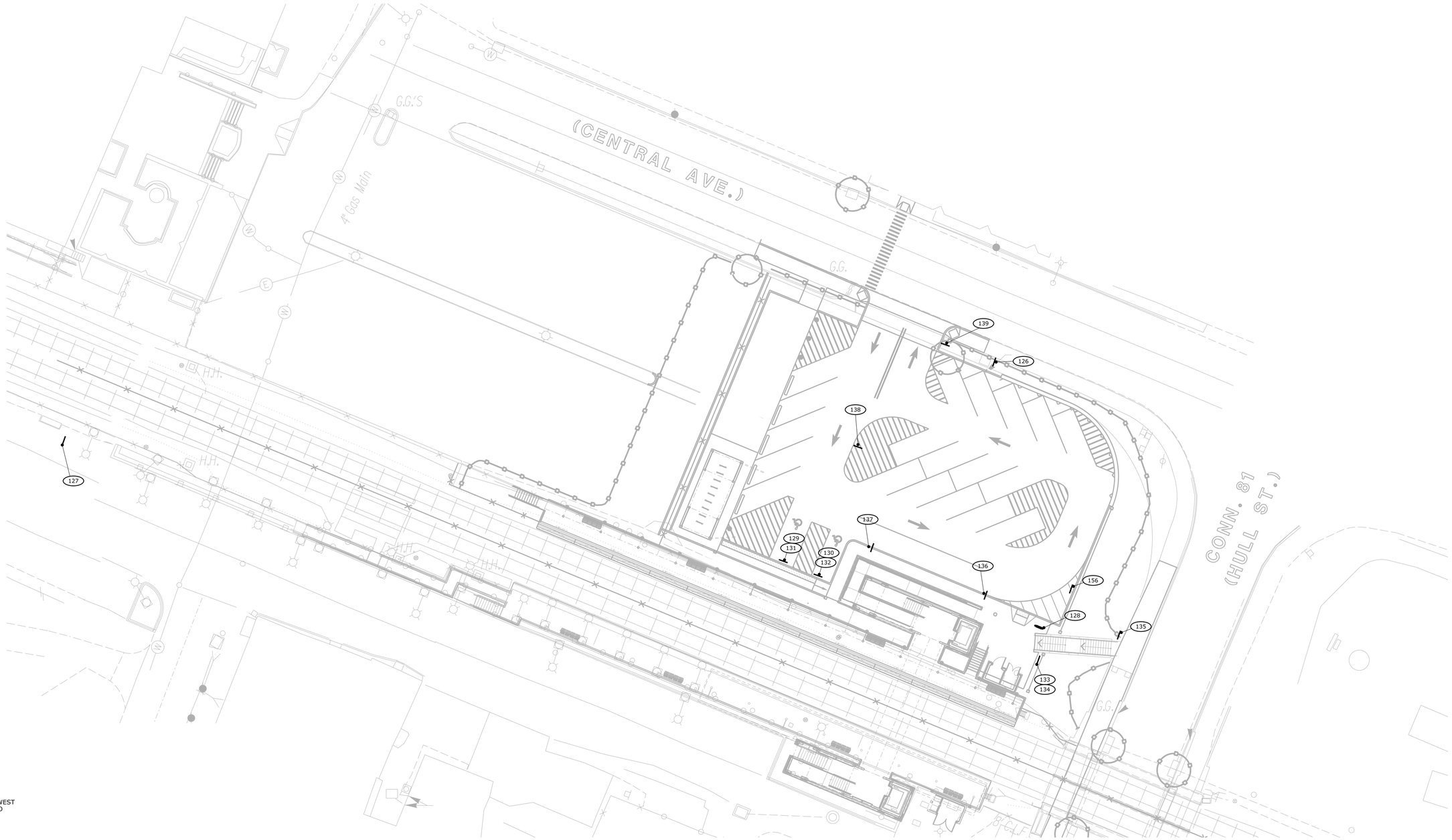

LOCATE AT WEST ENTRANCE TO STATION

N

SIGN LOCATION PLAN

SCALE: 1" = 20'-0"

NOTE: SEE N-601 FOR SIGN SCHEDULE

REV.	DATE	REVISION DESCRIPTION	SHEET NO.
-	-	-	-

Filename: FD_MSH_SGN_0027_0059_N-101.dgn

THE INFORMATION, INCLUDING ESTIMATED QUANTITIES OF WORK, SHOWN ON THESE SHEETS IS BASED ON LIMITED INVESTIGATIONS BY THE STATE AND IS IN NO WAY WARRANTED TO INDICATE THE CONDITIONS OF ACTUAL QUANTITIES OF WORK WHICH WILL BE REQUIRED.

Date Plotted: October 01, 2014

DESIGNER/DRAFTER: PB

CHECKED BY: MAR

SCALE IN FEET

0 20 40

SCALE 1"=20'

STATE OF CONNECTICUT
DEPARTMENT OF TRANSPORTATION

ENGINEER: BAKER ENGINEERING

APPROVED BY:

DATE:

STATE OF CONNECTICUT
JOHN H. DEWAN
34,1073
LICENSED
PROFESSIONAL ENGINEER

PROJECT TITLE:

SHORE LINE EAST RAILROAD STATIONS

TOWN: **CLINTON**

DRAWING TITLE: **NORTHEAST SITE SIGN LOCATION PLAN**

PROJECT NO. **310-0059**

DRAWING NO. **N-101**

SHEET NO. **05.02**

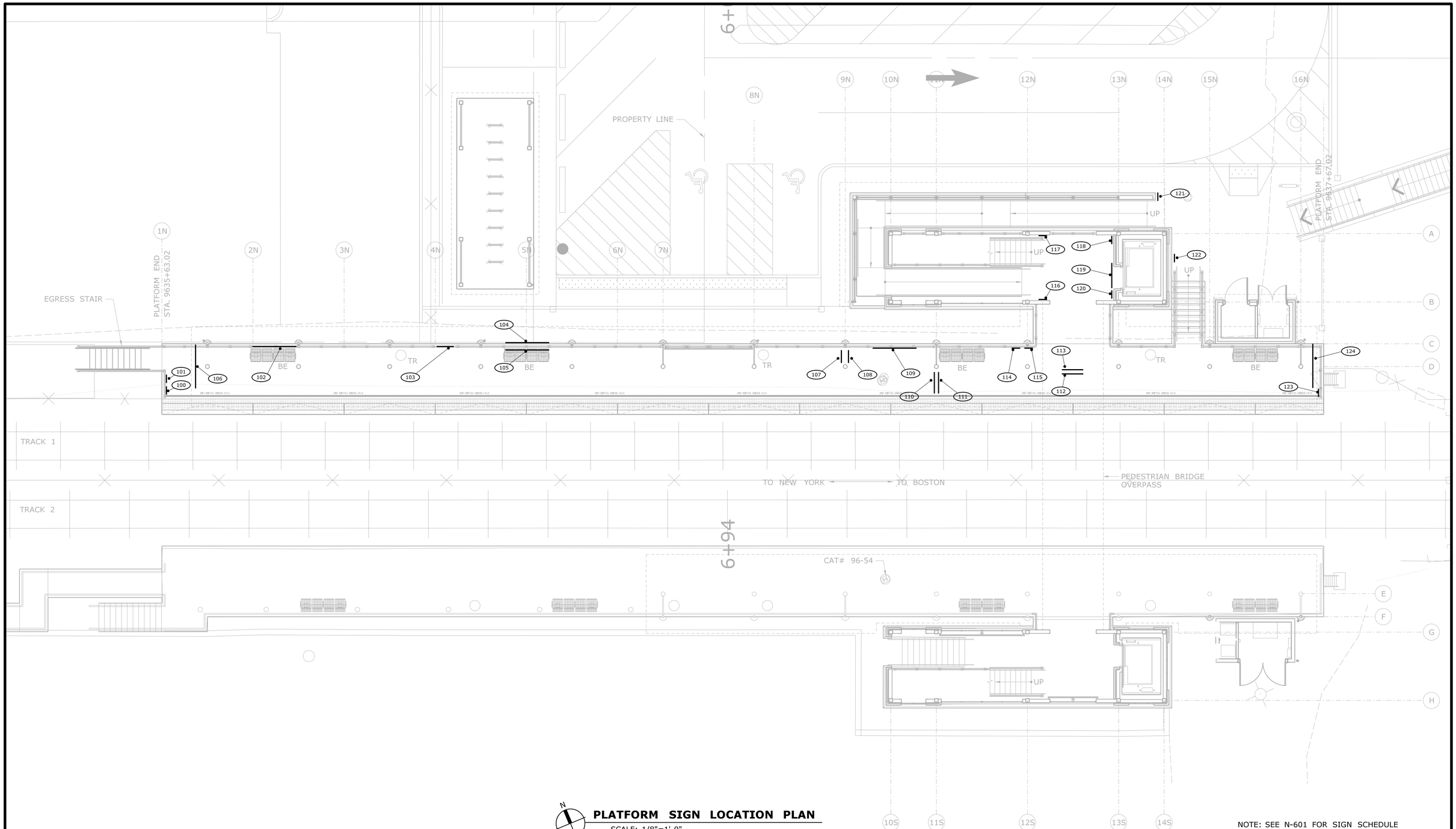

PLATFORM SIGN LOCATION PLAN

SCALE: 1/8"=1'-0"

NOTE: SEE N-601 FOR SIGN SCHEDULE

REV.	DATE	REVISION DESCRIPTION	SHEET NO.

Filename: FD_MSH_SGN_0027_0059_N-102.dgn

THE INFORMATION, INCLUDING ESTIMATED QUANTITIES OF WORK, SHOWN ON THESE SHEETS IS BASED ON LIMITED INVESTIGATIONS BY THE STATE AND IS IN NO WAY WARRANTED TO INDICATE THE CONDITIONS OF ACTUAL QUANTITIES OF WORK WHICH WILL BE REQUIRED.

Date Plotted: October 01, 2014

DESIGNER/DRAFTER: PB

CHECKED BY: MAR

SCALE AS NOTED

STATE OF CONNECTICUT
DEPARTMENT OF TRANSPORTATION

ENGINEER: BAKER ENGINEERING

APPROVED BY:

DATE:

STATE OF CONNECTICUT
M. OBLEZANSKI
M-18073
LICENSED
PROFESSIONAL ENGINEER

PROJECT TITLE:

SHORE LINE EAST RAILROAD STATIONS

TOWN: **CLINTON**

DRAWING TITLE: **PLATFORM SIGN LOCATION PLAN**

PROJECT NO. **310-0059**

DRAWING NO. **N-102**

SHEET NO. **05.03**

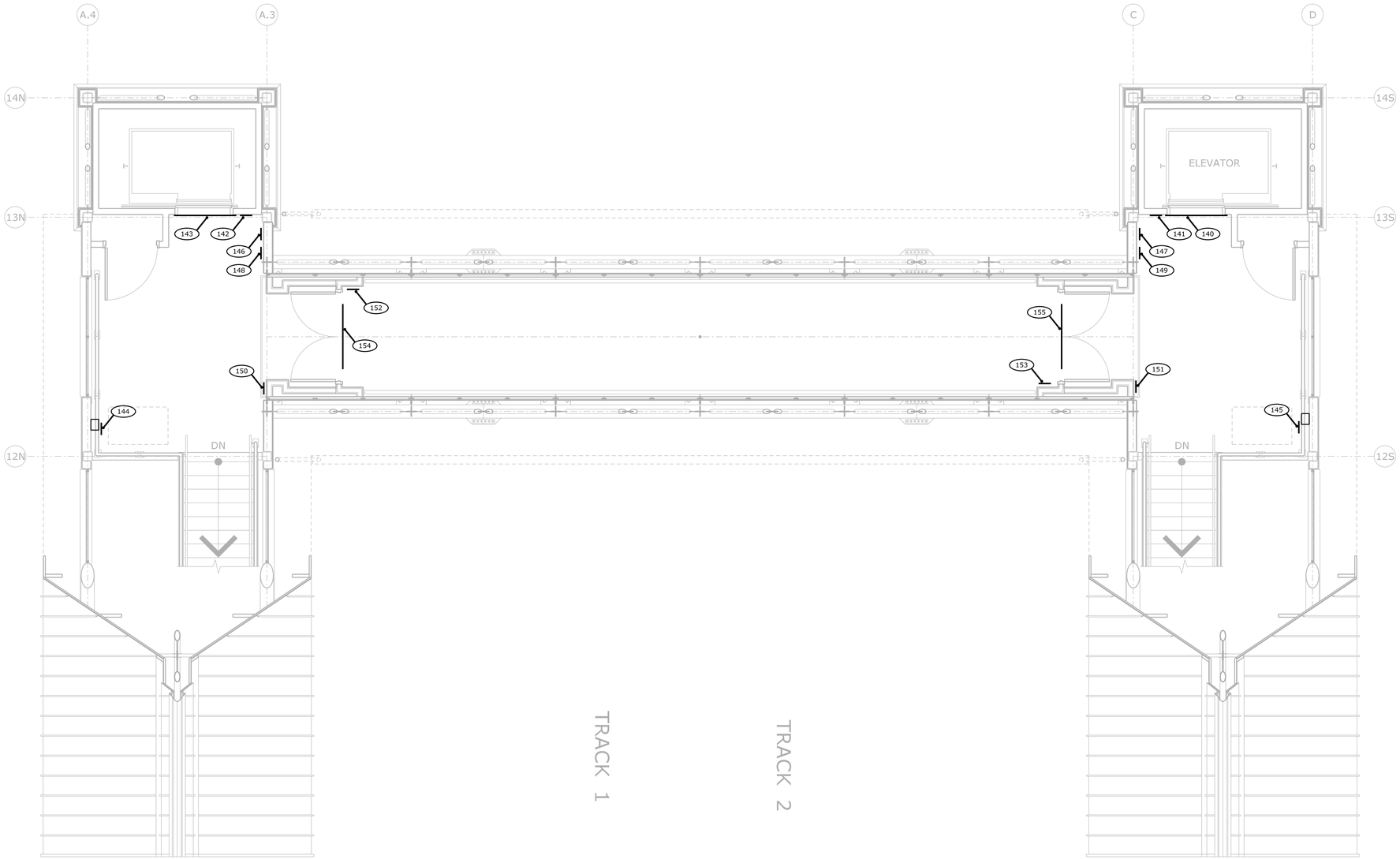

BRIDGE OVERPASS SIGN LOCATION PLAN

SCALE: 1/4" =1'-0"

NOTE: RAMP, PLATFORMS & PLATFORM CANOPIES BELOW ARE NOT SHOWN FOR CLARITY.

REV.	DATE	REVISION DESCRIPTION	SHEET NO.

Filename: FD_MSH_SGN_0027_0059_N-103.dgn

THE INFORMATION, INCLUDING ESTIMATED QUANTITIES OF WORK, SHOWN ON THESE SHEETS IS BASED ON LIMITED INVESTIGATIONS BY THE STATE AND IS IN NO WAY WARRANTED TO INDICATE THE CONDITIONS OF ACTUAL QUANTITIES OF WORK WHICH WILL BE REQUIRED.

Date Plotted: October 01, 2014

DESIGNER/DRAFTER: PB

CHECKED BY: MAR

SCALE AS NOTED

STATE OF CONNECTICUT
DEPARTMENT OF TRANSPORTATION

ENGINEER: BAKER ENGINEERING

APPROVED BY: DATE:

PROJECT TITLE:
SHORE LINE EAST
RAILROAD STATIONS

TOWN: CLINTON

DRAWING TITLE:
BRIDGE OVERPASS
SIGN LOCATION PLAN

PROJECT NO. 310-0059

DRAWING NO. N-103

SHEET NO. 05.04

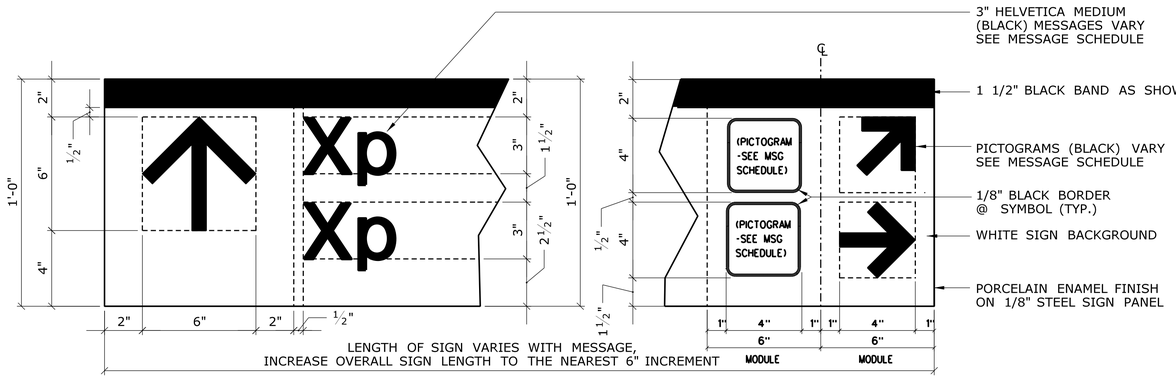

TYPE: DS-1

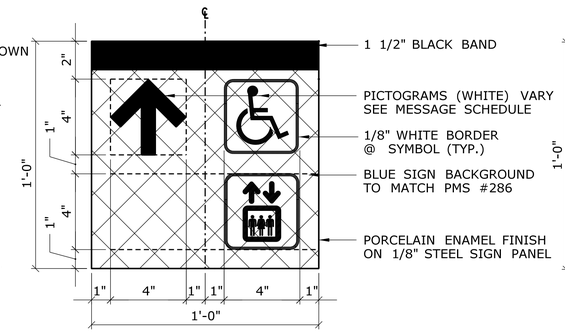

TYPE: DS-2

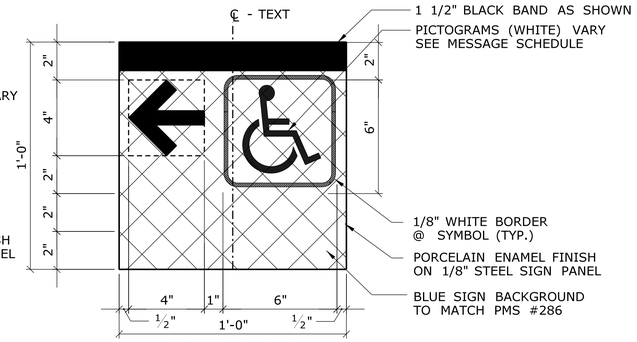

TYPE: DS-3

DIRECTIONAL SIGNS (1 / N-201)

SCALE: 3" = 1'-0"

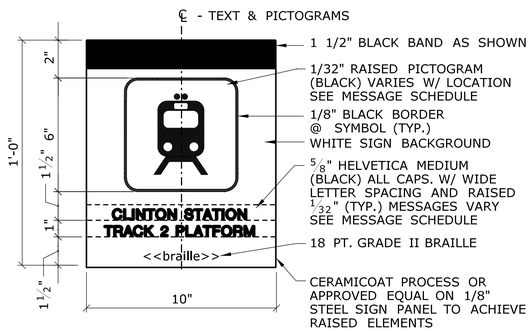

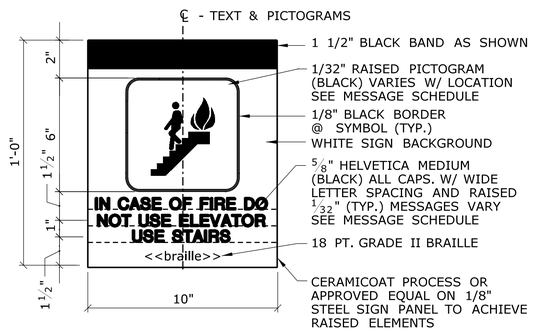

INFORMATION SIGNS: TACTILE / BRAILLE (2 / N-201)

SCALE: 3" = 1'-0"

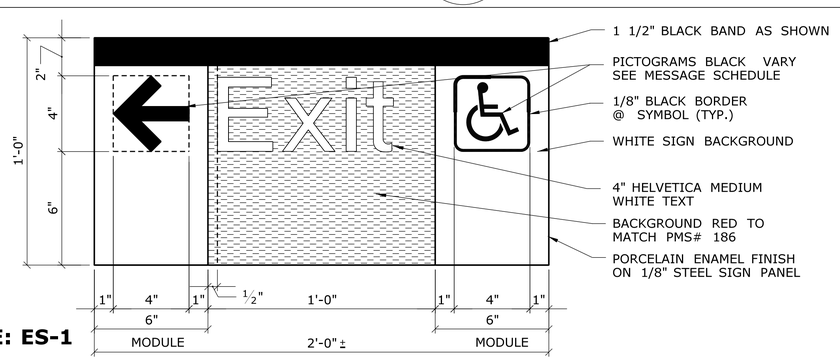

TYPE: ES-1

EXIT SIGNS (3 / N-201)

SCALE: 3" = 1'-0"

NOTE:
ALL SIGN PANELS TO BE FABRICATED WITH MOUNTING HOLES AS REQUIRED PRIOR TO APPLICATION OF PORCELAIN ENAMEL FINISH, SEE ALSO MOUNTING DETAILS

REV.	DATE	REVISION DESCRIPTION	SHEET NO.

Filename: FD_MSH_SGN_0027_0059_N-201.dgn

THE INFORMATION, INCLUDING ESTIMATED QUANTITIES OF WORK, SHOWN ON THESE SHEETS IS BASED ON LIMITED INVESTIGATIONS BY THE STATE AND IS IN NO WAY WARRANTED TO INDICATE THE CONDITIONS OF ACTUAL QUANTITIES OF WORK WHICH WILL BE REQUIRED.

Date Plotted: October 01, 2014

DESIGNER/DRAFTER: PB
CHECKED BY: MAR
SCALE AS NOTED

STATE OF CONNECTICUT
DEPARTMENT OF TRANSPORTATION

ENGINEER: BAKER ENGINEERING
APPROVED BY:
DATE:

PROJECT TITLE:
SHORE LINE EAST RAILROAD STATIONS

TOWN: CLINTON

DRAWING TITLE: SIGN GRAPHICS I

PROJECT NO. 310-0059
DRAWING NO. N-201
SHEET NO. 05.05

SIGN FACE SHEET ALUMINUM TYPE III - SEE CT. D.O.T. STANDARD SHEET X (CURRENT STANDARD MAY VARY FROM ILLUSTRATION)

TYPE: SS-1

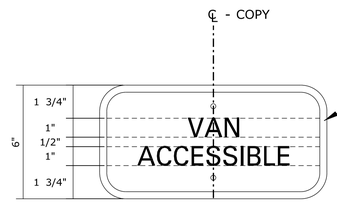

SIGN FACE SHEET ALUMINUM TYPE III - SEE CT. D.O.T. STANDARD SHEET X (CURRENT STANDARD MAY VARY FROM ILLUSTRATION)

TYPE: SS-2

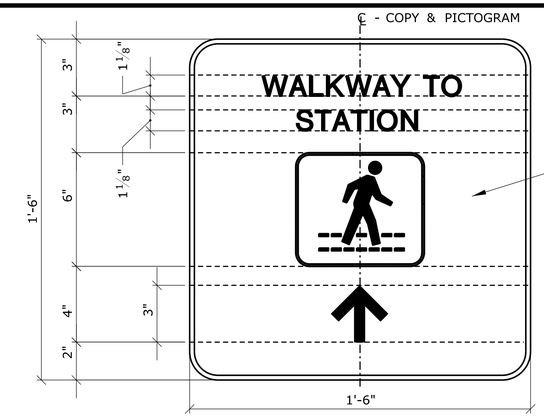

SIGN FACE SHEET ALUMINUM TYPE III - SEE CT. D.O.T. STANDARD SHEET X

NOTE:
MESSAGE VARIES WITH LOCATION SEE SIGN SCHEDULE

TYPE: SS-3

SITE SIGNS: 1 / N-202

SCALE: 3" = 1'-0"

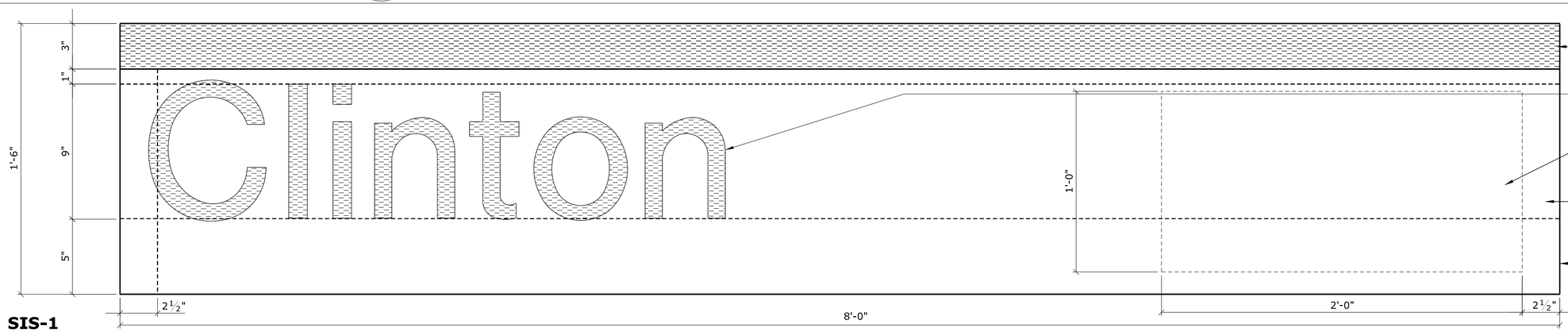

3" RED BAND AS SHOWN COLOR TO MATCH PMS #186

COPY STYLE TO BE HELVETICA MEDIUM, COLOR TO MATCH PMS # 186

LOGO TO BE PROVIDED BY OWNER (CONTRACTOR TO COORDINATE WITH CT DOT PRIOR TO FABRICATION)

WHITE SIGN BACKGROUND

PORCELAIN ENAMEL FINISH ON 1/8" STEEL SIGN PANEL

TYPE: SIS-1

STATION IDENTIFICATION SIGNS: 2 / N-202

SCALE: 1 1/2" = 1'-0"

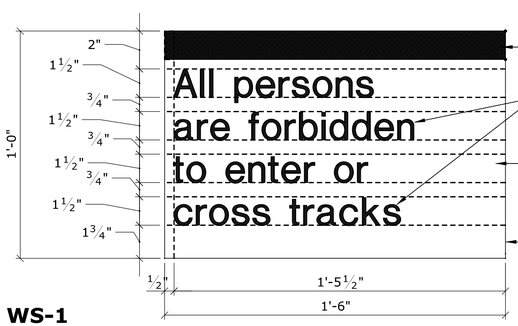

1 1/2" BLACK BAND AS SHOWN

1 1/2" CAP HT. HELVETICA MEDIUM RED TO MATCH PMS# 186

WHITE SIGN BACKGROUND

PORCELAIN ENAMEL FINISH ON 1/8" STEEL SIGN PANEL

TYPE: WS-1

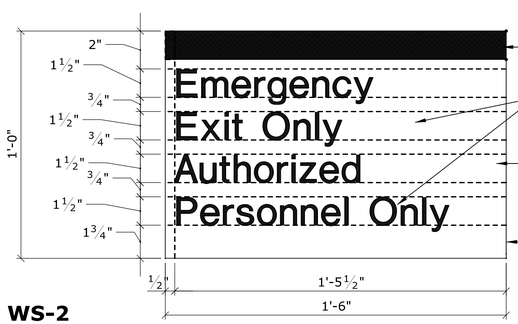

1 1/2" BLACK BAND AS SHOWN

1 1/2" CAP HT. HELVETICA MEDIUM RED TO MATCH PMS# 186

WHITE SIGN BACKGROUND

PORCELAIN ENAMEL FINISH ON 1/8" STEEL SIGN PANEL

TYPE: WS-2

WARNING SIGNS: 3 / N-202

SCALE: 3" = 1'-0"

REV.	DATE	REVISION DESCRIPTION	SHEET NO.

Filename: FD_MSH_SGN_0027_0059_N-202.dgn

THE INFORMATION, INCLUDING ESTIMATED QUANTITIES OF WORK, SHOWN ON THESE SHEETS IS BASED ON LIMITED INVESTIGATIONS BY THE STATE AND IS IN NO WAY WARRANTED TO INDICATE THE CONDITIONS OF ACTUAL QUANTITIES OF WORK WHICH WILL BE REQUIRED.

Date Plotted: October 01, 2014

DESIGNER/DRAFTER: PB

CHECKED BY: MAR

SCALE AS NOTED

STATE OF CONNECTICUT
DEPARTMENT OF TRANSPORTATION

ENGINEER: BAKER ENGINEERING

APPROVED BY:

DATE:

PROJECT TITLE:

SHORE LINE EAST RAILROAD STATIONS

TOWN: CLINTON

DRAWING TITLE: SIGN GRAPHICS II

PROJECT NO. 310-0059

DRAWING NO. N-202

SHEET NO. 05.06

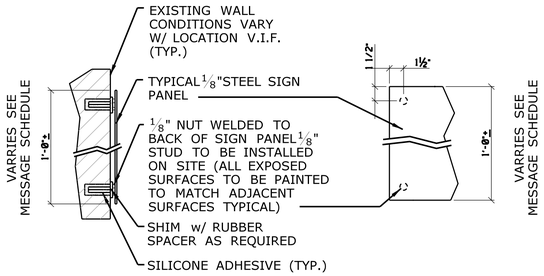

TYPE: A-1

WALL MOUNT 1 / N-501

SCALE: 1 1/2" = 1'-0"

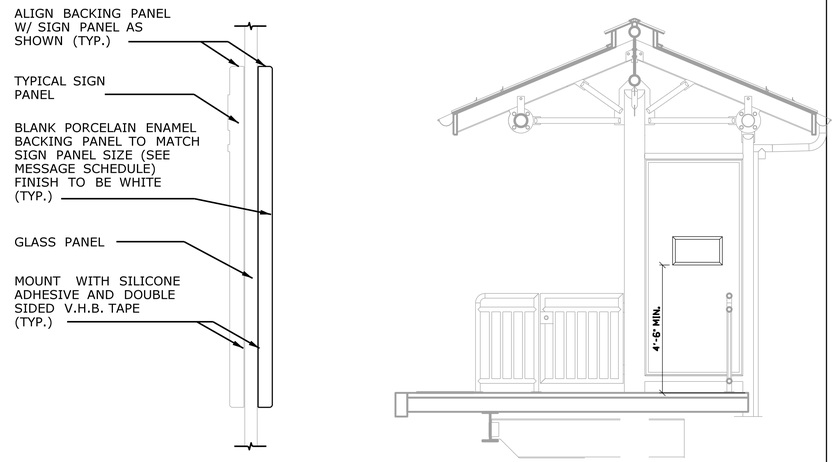

TYPE: C-1

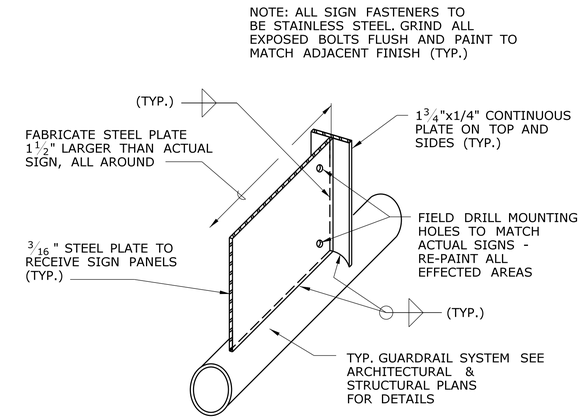

BACKING PANEL 4 / N-501

SCALE: 3/4" = 1'-0"

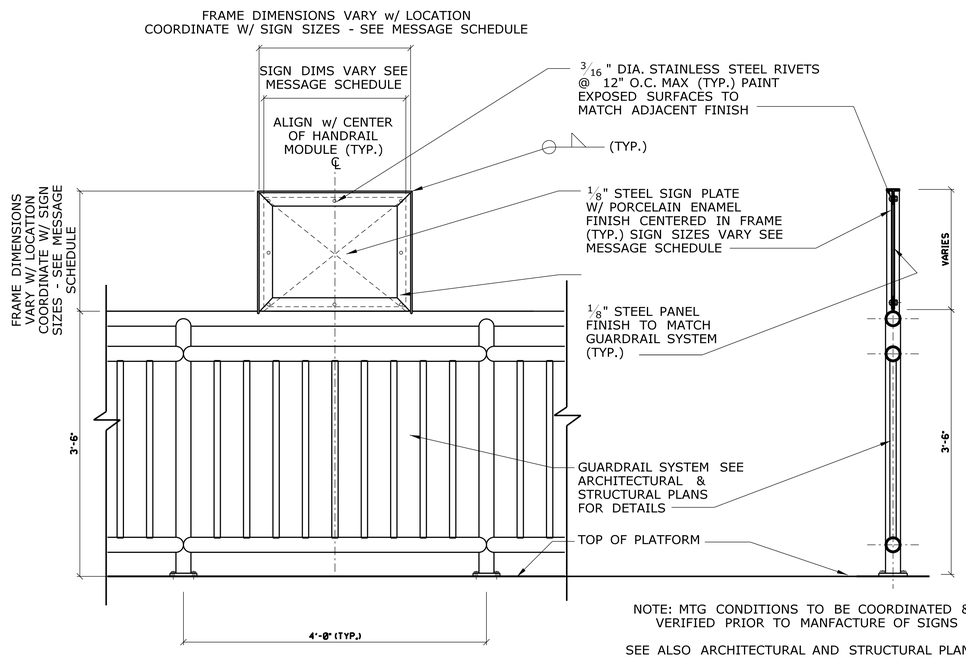

NOTE: MTG CONDITIONS TO BE COORDINATED & VERIFIED PRIOR TO MANFACTURE OF SIGNS

SEE ALSO ARCHITECTURAL AND STRUCTURAL PLANS FOR ADDITIONAL INFORMATION NOT SHOWN HERE

TYPE: D-1

PLATFORM RAILING MOUNT 5 / N-501

SCALE: 1" = 1'-0"

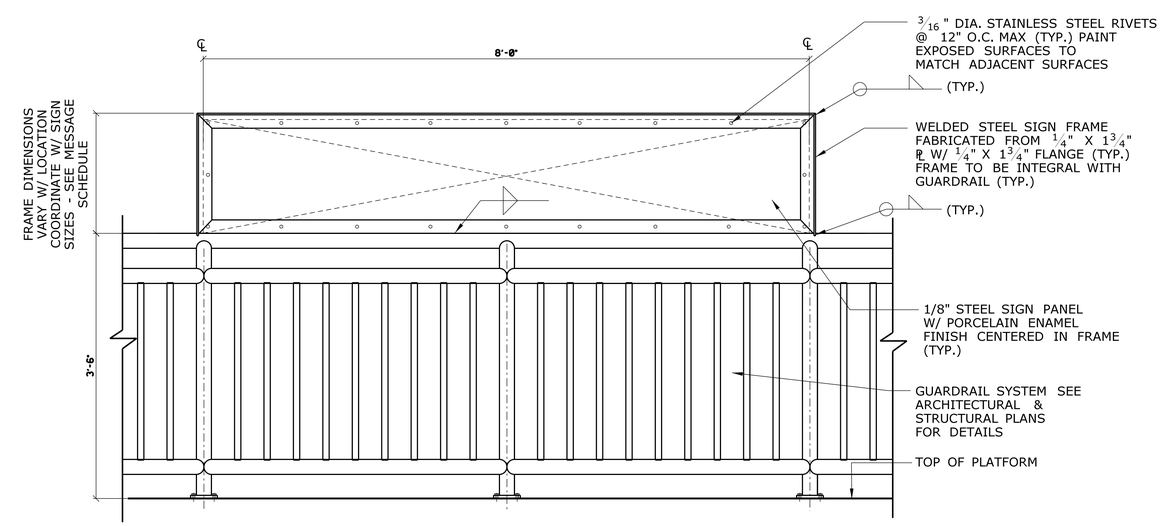

TYPE: D-2

PLATFORM RAILING MOUNT 6 / N-501

SCALE: 1" = 1'-0"

REV.	DATE	REVISION DESCRIPTION	SHEET NO.

Filename: FD_MSH_SGN_0027_0059_N-501.dgn

THE INFORMATION, INCLUDING ESTIMATED QUANTITIES OF WORK, SHOWN ON THESE SHEETS IS BASED ON LIMITED INVESTIGATIONS BY THE STATE AND IS IN NO WAY WARRANTED TO INDICATE THE CONDITIONS OF ACTUAL QUANTITIES OF WORK WHICH WILL BE REQUIRED.

Date Plotted: October 01, 2014

DESIGNER/DRAFTER: PB

CHECKED BY: MAR

SCALE AS NOTED

STATE OF CONNECTICUT
DEPARTMENT OF TRANSPORTATION

ENGINEER: BAKER ENGINEERING

APPROVED BY:

DATE:

STATE OF CONNECTICUT JOHN DEL ESTIMO 34-19073 LICENSED PROFESSIONAL ENGINEER

PROJECT TITLE: **SHORE LINE EAST RAILROAD STATIONS**

TOWN: **CLINTON**

DRAWING TITLE: **SIGN MOUNTING I**

PROJECT NO. **310-0059**

DRAWING NO. **N-501**

SHEET NO. **05.07**

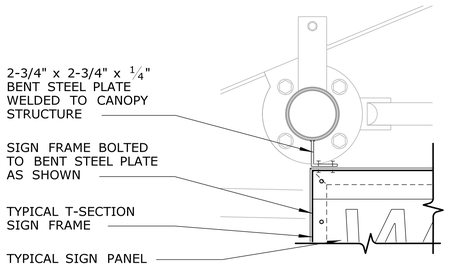

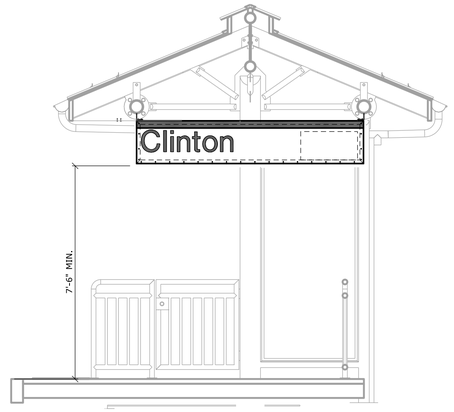

SIGN PERPENDICULAR TO CANOPY STRUCTURE

TYPE: E-1

CANOPY MOUNT 1 / N-502
SCALE: 1½" = 1'-0"

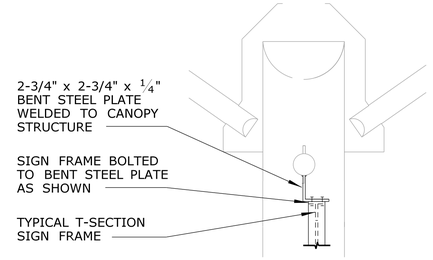

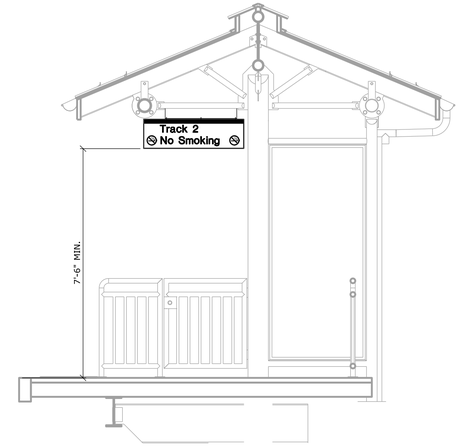

TYPE: E-2

CANOPY MOUNT 3 / N-502
SCALE: ½" = 1'-0"

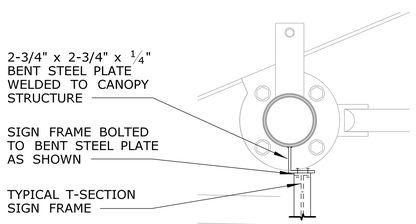

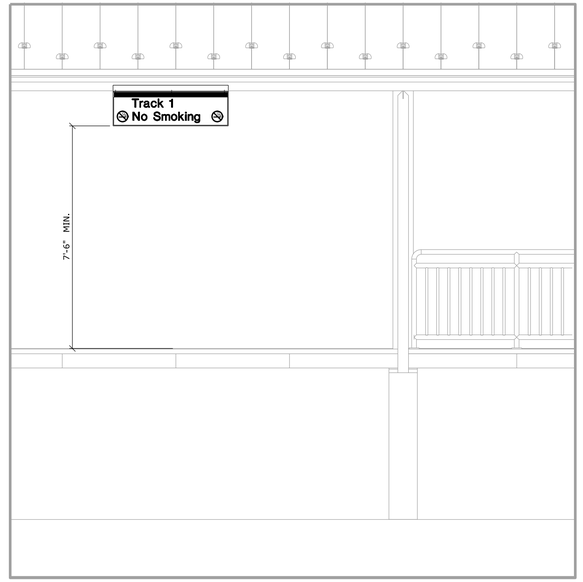

SIGN PARALLEL TO CANOPY STRUCTURE

TYPE: E-3

CANOPY MOUNT 5 / N-502
SCALE: 1" = 1'-0"

REV.	DATE	REVISION DESCRIPTION	SHEET NO.

Filename: FD_MSH_SGN_0027_0059_N-502.dgn

THE INFORMATION, INCLUDING ESTIMATED QUANTITIES OF WORK, SHOWN ON THESE SHEETS IS BASED ON LIMITED INVESTIGATIONS BY THE STATE AND IS IN NO WAY WARRANTED TO INDICATE THE CONDITIONS OF ACTUAL QUANTITIES OF WORK WHICH WILL BE REQUIRED.

Date Plotted: October 01, 2014

DESIGNER/DRAFTER: PB
CHECKED BY: MAR
SCALE AS NOTED

STATE OF CONNECTICUT
DEPARTMENT OF TRANSPORTATION

ENGINEER: BAKER ENGINEERING
APPROVED BY:
DATE:

PROJECT TITLE:
SHORE LINE EAST
RAILROAD STATIONS

TOWN: CLINTON

DRAWING TITLE: SIGN MOUNTING II

PROJECT NO. 310-0059
DRAWING NO. N-502
SHEET NO. 05.08

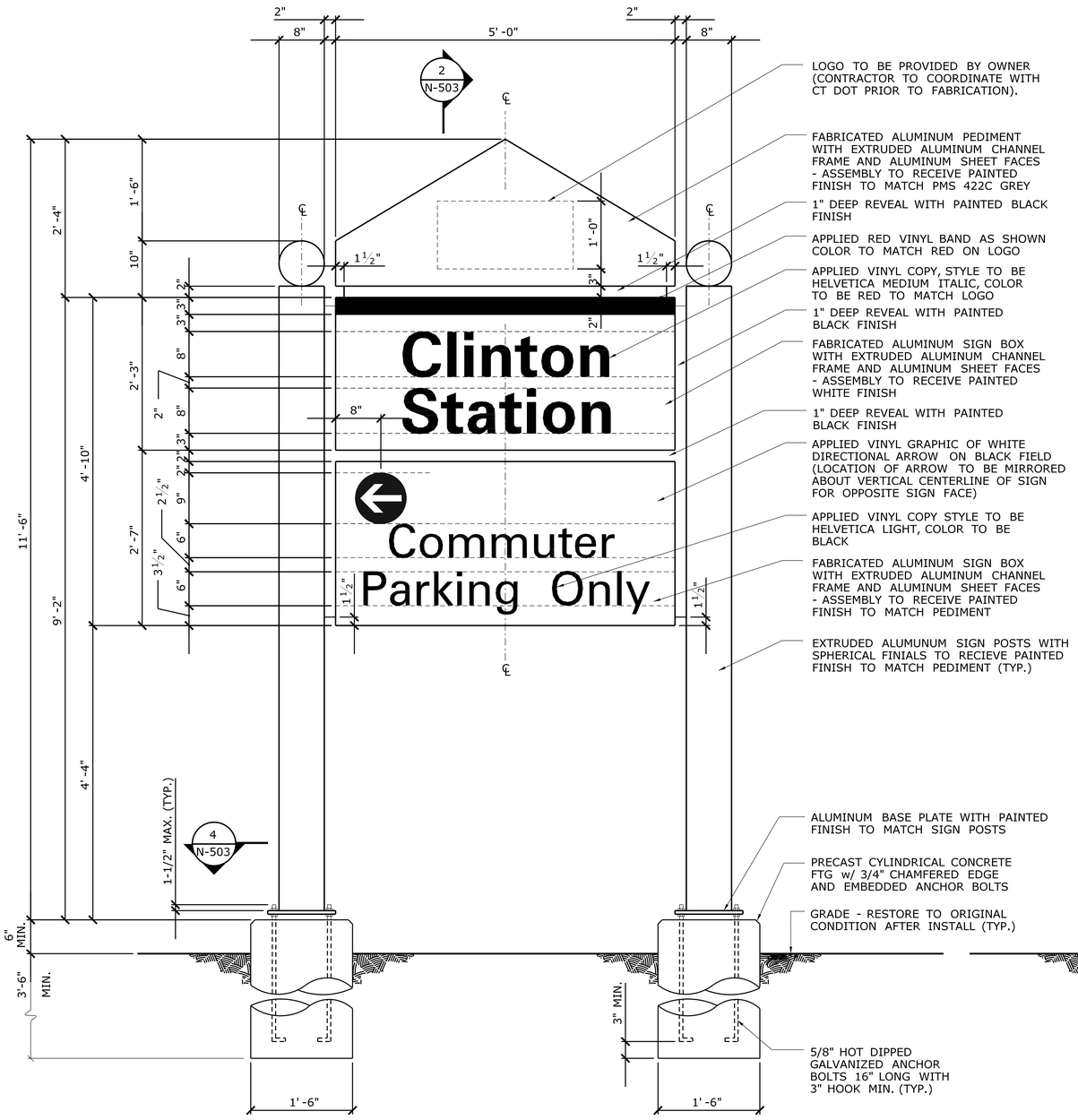

SIGN TYPE "A" - DOUBLE SIDED STATION IDENTIFICATION SIGN — 1 / N-503

SCALE: 1" = 1'-0"

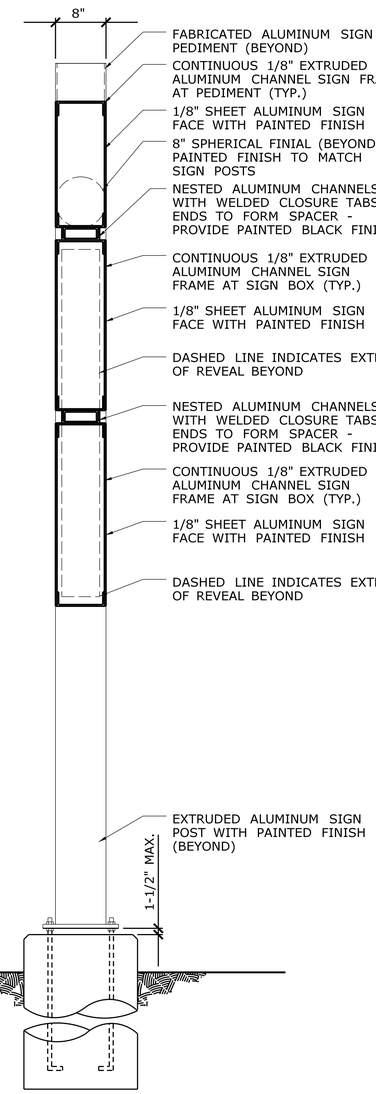

SECTION — 2 / N-503

SCALE: 1-1/2" = 1'-0"

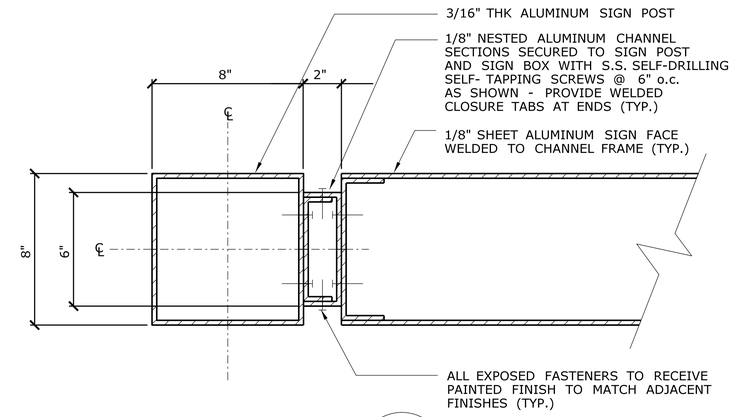

DETAIL AT FRAME — 3 / N-503

SCALE: 1-1/2" = 1'-0"

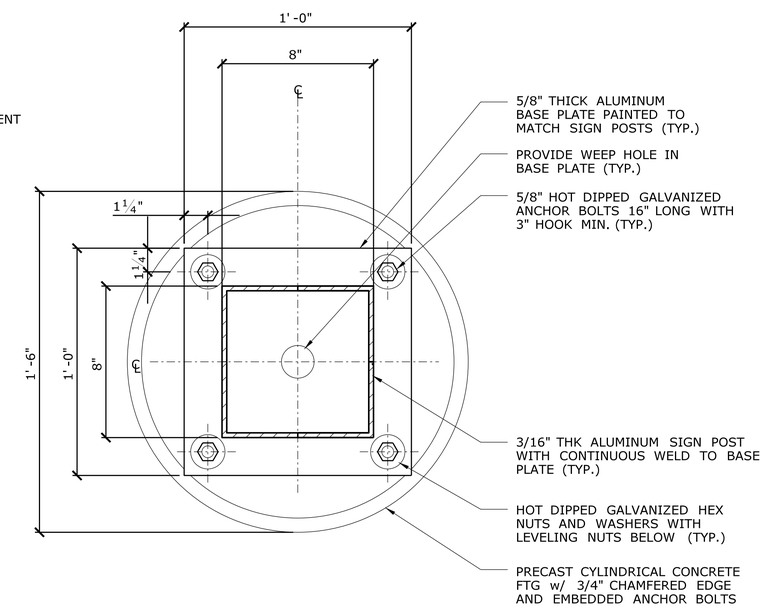

DETAIL AT BASE PLATE — 4 / N-503

SCALE: 1-1/2" = 1'-0"

REV.	DATE	REVISION DESCRIPTION	SHEET NO.

Filename: FD_MSH_SGN_0027_0059_N-503.dgn

THE INFORMATION, INCLUDING ESTIMATED QUANTITIES OF WORK, SHOWN ON THESE SHEETS IS BASED ON LIMITED INVESTIGATIONS BY THE STATE AND IS IN NO WAY WARRANTED TO INDICATE THE CONDITIONS OF ACTUAL QUANTITIES OF WORK WHICH WILL BE REQUIRED.

Date Plotted: October 01, 2014

DESIGNER/DRAFTER: PB

CHECKED BY: MAR

SCALE AS NOTED

STATE OF CONNECTICUT
DEPARTMENT OF TRANSPORTATION

ENGINEER: BAKER ENGINEERING

APPROVED BY: DATE:

PROJECT TITLE: SHORE LINE EAST RAILROAD STATIONS

TOWN: CLINTON

DRAWING TITLE: SIGN TYPE "A"

PROJECT NO. 310-0059

DRAWING NO. N-503

SHEET NO. 05.09

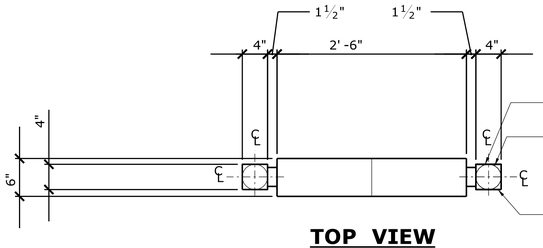

TOP VIEW

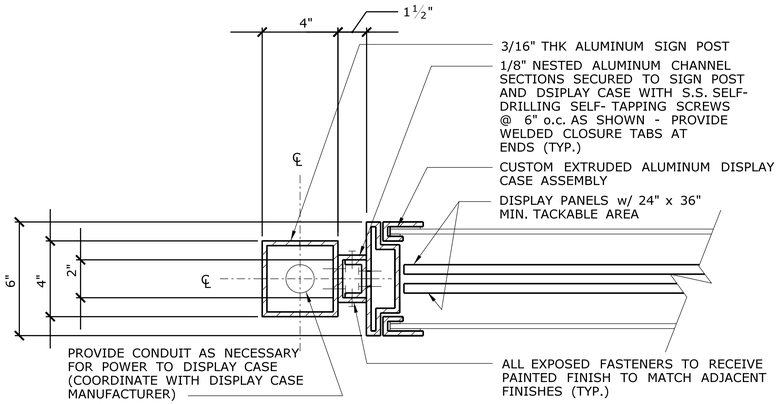

DETAIL AT HEADER PANEL — 3 / N-504

SCALE: 3" = 1'-0"

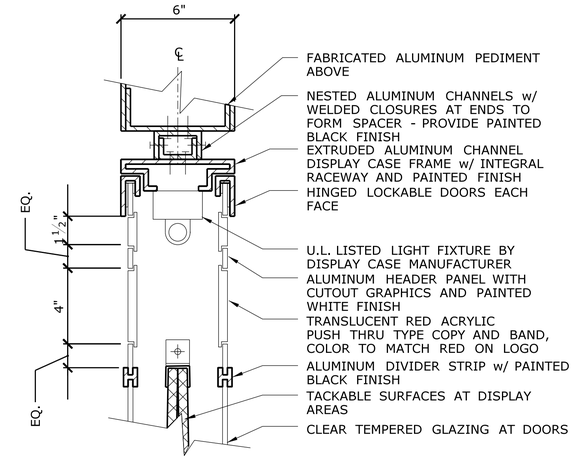

DETAIL AT FRAME ASSEMBLY — 4 / N-504

SCALE: 3" = 1'-0"

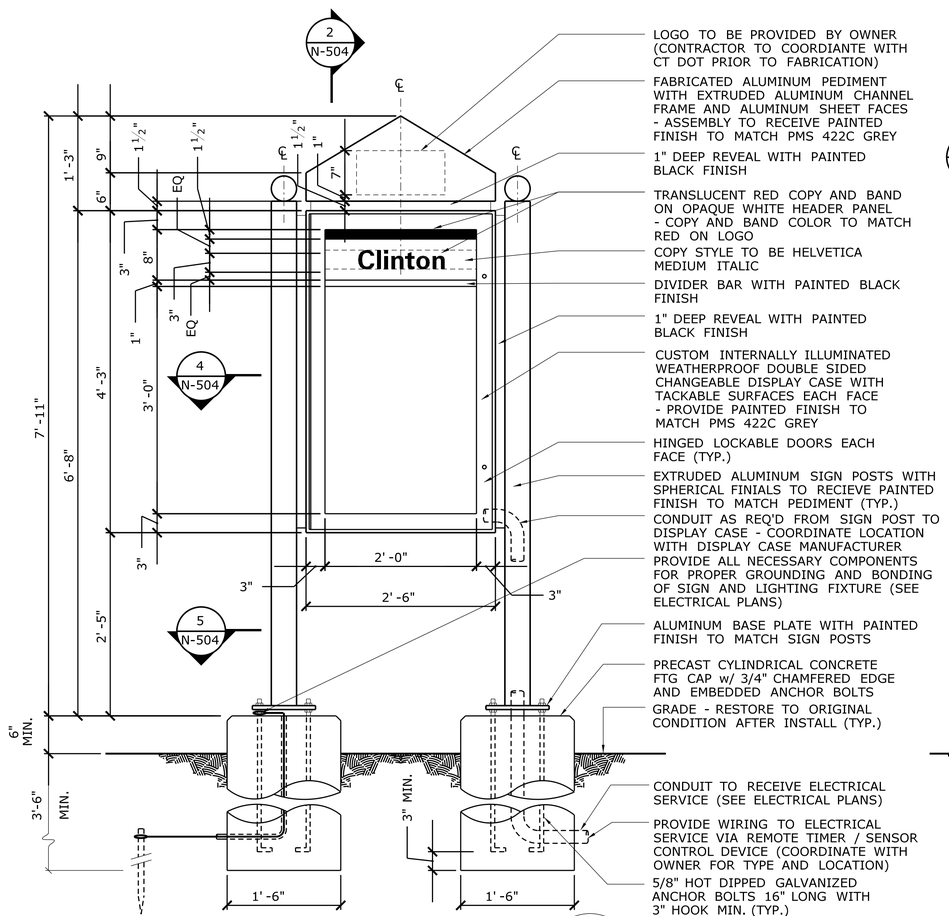

SIGN TYPE "B" DOUBLE SIDED KIOSK — 1 / N-504

SCALE: 3" = 1'-0"

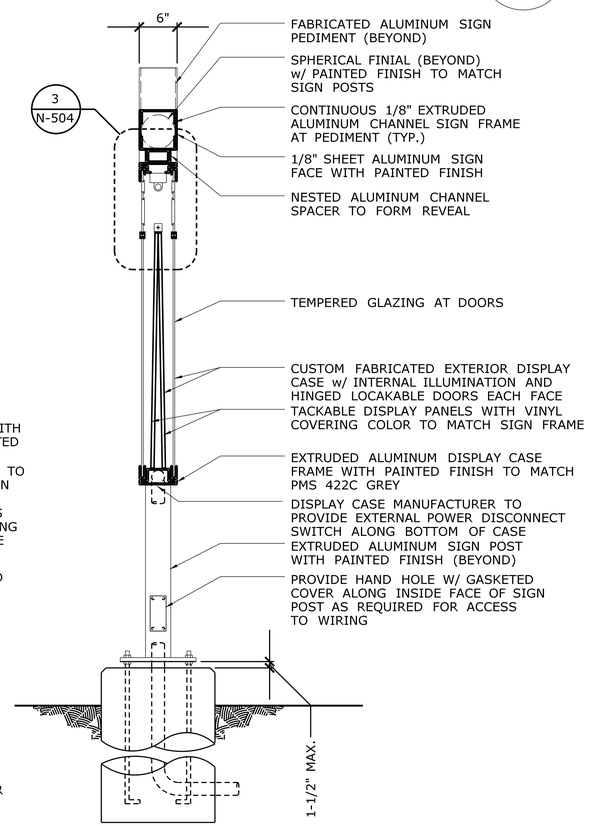

SECTION — 2 / N-504

SCALE: 3" = 1'-0"

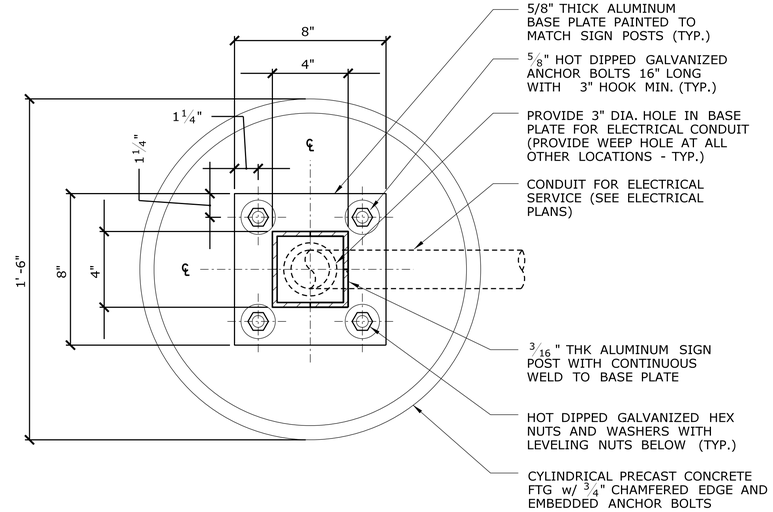

DETAIL AT BASE PLATE — 5 / N-504

SCALE: 3" = 1'-0"

REV.	DATE	REVISION DESCRIPTION	SHEET NO.

Filename: FD_MSH_SGN_0027_0059_N-504.dgn

THE INFORMATION, INCLUDING ESTIMATED QUANTITIES OF WORK, SHOWN ON THESE SHEETS IS BASED ON LIMITED INVESTIGATIONS BY THE STATE AND IS IN NO WAY WARRANTED TO INDICATE THE CONDITIONS OF ACTUAL QUANTITIES OF WORK WHICH WILL BE REQUIRED.

Date Plotted: October 01, 2014

DESIGNER/DRAFTER: PB

CHECKED BY: MAR

SCALE AS NOTED

STATE OF CONNECTICUT
DEPARTMENT OF TRANSPORTATION

ENGINEER: BAKER ENGINEERING

APPROVED BY: DATE:

PROJECT TITLE: **SHORE LINE EAST RAILROAD STATIONS**

TOWN: **CLINTON**

DRAWING TITLE: **SIGN TYPE "B"**

PROJECT NO. **310-0059**

DRAWING NO. **N-504**

SHEET NO. **05.10**

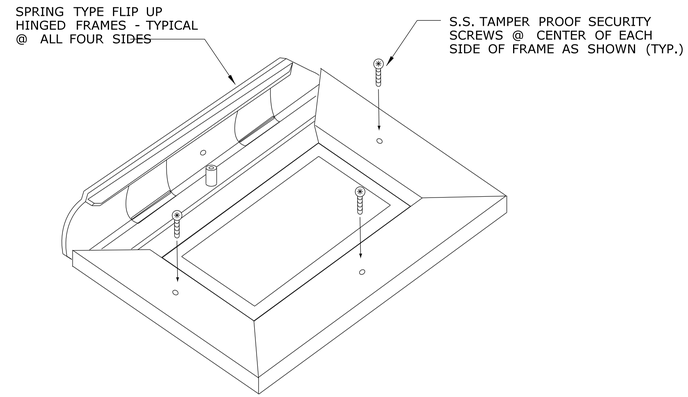

ISOMETRIC VIEW - NOT TO SCALE

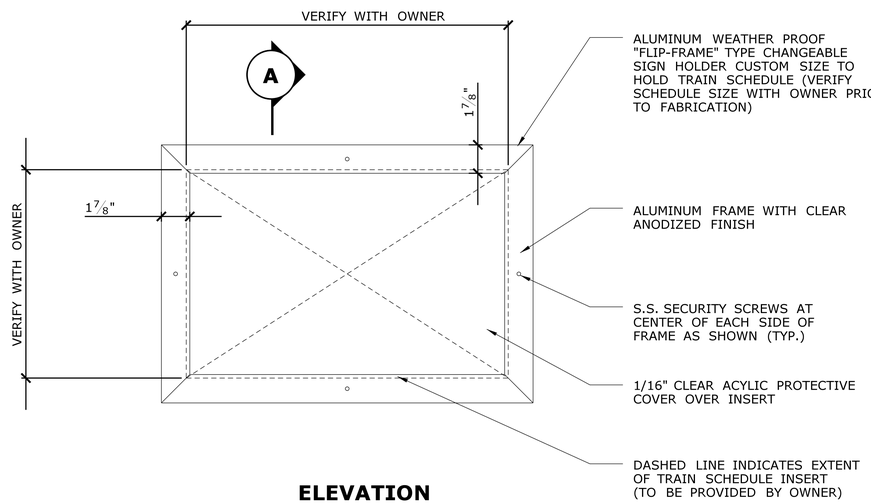

ELEVATION

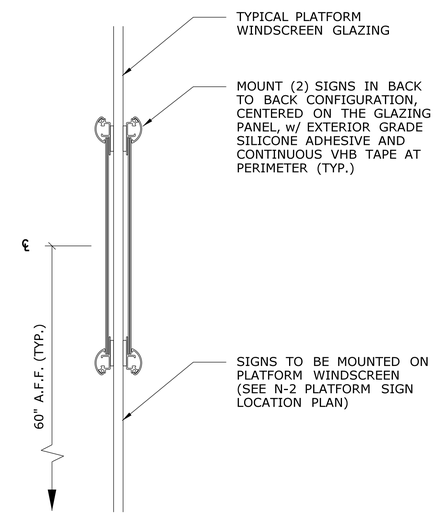

SECTION "A"

SIGN TYPE "C" - CHANGEABLE SCHEDULE HOLDER

SCALE: N.T.S

1
N-505

REV.	DATE	REVISION DESCRIPTION	SHEET NO.

Filename: FD_MSH_SGN_0027_0059_N-505.dgn

THE INFORMATION, INCLUDING ESTIMATED QUANTITIES OF WORK, SHOWN ON THESE SHEETS IS BASED ON LIMITED INVESTIGATIONS BY THE STATE AND IS IN NO WAY WARRANTED TO INDICATE THE CONDITIONS OF ACTUAL QUANTITIES OF WORK WHICH WILL BE REQUIRED.

Date Plotted: October 01, 2014

DESIGNER/DRAFTER: PB
CHECKED BY: MAR
SCALE AS NOTED

STATE OF CONNECTICUT
DEPARTMENT OF TRANSPORTATION

ENGINEER: BAKER ENGINEERING
APPROVED BY:
DATE:

PROJECT TITLE:
SHORE LINE EAST
RAILROAD STATIONS

TOWN: CLINTON

DRAWING TITLE: SIGN TYPE "C"

PROJECT NO. 310-0059
DRAWING NO. N-505
SHEET NO. 05.11

S I G N S C H E D U L E

SIGN NO.	SIGN GRAPHICS	MOUNTING DETAIL	SIZE H x L	MOUNTING TYPE	MOUNTING HEIGHT (A.F.F. to BOTTOM)	MESSAGE AND/OR SYMBOL	REMARKS
100	WS-1 / N-202	D-1 / N-501	1'-0" x 1'-6"	PLATFORM RAILING MOUNT	3'-6"	All persons are forbidden to enter or cross tracks	
101	WS-2 / N-202	D-1 / N-501	1'-0" x 1'-6"	PLATFORM RAILING MOUNT	3'-6"	Emergency Exit Only Authorized Personnel Only	
102	SIS-1 / N-202	D-2 / N-501	1'-6" x 8'-0"	PLATFORM RAILING MOUNT	3'-6"	Clinton	
103	ES-1 / N-201	D-1 / N-501	1'-0" x 2'-0"	PLATFORM RAILING MOUNT	3'-9"	Exit	
104-105	SIS-1 / N-202	D-2 / N-501	1'-6" x 8'-0"	PLATFORM RAILING MOUNT	3'-6"	Clinton	
106	SIS-1 / N-201	E-1 / N-502	1'-6" x 8'-0"	CANOPY MOUNT	7'-6" MIN.	Clinton	
107-108	1 / N-505	-	SEE N-505	SEE N-505	SEE N-505		TYPE "C" CHANGEABLE SCHEDULE HOLDER SIGN
109	SIS-1 / N-202	D-2 / N-501	1'-6" x 8'-0"	PLATFORM RAILING MOUNT	3'-6"	Clinton	
110-113	DS-1 / N-201	E-3 / N-502	1'-0" x 3'-0"	CANOPY MOUNT	7'-6" MIN.	Track 1 No Smoking	
114	IS-1 / N-201	D-1 / N-501	1'-0" x 0'-10"	PLATFORM RAILING MOUNT	4'-6"	CLINTON STATION TRACK 1 PLATFORM	
115	ES-1 / N-201	D-1 / N-501	1'-0" x 2'-0"	PLATFORM RAILING MOUNT	3'-9"	Exit	
116	DS-2 / N-201	A-1 / N-501	1'-0" x 1'-0"	WALL MOUNT	4'-6"		
117	IS-1 / N-201	A-1 / N-501	1'-0" x 10"	WALL MOUNT	4'-6"	STAIR HEIGHT	
118	DS-2 / N-201	A-1 / N-501	1'-0" x 1'-0"	WALL MOUNT	4'-6"		
119	DS-1 / N-201	A-1 / N-501	1'-0" x 4'-0"	WALL MTD ABOVE DOOR	7'-4"+-	To Track 1 To Track 2	
120	IS-1 / N-201	A-1 / N-501	1'-0" x 0'-10"	WALL MOUNT	4'-6"	1 LEVEL 1 HEIGHT	
121	DS-3 / N-201	A-1 / N-501	1'-0" x 1'-0"	WALL MOUNT	4'-6"		
122	IS-1 / N-201	A-1 / N-501	1'-0" x 10"	WALL MOUNT	4'-6"	STAIR HEIGHT	
123	WS-1 / N-202	D-1 / N-501	1'-0" x 1'-6"	PLATFORM RAILING MOUNT	3'-6"	All persons are forbidden to enter or cross tracks	
124	SIS-1 / N-202	E-1 / N-502	1'-6" x 8'-0"	CANOPY MOUNT	7'-6" MIN.	Clinton	
125-126	1 / N-503	-	SEE N-503	SEE N-503	SEE N-503		TYPE "A" POST AND PANEL STATION ID SIGN
127-128	1 / N-504	-	SEE N-504	SEE N-504	SEE N-504		TYPE "B" POST AND PANEL KIOSK SIGN
129-130	D.O.T. STANDARD SHEET X	D.O.T. STANDARD SHEET TR-1208..02	1'-6" x 1'-6"	CT D.O.T. STREET POST	D.O.T. STANDARD SHEET TR-1208..01	KNOCK LOUDER PLEASE! HEAR BUSINESS WITH DEAF EYES WILLFORD HALL 48 HIGH WALL	
131-132	D.O.T. STANDARD SHEET X	D.O.T. STANDARD SHEET TR-1208..02	1'-0" x 0'-8"	CT D.O.T. STREET POST	D.O.T. STANDARD SHEET TR-1208..01	JOAN ARCHECHOLX	SIGN FACE SHEET ALUMINUM TYPE III REFLECTIVE SHEETING
133	SS-3 / N-202	D.O.T. STANDARD SHEET TR-1208..02	1'-6" x 1'-6"	CT D.O.T. STREET POST	D.O.T. STANDARD SHEET TR-1208..01	Walkway To Station	SIGN FACE SHEET ALUMINUM TYPE III REFLECTIVE SHEETING
134	DS-3 / N-201	D.O.T. STANDARD SHEET TR-1208..02	1'-0" x 1'-0"	CT D.O.T. STREET POST	4'-6"		
135	SS-3 / N-202	D.O.T. STANDARD SHEET TR-1208..02	1'-6" x 1'-6"	CT D.O.T. STREET POST	D.O.T. STANDARD SHEET TR-1208..01	Walkway To Street	SIGN FACE SHEET ALUMINUM TYPE III REFLECTIVE SHEETING
136-137	D.O.T. STANDARD REGULATORY SIGN	D.O.T. STANDARD SHEET TR-1208..02	1'-6" x 1'-0"	CT D.O.T. STREET POST	D.O.T. STANDARD SHEET TR-1208..01	PICKUP AND DROP-OFF ZONE 5 MIN.	#136 = SIGN #31-0665(L) #137 = SIGN #31-0665(R)	SIGN FACE SHEET ALUMINUM TYPE III REFLECTIVE SHEETING
138	D.O.T. STANDARD SHEET Z	D.O.T. STANDARD SHEET TR-1208..02	1'-6" x 3'-0"	CT D.O.T. STREET POST	D.O.T. STANDARD SHEET TR-1208..01	PARK AT YOUR OWN RISK REMOVE KEYS AND LOCK CAR NOT RESPONSIBLE FOR LOST OR STOLEN PROPERTY	SIGN FACE SHEET ALUMINUM TYPE III REFLECTIVE SHEETING
139	D.O.T. STANDARD SHEET X	D.O.T. STANDARD SHEET TR-1208..02	2'-6" x 2'-6"	CT D.O.T. STREET POST	D.O.T. STANDARD SHEET TR-1208..01	STOP	= SIGN #31-0553	SIGN FACE SHEET ALUMINUM BRIGHT WIDE ANGLE RETROREFLECTIVE SHEETING R1-1 STOP SIGN
140	DS-1 / N-201	A-1 / N-501	1'-0" x 4'-0"	WALL MTD ABOVE DOOR	7'-4"+-	To Track 2 To Track 1	
141-142	DS-2 / N-201	A-1 / N-501	1'-0" x 1'-0"	WALL MOUNT	4'-6"		
143	DS-1 / N-201	A-1 / N-501	1'-0" x 4'-0"	WALL MTD ABOVE DOOR	7'-4"+-	To Track 2 To Track 1	
144-145	IS-1 / N-201	A-1 / N-501	1'-0" x 10"	WALL MOUNT	4'-6"	AREA OF REFUGE HEIGHT	
146-147	IS-1 / N-201	A-1 / N-501	1'-0" x 10"	WALL MOUNT	4'-6"	2 LEVEL 2 HEIGHT	
148-149	IS-1 / N-201	A-1 / N-501	1'-0" x 10"	WALL MOUNT	4'-6"	IN CASE OF FIRE DO NOT USE ELEVATOR STAIRS HEIGHT	
150-151	IS-1 / N-201	A-1 / N-501	1'-0" x 10"	WALL MOUNT	4'-6"	STAIR HEIGHT	
152-153	DS-3 / N-201	A-1 / N-501	1'-0" x 1'-0"	WALL MOUNT	4'-6"		
154	DS-1 / N-201	A-1 / N-501	1'-0" x 3'-0"	WALL MOUNT ABOVE DOORS	7'-6" MIN.	To Track 2 No Smoking	
155	DS-1 / N-201	A-1 / N-501	1'-0" x 3'-0"	WALL MOUNT ABOVE DOORS	7'-6" MIN.	To Track 1 No Smoking	
156	D.O.T. STANDARD SHEET Z	D.O.T. STANDARD SHEET TR-1208..02	2'-6" x 5'-0"	CT D.O.T. STREET POST	D.O.T. STANDARD SHEET TR-1208..01	NOTICE THIS PARKING AREA PATROLLED	

NOTE:
ALL SIGN PANELS TO BE FABRICATED WITH MOUNTING HOLES AS REQUIRED PRIOR TO APPLICATION OF PORCELAIN ENAMEL FINISH, SEE ALSO MOUNTING DETAILS

REV.	DATE	REVISION DESCRIPTION	SHEET NO.

Filename: FD_MSH_SGN_0027_0059_N-601.dgn

THE INFORMATION, INCLUDING ESTIMATED QUANTITIES OF WORK, SHOWN ON THESE SHEETS IS BASED ON LIMITED INVESTIGATIONS BY THE STATE AND IS IN NO WAY WARRANTED TO INDICATE THE CONDITIONS OF ACTUAL QUANTITIES OF WORK WHICH WILL BE REQUIRED.

Date Plotted: October 01, 2014

DESIGNER/DRAFTER: PB
CHECKED BY: MAR
SCALE AS NOTED

STATE OF CONNECTICUT
DEPARTMENT OF TRANSPORTATION

ENGINEER: BAKER ENGINEERING
APPROVED BY:
DATE:

PROJECT TITLE: SHORE LINE EAST RAILROAD STATIONS

TOWN: CLINTON

DRAWING TITLE: SIGN SCHEDULE I

PROJECT NO. 310-0059
DRAWING NO. N-601
SHEET NO. 05.12

06 - STRUCTURAL

INDEX OF DRAWINGS

DRAWING NUMBER	DRAWING TITLE
STI-001	DRAWING INDEX
S-001	GENERAL NOTES - 1
S-002	GENERAL NOTES - 2
S-100	FOUNDATION PLAN
S-101	NORTH STATION FOUNDATION PLAN
S-102	SOUTH TOWER FOUNDATION PLAN
S-103	PLATFORM FRAMING PLAN
S-104	CANOPY FRAMING PLAN
S-105	NORTH & SOUTH TOWER FRAME ELEVATIONS
S-106	TOWER FRAMING PLANS
S-107	STAIR TOWER ISOMETRIC DIAGRAM
S-201	NEW PLATFORM SECTIONS & DETAILS
S-202	PLATFORM SECTIONS & DETAILS
S-203	P/C CONCRETE PLATFORM SECTIONS & DETAILS
S-204	TOWER - TYPICAL FOUNDATION DETAILS
S-205	NORTH TOWER FOUNDATION SECTIONS
S-206	NORTH TOWER FOUNDATION SECTIONS
S-207	NORTH TOWER FOUNDATION SECTIONS
S-208	PLATFORM STAIRS DETAILS
S-209	SITE STAIR DETAILS
S-210	EXCAVATION DETAILS
S-301	CANOPY SECTION & DETAIL
S-302	CANOPY FRAMING DETAILS - 1
S-303	CANOPY FRAMING DETAILS - 2
S-401	PLATFORM FOLD UP EDGE DETAILS - 1
S-402	PLATFORM FOLD UP EDGE DETAILS - 2
S-403	PLATFORM FOLD UP EDGE DETAILS - 3
S-501	TOWER SUPERSTRUCTURE SECTIONS & DETAILS - 1
S-502	TOWER SUPERSTRUCTURE SECTIONS & DETAILS - 2
S-503	TOWER SUPERSTRUCTURE SECTIONS & DETAILS - 3
S-504	TOWER SUPERSTRUCTURE SECTIONS & DETAILS - 4
S-505	TOWER SUPERSTRUCTURE SECTIONS & DETAILS - 5
S-506	TOWER STRUCTURE RAMP CANOPY SECTIONS
S-601	PEDESTRIAN BRIDGE PLANS, ELEVATION, AND SECTION
S-602	BRIDGE DETAILS - 1
S-603	BRIDGE DETAILS - 2
S-604	BRIDGE DETAILS - 3
S-701	CONSTRUCTION SEQUENCE - 1
S-702	CONSTRUCTION SEQUENCE - 2
S-800	RETAINING WALL PROFILE
S-801	RETAINING WALL DETAILS

DESIGNED BY:

Baker

MICHAEL BAKER ENGINEERING, INC.
500 ENTERPRISE DRIVE
SUITE 2B
ROCKY HILL, CT 06067

REV.	DATE	REVISION DESCRIPTION	SHEET NO.
-	-	-	-
-	-	-	-
-	-	-	-
-	-	-	-
-	-	-	-
-	-	-	-

THE INFORMATION, INCLUDING ESTIMATED QUANTITIES OF WORK, SHOWN ON THESE SHEETS IS BASED ON LIMITED INVESTIGATIONS BY THE STATE AND IS IN NO WAY WARRANTED TO INDICATE THE CONDITIONS OF ACTUAL QUANTITIES OF WORK WHICH WILL BE REQUIRED.

Plotted Date: $DATE$

DESIGNER/DRAFTER: ALD

CHECKED BY: D.BAIC

STATE OF CONNECTICUT
DEPARTMENT OF TRANSPORTATION

Filename: $FILEA$

SIGNATURE/BLOCK:

Baker
Michael Baker Engineering Inc.
500 Enterprise Drive
Suite 2B
Rocky Hill, CT 06067

PROJECT TITLE: SHORELINE EAST RAILROAD STATIONS

TOWN: CLINTON

DRAWING TITLE: RAILROAD STATIONS

PROJECT NO. 310-0059

DRAWING NO. STI-001

SHEET NO. 06.01

Connecticut Department of Transportation
QA/QC Format Check

Border Version: 11/14/08

DESIGN CRITERIA

DC-1 BUILDING CODES AND SPECIFICATIONS:

A. CONNECTICUT STATE BUILDING CODE, 2005
B. INTERNATIONAL CODE COUNCIL (ICC), 2003 INTERNATIONAL BUILDING CODE
C. AMERICAN SOCIETY OF CIVIL ENGINEERS (ASCE), MINIMUM DESIGN LOADS FOR BUILDINGS AND OTHER STRUCTURES, ASCE 7-02
D. STATE OF CONNECTICUT DEPT. OF TRANSPORTATION, STANDARD SPECIFICATIONS FOR ROADS, BRIDGES AND INCIDENTAL CONSTRUCTION, FORM 816, 2004
E. AMTRAK STANDARD TRACK PLAN FOR MINIMUM ROADWAY CLEARANCE, AM 70050-G
F. AMERICAN INSTITUTE OF STEEL CONSTRUCTION(AISC), ALLOWABLE STEEL DESIGN, THIRTEENTH EDITION
G. AMERCIAN CONCRETE INSTITUTE (ACI), BUILDING CODE REQUIREMENTS FOR STRUCTURAL CONCRETE, ACI 318-02
H. AMERCIAN INSTITUTE OF TIMBER CONSTRUCTION, AITC, "TIMBER CONSTRUCTION MANUAL" (LATEST EDITION), INCLUDING "CODE OF STANDARD PRACTICE, AITC 106"
I. NATIONAL FOREST PRODUCTS ASSOCIATION, NFPA, "NATIONAL DESIGN SPECIFICATIONS FOR WOOD CONSTRUCTION" (LATEST EDITION).

DC-2 DESIGN LOADS CRITERIA:

A. LIVE LOADS
1. ROOF — 20 PSF MINIMUM
2. LANDINGS & PLATFORM — 100 PSF
B. SNOW LOADS
1. GROUND SNOW LOAD (Pg) — 30 PSF
2. ROOF SNOW LOAD(Pf) — 30 PSF (CONNECTICUT MIN.)
3. SNOW IMPORTANCE FACTOR (Is) — 1.0
4. SNOW EXPOSURE FACTOR (Ce) — 0.9
C. CONSTRUCTION LOADS (NOT TO EXCEED DESIGN LIVE LOADS)
D. WIND DESIGN CRITERIA
1. BASIC WIND SPEED FOR 3 SEC GUSTS(V) — 115 MPH
2. WIND IMPORTANCE FACTOR (Iw) — 1.0
3. EXPOSURE CATEGORY — C
4. COMPONENTS AND CLADDING, EFFECTIVE WIND AREA PRESSURE
5. DESIGN WIND FORCE FOR OPEN STRUCTURE (IE., CANOPY) APPLIED NORMAL TO PLANE OF ROOFLINE (F): 2.4 KIPS

ZONE	10 SQ.FT.	100 SQ.FT.	500 SQ.FT.
ROOF - ALL POSITIVE	32.5 PSF	26.3 PSF	-
ROOF - NEGATIVE ZONE 1	44.8 PSF	41.8 PSF	-
ROOF - NEGATIVE ZONE 2	69.6 PSF	54.1 PSF	-
ROOF - NEGATIVE ZONE 3	97.4 PSF	78.9 PSF	-

* WIDTH OF WIND PRESSURE ZONES PARALLEL TO ROOF EDGE (a)=4.8FT
**INTERPOLATION BETWEEN EFFECTIVE WIND AREAS IS ACCEPTABLE

E. SEISMIC DESIGN CRITERIA
1. SEISMIC IMPORTANCE FACTOR (Ie) — 1.0
2. SITE CLASS — D
3. MAPPED SPECTRAL RESPONSE ACCELATION, SHORT PERIOD (Ss) — 0.263
4. MAPPED SPECTRAL RESPONSE ACCELATION AT 1 SECOND (S1) — 0.079
5. SPECTRAL RESPONSE COEFFICIENT AT SHORT PERIOD (Sds) — 0.279
6. SPECTRAL RESPONSE COEFFICIENT AT 1 SECOND (Sd1) — 0.126
7. SEISMIC DESIGN CATEGORY — B
8. BASIC SEISMIC FORCE RESISTING SYSTEM - STEEL SYSTEM NOT SPECIFICALLY DETAILED FOR SEISMIC RESISTANCE
9. DESIGN BASE SHEAR — 16 KIPS
10. SEISMIC RESPONSE COEFFICIENT (Cs) — 0.076
11. RESPONSE MODIFICATION FACTOR (R) — 3
12. ANAYLSIS PROCEDURE USED IS EQUIVALENT LATERAL FORCE PROCEDURE
F. FLOOD LOAD - NOT APPLICABLE

DC-3 FOUNDATION DESIGN CRITERIA:

A. FOUNDATION DESIGN IS BASED UPON THE FOLLOWING SOIL PARAMETERS:
1. NET ALLOWABLE SOIL BEARING PRESSURE:
A. SPREAD OR CONTINUOUS FOOTINGS — 4000 PSF
B. LATERAL EARTH PRESSURE PARAMETERS:
1. SOIL DENSITY — 125 PCF
2. COEFFICIENT OF ACTIVE PRESSURE (Ka) — 0.33
3. COEFFICIENT OF AT-REST PRESSURE (Ko) — 0.50
4. COEFFICIENT OF PASSIVE EARTH PRESSURE (Kp) — 3.00
5. ANGLE OF INTERNAL FRICTION (phi) — 30 DEGREES
6. COEFFICIENT OF FRICTION — 0.5
7. MODULUS OF SUB-GRADE REACTION (ks) — 144 PCI
C.FROST DEPTH — 42" (CONNECTICUT MIN.)

DC-4 MATERIALS:

THE FOLLOWING ASTM DESIGN STANDARDS AND STRESSES SHALL BE THE APPROPRIATE MATERIALS USED FOR THIS PROJECT:

A. CEMENT: ASTM C150 TYPE I OR III
ASTM C150 TYPE II (CONCRETE IN CONTACT WITH EARTH)
B. CONCRETE - MINIMUM COMPRESSIVE STRENGTH (Fc') AT 28 DAYS FOR NORMAL WEIGHT CONCRETE, UON:
1. FOOTINGS, WALLS, PIERS & SLABS — 4000 PSI
C. NON-SHRINK LEVELING GROUT ASTM C1107, Fc'= 5000 PSI AT 28 DAYS
D. REINFORCEMENT:
1. DEFORMED BARS — ASTM A615, GRADE 60
2. WELDED WIRE FABRIC — ASTM A185
3. EPOXY COATED BARS — ASTM A775
E. STEEL:
1. STRUCTURAL STEEL WIDE FLANGE & T-SECTIONS — ASTM A992
2. STRUCTURAL ANGLES, CHANNELS AND PLATES — ASTM A36
3. HOLLOW STRUCTURAL SECTIONS — ASTM A500, GRADE B
4. HIGH STRENGTH BOLTS — ASTM A325-N OR -TC
5. ANCHOR RODS — ASTM F1554, GRADE 36
6. HEADED SHEAR STUD — ASTM A108 TYPE B
7. WELDING ELECTRODE — AWS A5.1 OR A5.5 E70XX
8. STEEL DECK AND METAL STUDS — ASTM A653
F. TIMBER: ALL SAWN LUMBER SHALL HAVE 19% MAX MOISTURE CONTENT AND SHALL BE SURFACE DRY HEM FIR IN THE FOLLOWING GRADES:
1. JOISTS AND RAFTERS — NO. 2 OR BETTER
2. MISC. FRAMING (BLOCKING, SILL PLATES, ETC.) STUD OR BETTER
3. PLYWOOD PANELS - PROVIDE APA PERFORMANCE RATED PANELS COMPLYING WITH THE INDICATED REQUIREMENTS FOR THICKNESS, SPAN RATING AND EDGE DETAIL.

GENERAL

G-1 METHODS, PROCEDURES AND SEQUENCES OF CONSTRUCTION ARE THE RESPONSIBILITY OF THE CONTRACTOR. THE CONTRACTOR IS RESPONSIBLE FOR IDENTIFYING AND IMPLEMENTING THE NECESSARY PRECAUTIONS TO MAINTAIN AND ENSURE THE INTEGRITY OF THE STRUCTURE AT ALL STAGES OF CONSTRUCTION.

G-2 TEMPORARY BRACING, SHEETING, SHORING, ETC, REQUIRED TO ENSURE THE STRUCTURAL INTEGRITY/ STABILITY OF THE EXISTING BUILDINGS, SIDEWALKS, UTILITIES, ETC, DURING CONSTRUCTION IS THE RESPONSIBILITY OF THE CONTRACTOR AND SHALL BE DESIGNED BY A REGISTERED PROFESSIONAL ENGINEER EMPLOYED BY THE CONTRACTOR.

G-3 IMPLEMENTATION OF JOB SITE SAFETY IS THE SOLE RESPONSIBILITY OF THE CONTRACTOR.

G-4 SLEEVES OR BLOCK-OUTS REQUIRED FOR PASSAGE OF DUCTWORK, PIPING, DRAINS, CONDUIT, ETC, IN ADDITION TO ANCHORS AND HANGERS REQUIRED FOR EQUIPMENT AND PIPING AND UNDER-SLAB UTILITIES ARE NOT SPECIFICALLY, NOR GENERALLY, INDICATED ON THE STRUCTURAL DRAWINGS. THE CONTRACTOR IS RESPONSIBLE FOR DETERMINING SUCH REQUIREMENTS PRIOR TO FABRICATION OR ERECTION OF THE STRUCTURE. PENETRATIONS ARE SUBJECT TO APPROVAL BY THE STRUCTURAL ENGINEER OF RECORD.

G-5 DIMENSIONS AND INSTALLATION DETAILS OF PURCHASED EQUIPMENT MUST BE VERIFIED AND COORDINATED WITH THE SUPPORTING STRUCTURE. THE CONTRACTOR IS RESPONSIBLE FOR DETERMINING SUCH REQUIREMENTS FROM SUBCONTRACTORS AND EQUIPMENT SUPPLIERS ALONG WITH COORDINATING THE LOCATIONS AND DETAILS FOR THESE ITEMS PRIOR TO FABRICATION OR ERECTION OF THE SUPPORTING STRUCTURE. ANY CONFLICTS BETWEEN THESE ITEMS AND THE BUILDING STRUCTURE IS TO BE BROUGHT TO THE ATTENTION OF THE STUCTURAL ENGINEER OF RECORD FOR RESOLUTION.

G-6 THE STRUCTURAL DRAWINGS GOVERN THE WORK FOR STRUCTURAL FEATURES, UNLESS OTHERWISE NOTED. DIMENSIONS SHOWN ON PLANS AND DETAILS ARE TO GOVERN THE STRUCTURAL WORK. THE CONTRACTOR IS TO REFER TO THE ARCHITECTURAL DRAWINGS FOR DIMENSIONS AND DETAILS NOT PROVIDED.

G-7 IN CASE OF CONFLICT BETWEEN THE GENERAL NOTES, SPECIFICATIONS, AND DRAWINGS, THE MOST RIGID REQUIREMENTS AS DETERMINED BY THE STRUCTURAL ENGINEER OF RECORD WILL GOVERN.

G-8 WORK NOT INDICATED ON A PART OF THE DRAWINGS, BUT REASONABLY IMPLIED TO BE SIMILAR TO THAT SHOWN AT CORRESPONDING LOCATIONS, IS TO BE REPEATED.

G-9 EXISTING BUILDING INFORMATION SHOWN IS BASED UPON EXISTING BUILDING DOCUMENTS AND/OR FROM FIELD OBSERVATION. THE INFORMATION CONTAINED HEREIN MAY REQUIRE ADJUSTMENTS AND/OR MODIFICATIONS TO CONFORM TO EXISTING CONDITIONS. THE CONTRACTOR SHALL FIELD VERIFY ALL EXISTING BUILDING INFORMATION SHOWN (DIMENSIONS, ELEVATIONS, ETC) AND NOTIFY THE STRUCTURAL ENGINEER OF RECORD OF ANY DISCREPANCIES PRIOR TO FABRICATION OF ANY STRUCTURAL COMPONENT.

G-10 DETAILS DESIGNATED AS "TYPICAL DETAILS," APPLY GENERALLY TO THE DRAWINGS IN AREAS WHERE CONDITIONS ARE SIMILAR TO THOSE DESCRIBED IN THE DETAILS.

G-11 SHOP DRAWINGS:

A. SHOP DRAWINGS FOR ALL MATERIALS ARE TO BE SUBMITTED TO THE ENGINEER FOR REVIEW PRIOR TO THE START OF FABRICATION ORCOMMENCEMENT OF WORK PER THE PROJECT SPECIFICATIONS.

B. SHOP DRAWINGS MUST BE CHECKED AND STAMPED BY THE CONTRACTOR PRIOR TO SUBMISSION. THE CONTRACTOR'S STAMP OF APPROVAL WILL CONSTITUTE CERTIFICATION THAT THE CONTRACTOR HAS VERIFIED ALL FIELD MEASUREMENTS, CONSTRUCTION CRITERIA, MATERIALS AND SIMILAR DATA AND HAS CHECKED EACH DRAWING FOR COMPLETENESS,COORDINATION, AND COMPLIANCE WITH THE CONTRACT DOCUMENTS.

C. REPRODUCTION OF ANY PORTION OF THE STRUCTURAL CONTRACT DRAWINGS FOR SUBMITTAL AS SHOP DRAWINGS IS PROHIBITED.

D. CHANGES TO SHOP DRAWINGS THAT ARE RE-SUBMITTED MUST BE CLOUDED OR SOMEHOW INDICATE THAT A CHANGE HAS BEEN MADE TO PREVIOUSLY ISSUED AND REVIEWED DRAWING.

E. THE CONTRACTOR IS TO PROVIDE THE ENGINEER WITH WRITTEN NOTICE OF DEVIATIONS OF ANY TYPE FROM THE REQUIREMENTS OF THE CONSTRUCTION DOCUMENTS. THE NOTICE MUST BE RECEIVED PRIOR TO SHOP DRAWING SUBMITTAL. THE CONTRACTOR REMAINS LIABLE FOR ANY DEVIATION UNLESS REVIEWED BY THE ENGINEER AND ACKNOWLEDGED IN WRITING, PRIOR TO THE RECEIPT OF THE SHOP DRAWINGS.

FOUNDATIONS

F-1 FOUNDATIONS HAVE BEEN DESIGNED AND ARE TO BE CONSTRUCTED IN ACCORDANCE WITH CRITERIA ESTABLISHED BY GEODESIGN, INC. IN THEIR GEOTECH REPORT PREPARED FOR THIS PROJECT DATED FEBRUARY 10, 2011.THIS REPORT IN CONSIDERED PART OF THESE CONSTRUCTION DOCUMENTS.

F-2 FOUNDATIONS ARE TO BE PLACED ON COMPACTED FILL CONFORMING TO THE GEOTECHNICAL REPORT. THE CONTRACTOR SHALL BE RESPONSIBLE FOR COMPLETE EXCAVATION, REMOVAL AND REPLACEMENT OF THE UNSUITABLE ORGANICS FROM BELOW, AND WITHIN THE INFLUENCE OF, THE FOOTINGS. MINIMUM HORIZONTAL EXCAVATION LIMITS EXTEND FROM ONE FOOT BEYOND THE FOOTING AND THEN AT A 1V:1H DOWNWARD SLOPE UNTIL THE SUITABLE NATURAL SAND LAYER IS ENCOUTERED AS DETERMINED BY THE CONTRACTOR'S GEOTECHNICAL ENGINEER AND BY THE DEPARTMENT. WHERE THESE HORIZONTAL LIMITS INTERSECT THE SHEET PILING LEFT IN PLACE (RAILROAD), NO FURTHER EXCAVATION IS REQUIRED IN THAT DIRECTION. TO MINIMIZE THE HORIZONTAL EXTEND OF EXCAVATION IN OTHER DIRECTIONS, THE FOOTINGS MAY BE LOWERED TO BEAR ON THE UNDERLYING NATURAL DEPOSIT.

AFTER EXCAVATION OF THE ORGANICS, THE CONTRACTOR SHALL PROOF-ROLL THE SUBGRADE WITH MULTIPLE OVERLAPPING PASSES OF A SMOOTH DRUM ROLLER OR BY STATIC PROOF-ROLLING. IF STATIC PROOF-ROLLING IS PERFORMED, DENSE-GRADE AGGREGATE [E.G. PERVIOUS STRUCTURAL BACKFILL (PSB)] SHALL BE PLACED AND COMPACTED WITH STATIC ROLLING OVER THE PREPARED SUBGRADE. EXCAVATED UNSUITABLE SOILS SHALL BE REPLACED WITH GRANULAR FILL (GF), COMPACTED GRANULAR FILL (CGF), OR CRUSHED STONE TO THE SAME MINIMUM HORIZONTAL LIMITS EXPRESSED ABOVE, COMPACTED TO A MINIMUM OF 95-PERCENT OF THE CHOSEN MATERIALS MAXIMUM DENSITY.

COMPCATED GRANULAR FILL SHALL BE USED IF THE EXCAVATED DEPTH BELOW BFE IS GREATER THAN 2 FEET, GRANULAR FILL SHALL BE USED IF THE DEPTH IS LESS THAN 2 FEET, AND PERVIOUS STRUCTURE BACKFILL SHALL BE USED IF STATIC PROOF-ROLLING IS EMPLOYED. CGF, GF, AND PSB SHALL BE PLACED IN ACCORDANCE WITH THE DEPARTMENT'S STANDARD SPECIFICATIONS, FORM 816, SECTIONS 2.14, 2.13, AND 2.16 RESPECTIVELY. PAYMENT FOR THE REMOVAL OF UNSUITABLE SOILS AND THE PLACING AND COMPACTION OF APPROPRIATE MATERIALS AS DESCRIBED ABOVE FOR THE PLATFORM, TOWER AND STAIR CONSTRUCTION SHALL BE INCLUDED IN THE LUMP SUM "RAIL FACILITY UPGRADE".

F-3 THE CONTRACTOR IS TO RETAIN THE SERVICES OF A PROFESSIONAL GEOTECHNICAL ENGINEER, SUBJECT TO THE APPROVAL OF THE OWNER; TO VERIFY THAT THE MATERIAL ON WHICH FOUNDATIONS BEAR HAS AT LEAST THE CAPACITY AS NOTED IN THE DESIGN CRITERIA. THE GEOTECHNICAL ENGINEER IS TO MAKE RECOMMENDATIONS FOR IMPROVING THE AREAS THAT DO NOT MEET THE DESIGN CRITERIA.

F-4 ELEVATIONS SHOWN ON THE DRAWINGS AT WHICH FOUNDATIONS BEAR ARE APPROXIMATE AND MAY VARY TO SUIT SUBSURFACE SOIL CONDITIONS. ANY BOTTOM OF FOOTING ELEVATIONS AT FOOTING STEP LOCATIONS, SHOWN ON THE DRAWINGS, ARE TO BE FIELD VERIFIED AND ADJUSTED AS REQUIRED SO THAT FOUNDATIONS BEAR ON MATERIAL OF AT LEAST THE CAPACITY NOTED ABOVE.

FOUNDATIONS (CONTINUE)

F-5 PRIOR TO PLACING CONCRETE, ANY WATER PRESENT IS TO BE PUMPED OUT FROM THE BOTTOM OF EXCAVATIONS TO A LEVEL APPROVED BY THE GEOTECHNICAL ENGINEER.

F-6 NO BACKFILLING AGAINST WALLS IS TO BE DONE UNTIL THE SLABS AT THE TOP AND BOTTOM HAVE BEEN PLACED OR ADEQUATE SHORING HAS BEEN PROVIDED. WALLS AND GRADE BEAMS HAVING BACKFILL AGAINST BOTH SIDES ARE TO HAVE BACKFILL PLACED ON BOTH SIDES SIMULTANEOUSLY.

REINFORCED CONCRETE

C-1 MIXING, TRANSPORTING, PLACING AND TESTING OF CONCRETE IN ACCORDANCE WITH ACI 301.

C-2 PRIOR TO CONCRETE PLACEMENT, THE CONTRACTOR MUST SUBMIT CONCRETE MIX DESIGNS FOR EACH TYPE OF CONCRETE TO BE USED, PREPARED IN ACCORDANCE WITH THE PROJECT SPECIFICATIONS TO STRUCTURAL ENGINEER OF RECORD FOR REVIEW.

C-3 THE SLUMP AT POINT OF PLACEMENT IS NOT TO EXCEED 4"(+/-) 1" AND THE WATER/CEMENT RATIO IS NOT TO EXCEED 0.45. IF ADDITIONAL SLUMP 8" IS DESIRED FOR PUMPING, A SUPER-PLASTICIZER ADMIXTURE MAY BE ADDED.
A. AIR ENTRAINMENT: 5% TO 7% IN CONCRETE EXPOSED TO FREEZE/THAW.

C-4 REINFORCEMENT IS TO BE DETAILED, FABRICATED, AND PLACED IN ACCORDANCE WITH THE ACI "DETAILING MANUAL NO. SP-66" (LATEST EDITION).

C-5 PROVIDE ADEQUATE CONCRETE COVER IN ACCORDANCE WITH THE REQUIREMENTS AS SET FORTH BY ACI 318.

C-6 REINFORCEMENT IS TO BE SECURELY HELD IN PLACE WHILE PLACING CONCRETE. IF REQUIRED, ADDITIONAL BARS, STIRRUPS, OR CHAIRS WILL BE PROVIDED BY THE CONTRACTOR TO FURNISH SUPPORT FOR ALL BARS WHERE NECESSARY DURING CONSTRUCTION.

C-7 CONTINUOUS REINFORCING BARS TO BE TURNED AND LAPPED AT CORNERS AND INTERSECTIONS OF WALLS AND FOOTINGS. LAP SPLICES TO BE CLASS B TENSION SPLICES PER ACI 318. HOOKED BARS TO HAVE STANDARD ACI HOOKS UNO.

C-8 CONTINUOUS TOP BARS TO BE SPLICED AT MID-SPAN. CONTINUOUS BOTTOM BARS TO BE SPLICED AT CENTERLINE OF SUPPORTS (OR AS SHOWN ON DETAILS).

C-9 WELDED WIRE REINFORCEMENT IS TO BE SUPPLIED IN FLAT SHEETS ONLY. LAP WELDED WIRE REINFORCEMENT TWO FULL MESH LENGTHS (OR 6" MIN) AT SPLICES AND WIRE TOGETHER. WELDED WIRE REINFORCEMENT TO BE PLACED 1/4 TH THE SLAB THICKNESS FROM THE TOP OF SLABS, UON.

C-10 SLEEVES, INSERTS, MECHANICAL OPENINGS, CONDUITS, PIPES, RECESSES, DEPRESSIONS, CURBS AND OTHER EMBEDDED ITEMS TO BE PROVIDED FOR AS SHOWN ON THE ARCHITECTURAL, MECHANICAL AND ELECTRICAL DRAWINGS AND AS REQUIRED BY EQUIPMENT MANUFACTURERS. INSTALLATION OF THESE ITEMS TO BE COORDINATED AND PROVIDED FOR PRIOR TO PLACING CONCRETE.

C-11 PROVIDE BLOCK-OUTS AS REQUIRED FOR PRE-CAST CONCRETE PANEL ANCHORAGE. FILL WITH CONCRETE ONCE PANEL IS IN PLACE.

PRE-CAST CONCRETE

PC-1 PRE-CAST CONCRETE UNITS MUST BE DESIGNED AND CONSTRUCTED IN ACCORDANCE WITH THE PRE-CAST CONCRETE INSTITUTE (PCI) DESIGN HANDBOOK AND ACI 318 (LATEST EDITIONS).

PC-2 PRE-CAST TO PRE-CAST AND PRE-CAST TO FOUNDATION CONNECTIONS, INCLUDING ANCHOR RODS, ARE TO BE DESIGNED AND DETAILED BY THE PRE-CAST MANUFACTURER. ALL LOOSE STEEL PLATES, CLIP-ANGLES, SEAT BRACKETS AND ANGLES, ANCHORS, DOWELS, CLAMPS, HANGERS, AND OTHER MISCELLANEOUS STEEL SHAPES NECESSARY FOR INSTALLING AND SECURING PRE-CAST UNITS OR PANELS TO THE BUILDING STRUCTURAL SYSTEM MUST BE PROVIDED BY THE PRE-CAST MANUFACTURER.

PC-3 PRIOR TO FABRICATION, THE PRE-CAST MANUFACTURER IS TO SUBMIT TO THE STRUCTURAL ENGINEER OF RECORD FOR REVIEW THE FOLLOWING, PREPARED BY OR UNDER THE SUPERVISION OF A PROFESSIONAL ENGINEER REGISTERED IN THE STATE OF WHICH THE PROJECT IS CONSTRUCTED AND BEARING THE SEAL OF THE PROFESSIONAL ENGINEER:
A. DESIGN CALCULATIONS OF PRE-CAST UNITS, INTEGRATED SUPPORT MEMBERS AND CONNECTIONS.
B. SHOP DRAWINGS SHOWING ERECTION PLANS, DIMENSIONS, REINFORCING REQUIREMENTS, CONSTRUCTION DETAILS, DESIGN CRITERIA, LOAD CAPACITIES, OPENING SIZES AND LOCATIONS AND FOUNDATION LOADS.

PC-4 PRE-CAST CONCRETE STAIRS ARE TO BE SOLID UNITS DESIGNED BY THE PRE-CAST MANUFACTURER IN ACCORDANCE WITH LOADINGS PROVIDED. REFERENCE THE ARCHITECTURAL DRAWINGS FOR DIMENSIONS, NOSING AND RAILING REQUIREMENTS, ETC.

PC-5 STRUCTURAL STEEL ANGLES, PLATES AND BOLTS TO HOT DIPPED GALVANIZED AFTER FABRICATION. ALL PERMANENTLY EXPOSED CONNECTION PLATES TO BE 304L OR 316L STAINLESS STEEL.

PC-6 ALL OPENINGS (SHOP AND FIELD CUT) MUST BE SHOWN ON FINAL APPROVED SHOP DRAWINGS. FIELD CUT OPENINGS ARE NOT PERMITTED UNLESS SPECIFICALLY SHOWN ON THE SHOP DRAWINGS AND ACCOUNTED FOR IN THE DESIGN BY THE PRE-CAST MANUFACTURER.

PRE-CAST CONCRETE (CONTINUE)

PC-7 REFER TO ARCHITECTURAL DRAWINGS FOR DIMENSIONS AND REVEALS NOT SHOWN.

PC-8 PRE-CAST CONCRETE PLANK:

A. PRE-CAST CONCRETE FLOOR TOPPING THICKNESS SHALL BE MEASURED AT PLANK BEARING.
B. PRE-CAST CONCRETE PLANKS ARE TO BE DESIGNED FOR SUPERIMPOSED DEAD AND LIVE LOADS INDICATED ON THE DRAWINGS, AND IN ACCORDANCE WITH ALL APPLICABLE BUILDING CODES AND REGULATIONS. ADDITIONALLY, DESIGN THE PANELS FOR ALL STRESSES INDUCED BY THE LIFTING AND ERECTION PROCESS.
C. PRE-CAST MANUFACTURER MUST CONSULT ARCHITECTURAL, MECHANICAL AND ELECTRICAL DRAWINGS FOR OPENINGS REQUIRED IN PRE-CAST PLANK IN ADDITION TO THOSE INDICATED ON THE STRUCTURAL DRAWINGS. REINFORCE PLANK, OR PROVIDE HEADER, AS REQUIRED.
D. FOLLOWING ERECTION, DEFLECTION OF PRE-CAST UNITS ARE NOT TO EXCEED THE SPAN/360 FOR THE SUM OF DEFLECTIONS DUE TO LIVE LOAD, LONG-TERM SUSTAINED LOADS AND LONG-TERM CAMBER DUE TO PRE-STRESS.
E. CONCRETE FOR TOPPING SLABS SHALL HAVE A MINIMUM COMPRESSIVE STRENGTH (f'c) OF NOT LESS THAN 5000 PSI AT 28 DAYS.
F. SURFACE OF PRE-CAST PLANK TO RECEIVE COMPOSITE CONCRETE TOPPING MUST BE CLEANED AND PREPARED IN ACCORDANCE WITH THE RECOMMENDATIONS OF ACI 302.1 (LATEST EDITION).
G. COMPOSITE CONCRETE TOPPING TO BE REINFORCED WITH 6x6-W2.9xW2.9 WELDED WIRE FABRIC (FURNISHED IN SHEETS).
H. COMPOSITE CONCRETE TOPPING SHALL BE USED TO FILL PLANK END JOINTS AND PORTIONS OF CORES OVER COMPOSITE STEEL BEAMS. PROVIDE FORMS AS REQUIRED TO KEEP CEMENT GROUT FROM FILLING END JOINTS OVER COMPOSITE BEAMS.

STRUCTURAL STEEL

S-1 PRIOR TO FABRICATION, THE STEEL FABRICATOR IS TO SUBMIT TO THE STRUCTURAL ENGINEER OF RECORD FOR REVIEW THE FOLLOWING:
A. DESIGN CALCULATIONS OF STRUCTURAL STEEL CONNECTIONS, PREPARED BY OR UNDER THE SUPERVISION OF A PROFESSIONAL ENGINEER REGISTERED IN THE STATE OF WHICH THE PROJECT IS CONSTRUCTED AND BEARING THE SEAL OF THE PROFESSIONAL ENGINEER.
B. SHOP DRAWINGS SHOWING ERECTION PLANS, PIECE DRAWINGS, AND CONNECTION DETAILS.

S-2 THE STRUCTURAL STEEL FABRICATOR, AND/OR GENERAL CONTRACTOR, MUST VERIFY ALL EXISTING DIMENSIONS AND CONDITIONS AT THE SITE. ALL DISCREPANCIES FOUND ARE TO BE REPORTED TO THE STRUCTURAL ENGINEER OF RECORD PRIOR TO PREPARATION OF SHOP DRAWINGS. SHOP DRAWINGS ARE TO INCLUDE ALL FIELD MEASUREMENTS AND CONDITIONS.

S-3 STRUCTURAL STEEL FABRICATOR IS TO PROVIDE FOR VERTICAL AND HORIZONTAL FIELD ADJUSTMENT OF ALL SUPPORT ASSEMBLIES.

S-4 CUTS, HOLES, COPING, ETC REQUIRED FOR OTHER TRADES MUST BE SHOWN ON THE SHOP DRAWINGS AND MADE IN THE SHOP. CUTS OR BURNING OF HOLES IN THE FIELD WILL NOT BE PERMITTED.

S-5 STEEL BEAMS ARE TO BE EQUALLY SPACED IN BAYS UNLESS OTHERWISE NOTED.

S-6 FABRICATE AND INSTALL BEAMS WITH NATURAL CAMBER UP UNLESS CAMBER IS NOTED ON THE DRAWINGS.

S-7 ALL STRUCTURAL STEEL FRAMES AND TRUSSES ARE TO BE SECURELY BRACED UNTIL ALL FLOOR SLABS AND ROOF DECKS HAVE BEEN INSTALLED AND BECOME CAPABLE OF STABILIZING THE FRAMES.

S-8 SIMPLE SHEAR CONNECTIONS SHALL BE SELECTED AND DETAILED BY THE FABRICATOR IN ACCORDANCE WITH AISC. CONNECTIONS TO BE DESIGNED 1.25 TIMES THE REACTIONS INDICATED. IF NO REACTION IS INDICATED, THEN CONNECTION TO BE DESIGNED FOR 10 KIP REACTION. MINIMUM FILLECT WELD $\frac{3}{16}$" FILLET WELD. MINIMUM NUMBER OF BOLTS PER CLIP ANGLE OR SINGLE PLATE:

BEAM SIZE	MIN. NO. OF BOLTS
W8, W10	2
W12, W14	3
W16, W18	4
W21	5
W24	6
W27	7
W30	8
W33	9
W36	10

S-9 UNLESS OTHERWISE NOTED, STRUCTURAL STEEL CONNECTIONS TO BE SHOP WELDED AND FIELD BOLTED.
A. BOLTS: $\frac{3}{4}$" DIAMETER ASTM A 325 UNO WITH MATCHING WASHERS AND HEAVY HEX NUTS. USE TYPE N (HIGH STRENGTH) FOR FRAMED CONNECTIONS AND TYPE SC AT WIND MOMENT AND BRACING CONNECTIONS.

S-10 EXPANSION BOLTS TO BE STUD TYPE, CARBON STEEL ANCHORS OF THE DIAMETER AND EMBEDMENT INDICATED ON THE DRAWINGS. USE HILTI KWIK BOLT TZ EXPANSION ANCHORS MANUFACTURED BY HILTI FASTENING SYSTEMS OR APPROVED EQUAL. INSTALL PER MANUFACTURERS RECOMMENDATIONS.

S-11 SUBSTITUTION OF EXPANSION ANCHORS FOR EMBEDDED ANCHORS SHOWN ON THE DRAWINGS WILL NOT BE PERMITTED.

STRUCTURAL STEEL (CONTINUE)

S-12 PAINT AND PROTECTION:

A. STRUCTURAL STEEL, UON, TO BE SHOP CLEANED PER SSPC SP3 AND PAINTED ONE SHOP COAT OF FABRICATOR'S STANDARD RUST INHIBITING PRIMER. TOUCH UP AFTER ERECTION.
B. DO NOT PAINT STEEL WHERE ENCASED WITH CONCRETE, OR AT FIELD WELD AREAS.
C. DO NOT PAINT THE TOP FLANGE OF BEAMS TO RECEIVE COMPOSITE SHEAR CONNECTORS.
D. EXPOSED STRUCTURAL STEEL TO RECEIVE PAINTED FINISH TO BE SHOP CLEANED AND PRIME PAINTED PER THE SPECIFICATIONS. REFERENCE ARCHITECTURE FOR FINISH PAINT SYSTEMS.
E. EXPOSED STRUCTURAL STEEL FOR SCREEN WALLS, EQUIPMENT PLATFORMS, LOOSE ANGLE LINTELS ETC, TO BE HOT DIPPED GALVANIZED PER ASTM.
F. GALVANIZED FASTENERS AND ACCESSORIES TO BE HOT DIPPED GALVANIZED PER ASTM A153/A153M.
G. REPAIR DAMAGE TO GALVANIZED COATINGS USING ASTM A780 ZINC RICH PAINT.

STRUCTURAL WOOD

W-1 SAWN LUMBER SHALL BE IN ACCORDANCE WITH THE NFPA NATIONAL DESIGN SPECIFICATIONS.

W-2 PLYWOOD SHEATHING SHALL BE IN CONFORMANCE WITH AMERICAN PLYWOOD ASSOCIATION (APA) SPECIFICATIONS.
A. ROOF (TONGUE & GROOVE): DOUGLAS FIR LARCH
B. INSTALL PANELS WITH A ⅛" CLEAR SPACING AT ALL PANEL ENDS AND EDGE JOINTS.

W-3 ALL CONNECTIONS FOR TO BE MADE WITH APPROPRIATE METAL HANGERS, FRAMING ANGLES, CONNECTORS, STRAPS, ETC.
A. BOLTS OR LAG SCREWS PER ASTM A307 SPECIFICATIONS.
B. NAILS TO BE COMMON NOT BOX. NAILS TO BE GALVANIZED.
C. THE QUANTITY AND SIZE OF NAILS AND OTHER FASTENERS CONNECTING WOOD MEMBERS MUST NOT BE LESS THAN THE FASTENING SCHEDULE SET FORTH IN THE APPLICABLE BUILDING CODE.

W-4 PROVIDE CORROSION RESISTANT, LIGHT GAGE METAL FRAMING CONNECTORS AS INDICATED ON THE ARCHITECTURAL AND STRUCTURAL DRAWINGS AND IN THE SPECIFICATIONS. PROVIDE MAXIMUM NUMBER AND SIZE OF FASTENERS ACCORDING TO MANUFACTURERS WRITTEN INSTRUCTIONS. UNLESS NOTED OTHERWISE, PROVIDE CONNECTORS WITH THE FOLLOWING MINIMUM CAPACITIES:
A. TENSILE CAPACITY: 500 lbs
B. PERPENDICULAR TO THE MEMBER: 200 lbs
C. PARALLEL TO THE MEMBER: 300 lbs
D. JOIST HANGERS: 500 lbs

W-5 PROVIDE NAILED CONNECTIONS FOR PLYWOOD SHEATHING AS FOLLOWS:
A. ROOF: 8d NAILS SPACED 6" OC EDGE, 12" OC FIELD

KEYS AND ABBREVIATIONS

A/E	ARCHITECT/ENGINEER
AB	ANCHOR BOLT
ABV	ABOVE
ACI	AMERICAN CONCRETE INSTITUTE
ADDL	ADDITIONAL
AFF	ABOVE FINISHED FLOOR
AHU	AIR HANDLING UNIT
AISC	AMERICAN INSTITUTE OF STEEL CONSTRUCTION
ALT	ALTERNATE
APPROX	APPROXIMATE
ARCH	ARCHITECT OR ARCHITECTURAL(S)
ASTM	AMERICAN SOCIETY FOR TESTING AND MATERIALS
B PL	BASE PLATE OR BEARING PLATE
B/	BOTTOM OF
BF	BOTH FACES
BLDG	BUILDING
BLK	BLOCK
BM	BEAM
BRG	BEARING
BS	BOTH SIDES
BT	BENT
BTWN	BETWEEN
CF	CUBIC FOOT OR CUBIC FEET
CHAM	CHAMFER
CIP	CAST IN PLACE
CJ	CONTROL JOINT
CLR	CLEAR
CMU	CONCRETE MASONRY UNIT
COL	COLUMN
CONC	CONCRETE
CONN	CONNECTION
CONST	CONSTRUCTION
CONT	CONTINUOUS
CRSI	CONCRETE REINFORCING STEEL INSTITUTE
CT	CANTILEVER
db	BAR DIAMETER
DBL	DOUBLE
DET	DETAIL
DIA	DIAMETER
DIAG	DIAGONAL
DIM	DIMENSION
DL	DEAD LOAD
DN	DOWN
DWG	DRAWING
DWL	DOWEL
EA	EACH
EF	EACH FACE
EL	ELEVATION
ELEC	ELECTRICAL
EMBED	EMBED(ED)(MENT)
ENGR	ENGINEER
EOS	EDGE OF SLAB
EQ	EQUAL
EQUIP	EQUIPMENT
EST	ESTIMATE(D)
EW	EACH WAY
EXC	EXCAVATE OR EXCAVATION
EXIST	EXISTING
EXP	EXPANSION
EXT	EXTERIOR
FD	FLOOR DRAIN
FDN	FOUNDATION
FF	FAR FACE
FIN	FINISHED
FL	FLOOR
FS	FAR SIDE
FT	FOOT OR FEET
FTG	FOOTING
GA	GAGE OR GAUGE
GALV	GALVINIZED
GB	GRADE BEAM
GC	GENERAL CONTRACTOR
HORIZ	HORIZONTAL
HP	HIGH POINT
HT	HEIGHT
ID	INSIDE DIAMETER
IN	INCH(ES)
INCL	INLUDE(D)(ING), INCLUSIVE
INFO	INFORMATION
INT	INTERIOR
ISO JT	ISOLATION JOINT
JST	JOIST
JT	JOINT
K	KIP(S)
KB	KNEE BRACE
KCF	KIPS PER CUBIC FEET
KLF	KIPS PER LINEAR FOOT
KSF	KIPS PER SQUARE FEET
KSI	KIPS PER SQUARE INCH
L	LENGTH
LB	POUND
ld	DEVELOPMENT LENGTH
LL	LIVE LOAD
LLH	LONG LEG HORIZONTAL
LLV	LONG LEG VERTICAL
LONG	LONGITUDINAL
LP	LOW POINT
LWC	LIGHT-WEIGHT CONCRETE
MAS	MASONRY
MATL	MATERIAL
MAX	MAXIMUM
MCJ	MASONRY CONTROL JOINT
MECH	MECHANICAL(S)
M/E/P	MECHANICAL, ELECTRICAL & PLUMBING
MFR	MANUFACTURER
MID	MIDDLE
MIN	MINIMUM
MISC	MISCELLANEOUS
MO	MASONRY OPENING
MP	MASONRY PIER
N	NORTH
NF	NEAR FACE
NIC	NOT IN CONTRACT
NO	NUMBER
NOM	NOMINAL
NS	NEAR SIDE
NTS	NOT TO SCALE
NWC	NORMAL-WEIGHT CONCRETE
OC	ON CENTER
OD	OUTSIDE DIAMETER
OPNG	OPENING
OPP HAND	OPPOSITE HAND
PCF	POUNDS PER CUBIC FEET
PCI	POUNDS PER CUBIC INCH
PERM	PERMANENT
PLF	POUNDS PER LINEAR FOOT
P/S	PRESTRESSED CONCRETE
PSF	POUNDS PER SQUARE FEET
PSI	POUNDS PER SQUARE INCH
PVMT	PAVEMENT
RAD	RADIUS OR RADII
RE:	REFER TO
REF	REFERENCE
REINF	REINFORCEMENT
REQD	REQUIRED
REV	REVISION OR REVISE
RTU	ROOF TOP UNIT
SC	SLIP CRITICAL
SCHED	SCHEDULE
SDI	STEEL DECK INSTITUTE
SECT	SECTION
SER	STRUCTURAL ENGINEER OF RECORD
SHT	SHEET
SIM	SIMILAR
SL	SLOPE(D) OR SLOPING
SLV	SLEEVE
SOG	SLAB ON GRADE
SP	SPACE(S)
SPA	SPACES OR SPACING
SPEC	SPECIFICATIONS
SS	STAINLESS STEEL
STD	STANDARD
STIFF	STIFFENER
STL	STEEL
STRUCT	STRUCTURAL
T	THICKNESS
T&B	TOP & BOTTOM
T&S	TEMPERATURE & SHRINKAGE
T/	TOP OF
TEMP	TEMPORARY
THD	THREAD(ED)
THK	THICKNESS
TPE	TOP OF PIER ELEVATION
TRANS	TRANSVERSE
TSE	TOP OF SHELF ELEVATION
TSF	TONS PER SQUARE FEET
TWE	TOP OF WALL ELEVATION
TYP	TYPICAL
UNO	UNLESS NOTED OTHERWISE
VERT	VERTICAL
VIF	VERIFY IN FIELD
W	WIDTH
W/	WITH
W/O	WITHOUT
WL	WIND LOAD
WP	WORKING POINT
WT	WEIGHT
WWF	WELDED WIRE FABRIC
WWR	WELDED WIRE REINFORCEMENT

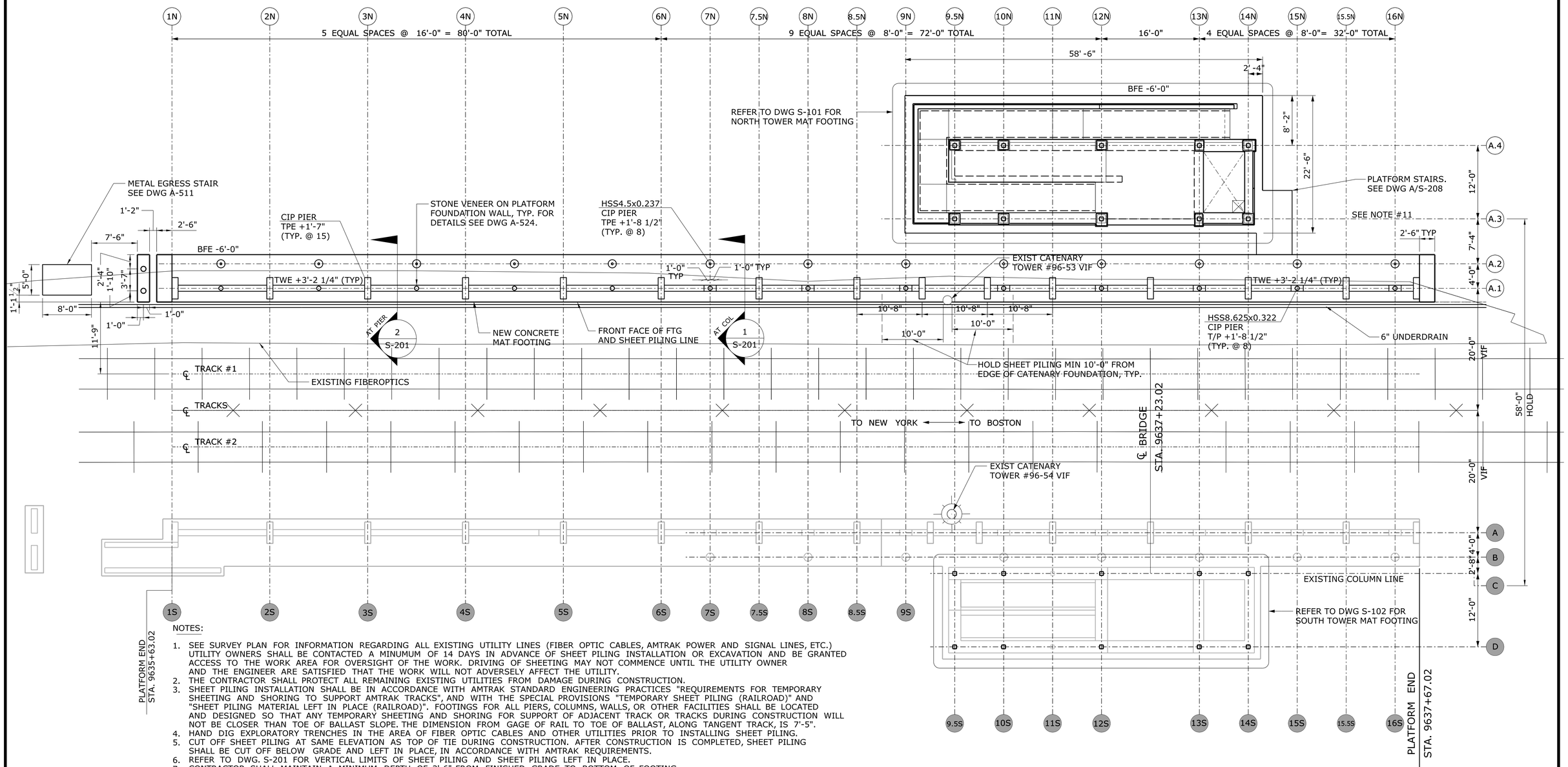

NOTES:

1. SEE SURVEY PLAN FOR INFORMATION REGARDING ALL EXISTING UTILITY LINES (FIBER OPTIC CABLES, AMTRAK POWER AND SIGNAL LINES, ETC.) UTILITY OWNERS SHALL BE CONTACTED A MINUMUM OF 14 DAYS IN ADVANCE OF SHEET PILING INSTALLATION OR EXCAVATION AND BE GRANTED ACCESS TO THE WORK AREA FOR OVERSIGHT OF THE WORK. DRIVING OF SHEETING MAY NOT COMMENCE UNTIL THE UTILITY OWNER AND THE ENGINEER ARE SATISFIED THAT THE WORK WILL NOT ADVERSELY AFFECT THE UTILITY.
2. THE CONTRACTOR SHALL PROTECT ALL REMAINING EXISTING UTILITIES FROM DAMAGE DURING CONSTRUCTION.
3. SHEET PILING INSTALLATION SHALL BE IN ACCORDANCE WITH AMTRAK STANDARD ENGINEERING PRACTICES "REQUIREMENTS FOR TEMPORARY SHEETING AND SHORING TO SUPPORT AMTRAK TRACKS", AND WITH THE SPECIAL PROVISIONS "TEMPORARY SHEET PILING (RAILROAD)" AND "SHEET PILING MATERIAL LEFT IN PLACE (RAILROAD)". FOOTINGS FOR ALL PIERS, COLUMNS, WALLS, OR OTHER FACILITIES SHALL BE LOCATED AND DESIGNED SO THAT ANY TEMPORARY SHEETING AND SHORING FOR SUPPORT OF ADJACENT TRACK OR TRACKS DURING CONSTRUCTION WILL NOT BE CLOSER THAN TOE OF BALLAST SLOPE. THE DIMENSION FROM GAGE OF RAIL TO TOE OF BALLAST, ALONG TANGENT TRACK, IS 7'-5".
4. HAND DIG EXPLORATORY TRENCHES IN THE AREA OF FIBER OPTIC CABLES AND OTHER UTILITIES PRIOR TO INSTALLING SHEET PILING.
5. CUT OFF SHEET PILING AT SAME ELEVATION AS TOP OF TIE DURING CONSTRUCTION. AFTER CONSTRUCTION IS COMPLETED, SHEET PILING SHALL BE CUT OFF BELOW GRADE AND LEFT IN PLACE, IN ACCORDANCE WITH AMTRAK REQUIREMENTS.
6. REFER TO DWG. S-201 FOR VERTICAL LIMITS OF SHEET PILING AND SHEET PILING LEFT IN PLACE.
7. CONTRACTOR SHALL MAINTAIN A MINIMUM DEPTH OF 3'-6" FROM FINISHED GRADE TO BOTTOM OF FOOTING.
8. SEE CIVIL GRADING PLAN FOR FINAL GRADE AT PLATFORM LOCATION.
9. THE CONTRACTOR SHALL OBTAIN OUTSIDE RAIL ELEVATION AT ALL COLUMN LINE LOCATIONS. ESTABLISHED TOP OF PLATFORM ELEVATIONS SHALL BE SUBMITTED TO THE ENGINEER FOR APPROVAL. CONSTRUCTION WILL NOT BE PERMITTED WITHOUT PRIOR APPROVAL OF THE ENGINEER.
10. REFER TO ARCHITECTURAL DRAWINGS FOR APPROXIMATE TOP OF RAIL ELEVATIONS ALONG PLATFORM.
11. NEW COLUMN LINE A.3 SHOULD BE PARALLEL AND ALIGNED WITH EXISTING COLUMN LINE "C" TO ENSURE THE BRIDGE BEARING LOCATIONS ARE TRUE.

OVERALL FOUNDATION PLAN

SCALE: 1/8"=1'-0"

REV.	DATE	REVISION DESCRIPTION	SHEET NO.

Filename: FD_MSH_STR_0027_0059_S-100.dgn

THE INFORMATION, INCLUDING ESTIMATED QUANTITIES OF WORK, SHOWN ON THESE SHEETS IS BASED ON LIMITED INVESTIGATIONS BY THE STATE AND IS IN NO WAY WARRANTED TO INDICATE THE CONDITIONS OF ACTUAL QUANTITIES OF WORK WHICH WILL BE REQUIRED.

Date Plotted: January 01, 2009

DESIGNER/DRAFTER: KR-M

CHECKED BY: MDD

SCALE AS NOTED

STATE OF CONNECTICUT
DEPARTMENT OF TRANSPORTATION

ENGINEER: BAKER ENGINEERING

APPROVED BY: -

DATE: -

PROJECT TITLE: SHORE LINE EAST RAILROAD STATIONS

TOWN: CLINTON

DRAWING TITLE: FOUNDATION PLAN

PROJECT NO. 310-0059

DRAWING NO. S-100

SHEET NO. 06.04

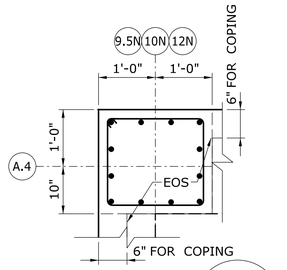

PLAN DETAIL - P1 (A / S-101)
SCALE: 3/4" = 1'-0"

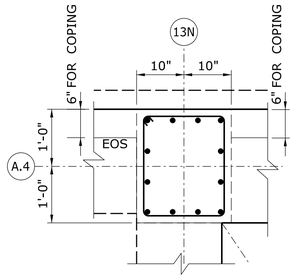

PLAN DETAIL - P2 (B / S-101)
SCALE: 3/4" = 1'-0"

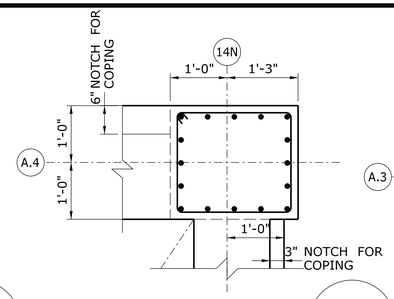

PLAN DETAIL - P3 (C / S-101)
SCALE: 3/4" = 1'-0"

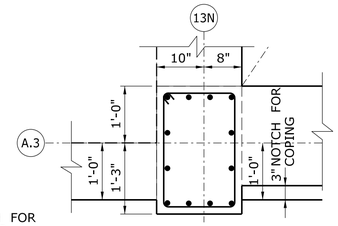

PLAN DETAIL - P4 (D / S-101)
SCALE: 3/4" = 1'-0"

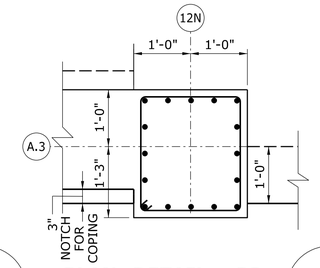

PLAN DETAIL - P3 (E / S-101)
SCALE: 3/4" = 1'-0"

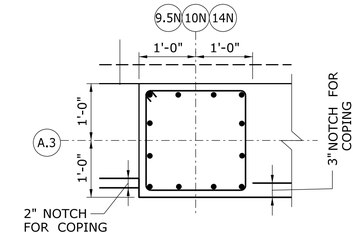

PLAN DETAIL - P5 (F / S-101)
SCALE: 3/4" = 1'-0"

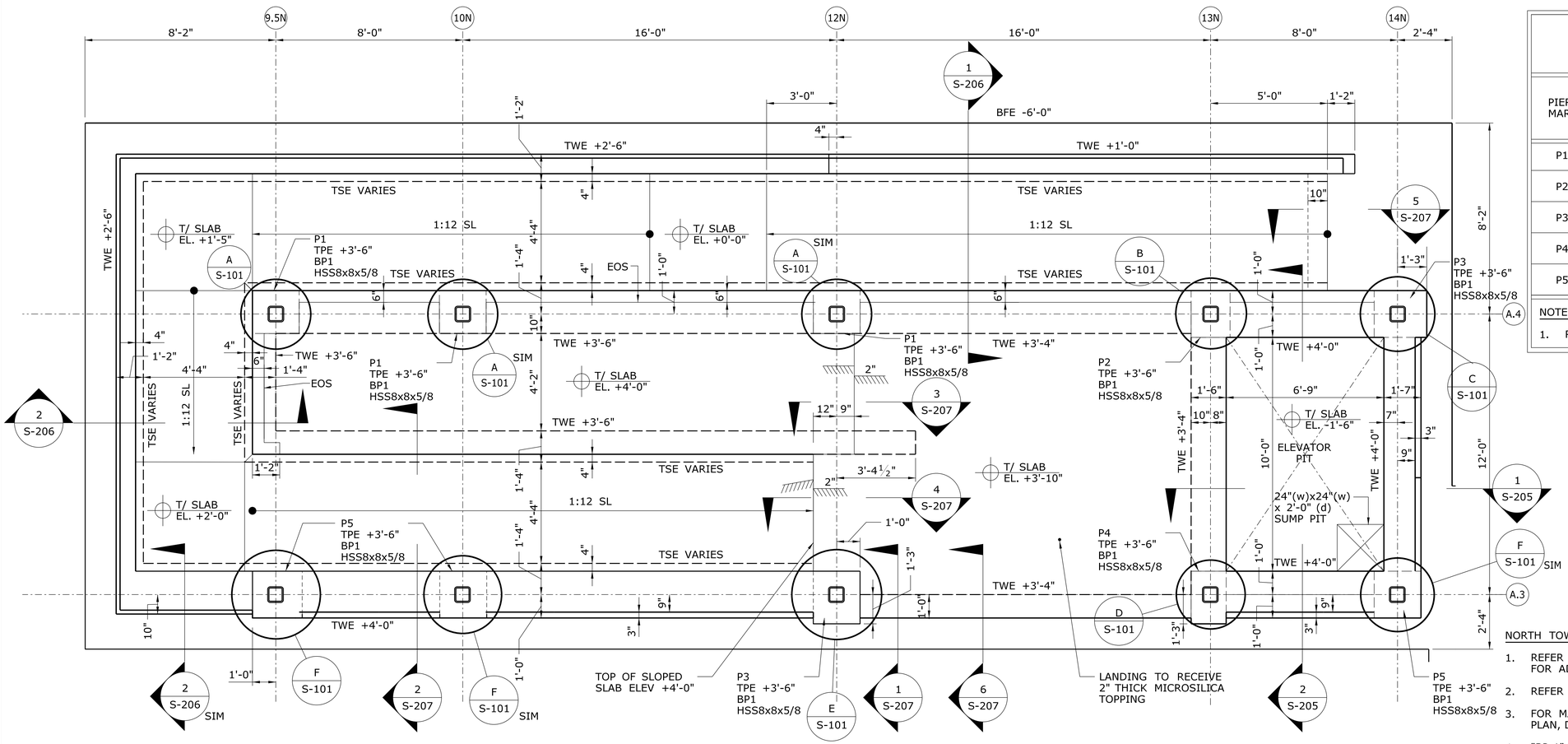

NORTH TOWER FOUNDATION PLAN
SCALE: 3/8"=1'-0"

CONCRETE PIER SCHEDULE

PIER MARK	PIER SIZE		LONGITUDINAL REINF		CLOSED TIE REINF	
	LENGTH	WIDTH	QUANTITY	BAR SIZE	BAR SIZE	SPACING
P1	22"	24"	12	#6	#3	12" OC
P2	24"	20"	12	#6	#3	12" OC
P3	24"	27"	16	#6	#3	12" OC
P4	27"	18"	12	#6	#3	12" OC
P5	24"	24"	12	#6	#3	12" OC

NOTES:

1. REFER TO TYPICAL PIER DETAIL 5/S-204 FOR MORE INFO.

NORTH TOWER FOUNDATION PLAN NOTES:

1. REFER TO GENERAL NOTES, KEYS & ABBREVIATIONS AND SPECIFICATIONS FOR ADDITIONAL INFO.
2. REFER TO OVERALL FOUNDATION PLAN SHEET S-100 FOR NOTES, UNO.
3. FOR MAT FOOTING PLAN DIMENSIONS REFER TO OVERALL FOUNDATION PLAN, DRAWING S-100.
4. "BP-1" INDICATES BASE PLATE. ALL ANCHOR RODS, NUTS AND WASHERS TO BE HOT DIPPED GALVANIZED. REFER TO DETAIL 3/S-501 FOR MORE INFO.
5. ALL STEEL COLUMNS ARE HSS8x8x5/8.
6. ALL EXPOSED CONCRETE TO BE RUBBED FINISHED, UNO.
7. TOP OF RAIL ELEVATION USED FOR NORTH TOWER IS 26.16'. THIS IS THE DATUM ELEVATION 20'-0". ALL ELEVATIONS ARE REFERENCED FROM OLD ELEVATION

REV.	DATE	REVISION DESCRIPTION	SHEET NO.

Filename: FD_MSH_STR_0027_0059_S-101.dgn

THE INFORMATION, INCLUDING ESTIMATED QUANTITIES OF WORK, SHOWN ON THESE SHEETS IS BASED ON LIMITED INVESTIGATIONS BY THE STATE AND IS IN NO WAY WARRANTED TO INDICATE THE CONDITIONS OF ACTUAL QUANTITIES OF WORK WHICH WILL BE REQUIRED.

Date Plotted: October 01, 2014

DESIGNER/DRAFTER: KR-M
CHECKED BY: MDD
SCALE AS NOTED

STATE OF CONNECTICUT
DEPARTMENT OF TRANSPORTATION

ENGINEER: BAKER ENGINEERING
APPROVED BY:
DATE:

PROJECT TITLE: SHORE LINE EAST RAILROAD STATIONS

TOWN: CLINTON

DRAWING TITLE: NORTH TOWER FOUNDATION PLAN

PROJECT NO. 310-0059
DRAWING NO. S-101
SHEET NO. 06.05

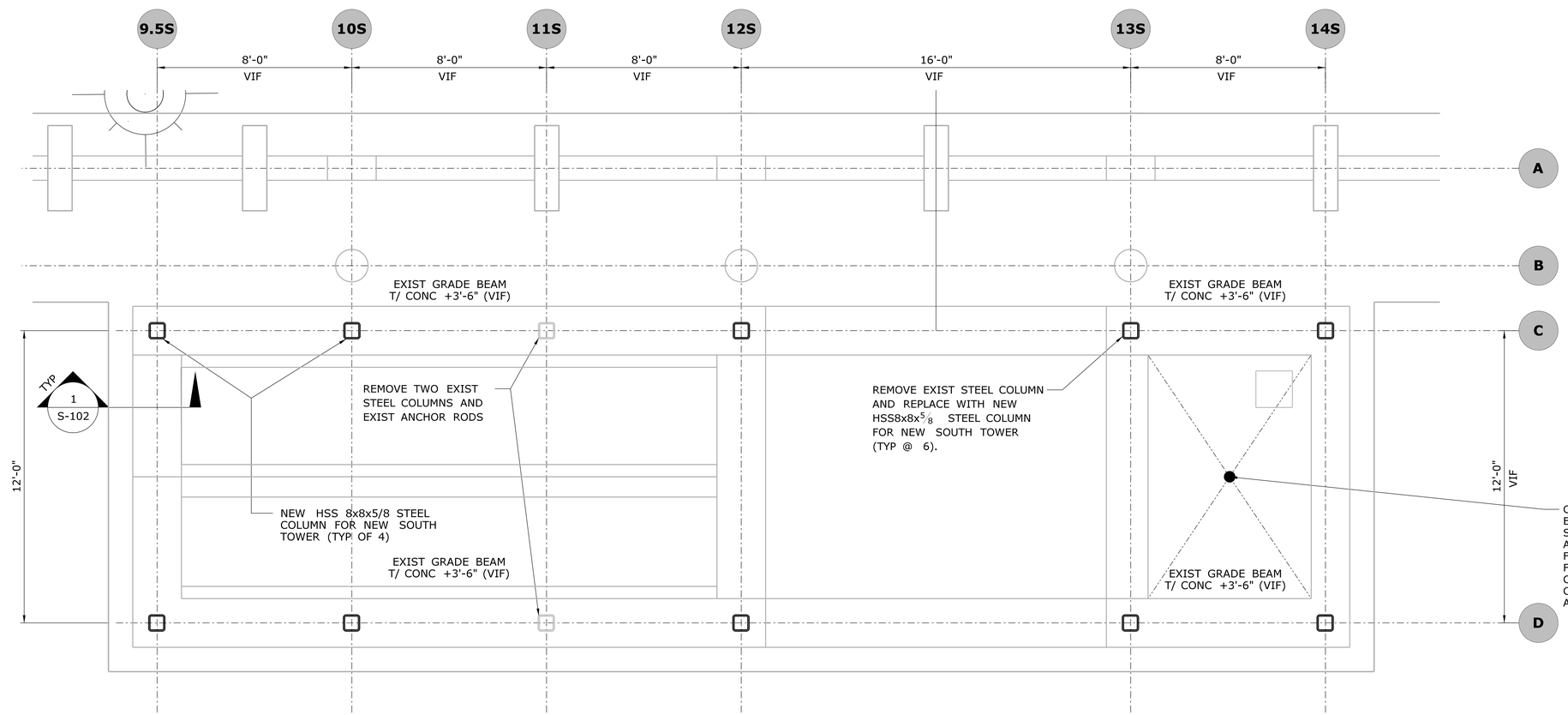

SOUTH TOWER FOUNDATION PLAN

SCALE: 3/8"=1'-0"

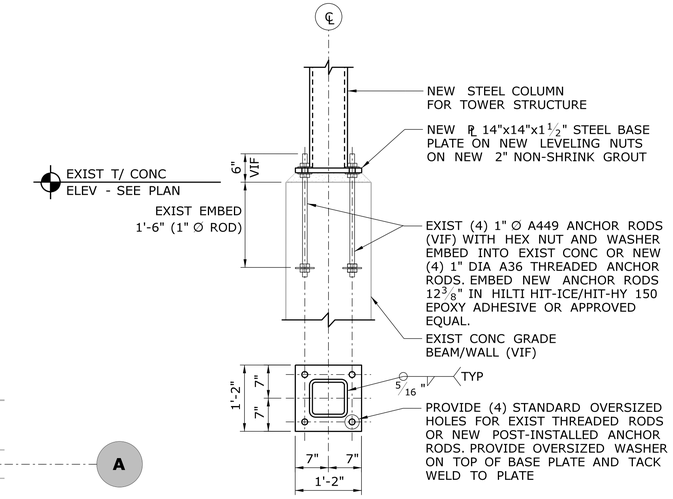

PLAN VIEW

NOTE:

1. ALL NEW STEEL NUTS, WASHERS, AND ANCHOR RODS TO BE GALV.
2. EXIST ANCHOR RODS ARE ON GRID LINES 12S, 13S, AND 14S. INSTALL NEW ANCHOR RODS AT GRID LINES 9.5S AND 10S.

TYP NEW STEEL COL CONN TO EXIST FND

SCALE: 3/4"=1'-0"

1
S-102

SOUTH TOWER FOUNDATION PLAN NOTES:

1. REFER TO GENERAL NOTES, KEYS & ABBREVIATIONS AND SPECIFICATIONS FOR ADDITIIONAL INFO.
2. REFER TO OVERALL FOUNDATION PLAN SHEET S-100 FOR NOTES, UON.
3. "BP-1" INDICATES BASE PLATE. ALL ANCHOR RODS, NUTS AND WASHERS TO BE HOT DIPPED GALVANIZED. REFER TO DETAIL 3/S-501 FOR MORE INFO.
4. ALL STEEL COLUMNS ARE HSS8x8x5/8.
5. SHADED COLUMN BUBBLES INDICATE EXIST COLUMN LINES.
6. TOP OF RAIL ELEVATION USED FOR SOUTH TOWER = +26.13'. THIS IS THE DATUM ELEVATION = 0'-0". ALL ELEVATIONS ARE REFERENCED FROM THIS ELEVATION.

REV.	DATE	REVISION DESCRIPTION	SHEET NO.

Filename: FD_MSH_STR_0027_0059_S-102.dgn

THE INFORMATION, INCLUDING ESTIMATED QUANTITIES OF WORK SHOWN ON THESE SHEETS IS BASED ON LIMITED INVESTIGATIONS BY THE STATE AND IS IN NO WAY WARRANTED TO INDICATE THE CONDITIONS OF ACTUAL QUANTITIES OF WORK WHICH WILL BE REQUIRED.

Date Plotted: October 01, 2014

DESIGNER/DRAFTER: KR-M

CHECKED BY: MDD

SCALE AS NOTED

STATE OF CONNECTICUT
DEPARTMENT OF TRANSPORTATION

ENGINEER: BAKER ENGINEERING

APPROVED BY:

DATE:

PROJECT TITLE:
SHORE LINE EAST
RAILROAD STATIONS

TOWN: CLINTON

DRAWING TITLE: SOUTH TOWER FOUNDATION PLAN

PROJECT NO. 310-0059

DRAWING NO. S-102

SHEET NO. 06.06

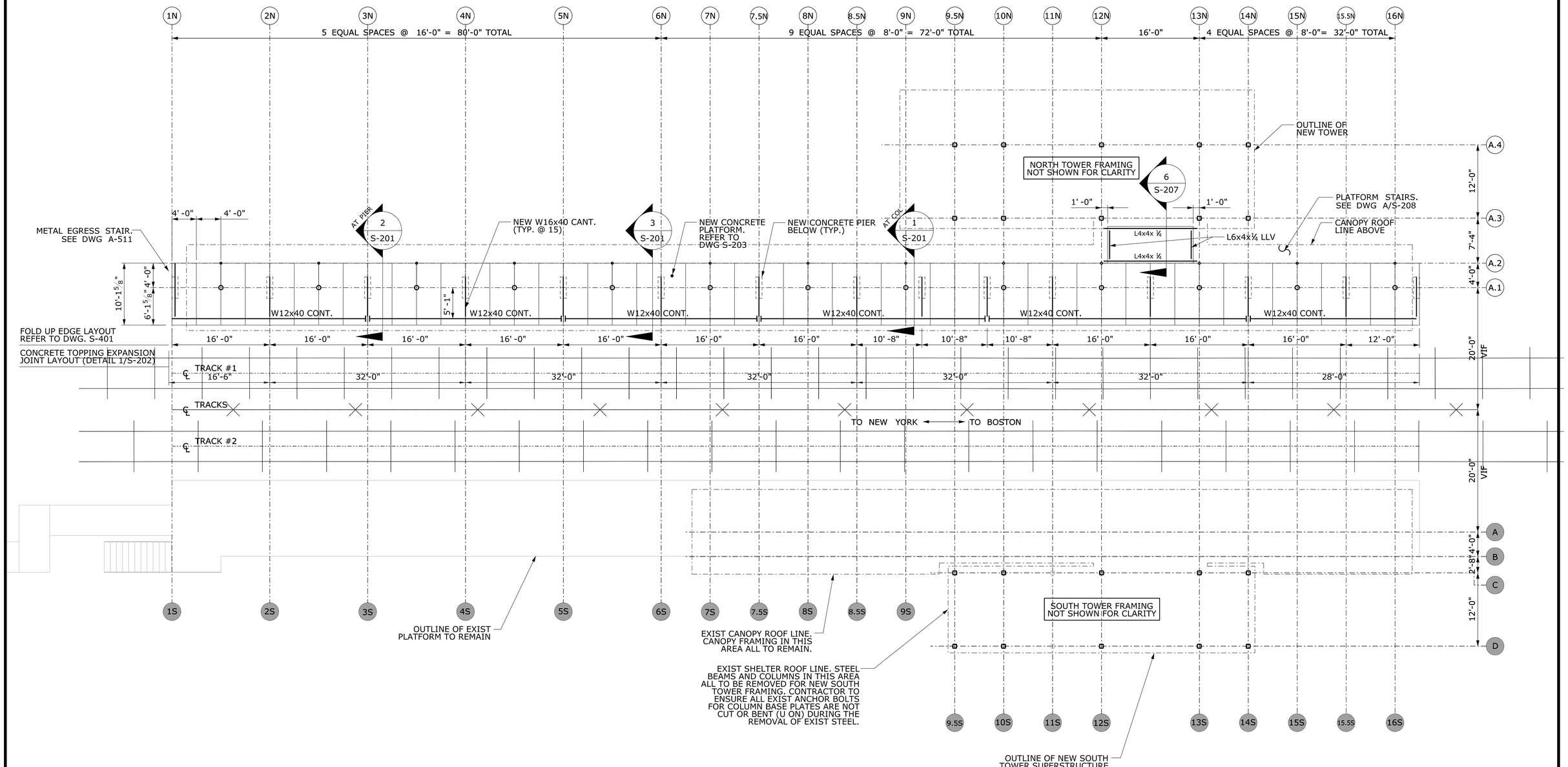

REV.	DATE	REVISION DESCRIPTION	SHEET NO.

Filename:

THE INFORMATION, INCLUDING ESTIMATED QUANTITIES OF WORK, SHOWN ON THESE SHEETS IS BASED ON LIMITED INVESTIGATIONS BY THE STATE AND IS IN NO WAY WARRANTED TO INDICATE THE CONDITIONS OF ACTUAL QUANTITIES OF WORK WHICH WILL BE REQUIRED.

Date Plotted: October 01, 2014

DESIGNER/DRAFTER:

CHECKED BY:

SCALE AS NOTED

STATE OF CONNECTICUT
DEPARTMENT OF TRANSPORTATION

ENGINEER: BAKER ENGINEERING

APPROVED BY:

DATE:

PROJECT TITLE:

SHORE LINE EAST RAILROAD STATIONS

TOWN:

CLINTON

DRAWING TITLE:

PLATFORM FRAMING PLAN

PROJECT NO. **310-0059**

DRAWING NO. **S-103**

SHEET NO. **06.07**

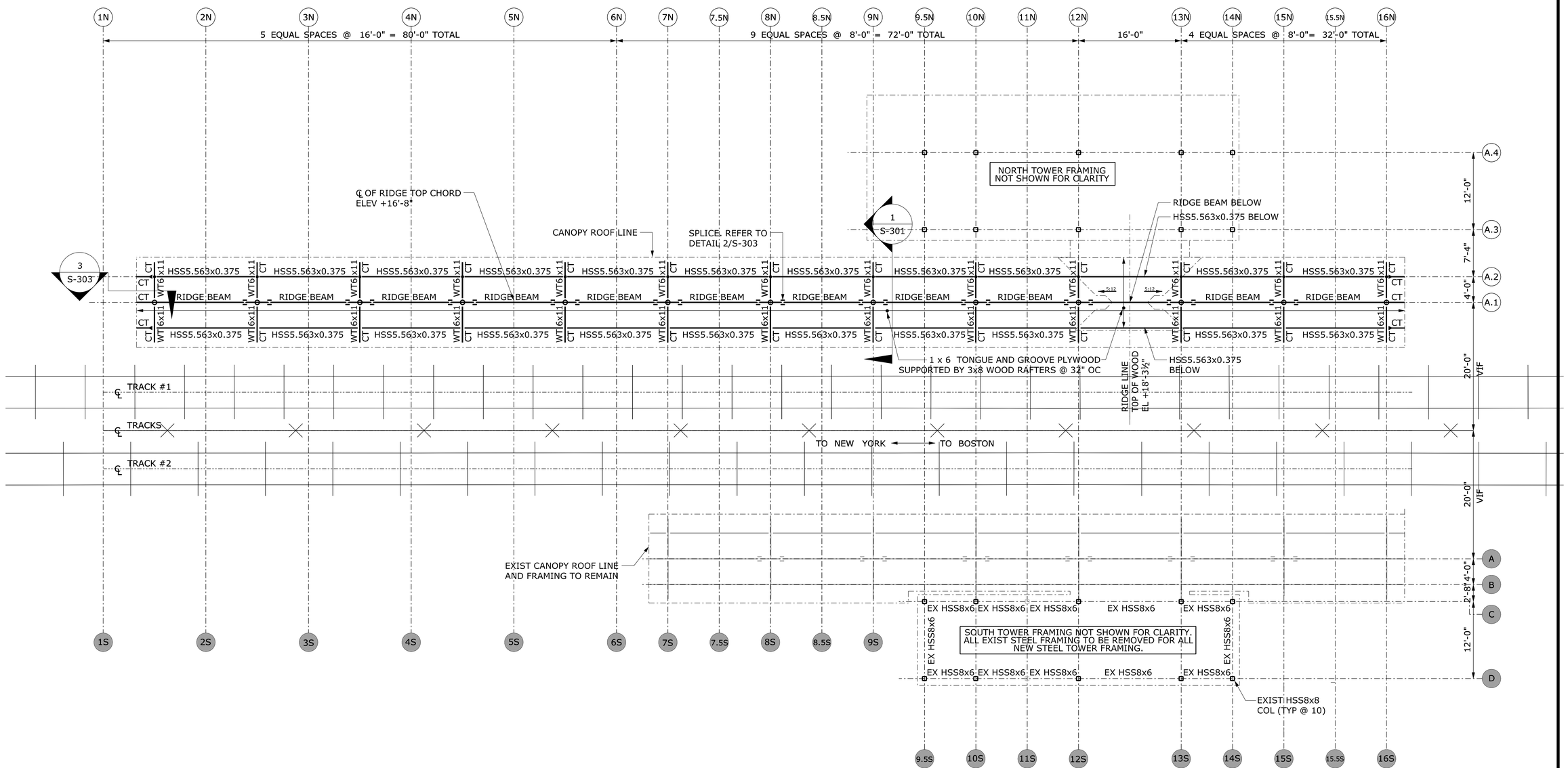

CANOPY FRAMING PLAN

SCALE: 1/8"=1'-0"

CANOPY FRAMING PLAN NOTES:

1. REFER TO GENERAL NOTES, KEYS & ABBREVATIONS AND SPECIFICATIONS FOR ADDITIONAL INFO.

REV.	DATE	REVISION DESCRIPTION	SHEET NO.

Filename: FD_MSH_STR_0027_0059_S-104.dgn

THE INFORMATION, INCLUDING ESTIMATED QUANTITIES OF WORK, SHOWN ON THESE SHEETS IS BASED ON LIMITED INVESTIGATIONS BY THE STATE AND IS IN NO WAY WARRANTED TO INDICATE THE CONDITIONS OF ACTUAL QUANTITIES OF WORK WHICH WILL BE REQUIRED.

Date Plotted: October 01, 2014

DESIGNER/DRAFTER: KR-M

CHECKED BY: MDD

SCALE AS NOTED

STATE OF CONNECTICUT
DEPARTMENT OF TRANSPORTATION

ENGINEER: BAKER ENGINEERING

APPROVED BY:

DATE:

PROJECT TITLE:

SHORE LINE EAST RAILROAD STATIONS

TOWN: CLINTON

DRAWING TITLE: CANOPY FRAMING PLAN

PROJECT NO. 310-0059

DRAWING NO. S-104

SHEET NO. 06.08

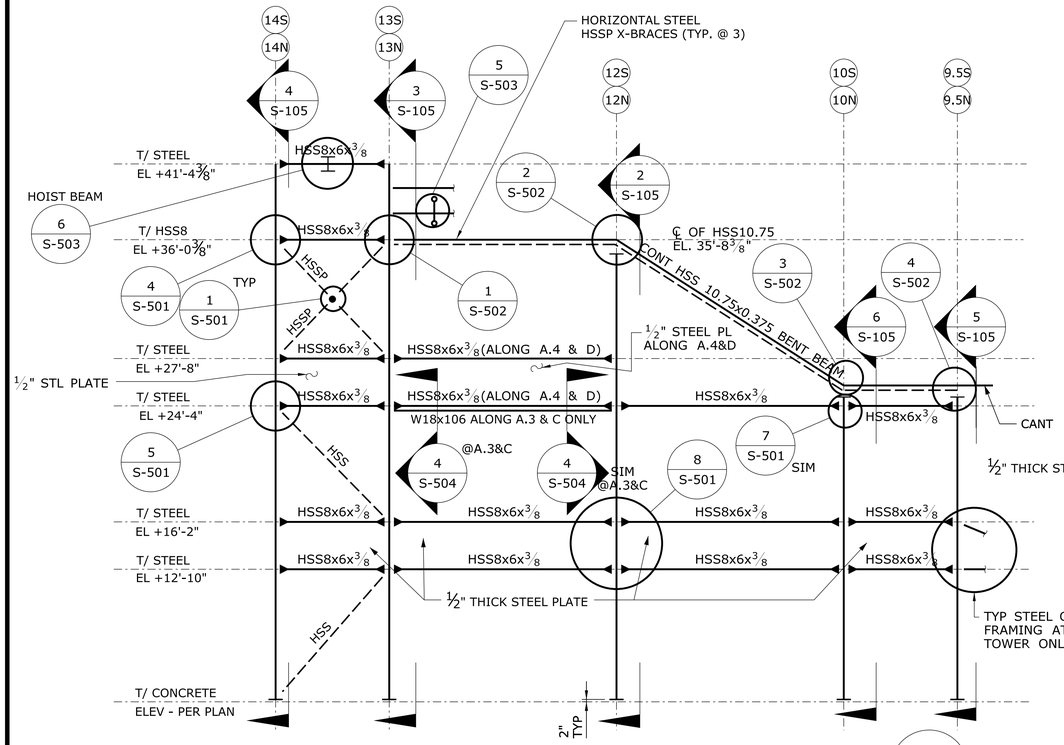

TOWER FRAME ELEVATION ALONG LONGS "A.3", "A.4", "C' AND "D" 1 S-105

SCALE: 3/16" = 1'-0"

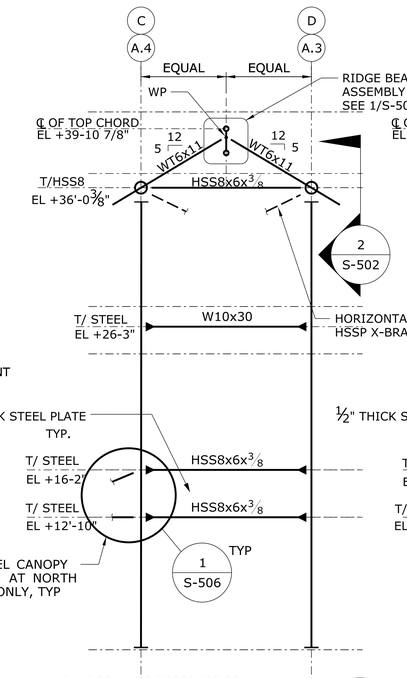

FRAME ELEVATION ALONG LINE 12N & 12S 2 S-105

SCALE: 3/16" = 1'-0"

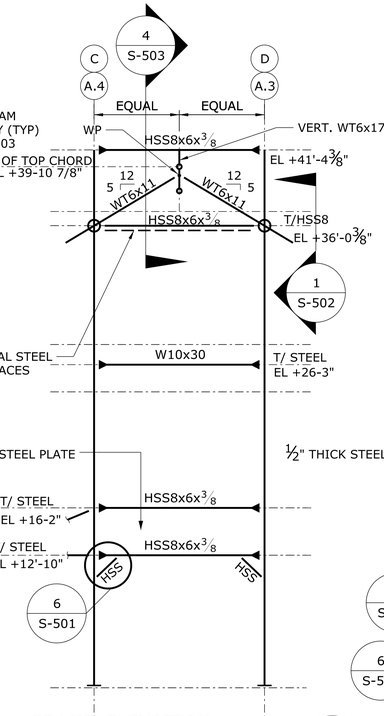

FRAME ELEVATION ALONG LINE 13N & 13S 3 S-105

SCALE: 3/16" = 1'-0"

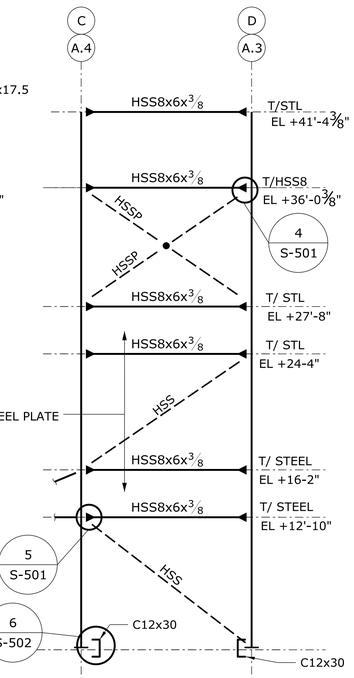

FRAME ELEVATION ALONG LINE 14N & 14S 4 S-105

SCALE: 3/16" = 1'-0"

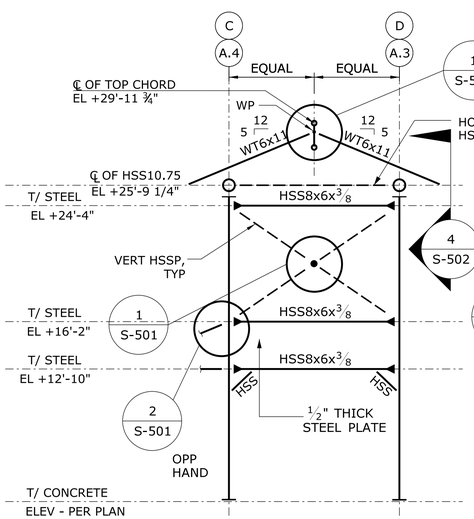

FRAME ELEVATION ALONG LINE 9.5N & 9.5S 5 S-105

SCALE: 3/16" = 1'-0"

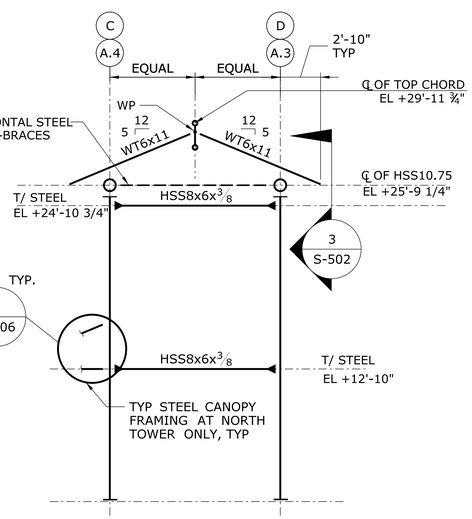

FRAME ELEVATION ALONG LINE 10N & 10S 6 S-105

SCALE: 3/16" = 1'-0"

LATERAL FRAME NOTES:

1. ALL ELEVATIONS ARE REFERENCED FROM DATUM ELEVATION NOTED ON S-101 AND S-102.
2. REFER TO TOWER FOUNDATION PLAN, DWG S-101 AND S-102 FOR TOP OF CONCRETE PIER ELEVATIONS WHICH VARY. TOP OF PIER ELEVATION CORRESPONDS TO THE TOP OF CONCRETE ELEVATION ON THIS DWG.
3. ALL CONNECTIONS, SPLICES AND ERECTION PIECES SHALL BE DESIGNED BY THE FABRICATOR'S ENGINEER REGISTERED IN THE PROJECT'S JURISDICTION. CALCULATIONS AND SHOP DRAWINGS SHALL BE SUBMITTED BEARING THE ENGINEER'S SEAL AND SIGNATURE.
4. DESIGN ALL MOMENT CONNECTIONS FOR THE WORST CASE MAXIMUM CAPACITY OF THE BEAM OR COLUMN SECTION PER AISC MANUAL OF STEEL CONSTRUCTION.
5. SUBMIT ALL CONNECTION DESIGN CALCULATIONS FOR REVIEW AND APPROVAL PRIOR TO OR ALONG WITH STEEL SHOP DRAWINGS.
6. SEE GENERAL NOTES AND SPECIFICATIONS FOR MORE INFORMATION.
7. ALL COLUMNS ARE HSS 8x8x5/8, UNO.
8. ALL HSS 8x6 BEAMS ARE LONG SIDE VERT., UNO.
9. DIAGONAL BRACING NOTED AS HSS IS HSS 4x4x3/8, UNO. AXIAL LOAD +/- 40 KIPS (LRFD).
10. DIAGONAL AND HORIZONTAL BRACING NOTED AS HSSP IS HSS 3.5x0.216. AXIAL LOAD +/- 15 KIPS (LRFD).
11. REFER TO S-106 FOR FRAMING PLANS.

REV.	DATE	REVISION DESCRIPTION	SHEET NO.

Filename: FD_MSH_STR_0027_0048_S-105.dgn

THE INFORMATION, INCLUDING ESTIMATED QUANTITIES OF WORK, SHOWN ON THESE SHEETS IS BASED ON LIMITED INVESTIGATIONS BY THE STATE AND IS IN NO WAY WARRANTED TO INDICATE THE CONDITIONS OF ACTUAL QUANTITIES OF WORK WHICH WILL BE REQUIRED.

Date Plotted: October 01, 2014

DESIGNER/DRAFTER: KR-M

CHECKED BY: MDD

SCALE AS NOTED

STATE OF CONNECTICUT
DEPARTMENT OF TRANSPORTATION

ENGINEER: BAKER ENGINEERING

APPROVED BY: DATE:

PROJECT TITLE: SHORE LINE EAST RAILROAD STATIONS

TOWN: CLINTON

DRAWING TITLE: NORTH & SOUTH TOWER FRAME ELEVATIONS

PROJECT NO. 310-0059

DRAWING NO. S-105

SHEET NO. 06.09

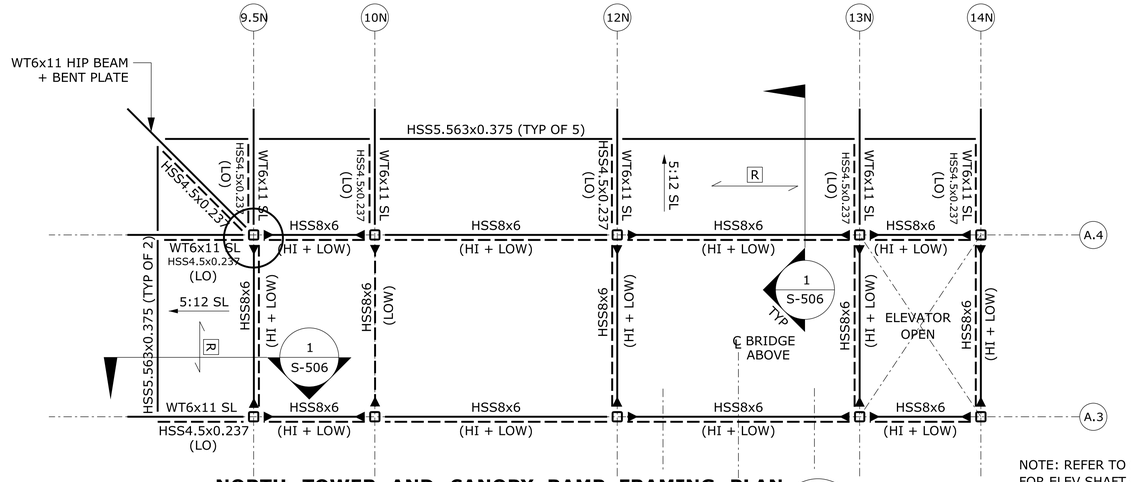

NOTE: REFER TO 6/S-106
FOR ELEV SHAFT STEEL

NORTH TOWER AND CANOPY RAMP FRAMING PLAN AT T/STEEL EL +16'-2" (HI) & +12'-10" (LO) — **1 / S-106**

SCALE: 1'½" = 1'-0"

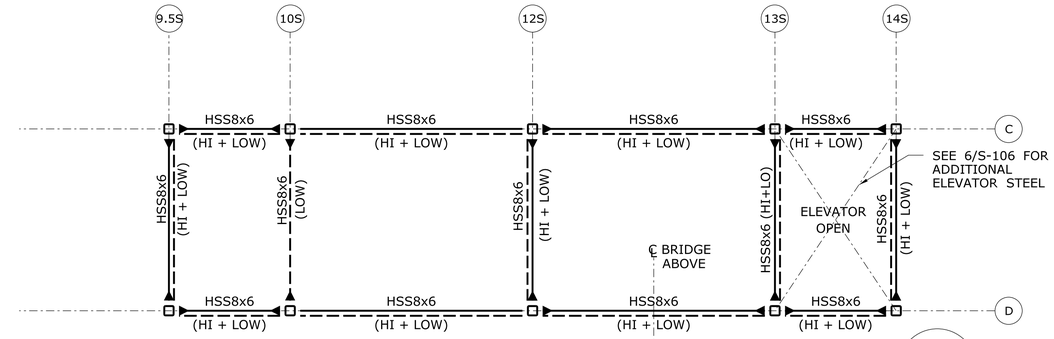

SOUTH TOWER FRAMING PLAN AT TO.STEEL EL +16'-2" (HI) & +12'-10" (LO) — **2 / S-106**

SCALE: 1'½" = 1'-0"

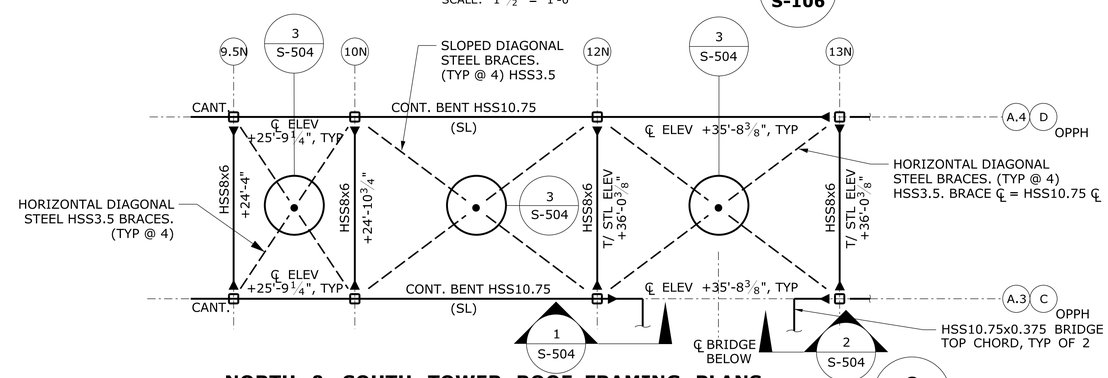

NORTH & SOUTH TOWER ROOF FRAMING PLANS — **3 / S-106**

SCALE: 1'½" = 1'-0"

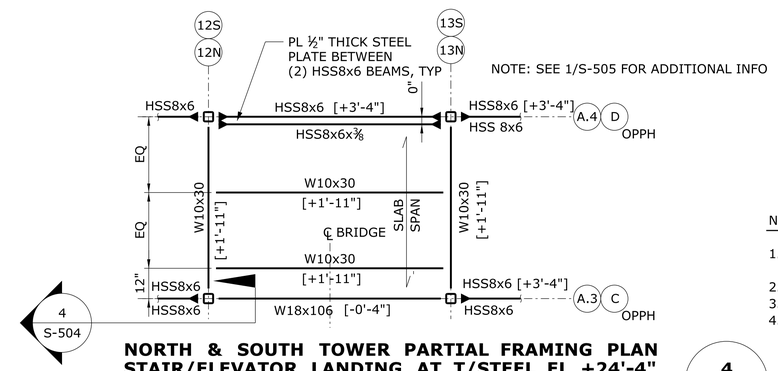

NORTH & SOUTH TOWER PARTIAL FRAMING PLAN STAIR/ELEVATOR LANDING AT T/STEEL EL +24'-4" — **4 / S-106**

SCALE: 1½"=1'-0"

NOTES:

1. ALL ELEVATIONS ARE REFERENCED FROM DATUM NOTED ON S-101 AND S-102.
2. ALL COLUMNS ARE HSS8x8x5/8, UNO.
3. SEE S-105 FOR ELEVATIONS.
4. R INDICATES 1 x 6 T&G PLYWOOD SPAN DIRECTION SUPPORTED BY 3x8 WOOD RAFTERS @ 32" OC. PROVIDE WOOD RAFTERS @16" OC MAX @ HIP ROOF ON 1/S-106.

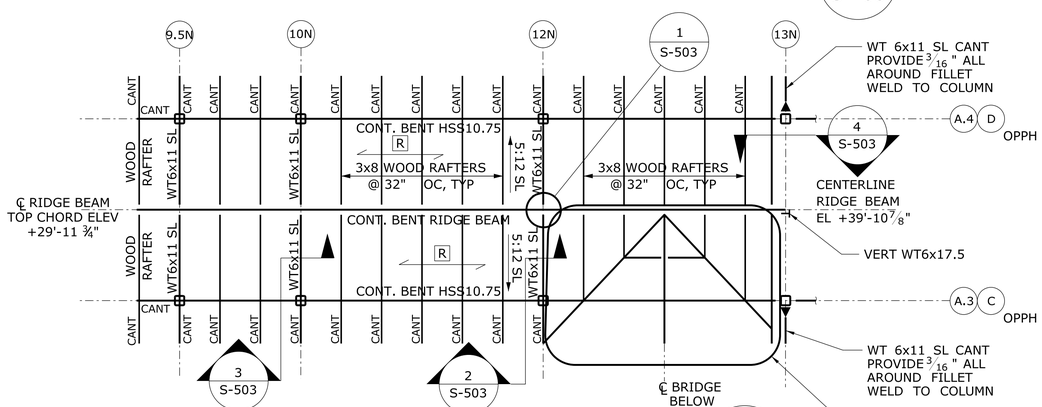

NORTH & SOUTH TOWER ROOF FRAMING PLANS — **5 / S-106**

SCALE: 1'½" = 1'-0"

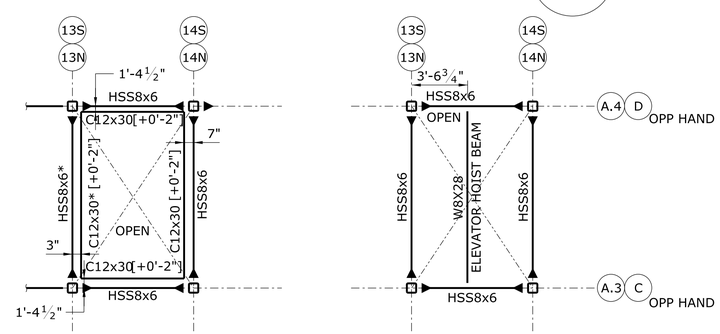

NOTE:

1. T/ STEEL AT EL +12'-10", +24'-4", +36'-0⅜"
2. * INDICATES C12 OCCURS ONLY AT +24'-4" LEVEL AND HSS8x6 DOES NOT OCCUR AT +24'-4" LEVEL.

NOTE:

1. T/ STEEL AT EL +41'-4⅜" CONTRACTOR TO COORDINATE WITH
2. ELEVATOR MANUFACTURER LOCATION OF ELEVATOR GUIDES AND HOIST BEAM.
3. SEE ARCHITECTURAL FOR ELEVATOR ROOF CONSTRUCTION.

NORTH & SOUTH TOWER PARTIAL FRAMING PLANS AT ELEVATOR SHAFT — **6 / S-106**

SCALE: 1½"=1'-0"

REV.	DATE	REVISION DESCRIPTION	SHEET NO.

Filename: FD_MSH_STR_0027_0048_S-105.dgn

THE INFORMATION, INCLUDING ESTIMATED QUANTITIES OF WORK, SHOWN ON THESE SHEETS IS BASED ON LIMITED INVESTIGATIONS BY THE STATE AND IS IN NO WAY WARRANTED TO INDICATE THE CONDITIONS OF ACTUAL QUANTITIES OF WORK WHICH WILL BE REQUIRED.

Date Plotted: October 01, 2014

DESIGNER/DRAFTER: -
CHECKED BY: -
SCALE AS NOTED

STATE OF CONNECTICUT
DEPARTMENT OF TRANSPORTATION

ENGINEER: BAKER ENGINEERING
APPROVED BY:
DATE:

PROJECT TITLE: SHORE LINE EAST RAILROAD STATIONS

TOWN: CLINTON

DRAWING TITLE: TOWER FRAMING PLANS

PROJECT NO. 310-0059
DRAWING NO. S-106
SHEET NO. 06.10

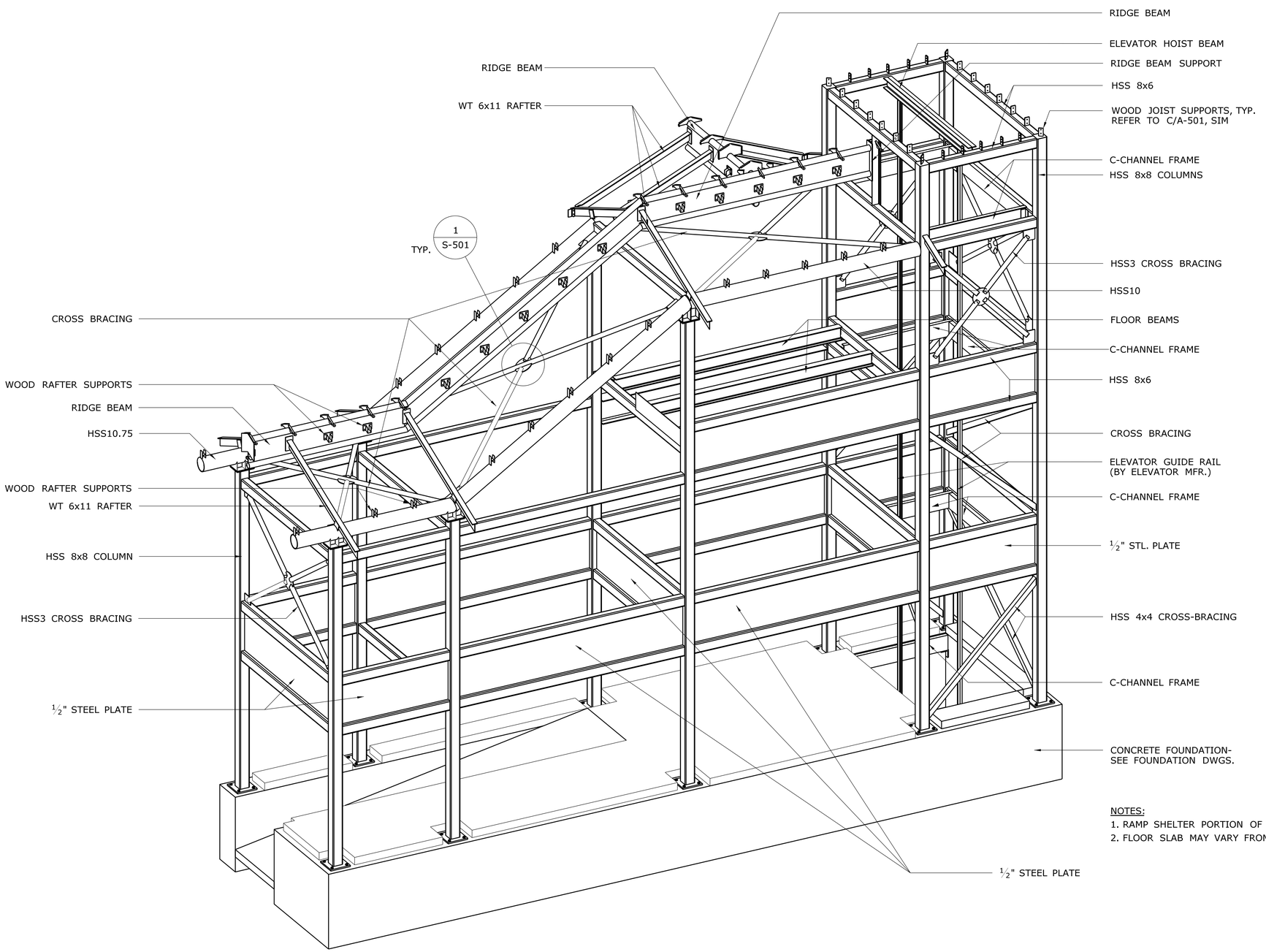

NOTES:

1. RAMP SHELTER PORTION OF TOWER SUPER STRUCTURE NOT SHOWN FOR CLARITY.
2. FLOOR SLAB MAY VARY FROM ACTUAL CONDITION.

REV.	DATE	REVISION DESCRIPTION	SHEET NO.

Filename: FD_MSH_STR_0027_0048_S-107.dgn

THE INFORMATION, INCLUDING ESTIMATED QUANTITIES OF WORK, SHOWN ON THESE SHEETS IS BASED ON LIMITED INVESTIGATIONS BY THE STATE AND IS IN NO WAY WARRANTED TO INDICATE THE CONDITIONS OF ACTUAL QUANTITIES OF WORK WHICH WILL BE REQUIRED.

Date Plotted: October 01, 2014

DESIGNER/DRAFTER: KR-M

CHECKED BY: MDD

SCALE AS NOTED

STATE OF CONNECTICUT
DEPARTMENT OF TRANSPORTATION

ENGINEER: BAKER ENGINEERING

APPROVED BY:

DATE:

PROJECT TITLE:

SHORE LINE EAST RAILROAD STATIONS

TOWN: **CLINTON**

DRAWING TITLE: **STAIR TOWER ISOMETRIC DIAGRAM**

PROJECT NO. **310-0059**

DRAWING NO. **S-107**

SHEET NO. **06.11**

NOTES:

1. SEE SURVEY PLAN FOR INFORMATION REGARDING ALL EXISTING UTILITY LINES (FIBER OPTIC CABLES, AMTRAK POWER AND SIGNAL LINES, ETC.) UTILITY OWNERS SHALL BE CONTACTED A MINUMUM OF 14 DAYS IN ADVANCE OF SHEET PILING INSTALLATION OR EXCAVATION AND BE GRANTED ACCESS TO THE WORK AREA FOR OVERSIGHT OF THE WORK. DRIVING OF SHEETING MAY NOT COMMENCE UNTIL THE UTILITY OWNER AND THE ENGINEER ARE SATISFIED THAT THE WORK WILL NOT ADVERSELY AFFECT THE UTILITY.
2. THE CONTRACTOR SHALL PROTECT ALL REMAINING EXISTING UTILITIES FROM DAMAGE DURING CONSTRUCTION.
3. SHEET PILING INSTALLATION SHALL BE IN ACCORDANCE WITH AMTRAK STANDARD ENGINEERING PRACTICES "REQUIREMENTS FOR TEMPORARY SHEETING AND SHORING TO SUPPORT AMTRAK TRACKS", AND WITH THE SPECIAL PROVISIONS "TEMPORARY SHEET PILING (RAILROAD)" AND "SHEET PILING MATERIAL LEFT IN PLACE (RAILROAD)".
4. HAND DIG EXPLORATORY TRENCHES IN THE AREA OF FIBER OPTIC CABLES AND OTHER UTILITIES PRIOR TO INSTALLING SHEET PILING.
5. CUT OFF SHEET PILING AT SAME ELEVATION AS TOP OF TIE DURING CONSTRUCTION. AFTER CONSTRUCTION IS COMPLETED, SHEET PILING SHALL BE CUT OFF BELOW GRADE AND LEFT IN PLACE, IN ACCORDANCE WITH AMTRAK REQUIREMENTS.
6. CONTRACTOR SHALL MAINTAIN A MINIMUM DEPTH OF 3'-6" FROM FINISHED GRADE TO BOTTOM OF FOOTING.
7. SEE CIVIL GRADING PLAN FOR FINAL GRADE AT PLATFORM LOCATION.
8. THE CONTRACTOR SHALL OBTAIN OUTSIDE RAIL ELEVATION AT ALL COLUMN LINE LOCATIONS. ESTABLISHED TOP OF PLATFORM ELEVATIONS SHALL BE SUBMITTED TO THE ENGINEER FOR APPROVAL. CONSTRUCTION WILL NOT BE PERMITTED WITHOUT PRIOR APPROVAL OF THE ENGINEER.
9. REFER TO ARCHITECTURAL DRAWINGS FOR APPROXIMATE TOP OF RAIL ELEVATIONS ALONG PLATFORM.
10. THE 2" CONCRETE OVERLAY SHALL BE REINFORCED WITH 6x6 - W2.9 X W2.9 WWF WITH A CLEAR COVER OF 1½"

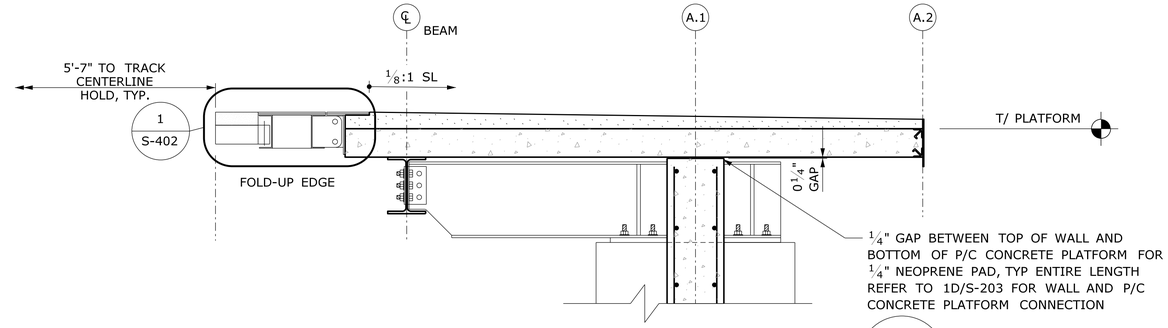

SECTION AT WALL 3 / S-103

SCALE: 3/4"=1'-0"

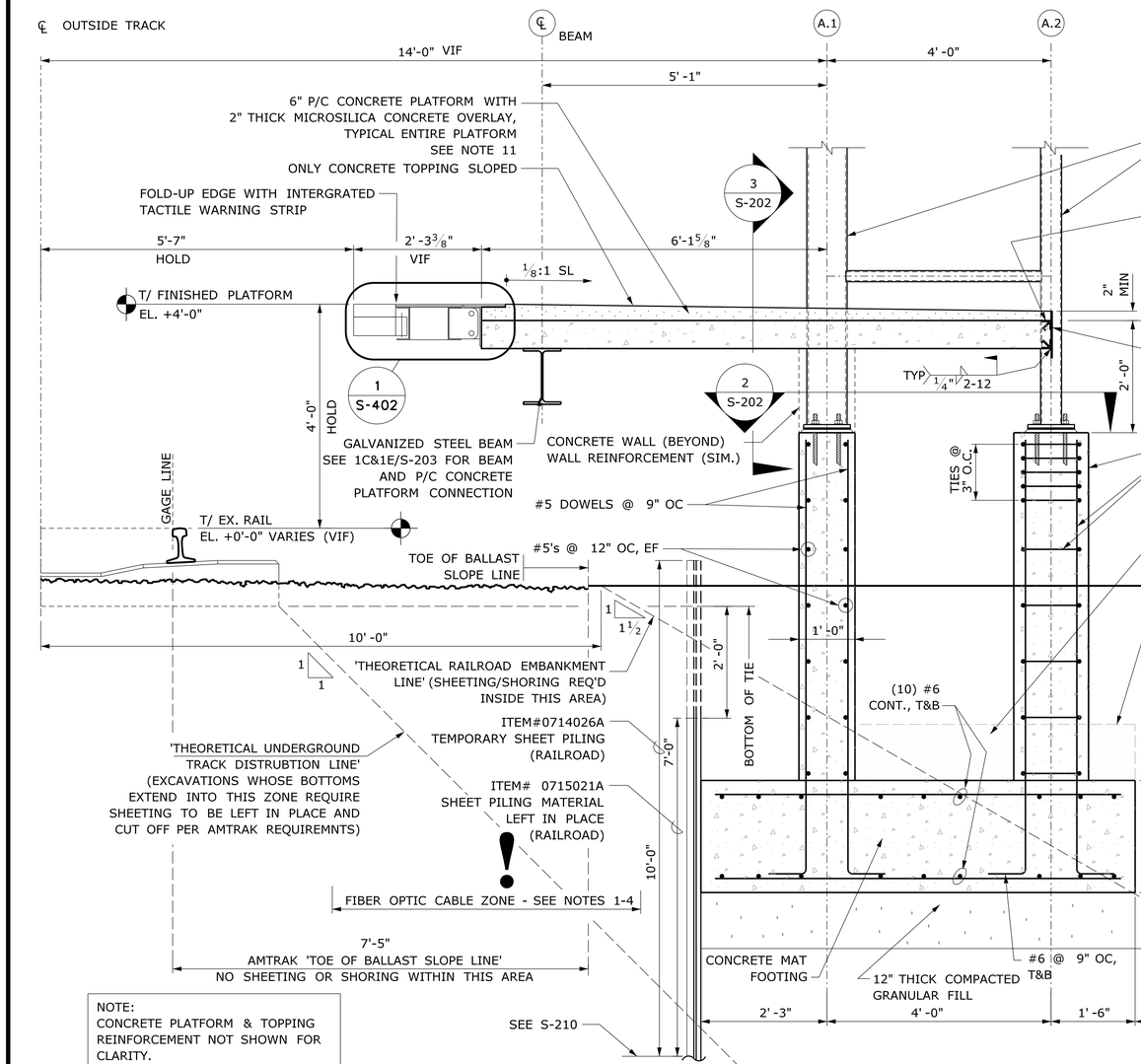

NOTE:
CONCRETE PLATFORM & TOPPING REINFORCEMENT NOT SHOWN FOR CLARITY.

SECTION AT COLUMN 1 / S-103 | 1 / S-100

SCALE: N.T.S.

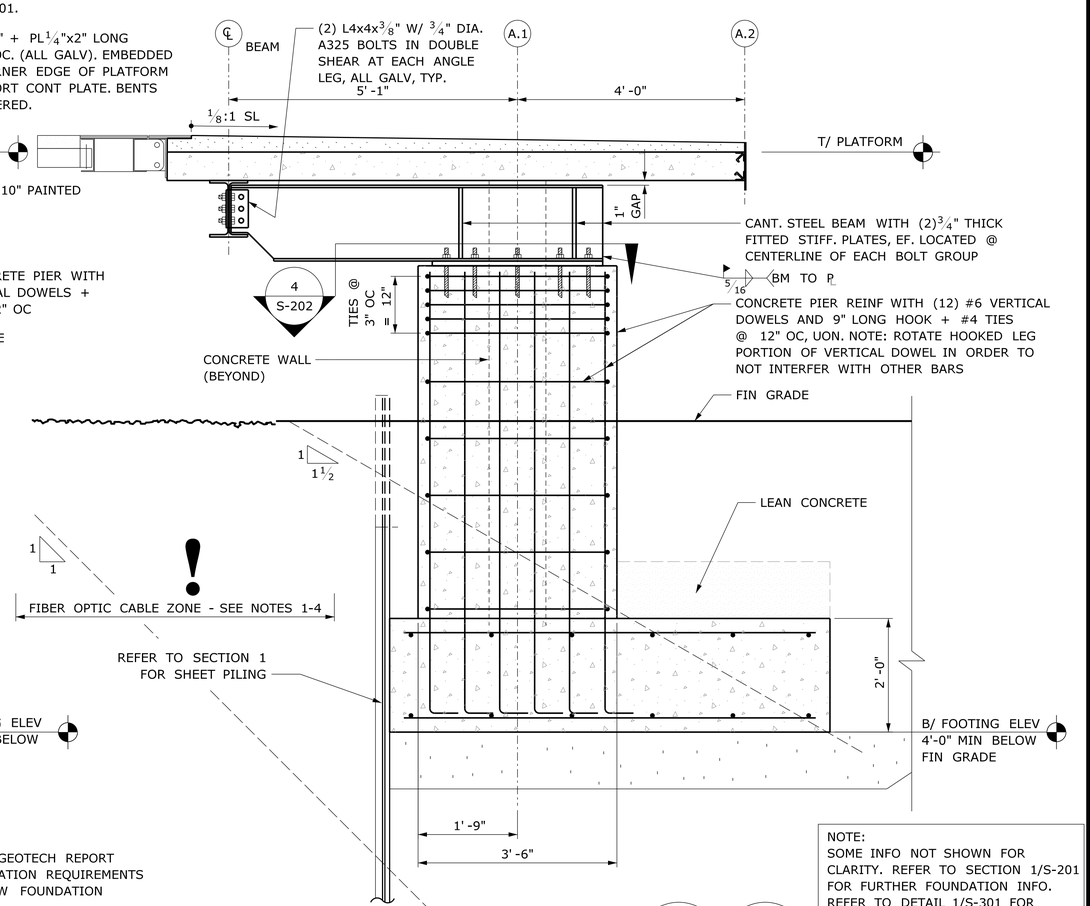

NOTE:
SOME INFO NOT SHOWN FOR CLARITY. REFER TO SECTION 1/S-201 FOR FURTHER FOUNDATION INFO. REFER TO DETAIL 1/S-301 FOR FOR CANOPY STEEL FRAMING

SECTION AT BEAM 2 / S-103 | 2 / S-100

SCALE: N.T.S.

REV.	DATE	REVISION DESCRIPTION	SHEET NO.

Filename: FD_MSH_STR_0027_0048_S-201.dgn

THE INFORMATION, INCLUDING ESTIMATED QUANTITIES OF WORK, SHOWN ON THESE SHEETS IS BASED ON LIMITED INVESTIGATIONS BY THE STATE AND IS IN NO WAY WARRANTED TO INDICATE THE CONDITIONS OF ACTUAL QUANTITIES OF WORK WHICH WILL BE REQUIRED.

Date Plotted: October 01, 2014

DESIGNER/DRAFTER: KR-M
CHECKED BY: MDD
SCALE AS NOTED

STATE OF CONNECTICUT
DEPARTMENT OF TRANSPORTATION

ENGINEER: BAKER ENGINEERING
APPROVED BY: DATE:

PROJECT TITLE: SHORE LINE EAST RAILROAD STATIONS

TOWN: CLINTON

DRAWING TITLE: NEW PLATFORM SECTIONS & DETAILS

PROJECT NO. 310-0059
DRAWING NO. S-201
SHEET NO. 06.12

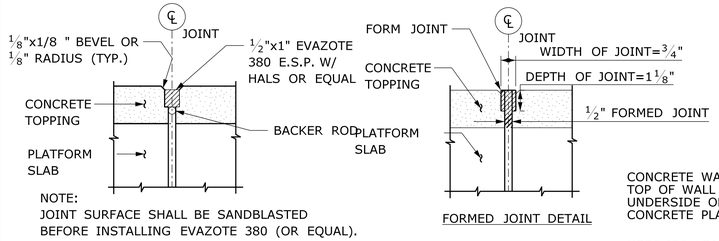

TYP CONCRETE TOPPING EXPANSION JOINT DETAILS

SCALE: NTS

1 / S-202

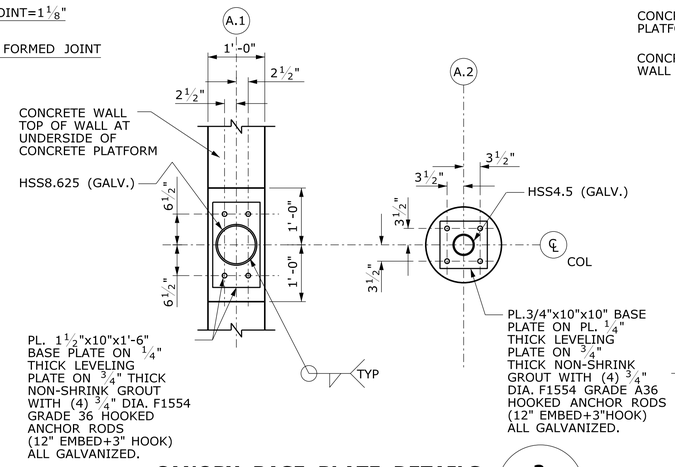

CANOPY BASE PLATE DETAILS

SCALE: NTS

2 / S-202

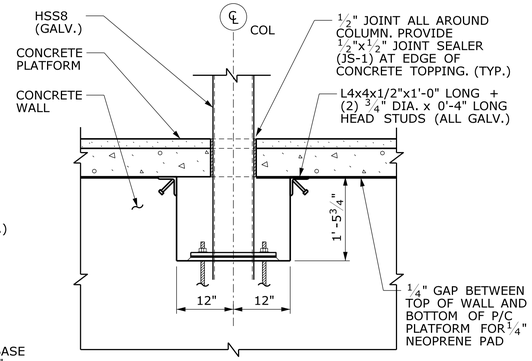

CANOPY BASE PLATE/ TOP OF WALL DETAIL

SCALE: NTS

3 / S-202

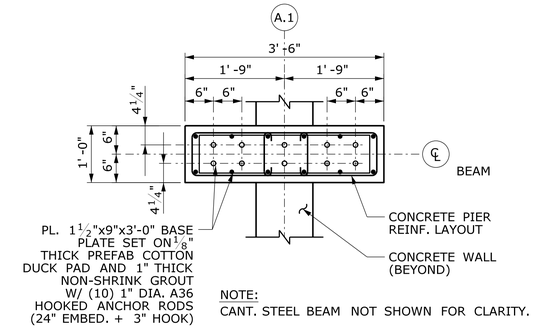

CONCRETE PIER LAYOUT PLAN DETAIL

SCALE: NTS

4 / S-202

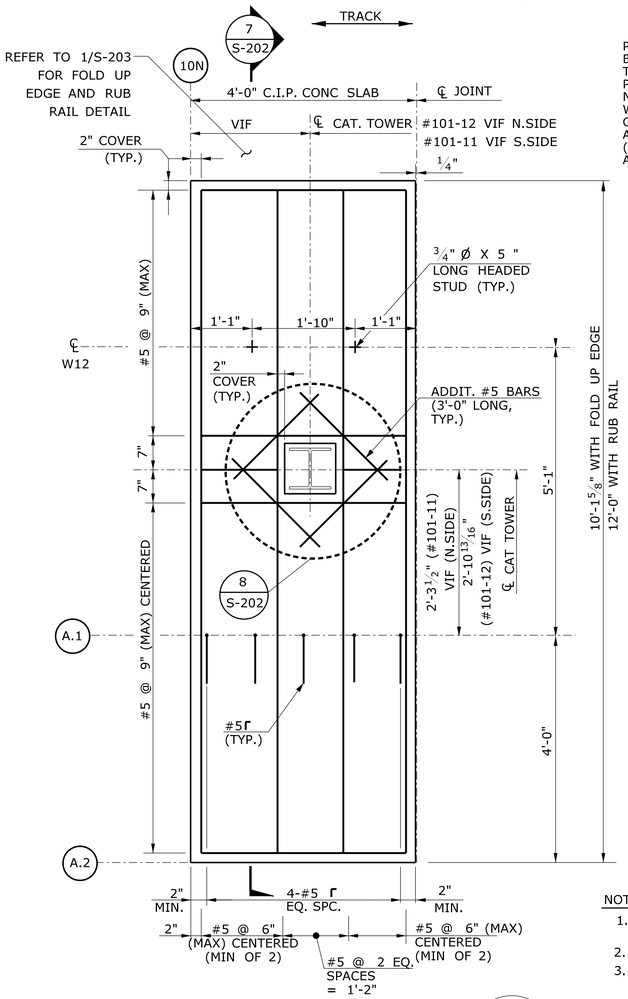

CIP CONCRETE SLAB REINF PLAN

SCALE: NTS

6 / S-104

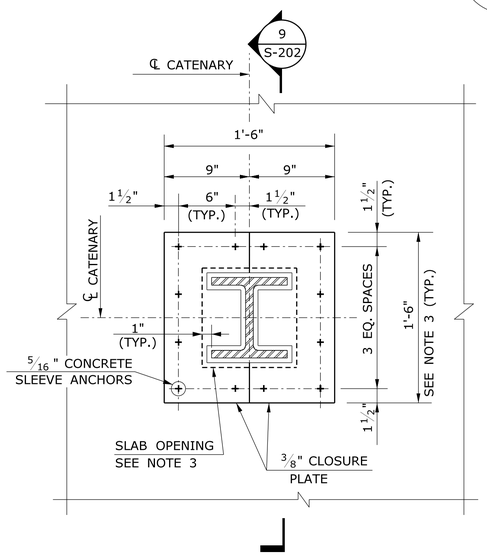

CLOSURE PLATE FOR CATENARY TOWERS

SCALE: NTS

8 / S-202

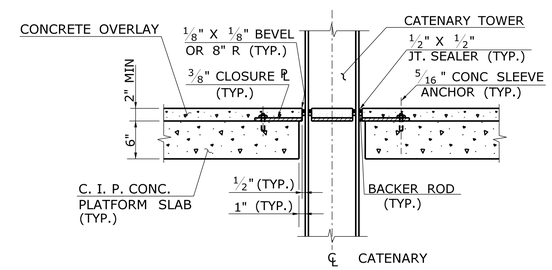

CLOSURE PLATE SECTION

SCALE: NTS

9 / S-202

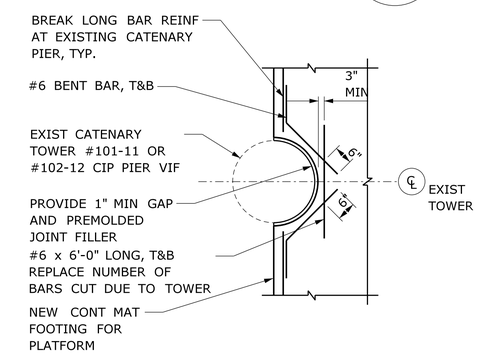

PLAN DETAIL AT EXIST CANTENARY TOWER THRU MAT FOUNDATION

SCALE: 1/2"=1'-0"

5 / S-202

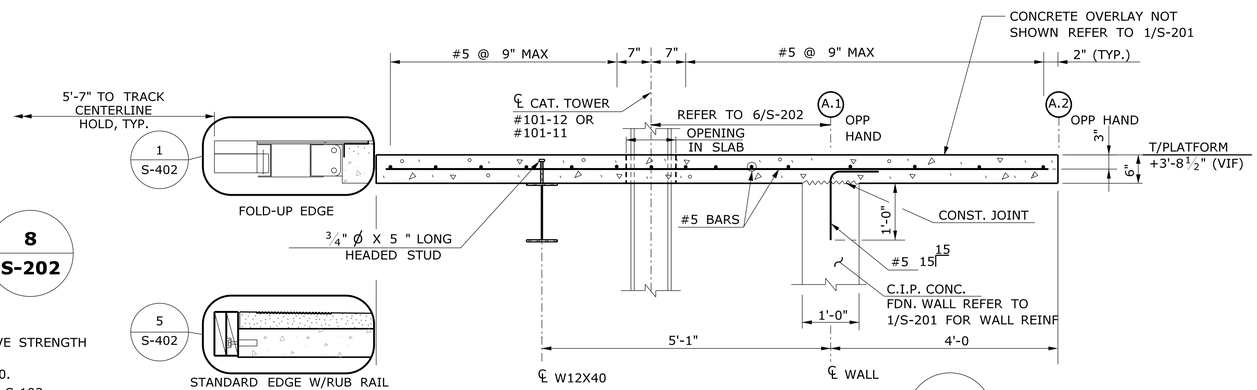

CIP CONC SLAB REINF SECTION

SCALE: 3/4" = 1'-0"

7 / S-202

NOTES:

1. CONCRETE FOR CAST-IN-PLACE SLAB SHALL HAVE MINIMUM COMPRESSIVE STRENGTH f'c = 4000 psi AT 28 DAYS.
2. ALL REINFORCING BARS SHALL BE EPOXY COATED, ASTM A615, GRADE 60.
3. FOR APPROXIMATE LOCATION OF CATENARY TOWERS, SEE DWG. S-100 & S-103. LOCATION AND DIMENSIONS OF EXISTING CATENARY TOWER FOUNDATIONS TO BE VERIFIED BY CONTRACTOR FIELD MEASURMENTS. DIMENSIONS OF PLATFORM SLAB OPENINGS SHALL BE DETERMINED BY CONTRACTOR FIELD MEASURMENTS AND APPROVED BY THE ENGINEER. CONSTRUCTION WILL NOT BE PERMITTED WITHOUT PRIOR APPROVAL OF THE ENGINEER.

REV.	DATE	REVISION DESCRIPTION	SHEET NO.

Filename: FD_MSH_STR_0027_0048_S-202.dgn

THE INFORMATION, INCLUDING ESTIMATED QUANTITIES OF WORK, SHOWN ON THESE SHEETS IS BASED ON LIMITED INVESTIGATIONS BY THE STATE AND IS IN NO WAY WARRANTED TO INDICATE THE CONDITIONS OF ACTUAL QUANTITIES OF WORK WHICH WILL BE REQUIRED.

Date Plotted: October 01, 2014

DESIGNER/DRAFTER: KR-M
CHECKED BY: MDD
SCALE AS NOTED

STATE OF CONNECTICUT
DEPARTMENT OF TRANSPORTATION

ENGINEER: BAKER ENGINEERING
APPROVED BY:
DATE:

PROJECT TITLE: SHORE LINE EAST RAILROAD STATIONS

TOWN: CLINTON

DRAWING TITLE: PLATFORM SECTIONS & DETAILS

PROJECT NO. 310-0059
DRAWING NO. S-202
SHEET NO. 06.13

NOTES:

1. CONCRETE FOR PRESTRESSED PRECAST SLAB SHALL HAVE MINIMUM COMPRESSIVE STRENGTH REQUIREMENT AS FOLLOWS.

   AT 28 DAYS fc' = 6500 psi
   AT TRANSFER fci' = 4000 psi

2. PRESTRESSING STRANDS SHALL CONFORM TO THE REQUIREMENTS OF ASTM A416, LOW RELAXATION GRADE 270. JACKING TENSION PER STRAND SHALL BE 17.21 KIPS. TOTAL WORKING PRESTRESS FORCE PER STRAND AFTER ALL LOSSES SHALL NOT BE LESS THAN 15.75 KIPS.

3. PRESTRESSING STRANDS SHALL BE PLACED AT THE CENTER OF SLAB.

4. DRILLING HOLES IN THE PRESTRESSED SLAB, EXCEPT FOR INSTALLATION OF PLATFORM RAILING OR USE OF POWER ACTUATED TOOLS WILL NOT BE PERMITTED.

5. LOCATION AND DETAILS OF LIFTING DEVICES SHALL BE SHOWN ON THE SHOP DRAWINGS FOR APPROVAL. LIFTING HOOKS IN THE SLAB MAY BE PERMITTED IF PROPERLY BLOCKED-OUT AND FINISHED-OFF.

6. CONCRETE FOR PRESTRESSED SLABS SHALL CONTAIN CALCIUM NITRITE @ 4 GAL. PER CUBIC YARD OF A 30 PERCENT SOLID SOLUTION AND MICROSILLICA @ 7.5 PERCENT BY WEIGHT OF CEMENT. SEE SPECIFICATIONS FOR ADDITIONAL INFORMATION.

7. IN HANDLING, THE SLAB SECTIONS MUST BE MAINTAINED IN A HORIZONTAL POSITION AT ALL TIMES.

8. FOR FINISHES, SEE SPECIFICATIONS.

9. EVA FOAM TO BE INSTALLED WITH THE 11 #4 DIMENSION COMPRESSED HORIZONTALLY IN THE 3 #4 JOINT OPENING. THE 1" DIMENSION OF THE FOAM IS TO BE VERTICAL.

10. CONTRACTOR TO COORINDATE W/ARCH DWGS LOCATION OF ANY MISC ITEMS (IE. LIGHT POLES, BENCH SEATING, SIGN SUPPORTS) AND ANCHORAGE LOCATIONS ON SHOP DWGS.

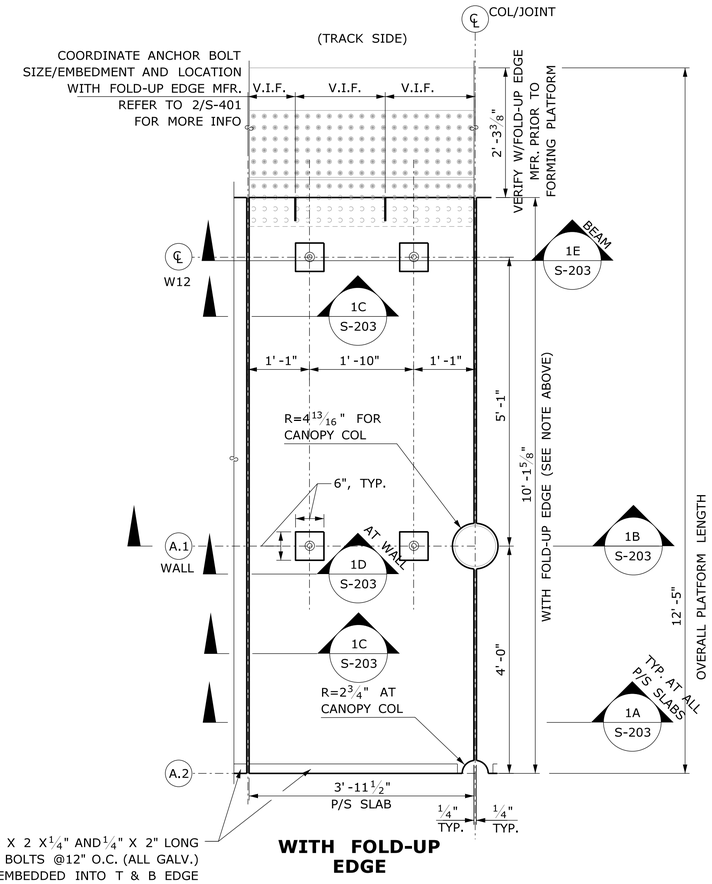

WITH FOLD-UP EDGE

TYPICAL P/S CONCRETE PLATFORM PLANKS

SCALE: 3/4"=1'-0"

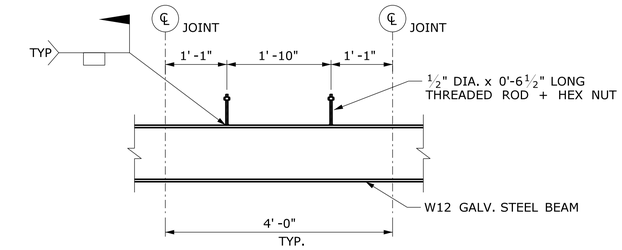

TYPICAL DETAIL STEEL BEAM CONNECTORS — **1E / S-203**

SCALE: 3/4"=1'-0"

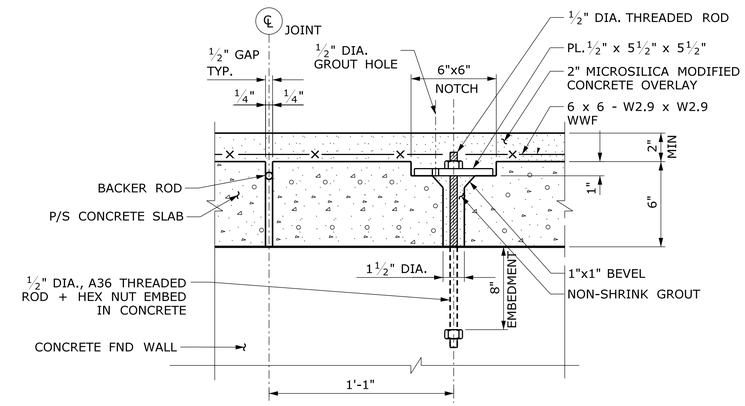

TYPICAL DETAIL - P/S SLAB TO WALL CONNECTION — **1D / S-203**

SCALE: 3/4"=1'-0"

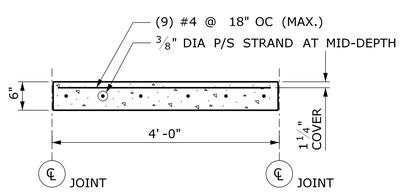

NOTE:
CONTRACTOR TO COORDINATE TRANSVERSE REBAR PLACEMENT WITH FOLD-UP EDGE AND HAND RAIL ANCHOR BOLT LOCATIONS. REBAR SHOULD BE PLACED WITHIN 2 1/2" OF THE END OF THE PRECAST PRESTRESSED PANELS.

TYPICAL SECTION - STRAND LAYOUT THRU COLUMN — **1A / S-203**

SCALE: 3/4"=1'-0"

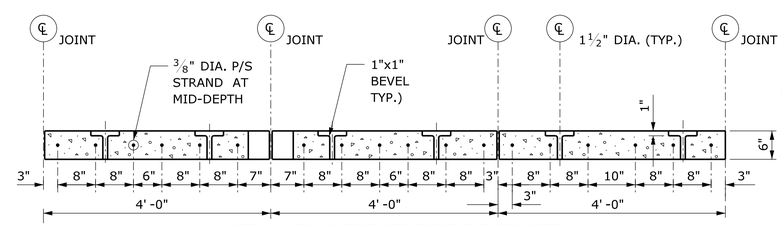

NOTE: NO TRANSVERSE REINFORCEMENT REQUIRED.

TYPICAL SECTION - STRAND LAYOUT THRU COLUMN — **1B / S-203**

SCALE: 3/4"=1'-0"

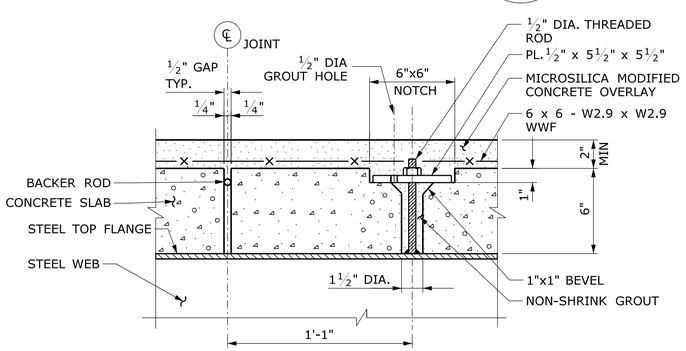

TYPICAL DETAIL - P/S SLAB TO BEAM CONNECTION — **1C / S-203**

SCALE: 3/4"=1'-0"

PLAN DETAILS AND SECTIONS FOR PRESTRESSED CONCRETE PLATFORM OPTION — **1 / S-203**

SCALE: 3/4"=1'-0"

REV.	DATE	REVISION DESCRIPTION	SHEET NO.

Filename: FD_MSH_STR_0027_0048_S-203.dgn

THE INFORMATION, INCLUDING ESTIMATED QUANTITIES OF WORK, SHOWN ON THESE SHEETS IS BASED ON LIMITED INVESTIGATIONS BY THE STATE AND IS IN NO WAY WARRANTED TO INDICATE THE CONDITIONS OF ACTUAL QUANTITIES OF WORK WHICH WILL BE REQUIRED.

Date Plotted: October 01, 2014

DESIGNER/DRAFTER: KR-M
CHECKED BY: MDD
SCALE AS NOTED

STATE OF CONNECTICUT
DEPARTMENT OF TRANSPORTATION

ENGINEER: BAKER ENGINEERING
APPROVED BY:
DATE:

PROJECT TITLE: SHORE LINE EAST RAILROAD STATIONS

TOWN: CLINTON

DRAWING TITLE: P/C CONCRETE PLATFORM SECTIONS & DETAILS

PROJECT NO. 310-0059
DRAWING NO. S-203
SHEET NO. 06.14

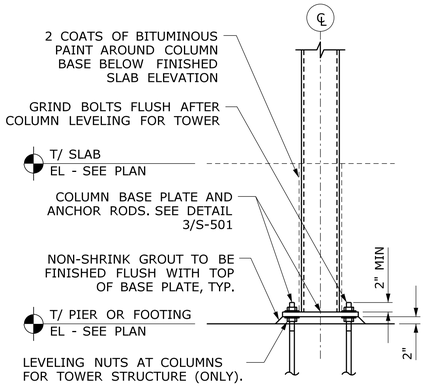

TYP COLUMN BASE DETAIL

SCALE: NTS

10 / S-204

REINFORCING STEEL DEVELOPMENT LENGTH SCHEDULE 4000PSI

BAR SIZE	TOP BARS	OTHER BARS
#3	50 x BAR DIA = 1'-7"	38 x BAR DIA = 1'-3"
#4	50 x BAR DIA = 2'-1"	38 x BAR DIA = 1'-7"
#5	50 x BAR DIA = 2'-8"	38 x BAR DIA = 2'-0"
#6	50 x BAR DIA = 3'-2"	38 x BAR DIA = 2'-5"
#7	63 x BAR DIA = 4'-8"	48 x BAR DIA = 3'-6"
#8	63 x BAR DIA = 5'-3"	48 x BAR DIA = 4'-0"
#9	63 x BAR DIA = 5'-11"	48 x BAR DIA = 4'-6"
#10	63 x BAR DIA = 6'-7"	48 x BAR DIA = 5'-0"

NOTES:

1. TOP BARS INCLUDE FOOTING REINFORCEMENT WITH MORE THAN 12" OF CONCRETE CAST BELOW THE REBAR AND ALL HORIZONTAL WALL REINFORCEMENT WITHOUT EXCEPTION. REFER TO ACI 318-02 FOR MORE INFORMATION. OTHER BARS INCLUDE FOOTING REINFORCEMENT WITH LESS THAN 12" OF CONCRETE CAST BELOW THE REBAR.
2. CONCRETE IS NORMAL WEIGHT AND REINFORCEMENT IS Fy=60 KSI.
3. PROVIDE APPROPRIATE FACTORS FOR LIGHTWEIGHT CONCRETE AND EPOXY COATED REINFORCEMENT PER ACI.
4. MULTIPLY TABLE VALUES BY 1.3 FOR LAP SPLICE LENGTHS.
5. MINIMUM CLEAR SPACING OF BARS SHALL NOT BE LESS THAN 3 BAR DIAMETERS. CLEAR COVER SHALL NOT BE LESS THAN THE MOST RESTRICTIVE REQUIREMENT OF 1 BAR DIAMETER, THE MINIMUM CLEAR COVER DIMENSION LISTED IN THE CONTRACT DOCUMENTS AND THE ACI CODE. REPORT ANY DISCREPANCIES TO THE ENGINEER OF RECORD.

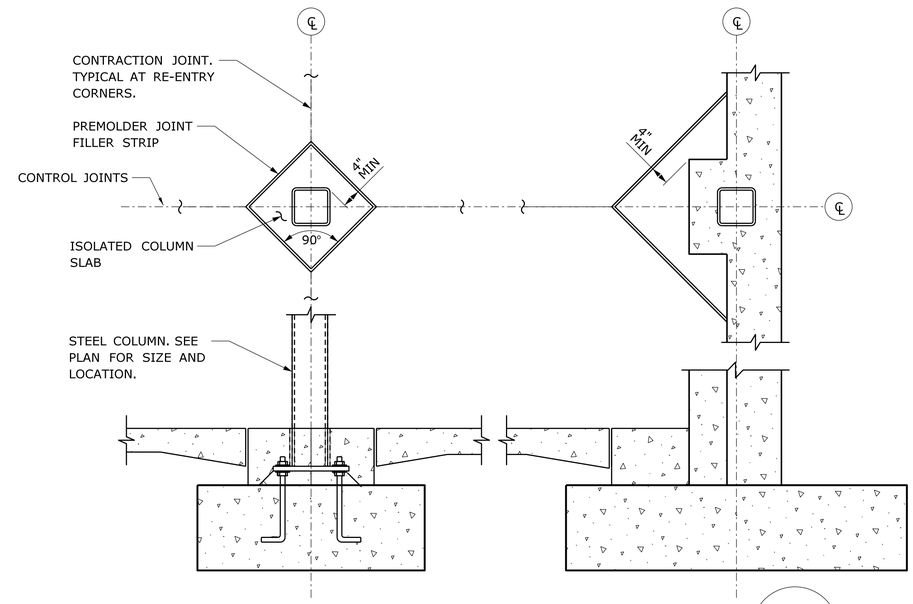

TYP ISOLATION JOINT AT COLUMN PIER DETAIL

SCALE: NTS

6 / S-204

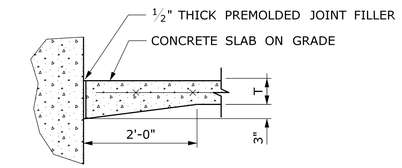

TYP SLAB ON GRADE EDGE PERIMETER DETAIL

SCALE: NTS

4 / S-204

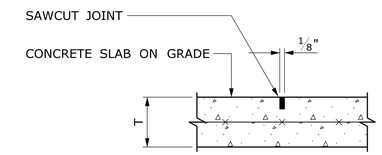

TYP SLAB CONSTRUCTION JOINT DETAIL

SCALE: NTS

3 / S-204

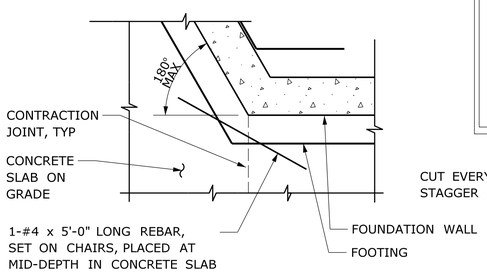

TYP WALL/FOOTING RE-ENTRY CORNER DETAIL

SCALE: NTS

9 / S-204

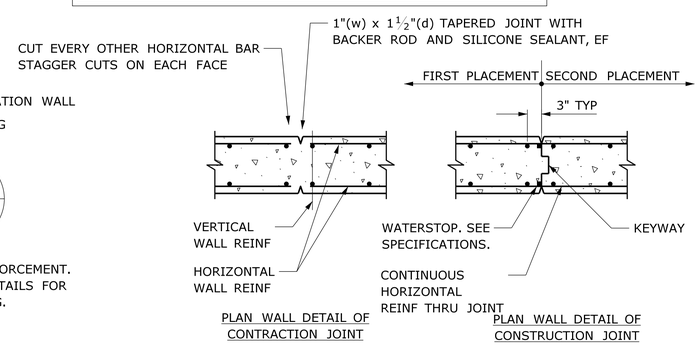

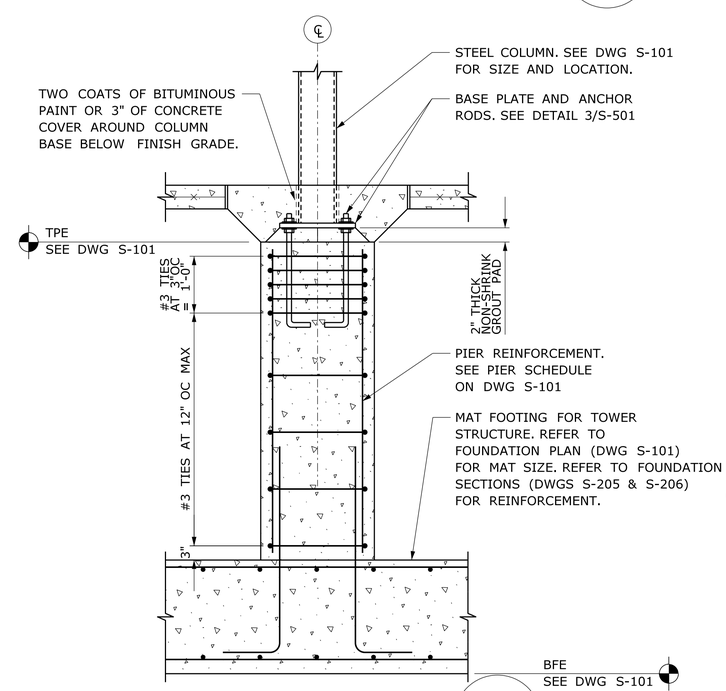

TYP PIER DETAIL

SCALE: NTS

5 / S-204

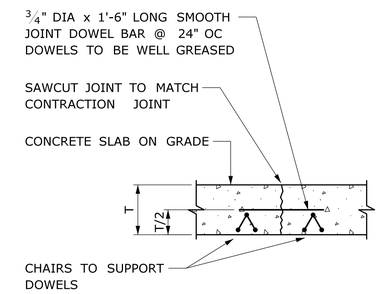

TYP INTERIOR SLAB ON GRADE DETAIL

SCALE: NTS

2 / S-204

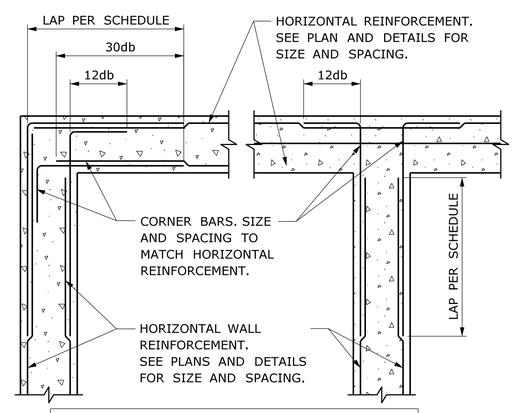

NOTE:
VERTICAL REINFORCEMENT NOT SHOWN FOR CLARITY.

TYP WALL AND FOOTING INSTERSECTION DETAILS

SCALE: NTS

8 / S-204

NOTES:

1. PROVIDE CONSTRUCTION JOINTS OR CONTROL JOINTS AT 65'-0" MAX.
2. LOCATE 1ST JOINT NO FURTHER THAN 15'-0" FROM WALL CORNER.
3. JOINT LOCATIONS AND DETAILS TO BE APPROVED BY ARCHITECT AND STRUCTURAL ENGINEER OF RECORD.
4. DO NOT USE THIS DETAIL FOR SHEARWALLS OR WALLS THAT ARE DESIGNED TO SPAN HORIZONTALLY AS INDICATED IN PLANS.
5. PRIOR TO PLACEMENT OF WALLS AT CONSTRUCTION JOINTS, ABRASIVE BLAST OR CHIP 1ST PLACEMENT FACE OF JOINT TO REMOVE ANY LAITANCE HONEYCOMBING. CLEAN DEBRIS WITH WATER AND STIFF BRUSH.
6. LOCATE JOINT NO CLOSER THAN 4'-0" FROM PIER OR CORNER OR PORTION OF WALL THAT SUPPORTS CONCENTRATED LOAD.
7. IMMEDIATELY BEFORE NO PORTION OF CONCRETE WALL IS TO BE POURED, WET END OF WALL WITH CONSTRUCTION JOINT BUT LEAVE NO STANDING WALL AT JOINT.
8. CLEAN JOINT OF ANY DEBRIS OR STANDING WATER PRIOR TO PLACEMENT OF JOINT SEALANT.

TYP WALL JOINTS DETAIL

SCALE: NTS

7 / S-204

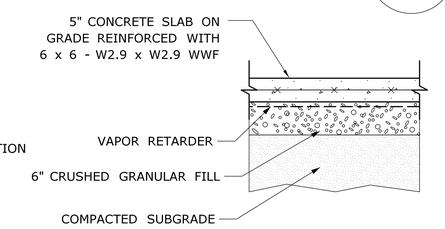

REFER TO GENERAL NOTES AND SPECIFICATIONS FOR ADDITIONAL NOTES AND REQUIREMENTS.

TYP INTERIOR SLAB ON GRADE DETAIL

SCALE: NTS

1 / S-204

REV.	DATE	REVISION DESCRIPTION	SHEET NO.

Filename: FD_MSH_STR_0027_0048_S-204.dgn

THE INFORMATION, INCLUDING ESTIMATED QUANTITIES OF WORK, SHOWN ON THESE SHEETS IS BASED ON LIMITED INVESTIGATIONS BY THE STATE AND IS IN NO WAY WARRANTED TO INDICATE THE CONDITIONS OF ACTUAL QUANTITIES OF WORK WHICH WILL BE REQUIRED.

Date Plotted: October 01, 2014

DESIGNER/DRAFTER: KR-M
CHECKED BY: MDD
SCALE AS NOTED

STATE OF CONNECTICUT
DEPARTMENT OF TRANSPORTATION

ENGINEER: BAKER ENGINEERING
APPROVED BY:
DATE:

PROJECT TITLE: SHORE LINE EAST RAILROAD STATIONS

TOWN: CLINTON

DRAWING TITLE: TOWER - TYPICAL FOUNDATION DETAILS

PROJECT NO. 310-0059
DRAWING NO. S-204
SHEET NO. 06.15

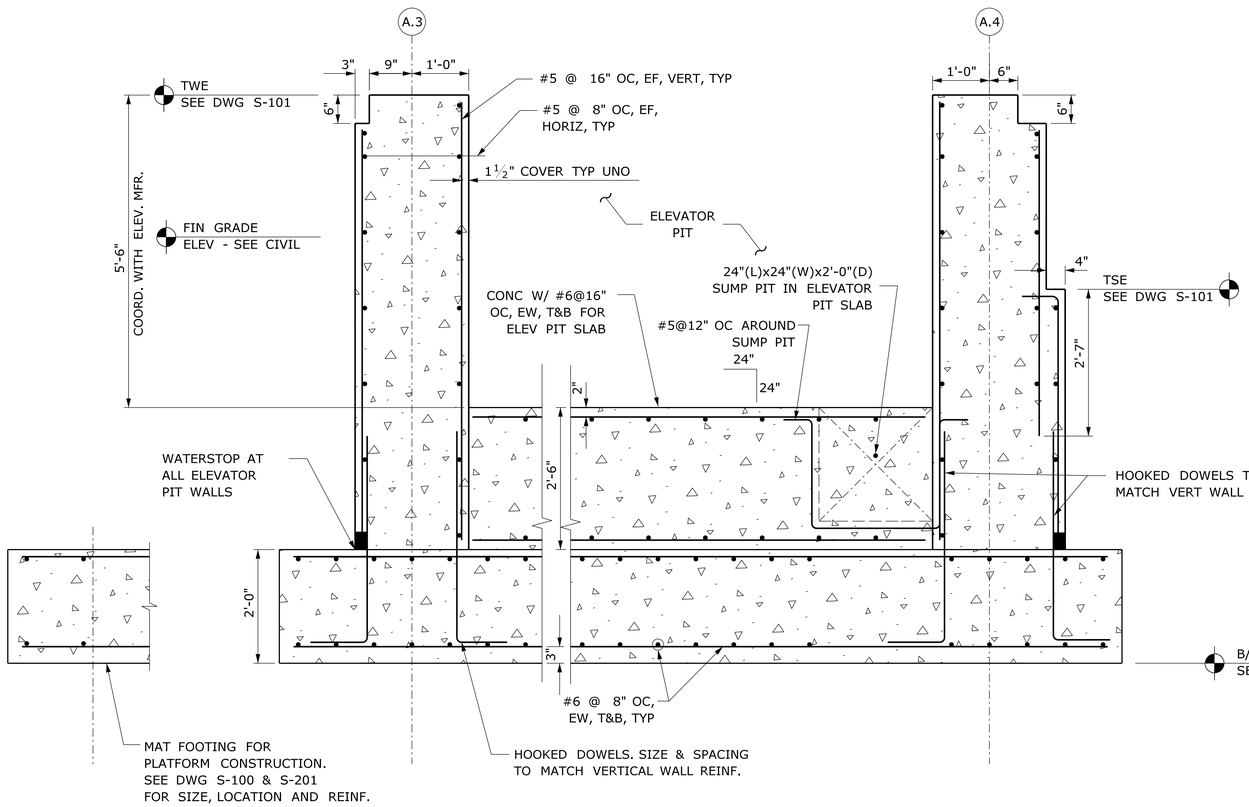

NOTE:
BREAK ELEV PIT SLAB REINFORCEMENT AT SUMP PIT

SECTION THRU ELEVATOR 2 / S-101

SCALE: ¾"=1'-0"

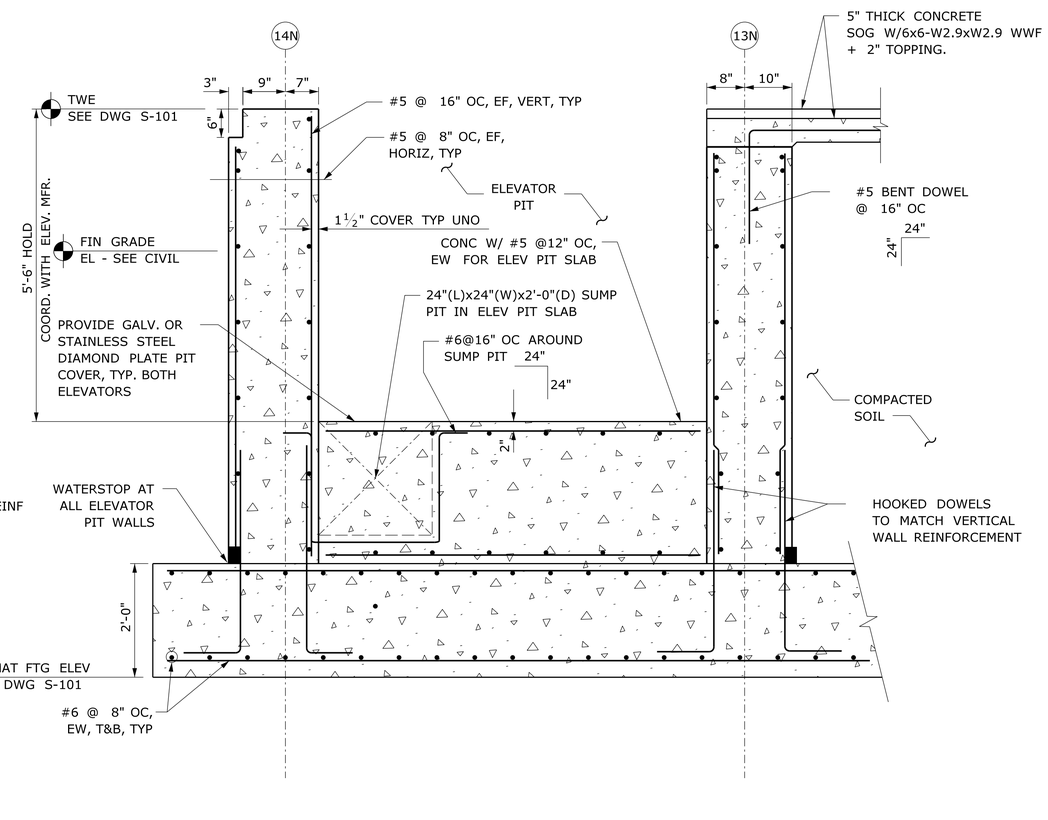

NOTE:
BREAK ELEV PIT SLAB REINFORCEMENT AT SUMP PIT

SECTION THRU ELEVATOR 1 / S-101

SCALE: ¾"=1'-0"

REV.	DATE	REVISION DESCRIPTION	SHEET NO.

Filename: FD_MSH_STR_0027_0048_S-205.dgn

THE INFORMATION, INCLUDING ESTIMATED QUANTITIES OF WORK, SHOWN ON THESE SHEETS IS BASED ON LIMITED INVESTIGATIONS BY THE STATE AND IS IN NO WAY WARRANTED TO INDICATE THE CONDITIONS OF ACTUAL QUANTITIES OF WORK WHICH WILL BE REQUIRED.

Date Plotted: October 01, 2014

DESIGNER/DRAFTER: KR-M

CHECKED BY: MDD

SCALE AS NOTED

STATE OF CONNECTICUT
DEPARTMENT OF TRANSPORTATION

ENGINEER: BAKER ENGINEERING

APPROVED BY:

DATE:

PROJECT TITLE:

SHORE LINE EAST RAILROAD STATIONS

TOWN: **CLINTON**

DRAWING TITLE: **NORTH TOWER FOUNDATION SECTIONS**

PROJECT NO. **310-0059**

DRAWING NO. **S-205**

SHEET NO. **06.16**

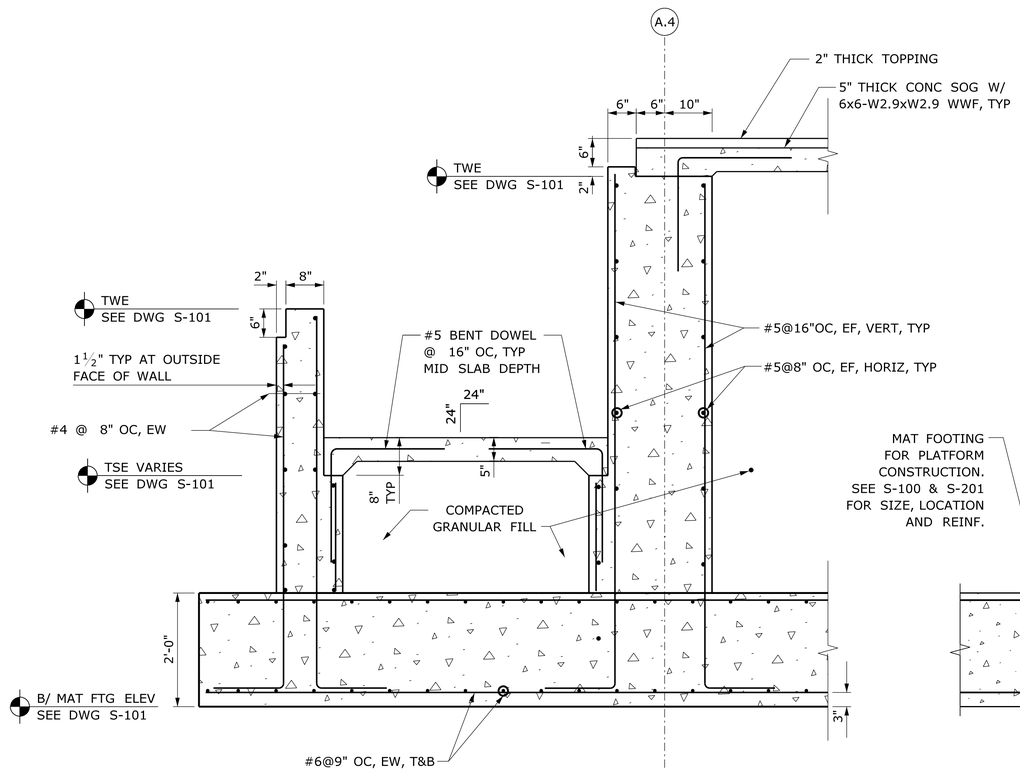

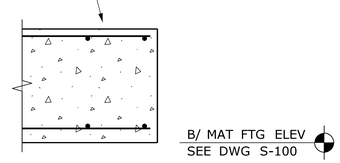

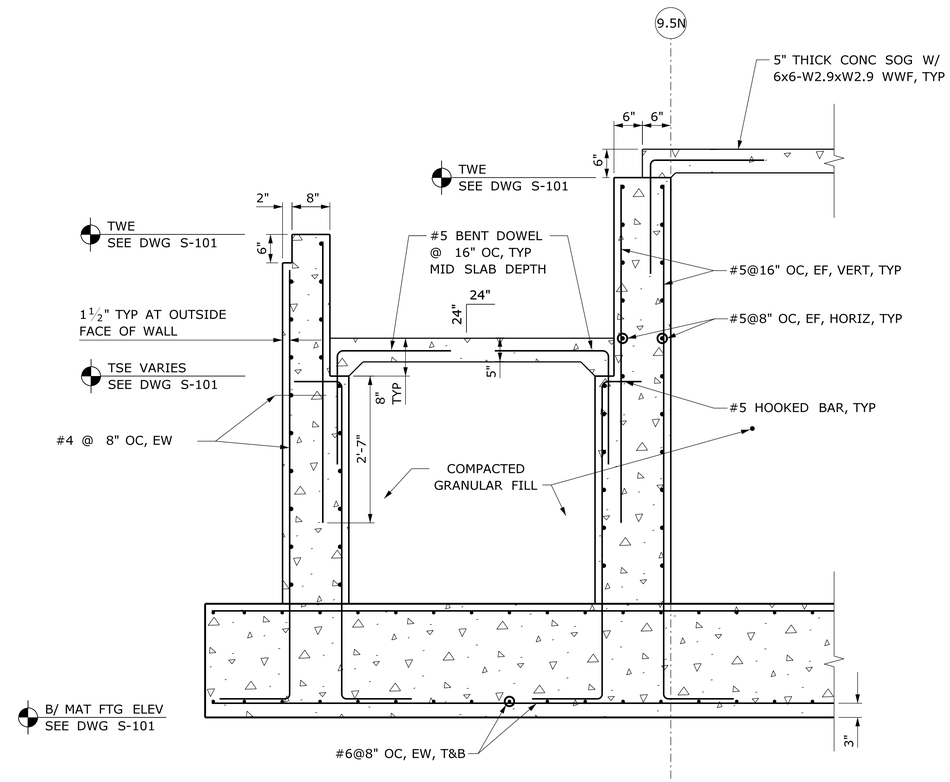

SECTION THRU RAMP — 1 / S-101

SCALE: ¾"=1'-0"

SECTION AT LANDING — 2 / S-101

SCALE: ¾"=1'-0"

REV.	DATE	REVISION DESCRIPTION	SHEET NO.

Filename: FD_MSH_STR_0027_0048_S-206.dgn

THE INFORMATION, INCLUDING ESTIMATED QUANTITIES OF WORK, SHOWN ON THESE SHEETS IS BASED ON LIMITED INVESTIGATIONS BY THE STATE AND IS IN NO WAY WARRANTED TO INDICATE THE CONDITIONS OF ACTUAL QUANTITIES OF WORK WHICH WILL BE REQUIRED.

Date Plotted: October 01, 2014

DESIGNER/DRAFTER: KR-M

CHECKED BY: MDD

SCALE AS NOTED

STATE OF CONNECTICUT
DEPARTMENT OF TRANSPORTATION

ENGINEER: BAKER ENGINEERING

APPROVED BY:

DATE:

PROJECT TITLE:
SHORE LINE EAST
RAILROAD STATIONS

TOWN: CLINTON

DRAWING TITLE:
NORTH TOWER
FOUNDATION SECTIONS

PROJECT NO. 310-0059

DRAWING NO. S-206

SHEET NO. 06.17

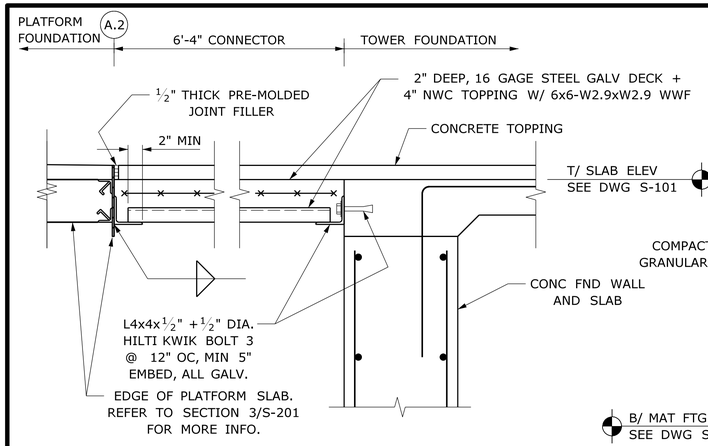

SECTION AT TOWER TO PLATFORM CONNECTOR — 6 / S-101

SCALE: 1¼"=1'-0"

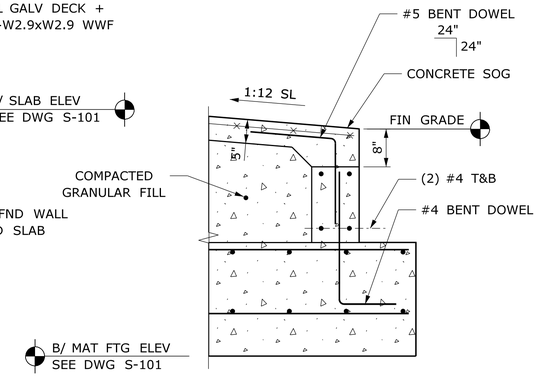

SECTION AT RAMP ENTRANCE — 5 / S-101

SCALE: ¾"=1'-0"

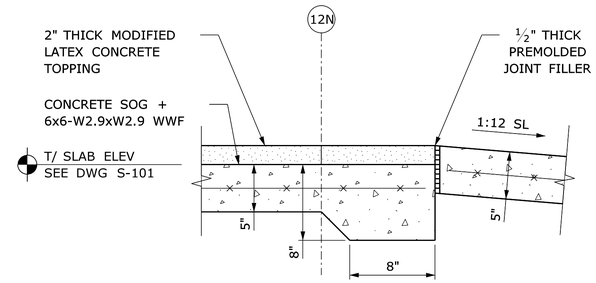

SECTION AT SLAB TRANSITION — 4 / S-101

SCALE: 1½"=1'-0"

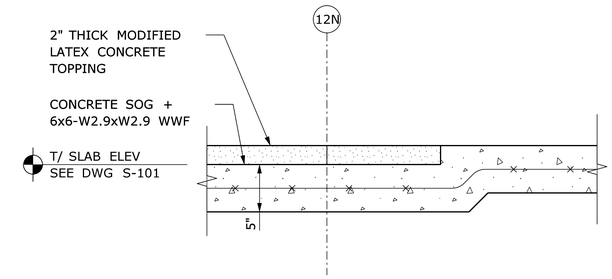

SECTION AT SLAB DEPRESSION — 3 / S-101

SCALE: 1½"=1'-0"

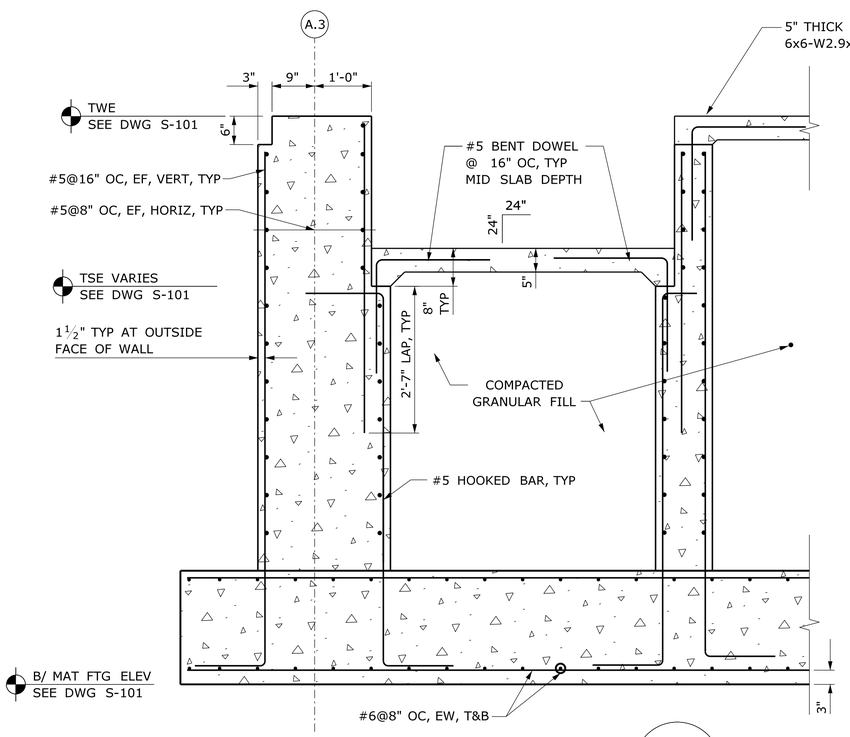

SECTION THRU RAMP — 2 / S-101

SCALE: ¾"=1'-0"

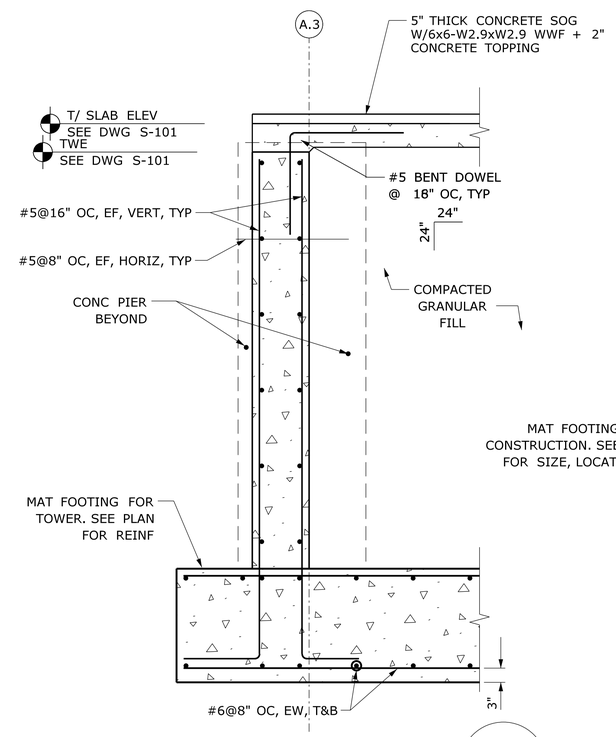

SECTION AT LANDING — 1 / S-101

SCALE: ¾"=1'-0"

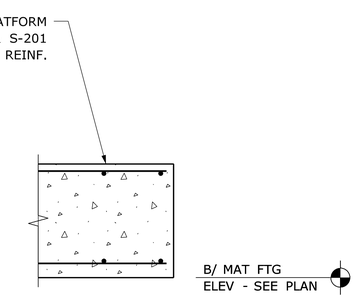

REV.	DATE	REVISION DESCRIPTION	SHEET NO.

Filename: FD_MSH_STR_0027_0059_S-206.dgn

THE INFORMATION, INCLUDING ESTIMATED QUANTITIES OF WORK, SHOWN ON THESE SHEETS IS BASED ON LIMITED INVESTIGATIONS BY THE STATE AND IS IN NO WAY WARRANTED TO INDICATE THE CONDITIONS OF ACTUAL QUANTITIES OF WORK WHICH WILL BE REQUIRED.

Date Plotted: October 01, 2014

DESIGNER/DRAFTER: KR-M

CHECKED BY: MDD

SCALE AS NOTED

STATE OF CONNECTICUT
DEPARTMENT OF TRANSPORTATION

ENGINEER: BAKER ENGINEERING

APPROVED BY:

DATE:

PROJECT TITLE:

SHORE LINE EAST RAILROAD STATIONS

TOWN: **CLINTON**

DRAWING TITLE: **NORTH TOWER FOUNDATION SECTIONS**

PROJECT NO. **310-0059**

DRAWING NO. **S-207**

SHEET NO. **06.18**

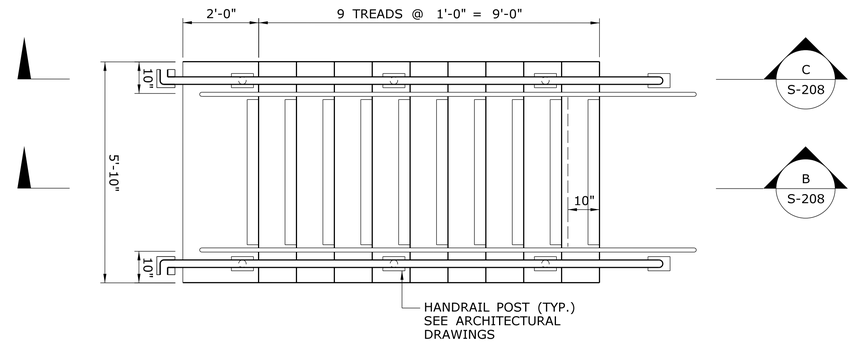

PLATFORM STAIRS - PLAN (A / S-208)

SCALE: ½"=1'-0"

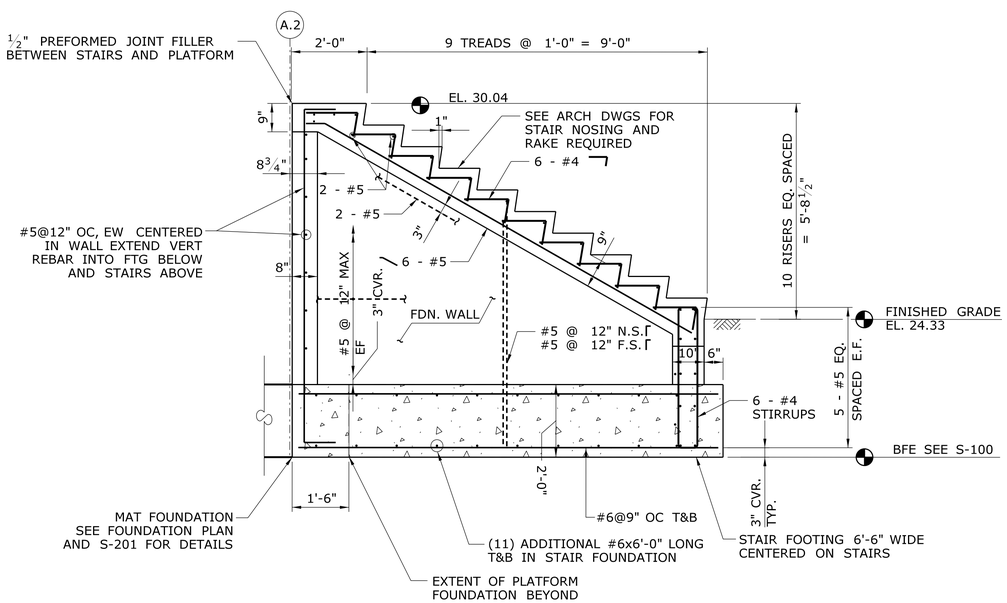

PLATFORM STAIRS - SECTION (B / S-208)

SCALE: ½"=1'-0"

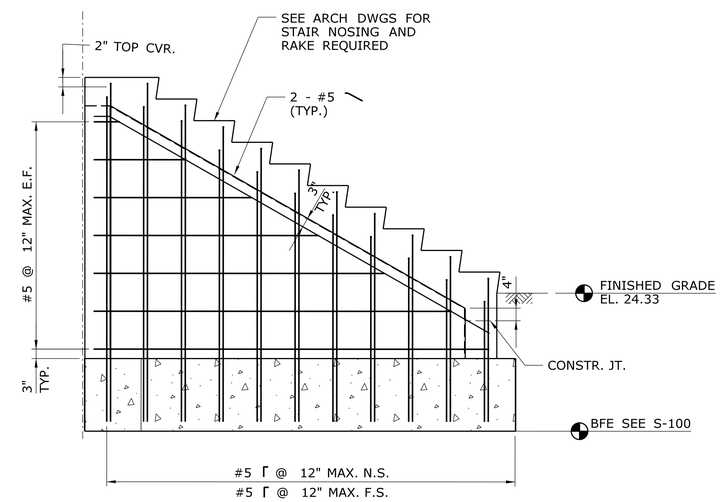

NOTE: STAIR, FOOTING, AND PERPENDICULAR REINFORCEMENT NOT SHOWN FOR CLARITY.

PLATFORM STAIRS - SECTION (C / S-208)

SCALE: ½"=1'-0"

NOTES:
1. FOR SLIP-RESISTANT CAST IRON NOSING, SEE ARCH DRAWINGS.
2. RISER HEIGHT NOT TO EXCEED 7".

REV.	DATE	REVISION DESCRIPTION	SHEET NO.

Filename: FD_MSH_STR_0014_0056_S-211.dgn

THE INFORMATION, INCLUDING ESTIMATED QUANTITIES OF WORK, SHOWN ON THESE SHEETS IS BASED ON LIMITED INVESTIGATIONS BY THE STATE AND IS IN NO WAY WARRANTED TO INDICATE THE CONDITIONS OF ACTUAL QUANTITIES OF WORK WHICH WILL BE REQUIRED.

Date Plotted: October 01, 2014

DESIGNER/DRAFTER: KR-M
CHECKED BY: MDD
SCALE AS NOTED

STATE OF CONNECTICUT
DEPARTMENT OF TRANSPORTATION

ENGINEER: BAKER ENGINEERING
APPROVED BY:
DATE:

PROJECT TITLE: SHORE LINE EAST RAILROAD STATIONS

TOWN: CLINTON

DRAWING TITLE: PLATFORM STAIRS DETAILS

PROJECT NO. 310-0059
DRAWING NO. S-208
SHEET NO. 06.19

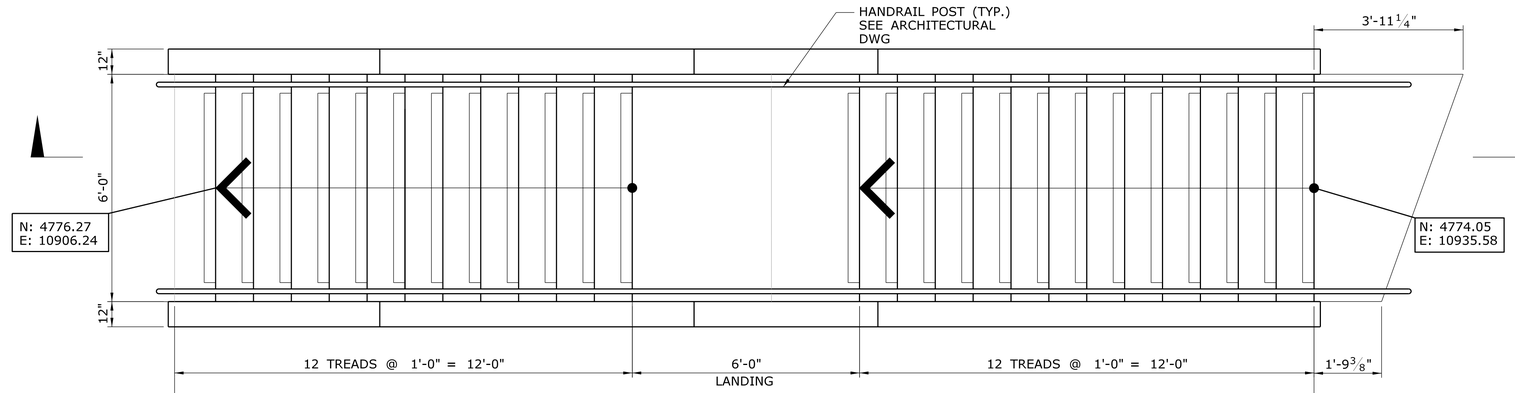

SITE STAIR 1 - PLAN

SCALE: ½"=1'-0"

A / S-209

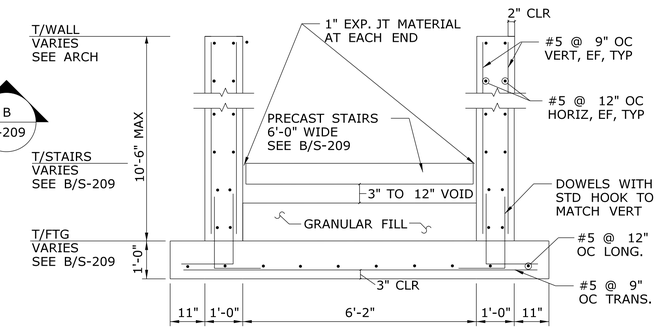

SITE STAIRS RETAINING WALL/FOOTING

SCALE: ½" = 1'-0"

C / S-209

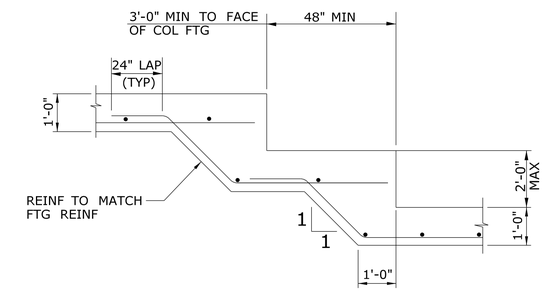

STEPPED FOOTING

SCALE: NTS

D / S-209

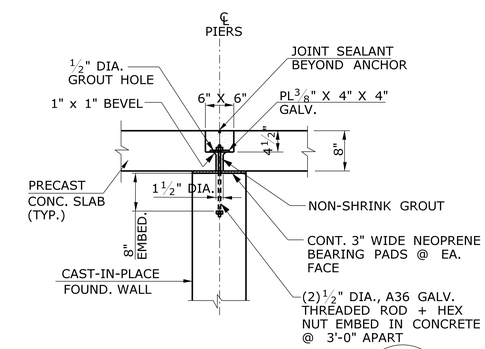

SUPPORT AT PANEL JOINTS

SCALE: 3/4" = 1'-0"

E / S-209

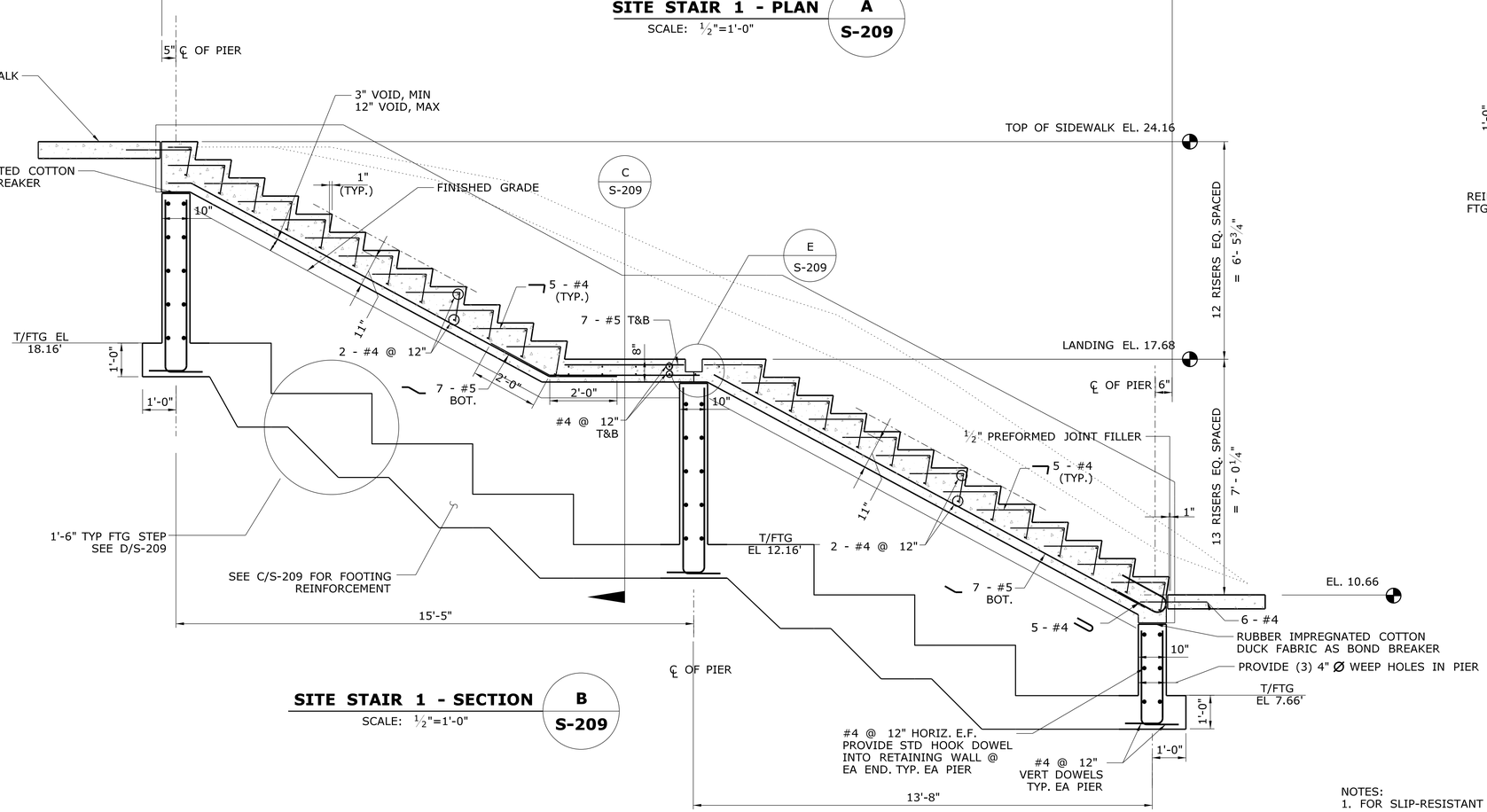

SITE STAIR 1 - SECTION

SCALE: ½"=1'-0"

B / S-209

NOTES:
1. FOR SLIP-RESISTANT CAST IRON NOSING, SEE ARCHITECTURAL DRAWINGS.
2. RISER HEIGHT NOT TO EXCEED 7".

REV.	DATE	REVISION DESCRIPTION	SHEET NO.

Filename: FD_MSH_STR_0027_0059_S-209

KR-M
THE INFORMATION, INCLUDING ESTIMATED QUANTITIES OF WORK, SHOWN ON THESE SHEETS IS BASED ON LIMITED INVESTIGATIONS BY THE STATE AND IS IN NO WAY WARRANTED TO INDICATE THE CONDITIONS OF ACTUAL QUANTITIES OF WORK WHICH WILL BE REQUIRED.

Date Plotted: October 01, 2014

DESIGNER/DRAFTER:
CHECKED BY:
SCALE AS NOTED

STATE OF CONNECTICUT
DEPARTMENT OF TRANSPORTATION

ENGINEER: BAKER ENGINEERING
APPROVED BY:
DATE:

PROJECT TITLE:
SHORE LINE EAST
RAILROAD STATIONS

TOWN: CLINTON

DRAWING TITLE: SITE STAIR DETAILS

PROJECT NO. 310-0059
DRAWING NO. S-209
SHEET NO. 06.20

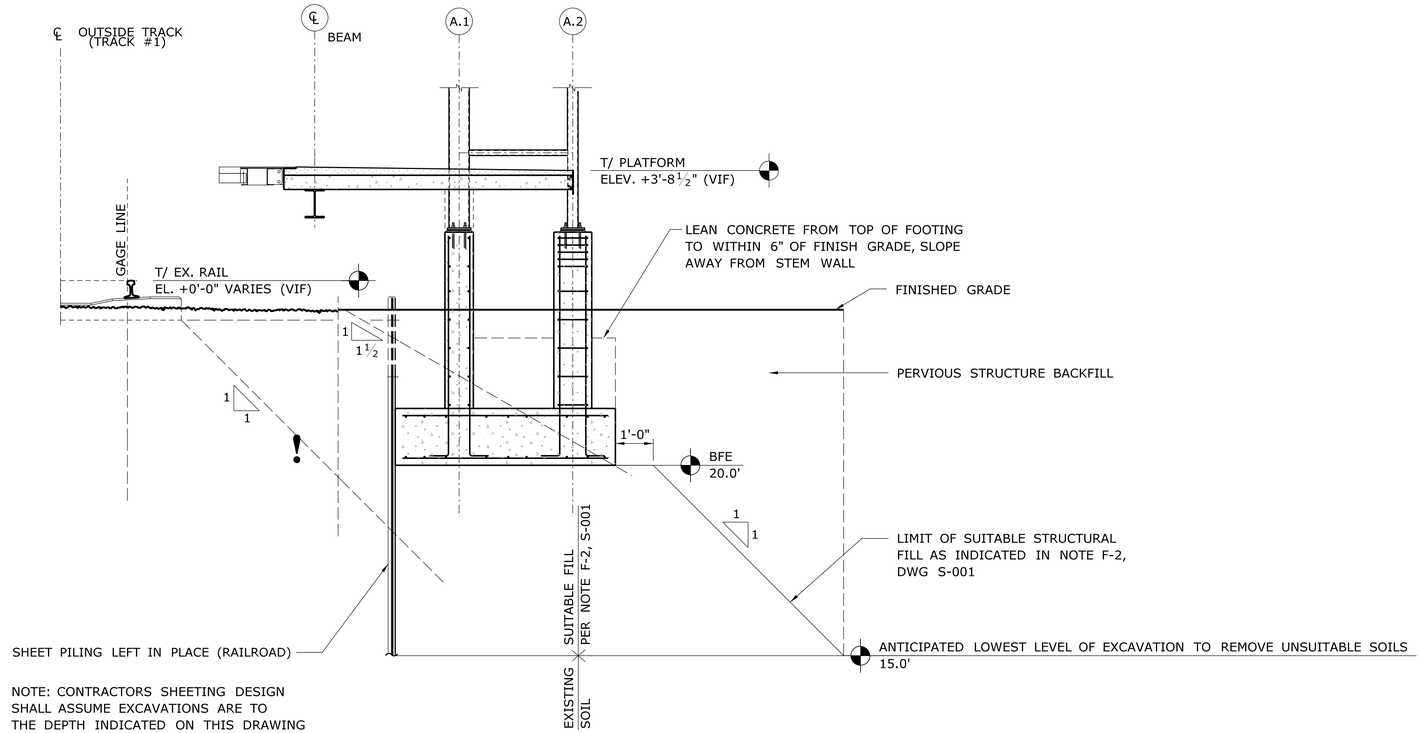

NOTE: CONTRACTORS SHEETING DESIGN
SHALL ASSUME EXCAVATIONS ARE TO
THE DEPTH INDICATED ON THIS DRAWING

SECTION AT COLUMN 1 / S-210

SCALE: ½" = 1'

REV.	DATE	REVISION DESCRIPTION	SHEET NO.

Filename: FD_MSH_STR_0027_0048_S-210.dgn

THE INFORMATION, INCLUDING ESTIMATED QUANTITIES OF WORK, SHOWN ON THESE SHEETS IS BASED ON LIMITED INVESTIGATIONS BY THE STATE AND IS IN NO WAY WARRANTED TO INDICATE THE CONDITIONS OF ACTUAL QUANTITIES OF WORK WHICH WILL BE REQUIRED.

Date Plotted: October 01, 2014

DESIGNER/DRAFTER: KR-M

CHECKED BY: MDD

SCALE AS NOTED

STATE OF CONNECTICUT
DEPARTMENT OF TRANSPORTATION

ENGINEER: BAKER ENGINEERING

APPROVED BY: DATE:

PROJECT TITLE:

SHORE LINE EAST RAILROAD STATIONS

TOWN: **CLINTON**

DRAWING TITLE: **FOOTING EXCAVATION DETAILS**

PROJECT NO. **310-0059**

DRAWING NO. **S-210**

SHEET NO. **06.21**

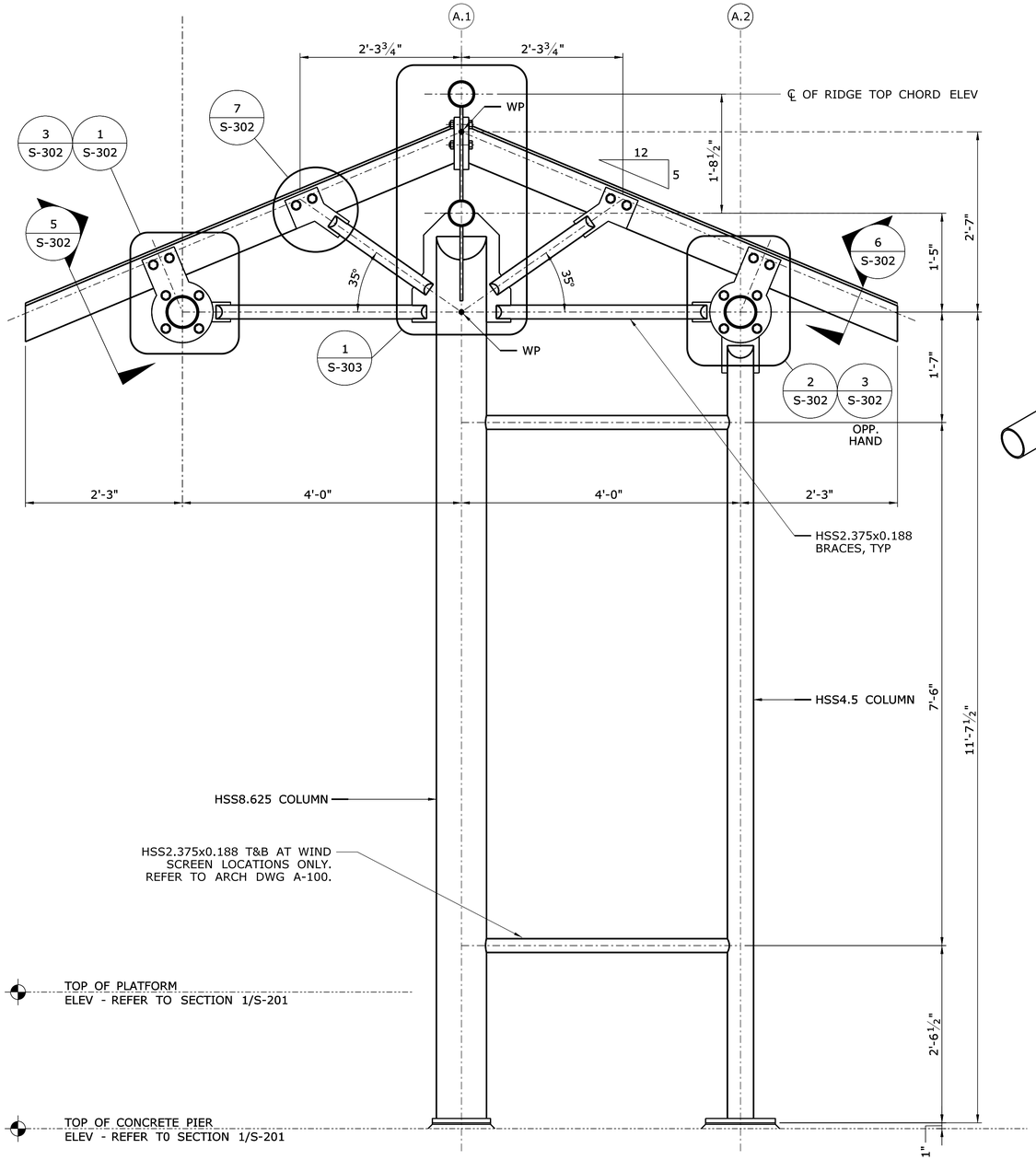

TYP CANOPY ELEVATION — 1 / S-104

SCALE: 1"=1'-0"

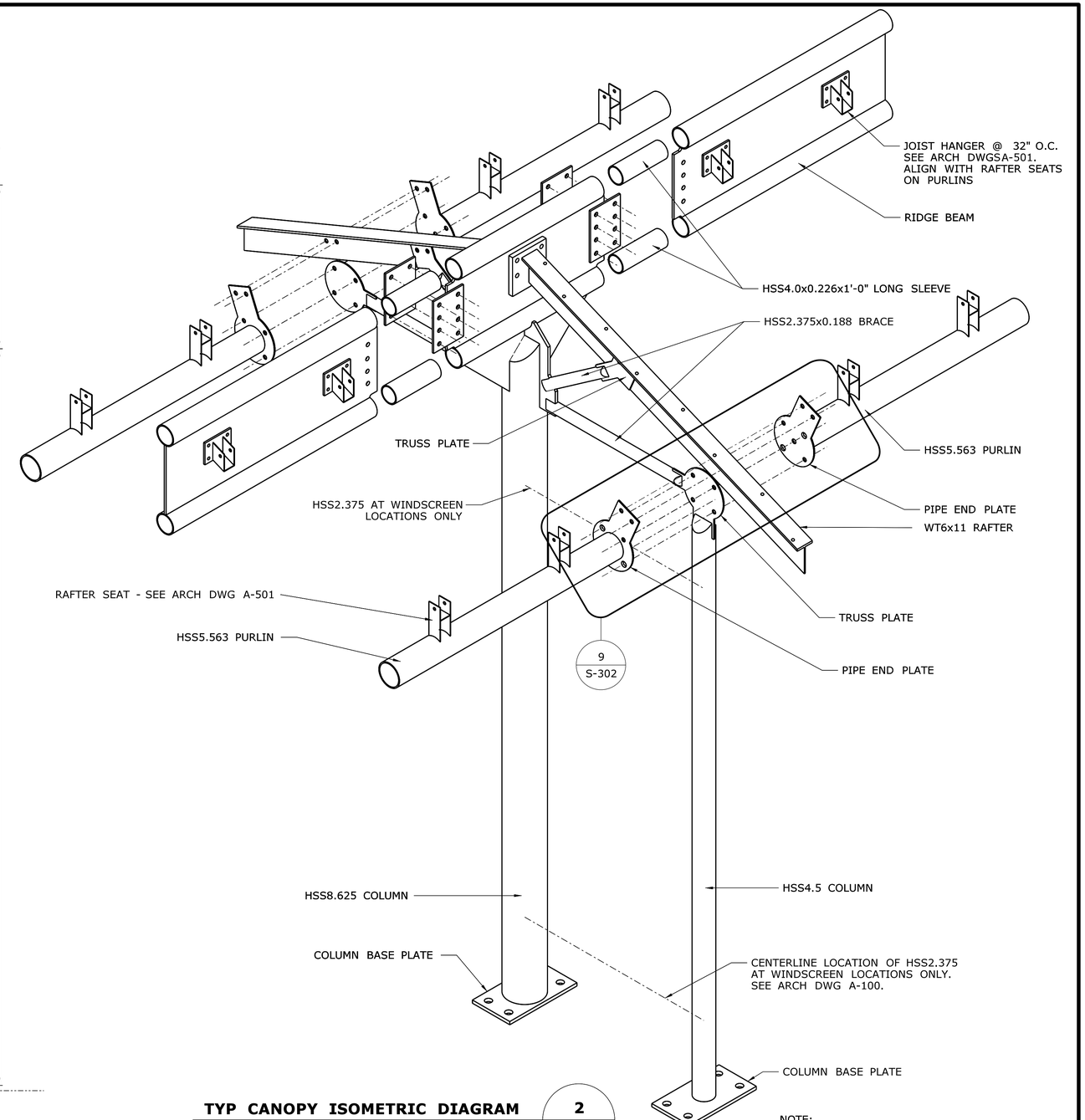

TYP CANOPY ISOMETRIC DIAGRAM — 2 / S-301

SCALE: NTS

NOTE:

1. REFER TO PLATFORM FOUNDATION PLAN ON DWG S-100 FOR CANOPY COLUMN LOCATIONS AND SIZE.

REV.	DATE	REVISION DESCRIPTION	SHEET NO.

Filename: FD_MSH_STR_0027_0048_S-301.dgn

THE INFORMATION, INCLUDING ESTIMATED QUANTITIES OF WORK, SHOWN ON THESE SHEETS IS BASED ON LIMITED INVESTIGATIONS BY THE STATE AND IS IN NO WAY WARRANTED TO INDICATE THE CONDITIONS OF ACTUAL QUANTITIES OF WORK WHICH WILL BE REQUIRED.

Date Plotted: October 01, 2014

DESIGNER/DRAFTER: KR-M

CHECKED BY: MDD

SCALE AS NOTED

STATE OF CONNECTICUT
DEPARTMENT OF TRANSPORTATION

ENGINEER: BAKER ENGINEERING

APPROVED BY: DATE:

PROJECT TITLE: SHORE LINE EAST RAILROAD STATIONS

TOWN: CLINTON

DRAWING TITLE: CANOPY SECTION & DETAIL

PROJECT NO. 310-0059

DRAWING NO. S-301

SHEET NO. 06.22

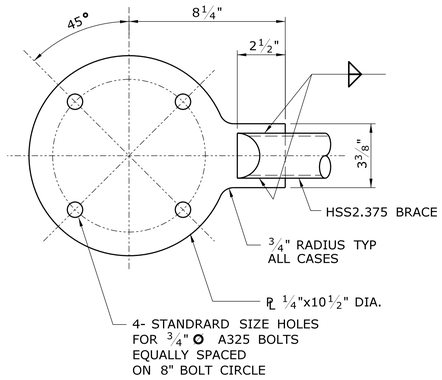

TRUSS PLATE DETAIL 1 / S-301
SCALE: 3"=1'-0"

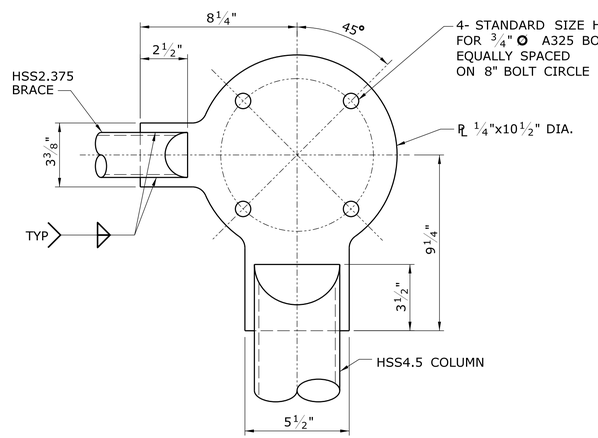

TRUSS PLATE DETAIL 2 / S-301
SCALE: 3"=1'-0"

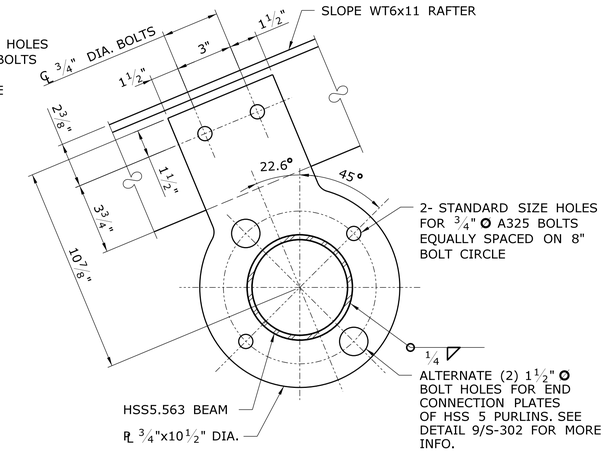

PIPE END PLATE DETAIL 3 / S-301
SCALE: 3"=1'-0"

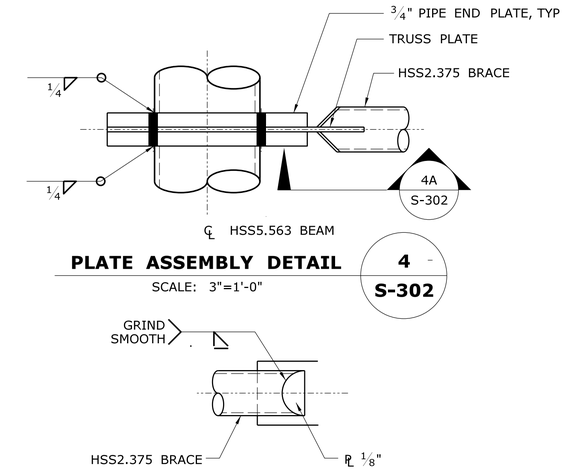

PLATE ASSEMBLY DETAIL 4 / S-302
SCALE: 3"=1'-0"

DETAIL 4A / S-302
SCALE: 3"=1'-0"

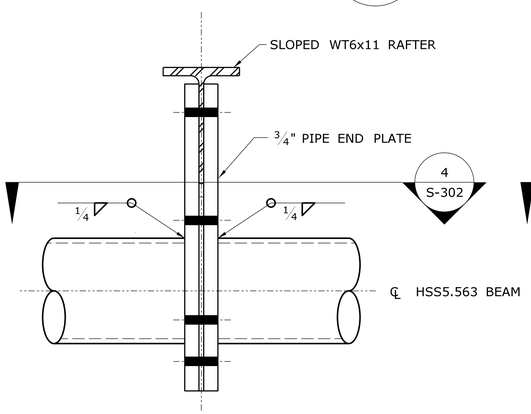

PLATE ASSEMBLY DETAIL 5 / S-301
SCALE: 3"=1'-0"

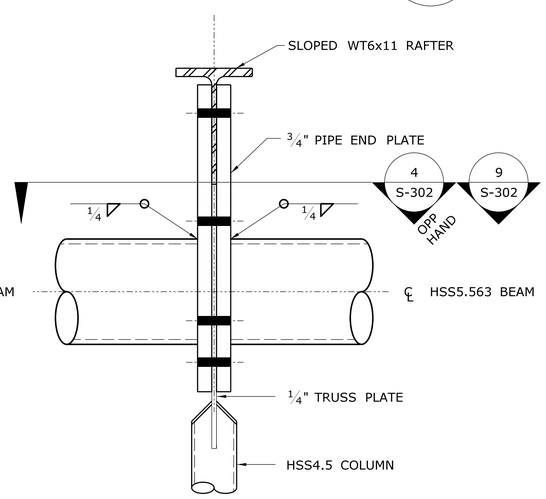

PLATE ASSEMBLY DETAIL 6 / S-301
SCALE: 3"=1'-0"

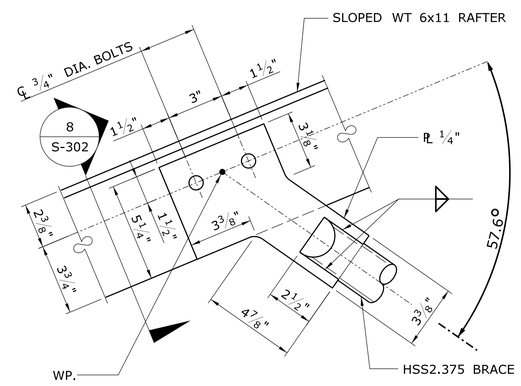

CONNECTION DETAIL 7 / S-301
SCALE: 3"=1'-0"

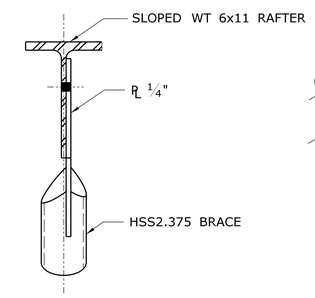

SECTION 8 / S-302
SCALE: 3"=1'-0"

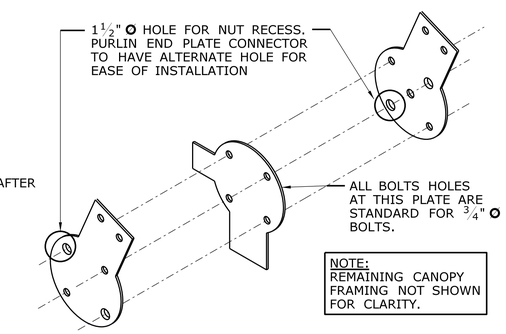

NOTE:
REMAINING CANOPY FRAMING NOT SHOWN FOR CLARITY.

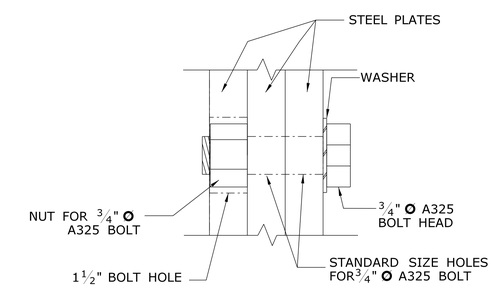

NOTE:
ALL STEEL FASTENERS TO BE GALV, TYP

SECTION DETAIL 9 / S-301
SCALE: NTS

NOTES:

1. REFER TO GENERAL NOTES, KEYS AND ABBREVIATIONS AND SPECIFICATIONS FOR ADDITIONAL INFO.
2. PROVIDE ⅛" THICK CLOSURE PLATES TO ALL OPEN ENDED PIPES.
3. ALL WELDS TO BE 3/16" THICK FILLET WELDS TYP, UON.

REV.	DATE	REVISION DESCRIPTION	SHEET NO.

Filename: FD_MSH_STR_0027_0048_S-302.dgn

THE INFORMATION, INCLUDING ESTIMATED QUANTITIES OF WORK, SHOWN ON THESE SHEETS IS BASED ON LIMITED INVESTIGATIONS BY THE STATE AND IS IN NO WAY WARRANTED TO INDICATE THE CONDITIONS OF ACTUAL QUANTITIES OF WORK WHICH WILL BE REQUIRED.

Date Plotted: October 01, 2014

DESIGNER/DRAFTER: KR-M
CHECKED BY: MDD
SCALE AS NOTED

STATE OF CONNECTICUT
DEPARTMENT OF TRANSPORTATION

ENGINEER: BAKER ENGINEERING
APPROVED BY:
DATE:

PROJECT TITLE:
SHORE LINE EAST
RAILROAD STATIONS

TOWN: CLINTON

DRAWING TITLE:
CANOPY FRAMING
DETAILS - 1

PROJECT NO. 310-0059
DRAWING NO. S-302
SHEET NO. 06.23

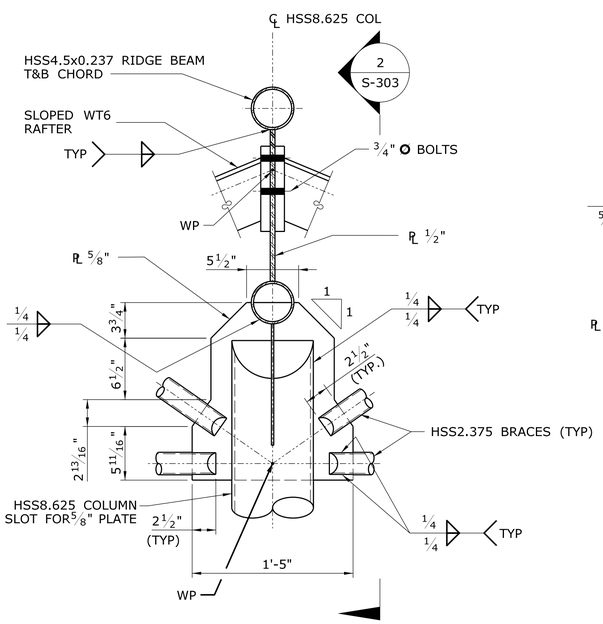

SECTION AT CANOPY RIDGE BEAM 1 / S-303 | 1 / S-301

SCALE: 1 1/2"=1'-0"

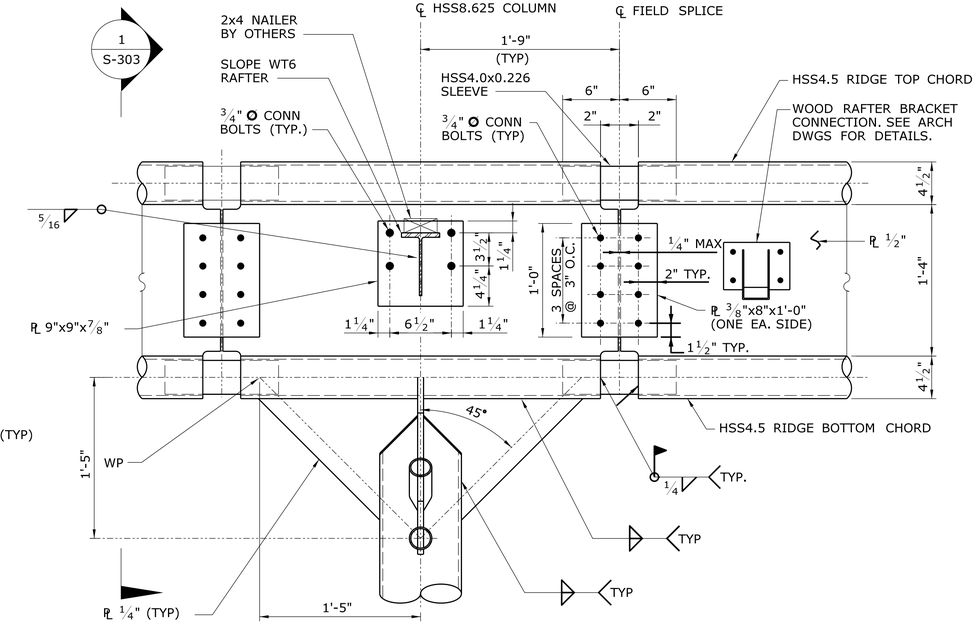

SECTION AT CANOPY RIDGE BEAM 2 / S-303

SCALE: 1 1/2"=1'-0"

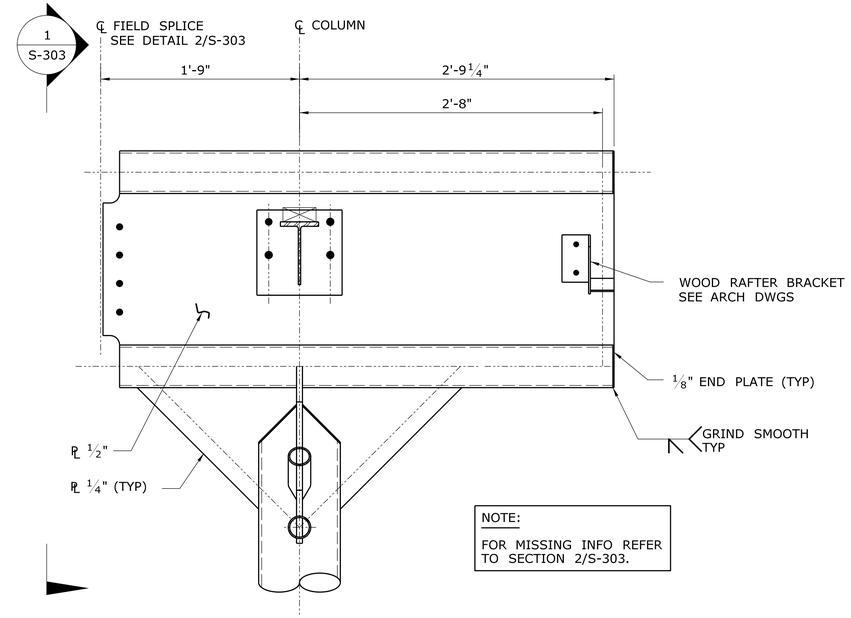

SECTION AT CANOPY RIDGE BEAM END 3 / S-104

SCALE: 1 1/2"=1'-0"

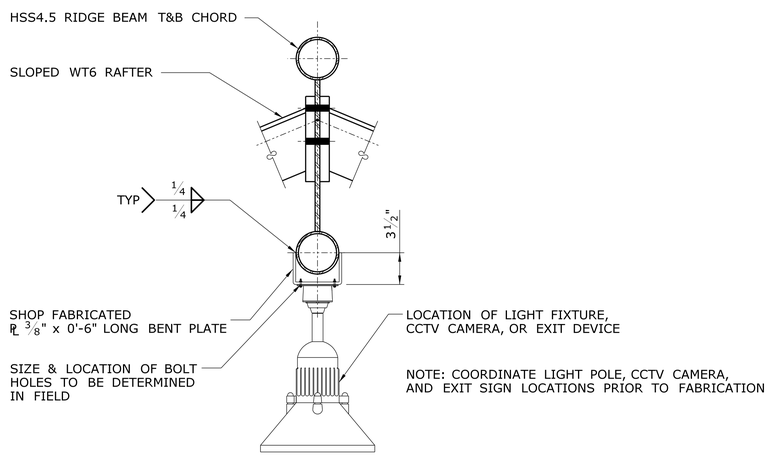

SECTION-LIGHT FIXTURE MOUNTING AT CANOPY RIDGE BEAM 4 / S-303

SCALE: 1 1/2"=1'-0"

NOTES:

1. REFER TO GENERAL NOTES, KEYS & ABBREVIATIONS AND SPECIFICATIONS FOR MORE INFO.
2. PROVIDE 1/8" THICK CLOSURE PLATE TO ALL OPEN ENDED PIPES.
3. ALL WELDS TO BE 3/16" THICK FILLET WELDS TYP, UON.

REV.	DATE	REVISION DESCRIPTION	SHEET NO.

Filename: FD_MSH_STR_0027_0048_S-303.dgn

THE INFORMATION, INCLUDING ESTIMATED QUANTITIES OF WORK, SHOWN ON THESE SHEETS IS BASED ON LIMITED INVESTIGATIONS BY THE STATE AND IS IN NO WAY WARRANTED TO INDICATE THE CONDITIONS OF ACTUAL QUANTITIES OF WORK WHICH WILL BE REQUIRED.

Date Plotted: October 01, 2014

DESIGNER/DRAFTER: KR-M
CHECKED BY: MDD
SCALE AS NOTED

STATE OF CONNECTICUT
DEPARTMENT OF TRANSPORTATION

ENGINEER: BAKER ENGINEERING
APPROVED BY:
DATE:

STATE OF CONNECTICUT · DAVID M. DEBERARDINO · No. 18078 · LICENSED PROFESSIONAL ENGINEER

PROJECT TITLE: SHORE LINE EAST RAILROAD STATIONS

TOWN: CLINTON

DRAWING TITLE: CANOPY FRAMING DETAILS - 2

PROJECT NO. 310-0059
DRAWING NO. S-303
SHEET NO. 06.24

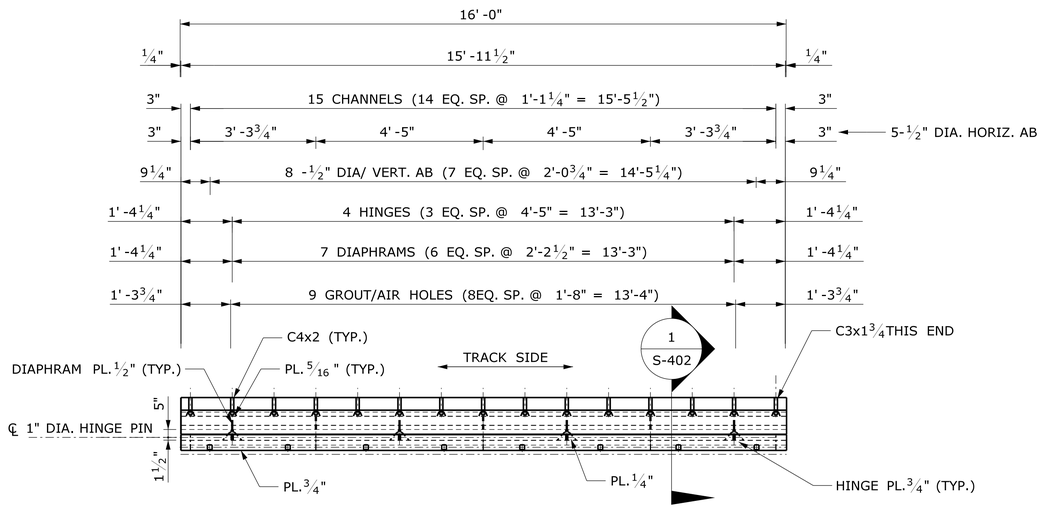

FOLD UP PLATFORM EDGE LAYOUT PLAN - 16FT SEGMENT (2 / S-401)

SCALE: ½"=1'-0"

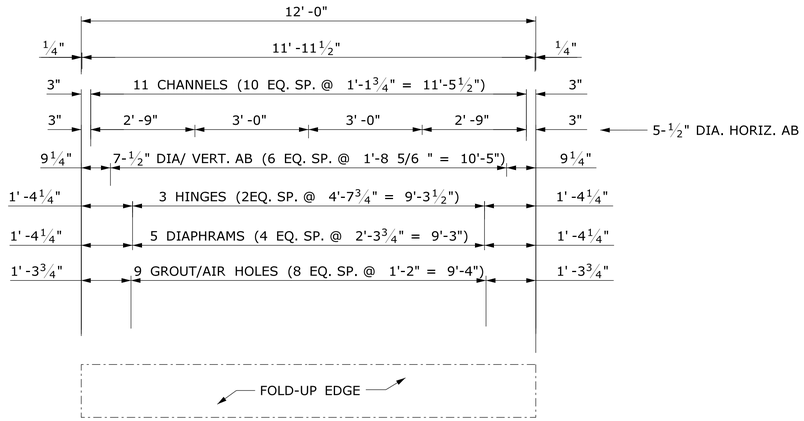

NOTE:
REFER TO PLATFORM FRAMING PLAN S-103 FOR MISSING INFORMATION.

FOLD UP PLATFORM EDGE LAYOUT PLAN - 12FT SEGMENT (3 / S-401)

SCALE: ½"=1'-0"

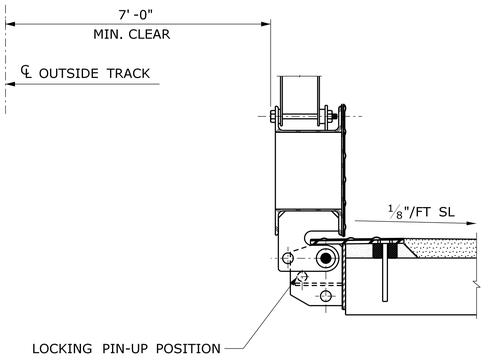

ROTATED 90°

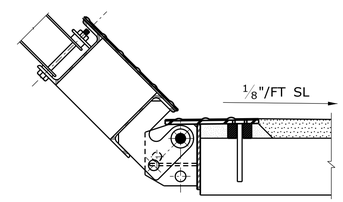

ROTATED 45°

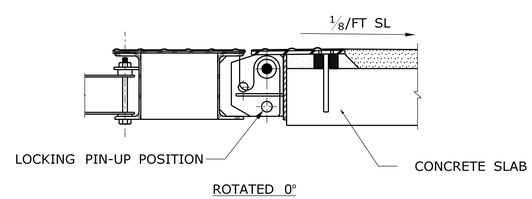

ROTATED 0°

NOTE:

THE FOLD-UP EDGE DESIGN ARE BASED ON A FOLD-UP EDGE PRODUCT BY ADA FABRICATORS, INC. U.S. PATENT # 5,517,921. REFER TO SPECIFICATIONS FOR MORE INFORMATION.

FOLD UP PLATFORM EDGE DETAILS (1 / S-401)

SCALE: NTS

FOLD-UP EDGE NOTES:

1. THE FOLD-UP EDGE SHALL BE A RETRACTABLE EDGE, AS MANUFACTURED BY ADA SOULTIONS, INC. 10 ELIZABETH DR #5, CHELMSFORD, MA 01824, 800-372-0519. THIS IS A SOLE SOURCE ITEM AND NO SUBSTITUIONS WILL BE ALLOWED.
2. THE FOLD-UP EDGE DETAILED ON THIS DWG INCLUDES THE STEEL ANCHOR PLATE ASSEMBLY, THE ALUMINUM FOLD-UP EDGE AND BREAKAWAY FOAM NOSING.
3. MATERIAL SPECIFICATIONS:
   A. CARBON STEEL PLATE: ASTM A36
   B. ALUMINUM CHANNELS: ASTM B308/6061- T6 ALLOY (ALUMINUM ASSOCIATION)
   C. ALUMINUM PLATES: ASTM B209/6061- T6 ALLOY
   D. STAINLESS STEEL PLATES: ASTM A167
   E. ALUMINUM PIPE: ASTM B210 / 2011-T3 (HOLLOW SCREW MACHINE STOCK)
   F. STAINLESS STEEL FASTENERS: ASTM F593 TYPE 304
   G. STAINLESS STEEL NUTS: ASTM F594
   H. BREAKAWAY FOAM NOSING: HS 900 (9.5 CF AVG.) CLOSED-CELL HYDROPHOBIC POLYETHYLENE FOAM
   I. STAINLESS HAS ROD MATERIAL SHALL CONFORM DIMENSIONAL REQUIREMENT CONDITION CW ⅜" TO ⅝".
   J. STAINLESS STEEL NUTS SHALL MEET ASTM F594
   K. STAINLESS STEEL WASHER SHALL CONFORM DIMENSIONAL REQUIREMENTS OF ANSI B18.22.1, TYPE A PLAIN.
   L. ADHESIVE CAPSULE SHALL CONSIST OF A DUAL CHAMBER FOIL CAPSULE. THE RESIN MATERIAL SHALL BE VINYL URETHANE METHACRYLATE WITH DIBENZOYL PEROXIDE HARDENER.
   M. PERFORATED TACTILE EDGE SURFACE: 0.10 INCH THICK ARMOR TILE BY ENGINEERING PLASTICS, INC. OR APPROVED EQUAL.
4. ALL WELDING OF ALUMINUM SHALL BE BY THE GTAW PROCESS ACCORDING TO AWS DI.2.
5. ALL WELDING OF CARBON STEEL SHALL BE ACCORDING TO AWS DI.I.
6. ANCHOR PLATE ASSEMBLIES SHALL BE HOT DIP GALVANIZED AFTER FABRICATION. SHOP ASSEMBLE EACH FOLD-UP EDGE AND ANCHOR PLATE ASSEMBLY AFTER GALVANIZING TO VERIFY FIT-UP AND PROPER OPERATION PRIOR TO SHIPMENT.
7. SPARE PARTS: PROVIDE ONE COMPLETE SPARE SET (6 PIECES) OF BREAKAWAY FOAM NOSING.
8. PREFORMED TACTILE EDGE SURFACE SHALL BE ADHERED AND MECHANICALLY ANCHORED TO FOLD-UP EDGE AND ANCHOR PLATE ASSEMBLY IN ACCORDANCE WITH MANUFACTURER'S INSTRUCTIONS.
9. SEE DWG. NO. S-103 FOR FOLD-UP EDGE LAYOUT.

FOLD-UP EDGE INSTALLATION PROCEDURE:

1. POSITION AND ALIGN STEEL ANCHOR PLATE ASSEMBLY AND MARK VERTICAL AND HORIZONTAL HOLES FOR DRILLING. REMOVE PLATE ASSEMBLY, DRILL ALL HOLES FOR ANCHOR BOLTS AND INSTALL HORIZONTAL ANCHOR BOLTS.
2. INSTALL ANCHOR PLATE ASSEMBLY IN FINAL POSITION AND TIGHTEN NUTS ON HORIZONTAL ANCHOR BOLTS. INSTALL VERTICAL ANCHOR BOLTS. GROUT BENEATH STEEL PLATE WITH NON-SHRINK GROUT. AFTER 24 HOURS TIGHTEN NUTS ON VERTICAL ANCHOR BOLTS AND CUT OFF ANCHOR BOLTS FLUSH WITH PLATE.
3. INSTALL FOLD-UP EDGE BY ALIGNING HOLES AND INSERTING THE 1" DIA. HINGE PINS. POSITION FOLD-UP EDGE TO CROSS SLOPE SHOWN, SO THAT TOP OF PLATFORM IS PARALLEL TO TOP OF CONCRETE SLAB. VERIFY HORIZONTAL AND VERTICAL TRACK CLEARANCES. HOLD THIS POSITION AND INSERT SHIM STOPS BEHIND EACH HINGE PLATE. GRIND TO FIT WHERE NECESSARY. TACK WELD SHIM STOPS IN PLACE. DRILL HOLE IN HINGE PLATE FOR LOCKING PIN AND INSTALL LOCKING PIN (PROVIDE ONE LOCKING PIN FOR EACH SEGMENT).
4. INSTALL 9" WIDE FOAM NOSING ON TOP OF SUPPORT CHANNELS. FASTEN NOSING TO CHANNELS BY BENDING OVER TABS PASSING THROUGH SLOTS OF TOP FLANGE OF CHANNEL.
5. INSTALL PREFORMED TACTILE EDGE SURFACE IN ACCORDANCE WITH MANUFACTURER'S INSTALLATION INSTRUCTIONS; VERIFY OPERATION OF FOLD-UP.

ANCHOR BOLT NOTES

1. ANCHOR BOLT SYSTEM:
   ALL INSTALLATION, SIZE OF HOLE, DEPTH OF HOLE ETC. SHALL BE IN ACCORDANCE WITH MANUFACTURER'S INSTALLATION INSTRUCTIONS. THE ANCHOR BOLT SYSTEM SHALL CONSIST OF ½" DIA. STAINLESS STEEL ANCHOR BOLTS WITH A ADHESIVE BONDING MATERIAL, THE ANCHOR BOLT SYSTEM SHALL PROVIDE A MIN. WORKING TENSILE STRENGTH OF 2000 LBS AND A SHEAR STRENGTH OF 1500 LBS FOR THE HORIZONTAL ANCHOR BOLT AND 1900 LBS FOR THE VERTICAL ANCHOR BOLTS. WORKING LOAD = ALLOWABLE WORKING LOAD TIMES THE APPROPRIATE ADJUSTMENT FACTORS FOR SPACING AND EDGE DISTANCE.
2. INSTALLATION PROCEDURE:
   ALL INSTALLATION, SIZE OF HOLE, DEPTH OF HOLE ETC. SHALL BE IN ACCORDANCE WITH MANUFACTURER'S INSTALLATION INSTRUCTIONS.

REV.	DATE	REVISION DESCRIPTION	SHEET NO.

Filename: FD_MSH_STR_0027_0048_S-401.dgn

THE INFORMATION, INCLUDING ESTIMATED QUANTITIES OF WORK, SHOWN ON THESE SHEETS IS BASED ON LIMITED INVESTIGATIONS BY THE STATE AND IS IN NO WAY WARRANTED TO INDICATE THE CONDITIONS OF ACTUAL QUANTITIES OF WORK WHICH WILL BE REQUIRED.

Date Plotted: October 01, 2014

DESIGNER/DRAFTER: KR-M
CHECKED BY: MDD
SCALE AS NOTED

STATE OF CONNECTICUT
DEPARTMENT OF TRANSPORTATION

ENGINEER: BAKER ENGINEERING
APPROVED BY:
DATE:

PROJECT TITLE: SHORE LINE EAST RAILROAD STATIONS

TOWN: CLINTON

DRAWING TITLE: PLATFORM FOLD UP EDGE DETAILS - 1

PROJECT NO. 310-0059
DRAWING NO. S-401
SHEET NO. 06.25

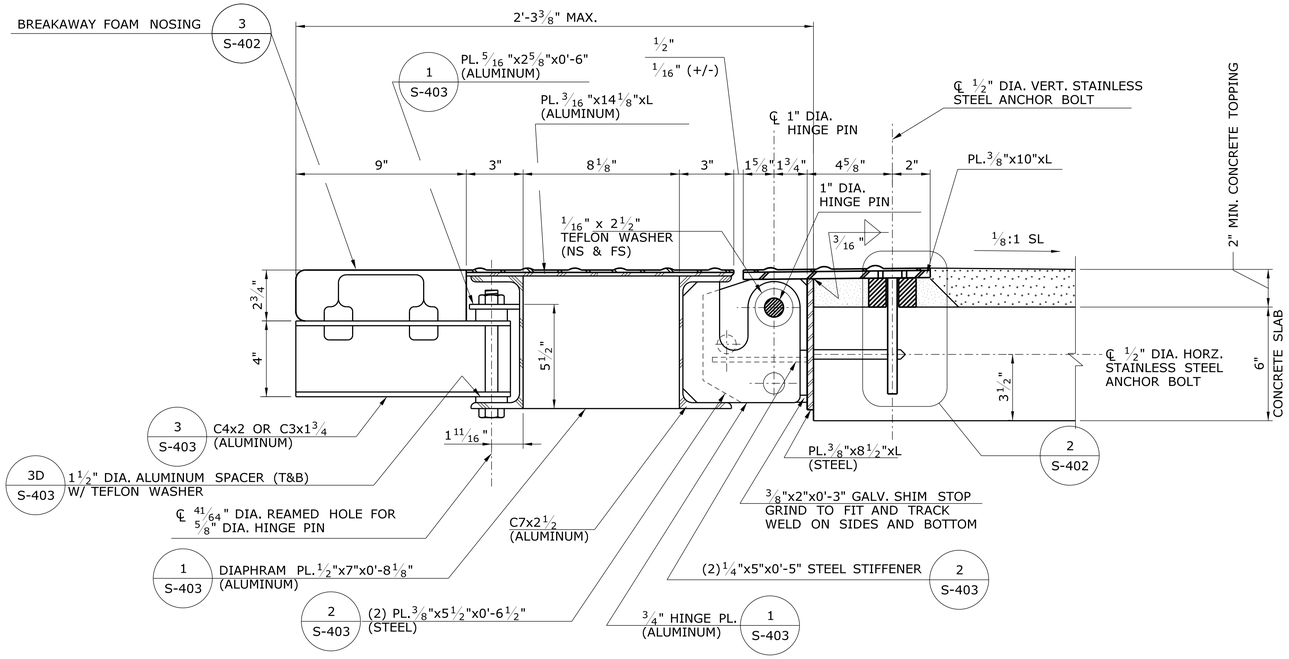

SECTION - FOLD UP PLATFORM EDGE 1 S-201 | 1 S-401 | 1 A-510

SCALE: 6"=1'-0"

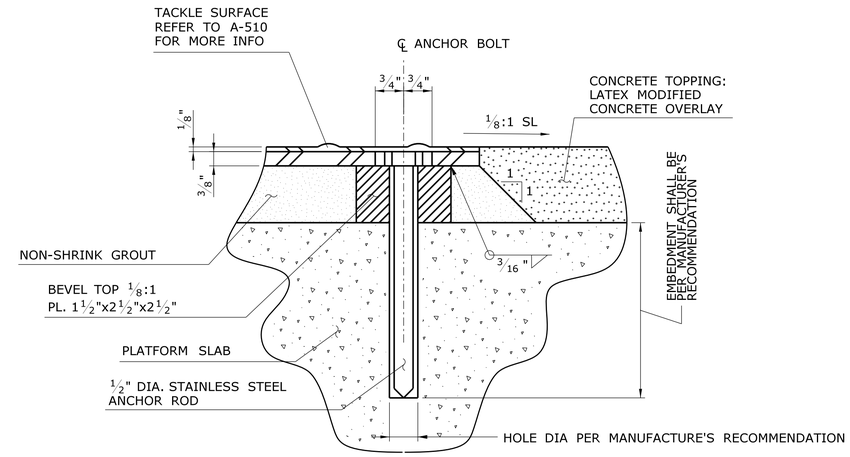

DETAIL - EMBEDDED PIN 2 S-402

SCALE: 6"=1'-0"

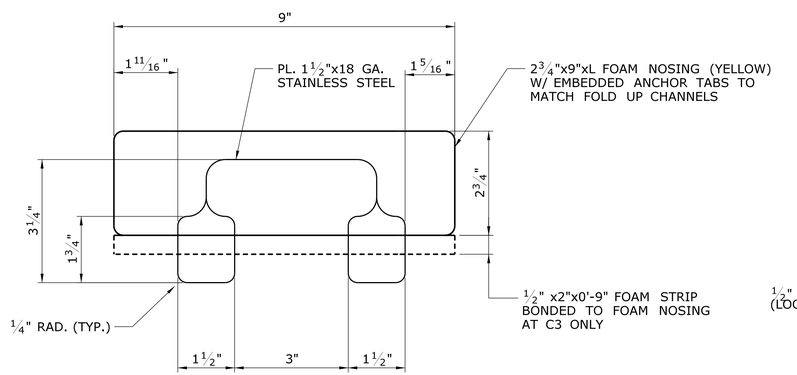

DETAIL - BREAKAWAY FOAM NOSING 3 S-402

SCALE: 3/4"=1'-0"

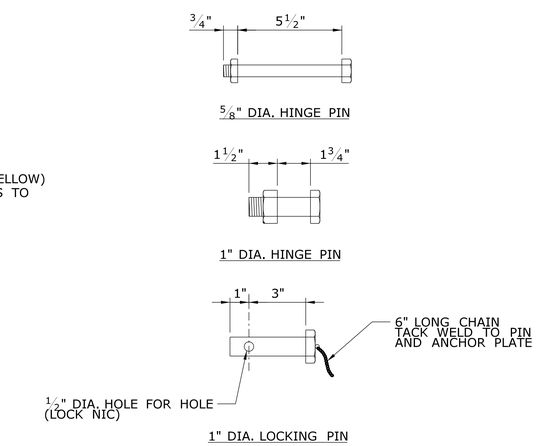

PIN NOTES:

1. ALL PINS AND NUTS SHALL BE STAINLESS STEEL.
2. HINGE PINS SHALL HAVE POLISHED SHANKS.
3. NO THREADS IN SHEAR PLANES.
4. PROVIDE ONE LOCKING PIN FOR EACH SEGMENT OF FOLD-UP EDGE.

PIN DETAILS 4 S-402

SCALE: 3"=1'-0"

REV.	DATE	REVISION DESCRIPTION	SHEET NO.

Filename: FD_MSH_STR_0027_0048_S-402.dgn

THE INFORMATION, INCLUDING ESTIMATED QUANTITIES OF WORK, SHOWN ON THESE SHEETS IS BASED ON LIMITED INVESTIGATIONS BY THE STATE AND IS IN NO WAY WARRANTED TO INDICATE THE CONDITIONS OF ACTUAL QUANTITIES OF WORK WHICH WILL BE REQUIRED.

Date Plotted: October 01, 2014

DESIGNER/DRAFTER: KR-M

CHECKED BY: MDD

SCALE AS NOTED

STATE OF CONNECTICUT
DEPARTMENT OF TRANSPORTATION

ENGINEER: BAKER ENGINEERING

APPROVED BY: DATE:

PROJECT TITLE: SHORE LINE EAST RAILROAD STATIONS

TOWN: CLINTON

DRAWING TITLE: PLATFORM FOLD UP EDGE DETAILS - 2

PROJECT NO. 310-0059

DRAWING NO. S-402

SHEET NO. 06.26

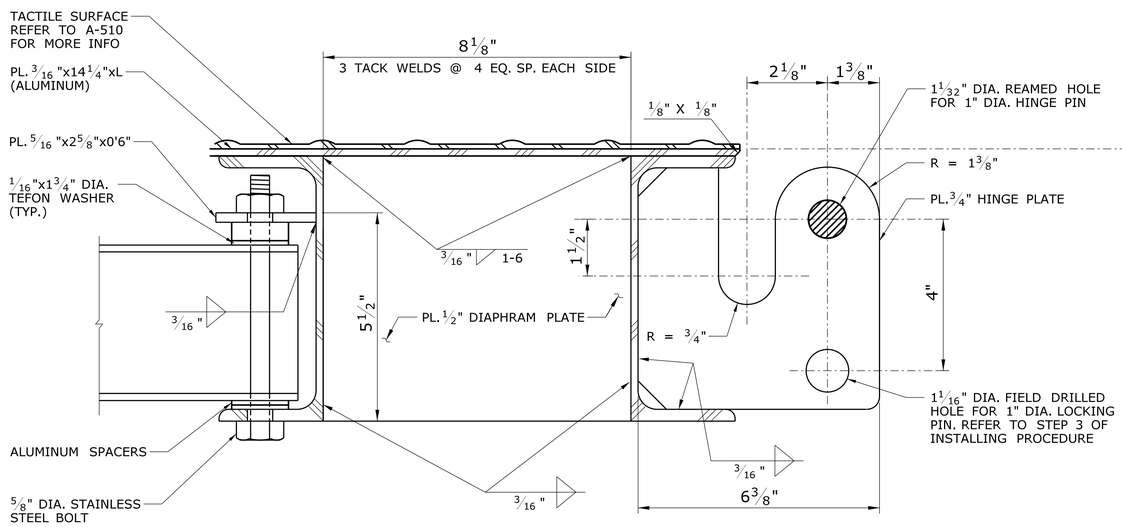

DETAIL - ALUMINUM HINGE PLATE ASSEMBLY 1 / S-402

SCALE: 6"=1'-0"

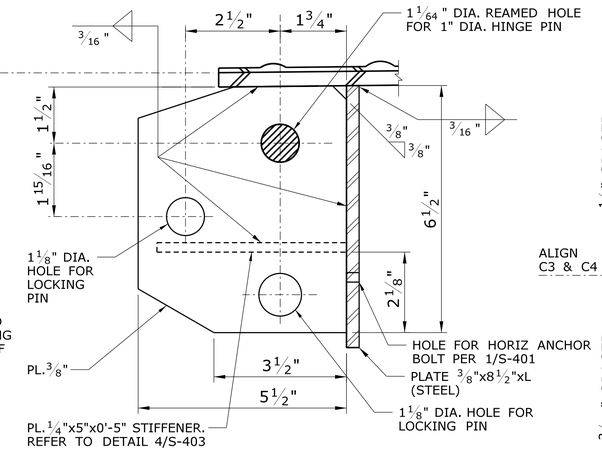

DETAIL - STEEL ANCHOR PLATE 2 / S-402

SCALE: 6"=1'-0"

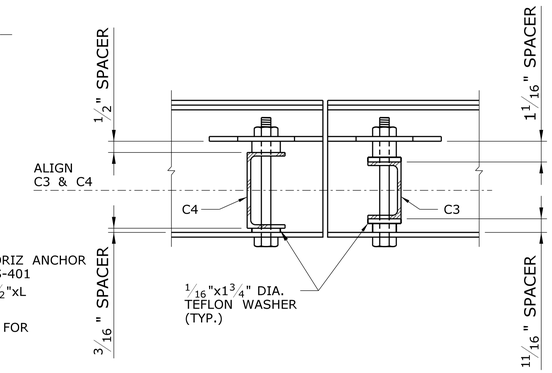

SECTION DETAIL 3D / S-403

SCALE: 3"=1'-0"

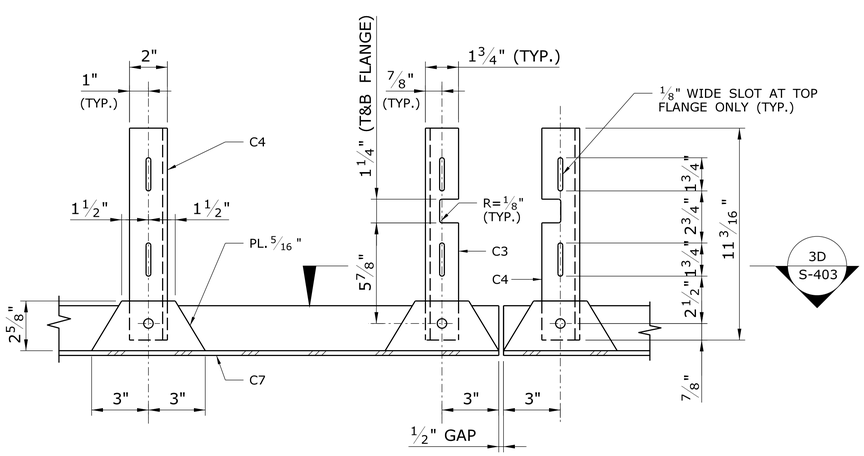

PLAN DETAIL 3 / S-402

SCALE: 3"=1'-0"

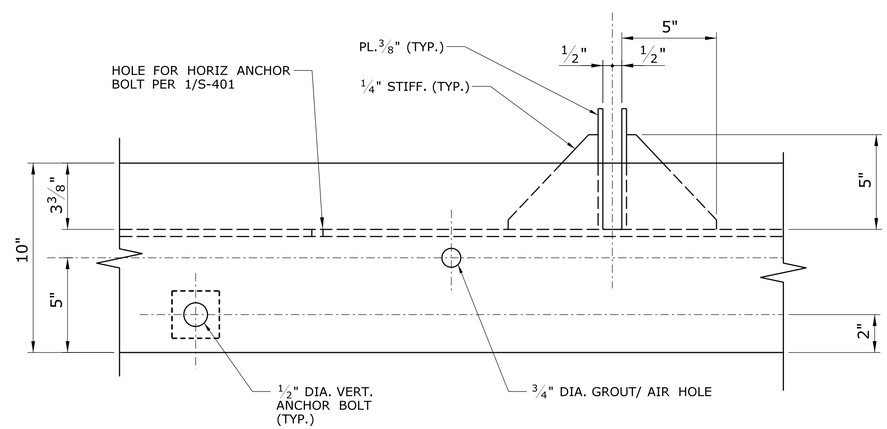

PLAN DETAIL 4 / S-403

SCALE: 3"=1'-0"

NOTES:

REFER TO DWG S-401 FOR FOLD-UP EDGE NOTES AND INSTALLATION.

REV.	DATE	REVISION DESCRIPTION	SHEET NO.

Filename: FD_MSH_STR_0027_0048_S-403.dgn

THE INFORMATION, INCLUDING ESTIMATED QUANTITIES OF WORK, SHOWN ON THESE SHEETS IS BASED ON LIMITED INVESTIGATIONS BY THE STATE AND IS IN NO WAY WARRANTED TO INDICATE THE CONDITIONS OF ACTUAL QUANTITIES OF WORK WHICH WILL BE REQUIRED.

Date Plotted: October 01, 2014

DESIGNER/DRAFTER: KR-M

CHECKED BY: MDD

SCALE AS NOTED

STATE OF CONNECTICUT
DEPARTMENT OF TRANSPORTATION

ENGINEER: BAKER ENGINEERING

APPROVED BY: DATE:

PROJECT TITLE: SHORE LINE EAST RAILROAD STATIONS

TOWN: CLINTON

DRAWING TITLE: PLATFORM FOLD UP EDGE DETAILS - 3

PROJECT NO. 310-0059

DRAWING NO. S-403

SHEET NO. 06.27

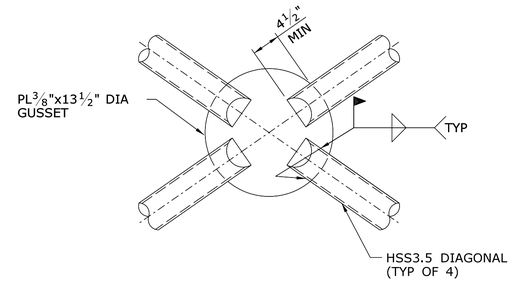

TYP VERT. DIAGONAL DTL. AT CENTER SUPPORT — 1 / S-105 — 1 / S-107

SCALE: 1 1/2"=1'-0"

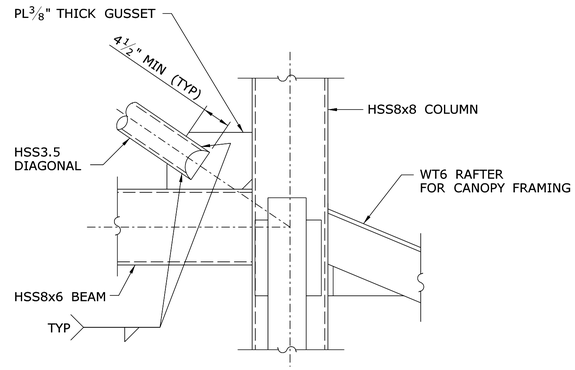

SECTION - DIAGONAL TO COLUMN/BEAM INTERSECTION — 2 / S-105

SCALE: 1 1/2"=1'-0"

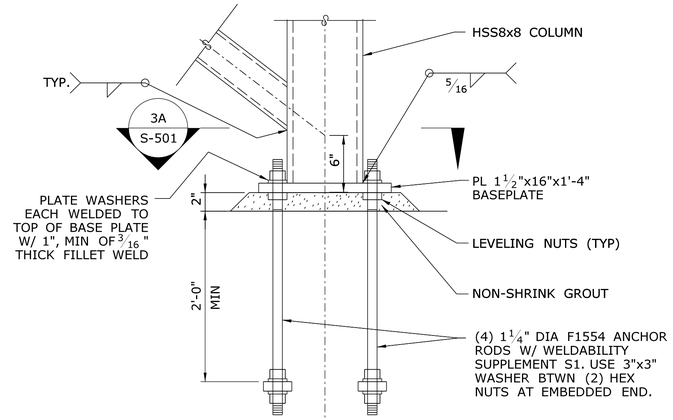

BASE PLATE SECTION — 3 / S-501

SCALE: NTS

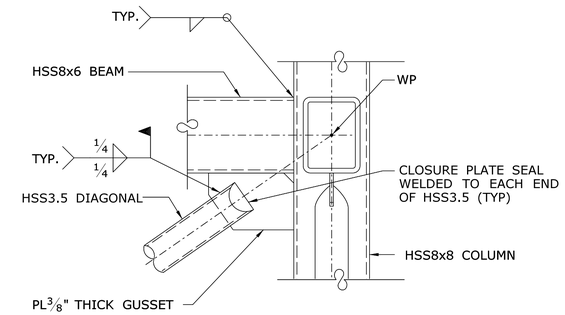

TYP STAIR END ELEVATION — 4 / S-105

SCALE: 1 1/2"=1'-0"

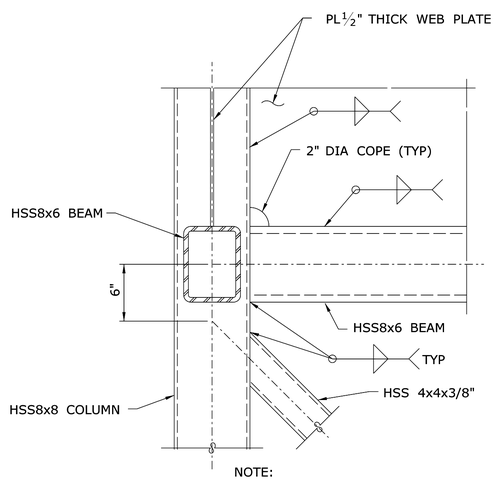

NOTE:
C12X30 FOR ELEVATOR
NOT SHOWN FOR CLARITY

TYP ELEVATOR TOWER CONNECTION — 5 / S-105

SCALE: 1 1/2"=1'-0"

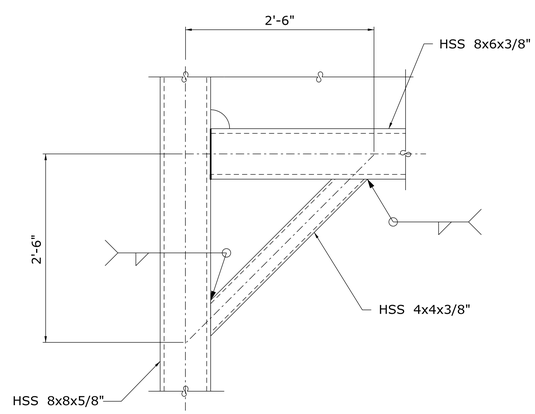

TYPICAL CONNECTION DETAIL — 6 / S-105

SCALE: 1"=1'-0"

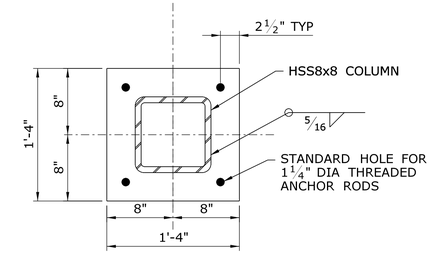

NOTE:
ALL ANCHOR RODS, NUTS, WASHERS AND BASE PLATE TO BE GALV.

BASE PLATE DETAIL — 3A / S-501

SCALE: NTS

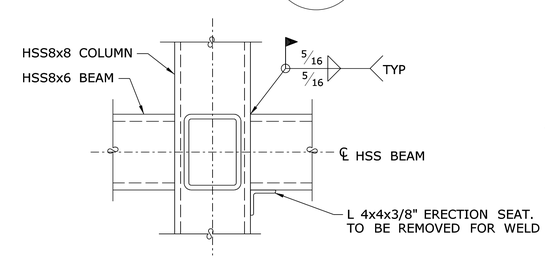

TYP FIELD CONNECTION DETAIL — 7 / S-105

SCALE: 1 1/2"=1'-0"

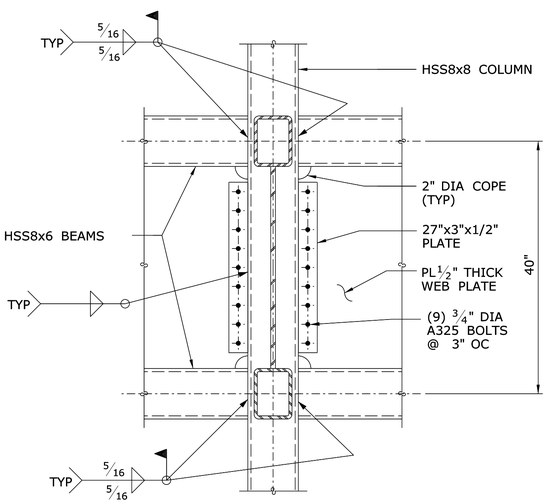

TYP FIELD CONNECTION DETAIL — 8 / S-105

SCALE: 1"=1'-0"

NOTES:

1. REFER TO GENERAL NOTES, KEYS, AND ABBREVIATIONS AND SPECIFICATIONS FOR MORE INFO.
2. ALL HSS3.5 OR HSS4.5 TO HAVE 1/8" CLOSURE PLATE SEAL WELDED TO PIPE END.
3. ALL WELDS SHALL BE 1/4" THICK FILLET WELDS, UNO.
4. ALL STRUCTURAL STEEL TO BE THERMAL SPRAYED METALIZED FINISH.
5. ALL STEEL CONNECTION FASTENERS TO BE GALVANIZED. REFER TO SPECIFICATIONS FOR MORE INFORMATION.

REV.	DATE	REVISION DESCRIPTION	SHEET NO.

Filename: FD_MSH_STR_0027_0059_S-501.dgn

THE INFORMATION, INCLUDING ESTIMATED QUANTITIES OF WORK, SHOWN ON THESE SHEETS IS BASED ON LIMITED INVESTIGATIONS BY THE STATE AND IS IN NO WAY WARRANTED TO INDICATE THE CONDITIONS OF ACTUAL QUANTITIES OF WORK WHICH WILL BE REQUIRED.

Date Plotted: October 01, 2014

DESIGNER/DRAFTER: MDD/KR-M
CHECKED BY: MDD
SCALE AS NOTED

STATE OF CONNECTICUT
DEPARTMENT OF TRANSPORTATION

ENGINEER: BAKER ENGINEERING
APPROVED BY:
DATE:

PROJECT TITLE: SHORE LINE EAST RAILROAD STATIONS

TOWN: CLINTON

DRAWING TITLE: TOWER SUPERSTRUCTURE SECTIONS & DETAILS - 1

PROJECT NO. 310-0059
DRAWING NO. S-501
SHEET NO. 06.28

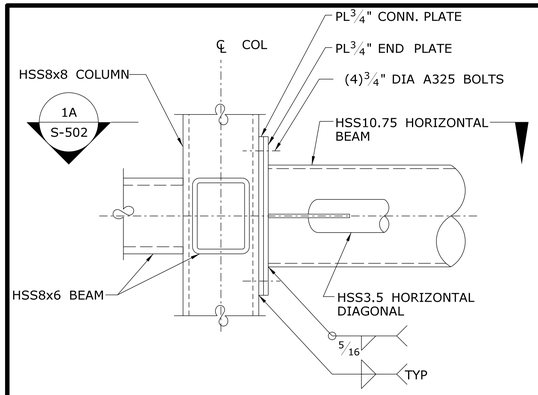

TYP CONNECTION DETAIL 1 / S-105
SCALE: 1½" =1'-0"

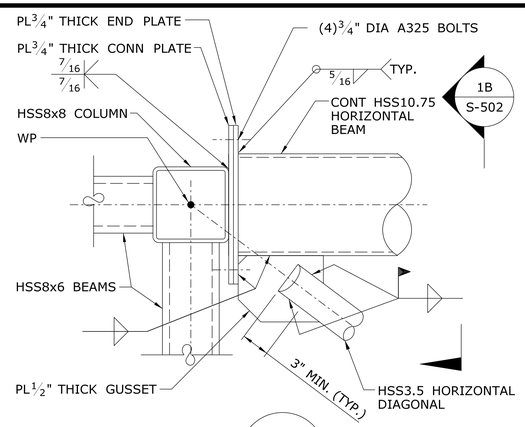

PLAN DETAIL 1A / S-502
SCALE: 1½" =1'-0"

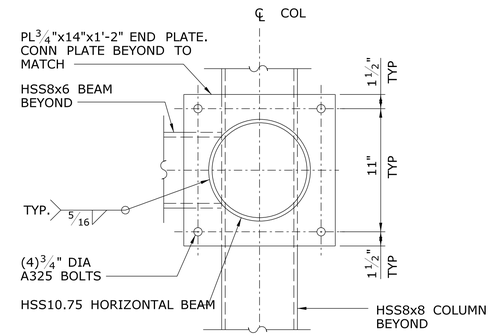

DETAIL 1B / S-502
SCALE: 1½" =1'-0"

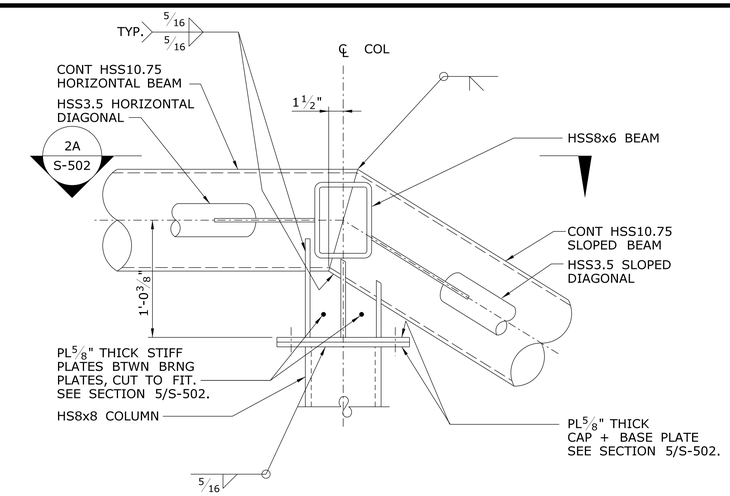

TYP CONNECTION DETAIL 2 / S-105
SCALE: 1½" =1'-0"

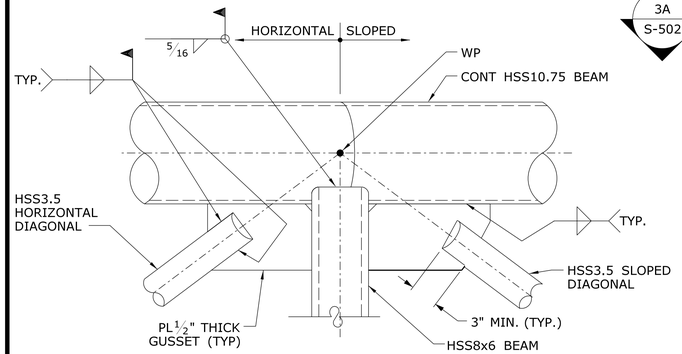

PLAN DETAIL 2A / S-502
SCALE: 1½" =1'-0"

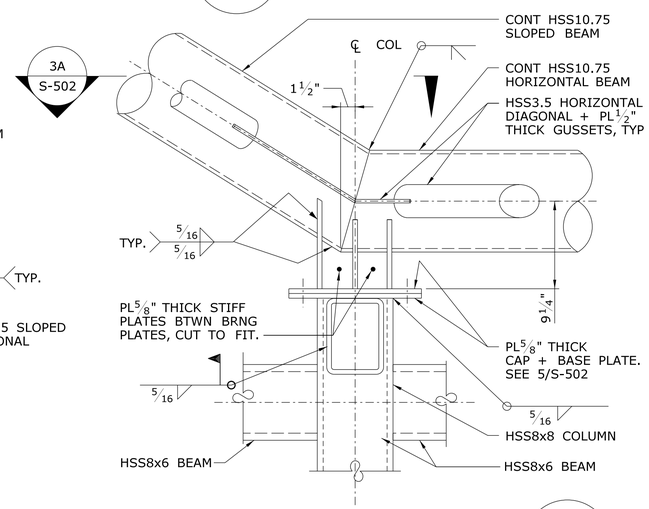

TYP CONNECTION DETAIL 3 / S-105
SCALE: 1½" =1'-0"

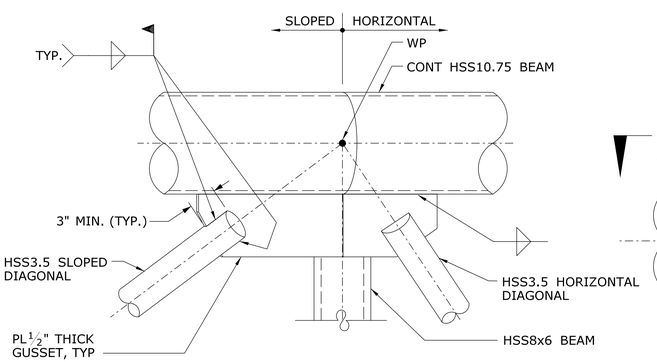

PLAN DETAIL 3A / S-502
SCALE: 1½" =1'-0"

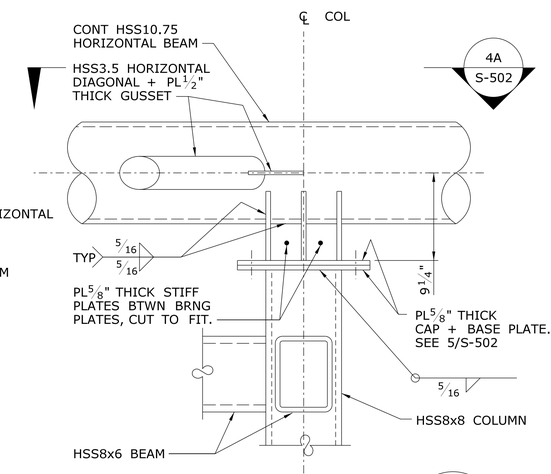

TYP CONNECTION DETAIL 4 / S-105
SCALE: 1½" =1'-0"

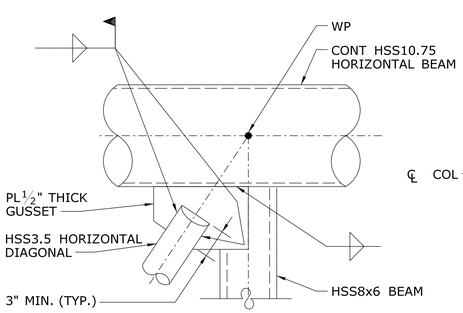

PLAN DETAIL 4A / S-502
SCALE: 1½" =1'-0"

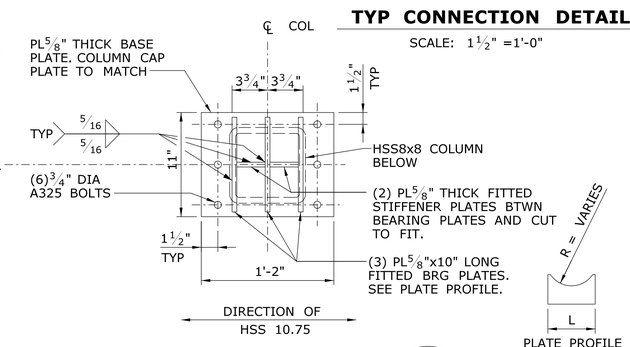

TOP VIEW OF BEARING 5 / S-502
SCALE: 1½" =1'-0"

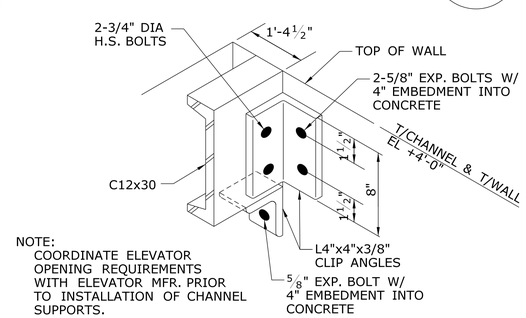

NOTE:
COORDINATE ELEVATOR OPENING REQUIREMENTS WITH ELEVATOR MFR. PRIOR TO INSTALLATION OF CHANNEL SUPPORTS.

DETAIL 6 / S-105
SCALE: NTS

NOTES:

1. REFER TO GENERAL NOTES, KEYS, AND ABBREVIATIONS AND SPECIFICATIONS FOR MORE INFO.
2. ALL HSS3.5 OR HSS4.5 TO HAVE ⅛" CLOSURE PLATE SEAL WELDED TO PIPE END.
3. ALL WELDS SHALL BE ¼" THICK FILLET WELDS, UON.
4. ALL STRUCTURAL STEEL TO BE THERMAL SPRAYED METALIZED FINISH.
5. ALL STEEL CONNECTION FASTENERS TO BE GALVANIZED. REFER TO SPECIFICATIONS FOR MORE INFORMATION.

REV.	DATE	REVISION DESCRIPTION	SHEET NO.

Filename: FD_MSH_STR_0027_0059_S-502.dgn

THE INFORMATION, INCLUDING ESTIMATED QUANTITIES OF WORK, SHOWN ON THESE SHEETS IS BASED ON LIMITED INVESTIGATIONS BY THE STATE AND IS IN NO WAY WARRANTED TO INDICATE THE CONDITIONS OF ACTUAL QUANTITIES OF WORK WHICH WILL BE REQUIRED.

Date Plotted: October 01, 2014

DESIGNER/DRAFTER:
CHECKED BY: MDD
SCALE AS NOTED

STATE OF CONNECTICUT
DEPARTMENT OF TRANSPORTATION

ENGINEER: BAKER ENGINEERING
APPROVED BY:
DATE:

PROJECT TITLE: SHORE LINE EAST RAILROAD STATIONS

TOWN: CLINTON

DRAWING TITLE: TOWER SUPERSTRUCTURE SECTIONS & DETAILS - 2

PROJECT NO. 310-0059
DRAWING NO. S-502
SHEET NO. 06.29

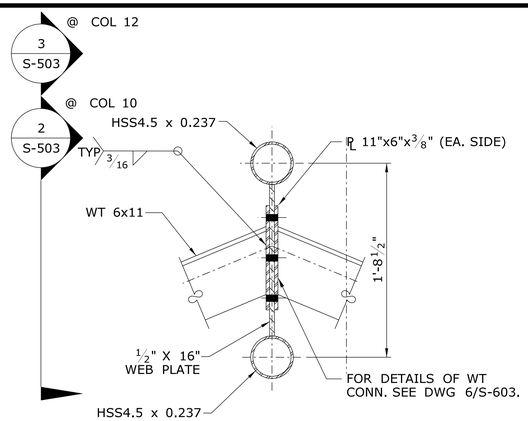

WT/RIDGE BEAM CONN. DETAIL 1 / S-105 | 1 / S-106

SCALE: 1½" =1'-0"

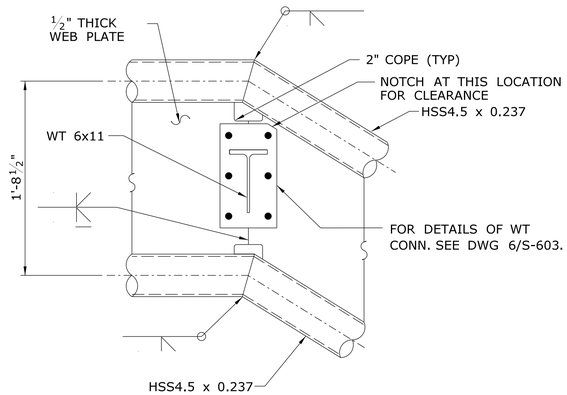

TYPICAL CONNECTION DETAIL 2 / S-106

SCALE: 1½" =1'-0"

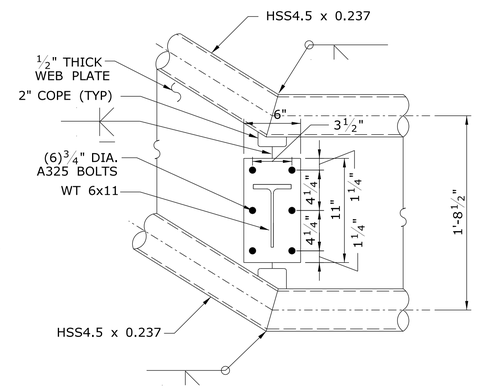

TYPICAL CONNECTION DETAIL 3 / S-106

SCALE: 1½" =1'-0"

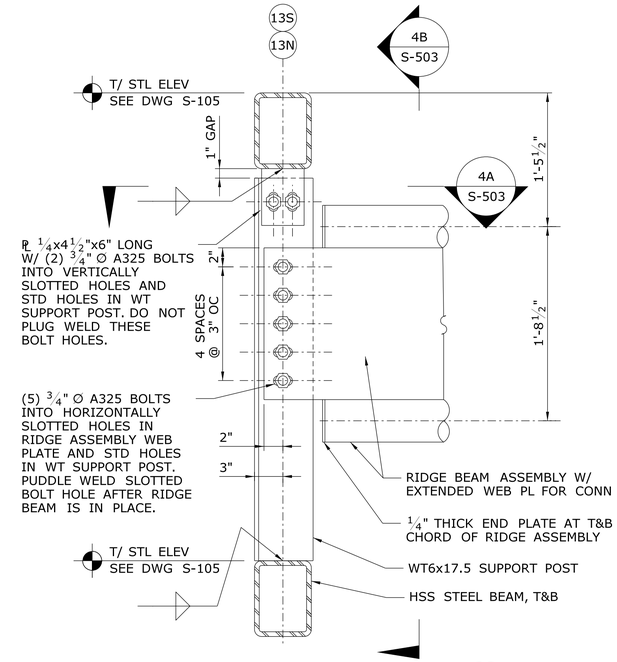

SECTION AT TOWER RIDGE ASSEMBLY SUPPORT 4 / S-106

SCALE: 1½" =1'-0"

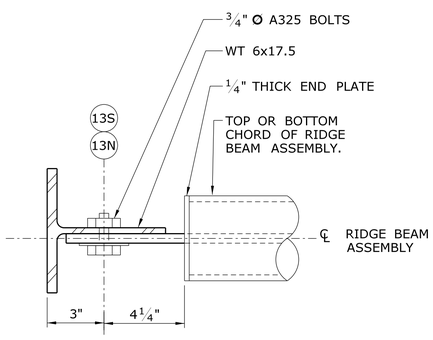

PLAN DETAIL 4A / S-503

SCALE: 1½" =1'-0"

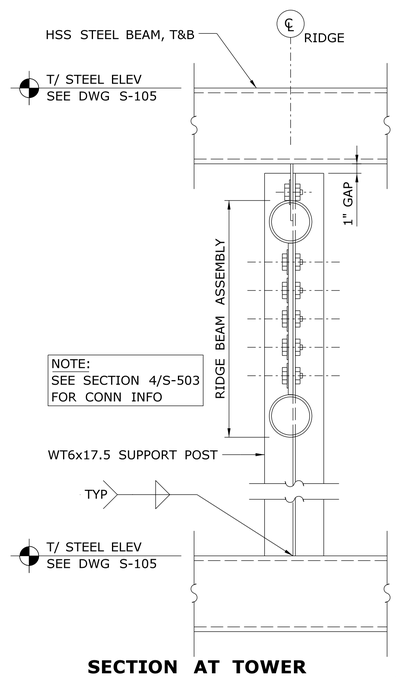

SECTION AT TOWER RIDGE ASSEMBLY SUPPORT 4B / S-503

SCALE: 1½" =1'-0"

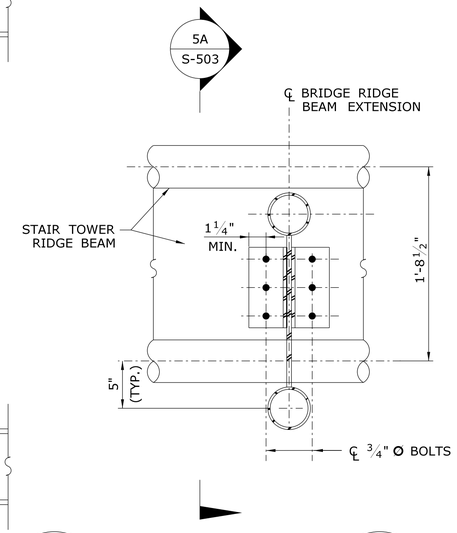

DETAIL 5 / S-106

SCALE: 1½" =1'-0"

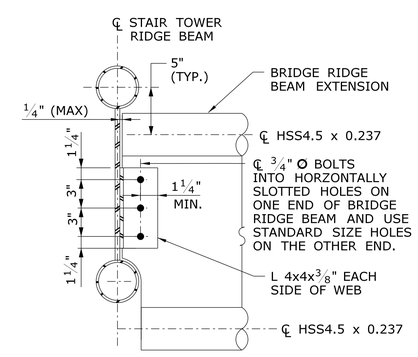

DETAIL 5A / S-503

SCALE: 1½" =1'-0"

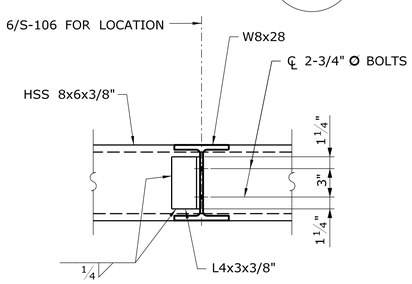

HOIST BEAM CONNECTION DETAIL 6 / S-105

SCALE: 1½" =1'-0"

NOTES:

1. REFER TO GENERAL NOTES, KEYS, ABBREVIATIONS, AND SPECIFICATIONS FOR MORE INFO.
2. ALL HSS3.5 OR HSS4.5 TO HAVE ⅛" CLOSURE PLATE SEAL WELDED TO PIPE END.
3. ALL WELDS SHALL BE ¼" THICK FILLET WELDS UNLESS NOTED OTHERWISE.
4. STRUCTURAL STEEL TO BE THERMAL SPRAY METALLIZED WHERE INDICATED IN THE SPECS.

REV.	DATE	REVISION DESCRIPTION	SHEET NO.

Filename: FD_MSH_STR_0027_0059_S-503.dgn

THE INFORMATION, INCLUDING ESTIMATED QUANTITIES OF WORK, SHOWN ON THESE SHEETS IS BASED ON LIMITED INVESTIGATIONS BY THE STATE AND IS IN NO WAY WARRANTED TO INDICATE THE CONDITIONS OF ACTUAL QUANTITIES OF WORK WHICH WILL BE REQUIRED.

Date Plotted: October 01, 2014

DESIGNER/DRAFTER: MDD/KR-M
CHECKED BY: MDD
SCALE AS NOTED

STATE OF CONNECTICUT
DEPARTMENT OF TRANSPORTATION

ENGINEER: BAKER ENGINEERING
APPROVED BY:
DATE:

PROJECT TITLE: SHORE LINE EAST RAILROAD STATIONS

TOWN: CLINTON

DRAWING TITLE: TOWER SUPERSTRUCTURE SECTIONS & DETAILS - 3

PROJECT NO. 310-0059
DRAWING NO. S-503
SHEET NO. 06.30

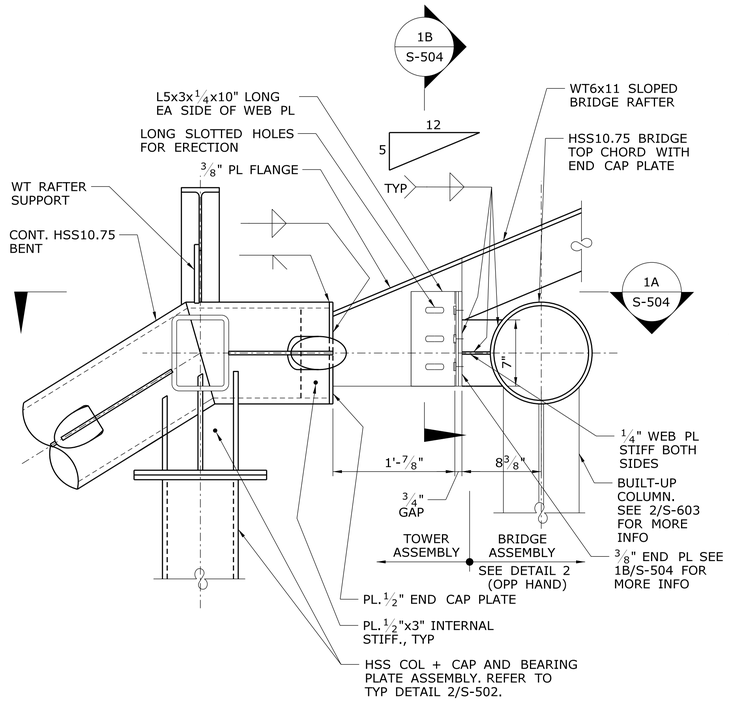

BRIDGE BRACING AT STAIR — 1 / S-106

SCALE: 1 1/2" =1'-0"

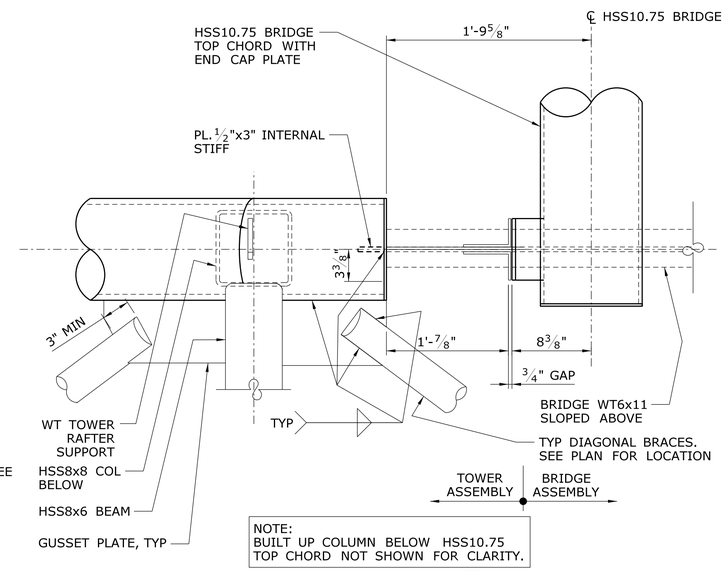

DETAIL — 1A / S-504

SCALE: 1 1/2" =1'-0"

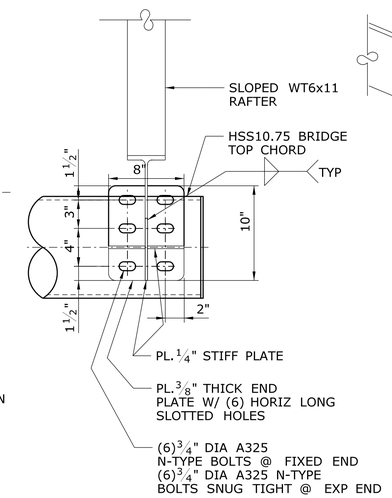

SECTION — 1B / S-504

SCALE: 1 1/2" =1'-0"

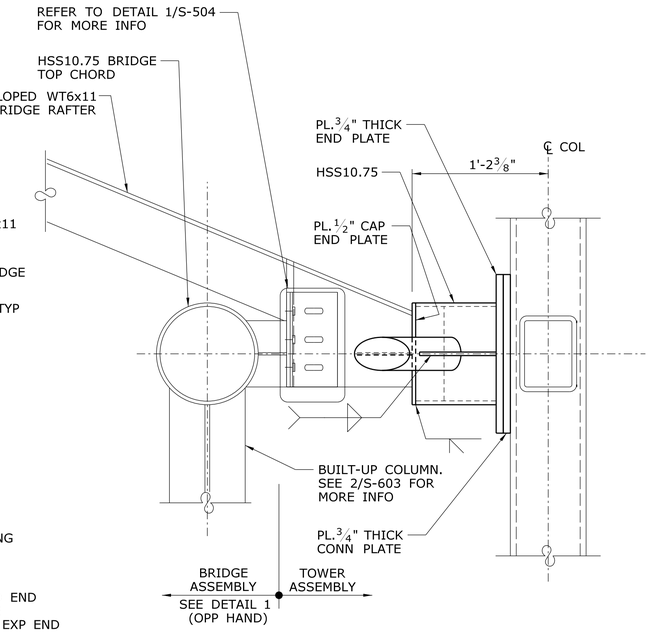

BRIDGE BRACING AT ELEVATOR — 2 / S-106

SCALE: 1 1/2" =1'-0"

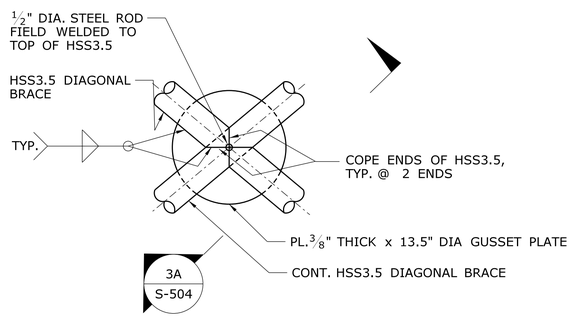

STAIR LATERAL HORIZONTAL BRACING DETAIL — 3 / S-106

SCALE: 1 1/2" =1'-0"

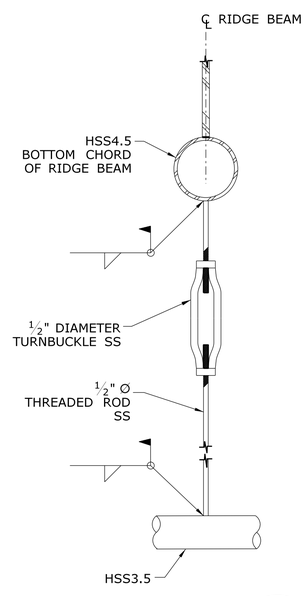

SECTION — 3A / S-504

SCALE: 1 1/2" =1'-0"

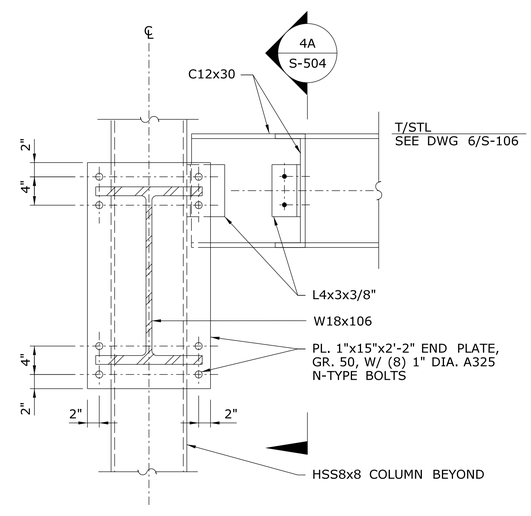

TYPICAL CONNECTION DETAIL — 4 / S-106

SCALE: 1 1/2" =1'-0"

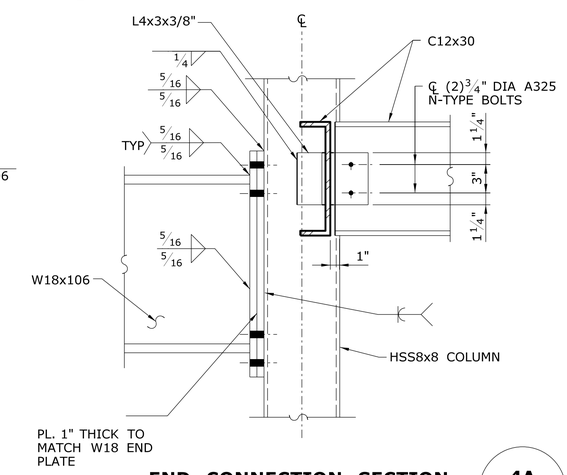

END CONNECTION SECTION — 4A / S-504

SCALE: 1 1/2" =1'-0"

NOTES:

1. REFER TO GENERAL NOTES, KEYS, AND ABBREVIATION AND SPECIFICATIONS FOR MORE INFO.
2. ALL HSS3.5 OR HSS4.5 TO HAVE 1/8" CLOSURE PLATE SEAL WELDED TO PIPE END.
3. ALL WELDS SHALL BE 1/4" THICK FILLET WELDS UNLESS NOTED OTHERWISE.
4. ALL BRIDGE STUCTURAL STEEL TO BE THERMAL SPRAY METALLIZED FINISH. ALL STEEL CONN FASTENERS TO BE GALVANIZED. REFER TO SPECS FOR MORE INFO.

REV.	DATE	REVISION DESCRIPTION	SHEET NO.

Filename: FD_MSH_STR_0027_0059_S-504.dgn

THE INFORMATION, INCLUDING ESTIMATED QUANTITIES OF WORK, SHOWN ON THESE SHEETS IS BASED ON LIMITED INVESTIGATIONS BY THE STATE AND IS IN NO WAY WARRANTED TO INDICATE THE CONDITIONS OF ACTUAL QUANTITIES OF WORK WHICH WILL BE REQUIRED.

Date Plotted: October 01, 2014

DESIGNER/DRAFTER: MDD/KR-M

CHECKED BY: MDD

SCALE AS NOTED

STATE OF CONNECTICUT
DEPARTMENT OF TRANSPORTATION

ENGINEER: BAKER ENGINEERING

APPROVED BY: DATE:

STATE OF CONNECTICUT — KENNETH R. KRAUSE — No. 19079 — LICENSED PROFESSIONAL ENGINEER

PROJECT TITLE: SHORE LINE EAST RAILROAD STATIONS

TOWN: CLINTON

DRAWING TITLE: TOWER SUPERSTRUCTURE SECTIONS & DETAILS - 4

PROJECT NO. 310-0059

DRAWING NO. S-504

SHEET NO. 06.31

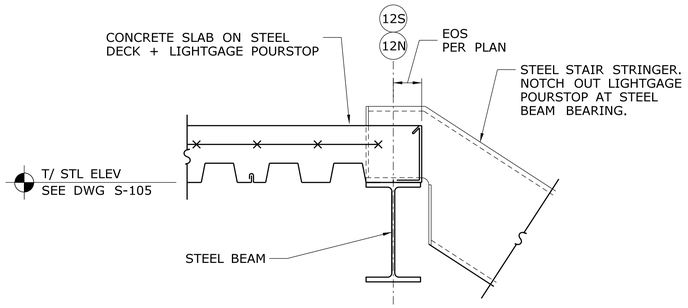

SECTION AT LANDING EDGE OF SLAB — 7 / S-505

SCALE: 1½"=1'-0"

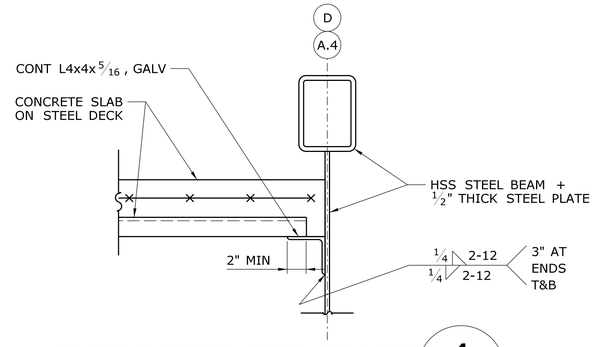

SECTION DETAIL DECK SUPPORT — 4 / S-505

SCALE: 1½"=1'-0"

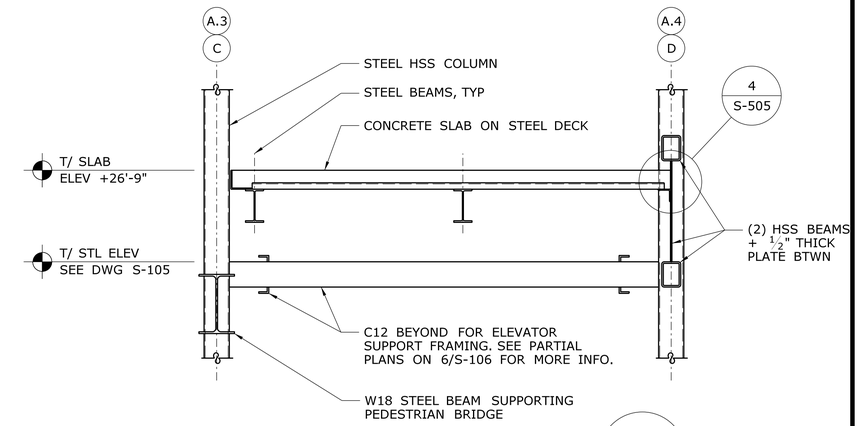

SECTION - LANDING AT BRIDGE — 2 / S-505

SCALE: 1/2"=1'-0"

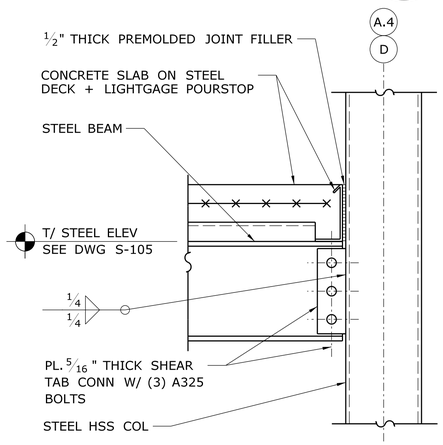

SECTION - COLUMN / BEAM CONNECTION AT LANDING — 6 / S-505

SCALE: 1½"=1'-0"

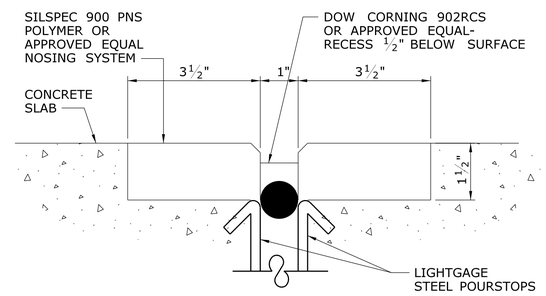

SECTION DETAIL - SLAB JOINT — 3A / S-505

SCALE: 1½"=1'-0"

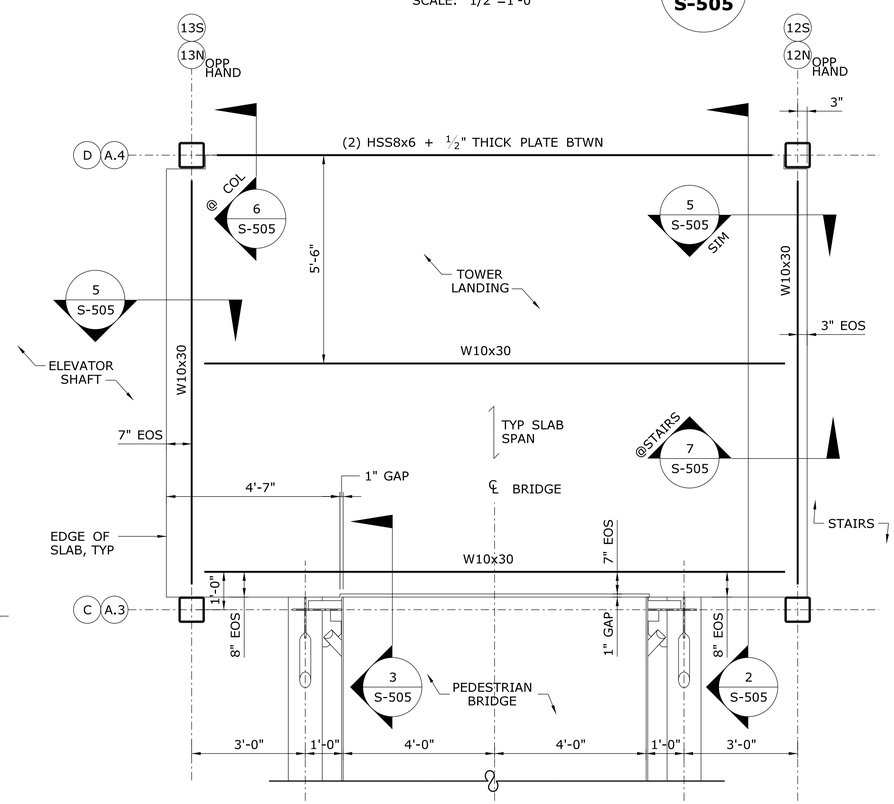

NOTE:
1. REFER TO S-105 AND S-106 FOR ALL TOP OF STEEL ELEVATIONS.
2. CONCRETE FLOOR SLAB: 2" - 20 GAGE GALV COMPOSITE METAL DECK WITH 4" NORM WT CONCRETE REINFORCING W/ 6x6 - W2.1xW2.1 WWF (6" TOTAL SLAB THICKNESS)

DETAILED PLAN VIEW AT TOWER LANDING AND PEDESTRIAN BRIDGE — 1 / S-505

SCALE: 1/2"=1'-0"

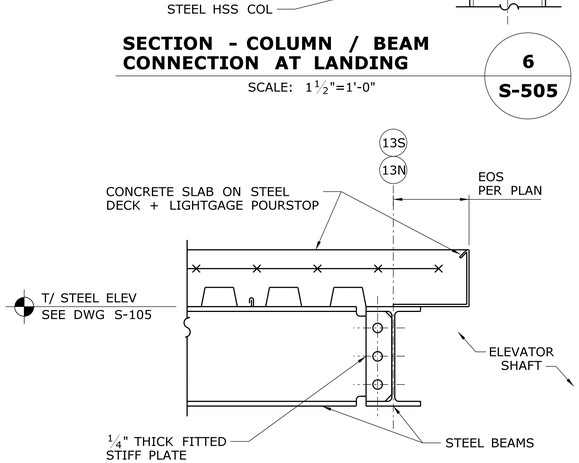

SECTION AT LANDING EDGE OF SLAB — 5 / S-505

SCALE: 1½"=1'-0"

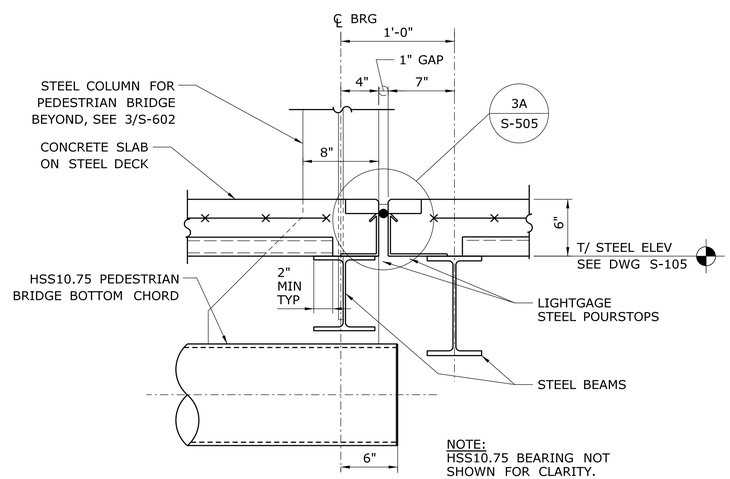

NOTE:
HSS10.75 BEARING NOT SHOWN FOR CLARITY.

PLATFORM AT BRIDGE SECTION — 3 / S-505

SCALE: 1½"=1'-0"

REV.	DATE	REVISION DESCRIPTION	SHEET NO.

Filename: FD_MSH_STR_0027_0059_S-505.dgn

THE INFORMATION, INCLUDING ESTIMATED QUANTITIES OF WORK, SHOWN ON THESE SHEETS IS BASED ON LIMITED INVESTIGATIONS BY THE STATE AND IS IN NO WAY WARRANTED TO INDICATE THE CONDITIONS OF ACTUAL QUANTITIES OF WORK WHICH WILL BE REQUIRED.

Date Plotted: October 01, 2014

DESIGNER/DRAFTER: MDD/KR-M
CHECKED BY: MDD
SCALE AS NOTED

STATE OF CONNECTICUT
DEPARTMENT OF TRANSPORTATION

ENGINEER: BAKER ENGINEERING
APPROVED BY:
DATE:

STATE OF CONNECTICUT — 36-19079 — PROFESSIONAL ENGINEER

PROJECT TITLE:
SHORE LINE EAST RAILROAD STATIONS

TOWN: **CLINTON**

DRAWING TITLE: **TOWER SUPERSTRUCTURE SECTIONS & DETAILS - 5**

PROJECT NO. **310-0059**
DRAWING NO. **S-505**
SHEET NO. **06.32**

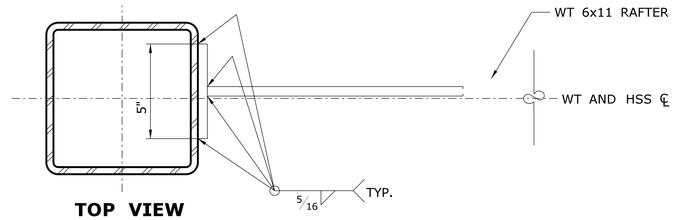

TOP VIEW

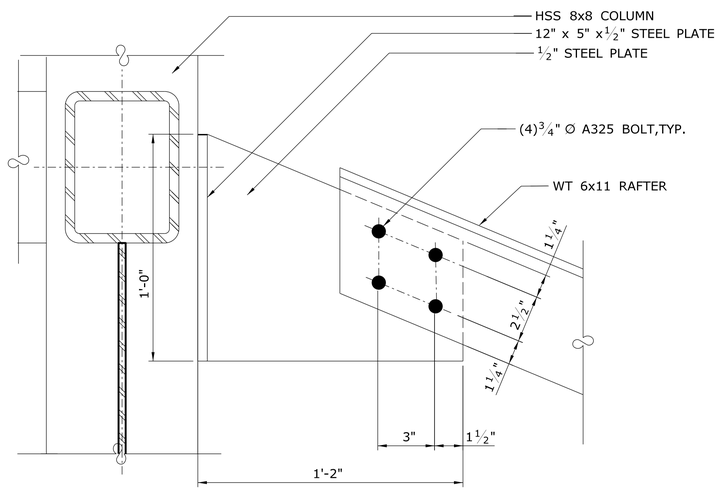

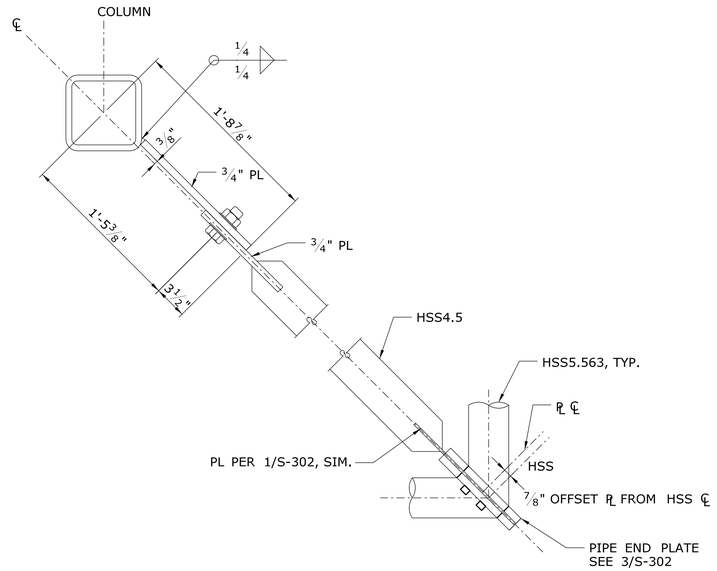

LOWER ATTACHMENT

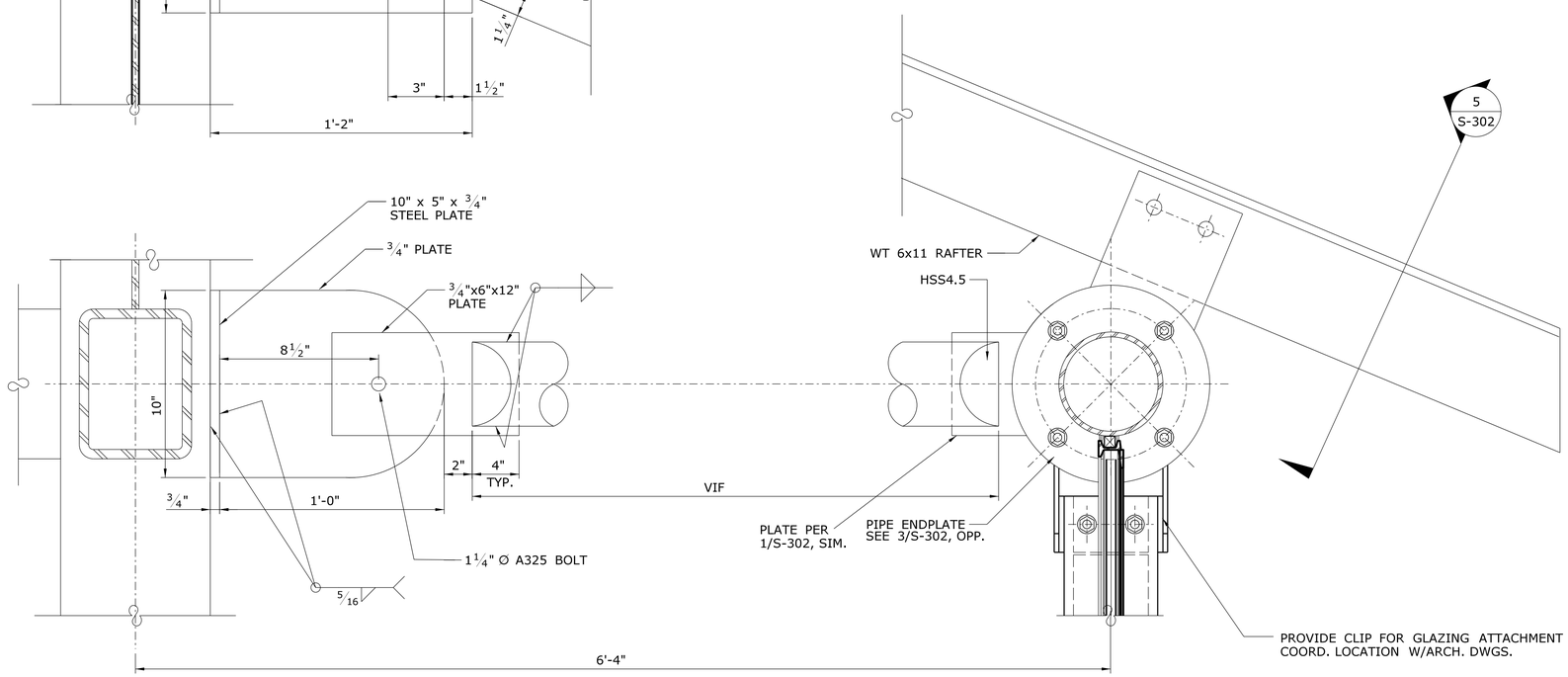

SECTION OF CANOPY ROOF OVER RAMP AT NORTH TOWER (1 / S-105) (1 / S-106)

SCALE: 3"=1'-0"

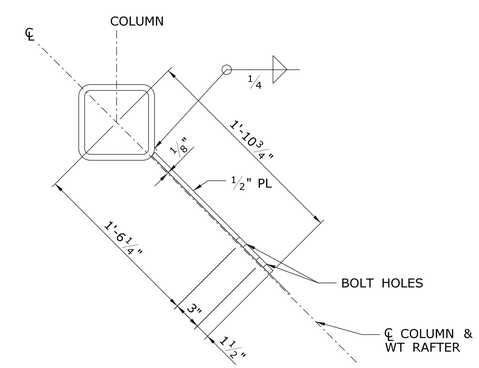

UPPER ATTACHMENT

HIP RAFTER ATTACHMENT DETAIL (2 / S-506)

SCALE: 1 1/2"=1'-0"

NOTES:

1. REFER TO GENERAL NOTES, KEYS, AND ABBREVIATIONS AND SPECIFICATIONS FOR MORE INFO.
2. ALL HSS3.5 OR HSS4.5 TO HAVE 1/8" CLOSURE PLATE SEAL WELDED TO PIPE END.
3. ALL WELDS SHALL BE 1/4" THICK FILLET WELDS UNLESS NOTED OTHERWISE.
4. ALL STRUCTURAL STEEL TO BE THERMAL SPRAYED METALIZED FINISH. ALL STEEL CONNECTION FASTERNERS TO BE GALVANIZED. REFER TO SPECIFICATIONS FOR MORE INFORMATION.

REV.	DATE	REVISION DESCRIPTION	SHEET NO.

Filename: FD_MSH_STR_0027_0048_S-506.dgn

THE INFORMATION, INCLUDING ESTIMATED QUANTITIES OF WORK, SHOWN ON THESE SHEETS IS BASED ON LIMITED INVESTIGATIONS BY THE STATE AND IS IN NO WAY WARRANTED TO INDICATE THE CONDITIONS OF ACTUAL QUANTITIES OF WORK WHICH WILL BE REQUIRED.

Date Plotted: October 01, 2014

DESIGNER/DRAFTER: MDD/KR-M
CHECKED BY: MDD
SCALE AS NOTED

STATE OF CONNECTICUT
DEPARTMENT OF TRANSPORTATION

ENGINEER: BAKER ENGINEERING
APPROVED BY:
DATE:

PROJECT TITLE: SHORE LINE EAST RAILROAD STATIONS

TOWN: CLINTON

DRAWING TITLE: TOWER STRUCTURE RAMP CANOPY SECTIONS

PROJECT NO. 310-0059
DRAWING NO. S-506
SHEET NO. 06.33

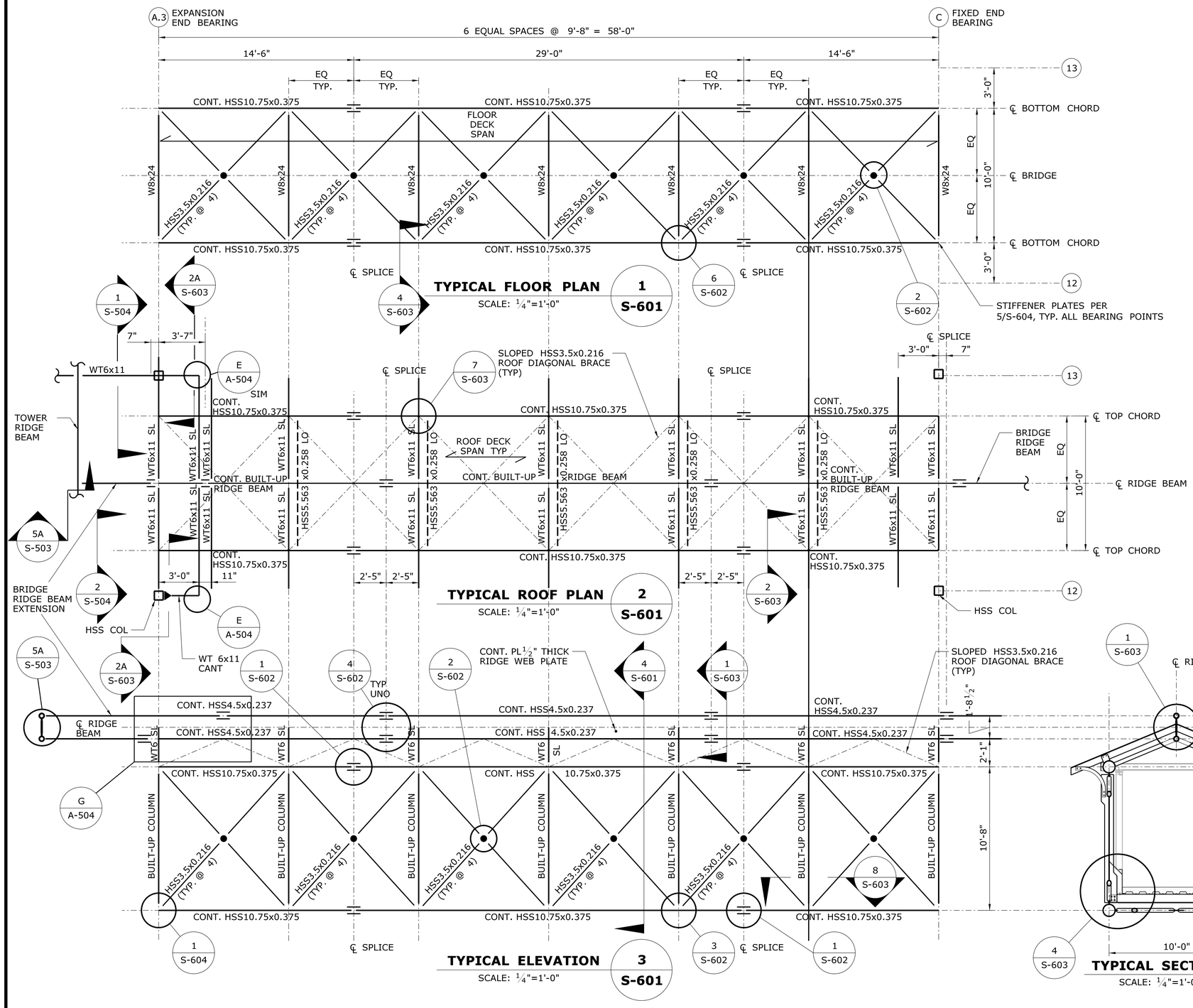

NOTES:

1. REFER TO GENERAL NOTES, KEYS, AND ABBREVIATIONS AND SPECIFICATIONS FOR MORE INFO.
2. FLOOR DECK CONSTRUCTION: 2" DEEP, 16 GAGE, GALV COMPOSITE METAL DECK WITH 4" NWC REINF W/6x6-W2.1xW2.1 WWF (6" TOTAL SLAB THICKNESS). STEEL DECK TO SPAN A MINIMUM OF 2 SPANS, TYP.
3. ROOF DECK CONSTRUCTION: 5/8" T&G PLYWOOD SUPPORTED BY 3x8 WOOD RAFTERS @ 32" OC, MAX. ALTER SPACING AS REQUIRED TO AVOID TOP CHORD SPLICE (1/S-602). SEE ARCH DWGS FOR MORE INFORMATION.
4. ALL STEEL AND DECK TO HAVE BE THERMAL SPRAYED METALIZED FINISH. ALL STEEL CONNECTION FASTENERS TO BE GALVANIED. REFER TO SPECIFICATIONS FOR MORE INFORMATION.
5. FIELD WELDING SHALL BE LIMITED TO THE GREATEST EXTENT POSSIBLE AND WILL REQUIRE TOUCH UP OF THE THERMAL METALIZING SPRAY AND PAINT SYSTEM.
6. ALL ELEVATIONS ARE REFERENCED FROM DATUM ELEVATION NOTED ON S-101 AND S-102.

REV.	DATE	REVISION DESCRIPTION	SHEET NO.

Filename: FD_MSH_STR_0154_0062_S-601_A2.dgn

THE INFORMATION, INCLUDING ESTIMATED QUANTITIES OF WORK, SHOWN ON THESE SHEETS IS BASED ON LIMITED INVESTIGATIONS BY THE STATE AND IS IN NO WAY WARRANTED TO INDICATE THE CONDITIONS OF ACTUAL QUANTITIES OF WORK WHICH WILL BE REQUIRED.

Date Plotted: October 01, 2014

DESIGNER/DRAFTER: KR-M
CHECKED BY: MDD
SCALE AS NOTED

STATE OF CONNECTICUT
DEPARTMENT OF TRANSPORTATION

ENGINEER: BAKER ENGINEERING
APPROVED BY:
DATE:

PROJECT TITLE:
SHORE LINE EAST RAILROAD STATIONS

TOWN: CLINTON

DRAWING TITLE: PEDESTRIAN BRIDGE PLANS, ELEVATION AND SECTION

PROJECT NO. 310-0059
DRAWING NO. S-601
SHEET NO. 06.34

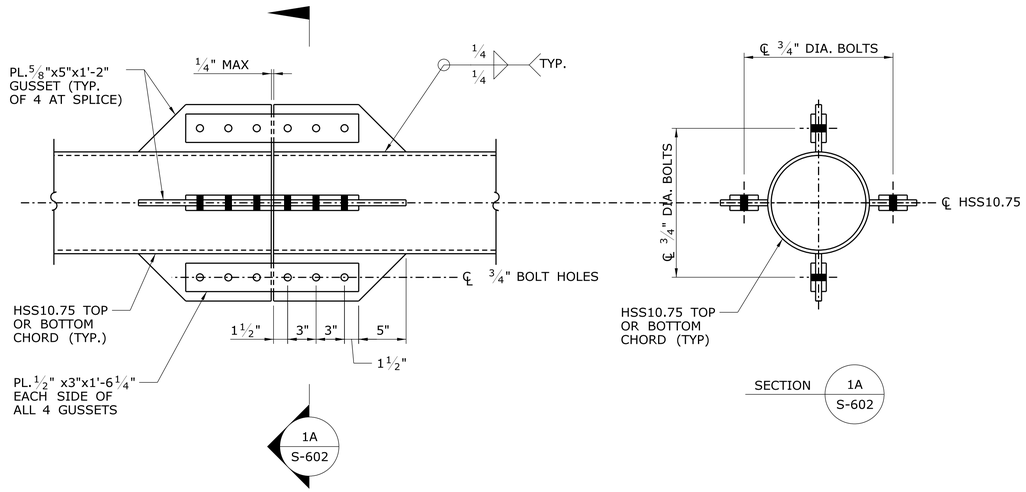

TYPICAL CHORD SPLICE DETAIL

SCALE: 1 1/2" =1'-0"

1 / S-601

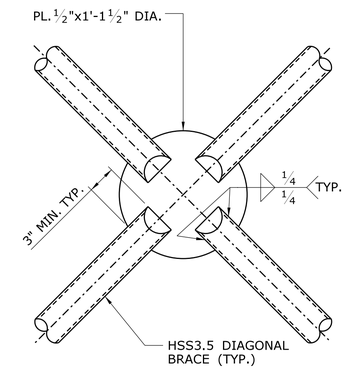

BOTTOM/VERTICAL LATERAL BRACING DETAIL

SCALE: 1 1/2" =1'-0"

2 / S-601

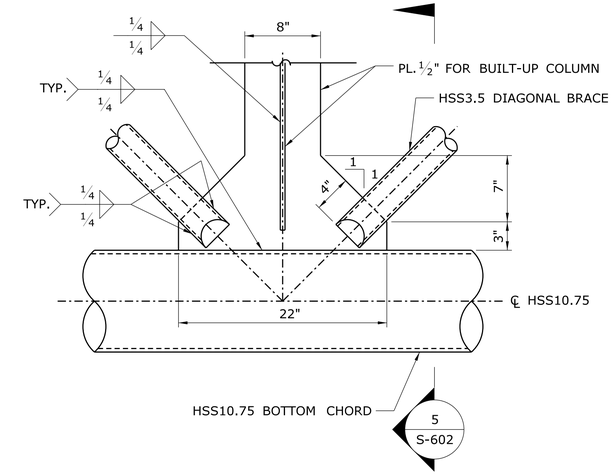

TYPICAL CONNECTION DETAIL

SCALE: 1 1/2" =1'-0"

3 / S-601

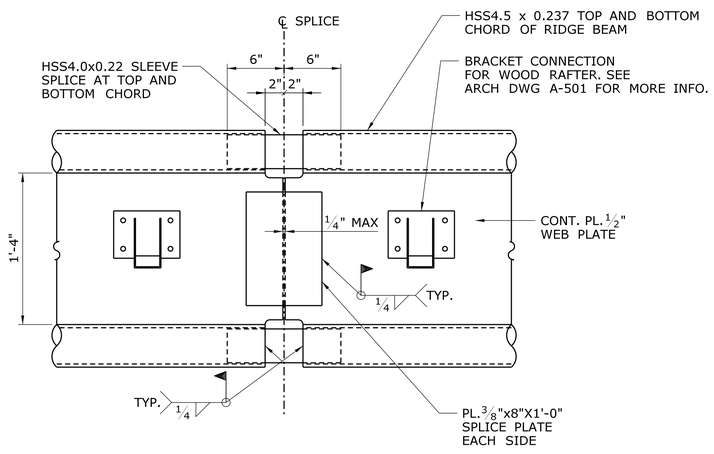

RIDGE BEAM - FIELD SPLICE

SCALE: 1 1/2" =1'-0"

4 / S-601

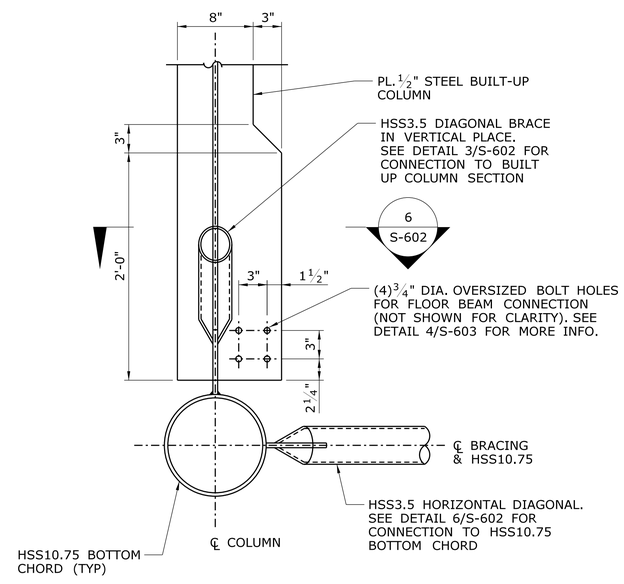

TYPICAL CONNECTION DETAIL

SCALE: 1 1/2" =1'-0"

5 / S-602

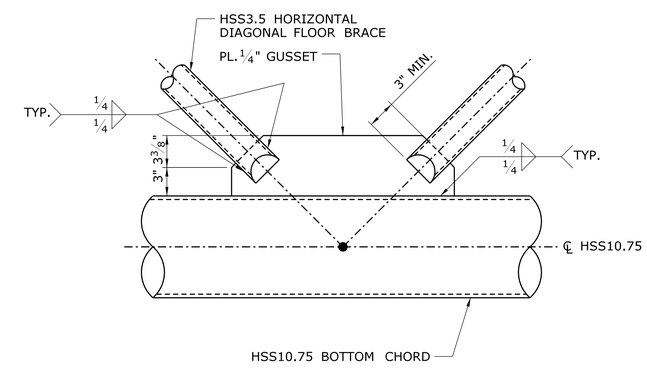

PLAN VIEW DETAIL - BOTTOM BRACING CONNECTION

SCALE: 1 1/2" =1'-0"

6 / S-601

NOTES:

1. SEE GENERAL NOTES, KEYS, AND ABBREVIATIONS AND SPECIFICATIONS FOR MORE INFO.
2. PROVIDE 1/8" THICK CLOSURE PLATE SEAL WELDED TO HSS3.5 AND HSS4.5 SECTIONS.
3. ALL WELDS SHALL BE 1/4" THICK FILLET WELD, UNLESS NOTED OTHERWISE.
4. FIELD WELDING SHALL BE LIMITED TO THE GREATEST EXTENT POSSIBLE AND WILL REQUIRE TOUCH UP OF THE THERMAL SPRAY METALLIZING SPRAY COATING AND PAINT SYSTEM.

REV.	DATE	REVISION DESCRIPTION	SHEET NO.

Filename: FD_MSH_STR_0027_0048_S-602.dgn

THE INFORMATION, INCLUDING ESTIMATED QUANTITIES OF WORK, SHOWN ON THESE SHEETS IS BASED ON LIMITED INVESTIGATIONS BY THE STATE AND IS IN NO WAY WARRANTED TO INDICATE THE CONDITIONS OF ACTUAL QUANTITIES OF WORK WHICH WILL BE REQUIRED.

Date Plotted: October 01, 2014

DESIGNER/DRAFTER: MDD/KR-M

CHECKED BY: MDD

SCALE AS NOTED

STATE OF CONNECTICUT
DEPARTMENT OF TRANSPORTATION

ENGINEER: BAKER ENGINEERING

APPROVED BY:

DATE:

STATE OF CONNECTICUT
DAVID A. DONOVAN
No. 19079
LICENSED
PROFESSIONAL ENGINEER

PROJECT TITLE:

SHORE LINE EAST RAILROAD STATIONS

TOWN: CLINTON

DRAWING TITLE: BRIDGE DETAILS - 1

PROJECT NO. 310-0059

DRAWING NO. S-602

SHEET NO. 06.35

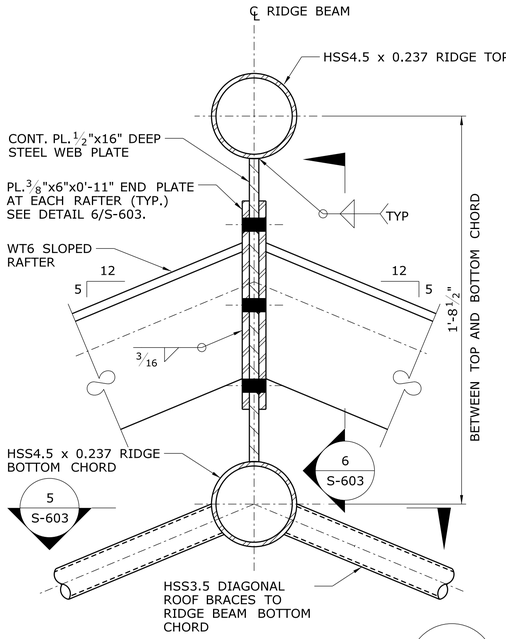

WT/RIDGE BEAM CONN. DETAIL — 1 / S-601

SCALE: 3" =1'-0"

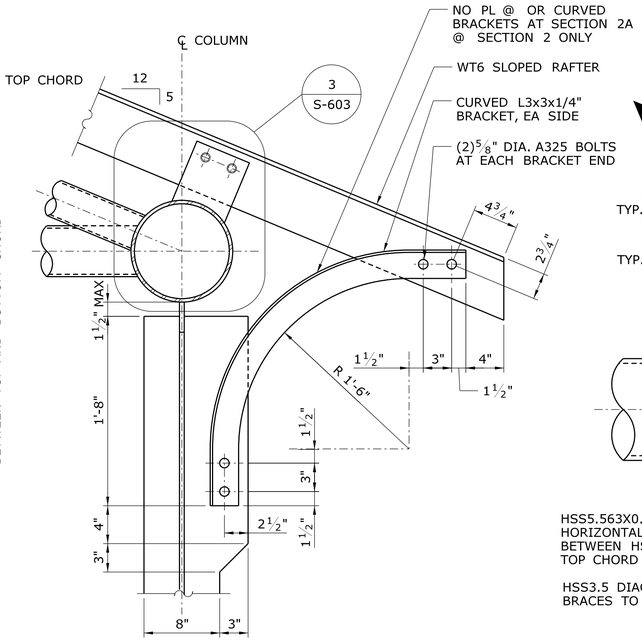

ROOF BRACKET DETAIL — 2 / S-601 — 2A / S-601

SCALE: 1 1/2" =1'-0"

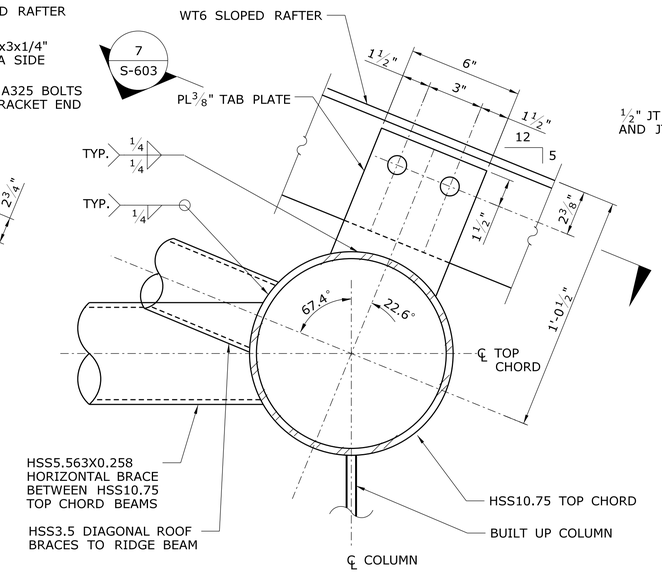

WT CONNECTION DETAIL — 3 / S-603

SCALE: 3" =1'-0"

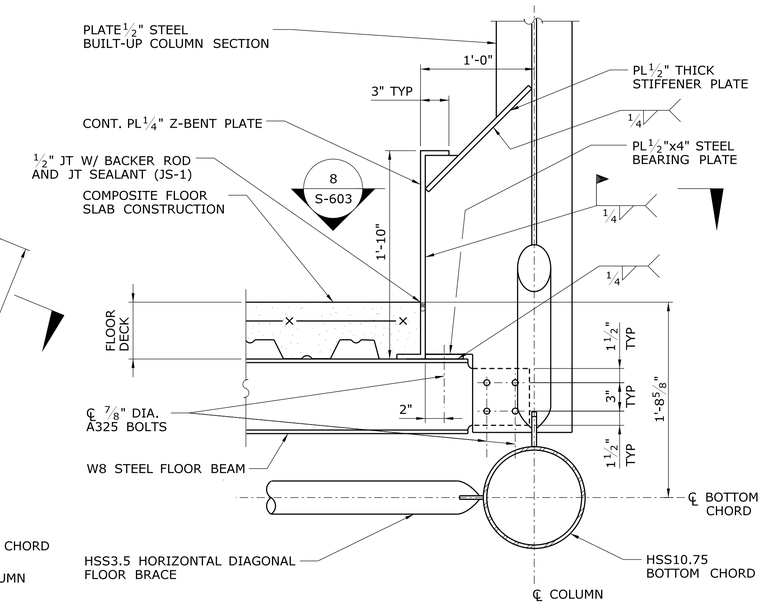

TYPICAL FLOORBEAM CONNECTION DETAIL — 4 / S-601

SCALE: 1 1/2" =1'-0"

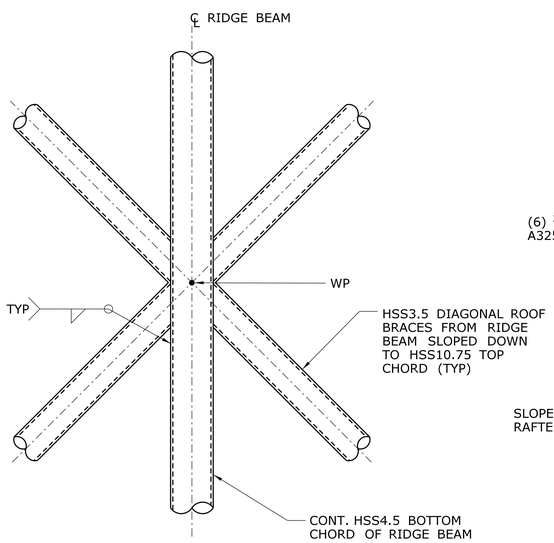

RIDGE BEAM LATERAL BRACING CONN. DETAIL — 5 / S-603

SCALE: 3" =1'-0"

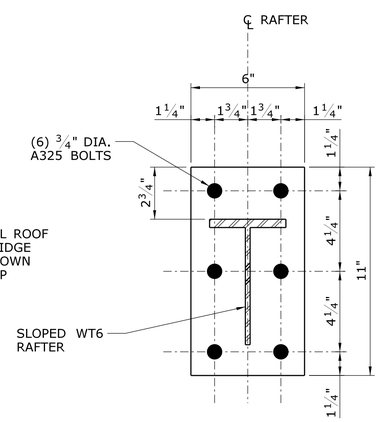

WT/RIDGE BEAM CONN. DETAIL — 6 / S-603

SCALE: 3" =1'-0"

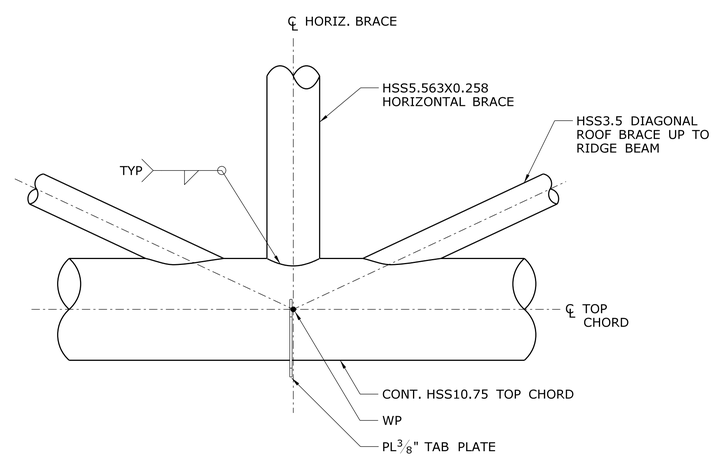

PLAN VIEW - LATERAL BRACING CONNECTION DETAIL — 7 / S-601

SCALE: 1 1/2" =1'-0"

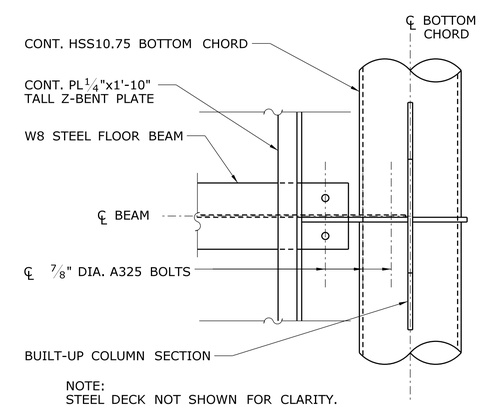

NOTE:
STEEL DECK NOT SHOWN FOR CLARITY.

PLAN VIEW - TYPICAL BEAM CONNECTION — 8 / S-603

SCALE: 1 1/2" =1'-0"

NOTES:

1. SEE GENERAL NOTES, KEYS, ABBREVIATIONS AND SPECIFICATIONS FOR MORE INFO.
2. PROVIDE 1/8" THICK CLOSURE PLATE SEAL WELDED TO HSS3.5 AND HSS4.5 SECTIONS.
3. ALL WELDS SHALL BE 1/4" THICK FILLET WELDS UNLESS NOTED OTHERWISE.

REV.	DATE	REVISION DESCRIPTION	SHEET NO.

Filename: FD..MSH..STR..0027.0048..S-603.dgn

THE INFORMATION, INCLUDING ESTIMATED QUANTITIES OF WORK, SHOWN ON THESE SHEETS IS BASED ON LIMITED INVESTIGATIONS BY THE STATE AND IS IN NO WAY WARRANTED TO INDICATE THE CONDITIONS OF ACTUAL QUANTITIES OF WORK WHICH WILL BE REQUIRED.

Date Plotted: October 01, 2014

DESIGNER/DRAFTER: MDD/KR-M
CHECKED BY: MDD
SCALE AS NOTED

STATE OF CONNECTICUT
DEPARTMENT OF TRANSPORTATION

ENGINEER: BAKER ENGINEERING
APPROVED BY:
DATE:

PROJECT TITLE: SHORE LINE EAST RAILROAD STATIONS

TOWN: CLINTON

DRAWING TITLE: BRIDGE DETAILS - 2

PROJECT NO. 310-0059
DRAWING NO. S-603
SHEET NO. 06.36

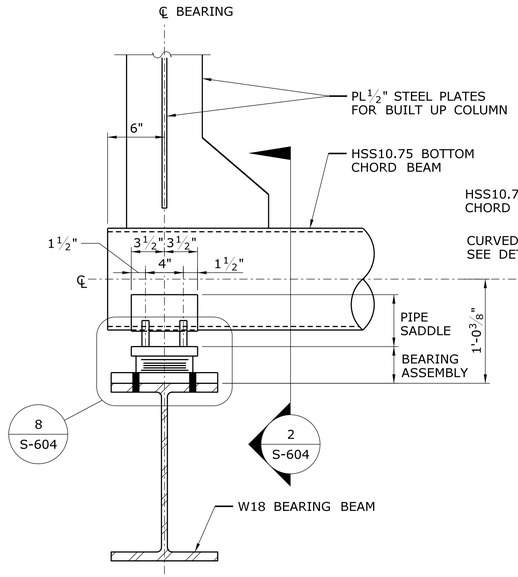

NOTE:
SIDE RETAINERS AND W8 FLOOR BEAM NOT SHOWN FOR CLARITY.

SIDE ELEVATION - END BEARING — 1 / S-601

SCALE: 1½"=1'-0"

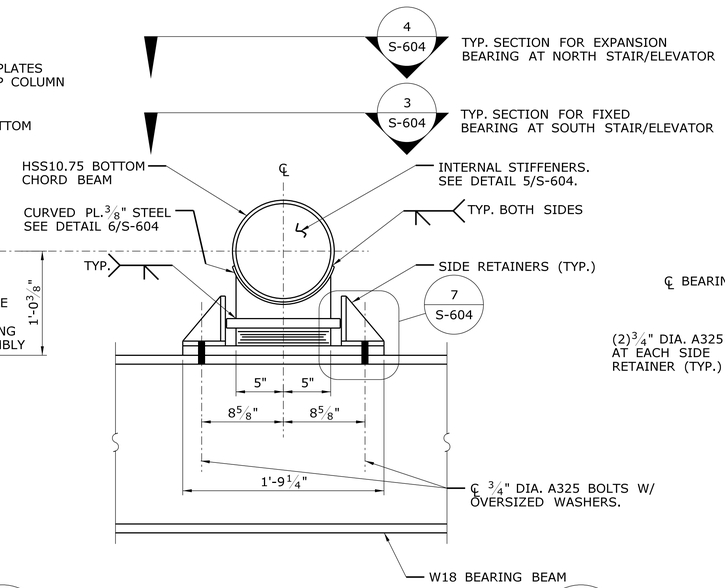

SECTION - END BEARING — 2 / S-604

SCALE: 1½"=1'-0"

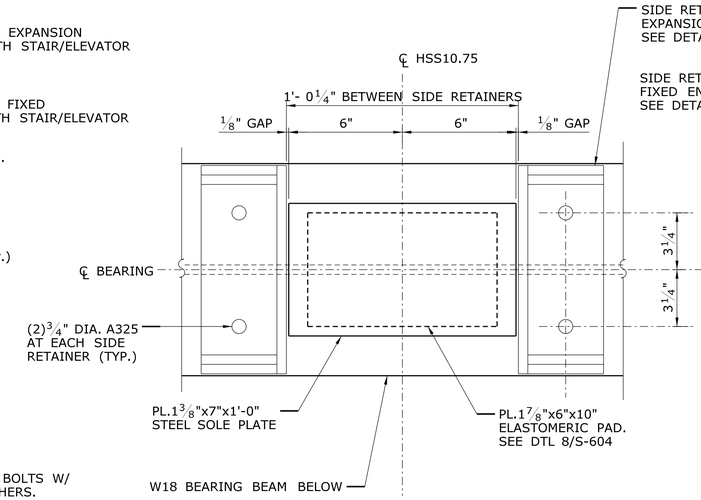

NOTE: HSS10.75 BOTTOM CHORD NOT SHOWN FOR CLARITY.

PLAN VIEW - EXPANSION END BEARING TYPE — 3 / S-604

SCALE: 3"=1'-0"

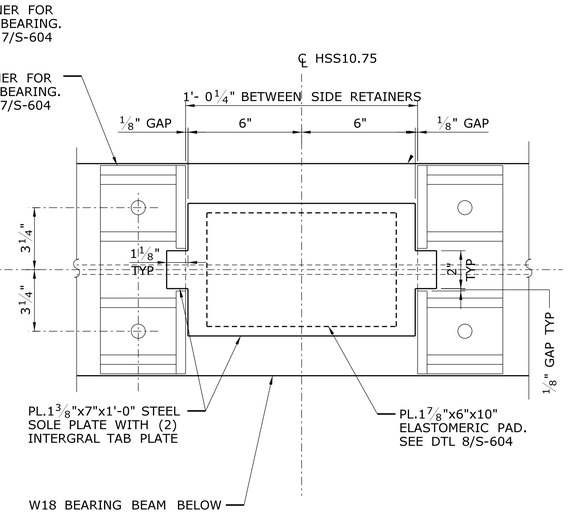

NOTE: HSS10.75 BOTTOM CHORD NOT SHOWN FOR CLARITY.

PLAN VIEW - FIXED END BEARING TYPE — 4 / S-604

SCALE: 3"=1'-0"

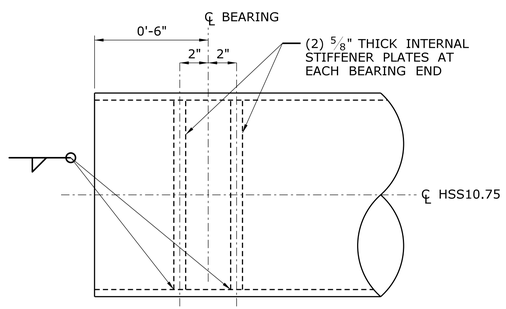

INTERNAL STIFFENER DETAIL — 5 / S-604

SCALE: 3"=1'-0"

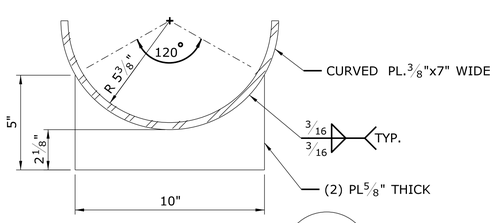

SIDE SADDLE DETAIL — 6 / S-604

SCALE: 3"=1'-0"

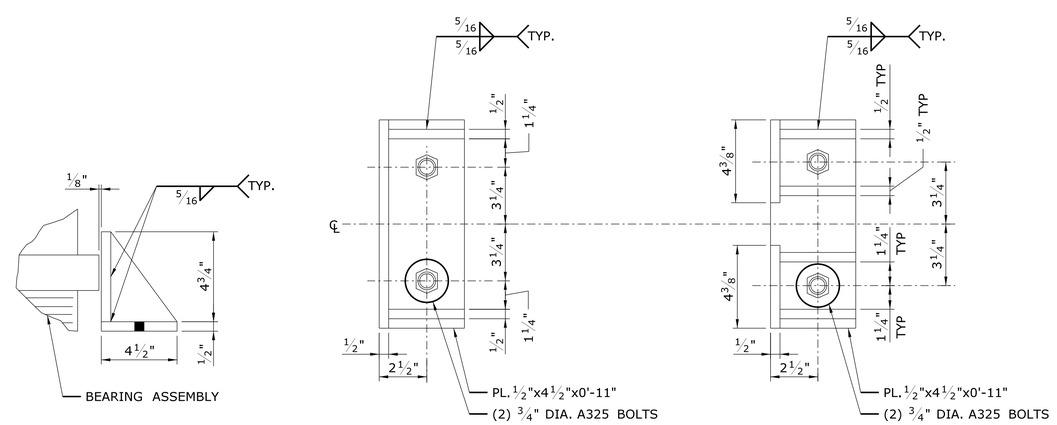

TYP. SECTION FOR BOTH BEARINGS

TYP. PLAN VIEW FOR EXPANSION BEARING
REFER TO DETAIL 3/S-604

TYP. PLAN VIEW FOR FIXED BEARING
REFER TO DETAIL 4/S-604

SIDE RETAINER DETAILS — 7 / S-604

SCALE: 3"=1'-0"

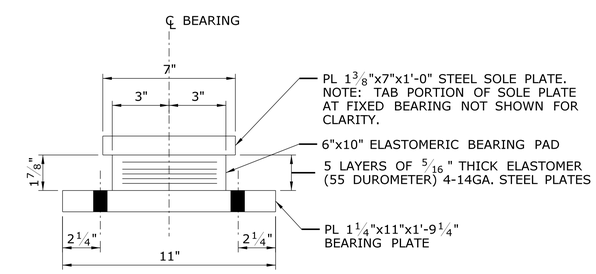

BEARING ASSEMBLY DETAIL — 8 / S-604

SCALE: 3"=1'-0"

NOTES:

1. REFER TO GENERAL NOTES, KEYS, AND ABBREVIATIONS AND SPECIFICATIONS FOR MORE INFO.
2. ALL WELDS SHALL BE ¼" THICK FILLET WELDS UNLESS NOTED OTHERWISE.
3. ELASTOMERIC BEARINGS SHALL BE SET SUCH THAT THEY WILL BE VERTICAL AT 50° F AFTER THE APPLICATION OF FULL DEAD LOAD.

REV.	DATE	REVISION DESCRIPTION	SHEET NO.

Filename: FD_MSH_STR_0027_0048_S-604.dgn

THE INFORMATION, INCLUDING ESTIMATED QUANTITIES OF WORK, SHOWN ON THESE SHEETS IS BASED ON LIMITED INVESTIGATIONS BY THE STATE AND IS IN NO WAY WARRANTED TO INDICATE THE CONDITIONS OF ACTUAL QUANTITIES OF WORK WHICH WILL BE REQUIRED.

Date Plotted: October 01, 2014

DESIGNER/DRAFTER: MDD/KR-M
CHECKED BY: MDD
SCALE AS NOTED

STATE OF CONNECTICUT
DEPARTMENT OF TRANSPORTATION

ENGINEER: BAKER ENGINEERING
APPROVED BY:
DATE:

PROJECT TITLE:
SHORE LINE EAST RAILROAD STATIONS

TOWN: CLINTON

DRAWING TITLE: BRIDGE DETAILS - 3

PROJECT NO. 310-0059
DRAWING NO. S-604
SHEET NO. 06.37

CONSTRUCTION SEQUENCE - OVERALL GENERAL NOTES:

1. THE SUGGESTED STEPS ILLUSTRATE A SEQUENCE OF CONSTRUCTION ATTEMPTING TO CONFORM TO RAILROAD REGULATIONS BY, TO MINIMIZE DISRUPTIONS TO THE RAIL SERVICE AND SITE CONSTRAINTS. THE SEQUENCE MAY BE ALTERED SO LONG AS THE OPERATION OF THE RAILROAD IS MAINTAINED IN CONFORMANCE WITH THE SPECIFICATIONS, AND SUBJECT TO APPROVAL BY THE DESIGN PROFESSIONALS, THE CONNECTICUT DEPARTMENT OF TRANSPORTATION (ConnDOT) AND AMTRAK.
2. EQUIPMENT SHOWN IS PRESENTED TO DEMONSTRATE REQUIRED CLEARANCES AND POSSIBLE LOCATIONS OF EQUIPMENT WITH RELATIONSHIP TO CONSTRUCTION ACTIVITIES. IN NO WAY SHOULD IT BE CONSTRUED TO BEING A FINAL AND ONLY WAY FOR CONSTRUCTION. DIFFERENT AND/OR SMALLER PIECES OF EQUIPMENT CAN BE UTILIZED AT THE CONTRACTOR'S DETERMINATION AS LONG AS AMTRAK AND CONNDOT REQUIREMENTS, ALONG WITH ALL APPLICABLE CODES AND REGULATIONS, ARE SATISFIED.
3. THE WORK AND STAGING INFORMATION LISTED IS NOT INTENDED TO COVER ALL DETAILS OF THE CONSTRUCTION. THE CONTRACTOR MUST PREPARE A DETAILED CONSTRUCTION SEQUENCE PLAN(S) AND SCHEDULE(S) FOR REVIEW AND WITH WRITTEN APPROVAL PRIOR TO BEGINNING ANY WORK.
4. GIVEN THE NATURE OF THIS CONSTRUCTION WITH WORK PARALLELING THE RAIL LINES, THE CONTRACTOR IS TO HAVE ON SITE AT ALL TIMES EQUIPMENT CAPABLE OF REMOVING FAILED MACHINES OR DEBRIS FROM THE RAILS IF A BREAKDOWN WERE TO OCCUR.
5. CONTRACTOR IS TO HAVE ALL EROSION AND SEDIMENTATION CONTROLS AND PROTECTIONS IN PLACE PRIOR TO BEGINNING ANY WORK.
6. FOR EXPECTED TRACK OUTAGES AND RESTRICTIONS, SEE "NOTICE TO CONTRACTOR - WORK ON RAILROAD PROPERTY" INCLUDED IN THE PROJECT SPECIFICATIONS.
7. ALL WORK THAT FALLS WITHIN 15 FEET OF THE RAIL CENTERLINE OF THE RAIL CENTERLINE WILL REQUIRE A TRACK CLOSURE.
8. REFER TO AMTRACK SPECIFICATION 001142A FOR CRANE/HOISTING OPERATIONS OVER THE RAILROAD RIGHT-OF-WAY.
9. CRANE SHOWN IS FOR PLANNING PURPOSES ONLY. CONTRACTOR SHALL SUBMIT CRANE PLACEMENT AND ERECTION PLANS TO THE ENGINEER AND AMTRACK RAILROAD FOR REVIEW. THE PLANS SHALL BEE PREPARED BY A PROFESSIONAL ENGINEER LICENSED IN CONNECTICUT AND SHALL DEPICT THE ENTIRE LIFTING AND SETTING PROCEDURE INCLUDING:
   a. CRANE LOCATION(S)
   b. RIGGING
   c. SEQUENCE
   d. CRANE CHARTS
   e. STAGING LOCATION OF BRIDGE AT PICK POINT
   f. TAGLINE HANDLING
10. A MULTIPLE TRACK NIGHT TIME POWER OUTAGE IS REQUIRED DURING LIFTING AND PLACING OPERATIONS. CONTRACTOR TO COORDINATE WITH AMTRACK THE AVAILABLE DAY AND TIME.
11. LOCATIONS OF EXISTING AND NEW OVERHEAD ELECTRIFIED AND COMMUNICATION WIRING IS BELIEVED TO BE ACCURATE AT THIS TIME. PRIOR TO THE PREPARATION OF CRANE PLACEMENT AND ERECTION PLANS, THE CONTRACTOR SHALL FIELD VERIFY ALL CONDITIONS SHOWN ON PLANS.
12. CRANE TO BE MOUNTED LEVEL ON EXTENDED OUTRIGGERS IN FULL CONTACT WITH GROUND SURFACE. COMPACTED CRUSHED STONE OR SAND MAY BE USED TO FILL ANY LOW AREAS FOR LEVELNESS.
13. ROAD PLATES UNDER CRANE OUTRIGGERS TO BE GRADE A36 STEEL OR BETTER.
14. CRANE POSITIONS MAY BE ADJUSTED TO SUIT FIELD CONDITIONS AS LONG AS MAXIMUM RADIUS VS. LOAD IS NOT EXCEEDED.
15. MAXIMUM WIND SPEED AT TIME OF CRANE OPERATION SHALL NOT EXCEED 10 MPH.
16. A TABLE OR CHART PREPARED BY THE CRANE MANUFACTURER TO DESCIBE THE MAXIMUM LIFT AT ALL CONDITIONS OF LOADING SHALL BE POSTED IN CRANE CAB IN CLEAR VIEW OF OPERATOR.
17. THE CONTRACTOR SHALL BE RESPONSIBLE FOR VERIFYING THE WEIGHT OF THE LIFT AND FOR INSURING THE STABILITY OF EACH MEMBER DURING ALL PHASES ERECTION.
18. ANCHOR BOLTS FOR TOWER STRUCTURE AND BRIDGE STRUCTURE TO BE INSTALLED AND FASTENED BEFORE THE CRANE SUPPORT CABLES ARE RELEASED.
19. ALL RIGGING SLINGS AND COMPONENTS TO HAVE A FACTOR OF SAFETY OF 5.
20. CRANE CAPACITY AT THE MAXIMUM OPERATING RADIUS SHALL BE 150% GREATER THAN THE LOAD.
21. ALL PERSONNEL SHALL BE AMTRACK SAFETY TRAINED PER THE CONTRACT SPECIFICATIONS.
22. AFTER THE PEDESTRIAN BRIDGE IS SET, THE CONTRACTOR SHALL COORDINATE THE INSTALLATIONS OF BRIDGE FINISHES (GLAZING, ROOFING, TOUCH-UP PAINTING) WITH AMTRACK TO OBTAIN THE NECESSARY TRACK OUTAGES.
23. TEMPORARY FALL PROTECTION SHOULD BE INSTALLED ON THE BRIDGE AS REQUIRED UNTIL THE FINAL BRIDGE FINISHES ARE COMPLETE.
24. COORDINATE THE NECESSARY GROUNDING OF CRANE EQUIPMENT WITH THE ENGINEER AND AMTRACK R.R.

CONSTRUCTION SEQUENCE - SUGGESTED DESIGN PROCEDURE:

STAGE 1 – CONSTRUCT PLATFORM WITH CANOPY AND TOWER MAT FOUNDATIONS

1. CONSTRUCT NEW PLATFORM FOUNDATION, ELEVATED PLATFORM STRUCTURE AND CANOPIES.
2. TWO PLATFORMS CAN BE CONSTRUCTED SIMULTANEOUSLY.
3. UTILIZE SMALLER EQUIPMENT TO ACCESS FROM THE REAR OF THE CONSTRUCTION ACTIVITY TO MINIMIZE DISRUPTION TO RAIL SERVICE.

STAGE 2 – STAIR AND ELEVATOR TOWER CONSTRUCTION

1. BOTH ELEVATOR/STAIR TOWER(S) CAN BE BUILT SIMULTANEOUSLY. ERECT STAIR LANDING TOWER END AND ELEVATOR TOWER END. TOWER STRUCTURE WILL COME ON SITE SHOP ASSEMBLED IN SECTIONS TO GREATEST EXTENT POSSIBLE. ERECTION OF TOWER SECTIONS WILL REQUIRE A TRACK CLOSURE WHICH REQUIRES THE CONTRACTOR TO COORDINATE WITH AMTRAK.
2. AFTER TOWER SECTIONS ARE SET, INSTALL INTERMEDIATE FRAMING AND STAIR STRINGERS. WHERE POSSIBLE USE SMALL CRANE OR LIFT TO REDUCE IMPACT ON RAIL SERVICE AND LANE CLOSURES. IF DESIRED, SET TOP MEMBERS FIRST AND UTILIZE RIGGING AND HOISTS OFF MEMBERS TO SET LOWER FRAME SECTIONS. PROTECT SECTIONS FROM DAMAGE.
3. CONTRACTOR TO VERIFY IN FIELD THE DISTANCES BETWEEN THE PEDESTRIAN BRIDGE BEARING PAD LOCATIONS PRIOR TO BEARING NEW BRIDGE ONTO TOWER STEEL FRAME STRUCTURES.

STAGE 3 – PEDESTRIAN BRIDGE OVERPASS CONSTRUCTION

1. ERECTION OF PEDESTRIAN BRIDGE WILL REQUIRE TRACK CLOSURE(S). CONTRACTOR TO COORDINATED WITH RAIL AUTHORITIES. CONTRACTOR NEEDS TO BE PREPARED TO RAISE, SET AND SECURE THE BRIDGE SECTION IN A LIMITED TIME FRAME.
2. THE BRIDGE HAS BEEN DESIGNED TO BE SHOP FABRICATED IN THREE (3) SECTIONS, THEN DELIVERED TO SITE AND FIELD SPLICED. SET FULL LENGTH OF BRIDGE ON GROUND (IN AREA SHOWN ON PLAN) TO PREPARE FOR HOISTING, RAISING AND SETTING IN PLACE.
3. BRIDGE SECTION IS TO BE RAISED WITH FLOOR SLAB METAL DECK INSTALLED, PREPPED AND READY FOR CONCRETE PLACEMENT AFTER ERECTION.
4. BRIDGE SECTION IS TO HAVE A TEMPORARY PLYWOOD COVERING INSTALLED ON THE OUTSIDE WALLS. PLYWOOD IS TO ENCLOSE THE BRIDGE AREA SO THAT WORK CAN PROCEED ON THE INTERIOR FINISHES AND WINDOW SYSTEM AFTER THE BRIDGE SECTION HAS BEEN SET AND SECURED, SO THAT ADDITIONAL RAIL CLOSURES CAN BE AVOIDED. CARE MUST BE TAKEN AS TO NOT DAMAGE THE BRIDGE MEMBERS OR FINISH WITH THE TEMPORARY PLYWOOD COVERING.
5. PEDESTRIAN BRIDGE ROOF FRAMING, STEEL ROOF DECK AND ELECTRICAL CONDUITS ARE TO BE DELIVERED TO SITE AND INSTALLED IN STAGING AREA PRIOR TO LIFTING IT IN PLACE.
6. ERECTION OF PEDESTRIAN BRIDGE TO BE PERFORMED WITH ALL TRACKS OUT OF SERVICE AND POWER OFF (TO BE COORDINATED WITH AMTRAK). MAINTAIN POWER TO EXISTING CATENARY FEEDERS (TO BE COORDINATED WITH AMTRACK).
7. CRANE TO BE SET UP AND PREPARED IN POSITION. HOOK ONTO BRIDGE STRUCTURE USING FOUR-LEG BRIDLE (POSITION 1). NOTE, LIFTING SEQUENCE TO BE PROGRAMED IN ADVANCE ON THE ON-BOARD COMPUTER. CONTRACTOR SHALL POSITION PERSONNEL ON TWO MAN LIFTS TO HANDLE TAGLINES ABOVE THE OVERHEAD WIRES AND ON THE GROUND TO CONTROL THE POSITION, SWING AND ROTATION OF THE BRIDGE THROUGHOUT THE ENTIRE LIFTING PROCEDURE.
8. RAISE THE PEDESTRIAN BRIDGE SO THAT THE UNDERSIDE OF THE BRIDGE STRUCTURE CLEARS THE TOP OF ANY EXISTING CABLES AND CABLE SUPPORTS BY A MINIMUM OF 15 FEET.
9. SWING THE CRANE BOOM, ADJUST BOOM LENGTH AND ANGLE SO THAT THE CENTERLINE OF THE PEDESTRIAN BRIDGE IS OVER CENTERLINE OF THE TRACKS WHILE MAINTAINING THE STRUCTURE PARALLEL TO THE CENTERLINE OF THE TRACKS BELOW (POSITION 2).
10. LOWER THE PEDESTRIAN BRIDGE SO THAT IT IS CLOSE TO THE FINAL ELEVATION AND IT CLEARS THE CLEARANCE ENVELOPE OF ANY EXISTING CABLES (POSITION 3).
11. ROTATE THE OVERPASS 90 DEGREES (POSITION 4).
12. SWING CRANE BOOM AND ADJUST BOOM LENGTH AND ANGLE SO THAT THE PEDESTRIAN BRIDGE IS POSITIONED OVER THE BEARINGS. LOWER THE STRUCTURE ONTO THE END BEARINGS AND SECURE USING ANCHOR BOLTS BEFORE RELEASING THE LOAD (POSITION 5).
13. SWING THE BOOM BACK CLEAR OF THE TRACKS AND LOWER THE BOOM.
14. ALL BEARING POINTS MUST BE MADE SECURE PRIOR TO RELEASE OF TRACK OUTAGE.

STAGE 4 – WRAP UP AND COMPLETE CONSTRUCTION

1. COMPLETE THE INSTALLATION AND RELATED ELECTRICAL WORK FOR THE ELEVATORS, SITE LIGHTING, PLATFORM LIGHTING, AND CANOPY LIGHTING.
2. COMPLETE THE GLAZING AND ALL RELATED FINISH WORK FOR THE PEDESTRIAN BRIDGE AND ELEVATOR SYSTEMS.
3. COMPLETE THE PUNCH LIST WORK.
4. REMOVE THE TEMPORARY CONSTRUCTION FACILITIES. CLEAN UP THE SITE AND PREPARE FOR OWNER ACCEPTANCE AND PUBLIC USE OF THE NEW TRAIN FACILITY.
5. IF REQUIRED, DURING WEEKEND, RE-PAVE LOT AND COMPLETE PARKING LOT IMPROVEMENTS.
6. COMPLETE THE WORK REQUIRED FOR THE SITE SIGNING AND THE LANDSCAPING.

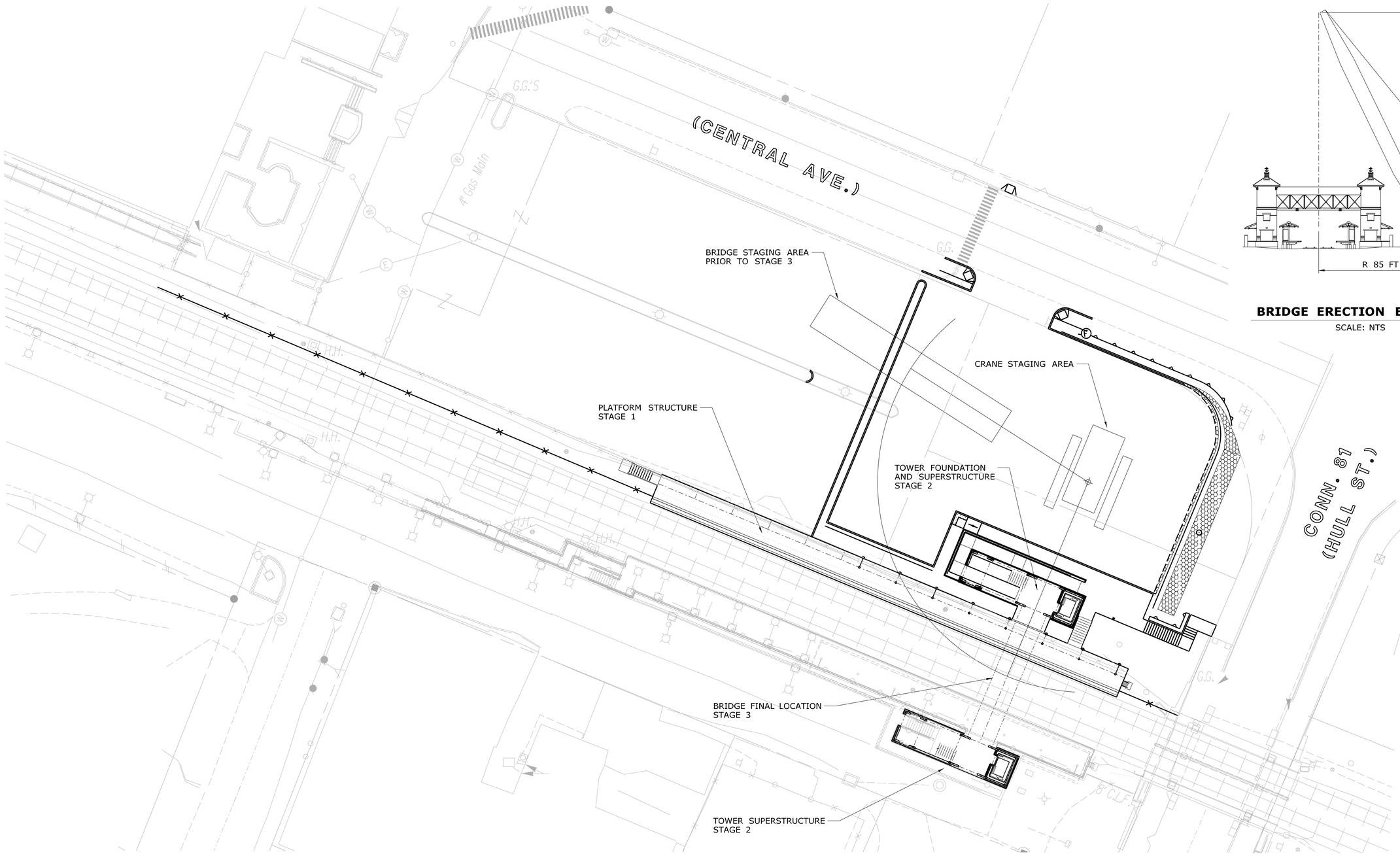

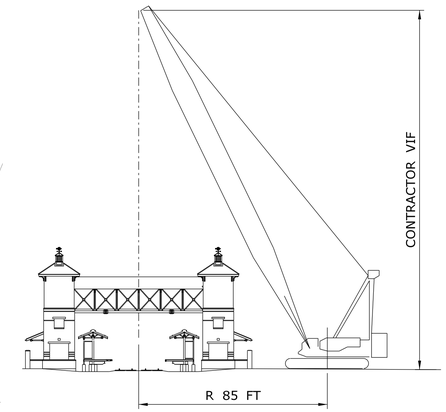

BRIDGE ERECTION ELEVATION

SCALE: NTS

N

OVERALL PLAN

SCALE: 20'=1"

NOTES:

FOR ALL CONSTRUCTION SEQUENCE NOTES REFER TO DWG S-701.

REV.	DATE	REVISION DESCRIPTION	SHEET NO.
-	-	-	-

Filename: FSLMSH_STR_0027_0048_S-702.dgn

THE INFORMATION, INCLUDING ESTIMATED QUANTITIES OF WORK, SHOWN ON THESE SHEETS IS BASED ON LIMITED INVESTIGATIONS BY THE STATE AND IS IN NO WAY WARRANTED TO INDICATE THE CONDITIONS OF ACTUAL QUANTITIES OF WORK WHICH WILL BE REQUIRED.

Date Plotted: October 01, 2014

DESIGNER/DRAFTER: KR-M

CHECKED BY: MDD

SCALE IN FEET

0 20 40

SCALE 1"=20'

STATE OF CONNECTICUT
DEPARTMENT OF TRANSPORTATION

ENGINEER: BAKER ENGINEERING

APPROVED BY:

DATE:

STATE OF CONNECTICUT
DEPARTMENT OF TRANSPORTATION
LICENSED
PROFESSIONAL ENGINEER
24-19079

PROJECT TITLE:

SHORE LINE EAST RAILROAD STATIONS

TOWN: **CLINTON**

DRAWING TITLE: **CONSTRUCTION SEQUENCE - 2**

PROJECT NO. **310-0059**

DRAWING NO. **S-702**

SHEET NO. **06.39**

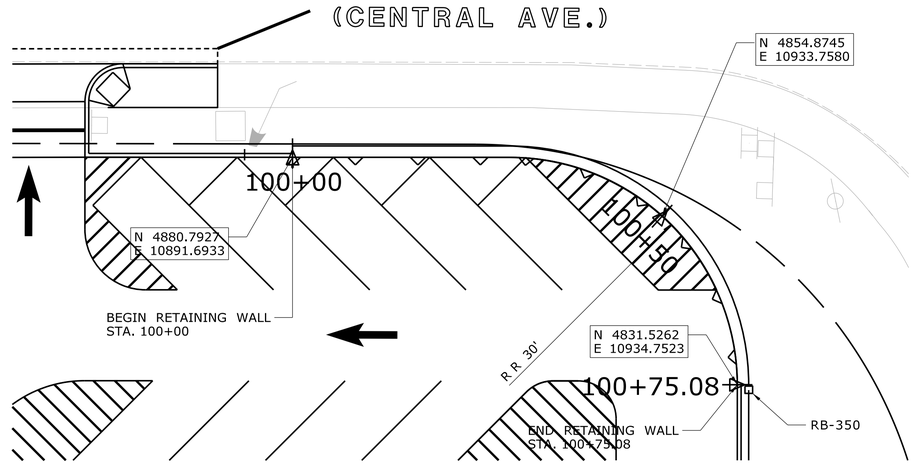

SITE PLAN

SCALE: 1" = 10'-0"

SCALE 1" = 10'

20 10 0 10 20

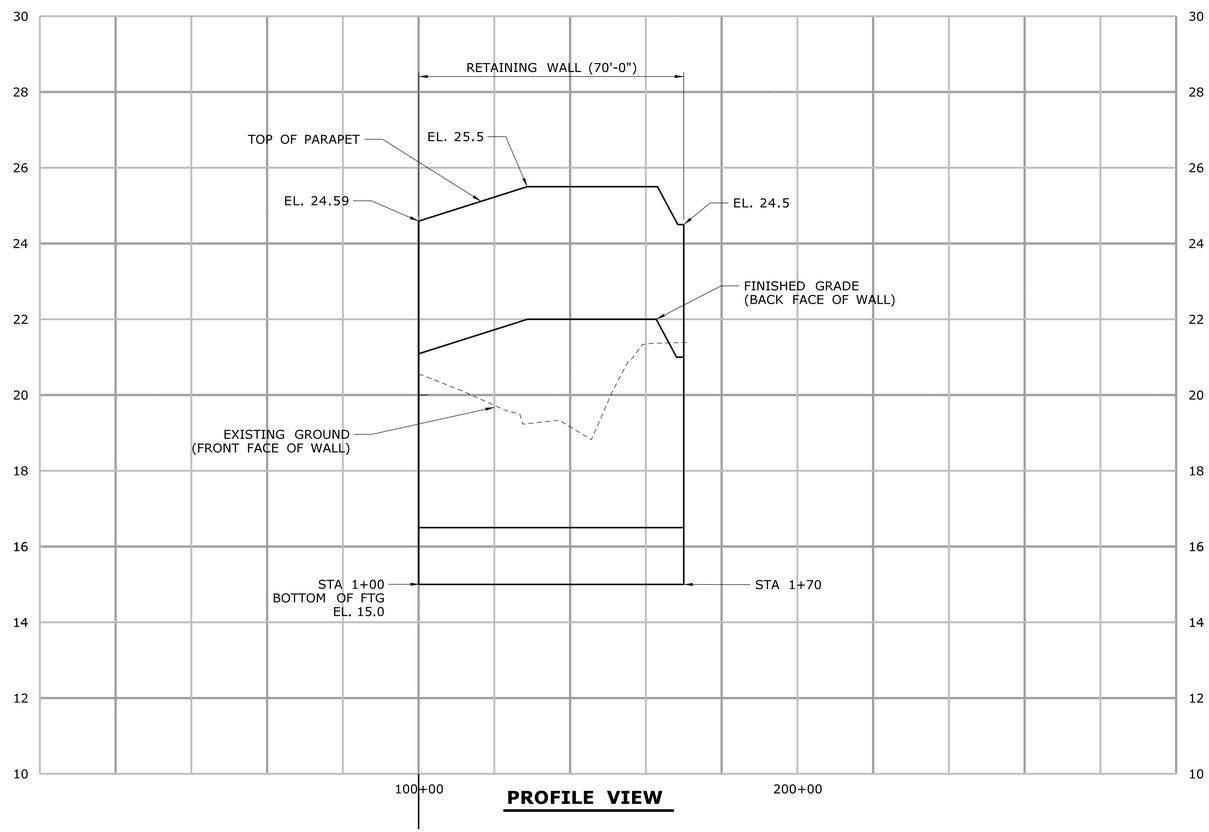

PROFILE VIEW

VERTICAL SCALE 1" = 2'
HORIZONTAL SCALE 1" = 20'

40 20 0 20 40

REV.	DATE	REVISION DESCRIPTION	SHEET NO.

Filename: FD_MSH_PRO_0014_0056_C-303.dgn

THE INFORMATION, INCLUDING ESTIMATED QUANTITIES OF WORK, SHOWN ON THESE SHEETS IS BASED ON LIMITED INVESTIGATIONS BY THE STATE AND IS IN NO WAY WARRANTED TO INDICATE THE CONDITIONS OF ACTUAL QUANTITIES OF WORK WHICH WILL BE REQUIRED.

Date Plotted: October 01, 2014

DESIGNER/DRAFTER: LSD

CHECKED BY: KAT

SCALE AS NOTED

STATE OF CONNECTICUT
DEPARTMENT OF TRANSPORTATION

ENGINEER: BAKER ENGINEERING

APPROVED BY:

DATE:

PROJECT TITLE:

SHORE LINE EAST RAILROAD STATIONS

TOWN: **CLINTON**

DRAWING TITLE: **RETAINING WALL PROFILE**

PROJECT NO. **310-0059**

DRAWING NO. **S-800**

SHEET NO. **06.40**

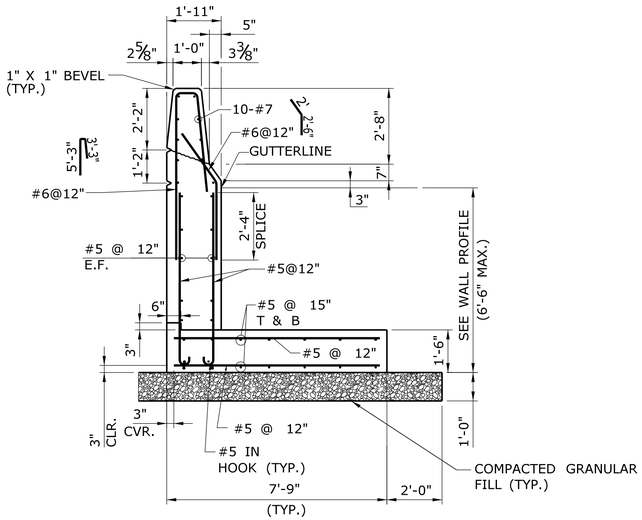

TYPICAL SECTION - REINFORCING

SCALE: 3/8" = 1'-0"

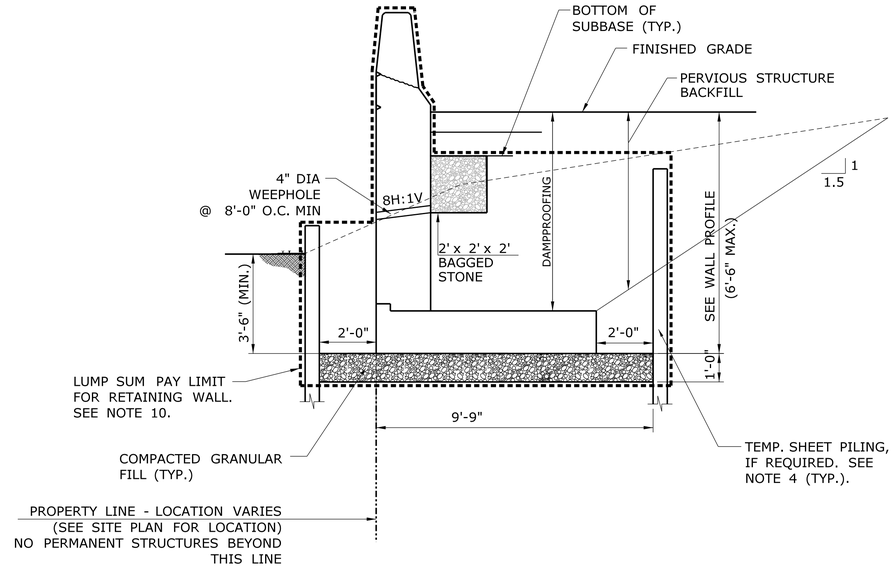

TYPICAL SECTION - CAST-IN-PLACE REINFORCED CONCRETE WALL

SCALE: 3/8" = 1'-0"

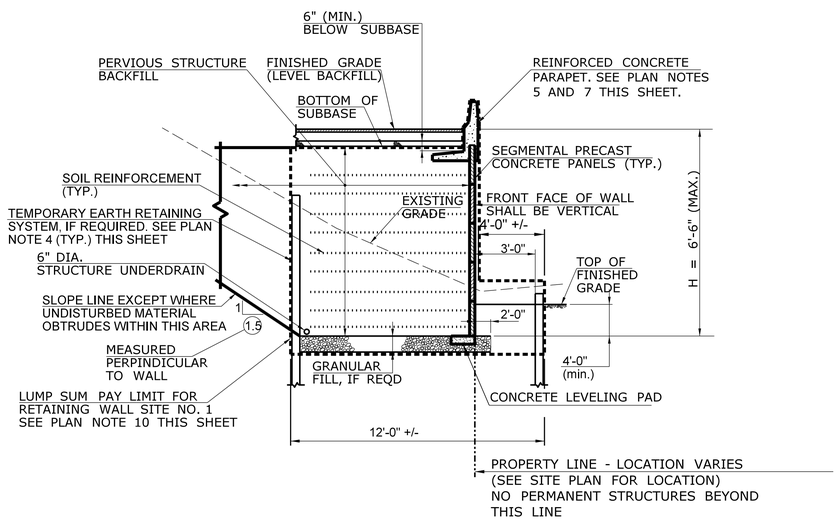

TYPICAL SECTION - MECHANICALLY STABILIZED EARTH WALL

SCALE: N.T.S.

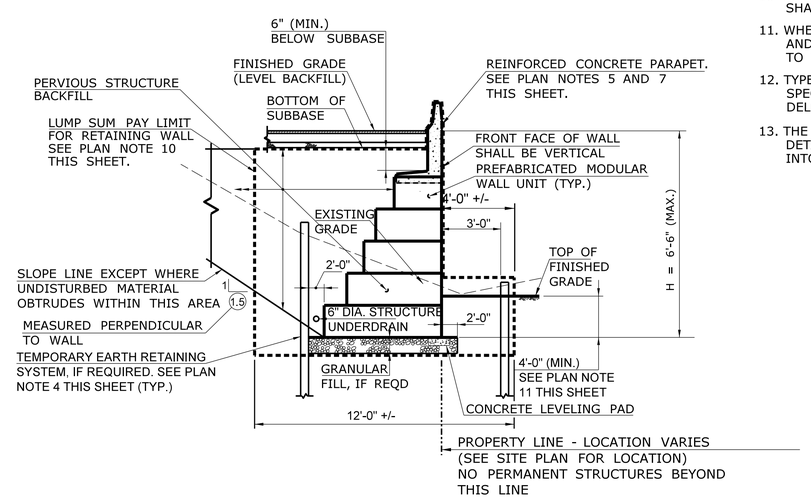

TYPICAL SECTION - PREFABRICATED MODULAR WALL

SCALE: N.T.S.

1. THE CONTRACTOR SHALL SELECT, DESIGN (FOR PROPRIETARY WALLS ONLY) AND CONSTRUCT ONE OF THE FOLLOWING WALL OPTIONS IN ACCORDANCE WITH THE SPECIAL PROVISION "RETAINING WALL (SITE NO. 1)".

PREFABRICATED WALLS:

1. DOUBLEWAL-STANDARD MOBILE
   DOUBLEWALL CORPORATION
   7 WEST STREET
   PLAINVILLE, CT 06062
   (860) 793-0295

2. T-WALL RETAINING WALL SYSTEM
   THE NEEL COMPANY
   8328-D TRAFORD LANE
   SPRINGFIELD, VA 22152
   (703) 913-7858

MECHANICALLY STABILIZED EARTH (MSE) WALLS:

1. REINFORCED EARTH WALLS
   THE REINFORCED EARTH COMPANY
   133 PARK STREET
   NORTH READING, MA 01864
   (978) 664-2830

2. ISOGRID RETAINING WALL SYSTEM
   THE NEEL COMPANY
   8328-D TRAFORD LANE
   SPRINGFIELD, VA 22152
   (703) 913-7858

3. RETAINED EARTH
   THE REINFORCED EARTH COMPANY
   1372 OLDBRIDGE ROAD, SUITE 101
   WOODBRIDGE, VA 22192
   (703) 499-9818

2. THE 2012 GEOTECHNICAL STRUCTURE SOILS REPORT BY GEODESIGN, INC. IS CONTAINED WITHIN THE PROJECT DOCUMENTS FOR INFORMATION. THIS REPORT INDICATES AN ALLOWABLE BEARING PRESSURE OF 1.0 TSF FOR RETAINING WALL STRUCTURES

3. 1½" OF

4. TEMPORARY EARTH RETAINING SYSTEM BELOW PAY LIMITS AND ANY TIEBACKS AND BRACING ASSOCIATED WITH THE EARTH RETAINING SYSTEM SHALL BE INCLUDED IN THE LUMP SUM COST OF THE WALL.

5. DETAILS SHOWN ON THIS SHEET ARE NOT SPECIFIC. THE CONTRACTOR'S DESIGNER SHALL MODIFY EACH SECTION FOR EACH SPECIFIC SITE.

6. LIGHT STANDARD ANCHORAGES, JUNCTION BOXES, AND RIGID METAL CONDUIT SHALL BE INCLUDED IN THE LUMP SUM PAY ITEM "RETAINING WALL".

7. THE DETAILING AND REINFORCEMENT OF THE PARAPET SECTION ABOVE THE GUTTER LINE SHALL BE AS SHOWN FOR THE CAST-IN-PLACE REINFORCED CONCRETE WALL SECTION OR AS DETAILED ELSEWHERE ON THE PLANS.

8. REINFORCING TO HAVE 2" COVER EXCEPT WHERE SHOWN OTHERWISE.

9. ALL DIMENSIONS ARE SPECIFIED WITH THE APPLICABLE UNITS OF MEASUREMENT.

10. ANY ADDITIONAL PERVIOUS STRUCUTRE BACKFILL REQUIRED OUTSIDE THIS LIMIT SHALL ALSO BE INCLUDED IN THE LUMP SUM PRICE.

11. WHERE A REINFORCED CONCRETE FOOTING IS PROVIDED UNDER THE FRONT AND BACK OF THE MODULE, THE EMBEDMENT DEPTH SHALL BE MEASURED TO THE BOTTOM OF THE FOOTINGS.

12. TYPE DE-5 DELINEATORS TO BE INSTALLED ON RETAINING WALL AS SPECIFIED ON THE TRAFFIC TYPICAL SHEET 7 - TYPICAL DELINEATION, DELINEATOR, AND OBJECT MARKER DETAILS.

13. THE CONTRACTOR SHALL SUBMIT WORKING DRAWINGS COMPLETELY DETAILING THE PLACEMENT OF REQUIRED ELECTRICAL APPURTENANCES INTO THE MANUFACTURED WALL.

REV.	DATE	REVISION DESCRIPTION	SHEET NO.

Filename: FDigMSH_STR_0027_0059_S-801.dgn

THE INFORMATION, INCLUDING ESTIMATED QUANTITIES OF WORK, SHOWN ON THESE SHEETS IS BASED ON LIMITED INVESTIGATIONS BY THE STATE AND IS IN NO WAY WARRANTED TO INDICATE THE CONDITIONS OF ACTUAL QUANTITIES OF WORK WHICH WILL BE REQUIRED.

Date Plotted: October 01, 2014

DESIGNER/DRAFTER: LSD
CHECKED BY: KAT
SCALE AS NOTED

STATE OF CONNECTICUT
DEPARTMENT OF TRANSPORTATION

ENGINEER: BAKER ENGINEERING
APPROVED BY:
DATE:

PROJECT TITLE: SHORE LINE EAST RAILROAD STATIONS

TOWN: CLINTON

DRAWING TITLE: RETAINING WALL DETAILS

PROJECT NO. 310-0059
DRAWING NO. S-801
SHEET NO. 06.41

07 - ELECTRICAL

INDEX OF DRAWINGS

DRAWING NUMBER	DRAWING TITLE
ELI-001	DRAWING INDEX
ED-101	SOUTH PLATFORM DEMOLITION PLAN
ES-101	ELECTRICAL SITE PLAN
EL-101	PLATFORM LIGHTING PLAN
EL-102	BRIDGE LIGHTING PLAN
EP-101	PLATFORM POWER PLAN
EP-102	BRIDGE POWER PLAN
E-701	RISER DIAGRAM SOUTH PLATFORM
E-702	RISER DIAGRAM NORTH PLATFORM
E-703	RISER DIAGRAM FIRE ALARM
E-704	RISER DIAGRAM P.A.
E-705	LIGHTING CONTROL SCHEMATIC
E-801	ELECTRICAL SCHEDULES
E-802	ELECTRICAL SCHEDULES
E-901	ELECTRICAL DETAILS
E-902	ELECTRICAL DETAILS
E-903	ELECTRICAL DETAILS

DESIGNED BY:

Baker

MICHAEL BAKER ENGINEERING, INC.
500 ENTERPRISE DRIVE
SUITE 2B
ROCKY HILL, CT 06067

REV.	DATE	REVISION DESCRIPTION	SHEET NO.
-	-	-	-
-	-	-	-
-	-	-	-
-	-	-	-
-	-	-	-
-	-	-	-

THE INFORMATION, INCLUDING ESTIMATED QUANTITIES OF WORK, SHOWN ON THESE SHEETS IS BASED ON LIMITED INVESTIGATIONS BY THE STATE AND IS IN NO WAY WARRANTED TO INDICATE THE CONDITIONS OF ACTUAL QUANTITIES OF WORK WHICH WILL BE REQUIRED.

Plotted Date: $DATE$

DESIGNER/DRAFTER: ALD

CHECKED BY: S.S.

STATE OF CONNECTICUT
DEPARTMENT OF TRANSPORTATION

Filename: $FILEA$

SIGNATURE/ BLOCK:

STATE OF CONNECTICUT
JOHN DELEGNAN
No. 19079
LICENSED
PROFESSIONAL ENGINEER

PROJECT TITLE:

SHORELINE EAST
RAILROAD STATIONS

TOWN: CLINTON

DRAWING TITLE: RAILROAD STATIONS

PROJECT NO. 310-0059

DRAWING NO. ELI-001

SHEET NO. 07.01

Border Version: 11/14/08

Connecticut Department of Transportation
QA/QC Format Check

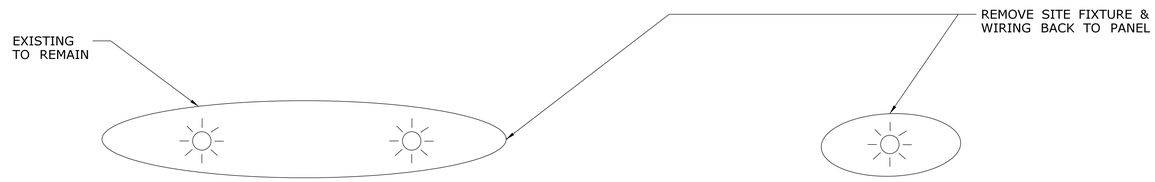

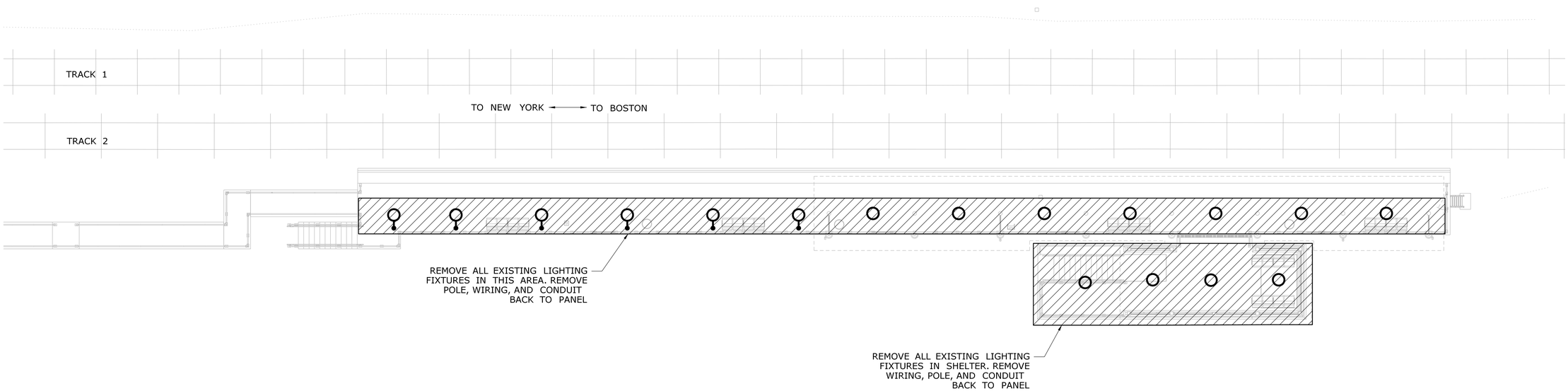

N

SOUTH PLATFORM DEMOLITION PLAN

SCALE: 1"=10'-0"

REV.	DATE	REVISION DESCRIPTION	SHEET NO.

Filename: FD_MSH_ELE_0027_0059_ED-101.dgn

THE INFORMATION, INCLUDING ESTIMATED QUANTITIES OF WORK, SHOWN ON THESE SHEETS IS BASED ON LIMITED INVESTIGATIONS BY THE STATE AND IS IN NO WAY WARRANTED TO INDICATE THE CONDITIONS OF ACTUAL QUANTITIES OF WORK WHICH WILL BE REQUIRED.

Date Plotted: October 01, 2014

DESIGNER/DRAFTER: RBMC

CHECKED BY: -

SCALE AS NOTED

STATE OF CONNECTICUT
DEPARTMENT OF TRANSPORTATIO

ENGINEER: BAKER ENGINEERING

APPROVED BY:

DATE:

STATE OF CONNECTICUT
NORTH DELEGACHIA
NO. 19079
LICENSED
PROFESSIONAL ENGINEER

PROJECT TITLE:

SHORE LINE EAST RAILROAD STATIONS

TOWN: **CLINTON**

DRAWING TITLE: **SOUTH PLATFORM DEMOLITION PLAN**

PROJECT NO. **310-0059**

DRAWING NO. **ED-101**

SHEET NO. **07.02**

GENERAL NOTES - LIGHTING

1. ALL CIRCUITS SHALL BE 2#12,#12G,3/4"C, TO NEW 20A-1P CIRCUIT BREAKER IN PANEL INDICATED UNLESS NOTED OTHERWISE.
2. BRANCH CIRCUITS EXCEEDING 150' IN LENGTH SHALL BE INCREASED TO 2#10,#10G,3/4"C UNLESS NOTED OTHERWISE.
3. REFER TO DRAWING E-801 FOR LIGHTING FIXTURE SCHEDULE.
4. REFER TO DRAWING E-801 FOR DESCRIPTIONS OF SYMBOLS,ABBREVIATIONS AND NOTES.
5. COMBINE CIRCUITS IN CONDUITS TO LIMIT TOTAL NUMBER OF CONDUITS. DERATE WIRING PER NEC ADJUSTMENT FACTORS.
6. PULLBOXES,JUNCTION BOXES AND ENCLOSURES SHALL BE NEMA 4X(STAINLESS STEEL WITH CONTINUOUS NEOPRENE GASKET AND STAINLESS STEEL HARDWARE).
7. BRANCH CIRCUIT WIRING IS SHOWN DIAGRAMMATIC. ROUTE CONDUIT IN INCONSPICIOUS LOCATIONS IN NEAT ORDERLY MANNER.
8. ALL EXPOSED UNDERGROUND CONDUITS TO BE SCH. 80 PVC UNLESS OTHERWISE NOTED.
9. FOR POLE-MOUNTED SITE LIGHTING FIXTURES, WIRE 2#12,#12G FROM J-BOX IN POLE BASE TO FIXTURE.

KEY NOTES

1. CONDUIT SHALL RUN ON UNDERSIDE OF THE PLATFORM SLAB.
2. CONDUIT SHALL RUN BELOW GRADE FROM THE EDGE OF THE STATION TO ELP1.
3. FREE STANDING STAINLESS STEEL ENCLOSURES(NEMA 4X) WITH LOCKABLE COVER. REFER TO DRAWING E-901 FOR MOUNTING DETAILS.
4. CONNECT EXIT SIGN TO EXIT SIGN CIRCUIT IN PANEL "DP".
5. CONDUITS IN THE CANOPY AREA SHALL RUN IN UNDERSIDE OF CANOPY.
6. PROVIDE J-BOX, CONDUIT AND PULL-STRING FROM BLUE PHONE TO TELEPHONE BOX.
7. TELEPHONE BOX SUPPLIED BY OTHERS. COORDINATE INSTALLATION WITH TELEPHONE COMPANY. PROVIDE CONDUIT AND PULLSTRING TO TELEPHONE COMPANY SOURCE.
8. REFER TO B/E-902 FOR MOUNTING DETAILS
9. REFER TO A/E-902 FOR MOUNTING DETAILS
10. REFER TO C/E-902 FOR MOUNTING DETAILS
11. CONDUITS WITHIN STAIR TO BE CONCEALED IN WALL WHERE POSSIBLE. EXPOSED CONDUIT TO BE PVC-COATED GALVANIZED RIDGID STEEL.
12. EXISTING STATION CONTROL UNIT MUST BE RELOCATED AND REMAIN IN USE UNTIL CONSTRUCTION OF THE MAINTENANCE CLOSET IS COMPLETED AND THE NEW STATION CONTROL UNIT IS FUNCTIONAL.

SITE LIGHTING FEEDER SCHEDULE

CIRCUIT SYMBOL	CONDUCTORS (1 PH, 2W) WITH GROUND	CONDUIT SIZE
1A	2#12 & 1#12G	3/4"
2A	2#10 & 1#10G	3/4"
3A	2#8 & 1#10G	3/4"
4A	2#6 & 1#10G	3/4"

NOTES:
1. SEE E-902 FOR TRENCH DETAILS

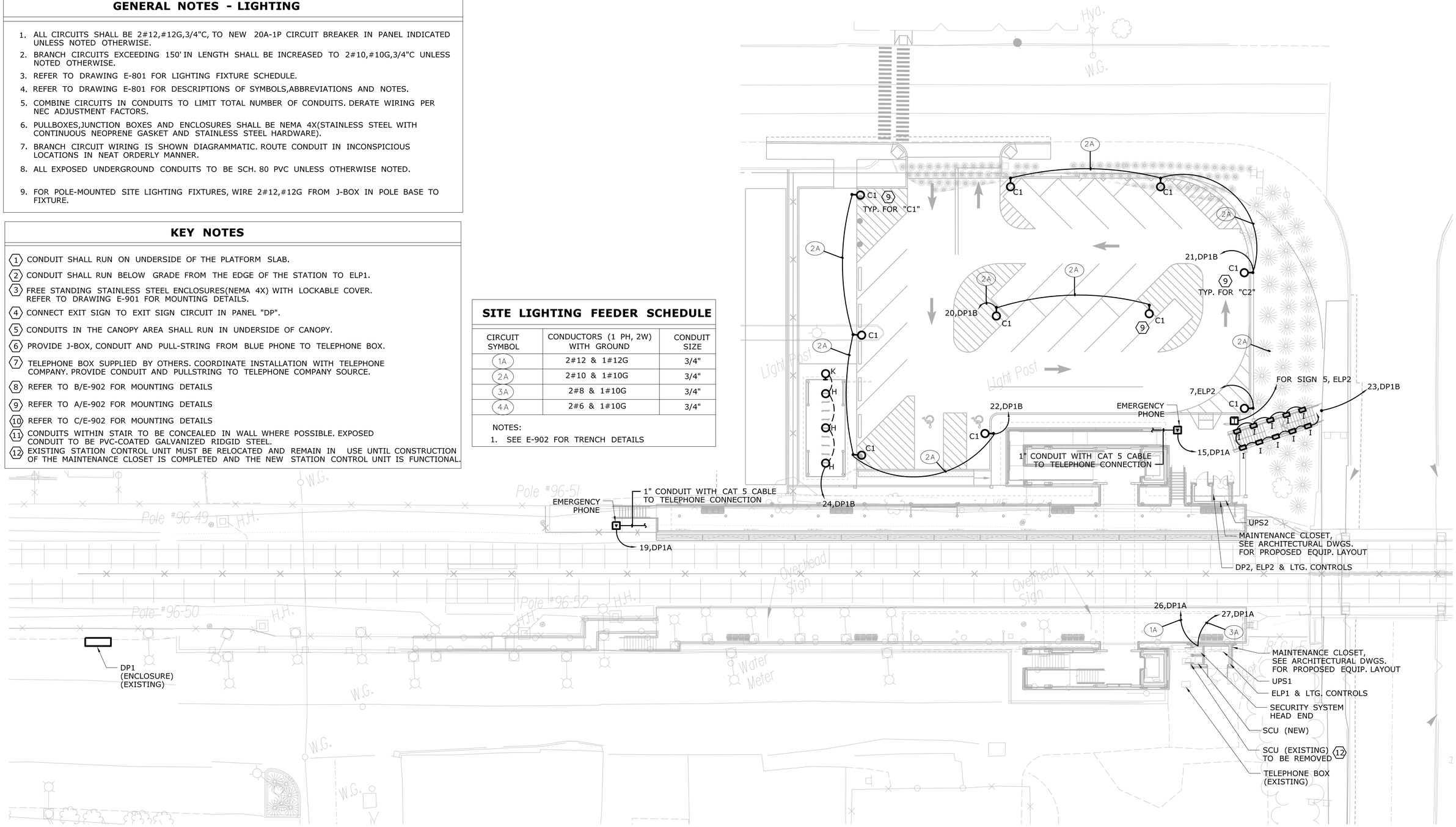

N

ELECTRICAL SITE PLAN

SCALE: 1/16"=1'-0"

REV.	DATE	REVISION DESCRIPTION	SHEET NO.

Filename: *.dgn

THE INFORMATION, INCLUDING ESTIMATED QUANTITIES OF WORK, SHOWN ON THESE SHEETS IS BASED ON LIMITED INVESTIGATIONS BY THE STATE AND IS IN NO WAY WARRANTED TO INDICATE THE CONDITIONS OF ACTUAL QUANTITIES OF WORK WHICH WILL BE REQUIRED.

Date Plotted: October 01, 2014

DESIGNER/DRAFTER: RBMC
CHECKED BY: -
SCALE AS NOTED

STATE OF CONNECTICUT
DEPARTMENT OF TRANSPORTATIO

ENGINEER: BAKER ENGINEERING
APPROVED BY:
DATE:

STATE OF CONNECTICUT · JOHN DELESKI · No. 19079 · LICENSED PROFESSIONAL ENGINEER

PROJECT TITLE:
SHORE LINE EAST RAILROAD STATIONS

TOWN: **CLINTON**

DRAWING TITLE: **ELECTRICAL SITE PLAN**

PROJECT NO. **310-0059**
DRAWING NO. **ES-101**
SHEET NO. **07.03**

GENERAL NOTES - LIGHTING

1. ALL CIRCUITS SHALL BE 2#12,#12G,3/4"C, TO NEW 20A-1P CIRCUIT BREAKER IN PANEL INDICATED UNLESS NOTED OTHERWISE.
2. BRANCH CIRCUITS EXCEEDING 150' IN LENGTH SHALL BE INCREASED TO 2#10,#10G,3/4"C UNLESS NOTED OTHERWISE.
3. REFER TO DRAWING E-801 FOR LIGHTING FIXTURE SCHEDULE.
4. REFER TO DRAWING E-801 FOR DESCRIPTIONS OF SYMBOLS,ABBREVIATIONS AND NOTES.
5. COMBINE CIRCUITS IN CONDUITS TO LIMIT TOTAL NUMBER OF CONDUITS. DERATE WIRING PER NEC ADJUSTMENT FACTORS.
6. PULLBOXES,JUNCTION BOXES AND ENCLOSURES SHALL BE NEMA 4X(STAINLESS STEEL WITH CONTINUOUS NEOPRENE GASKET AND STAINLESS STEEL HARDWARE).
7. BRANCH CIRCUIT WIRING IS SHOWN DIAGRAMMATIC. ROUTE CONDUIT IN INCONSPICIOUS LOCATIONS IN NEAT ORDERLY MANNER.
8. ALL EXPOSED UNDERGROUND CONDUITS TO BE SCH. 80 PVC UNLESS NOTED OTHERWISE.
9. FOR POLE-MOUNTED SITE LIGHTING FIXTURES, WIRE 2#12,#12G FROM J-BOX IN POLE BASE TO FIXTURE.

KEY NOTES

1. CONDUIT SHALL RUN ON UNDERSIDE OF THE PLATFORM SLAB.
2. CONDUIT SHALL RUN BELOW GRADE FROM THE EDGE OF THE STATION TO ELP1.
3. CONNECT EXIT SIGN TO EXIT SIGN CIRCUIT IN PANEL "ELP".
4. CONDUITS IN THE CANOPY AREA SHALL RUN IN UNDERSIDE OF CANOPY.
5. PROVIDE J-BOX, CONDUIT AND PULL-STRING FROM BLUE PHONE TO TELEPHONE BOX.
6. TELEPHONE BOX SUPPLIED BY OTHERS. COORDINATE INSTALLATION WITH TELEPHONE COMPANY. PROVIDE CONDUIT AND PULLSTRING TO TELEPHONE COMPANY SOURCE.
7. REFER TO B/E-902 FOR MOUNTING DETAILS
8. REFER TO A/E-902 FOR MOUNTING DETAILS
9. REFER TO C/E-902 FOR MOUNTING DETAILS

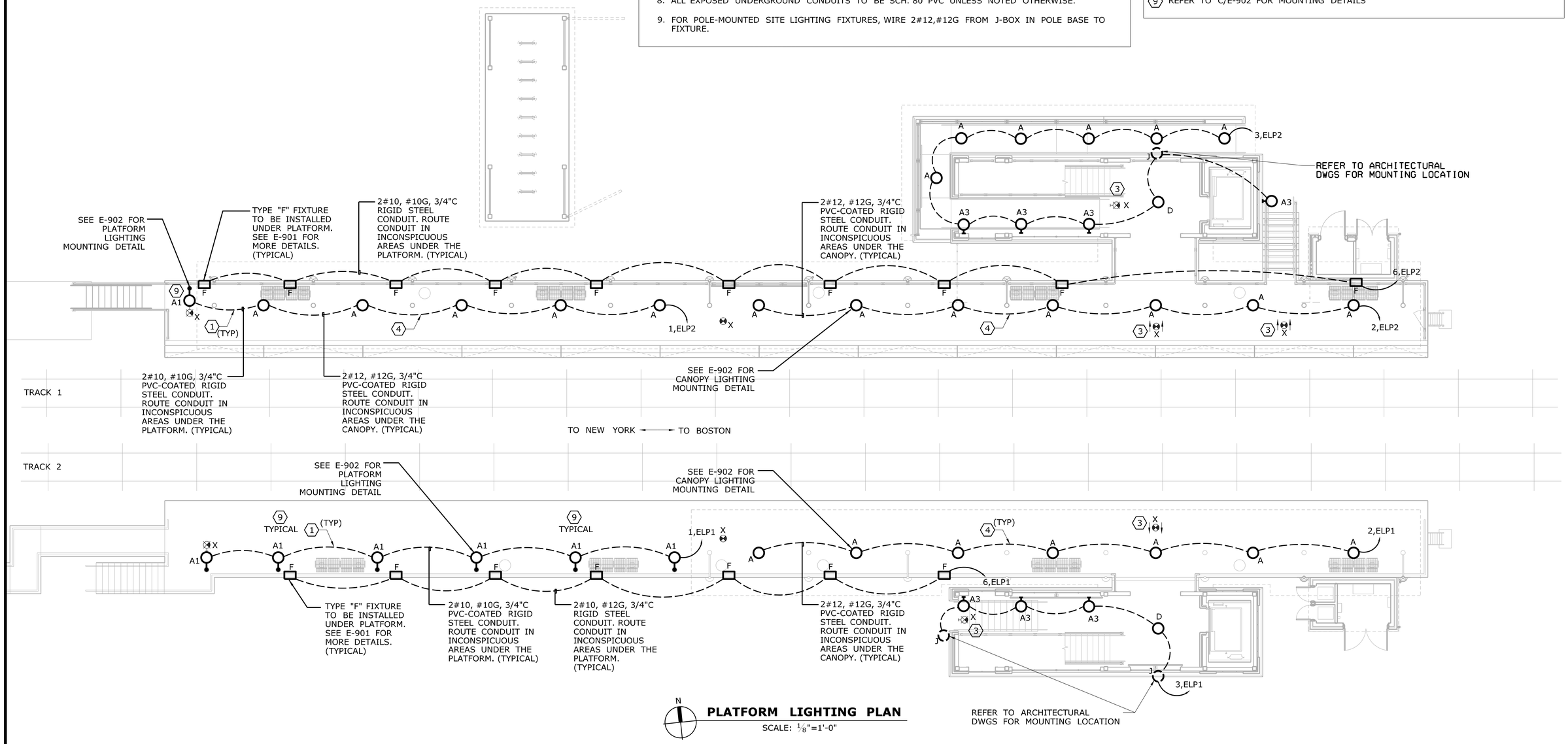

N

PLATFORM LIGHTING PLAN

SCALE: 1/8"=1'-0"

REV.	DATE	REVISION DESCRIPTION	SHEET NO.

Filename: FD_MSH_ELE_0027_0059_EL-101.dgn

THE INFORMATION, INCLUDING ESTIMATED QUANTITIES OF WORK, SHOWN ON THESE SHEETS IS BASED ON LIMITED INVESTIGATIONS BY THE STATE AND IS IN NO WAY WARRANTED TO INDICATE THE CONDITIONS OF ACTUAL QUANTITIES OF WORK WHICH WILL BE REQUIRED.

Date Plotted: October 01, 2014

DESIGNER/DRAFTER: RBMC

CHECKED BY: -

SCALE AS NOTED

STATE OF CONNECTICUT
DEPARTMENT OF TRANSPORTATIO

ENGINEER: BAKER ENGINEERING

APPROVED BY:

DATE:

STATE OF CONNECTICUT DEPARTMENT OF TRANSPORTATION LICENSED PROFESSIONAL ENGINEER No. 19079

PROJECT TITLE:

SHORE LINE EAST RAILROAD STATIONS

TOWN: **CLINTON**

DRAWING TITLE: **PLATFORM LIGHTING PLAN**

PROJECT NO. **310-0059**

DRAWING NO. **EL-101**

SHEET NO. **07.04**

GENERAL NOTES - LIGHTING

1. ALL CIRCUITS SHALL BE 2#12,#12G,3/4"C, TO NEW 20A-1P CIRCUIT BREAKER IN PANEL INDICATED UNLESS NOTED OTHERWISE.
2. BRANCH CIRCUITS EXCEEDING 150' IN LENGTH SHALL BE INCREASED TO 2#10,#10G,3/4"C UNLESS NOTED OTHERWISE.
3. REFER TO DRAWING E-801 FOR LIGHTING FIXTURE SCHEDULE.
4. REFER TO DRAWING E-801 FOR DESCRIPTIONS OF SYMBOLS,ABBREVIATIONS AND NOTES.
5. COMBINE CIRCUITS IN CONDUITS TO LIMIT TOTAL NUMBER OF CONDUITS. DERATE WIRING PER NEC ADJUSTMENT FACTORS.
6. PULLBOXES,JUNCTION BOXES AND ENCLOSURES SHALL BE NEMA 4X(STAINLESS STEEL WITH CONTINUOUS NEOPRENE GASKET AND STAINLESS STEEL HARDWARE).
7. BRANCH CIRCUIT WIRING IS SHOWN DIAGRAMMATIC. ROUTE CONDUIT IN INCONSPICIOUS LOCATIONS IN NEAT ORDERLY MANNER.
8. ALL EXPOSED UNDERGROUND CONDUITS TO BE SCH. 80 PVC UNLESS OTHERWISE NOTED.
9. FOR POLE-MOUNTED SITE LIGHTING FIXTURES, WIRE 2#12,#12G FROM J-BOX IN POLE BASE TO FIXTURE.

KEY NOTES

1. CONDUIT SHALL RUN ON UNDERSIDE OF THE PLATFORM SLAB.
2. CONDUIT SHALL RUN BELOW GRADE FROM THE EDGE OF THE STATION TO ELP1.
3. CONNECT EXIT SIGN TO EXIT SIGN CIRCUIT IN PANEL "DP".
4. CONDUITS IN THE CANOPY AREA SHALL RUN IN UNDERSIDE OF CANOPY.
5. PROVIDE J-BOX, CONDUIT AND PULL-STRING FROM BLUE PHONE TO TELEPHONE BOX.
6. TELEPHONE BOX SUPPLIED BY OTHERS. COORDINATE INSTALLATION WITH TELEPHONE COMPANY. PROVIDE CONDUIT AND PULLSTRING TO TELEPHONE COMPANY SOURCE.
7. REFER TO B/E-902 FOR MOUNTING DETAILS
8. REFER TO A/E-902 FOR MOUNTING DETAILS
9. REFER TO C/E-902 FOR MOUNTING DETAILS
10. CONDUITS WITHIN STAIR TO BE CONCEALED IN WALL WHERE POSSIBLE. EXPOSED CONDUIT TO BE PVC-COATED GALVANIZED RIDGID STEEL.

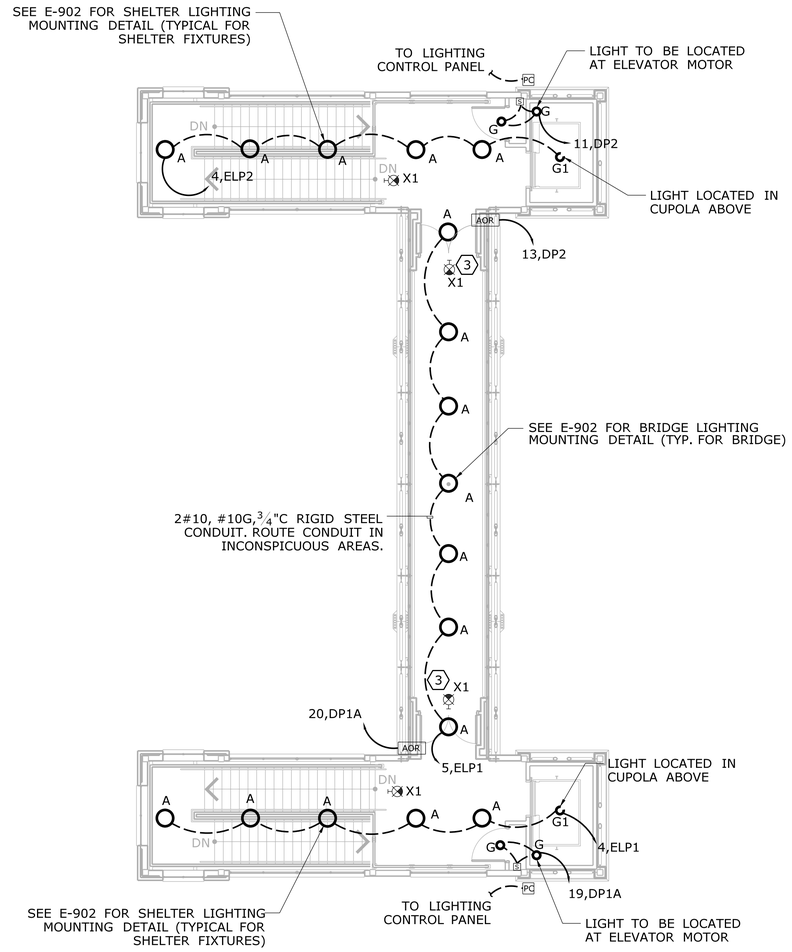

N

BRIDGE LIGHTING PLAN

SCALE: 1/8" =1'-0"

REV.	DATE	REVISION DESCRIPTION	SHEET NO.

Filename: FD_MSH_ELE_0027_0059_EL-102.dgn

THE INFORMATION, INCLUDING ESTIMATED QUANTITIES OF WORK, SHOWN ON THESE SHEETS IS BASED ON LIMITED INVESTIGATIONS BY THE STATE AND IS IN NO WAY WARRANTED TO INDICATE THE CONDITIONS OF ACTUAL QUANTITIES OF WORK WHICH WILL BE REQUIRED.

Date Plotted: October 01, 2014

DESIGNER/DRAFTER: RBMC

CHECKED BY: -

SCALE AS NOTED

STATE OF CONNECTICUT
DEPARTMENT OF TRANSPORTATIO

ENGINEER: BAKER ENGINEERING

APPROVED BY:

DATE:

STATE OF CONNECTICUT DEPARTMENT OF TRANSPORTATION LICENSED PROFESSIONAL ENGINEER No. 19079

PROJECT TITLE:

SHORE LINE EAST RAILROAD STATIONS

TOWN: **CLINTON**

DRAWING TITLE: **BRIDGE LIGHTING PLAN**

PROJECT NO. **310-0059**

DRAWING NO. **EL-102**

SHEET NO. **07.05**

KEY NOTES

1. TAMS DISPLAY SIGN SHALL BE POLE MOUNTED. REFER TO WIRING DIAGRAM ON E-702.
2. TAMS DISPLAY SIGN SHALL BE MOUNTED UNDER THE CANOPY. REFER TO WIRING DIAGRAM ON E-702.
3. PROVIDE 2#10,1#10, 3/4"C FOR RECEPTACLE CIRCUIT. CONDUIT SHALL RUN ON UNDERSIDE OF THE PLATFORM SLAB.
4. RECEPTACLE SHALL BE INSTALLED UNDER THE PLATFORM. PROVIDE WEATHERPROOF LOCKABLE ENCLOSURE "CODE KEEPER" CKRU-G8 BY RED DOT OR EQUIVALENT.
5. CONDUITS SHALL RUN BELOW GRADE FROM THE EDGE OF THE PLATFORM TO PANELBOARD.
6. TELECOMMUNICATIONS JUNCTION BOX (LOCATE IN ELEVATOR CLOSET). PROVIDE 3/4"C TO TELEPHONE SERVICE PANEL.
7. PROVIDE 30A/2P FUSED DISCONNECT SWITCH (LOCATE IN ELEVATOR CLOSET) WITH SOLID NEUTRAL TO SUPPLY TWO(2) 120V, 20A CIRCUITS TO ELEVATOR CAR. ONE CIRCUIT IS FOR ELEVATOR CAR LIGHTING, RECEPTACLE AND VENTILATION. ONE CIRCUIT IS FOR AIR CONDITIONING AND HEATING WHEN NECESSARY. PROVIDE 2#12,1#12G, 3/4"C FOR EACH CIRCUIT.
8. 208V,3 POLE,FUSIBLE HEAVY DUTY DISCONNECT SWITCH WITH (3)60A DUAL ELEMENT FUSE (LOCATE IN ELEVATOR CLOSET)
9. PROVIDE J-BOX, PVC-COATED RIGID METAL 3/4" DIA. CONDUIT FROM CAMERA LOCATION TO SECURITY SYSTEM HEAD-END. CONDUIT TO BE RIGIDLY MOUNTED TO CANOPY COLUMNS AND UNDERSIDE OF PLAFORMS.

GENERAL NOTES - POWER

1. ALL EXPOSED CONDUIT RUNS SHALL BE GALVANIZED RIGID STEEL PVC COATED CONDUIT WITH POLYURETHANE INTERNAL COATING. ALL CONDUIT RUNS LOCATED INSIDE ROOMS SHALL BE RGS CONDUIT. ALL CONDUIT EMBEDDED IN CONCRETE SHALL BE SCH 80 PVC CONDUIT. ALL CONDUIT DIRECT BURIED IN TRENCH SHALL BE SCH 80 PVC CONDUIT.
2. ALL BRANCH CIRCUITS EXCEEDING 150' IN LENGTH SHALL BE 2#10,#10G., 3/4"C. UNLESS NOTED OTHERWISE.
3. DEVICES SHALL BE LABELED WITH SOURCE PANEL AND CIRCUIT NUMBER(S).
4. REFER TO DRAWING E-801 FOR DESCRIPTIONS OF SYMBOLS, ABBREVIATIONS AND NOTES. COMBINE CIRCUITS IN CONDUITS TO LIMIT TOTAL NUMBER OF CONDUITS. DERATE WIRING PER SCHEDULES.
5. PULLBOXES,JUNCTION BOXES AND ENCLOSURES SHALL BE NEMA 4X(STAINLESS STEEL WITH CONTINUOUS NEOPRENE GASKET AND STAINLESS STEEL HARDWARE).
6. BRANCH CIRCUIT WIRING IS SHOWN DIAGRAMMATIC. ROUTE CONDUIT IN INCONSPICIOUS LOCATIONS IN NEAT ORDERLY MANNER.

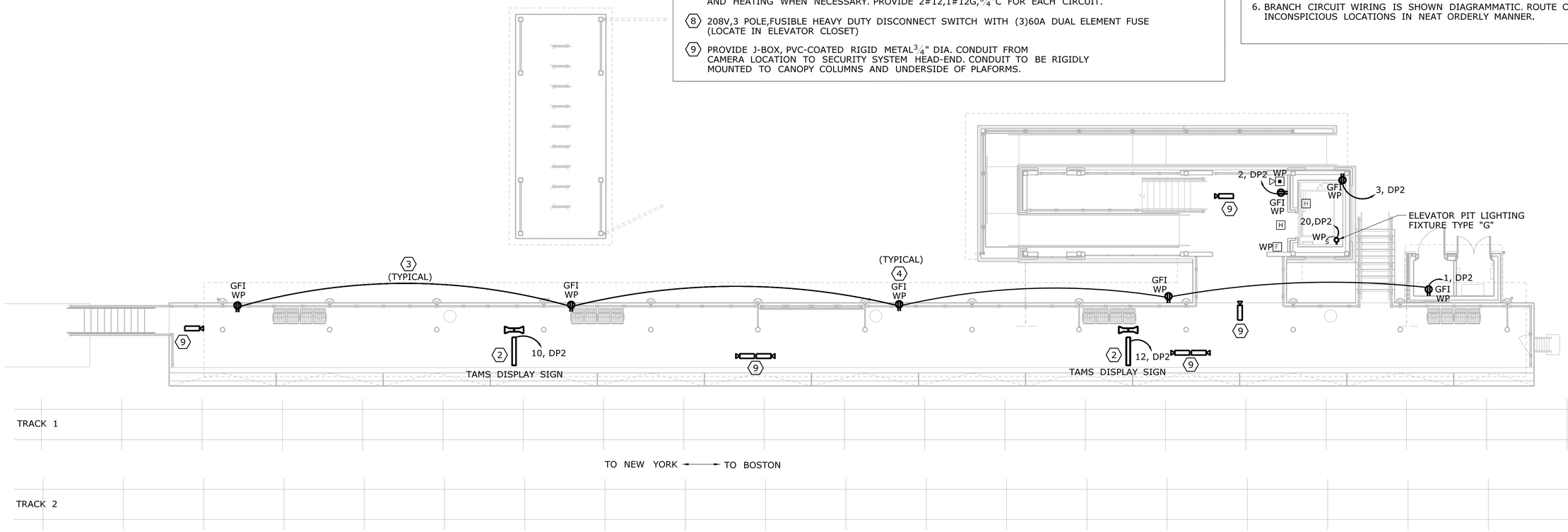

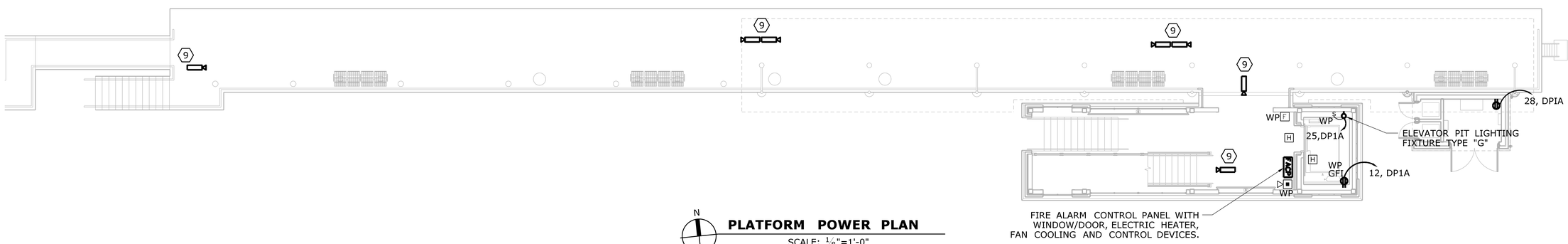

N

PLATFORM POWER PLAN

SCALE: 1/8"=1'-0"

REV.	DATE	REVISION DESCRIPTION	SHEET NO.

Filename: FD_MSH_ELE_0027_0059_EP-101.dgn

THE INFORMATION, INCLUDING ESTIMATED QUANTITIES OF WORK, SHOWN ON THESE SHEETS IS BASED ON LIMITED INVESTIGATIONS BY THE STATE AND IS IN NO WAY WARRANTED TO INDICATE THE CONDITIONS OF ACTUAL QUANTITIES OF WORK WHICH WILL BE REQUIRED.

Date Plotted: October 01, 2014

DESIGNER/DRAFTER: RBMC

CHECKED BY: -

SCALE AS NOTED

STATE OF CONNECTICUT
DEPARTMENT OF TRANSPORTATIO

ENGINEER: BAKER ENGINEERING

APPROVED BY:

DATE:

STATE OF CONNECTICUT DEPARTMENT OF TRANSPORTATION LICENSED PROFESSIONAL ENGINEER 36-19079

PROJECT TITLE:

SHORE LINE EAST RAILROAD STATIONS

TOWN: **CLINTON**

DRAWING TITLE: **PLATFORM POWER PLAN**

PROJECT NO. **310-0059**

DRAWING NO. **EP-101**

SHEET NO. **07.06**

GENERAL NOTES - POWER

1. ALL EXPOSED CONDUIT RUNS SHALL BE GALVANIZED RIGID STEEL PVC COATED CONDUIT WITH POLYURETHANE INTERNAL COATING. ALL CONDUIT RUNS LOCATED INSIDE ROOMS SHALL BE RGS CONDUIT. ALL CONDUIT EMBEDDED IN CONCRETE SHALL BE SCH 80 PVC CONDUIT. ALL CONDUIT DIRECT BURIED IN TRENCH SHALL BE SCH 80 PVC CONDUIT.
2. ALL BRANCH CIRCUITS EXCEEDING 150' IN LENGTH SHALL BE 2#10,#10G., 3/4"C. UNLESS NOTED OTHERWISE.
3. DEVICES SHALL BE LABELED WITH SOURCE PANEL AND CIRCUIT NUMBER(S).
4. REFER TO DRAWING E-801 FOR DESCRIPTIONS OF SYMBOLS, ABBREVIATIONS AND NOTES. COMBINE CIRCUITS IN CONDUITS TO LIMIT TOTAL NUMBER OF CONDUITS. DERATE WIRING PER SCHEDULES.
5. PULLBOXES,JUNCTION BOXES AND ENCLOSURES SHALL BE NEMA 4X(STAINLESS STEEL WITH CONTINUOUS NEOPRENE GASKET AND STAINLESS STEEL HARDWARE).
6. BRANCH CIRCUIT WIRING IS SHOWN DIAGRAMMATIC. ROUTE CONDUIT IN INCONSPICIOUS LOCATIONS IN NEAT ORDERLY MANNER.

KEY NOTES

1. TAMS DISPLAY SIGN SHALL BE POLE MOUNTED. REFER TO WIRING DIAGRAM ON E-702.
2. TAMS DISPLAY SIGN SHALL BE MOUNTED UNDER THE CANOPY. REFER TO WIRING DIAGRAM ON E-702.
3. PROVIDE 2#10,1#10,3/4"C FOR RECEPTACLE CIRCUIT. CONDUIT SHALL RUN ON UNDERSIDE OF THE PLATFORM SLAB.
4. RECEPTACLE SHALL BE INSTALLED UNDER THE PLATFORM. PROVIDE WEATHERPROOF LOCKABLE ENCLOSURE "CODE KEEPER" CKRU-G8 BY RED DOT OR EQUIVALENT.
5. CONDUITS SHALL RUN BELOW GRADE FROM THE EDGE OF THE PLATFORM TO PANELBOARD.
6. TELECOMMUNICATIONS JUNCTION BOX (LOCATE IN ELEVATOR CLOSET). PROVIDE 3/4"C TO TELEPHONE SERVICE PANEL.
7. PROVIDE 30A/2P FUSED DISCONNECT SWITCH (LOCATE IN IN ELEVATOR CLOSET) WITH SOLID NEUTRAL TO SUPPLY TWO(2) 120V, 20A CIRCUITS TO ELEVATOR CAR. ONE CIRCUIT IS FOR ELEVATOR CAR LIGHTING, RECEPTACLE AND VENTILATION. ONE CIRCUIT IS FOR AIR CONDITIONING AND HEATING WHEN NECESSARY. PROVIDE 2#12,1#12G,3/4"C FOR EACH CIRCUIT.
8. 208V,3 POLE,FUSIBLE HEAVY DUTY DISCONNECT SWITCH WITH (3)60A DUAL ELEMENT FUSE (LOCATE IN ELEVATOR CLOSET)
9. PROVIDE J-BOX, PVC-COATED RIGID METAL3/4" DIA. CONDUIT FROM CAMERA LOCATION TO SECURITY SYSTEM HEAD-END. CONDUIT TO BE RIGIDLY MOUNTED TO CANOPY COLUMNS AND UNDERSIDE OF PLAFORMS.
10. PROVIDE ELECTRONIC BRAKE RELEASE AND ASSOCIATED CONDUIT, WIRE & CONNECTIONS FOR ELEVATOR, COORDINATED LOCATION OF EQUIPMENT IN CONTROL CLOSET WITH ELEVATOR MANUFACTURER.

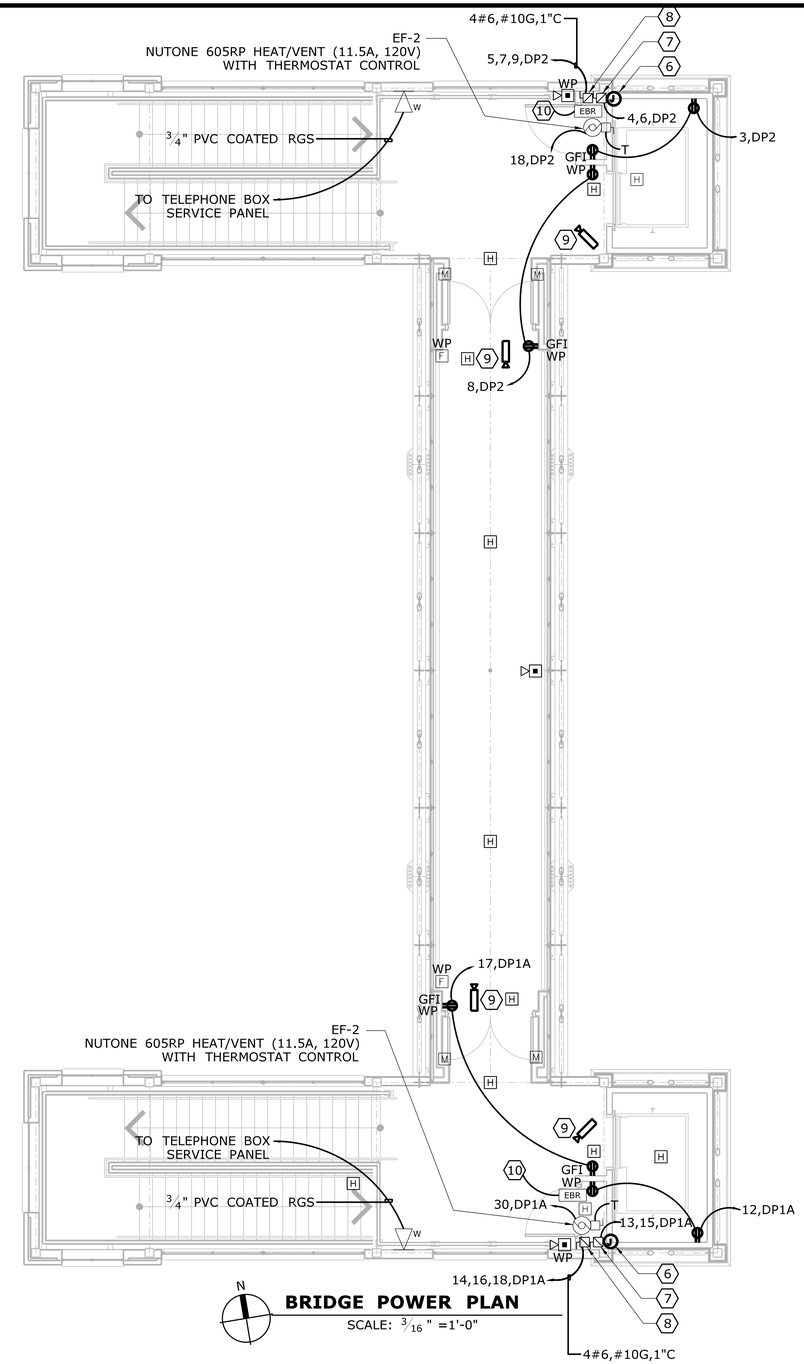

BRIDGE POWER PLAN

SCALE: 3/16" =1'-0"

REV.	DATE	REVISION DESCRIPTION	SHEET NO.

Filename: FD_MSH_ELE_0154_0062_EP-102.dgn

THE INFORMATION, INCLUDING ESTIMATED QUANTITIES OF WORK, SHOWN ON THESE SHEETS IS BASED ON LIMITED INVESTIGATIONS BY THE STATE AND IS IN NO WAY WARRANTED TO INDICATE THE CONDITIONS OF ACTUAL QUANTITIES OF WORK WHICH WILL BE REQUIRED.

Date Plotted: October 01, 2014

DESIGNER/DRAFTER: RBMC

CHECKED BY: -

SCALE AS NOTED

STATE OF CONNECTICUT
DEPARTMENT OF TRANSPORTATIO

ENGINEER: BAKER ENGINEERING

APPROVED BY:

DATE:

STATE OF CONNECTICUT · JOSEPH DELSANTO · 36,1079 · LICENSED · PROFESSIONAL ENGINEER

PROJECT TITLE:

SHORE LINE EAST RAILROAD STATIONS

TOWN: **CLINTON**

DRAWING TITLE: **BRIDGE POWER PLAN**

PROJECT NO. **310-0059**

DRAWING NO. **EP-102**

SHEET NO. **07.07**

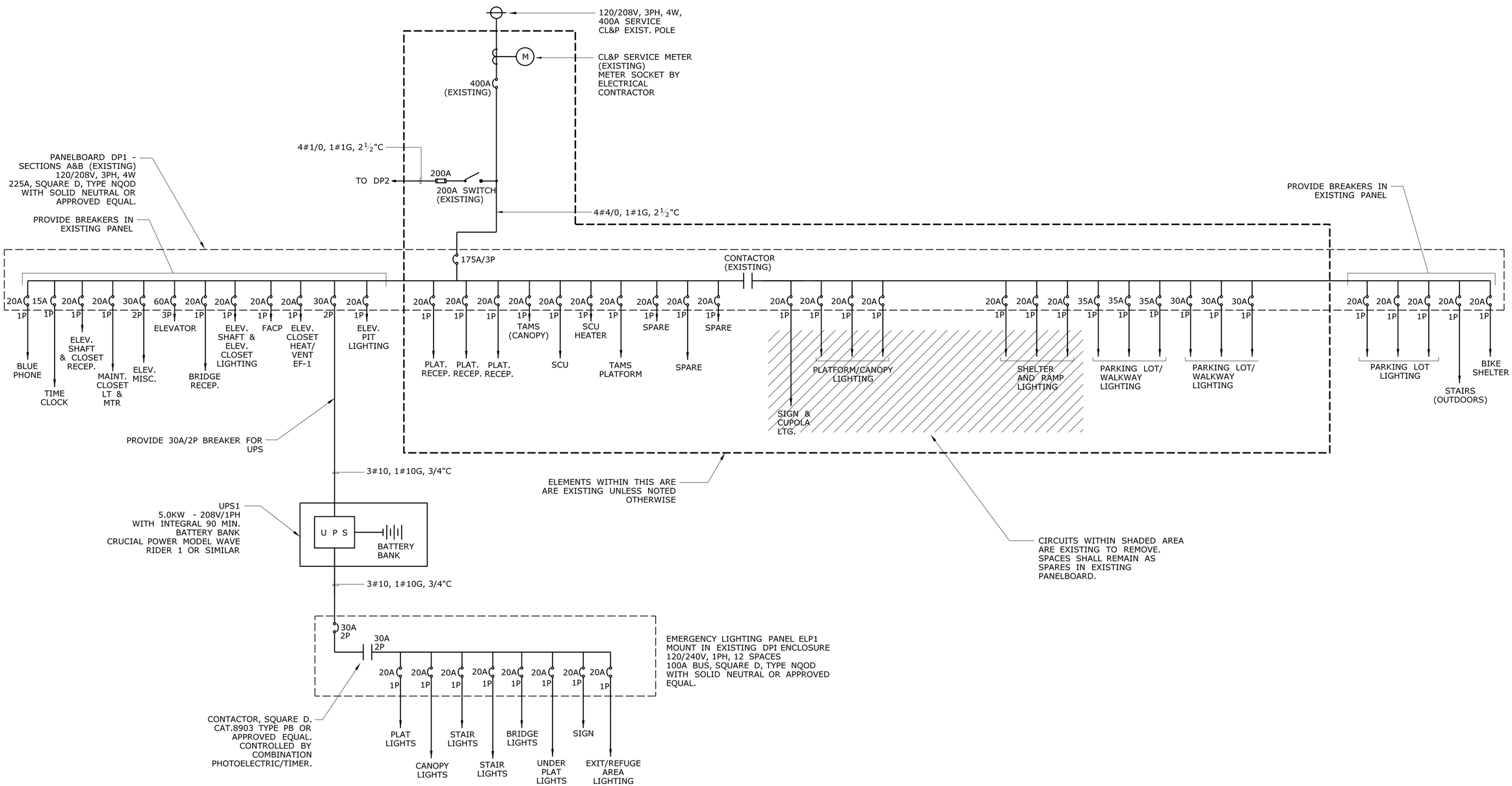

SOUTH PLATFORM POWER RISER DIAGRAM

SCALE: N.T.S.

REV.	DATE	REVISION DESCRIPTION	SHEET NO.

Filename: FD_MSH_ELE_0027_0059_E-701.dgn

THE INFORMATION, INCLUDING ESTIMATED QUANTITIES OF WORK, SHOWN ON THESE SHEETS IS BASED ON LIMITED INVESTIGATIONS BY THE STATE AND IS IN NO WAY WARRANTED TO INDICATE THE CONDITIONS OF ACTUAL QUANTITIES OF WORK WHICH WILL BE REQUIRED.

Date Plotted: October 01, 2014

DESIGNER/DRAFTER: RBMC

CHECKED BY: -

SCALE AS NOTED

STATE OF CONNECTICUT
DEPARTMENT OF TRANSPORTATIO

ENGINEER: BAKER ENGINEERING

APPROVED BY:

DATE:

STATE OF CONNECTICUT
JOHN F. DELSANTO
No. 19079
LICENSED
PROFESSIONAL ENGINEER

PROJECT TITLE:

SHORE LINE EAST RAILROAD STATIONS

TOWN: **CLINTON**

DRAWING TITLE: **RISER DIAGRAM SOUTH PLATFORM**

PROJECT NO. **310-0059**

DRAWING NO. **E-701**

SHEET NO. **07.08**

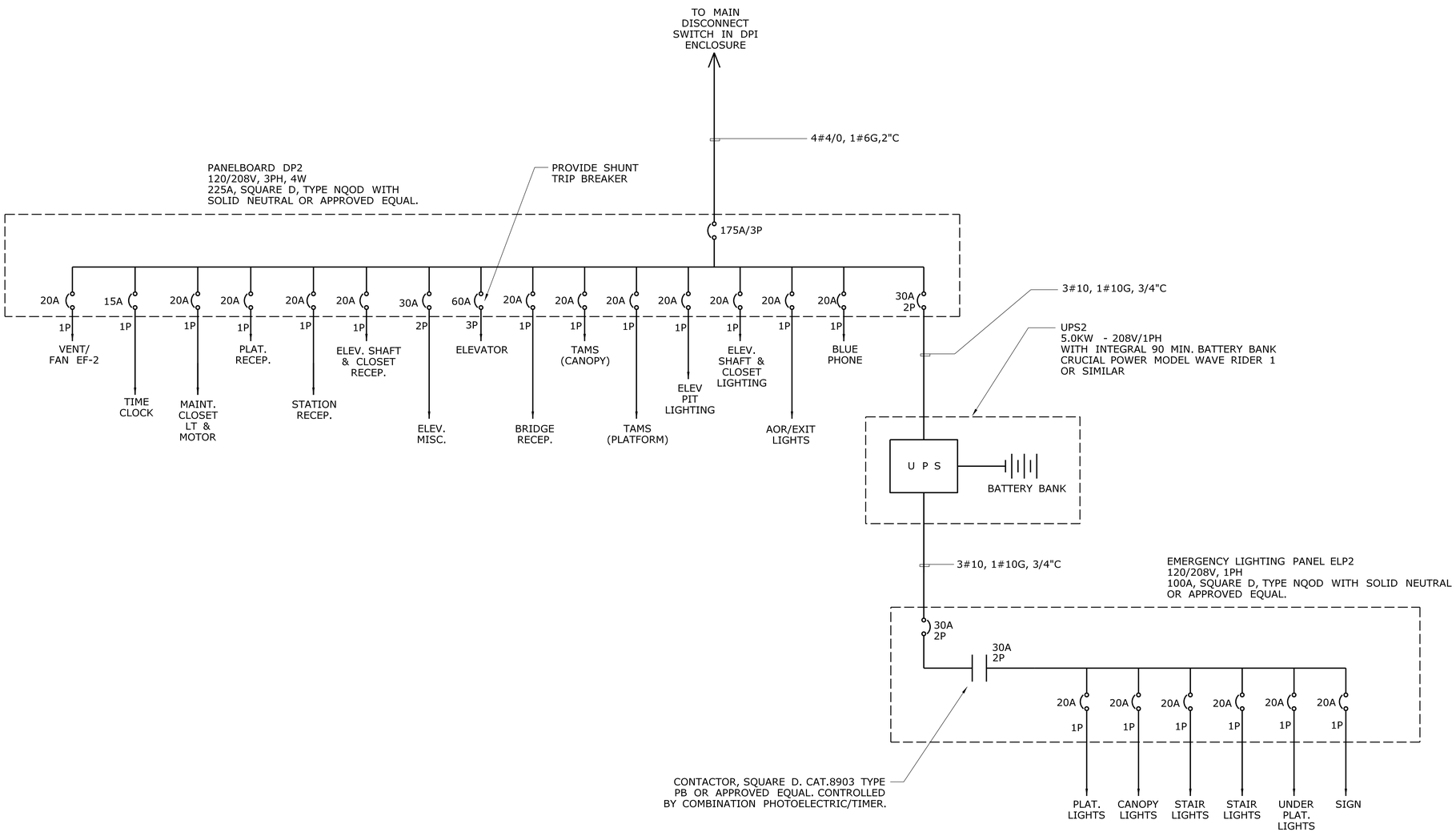

NORTH PLATFORM POWER RISER DIAGRAM

SCALE: N.T.S.

REV.	DATE	REVISION DESCRIPTION	SHEET NO.

Filename: FD_MSH_ELE_0027_0059_E-702.dgn

THE INFORMATION, INCLUDING ESTIMATED QUANTITIES OF WORK, SHOWN ON THESE SHEETS IS BASED ON LIMITED INVESTIGATIONS BY THE STATE AND IS IN NO WAY WARRANTED TO INDICATE THE CONDITIONS OF ACTUAL QUANTITIES OF WORK WHICH WILL BE REQUIRED.

Date Plotted: October 01, 2014

DESIGNER/DRAFTER: RBMC

CHECKED BY: -

SCALE AS NOTED

STATE OF CONNECTICUT
DEPARTMENT OF TRANSPORTATIO

ENGINEER: BAKER ENGINEERING

APPROVED BY:

DATE:

STATE OF CONNECTICUT NORTH DELEGATION No. 19079 LICENSED PROFESSIONAL ENGINEER

PROJECT TITLE:

SHORE LINE EAST RAILROAD STATIONS

TOWN: **CLINTON**

DRAWING TITLE: **RISER DIAGRAM NORTH PLATFORM**

PROJECT NO. **310-0059**

DRAWING NO. **E-702**

SHEET NO. **07.09**

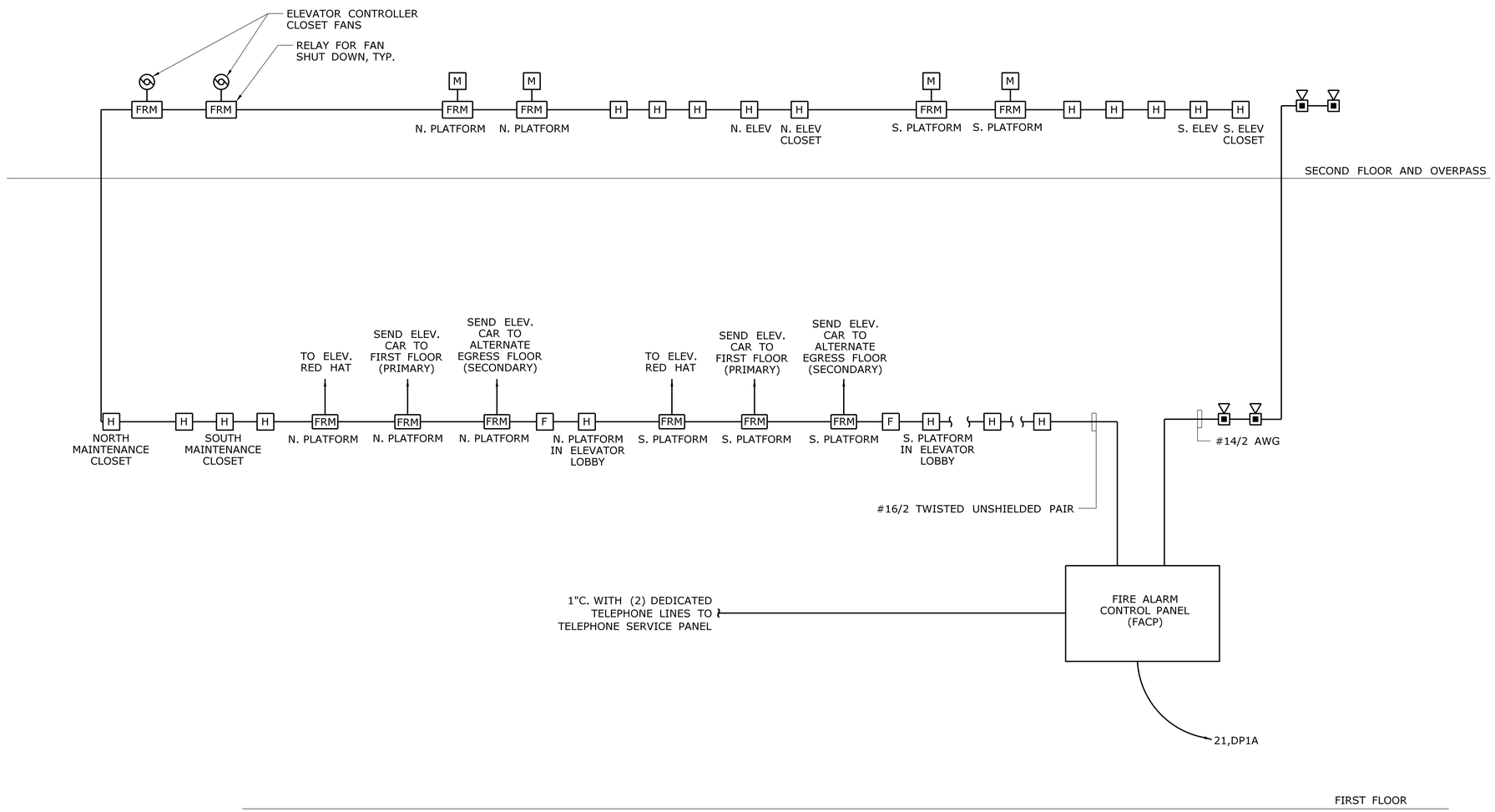

FIRE ALARM RISER DIAGRAM

SCALE: N.T.S.

REV.	DATE	REVISION DESCRIPTION	SHEET NO.

Filename: FD.MSH.ELE.0027.0059.E-703.dgn

THE INFORMATION, INCLUDING ESTIMATED QUANTITIES OF WORK, SHOWN ON THESE SHEETS IS BASED ON LIMITED INVESTIGATIONS BY THE STATE AND IS IN NO WAY WARRANTED TO INDICATE THE CONDITIONS OF ACTUAL QUANTITIES OF WORK WHICH WILL BE REQUIRED.

Date Plotted: October 01, 2014

DESIGNER/DRAFTER: RBMC

CHECKED BY: -

SCALE AS NOTED

STATE OF CONNECTICUT
DEPARTMENT OF TRANSPORTATIO

ENGINEER: BAKER ENGINEERING

APPROVED BY:

DATE:

STATE OF CONNECTICUT NORTH DELEGATION No. 19079 LICENSED PROFESSIONAL ENGINEER

PROJECT TITLE:

SHORE LINE EAST RAILROAD STATIONS

TOWN: **CLINTON**

DRAWING TITLE: **RISER DIAGRAM FIRE ALARM**

PROJECT NO. **310-0059**

DRAWING NO. **E-703**

SHEET NO. **07.10**

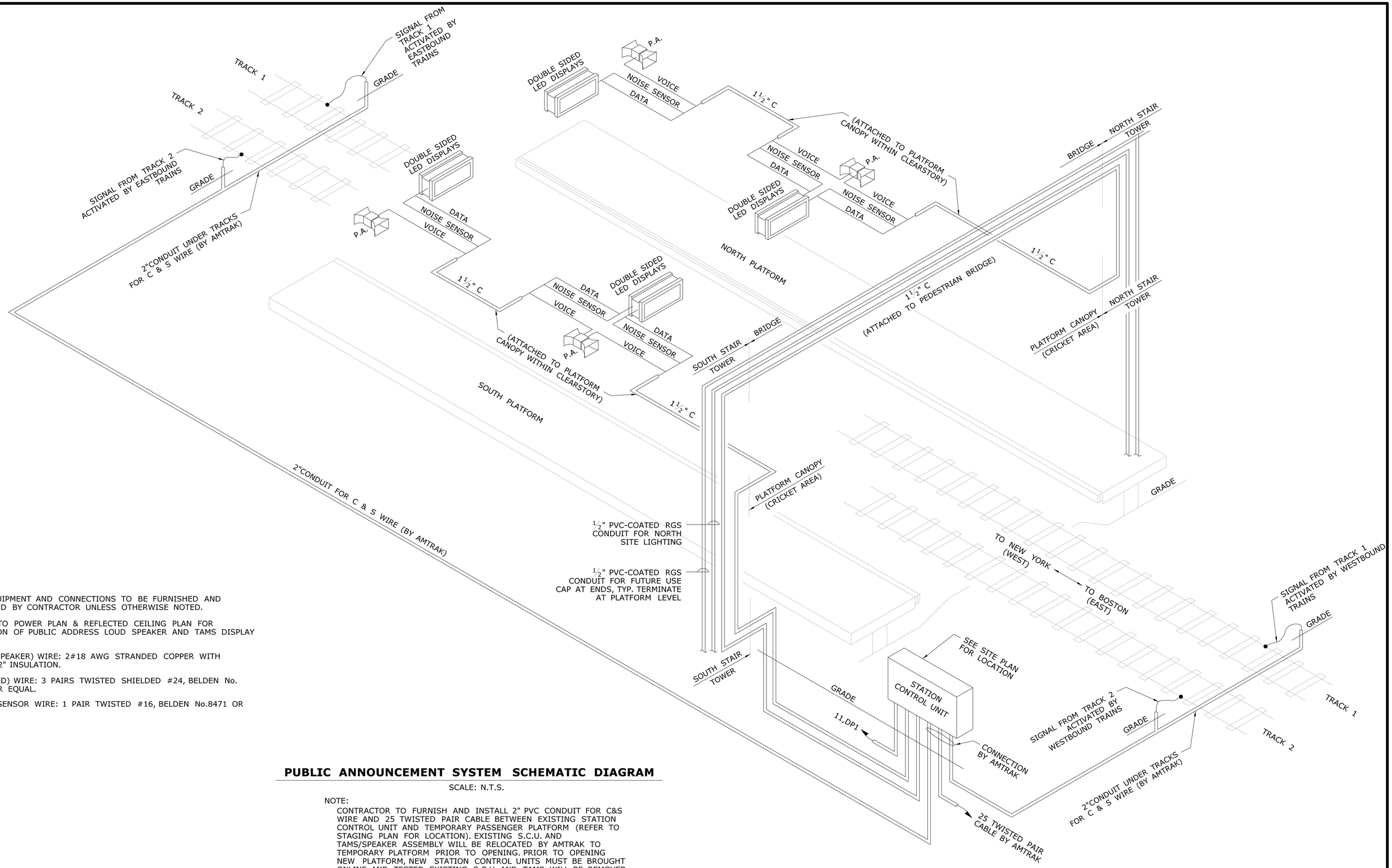

NOTES:

1. ALL EQUIPMENT AND CONNECTIONS TO BE FURNISHED AND INSTALED BY CONTRACTOR UNLESS OTHERWISE NOTED.
2. REFER TO POWER PLAN & REFLECTED CEILING PLAN FOR LOCATION OF PUBLIC ADDRESS LOUD SPEAKER AND TAMS DISPLAY SIGNS.
3. VOICE(SPEAKER) WIRE: 2#18 AWG STRANDED COPPER WITH "XXHW-2" INSULATION.
4. DATA(LED) WIRE: 3 PAIRS TWISTED SHIELDED #24, BELDEN No. 9830 OR EQUAL.
5. NOISE SENSOR WIRE: 1 PAIR TWISTED #16, BELDEN No.8471 OR EQUAL.

PUBLIC ANNOUNCEMENT SYSTEM SCHEMATIC DIAGRAM

SCALE: N.T.S.

NOTE:

CONTRACTOR TO FURNISH AND INSTALL 2" PVC CONDUIT FOR C&S WIRE AND 25 TWISTED PAIR CABLE BETWEEN EXISTING STATION CONTROL UNIT AND TEMPORARY PASSENGER PLATFORM (REFER TO STAGING PLAN FOR LOCATION). EXISTING S.C.U. AND TAMS/SPEAKER ASSEMBLY WILL BE RELOCATED BY AMTRAK TO TEMPORARY PLATFORM PRIOR TO OPENING. PRIOR TO OPENING NEW PLATFORM, NEW STATION CONTROL UNITS MUST BE BROUGHT ONLINE AND TESTED. EXISTING S.C.U. AND TAMS WILL BE REMOVED BY AMTRAK.

REV.	DATE	REVISION DESCRIPTION	SHEET NO.

Filename: FD_MSH_ELE_0027_0059_E-704.dgn

THE INFORMATION, INCLUDING ESTIMATED QUANTITIES OF WORK, SHOWN ON THESE SHEETS IS BASED ON LIMITED INVESTIGATIONS BY THE STATE AND IS IN NO WAY WARRANTED TO INDICATE THE CONDITIONS OF ACTUAL QUANTITIES OF WORK WHICH WILL BE REQUIRED.

Date Plotted: October 01, 2014

DESIGNER/DRAFTER: RBMC
CHECKED BY: -
SCALE AS NOTED

STATE OF CONNECTICUT
DEPARTMENT OF TRANSPORTATIO

ENGINEER: BAKER ENGINEERING
APPROVED BY:
DATE:

STATE OF CONNECTICUT
JOSEPH DELENICK
No. 19079
LICENSED
PROFESSIONAL ENGINEER

PROJECT TITLE:
SHORE LINE EAST
RAILROAD STATIONS

TOWN: CLINTON

DRAWING TITLE:
RISER DIAGRAM
P.A.

PROJECT NO. 310-0059
DRAWING NO. E-704
SHEET NO. 07.11

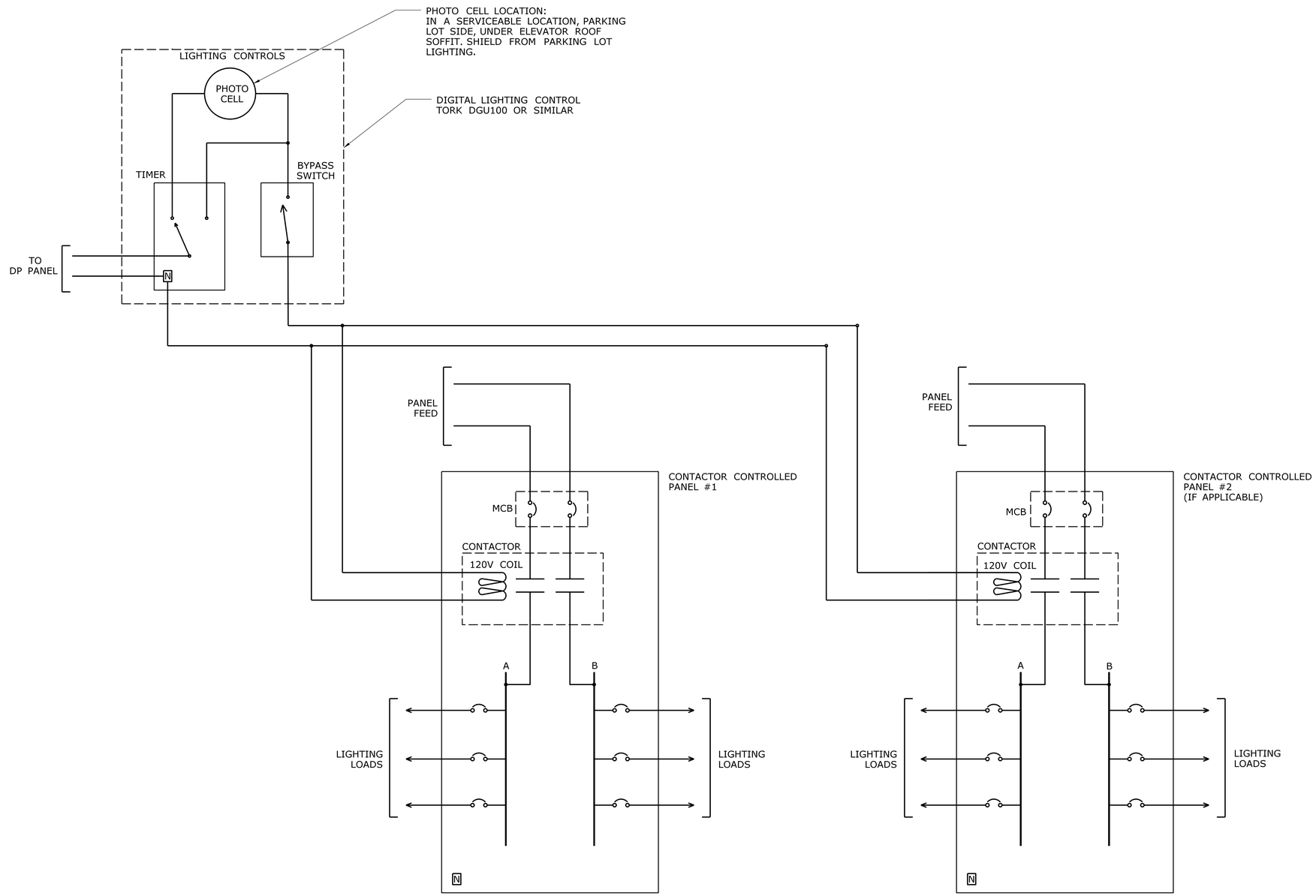

LIGHTING CONTROL SCHEMATIC

SCALE: N.T.S.

NOTES:
1. SEE RISER DIAGRAMS (SHEETS E-701 & 702) FOR MODELS AND SIZES.

REV.	DATE	REVISION DESCRIPTION	SHEET NO.

Filename: FD_MSH_ELE_0027_0059_E-705.dgn

THE INFORMATION, INCLUDING ESTIMATED QUANTITIES OF WORK, SHOWN ON THESE SHEETS IS BASED ON LIMITED INVESTIGATIONS BY THE STATE AND IS IN NO WAY WARRANTED TO INDICATE THE CONDITIONS OF ACTUAL QUANTITIES OF WORK WHICH WILL BE REQUIRED.

Date Plotted: October 01, 2014

DESIGNER/DRAFTER: RBMC
CHECKED BY: -
SCALE AS NOTED

STATE OF CONNECTICUT
DEPARTMENT OF TRANSPORTATIO

ENGINEER: BAKER ENGINEERING
APPROVED BY:
DATE:

STATE OF CONNECTICUT DEPARTMENT OF TRANSPORTATION LICENSED PROFESSIONAL ENGINEER 34,19079

PROJECT TITLE:
SHORE LINE EAST RAILROAD STATIONS

TOWN: **CLINTON**

DRAWING TITLE: **LIGHTING CONTROL SCHEMATIC**

PROJECT NO. **310-0059**
DRAWING NO. **E-705**
SHEET NO. **07.12**

ELECTRICAL SYMBOL LIST

SYMBOL	DESCRIPTION	SYMBOL	DESCRIPTION
	SURFACE MOUNTED PANELBOARD		SITE LIGHTING FIXTURE
	DISCONNECT SWITCH		EXTERIOR BOLLARD LIGHTING FIXTURE
	FUSED DISCONNECT SWITCH		EXTERIOR WALL RECESSED LIGHTING FIXTURE
	ELECTRICAL MOTOR		WALL MOUNTED LIGHTING FIXTURE
T	TRANSFORMER		WALL MOUNTED EXIT SIGN, DOUBLE FACED
	ELECTRICAL METER		WALL MOUNTED EXIT SIGN
	BRANCH CIRCUIT WIRING, CONCEALED IN WALLS OR CEILINGS		CEILING MOUNTED EXIT SIGN
	HOMERUN TO PANELBOARD, UNLESS INDICATED OTHERWISE SHALL BE CONNECTED TO A 1 POLE, 20 AMP CIRCUIT BREAKER		CEILING MOUNTED EXIT SIGN, DOUBLE FACED
	BRANCH CIRCUIT WIRING, SWITCHED	FACP	FIRE ALARM CONTROL PANEL
J . J	JUNCTION BOX		WALL MOUNTED COMBINATION HORN/STROBE LIGHT WITH AN ADA 15/75 CANDELA STROBE MOUNT AT 6'-8" AFF
	DUPLEX WALL MOUNTED RECEPTACLE		WALL MOUNTED ADA 15/75 CANDELA STROBE UNIT ONLY
a	DUPLEX RECEPTACLE, MOUNT ABOVE COUNTER HEIGHT	F	WALL MOUNTED FIRE ALARM MANUAL PULL STATION, MOUNT AT 48" AFF
c	DUPLEX RECEPTACLE, FLUSH MOUNTED ON CEILING	S	SMOKE DETECTOR
GFI	DUPLEX RECEPTACLE WITH GROUND FAULT CIRCUIT INTERRUPTION	H	HEAT DETECTOR - TEMPERATURE RATING AS INDICATED ON DRAWINGS
WP	DUPLEX RECEPTACLE WITH WEATHERPROOF COVER	S	SMOKE DETECTOR FOR ELEVATOR RECALL CONTROLS
	SPECIAL PURPOSE CONNECTION	FMM	FIRE ALARM MONITOR MODULE
	SPECIAL PURPOSE RECEPTACLE, NEMA CONFIGURATION AS INDICATED	FRM	FIRE ALARM RELAY MODULE
S	SINGLE POLE TOGGLE SWITCH	AOR	AREA OF REFUGE SIGN
M	MAGNETIC DOOR HOLD OPEN	TC	2-CHANNEL ASTRONOMICAL TIMECLOCK
PC	PHOTOCELL		CCTV CAMERA. SEE SPECIFICATIONS FOR MORE INFORMATION.
	PUBLIC ADDRESS LOUD SPEAKER	EBR	ELECTRONIC BRAKE RELEASE
		W	WALL MOUNTED AREA OF ASSISTED RESCUE PHONE

ELECTRICAL ABBREVIATIONS

A/AMP	AMPERE	FACP	FIRE ALARM CONTROL PANEL	PVC	POLYVINYL CHLORIDE CONDUIT
AC	ALTERNATING CURRENT	FC	FOOT CANDLE	RGS	RIGID GALVANIZED STEEL CONDUIT
ACU	AIR CONDITIONING UNIT	G	GROUND	RM	ROOM
AFF	ABOVE FINISHED FLOOR	GFCI	GROUND FAULT INTERRUPTER	RR	REMOVE AND REPLACE ON NEW SURFACE
AFG	ABOVE FINISHED GRADE	HP	HORSE POWER	RTU	ROOFTOP UNIT
AHU	AIR HANDLING UNIT	HPS	HIGH PRESSURE SODIUM	SE	SECONDARY ELECTRICAL SERVICE
AIC	AMPS INTERRUPTING CURRENT	HR	HOUR	SPEC	SPECIFICATION
AWG	AMERICAN WIRE GAUGE	HZ	HERTZ	SWBD	SWITCHBOARD
C	CONDUIT	IG	ISOLATED GROUND	TELE	TELECOMMUNICATIONS/TELEPHONE
CATV	CABLE TELEVISION	IN	INCHES	TV	TELEVISION
C/B	CIRCUIT BREAKER	JB	JUNCTION BOX	TVSS	TRANSIENT VOLTAGE SURGE SUPPRESSION
CKT	CIRCUIT	KCMIL	THOUSAND CIRCULAR MILS	T/TX	TRANSFORMER
COMP	COMPRESSOR	KVA	KILOVOLT AMPERE	TYP	TYPICAL
CP	CONDENSATE PUMP	KW	KILOWATT	UH	UNIT HEATER
CT	CURRENT TRANSFORMER	MAX	MAXIMUM	V	VOLTS
CU	CONDENSING UNIT, COPPER	MCCB	MOLDED CASE CIRCUIT BREAKER	VA	VOLT AMPERE
CUH	CABINET UNIT HEATER	MH	METAL HALIDE	VAC	VOLTS ALTERNATING CURRENT
°	DEGREE	MIN	MINIMUM	W	WATT, WIRE
DIA/Ø	DIAMETER	MLO	MAIN LUGS ONLY	WG	WIRE GUARD
DN	DOWN	NA	NOT APPLICABLE	WP	WEATHERPROOF
DWG	DRAWING	NEC	NATIONAL ELECTRIC CODE		
EF	EXHAUST FAN	NIC	NOT IN CONTRACT		
ELEC	ELECTRICAL	NL	NEW LOCATION OF EXISTING RELOCATED		
ELEV	ELEVATOR	NR	NEW TO REPLACE EXISTING		
EMT	ELECTRIC METALLIC TUBING	NTS	NOT TO SCALE		
EUH	ELECTRIC UNIT HEATER	P	POLE		
EWC	ELECTRIC WATER COOLER	PE	PRIMARY ELECTRICAL SERVICE		
EWH	ELECTRIC WATER HEATER	PF	POWER FACTOR		
F	FAHRENHEIT	PH/Ø	PHASE		
FA	FIRE ALARM	PNL	PANEL		

LIGHT FIXTURE SCHEDULE

TYPE	MANUFACTURER (OR APPROVED EQUAL)	VOLTAGE	LAMPS	FIXTURE DESCRIPTION
A	LUMEC DOS-40W30LED4K-LE2F-120-SPX-COLTX	120	(1) 40W LED 4,000° K	CANOPY/BRIDGE FIXTURE, PENDANT HUNG W/B.O.F. @9FT-6IN AFG. ALUMINUM HOUSING, SEALED TEMPERED GLASS LENS
A1	LUMEC DOS-40W30LED4K-LE2F-120-DBB-1A POLE:SM63V-10-G-COLTX	120	(1) 40W LED 4,000° K	PLATFORM FIXTURE, POLE MOUNTED W/B.O.F. @10FT AFG. ALUMINUM HOUSING, SEALED TEMPERED GLASS LENS.
A3	LUMEC DOS-40W30LED4K-LE2F-120-DBB-M-COLTX	120	(1) 40W LED 4,000° K	STAIR FIXTURE, WALL MOUNTED W/B.O.F. ALUMINUM HOUSING, SEALED TEMPERED GLASS LENS
C1	LUMEC DMS50-90W49LED4K-LE4F-120-BM-1A POLE: SSM8V-20-COLTX	120	(1) 90W LED 4,000° K	PARKING LOT FIXTURE, POLE MOUNTED W/B.O.F. @20FT AFG. ALUMINUM HOUSING, SEALED TEMPERED GLASS LENS.
D	LUMINIS ECLIPSE W780-M150-WHT-STM	120	(1) 150W MH	ELEVATOR LOBBY LIGHT, PENDANT MOUNTED. NON-CORROSIVE ALUMINUM HOUSING. WHITE TRANSLUCENT ACRYLIC DIFFUSER , HIGH IMPACT.
F	PHILLIPS GARDCO 121 LED SCONCE 121-CWL-FT-50LA-CW-UNIV-WS	120	(1) 50W LED	WALL MOUNTED SCONCE LIGHT. INTEGRAL LED ARRAY, FULL CUTOFF IN DIE CAST ALUMINUM ENCLOSURE, HOUSING WITH SLOPED SURFACE RIBS.
G	LITHIONIA LIGHTING OLVTWM	120	15W LED	WALL MOUNTED ELEVATOR PIT, CLOSET, & SHAFT LIGHTS
G1	LITHIONIA LIGHTING OLVTCM	120	15W LED	CEILING MOUNTED CUPOLA LIGHT
G2	PHILLIPS PROT. FLOUR. LW LOW PROFILE VAPORLUME LWAE117-UNV-LT	UNV	(1) 17wT8 (24")	WET LOCATION, 24" WALL MOUNTED (ABOVE DOOR) FLOURESCENT LIGHT, UNIVERSAL VOLTAGE, LOW TEMPERATURE START BALLAST
G4	PHILLIPS PROT. FLOUR. LW LOW PROFILE VAPORLUME LWAE132-UNV-LT	UNV	(1) 32wT8 (48")	WET LOCATION, 24" WALL MOUNTED (ABOVE DOOR) FLOURESCENT LIGHT, UNIVERSAL VOLTAGE, LOW TEMPERATURE START BALLAST
H	LUMINIS ECLIPSE W775C-L1W30-120V-DGT-WET	120	30W LED	CEILING MOUNTED ECLIPSE FOR BICYCLE SHELTER, WET LOCATION OPTION.
I	GARDCO 944-C-100MH-LV-WP	120	100 W MH	RECESSED STEPLIGHTING, MOUNTED IN WALL OF SITE STAIR, UL WET LOCATION RATED.
J	ANTIQUE STREET LAMPS MUNICH PENDANT EML17-FT-49LED350MA-3K-120V	120	100 W MH	PENDANT MOUNTED LIGHT ABOVE STATION ID SIGN. DARK BRONZE FINISH, TYPE R4 DISTRIBUTION POINTED FORWARD AT BUILDING ID SIGN.
K	ADVANTUS AIMABLE 360 OV1110-36PSX-LWW3300-38X23-SWF(SL)	120	LED	BIKE SHELTER ID SIGN UPLIGHT, STANDARD COLOR AS SELECTED BY ARCHITECT
X	PHILIPS CHLORIDE 60MLA-3RW	120	LED	UL LISTED WET LOCATION & TAMPER RESISTANT LED EXIT SIGN WHITE W/RED LETTERING.
X1	PHILIPS CHLORIDE 30VL-1/2-WR	120	LED	INTERIOR EXIT SIGN, HIGH-OUTPUT LED W/SELF-TESTING MODE. 120MIN BATTERY BACKUP.
AOR	MCPHILBEN 30VL-1P-12/27W-RW-ARA23	120	LED	AREA OF REFUGE SIGN, HIGH-OUTPUT LED W/SELF-TESTING MODE. 120MIN BATTERY BACKUP.

NOTES:

1. REFER TO THE ELECTRICAL SPECIFICATION FOR ADDITIONAL GENERAL REQUIREMENTS.
2. FIXTURES SHALL BE UL OR ETL LISTED.
3. MOUNTING HARDWARE SUCH AS HANGERS, BRACKETS, RAILS, YOKES, STEMS, CHAINS, ECT., SHALL BE PROVIDED AS NECESSARY TO MOUNT SPECIFIED FIXTURE.
4. REFER TO ARCHITECTURAL DRAWINGS AND REFLECTED CEILING PLANS FOR SPECIFIC DETAILS, ARRANGEMENT, MOUNTING HEIGHTS, CEILING CONSTRUCTION, ECT., COLORS AND FINISHES SHALL BE SELECTED BY THE ARCHITECT.
5. FIXTURES SHALL BE SEISMICALLY SUPPORTED AS REQUIRED BY THE APPLICABLE BUILDING CODE.

REV.	DATE	REVISION DESCRIPTION	SHEET NO.

Filename: FD_MSH_ELE_0027_0059_E-801.dgn

THE INFORMATION, INCLUDING ESTIMATED QUANTITIES OF WORK, SHOWN ON THESE SHEETS IS BASED ON LIMITED INVESTIGATIONS BY THE STATE AND IS IN NO WAY WARRANTED TO INDICATE THE CONDITIONS OF ACTUAL QUANTITIES OF WORK WHICH WILL BE REQUIRED.

Date Plotted: October 01, 2014

DESIGNER/DRAFTER: MZ
CHECKED BY: SS
SCALE AS NOTED

STATE OF CONNECTICUT
DEPARTMENT OF TRANSPORTATIO

ENGINEER: BAKER ENGINEERING
APPROVED BY:
DATE:

STATE OF CONNECTICUT NORTH DELEGACHI No. 19079 LICENSED PROFESSIONAL ENGINEER

PROJECT TITLE:
SHORE LINE EAST RAILROAD STATIONS

TOWN: CLINTON

DRAWING TITLE: ELECTRICAL SCEDULES

PROJECT NO. 310-0059
DRAWING NO. E-801
SHEET NO. 07.13

PANEL:	DP1 - SECTION A	MAIN:	175A MCB
PROJECT:	CLINTON STATION	V & PH:	208Y/120V 3PH 4W
PROJECT #:	29168.00	A.I.C.	22,000
LOCATION:	SOUTH PLATFORM	FEEDER:	
MOUNTING:	SURFACE		

NOTES:
EXISTING PANEL
NEW CIRCUITS TO BE ADDED

BREAKER #	A	P	DESCRIPTION	LOAD KVA	PHASE LOAD - KVA A	B	C	LOAD KVA	DESCRIPTION	BREAKER A	P	#
1	20	1	PLAT RECEPT		-				PLAT RECEPT	20	1	2
3	20	1	PLAT RECEPT			-			TAMS (CANOPY)	20	1	4
5	20	1	SCU				-		SCU HEATER	20	1	6
7	20	1	TAMS (PLATFORM)		-				DOOR HOLDER	20	1	8
9	20	1	SPACE			-			SPACE			10
11	20	1	SPARE	0.00			0.54	0.54	ELEV SHAFT & CLOSET RECP	20	1	12
13	30	2	ELEV MISC	2.00	9.20			7.20	ELEVATOR	60	3	14
15			"	2.00		9.20		7.20	"			16
17	20	1	BRIDGE RECEP	0.36			7.56	7.20	"			18
19	20	1	ELEV LIGHTING	0.45	1.45			1.00	EXIT/AOR LTG	20	1	20
21	20	1	FACP	1.00		2.00		1.00	BLUE LIGHT/AOR PH	20	1	22
23	30	2	UPS	2.50			2.65	0.15	ELEV PIT LIGHT	20	1	24
25			"	2.50	2.50			-	SPARE	20	1	26
27	30	1	SECURITY	2.0		3.35		1.35	MAINT CLOSET LT & MOTOR	20	1	28
29			SPACE	-			1.30	1.30	EF-1	20	1	30
31			SPACE	-	-			-	SPARE	20	1	32
33			SPACE	-		-		-	SPACE			34
35			SPACE	-			-	-	SPACE			36
37			SPACE	-	-			-	SPACE			38
39			SPACE	-		-		-	SPACE			40
41			SPACE	-			-	-	SPACE			42
NEW LOAD PER PHASE:					13.15	14.55	12.05					
NEW LOAD ON PANEL:					39.75		KVA					

ELEMENTS WITHIN THIS AREA ARE EXISTING TO REMAIN UNLESS NOTED OTHERWISE.

CIRCUITS WITHIN SHADED AREA ARE EXISTING TO REMOVE

ELEMENTS WITHIN THIS AREA ARE EXISTING TO REMAIN UNLESS NOTED OTHERWISE.

PANEL:	DP1 - SECTION B	MAIN:	175A MCB
PROJECT:	CLINTON STATION	V & PH:	208Y/120V 3PH 4W
PROJECT #:	29168.00	A.I.C.	22,000
LOCATION:	SOUTH PLATFORM	FEEDER:	
MOUNTING:	SURFACE		

NOTES:
(CONTACTOR CONTROLLED)
EXISTING PANEL
NEW CIRCUITS TO BE ADDED

BREAKER #	A	P	DESCRIPTION	LOAD KVA	PHASE LOAD - KVA A	B	C	LOAD KVA	DESCRIPTION	BREAKER A	P	#
1	20	1	SIGN & CUPOLA LTG						PLATFORM/CANOPY LTG	20	1	2
3	20	1	PLATFORM/CANOPY LTG			-			PLATFORM/CANOPY LTG	20	1	4
5	20	1	ELEV/OVERPASS LTG				-		ELEV/OVERPASS LTG	20	1	6
7	20	1	ELEV/OVERPASS LTG		-				SHELTER/RAMP LTG	20	1	8
9	20	1	SHELTER/RAMP LTG			-			SHELTER/RAMP LTG	20	1	10
11	20	1	SHELTER/RAMP LTG				-		SPACE			12
13	35	1	PARKING/WALWAY LTG						PARKING/WALWAY LTG	30	1	14
15	35	1	PARKING/WALWAY LTG			-			PARKING/WALWAY LTG	30	1	16
17	35	1	PARKING/WALWAY LTG				-		PARKING/WALWAY LTG	30	1	18
19	20	1	LTG CONTACTOR		0.28			0.28	NORTH PARKING LTG	20	1	20
21	20	1	NORTH PARKING LTG	0.18		0.36		0.18	NORTH PARKING LTG	20	1	22
23	20	1	NORTH STAIRS	0.05			0.10	0.05	BICYCLE SHELTER	20	1	24
25	20	1	SPARE	-	-			-	SPARE	20	1	26
27	20	1	SPARE	-		-		-	SPARE	20	1	28
29	20	1	SPARE	-			-	-	SPARE	20	1	30
31	20	1	SPARE	-	-			-	SPACE			32
33	20	1	SPARE	-		-		-	SPACE			34
35			SPACE	-			-	-	SPACE			36
37			SPACE	-	-			-	SPACE			38
39			SPACE	-		-		-	SPACE			40
41			SPACE	-			-	-	SPACE			42
NEW LOAD PER PHASE:					0.28	0.36	0.10					
NEW LOAD ON PANEL:					0.74		KVA					

PANEL:	DP2	MAIN:	175 MCB
PROJECT:	CLINTON STATION	V & PH:	208Y/120V 3PH 4W
PROJECT #:	29168.00	A.I.C.	22,000
LOCATION:	NORTH PLATFORM	FEEDER:	
MOUNTING:	SURFACE		

NOTES:

BREAKER #	A	P	DESCRIPTION	LOAD KVA	PHASE LOAD - KVA A	B	C	LOAD KVA	DESCRIPTION	BREAKER A	P	#
1	20	1	PLATFORM RECEP	0.90	1.08			0.18	STATION RECEP	20	1	2
3	20	1	ELEV SHAFT RECEP	0.54		2.54		2.00	ELEVATOR MISC	30	2	4
5	60	3	ELEVATOR	7.20			9.20	2.00	"			6
7			"	7.20	7.56			0.36	BRIDGE RECEP	20	1	8
9			"	7.20		7.90		0.70	TAMS PLATFORM	20	1	10
11	20	1	ELEV LIGHTING	0.45			1.15	0.70	TAMS CANOPY	20	1	12
13	20	1	EXIT/AOR LIGHTS	0.35	2.85			2.50	UPS	30	2	14
15	20	1	BLUE LIGHT/AOR PH	1.00		3.50		2.50	"			16
17	20	1	MAINT CLOSET LT & MOTOR	1.35			2.65	1.30	EF-2	20	1	18
19	20	1	BLUE LIGHT/AOR PH	1.00	1.15			0.15	ELEV PIT LIGHT	20	1	20
21			SPACE	-		-		-	SPACE			22
23			SPACE	-			-	-	SPACE			24
25			SPACE	-	-			-	SPACE			26
27			SPACE	-		-		-	SPACE			28
29			SPACE	-			-	-	SPACE			30
TOTAL LOAD PER PHASE:					12.64	13.94	13.0					
TOTAL LOAD ON PANEL:					39.58		KVA					

PANEL:	ELP1	MAIN:	30A MCB
PROJECT:	CLINTON STATION	V & PH:	208/120V 1PH 3W
PROJECT #:	29168.00	A.I.C.	22,000
LOCATION:	SOUTH PLATFORM	FEEDER:	
MOUNTING:	SURFACE		

NOTES:
(CONTACTOR CONTROLLED PANEL)

LOCATE IN DPI ENCLOSURE

BREAKER #	A	P	DESCRIPTION	LOAD KVA	PHASE LOAD - KVA A	B	LOAD KVA	DESCRIPTION	BREAKER A	P	#
1	20	1	PLATFORM LTG	0.30	0.65		0.35	PLAT CANOPY LTG	20	1	2
3	20	1	STAIR LTG	0.50		0.75	0.25	STAIR LTG	20	1	4
5	20	1	BRIDGE LTG	0.35	0.73		0.38	UNDER PLAT LTG	20	1	6
7	20	1	SIGN	0.10		0.10	-	SPARE	20	1	8
9	20	1	SPARE	-	-		-	SPARE	20	1	10
11			SPARE	-		-	-	SPARE			12
TOTAL LOAD PER PHASE:					1.38	0.85					
TOTAL LOAD ON PANEL:					2.23						

PANEL:	ELP2	MAIN:	30A MCB
PROJECT:	CLINTON STATION	V & PH:	208/120V 1PH 3W
PROJECT #:	29168.00	A.I.C.	22,000
LOCATION:	NORTH PLATFORM	FEEDER:	
MOUNTING:	SURFACE		

NOTES:
(CONTACTOR CONTROLLED PANEL)

BREAKER #	A	P	DESCRIPTION	LOAD KVA	PHASE LOAD - KVA A	B	LOAD KVA	DESCRIPTION	BREAKER A	P	#
1	20	1	PLATFORM LTG	0.30	0.80		0.50	PLAT CANOPY LTG	20	1	2
3	20	1	STAIR LTG	0.50		0.75	0.25	STAIR LTG	20	1	4
5	20	1	SIGN	0.10	0.48		0.38	UNDER PLAT LTG	20	1	6
7	20	1	SITE	0.10		0.10	-	SPARE	20	1	8
9			SPACE	-	-		-	SPARE	20	1	10
11			SPACE	-		-	-	SPACE			12
13			SPACE	-	-		-	SPACE			14
15			SPACE	-		-	-	SPACE			16
17			SPACE	-	-		-	SPACE			18
19			SPACE	-		-	-	SPACE			20
TOTAL LOAD PER PHASE:					1.28	0.85					
TOTAL LOAD ON PANEL:					2.13						

REV.	DATE	REVISION DESCRIPTION	SHEET NO.

Filename: FD_MSH_ELE_0027_0059_E-802.dgn

THE INFORMATION, INCLUDING ESTIMATED QUANTITIES OF WORK, SHOWN ON THESE SHEETS IS BASED ON LIMITED INVESTIGATIONS BY THE STATE AND IS IN NO WAY WARRANTED TO INDICATE THE CONDITIONS OF ACTUAL QUANTITIES OF WORK WHICH WILL BE REQUIRED.

Date Plotted: October 01, 2014

DESIGNER/DRAFTER: MZ
CHECKED BY: SS
SCALE AS NOTED

STATE OF CONNECTICUT
DEPARTMENT OF TRANSPORTATIO

ENGINEER: BAKER ENGINEERING
APPROVED BY:
DATE:

STATE OF CONNECTICUT
NORTH DELEGATION
NO. 19079
LICENSED
PROFESSIONAL ENGINEER

PROJECT TITLE:
SHORE LINE EAST
RAILROAD STATIONS

TOWN: CLINTON

DRAWING TITLE:
ELECTRICAL
SCHEDULES

PROJECT NO. 310-0059
DRAWING NO. E-802
SHEET NO. 07.14

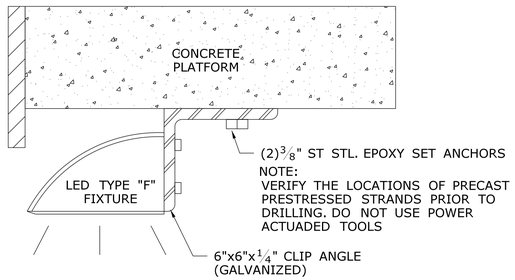

MOUNTING DETAIL - TYPE "F" FIXTURE (A / E-901)

SCALE: N.T.S.

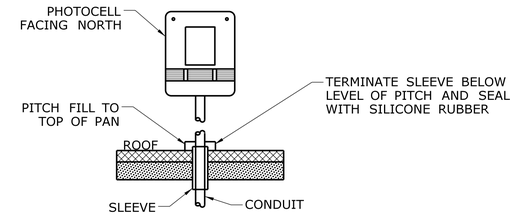

PHOTOCELL MOUNTING DETAIL (B / E-901)

SCALE: N.T.S.

REV.	DATE	REVISION DESCRIPTION	SHEET NO.

Filename: FD.MSH.ELE.0027.0059.E-901.dgn

THE INFORMATION, INCLUDING ESTIMATED QUANTITIES OF WORK, SHOWN ON THESE SHEETS IS BASED ON LIMITED INVESTIGATIONS BY THE STATE AND IS IN NO WAY WARRANTED TO INDICATE THE CONDITIONS OF ACTUAL QUANTITIES OF WORK WHICH WILL BE REQUIRED.

Date Plotted: October 01, 2014

DESIGNER/DRAFTER: RBMC

CHECKED BY: RBMC

SCALE AS NOTED

STATE OF CONNECTICUT
DEPARTMENT OF TRANSPORTATIO

ENGINEER: BAKER ENGINEERING

APPROVED BY:

DATE:

STATE OF CONNECTICUT NORTH DELEGATION NO. 19079 LICENSED PROFESSIONAL ENGINEER

PROJECT TITLE:

SHORE LINE EAST RAILROAD STATIONS

TOWN: **CLINTON**

DRAWING TITLE: **ELECTRICAL DETAILS**

PROJECT NO. **310-0059**

DRAWING NO. **E-901**

SHEET NO. **07.15**

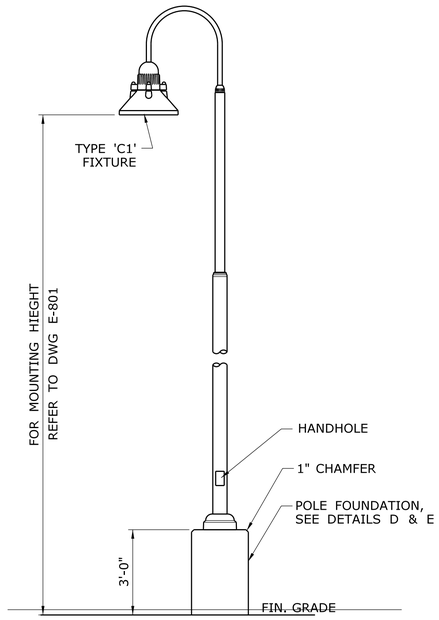

PARKING LOT LIGHT POLE — **A** / **E-902**

SCALE: N.T.S.

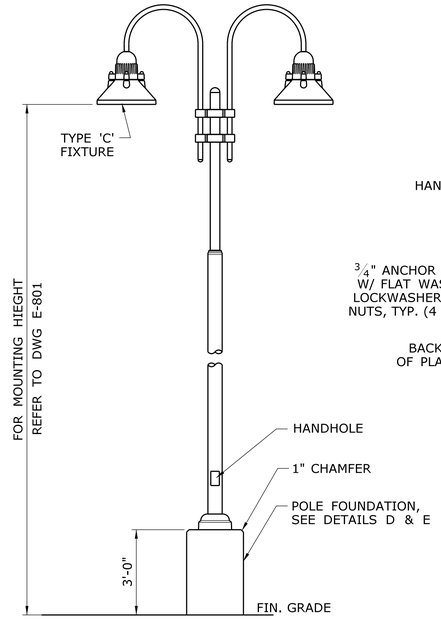

PARKING LOT LIGHT POLE — **B** / **E-902**

SCALE: N.T.S.

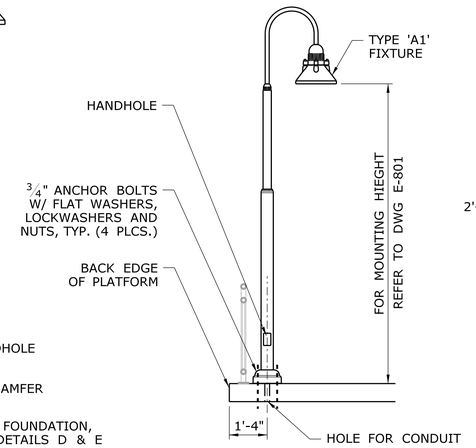

NOTE:
CONTRACTOR TO COORDINATE LOCATION OF LIGHT POLE ANCHOR BOLT HOLES AND HOLE FOR CONDUIT WITH PRE-CAST REINFORCING, TYP.

PLATFORM LIGHT POLE — **C** / **E-902**

SCALE: N.T.S.

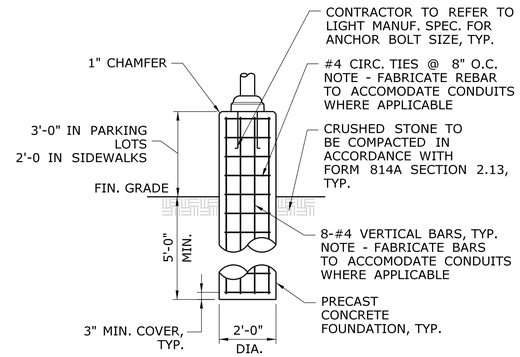

POLE FOUNDATION — **D** / **E-902**

SCALE: N.T.S.

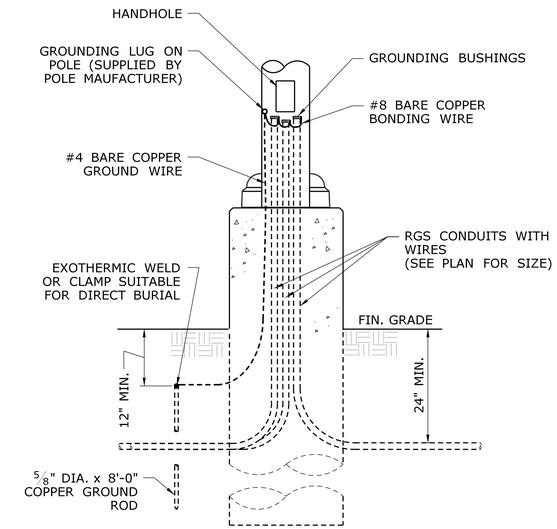

POLE WIRING & GROUNDING — **E** / **E-902**

SCALE: N.T.S.

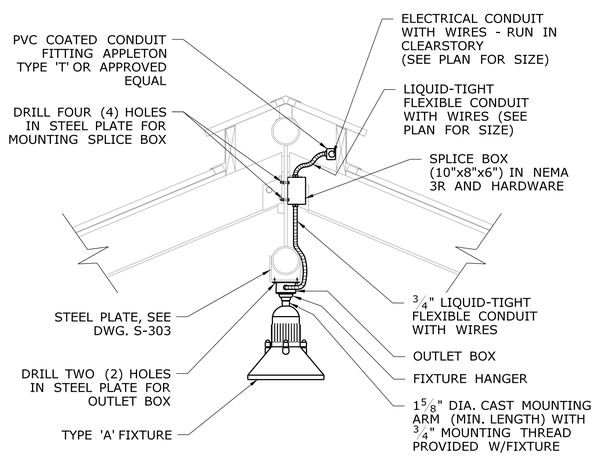

CANOPY LIGHT MOUNTING — **F** / **E-902**

SCALE: N.T.S.

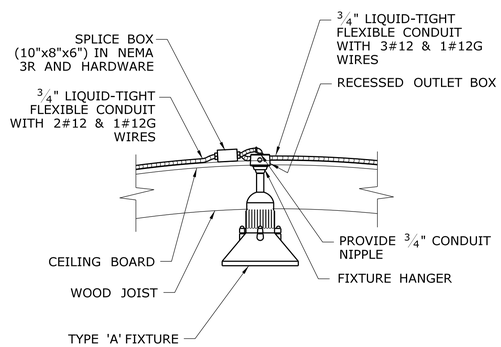

SHELTER LIGHT MOUNTING — **G** / **E-902**

SCALE: N.T.S.

NOTE: WARNING TAPE SHALL BE CONTINUOUS "RED" TAPE PRINTED TO READ AS FOLLOWS

BURIED ELECTRIC CABLES BELOW
- 208/120 VOLT FEEDERS -

(FOR LOW VOLTAGE DUCTBANKS PROPER VOLTAGE SHALL BE INDICATED)
WITH WARNING MESH BELOW WARNING TAPE (LINE MARKER)

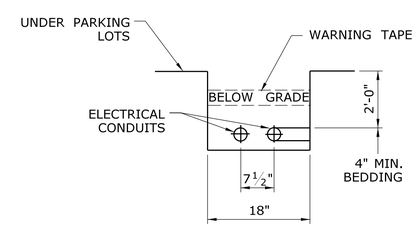

TRENCH DETAIL — **H** / **E-902**

SCALE: N.T.S.

REV.	DATE	REVISION DESCRIPTION	SHEET NO.

Filename: FD_MSH_ELE_0027_0059_E-902.dgn

THE INFORMATION, INCLUDING ESTIMATED QUANTITIES OF WORK, SHOWN ON THESE SHEETS IS BASED ON LIMITED INVESTIGATIONS BY THE STATE AND IS IN NO WAY WARRANTED TO INDICATE THE CONDITIONS OF ACTUAL QUANTITIES OF WORK WHICH WILL BE REQUIRED.

Date Plotted: October 01, 2014

DESIGNER/DRAFTER: RBMC
CHECKED BY: RBMC
SCALE AS NOTED

STATE OF CONNECTICUT
DEPARTMENT OF TRANSPORTATIO

ENGINEER: BAKER ENGINEERING
APPROVED BY:
DATE:

PROJECT TITLE: SHORE LINE EAST RAILROAD STATIONS

TOWN: CLINTON

DRAWING TITLE: ELECTRICAL DETAILS

PROJECT NO. 310-0059
DRAWING NO. E-902
SHEET NO. 07.16

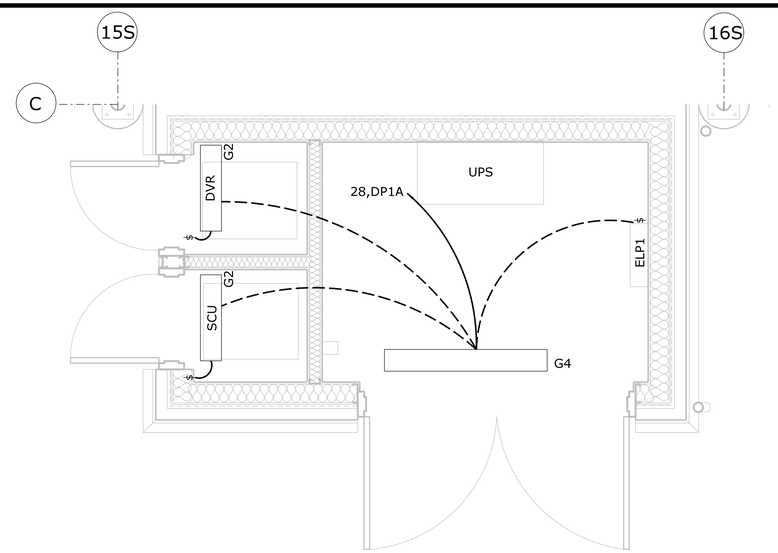

SOUTH CLOSET LIGHTING PLAN — **A / E-903**

SCALE: 1/2"=1'-0"

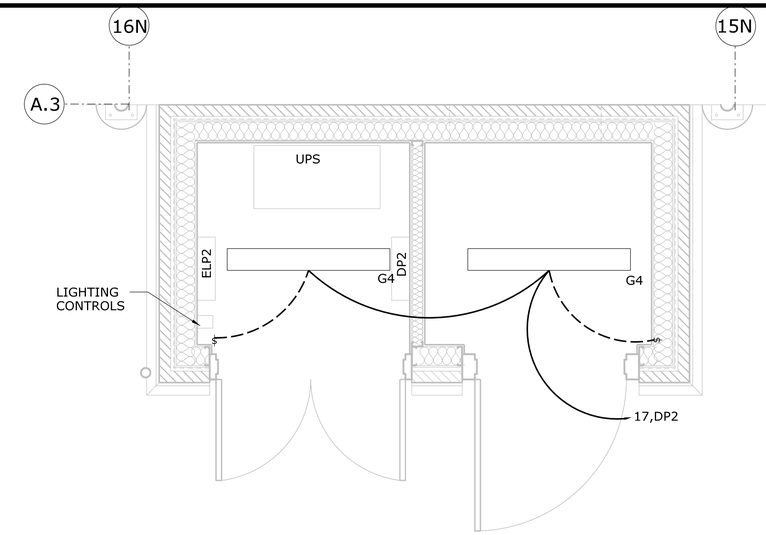

NORTH CLOSET LIGHTING PLAN — **B / E-903**

SCALE: 1/2"=1'-0"

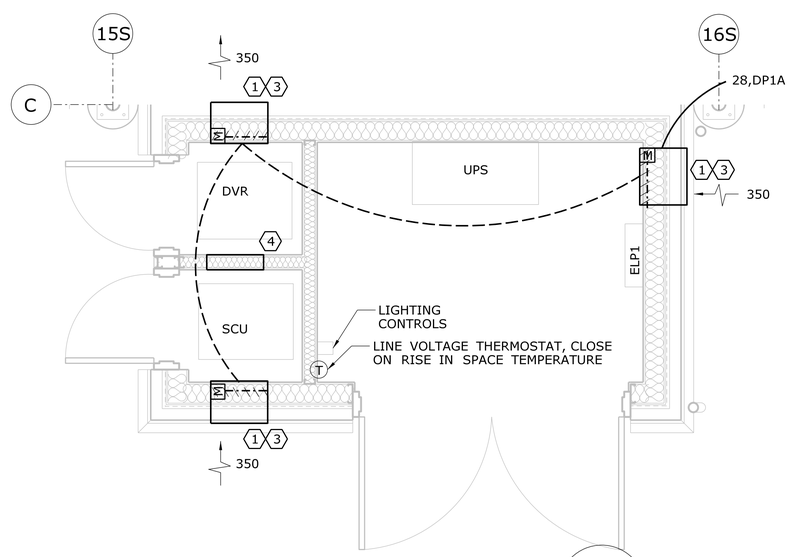

SOUTH CLOSET MECH. PLAN — **C / E-903**

SCALE: 1/2"=1'-0"

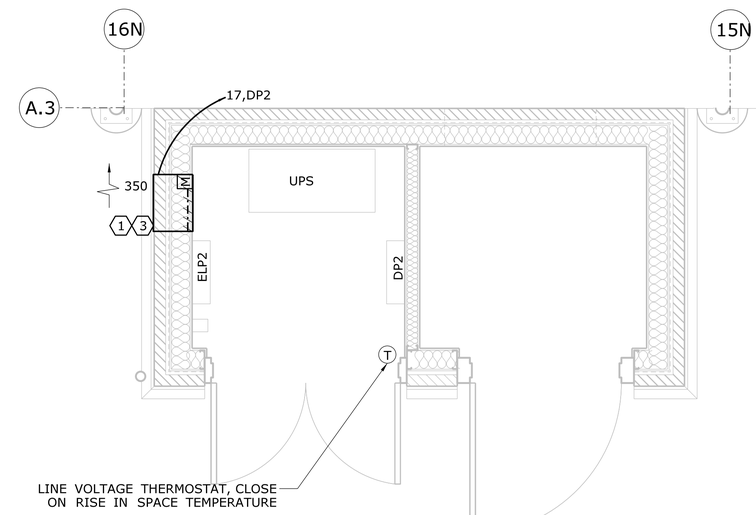

NORTH CLOSET MECH. PLAN — **D / E-903**

SCALE: 1/2"=1'-0"

MECHANICAL KEYNOTES

1. EXTRUDED ALUMINUM LOUVER, 4" DEEP, STATIONARY BLADE, DRAINABLE, 37° PITCH, 18" WIDE x 24" TALL, WITH 120 VOLT MOTOR OPERATED PARALLEL BLADE DAMPER, SPRING CLOSE, MOUNTED IN GALVANIZED SLEEVE.
2. BOTTOM OF LOUVER MOUNTED AT WATER TABLE HEIGHT
3. BOTTOM OF LOUVER MOUNTED AT 7'-6" ABOVE FINISHED FLOOR
4. 18"x36" STEEL GRILLE, 35° ANGLED BLADES, 3/4" SPACING, BOTH SIDES MOUNTED IN GALVANIZED SLEEVE

GENERAL NOTES

1. LOUVER FINISH, BAKED ON ENAMEL, COLOR BY ARCHITECT

REV.	DATE	REVISION DESCRIPTION	SHEET NO.

Filename: FD_MSH_ELE_0027_0059_E-903.dgn

THE INFORMATION, INCLUDING ESTIMATED QUANTITIES OF WORK, SHOWN ON THESE SHEETS IS BASED ON LIMITED INVESTIGATIONS BY THE STATE AND IS IN NO WAY WARRANTED TO INDICATE THE CONDITIONS OF ACTUAL QUANTITIES OF WORK WHICH WILL BE REQUIRED.

Date Plotted: October 01, 2014

DESIGNER/DRAFTER: ALD

CHECKED BY: SS

SCALE AS NOTED

STATE OF CONNECTICUT
DEPARTMENT OF TRANSPORTATIO

ENGINEER: BAKER ENGINEERING

APPROVED BY:

DATE:

STATE OF CONNECTICUT DEPARTMENT OF TRANSPORTATION JAL-19979 LICENSED PROFESSIONAL ENGINEER

PROJECT TITLE:

SHORE LINE EAST RAILROAD STATIONS

TOWN: **CLINTON**

DRAWING TITLE: **ELECTRICAL DETAILS**

PROJECT NO. **310-0059**

DRAWING NO. **E-903**

SHEET NO. **07.17**

08 - ET

INDEX OF DRAWINGS

DRAWING NUMBER	DRAWING TITLE	DRAWING NUMBER	DRAWING TITLE
ETI-001	DRAWING INDEX		
ET-20	PLATFORM GROUNDING AND BONDING PLAN		
ET-21	GROUNDING & BONDING PLATFORM SECTIONS		
ET-22	GROUNDING & BONDING DETAILS		
ET-23	GROUNDING & BONDING BILL OF MATERIALS		

DESIGNED BY:

Baker

MICHAEL BAKER
ENGINEERING, INC.
500 ENTERPRISE DRIVE
SUITE 2B
ROCKY HILL, CT 06067

REV.	DATE	REVISION DESCRIPTION	SHEET NO.
-	-	-	-
-	-	-	-
-	-	-	-
-	-	-	-
-	-	-	-
-	-	-	-

THE INFORMATION, INCLUDING ESTIMATED QUANTITIES OF WORK, SHOWN ON THESE SHEETS IS BASED ON LIMITED INVESTIGATIONS BY THE STATE AND IS IN NO WAY WARRANTED TO INDICATE THE CONDITIONS OF ACTUAL QUANTITIES OF WORK WHICH WILL BE REQUIRED.

Plotted Date: $DATE$

DESIGNER/DRAFTER: A.DEVAUX

CHECKED BY: D.TUDRYN

STATE OF CONNECTICUT
DEPARTMENT OF TRANSPORTATION

Filename: $FILEA$

SIGNATURE/ BLOCK:

Baker
Michael Baker Engineering Inc.
500 Enterprise Drive
Suite 2B
Rocky Hill, CT 06067

PROJECT TITLE:

SHORELINE EAST
RAILROAD STATIONS

TOWN: CLINTON

DRAWING TITLE: INDEX OF DRAWINGS

PROJECT NO. 310-0059

DRAWING NO. ETI-001

SHEET NO. 08.01

Border Version: 11/14/08

Connecticut Department of Transportation
QA/QC Format Check

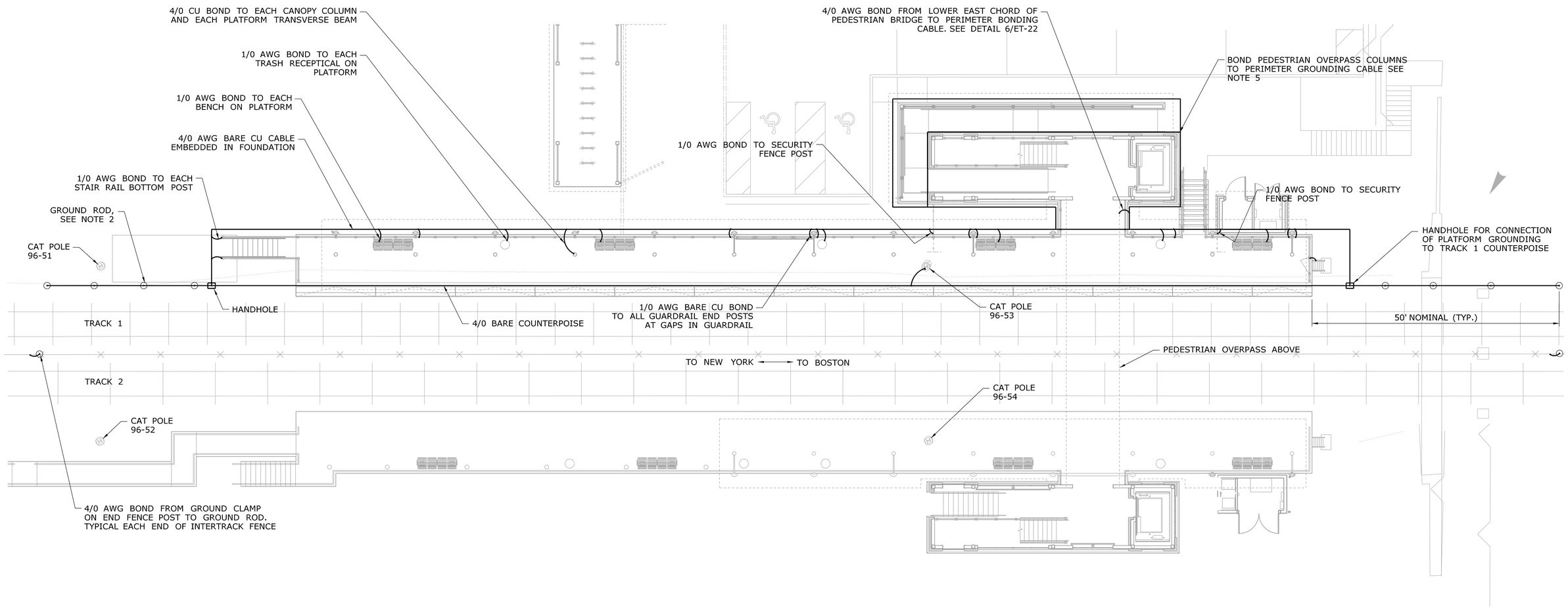

N

PLATFORM BONDING AND GROUNDING PLAN

SCALE: N.T.S.

A
ET-20

NOTES:

1. CONTRACTOR TO FURNISH 4/0 AWG BARE COPPER CONDUCTOR AND PREPARE TRENCH FOR THE INSTALLATION OF COUNTERPOISE ON FIELD SIDE OF TRACK 1 AS SHOWN (FINAL INSTALLATION OF COUNTERPOISE AND GROUND RODS BY AMTRAK).
2. INSTALL (4)$^{3}/_{4}$" DIA. 10FT COPPER CLAD STEEL GROUND RODS AT 10FT INTERVALS FROM COUNTERPOISE HANDHOLE TOWARDS THE END OF COUNERPOISE.
3. POLYMER CONCRETE HANDHOLE APPROX. 5FT BEYOND END OF PLATFORM, TOP FLUSH WITH FINISHED GRADE. EXACT LOCATION TO BE DETERMINED BY CONTRACTOR BASED ON FIELD CONDITIONS. CONNECT STATION PLATFORM 4/0 AWG CU GROUNDING CONDUCTOR TO HANDHOLE GROUND BAR.
4. THERMITE WELD BURIED CONNECTIONS TO BE COATED IN ACCORDANCE WITH MANUFACTURERS INSTRUCTIONS.
5. INSTALL 1/0 AWG CU BONDING CABLES FROM THE BARE 4/0 AWG CU PERIMETER GROUNDING CABLE TO EACH OF THE 10 PEDESTRIAN OVERPASS SUPPORT COLUMNS. BOND TWO ANCHOR BOLTS PER COLUMN WITH ERICO TYPE GT (OR EQUAL) ANCHOR BOLT EXOTHERMIC WELD CONNECTION.
6. FOR ADDITIONAL PLATFORM GROUNDING CONNECTIONS SEE DWG. ET-21.

REV.	DATE	REVISION DESCRIPTION	SHEET NO.

Filename: FD_MSH_ELE_0027_0059_ET-20.dgn

THE INFORMATION, INCLUDING ESTIMATED QUANTITIES OF WORK, SHOWN ON THESE SHEETS IS BASED ON LIMITED INVESTIGATIONS BY THE STATE AND IS IN NO WAY WARRANTED TO INDICATE THE CONDITIONS OF ACTUAL QUANTITIES OF WORK WHICH WILL BE REQUIRED.

Date Plotted: October 01, 2014

DESIGNER/DRAFTER: D. Tudryn / R. Wright
CHECKED BY: D. TUDRYN
SCALE AS NOTED

STATE OF CONNECTICUT
DEPARTMENT OF TRANSPORTATION

ENGINEER: BAKER ENGINEERING
APPROVED BY:
DATE:

PROJECT TITLE:
SHORE LINE EAST RAILROAD STATIONS

TOWN: CLINTON

DRAWING TITLE: PLATFORM GROUNDING AND BONDING PLAN

PROJECT NO. 310-0059
DRAWING NO. ET-20
SHEET NO. 08.02

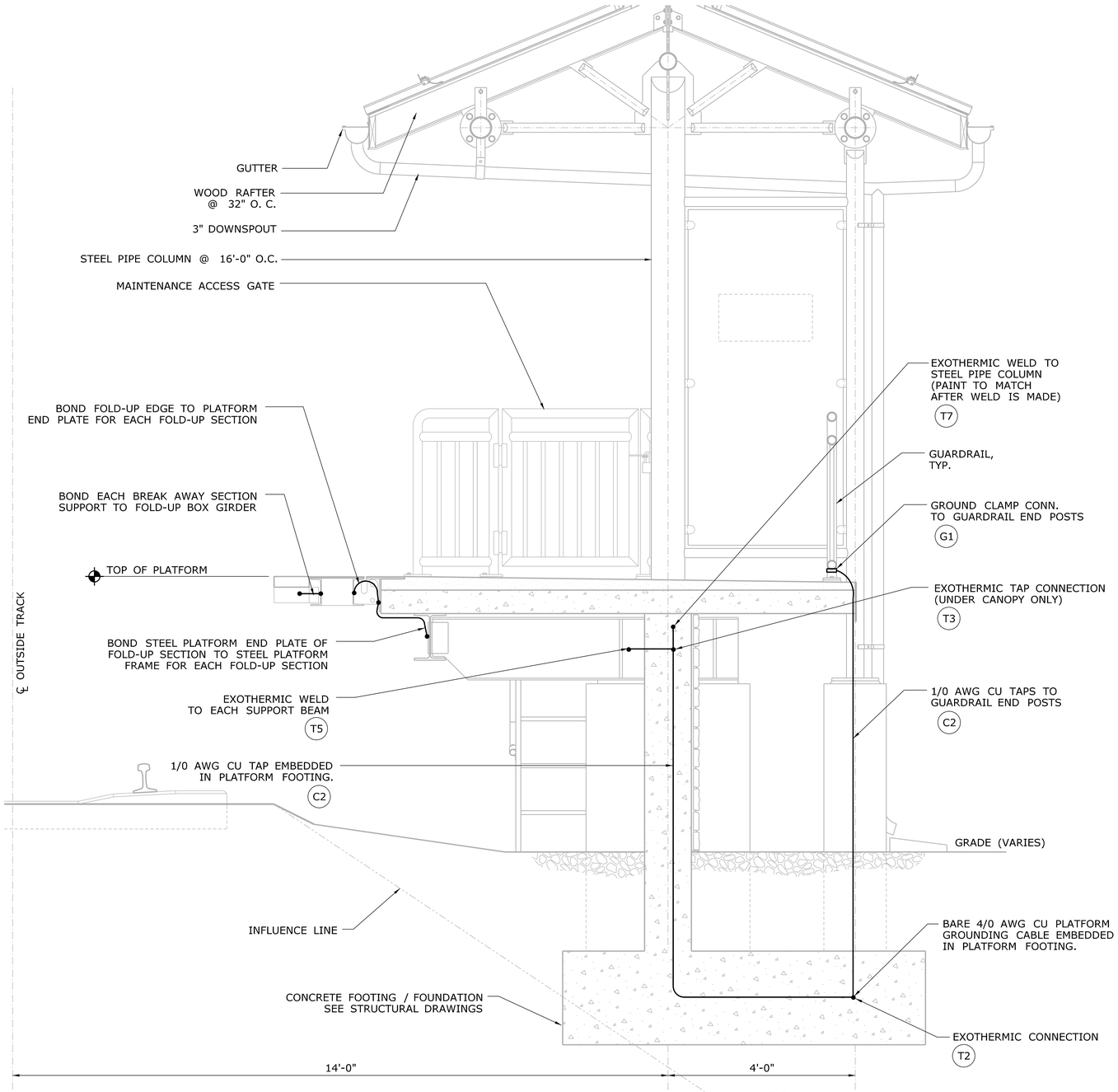

TYPICAL CANOPY SECTION — A / ET-21

SCALE: 3/4"=1'-0"

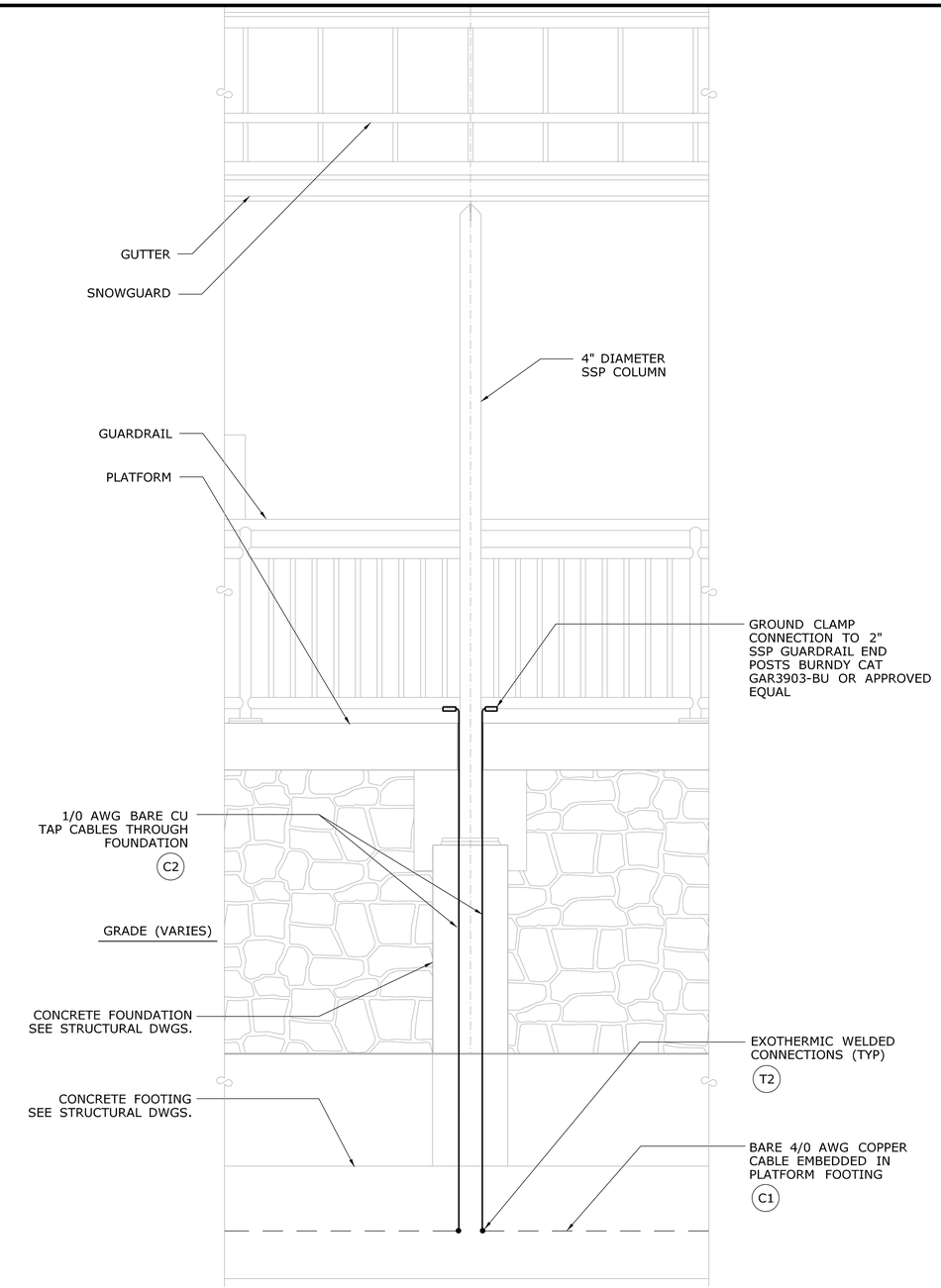

TYPICAL CANOPY ELEVATION — B / ET-21

SCALE: 3/4"=1'-0"

NOTES:

1. FOR BILL OF MATERIALS, SEE DRAWING NO. ET-23.
2. FOR CONNECTION DETAILS, SEE DRAWING NO. ET-22.

REV.	DATE	REVISION DESCRIPTION	SHEET NO.

Filename: PDGMSH_ELE_0027_0059_ET-21.dgn

THE INFORMATION, INCLUDING ESTIMATED QUANTITIES OF WORK, SHOWN ON THESE SHEETS IS BASED ON LIMITED INVESTIGATIONS BY THE STATE AND IS IN NO WAY WARRANTED TO INDICATE THE CONDITIONS OF ACTUAL QUANTITIES OF WORK WHICH WILL BE REQUIRED.

Date Plotted: October 01, 2014

DESIGNER/DRAFTER: B. Fryer /-R. Wright

CHECKED BY: B. Fryer

SCALE AS NOTED

STATE OF CONNECTICUT
DEPARTMENT OF TRANSPORTATION

ENGINEER: BAKER ENGINEERING

APPROVED BY:

DATE:

PROJECT TITLE: SHORE LINE EAST RAILROAD STATIONS

TOWN: CLINTON

DRAWING TITLE: GROUNDING & BONDING PLATFORM SECTIONS

PROJECT NO. 310-0059

DRAWING NO. ET-21

SHEET NO. 08.03

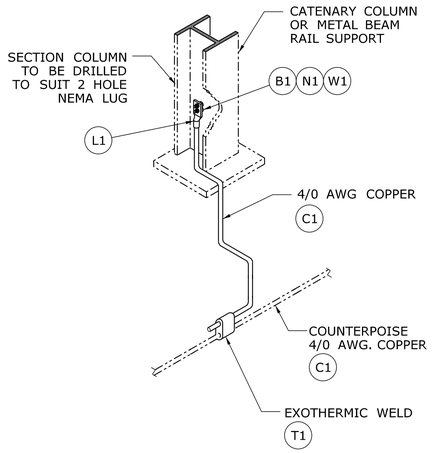

DETAIL 1
SCALE: N.T.S.
1 / ET-22

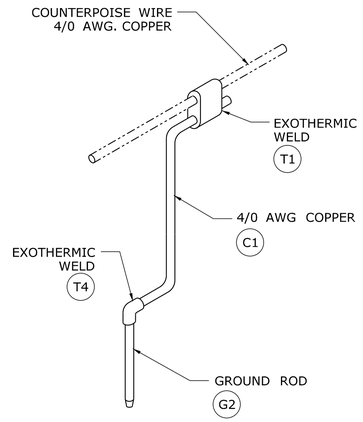

DETAIL 2:
COUNTERPOISE TO GROUND ROD

DETAIL 2
SCALE: N.T.S.
2 / ET-22

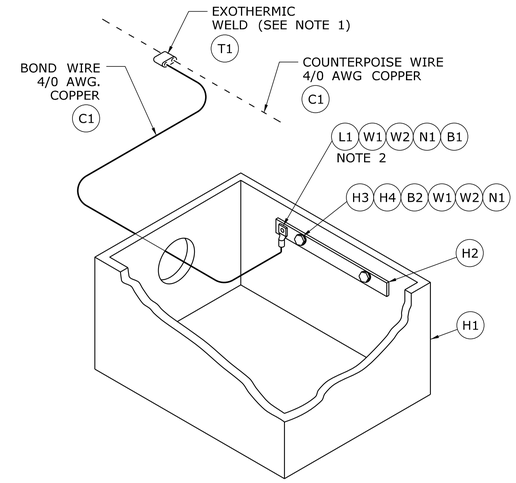

DETAIL 3:
COUNTERPOISE TO TRACKSIDE BUSBAR CONNECTION (CONNECTION TO PLATFORM GROUNDING SYSTEM NOT SHOWN).

DETAIL 3
SCALE: N.T.S.
3 / ET-22

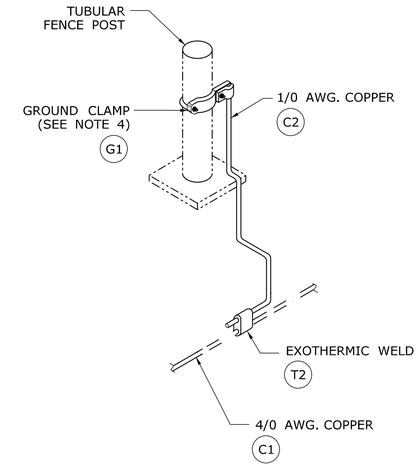

DETAIL 4:
FENCE POST TO COUNTERPOISE OR LIGHTING SUPPORT

DETAIL 4
SCALE: N.T.S.
4 / ET-22

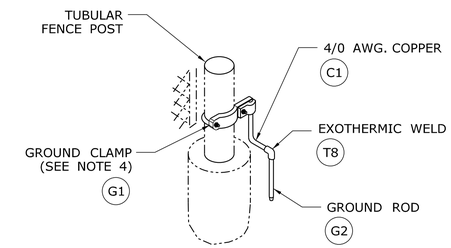

DETAIL 5:
FENCE POST TO GROUND ROD

DETAIL 5
SCALE: N.T.S.
5 / ET-22

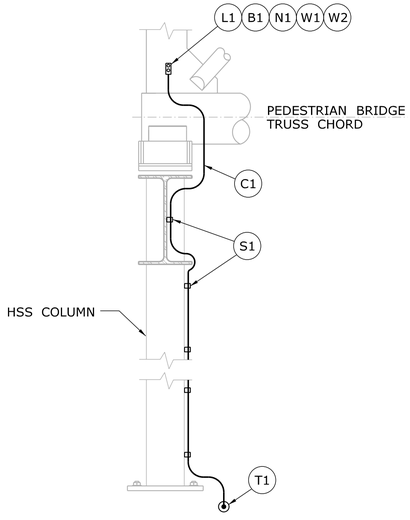

DETAIL 6:
PEDESTRIAN BRIDGE GROUNDING

DETAIL 6
SCALE: N.T.S.
6 / ET-22

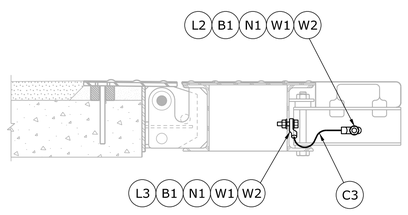

DETAIL 7:
BREAKAWAY SUPPORT TO FOLD-UP EDGE. (1) REQUIRED PER BREAKAWAY SUPPORT

DETAIL 7
SCALE: N.T.S.
7 / ET-22

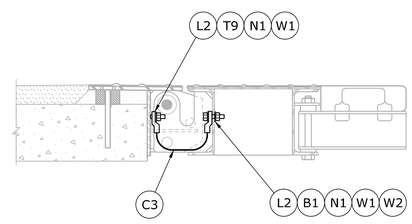

DETAIL 8:
FOLD-UP EDGE TO PLATFORM END PLATE

DETAIL 8
SCALE: N.T.S.
8 / ET-22

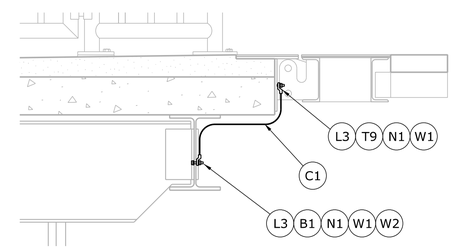

DETAIL 9:
FROM FOLD-UP EDGE TO PLATFORM STEEL FRAME

DETAIL 9
SCALE: N.T.S.
9 / ET-22

NOTES:

1. EXOTHERMIC WELD BURIED CONNECTIONS TO BE COATED IN ACCORDANCE WITH MANUFACTURERS INSTRUCTIONS.
2. CONNECTION FROM LUG ON ALL WIRE TO BUSBAR MUST BE PROPERLY GREASED TO CREATE A MOISTURE BARRIER.
3. SEE DRAWING NO. ET-23 FOR BILL OF MATERIAL
4. REMOVE PVC FENCE POST COATING IF PRESENT, UNDER ENTIRE GROUND CLAMP CONTACT AREA.

REV.	DATE	REVISION DESCRIPTION	SHEET NO.

Filename: FD_MSH_ELE_0027_0059_ET-22.dgn

THE INFORMATION, INCLUDING ESTIMATED QUANTITIES OF WORK, SHOWN ON THESE SHEETS IS BASED ON LIMITED INVESTIGATIONS BY THE STATE AND IS IN NO WAY WARRANTED TO INDICATE THE CONDITIONS OF ACTUAL QUANTITIES OF WORK WHICH WILL BE REQUIRED.

Date Plotted: October 01, 2014

DESIGNER/DRAFTER: B. Fryer / R. Wright
CHECKED BY: B. Fryer
SCALE AS NOTED

STATE OF CONNECTICUT
DEPARTMENT OF TRANSPORTATION

ENGINEER: BAKER ENGINEERING
APPROVED BY:
DATE:

PROJECT TITLE:
SHORE LINE EAST RAILROAD STATIONS

TOWN: CLINTON

DRAWING TITLE: GROUNDING & BONDING DETAILS

PROJECT NO. 310-0059
DRAWING NO. ET-22
SHEET NO. 08.04

BILL OF MATERIAL			
ITEM	DESCRIPTION	QUANTITY	UNIT
C1	CABLE, 4/0 AWG, BARE, SOFT-DRAWN COPPER, CLASS B STRANDING	1,760	FT
C2	CABLE, 1/0 AWG, BARE, SOFT-DRAWN COPPER, CLASS B STRANDING	1,160	FT
C3	CABLE, 4/0 AWG AL, 19 STRAND 1350-H19	638	FT
T1	EXOTHERMIC WELD, 4/0 CU CABLE TO 4/0 CABLE, PARALLEL	57	EA
T2	EXOTHERMIC WELD, 4/0 CU CABLE MAIN TO 1/0 TAP, PARALLEL	98	EA
T3	EXOTHERMIC WELD, 1/0 CU CABLE MAIN TO 1/0 TAP, PARALLEL	12	EA
T4	EXOTHERMIC WELD, 4/0 CU CABLE TO 3/4" GROUND ROD, TAP	12	EA
T5	EXOTHERMIC WELD, 1/0 CU CABLE TO FLAT (BEAM WEB)	40	EA
T6	EXOTHERMIC WELD, 1/0 CU CABLE TO 1" DIA ANCHOR BOLT	20	EA
T7	EXOTHERMIC WELD, 4/0 CU CABLE TO 8" DIAMETER STEEL COLUMN	18	EA
T8	EXOTHERMIC WELD, 1/0 CU CABLE TO $^{3}/_{4}$" GROUND ROD TAP	2	EA
T9	EXOTHERMIC WELD, $^{1}/_{2}$"-13 UNC STUD TO STEEL PLATE	26	EA
G1	GND. CONNECTOR, #4 TO 4/0 AWG, 1-1/4" TO 2" IPS PIPE, SWIVEL	93	EA
G2	GND. ROD, COPPER-CLAD STEEL, 3/4" DIAMETER, 10' LENGTH	12	EA
L1	LUG, 2-HOLE COMPRESSION FOR 4/0 COPPER CABLE, 1/2" BOLT HOLES	35	EA
L2	LUG, 1-HOLE COMPRESSION, AL FOR 4/0 AL WIRE AND $^{1}/_{2}$" BOLT	408	EA
L3	LUG, 1-HOLE COMPRESSION, CU FOR 4/0 CU WIRE AND 1/2" BOLT	26	EA
B1	BOLT, 1/2"-13 UNC, 2" LONG, SS, ALLOY 304, FULL THREAD	478	EA
B2	BOLT,*"-13 UNC, 3" LONG, SS, ALLOY 304, FULL THREAD	12	EA
N1	NUT, 1/2"-13 UNC, STAINLESS STEEL, RIGHT HAND THREAD	514	EA
W1	WASHER,*" STAINLESS STEEL, HELICAL SPRING LOCKING	514	EA
W2	WASHER, 1/2" STAINLESS STEEL, CIRCULAR PLAIN	488	EA
H1	HANDHOLE, POLYMER CONCRETE, 13" X 24" X 18" DEEP	2	EA
H2	GROUND BAR, FLAT COPPER,*"X4"X12" LONG	2	EA
H3	GROUND BAR WALL MOUNTING BRACKET, STAINLESS STEEL, 1"X6*" W/ 1" OFFSET	4	EA
H4	GROUND BAR STANDOFF INSULATOR, 2"X2" DIA,*" 13 UNC THREADS	4	EA
S1	WIRE CLAMP, INSULATED WITH SELF TAPPING SCREW, STAINLESS STEEL	12	EA

NOTES:

1. QUANTITIES SHOWN ARE APPROXIMATE ONLY. CONTRACTOR IS RESPONSIBLE FOR DETERMINING EXACT QUANTITIES.

REV.	DATE	REVISION DESCRIPTION	SHEET NO.

Filename: PDGMSH_ELE_0027_0059_ET-23.dgn

THE INFORMATION, INCLUDING ESTIMATED QUANTITIES OF WORK, SHOWN ON THESE SHEETS IS BASED ON LIMITED INVESTIGATIONS BY THE STATE AND IS IN NO WAY WARRANTED TO INDICATE THE CONDITIONS OF ACTUAL QUANTITIES OF WORK WHICH WILL BE REQUIRED.

Date Plotted: October 01, 2014

DESIGNER/DRAFTER: B. Fryer /-R. Wright

CHECKED BY: B. Fryer

SCALE AS NOTED

STATE OF CONNECTICUT
DEPARTMENT OF TRANSPORTATION

ENGINEER: BAKER ENGINEERING

APPROVED BY: DATE:

PROJECT TITLE: SHORE LINE EAST RAILROAD STATIONS

TOWN: CLINTON

DRAWING TITLE: GROUNDING & BONDING BILL OF MATERIALS

PROJECT NO. 310-0059

DRAWING NO. ET-23

SHEET NO. 08.05

09 - ENVIRONMENTAL
LIST OF DRAWINGS

DWG. NO.	DRAWING TITLE	SHEET NO.
ENV-001	LIST OF DRAWINGS	09.01
ENV-002	AREAS OF ENVIRONMENTAL CONCERN	09.02

DESIGNED BY:

TRC
21 GRIFFIN ROAD NORTH
WINDSOR, CT. 06095
860.298.9692

SIGN & CERTIFY
SHEETS No.
ENV-01 THRU ENV-02

REV.	DATE	REVISION DESCRIPTION	SHEET NO.

THE INFORMATION, INCLUDING ESTIMATED QUANTITIES OF WORK, SHOWN ON THESE SHEETS IS BASED ON LIMITED INVESTIGATIONS BY THE STATE AND IS IN NO WAY WARRANTED TO INDICATE THE CONDITIONS OF ACTUAL QUANTITIES OF WORK WHICH WILL BE REQUIRED.

Plotted Date: 9/26/2014

DESIGNER/DRAFTER: LB/KDH
CHECKED BY: CNS

STATE OF CONNECTICUT
DEPARTMENT OF TRANSPORTATION

Filename: ...\FD_MSH_GRD_0027_0059_ENV-001.dgn

SIGNATURE/ BLOCK:

TRC Environmental Corp.
21 Griffin Rd. North
Windsor, CT 06095

STATE OF CONNECTICUT
No. 13868
LICENSED
PROFESSIONAL ENGINEER

PROJECT TITLE:
SHORE LINE EAST
RAILRAOD STATIONS

TOWN: CLINTON

DRAWING TITLE: LIST OF DRAWINGS

PROJECT NO. 310-0059
DRAWING NO. ENV-001
SHEET NO. 09.01

J:\CADV\7370\0\0048\0008\0010\FD_MSH_GRD_0027_0059_ENV-001.dgn

Border Version: 11/19/09

Connecticut Department of Transportation
QA/QC Format Check

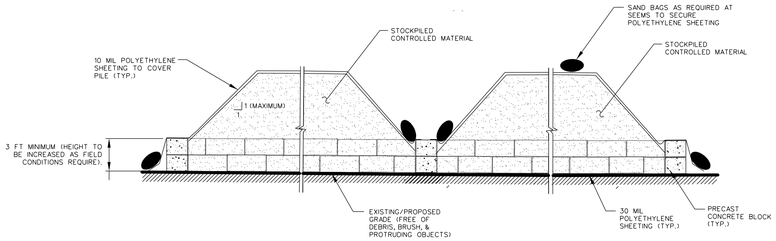

SECTION B-B

NOT TO SCALE

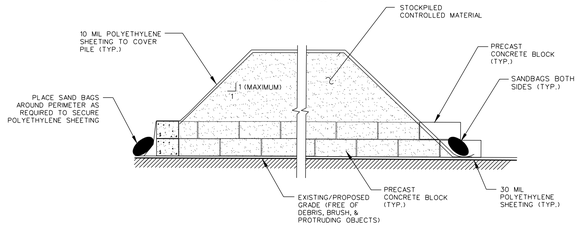

SECTION A-A

NOT TO SCALE

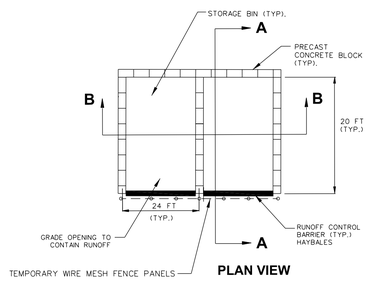

PLAN VIEW

WASTE STOCKPILE AREA

NOT TO SCALE

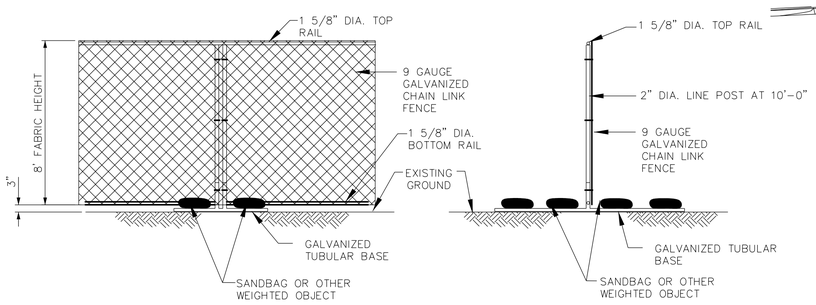

FRONT VIEW

SIDE VIEW

TEMPORARY WIRE MESH SECURITY FENCE DETAIL

NTS

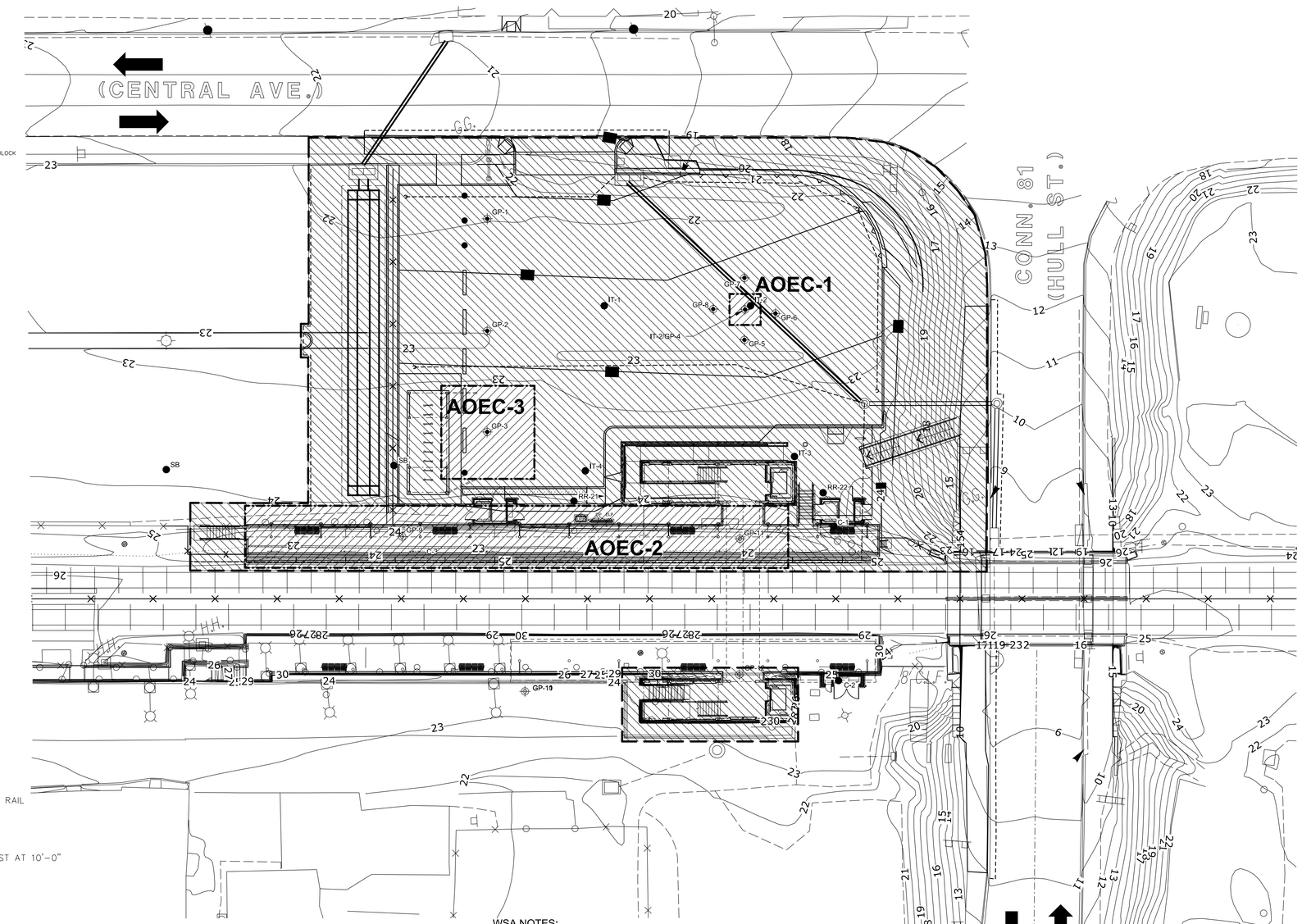

LEGEND:

- GEI SOIL BORING LOCATIONS
- SUPPLEMENTAL ENVIRONMENTAL SOIL BORING LOCATIONS
- ENVIRONMENTAL & GEOTECHNICAL SOIL BORING LOCATIONS
- LOW LEVEL AREA OF ENVIRONMENTAL CONCERN (LLAOEC)
- AREA OF ENVIRONMENTAL CONCERN (AOEC)

WSA NOTES:

1) THE TEMPORARY WASTE STOCKPILE AREA (WSA) TO BE LOCATED WITHIN THE PROJECT LIMITS. PLACEMENT AND DIMENSIONS OF THE WSA SHALL BE AT THE CONTRACTOR'S DISCRETION WITH THE ENGINEER'S APPROVAL. THE WSA WILL NEED TO BE RELOCATED AT LEAST ONCE TO ACCOMODATE THE SEQUENCING OF PROJECT ACTIVITIES.
2) THE CONTRACTOR SHALL INSTALL ALL EROSION AND SEDIMENTATION CONTROLS PER THE CONTRACT SPECIFICATIONS AND DRAWINGS.
3) PRIOR TO ASSEMBLING THE WSA, THE CONTRACTOR SHALL CLEAR THE PROPOSED AREAS OF ANY DEBRIS, VEGETATION AND ITEMS THAT MAY RESULT IN DAMAGE TO THE POLYETHYLENE SHEETING.
4) CONTRACTOR IS RESPONSIBLE FOR MAINTAINING THE WSA AS PER ITEM 0101117A-CONTROLLED MATERIAL HANDLING AND PREVENT UNAUTHORIZED ACCESS TO THE STORED MATERIAL.

REV.	DATE	REVISION DESCRIPTION	SHEET NO.
-	-	-	-
-	-	-	-
-	-	-	-
-	-	-	-
-	-	-	-
-	-	-	-

THE INFORMATION, INCLUDING ESTIMATED QUANTITIES OF WORK, SHOWN ON THESE SHEETS IS BASED ON LIMITED INVESTIGATIONS BY THE STATE AND IS IN NO WAY WARRANTED TO INDICATE THE CONDITIONS OF ACTUAL QUANTITIES OF WORK WHICH WILL BE REQUIRED.

Plotted Date: 9/9/2014

DESIGNER/DRAFTER: LB/KDH

CHECKED BY: CNS

SCALE IN FEET 0 20 40

SCALE 1"=20'

STATE OF CONNECTICUT
DEPARTMENT OF TRANSPORTATION

Filename: ...\FD_MSH_GRD_0027_0059_ENV-002.dgn

SIGNATURE/ BLOCK:

TRC Environmental Corp.
21 Griffin Rd. North
Windsor, CT 06095

STATE OF CONNECTICUT
CARLA M. STOPPER
No. 13256
LICENSED PROFESSIONAL ENGINEER

PROJECT TITLE: SHORE LINE EAST RAILROAD STATIONS

TOWN: CLINTON

DRAWING TITLE: AREAS OF ENVIRONMENTAL CONCERN

PROJECT NO. 310-0059

DRAWING NO. ENV-002

SHEET NO. 09.02

***ONLY STANDARD SHEETS MARKED WITH AN "✓" ARE IN THIS PROJECT #** 310-0059

****REVISED OR ADDED**

✓*	SHEET NO.	TITLE	APPROVAL DATE**
	HW-506_01	ENDWALLS, SLOPE PAVED INLETS AND OUTLETS	1-26-12
	HW-506_02	TYPE "D-G" & "L" ENDWALLS	7-13-12
	HW-506_03	ENDWALLS FOR PIPE ARCH	9-18-09
✓	HW-507_01	TYPE "C", "C-L" & DROP INLET CATCH BASIN	7-24-13
	HW-507_02	TYPE "C", "C-L" & DOUBLE GRATE TYPE - I	7-24-13
✓	HW-507_03	TYPE "C", "C-L" & DOUBLE GRATE TYPE - II	7-24-13
	HW-507_04	TYPE "C", "C-L" & ROUND PRECAST CONCRETE CB	11-10-11
	HW-507_05	TYPE "C" & "C-L" PRECAST CONCRETE CB DOUBLE GRATE TYPE - I	11-10-11
	HW-507_06	TYPE "C" & "C-L" PRECAST CONCRETE CB DOUBLE GRATE TYPE - II	11-10-11
✓	HW-507_07	TYPE "C" & "C-L" CATCH BASIN TOPS AND CURBS	11-10-11
✓	HW-507_08	CATCH BASIN FRAMES AND GRATES	9-18-09
	HW-507_09	HEAVY DUTY LOCK DOWN TOPS	7-12-12
✓	HW-507_10	MANHOLE - FRAME & COVER	7-24-13
	HW-601_01	FIGURES FOR DATES ON BRIDGE PARAPETS	6-09-11
	HW-651_01	C.C.M. PIPE INSTALLATIONS IN FILL & ROCK SLOPES & PIPE TRENCH DETAIL	7-24-13
	HW-651_02	SLOTTED DRAIN PIPE 12"- 15"-18"-24"-30" (305-381-457-610-762)	7-12-12
	HW-652_01	PIPE ENDS	7-24-13
✓	HW-751_01	UNDERDRAINS AND UNDERDRAIN OUTLETS	7-12-12
	HW-803_01	PAVED DITCH AND PAVED APRON	7-12-12
✓	HW-811_01	CURBING	7-12-12
	HW-813_01	GRANITE STONE TRANSITION CURBING	7-24-13
	HW-821_01a	TRANSITION 45" (1145) F-SHAPE TO 45" (1145) VERTICAL SHAPE SHEET 1	1-26-12
	HW-821_01b	TRANSITION 45" (1145) F-SHAPE TO 45" (1145) VERTICAL SHAPE SHEET 2	10-18-10
	HW-821_01c	TRANSITION 45" (1145) F-SHAPE TO 45" (1145) VERTICAL SHAPE SHEET 3	1-26-12
	HW-821_02a	45" (1145) F-SHAPE PRECAST CONCRETE BARRIER CURB SHEET 1	7-24-13
	HW-821_02b	45" (1145) F-SHAPE PRECAST CONCRETE BARRIER CURB SHEET 2	7-24-13
	HW-821_03a	TRANSITION - 32" (813) JERSEY SHAPE TO 45" (1145) VERTICAL SHAPE SHEET 1	1-26-12
	HW-821_03b	TRANSITION - 32" (813) JERSEY SHAPE TO 45" (1145) VERTICAL SHAPE SHEET 2	10-18-10
	HW-821_03c	TRANSITION - 32" (813) JERSEY SHAPE TO 45" (1145) VERTICAL SHAPE SHEET 3	10-18-10
	HW-821_03d	TRANSITION - 32" (813) JERSEY SHAPE TO 45" (1145) VERTICAL SHAPE SHEET 4	10-18-10
	HW-821_03e	TRANSITION - 32" (813) JERSEY SHAPE TO 45" (1145) F-SHAPE	7-24-13
	HW-821_04a	MERRITT PARKWAY NARROW MEDIAN BARRIER	6-09-11
	HW-821_04b	MERRITT PARKWAY - 2' (610) WIDE MEDIAN BARRIER AND ROADSIDE BARRIER	7-24-13

✓*	SHEET NO.	TITLE	APPROVAL DATE**
	HW-821_05a	TRANSITION - 45" (1145) F-SHAPE TO 54" (1372) VERTICAL SHAPE SHEET 1	1-26-12
	HW-821_05b	TRANSITION - 45" (1145) F-SHAPE TO 54" (1372) VERTICAL SHAPE SHEET 2	1-26-12
	HW-821_06	54" (1372) VERTICAL SHAPE BARRIER	2-6-12
	HW-821_07	MISCELLANEOUS DETAILS FOR BARRIER TRANSITIONS	7-12-12
	HW-822_01	TEMPORARY PRECAST CONCRETE BARRIER CURB	7-24-13
	HW-905_01	FENCES AND BARWAYS	7-13-12
✓	HW-910_01	W- BEAM METAL BEAM RAIL HARDWARE	6-09-11
✓	HW-910_02	METAL BEAM RAIL (TYPE R-B 350) GUIDERAIL	6-09-11
	HW-910_03	METAL BEAM RAIL (TYPE MD-B 350)	6-09-11
	HW-910_04	METAL BEAM RAIL (TYPE R-B 350) SYSTEMS 5, 5A, & 6	6-09-11
	HW-910_05	METAL BEAM RAIL R-B 350 SPAN TYPE I, II, III SECTIONS	7-24-13
✓	HW-910_06	R-B 350 BRIDGE ATTACHMENT SAFETY SHAPE PARAPET	6-09-11
✓	HW-910_07	R-B 350 BRIDGE ATTACHMENT VERTICAL SHAPE PARAPET	6-09-11
	HW-910_08	R-B 350 BRIDGE ATTACHMENT TRAILING END	6-09-11
	HW-910_09a	MISCELLANEOUS GUIDERAIL TRANSITIONS SHEET 1	1-26-12
	HW-910_09b	MISCELLANEOUS GUIDERAIL TRANSITIONS SHEET 2	7-25-12
	HW-910_10	METAL BEAM RAIL 8" (203) X 6" (152) BOX BEAM	7-24-13
	HW-910_11	CURVED GUIDERAIL TREATMENT DETAIL	7-25-12
	HW-910_12a	MERRITT PARKWAY GUIDERAIL ATTACHMENT - SYSTEM 2 & 3	7-24-13
	HW-910_12b	MERRITT PARKWAY GUIDERAIL	7-24-13
	HW-910_12c	MERRITT PARKWAY GUIDERAIL TRAILING END ATTACHMENTS	7-24-13
	HW-910_12d	MERRITT PARKWAY MEDIAN GUIDERAIL AND END ANCHOR	6-09-11
	HW-910_13a	THRIE-BEAM METAL BEAM RAIL HARDWARE	7-24-13
	HW-910_13b	THRIE-BEAM TRANSITIONS	7-24-13
	HW-910_14a	THRIE-BEAM 350 BRIDGE ATTACHMENT	6-09-11
	HW-910_14b	THRIE-BEAM 350 GUIDERAIL TRANSITION TO R-B 350 GUIDERAIL	6-09-11
	HW-910_15	MD-B 350 MEDIAN BARRIER SAFETY SHAPE ATTACHMENT TYPE I	6-09-11
	HW-910_16	MD-B 350 MEDIAN BARRIER SAFETY SHAPE ATTACHMENT TYPE II	6-09-11
	HW-910_17	R-B TERMINAL SECTION	7-24-13
	HW-910_18	METAL BEAM RAIL (TYPE MD-I)	10-18-10
	HW-910_19a	METAL BEAM RAIL (MODIFIED TYPE R-I) AND END ANCHORAGE TYPE I	7-24-13
	HW-910_19b	METAL BEAM RAIL (MODIFIED TYPE R-I) AND END ANCHORAGE TYPE II	7-24-13
	HW-910_19c	METAL BEAM RAIL (MODIFIED TYPE R-I) SYSTEMS 2 AND 3	7-24-13

REV.	DATE	REVISION DESCRIPTION
-	-	-
-	-	-
-	-	-
-	-	-
-	-	-
1	7-24-13	REVISED 23 SHEETS

THE INFORMATION, INCLUDING ESTIMATED QUANTITIES OF WORK, SHOWN ON THESE SHEETS IS BASED ON LIMITED INVESTIGATIONS BY THE STATE AND IS IN NO WAY WARRANTED TO INDICATE THE CONDITIONS OF ACTUAL QUANTITIES OF WORK WHICH WILL BE REQUIRED.

Plotted Date: 7/25/2013

NOT TO SCALE

STATE OF CONNECTICUT
DEPARTMENT OF TRANSPORTATION

Filename: CTDOT_HIGHWAY_STD2013.dgn Model: 1 - HW-INX_1

CTDOT STANDARD SHEET

OFFICE OF ENGINEERING

STANDARD SHEET TITLE:

HIGHWAY STANDARD SHEET INDEX

STANDARD SHEET NO.:

HW_INX

1 of 2

*ONLY STANDARD SHEETS MARKED WITH AN "✓" ARE IN THIS PROJECT #

**REVISED OR ADDED

✓*	SHEET NO.	TITLE	APPROVAL DATE**
✔	HW-911_01	R-B END ANCHORAGE TYPE I AND II	7-24-13
	HW-911_02	MD-B END ANCHORAGE TYPE I	10-18-10
	HW-911_03	ANCHOR IN EARTH CUT SLOPE & ANCHOR IN ROCK CUT SLOPE	10-18-10
	HW-911_04	TYPICAL GRADING PLAN FOR W-BEAM GUIDERAIL TURN-DOWN END ANCHOR	10-18-10
	HW-911_05	MERRITT PARKWAY GUIDERAIL END ANCHORS	7-24-13
	HW-913_01	CHAIN LINK FENCE	7-12-12
	HW-918_01a	THREE CABLE GUIDERAIL (I-BEAM POSTS) SHEET 1	7-24-13
	HW-918_01b	THREE CABLE GUIDERAIL (I-BEAM POSTS) SHEET 2	1-26-12
	HW-918_01c	THREE CABLE GUIDERAIL (I-BEAM POSTS) SHEET 3	7-24-13
✔	HW-921_01	DRIVEWAY RAMPS AND SIDEWALKS	1-26-12
	HW-925_01	PAVEMENT FOR RAILING	6-09-11
✔	HW-949_01	PLANTING DETAILS FOR TREES	7-12-12
✔	HW-949_02	PLANTING DETAILS FOR SHRUBS	7-12-12
	HW-1800_01	GRADING PLAN FOR TYPE B IMPACT ATTENUATION SYSTEM (FLARED)	6-20-11
	HW-1800_02	GRADING PLAN FOR TYPE B IMPACT ATTENUATION SYSTEM (MEDIAN/GORE)	6-09-11
	HW-1800_03	GRADING PLAN FOR TYPE B IMPACT ATTENUATION SYSTEM (TANGENTIAL)	6-20-11
	HW-1806_01a	CT TRUCK MOUNTED IMPACT ATTENUATOR SHEET 1	10-18-10
	HW-1806_01b	CT TRUCK MOUNTED IMPACT ATTENUATOR SHEET 2	10-18-10
	HW-1806_01c	CT TRUCK MOUNTED IMPACT ATTENUATOR SHEET 3	10-18-10

✓*	SHEET NO.	TITLE	APPROVAL DATE**

REV.	DATE	REVISION DESCRIPTION
-	-	-
-	-	-
-	-	-
-	-	-
-	-	-
1	7/24/13	REVISED 8 SHEETS

THE INFORMATION, INCLUDING ESTIMATED QUANTITIES OF WORK, SHOWN ON THESE SHEETS IS BASED ON LIMITED INVESTIGATIONS BY THE STATE AND IS IN NO WAY WARRANTED TO INDICATE THE CONDITIONS OF ACTUAL QUANTITIES OF WORK WHICH WILL BE REQUIRED.

Plotted Date: 8/29/2014

NOT TO SCALE

STATE OF CONNECTICUT
DEPARTMENT OF TRANSPORTATION

Filename: CTDOT_HIGHWAY_STD.dgn Model: 2 - HW-INX_2

CTDOT
STANDARD SHEET

OFFICE OF ENGINEERING

STANDARD SHEET TITLE:

HIGHWAY
STANDARD SHEET INDEX

STANDARD SHEET NO.:

HW_INX
2 of 2

H = TOTAL HEIGHT OF ENDWALL

B = BASE

D = INSIDE DIAMETER OF PIPE

S = HEIGHT OF SLOPE ABOVE FLOW LINE AT FACE OF WALL = D+2"(51) MIN.

L = LENGTH OF WALL = 3S+D

ALL EDGES OF EXPOSED SURFACES SHALL BE CHAMFERED APPROXIMATELY ONE INCH (25mm).

DIMENSIONS AND QUANTITIES FOR ONE WING TYPE ENDWALL											
D	B	C	G	H	K	L	P	Q	R	W	VOL
INS.(mm)	FT.&IN.(mm)	FT.&IN.(mm)	FT.&IN.(mm)	FT.&IN.(mm)	FT.&IN.(mm)	FT.&IN.(mm)	FT.&IN.(mm)	FT.&IN.(mm)	FT.&IN.(mm)	FT.&IN.(mm)	CU.YD.(m^3)
36"(914)	1'-6" (457)	2'-0"(610)	3'-3"(991)	6'-8"(2032)	9'-1 1/2"(2781)	7'-3 3/4"(2229)	1'-4 7/8"(430)	0'-9 3/4"(248)	3'-4 7/8"(1038)	5'-5 3/4"(1670)	5.87(4.5)
42"(1000)	1'-6" (457)	2'-0"(610)	3'-3"(991)	7'-2"(2184)	9'-10 1/2"(3010)	7'-9 3/4"(2381)	1'-6 3/8"(470)	0'-9 3/4"(248)	3'-10 1/2"(1181)	6'-7 3/4"(2026)	6.67(5.1)
48"(1200)	1'-7" (483)	2'-6"(762)	3'-9"(1143)	8'-2"(2489)	10'-10"(3302)	8'-3 3/4"(2534)	1'-9 3/8"(540)	0'-11 1/4"(286)	4'-9"(1448)	7'-9 1/2"(2375)	9.11(7.0)
60"(1500)	1'-7" (483)	2'-6"(762)	3'-9"(1143)	9'-2"(2794)	12'-4 1/2"(3772)	9'-3 3/4"(2838)	2'-0 3/8(620)	0'-11 1/4"(286)	5'-9"(1753)	10'-1 1/4"(3080)	12.43(9.5)
72"(1800)	1'-7" (483)	2'-6"(762)	3'-9"(1143)	10'-2"(3099)	13'-10 3/4"(4235)	10'-3 3/4(3143)	2'-3 3/8"(690)	0'-11 1/4"(286)	6'-9"(2057)	12'-5"(3785)	16.30(12.5)

GENERAL NOTES:

1. ALL CONSTRUCTION DIMENSIONS ARE NOMINAL. WHEN ONE ENDWALL IS USED FOR TWO PIPES, THE DIMENSIONS OF THE ENDWALL SHALL CONFORM TO THAT WHICH IS REQUIRED FOR THE LARGER PIPE, EXCEPT THE DIMENSION "L" SHALL BE INCREASED BY THE OUTSIDE DIAMETER OF THE SMALLER PIPE PLUS ONE FOOT.
2. THESE ENDWALLS SHALL ONLY BE USED AT LOCATIONS WHERE THEY ARE OUTSIDE THE DESIGN CLEAR ZONE.
3. COST OF REINFORCING BARS SHALL BE INCLUDED IN THE CONTRACT UNIT PRICE FOR CLASS "A" CONCRETE.
4. ALL REINFORCING BARS SHALL HAVE 3" (76) COVER MIN.

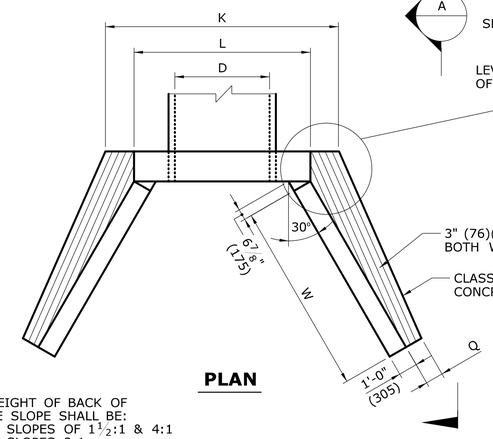

PLAN

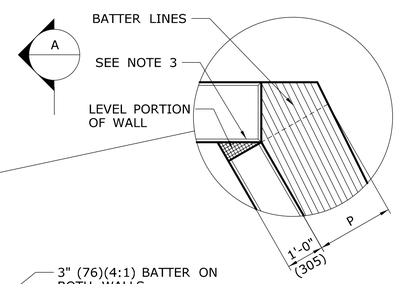

DETAIL 1

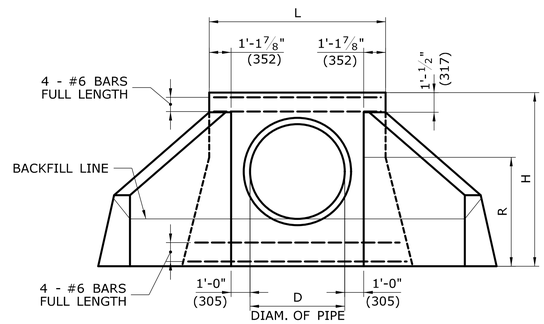

FRONT ELEVATION

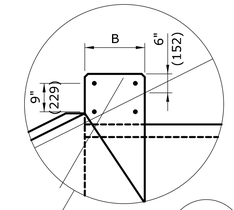

DETAIL 2

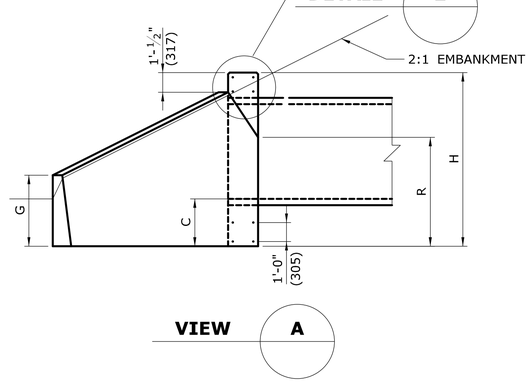

VIEW A

TABLE WITH QUANTITIES		
D	VOLUME OF FOOTING	SLOPE * PAVING
INS(mm)	C.Y.(m^3)	S.Y.(m^2)
15"(375-400)	0.26(0.20)	3.2(2.7)
18"(457)	0.30(0.23)	3.5(2.9)
24"(610)	0.37(0.28)	4.0(3.3)
30"(750-800)	0.37(0.34)	4.6(3.8)
36"(914)	1.55(1.2)	4.7(3.9)
42"(1000-1050)	1.69(1.3)	5.4(4.5)
48"(1200)	1.82(1.4)	6.1(5.1)
60"(1500-1600)	2.08(1.6)	7.6(6.4)
72"(1829)	2.34(1.8)	9.3(7.8)

* APPROXIMATE QUANTITY FOR MINIMUM CONDITION

STANDARD WING TYPE ENDWALL

REINFORCEMENT SHALL BE USED FOR 48" (1219) DIA. PIPE AND UP

EXPOSED HEIGHT OF BACK OF WALL ABOVE SLOPE SHALL BE:
7"(178) FOR SLOPES OF 1 1/2:1 & 4:1
9"(229) FOR SLOPES 2:1

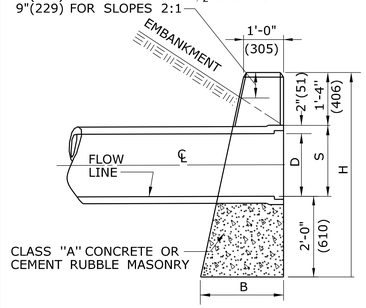

SECTION C

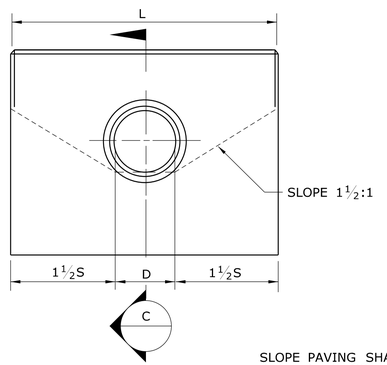

FRONT ELEVATION

STANDARD ENDWALL

DIMENSIONS AND QUANTITIES FOR ONE ENDWALL BASED ON S = D + 2" (51 mm)						
D	S	H	L	BATTER	B	VOL.
IN.(mm)	FT.& IN.(mm)	FT.& IN.(mm)	FT.& IN.(mm)	FT.& IN.(mm)	FT.& IN.(mm)	CU.YD.(m^3)
12"(305)	1'-2"(356)	4'-6"(1372)	4'-6"(1372)	2 1/2"(5:1)	1'-11 1/4"(590)	1.10(.8)
15"(381)	1'-5"(432)	4'-9"(1448)	5'-6"(1676)	2 1/2"(5:1)	1'-11 7/8"(606)	1.45(1.0)
18"(457)	1'-8"(508)	5'-0"(1524)	6'-6"(1981)	2 1/2"(5:1)	2'-0 1/2"(622)	1.83(1.4)
24"(610)	2'-2"(660)	5'-6"(1676)	8'-6"(2591)	2 1/2"(5:1)	2'-1 3/4"(654)	2.72(2.1)
30"(762)	2'-8"(813)	6'-0"(1829)	10'-6"(3200)	2 1/2"(5:1)	2'-3"(686)	3.79(2.7)
36"(914)	3'-2"(965)	6'-6"(1981)	12'-6"(3810)	3"(4:1)	2'-7 1/2"(790)	5.45(4.2)
42"(1067)	3'-8"(1118)	7'-0"(2134)	14'-6"(4420)	3"(4:1)	2'-9"(838)	6.40(4.9)*
48"(1219)	4'-2"(1270)	7'-6"(2286)	16'-6"(5029)	3"(4:1)	2'-10 1/2"(876)	8.00(6.1)*

* VOLUME IS BASED ON D MINUS WALL THICKNESS AT ℄ OF PIPE

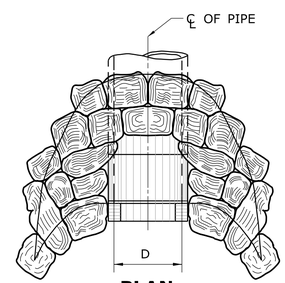

PLAN

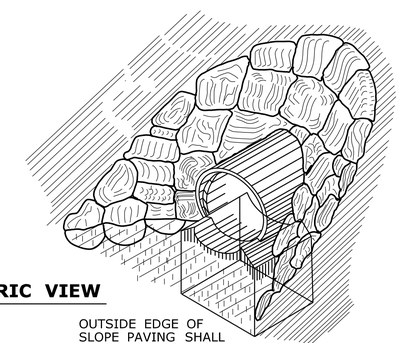

ISOMETRIC VIEW

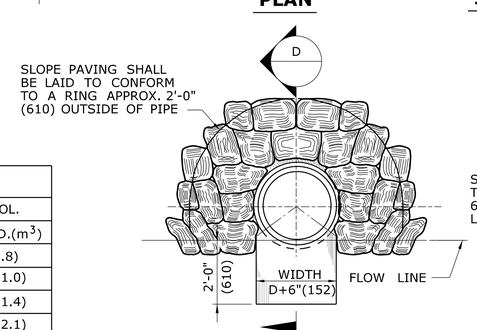

FRONT ELEVATION

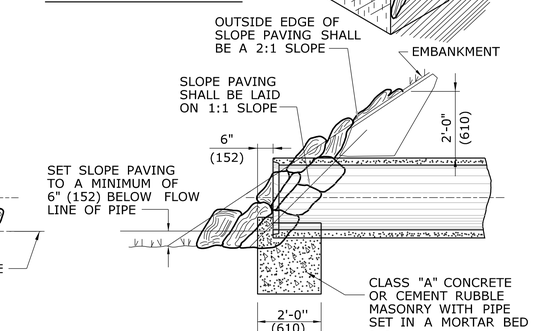

SECTION D

FOOTING & SLOPE PAVING FOR PIPES 15"(381) TO 30"(762) DIAMETER

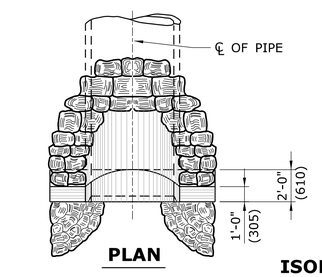

PLAN

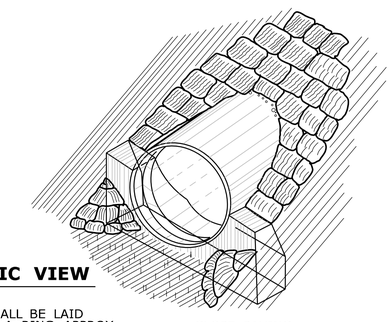

ISOMETRIC VIEW

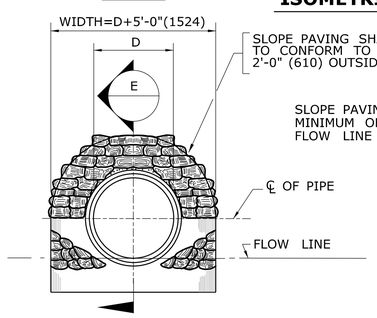

FRONT ELEVATION

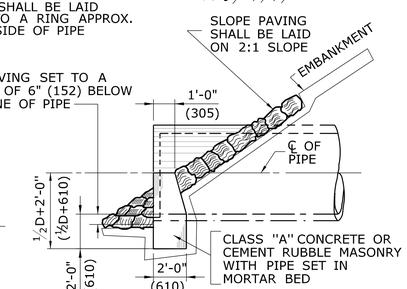

SECTION E

FOOTING & SLOPE PAVING FOR PIPES 36"(914) TO 72"(1829) DIAMETER

ALL METRIC DIMENSIONS ARE IN MILLIMETERS (mm) UNLESS OTHERWISE NOTED

REV.	DATE	REVISION DESCRIPTION
-	-	-
-	-	-
-	-	-
-	-	-
-	-	-
1	10/27/11	ADD DETAIL 1AND 2 REDRAW STD. WING ENDWALL

THE INFORMATION, INCLUDING ESTIMATED QUANTITIES OF WORK, SHOWN ON THESE SHEETS IS BASED ON LIMITED INVESTIGATIONS BY THE STATE AND IS IN NO WAY WARRANTED TO INDICATE THE CONDITIONS OF ACTUAL QUANTITIES OF WORK WHICH WILL BE REQUIRED.

Plotted Date: 11/16/2011

NOT TO SCALE

STATE OF CONNECTICUT
DEPARTMENT OF TRANSPORTATION

Filename: working_revisions.dgn Model: HW-506_01

SUBMITTED BY: NAME/DATE/TIME:

APPROVED BY: NAME/DATE/TIME:

CTDOT STANDARD SHEET

OFFICE OF ENGINEERING

STANDARD SHEET TITLE:

ENDWALLS, SLOPE PAVED INLETS AND OUTLETS

STANDARD SHEET NO.:

HW-506_01

TYPE "L" ENDWALL DIMENSIONS				
D INS. / (mm)	H INS. / (mm)	½L INS. / (mm)	BATTER INS / FT	B INS. / (mm)
12" (305)	4'-6"(1372)	2'-3"(686)	2½"(5:1)	1'-11¼"(590)
15"(375-400)	4'-9"(1448)	2'-9"(838)	2½"(5:1)	1'-11⅞"(606)
18"(457)	5'-0"(1524)	3'-3"(991)	2½"(5:1)	2'-0½"(622)
24"(610)	5'-6"(1676)	4'-3"(1295)	2½"(5:1)	2'-1¾"(654)
30"(750-800)	6'-0"(1829)	5'-3"(1600)	2½"(5:1)	2'-3"(686)
36"(914)	6'-6"(1981)	6'-3"(1905)	3"(4:1)	2'-7½"(800)
42"(1067)	7'-0"(2134)	7'-3"(2210)	3"(4:1)	2'-9"(838)
48"(1219)	7'-6"(2286)	8'-3"(2515)	3"(4:1)	2'-10½"(876)

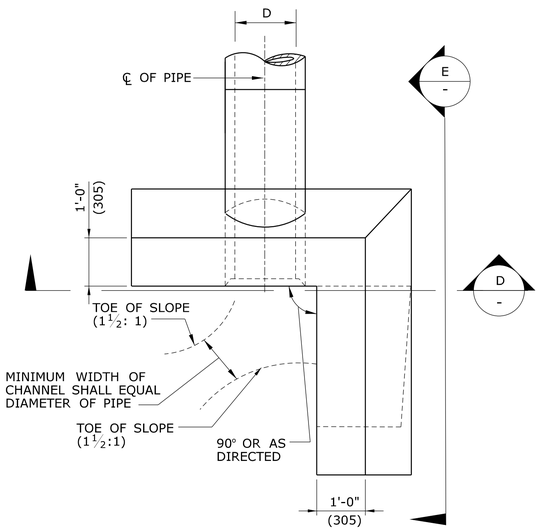

PLAN

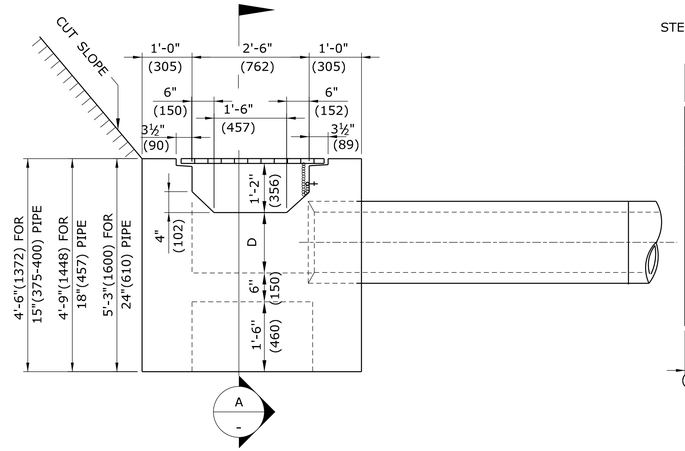

SIDE ELEVATION

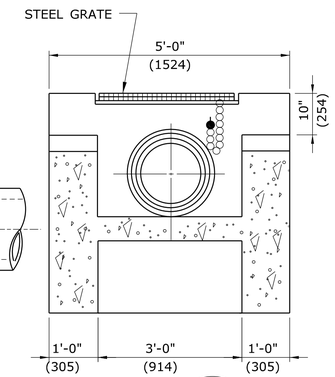

SECTION A

GENERAL NOTES:

1. THESE ENDWALLS SHALL ONLY BE USED AT LOCATIONS WHERE THEY ARE OUTSIDE THE DESIGN CLEAR ZONE.
2. FOR ALL TYPE "D-G" & "L" ENDWALLS, ALL EDGES OF EXPOSED SURFACES SHALL BE CHAMFERED APPROXIMATELY 1" (25).
3. ALL CONSTRUCTION DIMENSIONS ARE NOMINAL.
4. WHEN CONSTRUCTING TYPE "D-G" ENDWALLS, CARE MUST BE TAKEN TO HAVE THE SHORT AXIS OF THE WELL OPENING PARALLEL TO THE LONG AXIS OF THE GRATE IN ORDER TO ALLOW THE BEARING BARS TO PERFORM THEIR FUNCTION PROPERLY.
5. TYPE "D-G" AND "L" ENDWALLS SHALL BE CONSTRUCTED OF CLASS "A" CONCRETE OR CEMENT RUBBLE MASONRY.
6. STEEL GRATING SHALL BE MECHANICALLY LOCKED UNDER HYDRAULIC PRESSURE, WELDED, OR ELECTROFORGED. APPROXIMATE WEIGHT = 45 LBS. (20kg) THE GRATE SHALL BE GALVANIZED IN ACCORDANCE WITH M.06.03. ALL WELDING SHALL BE PERFORMED IN ACCORDANCE WITH AWS D1.1 - STRUCTURAL WELDING CODE.
7. ALL REINFORCING BARS SHALL HAVE A 3" (76) MIN. COVER.
8. STEEL GRATE SHALL CONFORM TO ASTM A-36 STEEL.
9. D = INSIDE DIAMETER OF PIPE.

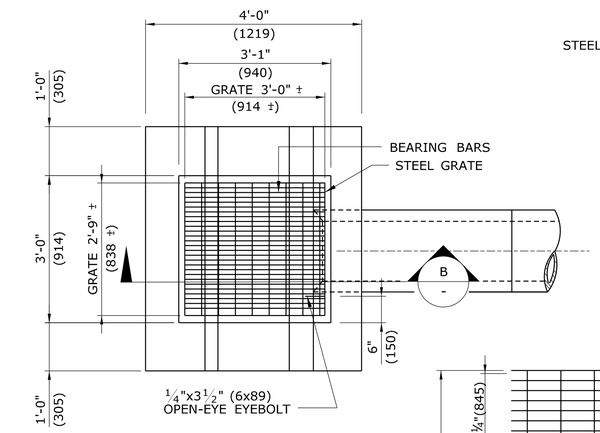

PLAN

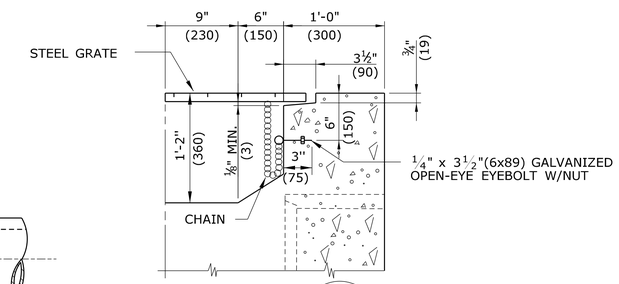

SECTION B

HALF SECTION SHOWING LOCATION OF CHAIN & EYEBOLT

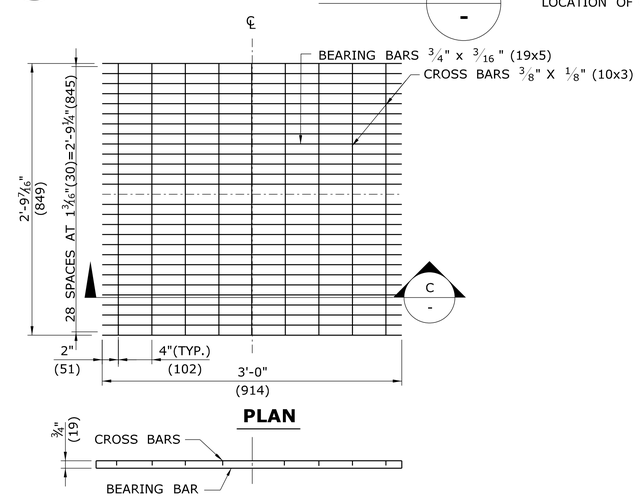

PLAN

SECTION C STEEL GRATE

TYPE "D-G" ENDWALL DIMENSIONS	
PIPE DIAMETER IN. (mm)	CLASS "A" CONCRETE VOLUME CY(m^3)
15"(375-400)	2.44(1.9)
18"(457)	2.57(2.0)
24"(610)	2.85(2.2)

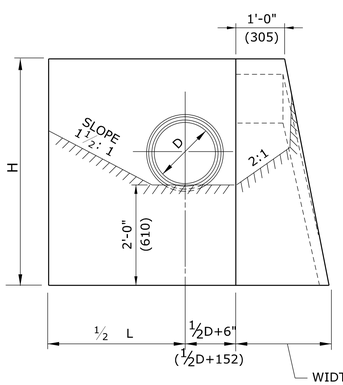

SECTION D

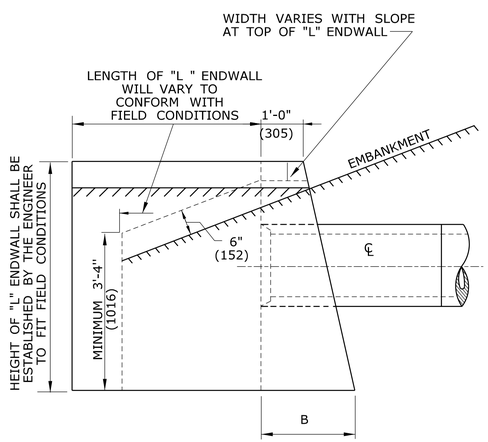

SECTION E

TYPE "L" ENDWALL

TYPE "D-G" ENDWALL

ALL METRIC DIMENSIONS ARE IN MILLIMETERS (mm) UNLESS OTHERWISE NOTED

REV.	DATE	REVISION DESCRIPTION
-	-	-
-	-	-
-	-	-
-	-	-
-	-	-
-	-	-

THE INFORMATION, INCLUDING ESTIMATED QUANTITIES OF WORK, SHOWN ON THESE SHEETS IS BASED ON LIMITED INVESTIGATIONS BY THE STATE AND IS IN NO WAY WARRANTED TO INDICATE THE CONDITIONS OF ACTUAL QUANTITIES OF WORK WHICH WILL BE REQUIRED.

Plotted Date: 6/23/2011

NOT TO SCALE

STATE OF CONNECTICUT
DEPARTMENT OF TRANSPORTATION

Filename: CTDOT_HIGHWAY_STD_JUNE2011.dgn Model: 4 - HW-506_02

SUBMITTED BY: NAME/DATE/TIME:

APPROVED BY: NAME/DATE/TIME:

CTDOT STANDARD SHEET

OFFICE OF ENGINEERING

STANDARD SHEET TITLE:

TYPE "D-G" & "L" ENDWALLS

STANDARD SHEET NO.:

HW-506_02

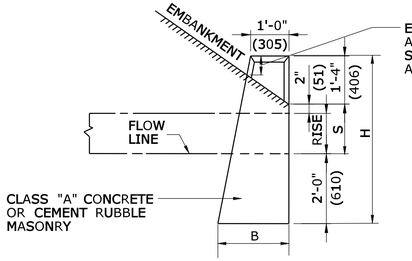

WALL AT FOOT OF SLOPE

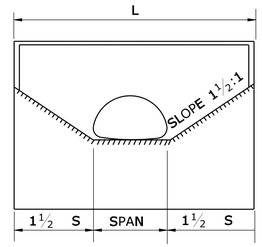

FRONT ELEVATION

DIMENSIONS AND QUANTITIES FOR ONE ENDWALL BASED ON S = RISE + 2"(51)							
SPAN	RISE	S	H	L	BATTER	B	VOL.
INS.(mm)	INS.(mm)	FT.& INS.(mm)	FT.& INS.(mm)	FT.& INS.(mm)	FT.& INS.(mm)	FT.& INS.(mm)	C.Y.(m^3)
18(457)	11(340)	1'-1"(390)	4'-5"(1390)	4'-9(1450)	2½"5:1)	1'-11"(580)	1.13(.9)
22(559)	13(380)	1'-3"(430)	4'-7"(1430)	5'-7"(1700)	2½"(5:1)	1'-11½"(590)	1.40(1.1)
25(560)	16(420)	1'-6"(470)	4'-10"(1470)	6'-7"(2000)	2½"(5:1)	2'-0¼"(600)	1.78(1.3)
29(680)	18(500)	1'-8"(550)	5'-0"(1550)	7'-5"(2260)	2½"(5:1)	2'-0½"(610)	2.12(1.6)
36(800)	22(580)	2'-0"(630)	5'-4"(1630)	9'-0"(2750)	2½"(5:1)	2'-1⅜"(630)	2.77(2.1)
43(910)	27(660)	2'-5"(710)	5'-9"(1710)	10'-10"(3300)	2½"(5:1)	2'-2⅜"(640)	3.68(2.7)
50(1030)	31(740)	2'-9"(790)	6'-1"(1790)	12'-5"(3780)	2½"(5:1)	2'-3¼"(660)	4.57(3.2)
58(1150)	36(820)	3'-2"(870)	6'-6"(1870)	14'-4"(4370)	3"(4:1)	2'-7½"(770)	5.17(4.0)*
65(1390)	40(970)	3'-6"(1020)	6'-10"(2020)	15'-11"(4850)	3"(4:1)	2'-8½"(810)	6.52(5.0)*
72(1630)	44(1120)	3'-10"(1170)	7'-2"(2170)	17'-6"(5330)	3"(4:1)	2'-9½"(840)	7.61(5.8)*
* VOLUME BASED ON AREA OF PIPE. ARCH AND WALL THICKNESS HAS BEEN DEDUCTED.							
A TOLERANCE OF PLUS OR MINUS 1 INCH (25) WILL BE PERMITTED IN DIMENSIONS FOR SPAN, RISE, H, L AND B.							

STANDARD ENDWALL FOR PIPE-ARCH

LEGEND

H = TOTAL HEIGHT OF ENDWALL

B = BASE

S = MINIMUM HEIGHT OF SLOPE ABOVE FLOW LINE AT FACE OF WALL = RISE + 2"(51)

L = LENGTH OF WALL = 3S + SPAN

ALL EDGES OF EXPOSED SURFACES SHALL BE CHAMFERED APPROXIMATELY 1"(25).

GENERAL NOTES:

1. ALL CONSTRUCTION DIMENSIONS ARE NOMINAL.
2. THESE ENDWALLS SHALL ONLY BE USED AT LOCATIONS WHERE THEY ARE OUTSIDE THE DESIGN CLEAR ZONE.
3. THE COST OF REINFORCING BARS SHALL BE INCLUDED IN THE CONTRACT UNIT PRICE FOR CLASS "A" CONCRETE.
4. ALL REINFORCING BARS SHALL HAVE A 3"(76) MIN. COVER.

DIMENSIONS AND QUANTITIES FOR ONE WING TYPE ENDWALL								
SPAN	RISE	H	K	L	P	R	W	VOL.
INS. (mm)	INS. (mm)	FT. & INS. (mm)	FT. & INS. (mm)	FT. & INS. (mm)	FT. & INS. (mm)	FT. & INS. (mm)	FT. & INS. (mm)	C.Y.(m^3)
58 (1473)	36 (914)	6'-8" (2032)	10'-11½" (3340)	9'-1¾" (2788)	1'-4⅞" (429)	3'-4⅞" (1038)	5'-5¾" (1670)	6.00 (4.6)
65 (1651)	40 (1016)	7'-0" (2134)	11'-9" (3581)	9'-8¾" (2965)	1'-5⅞" (454)	3'-8⅞" (1140)	6'-3" (1905)	7.00 (5.4)
72 (1829)	44 (1118)	7'-4" (2235)	12'-6½" (3823)	10'-3¾" (3143)	1'-6⅞" (479)	4'-0⅞" (1241)	7'-0¼" (2140)	8.50 (6.5)

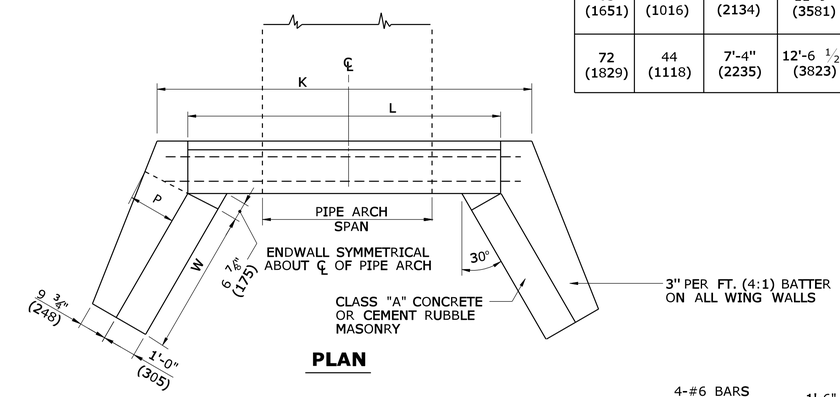

PLAN

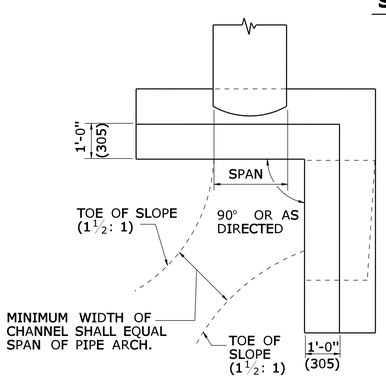

PLAN

TYPE "L" ENDWALL DIMENSIONS					
SPAN	RISE	H	½L	BATTER	B
INS.(mm)	INS.(mm)	FT.&INS.(mm)	FT.&INS.(mm)	INS/FT.(mm/mm)	FT.&INS.(mm)
18(450)	11(340)	4'-5"(1390)	2'-4½"(725)	2½"(5:1)	1'-11"(580)
22(510)	13(380)	4'-7"(1430)	2'-9½"(850)	2½"(5:1)	1'-11½"(590)
25(560)	16(420)	4'-10"(1470)	3'-3½"(1000)	2½"(5:1)	2'-0¼"(600)
29(680)	18(500)	5'-0"(1550)	3'-8½"(1130)	2½"(5:1)	2'-0½"(610)
36(800)	22(580)	5'-4"(1630)	4'-6"(1375)	2½"(5:1)	2'-1⅜"(630)
43(910)	27(660)	5'-9"(1710)	5'-5"(1650)	2½"(5:1)	2'-2⅜"(640)
50(1030)	31(740)	6'-1"(1790)	6'-2½"(1890)	2½"(5:1)	2'-3¼"(660)
58(1150)	36(820)	6'-6"(1870)	7'-2"(2185)	3"(4:1)	2'-7½"(770)
65(1390)	40(970)	6'-10"(2020)	7'- 11½"(2425)	3"(4:1)	2'-8½"(810)
72(1630)	44(1120)	7'-2"(2170)	8'-9"(2665)	3"(4:1)	2'-9½"(840)
A TOLERANCE OF PLUS OR MINUS 1" (25) WILL BE PERMITTED FOR SPAN, RISE, ½L AND B DIMENSIONS.					

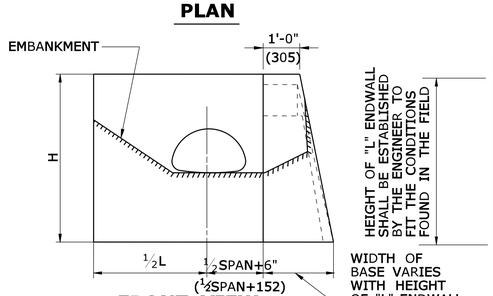

FRONT VIEW

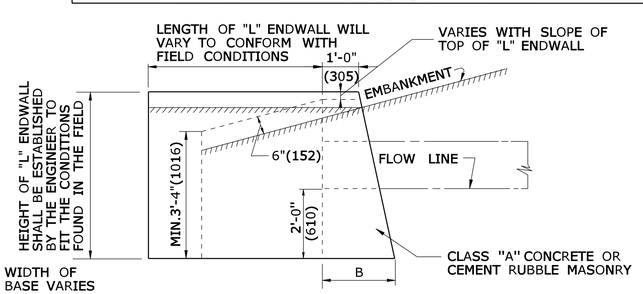

SIDE VIEW

TYPE "L" ENDWALL FOR PIPE-ARCH

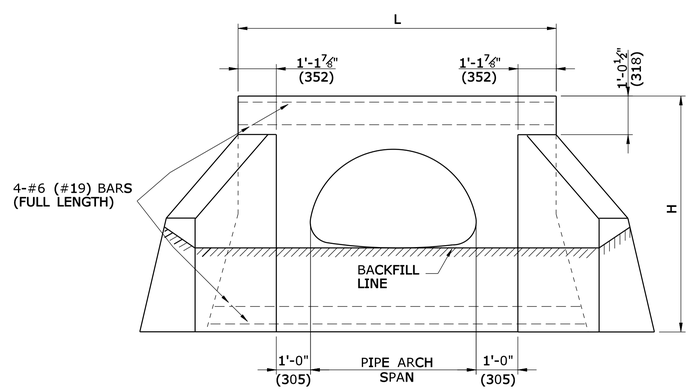

ELEVATION

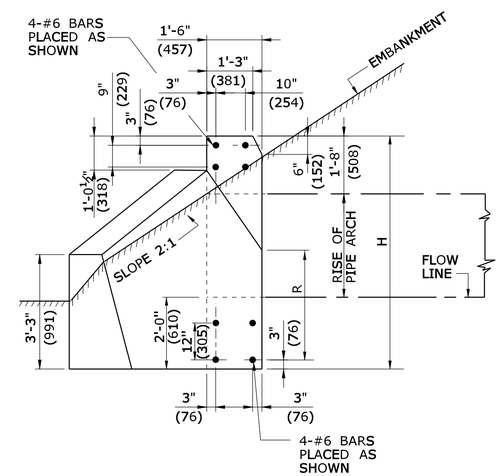

SIDE VIEW ELEVATION

STANDARD WING TYPE ENDWALL FOR PIPE-ARCH

ALL METRIC DIMENSIONS ARE IN MILLIMETERS (mm) UNLESS OTHERWISE NOTED

REV.	DATE	REVISION DESCRIPTION
-	-	-
-	-	-
-	-	-
-	-	-
-	-	-
-	-	-

THE INFORMATION, INCLUDING ESTIMATED QUANTITIES OF WORK, SHOWN ON THESE SHEETS IS BASED ON LIMITED INVESTIGATIONS BY THE STATE AND IS IN NO WAY WARRANTED TO INDICATE THE CONDITIONS OF ACTUAL QUANTITIES OF WORK WHICH WILL BE REQUIRED.

Plotted Date: 9/11/2009

NOT TO SCALE

STATE OF CONNECTICUT
DEPARTMENT OF TRANSPORTATION

Filename: CTDOT_HIGHWAY_STD.dgn Model: HW-506_03

SUBMITTED BY: NAME/DATE/TIME:

APPROVED BY: NAME/DATE/TIME:

CTDOT STANDARD SHEET

OFFICE OF ENGINEERING

STANDARD SHEET TITLE:

ENDWALLS FOR PIPE-ARCH

STANDARD SHEET NO.:

HW-506_03

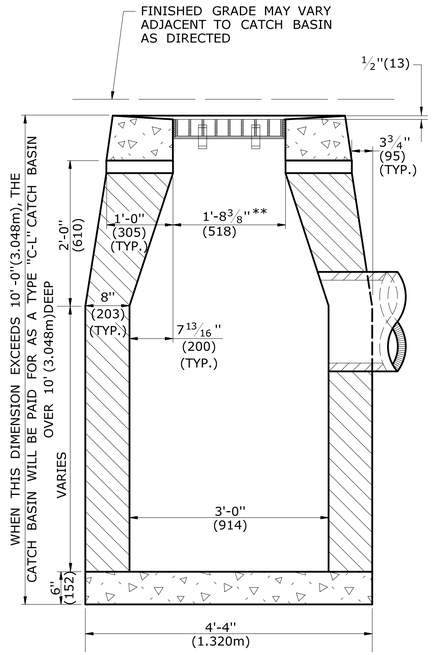

SECTION B

TYPE "C-L" CATCH BASIN

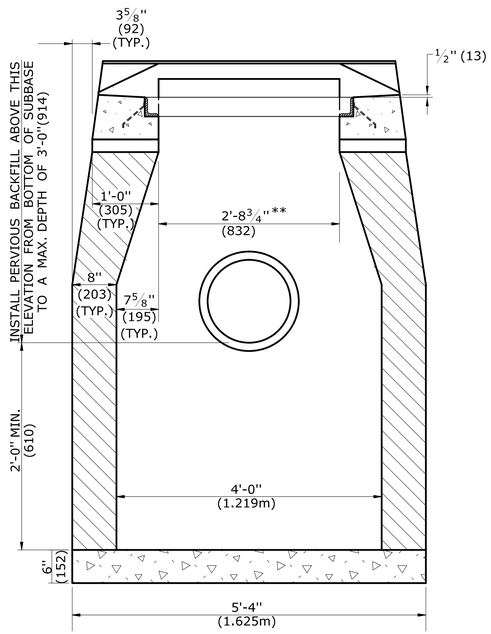

SECTION A

TYPE "C" & "C-L" CATCH BASIN (TYPE "C" TOP SHOWN)

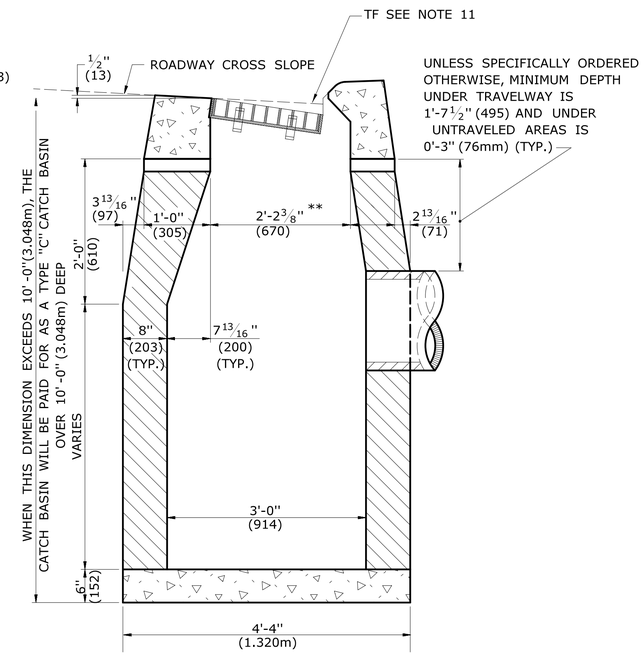

SECTION B

TYPE "C" CATCH BASIN

GENERAL NOTES:

1. FOR DETAILS OF FRAME AND GRATE SEE STANDARD SHEET HW-507_08.
2. USE APPROPRIATE CONCRETE TOP FOR CURBING SHOWN ON PLANS. IF CURBING IS NOT SPECIFIED ON THE PLANS, IT SHALL BE CONSTRUCTED AS DIRECTED BY THE ENGINEER.
3. ALL FACES OF STRUCTURES IN CONTACT WITH CONCRETE PAVEMENT SHALL BE COVERED WITH A LAYER OF TAR PAPER OR APPROVED EQUAL. THE COST FOR THE PAPER SHALL BE INCLUDED IN THE BID PRICE FOR THE TYPE OF CATCH BASIN INSTALLED.
4. USE 6'-0" (1.830m) ON UPGRADE SIDE OF CONTINUOUS GRADE AND 1'-0" (305mm) ON DOWNGRADE SIDE OF CONTINUOUS GRADE OR AS DIRECTED.
5. IF MASONRY UNITS ARE REQUIRED, THE BASIN SHALL BE CONSTRUCTED IN CONFORMANCE WITH THE OVER ALL DIMENSIONS SHOWN HERE AND SECTION 5.07 OF THE STATE OF CONNECTICUT'S STANDARD SPECIFICATIONS. CORBELLING SHALL BE PERMITTED TO A MAXIMUM OF 3" (75mm.) NO PROJECTION SHALL EXTEND INSIDE THE LIMITS NOTED BY **.
6. WALL THICKNESS OF ALL CB'S OVER 10' (3.048m) DEEP SHALL BE INCREASED TO 12" (305mm) THICK. INSIDE DIMENSION SHALL REMAIN THE SAME. 12" (305mm) THICKNESS WILL START AFTER THE FIRST 10' (3.048m).
7. TO CONVEY SUBSURFACE DRAINAGE, OPENINGS SHALL BE FORMED IN THE FOUR WALLS AT OR IMMEDIATELY ABOVE THE BOTTOM OF THE PERVIOUS BACKFILL.
8. MINIMUM CONCRETE COMPRESSIVE STRENGTH OF F'c = 4000 PSI (27,580 kPa) SHALL BE OBTAINED PRIOR TO SHIPPING.
9. LATEST STATE OF CONNECTICUT'S STANDARD SPECIFICATIONS AND SUPPLEMENTALS SHALL GOVERN.
10. SPACER MAY BE CMU OR PRECAST WITH REQUIRED REINFORCING (RECOMMENDED BY THE MANUFACTURER) AS NEEDED TO PROVIDE PROPER GRADE SHOWN ON PLANS.
11. TOP OF FRAME (TF) ELEVATION SHALL BE MEASURED IN THE CENTER OF GRATE @ GUTTER LINE.

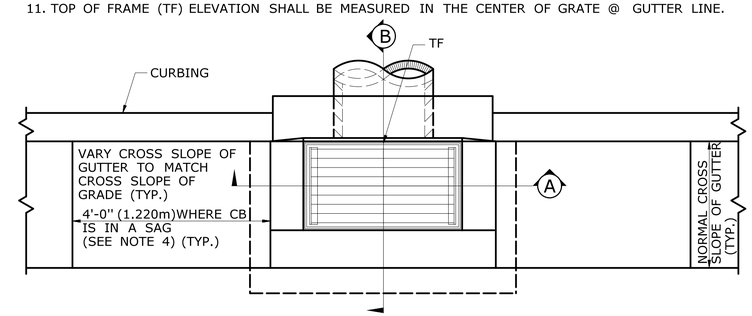

PLAN

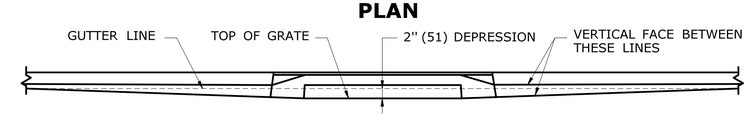

FOR CATCH BASINS IN A LINE OF 4" (102) CONCRETE PARK CURBING OR 4" (102) BITUMINOUS CONCRETE PARK CURBING

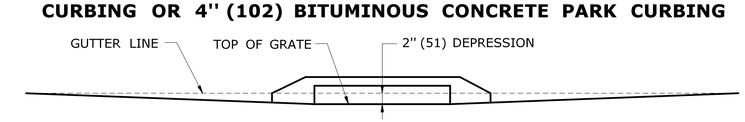

FOR CATCH BASINS WHERE NO CURBING OF ANY TYPE EXISTS OR IS PROPOSED

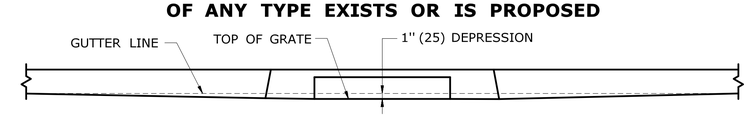

FOR CATCH BASINS IN A LINE OF 6" (152) CONCRETE CURBING OR 6" (152) STONE CURBING

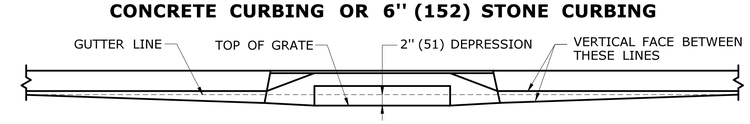

FOR CATCH BASINS IN A LINE OF 6" (152) BITUMINOUS CONCRETE LIP CURBING (MACHINE FORMED)

DETAILS OF DEPRESSED GUTTER STRIP FOR TYPE "C" CATCH BASIN

ALL METRIC DIMENSIONS ARE IN MILLIMETERS (mm) UNLESS OTHERWISE NOTED.

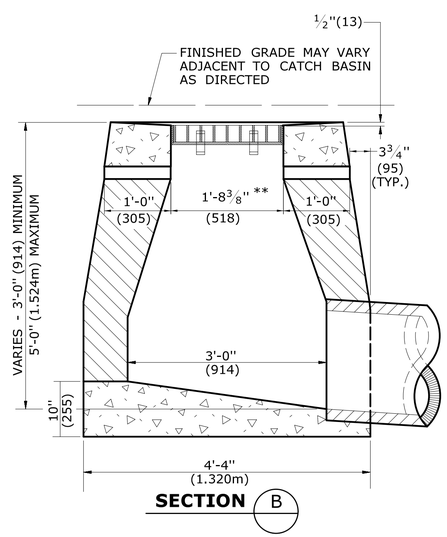

SECTION B

TYPE "C-L" DROP INLET

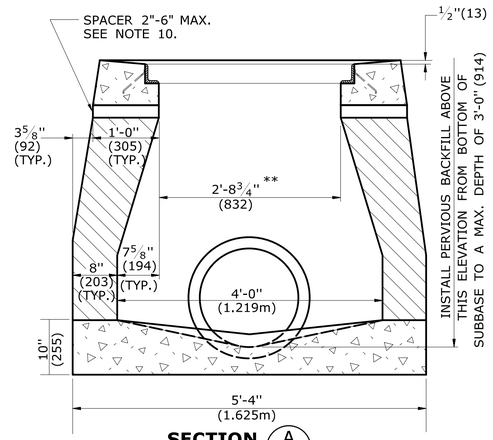

SECTION A

TYPE "C" & "C-L" DROP INLET (TYPE "C-L" TOP SHOWN)

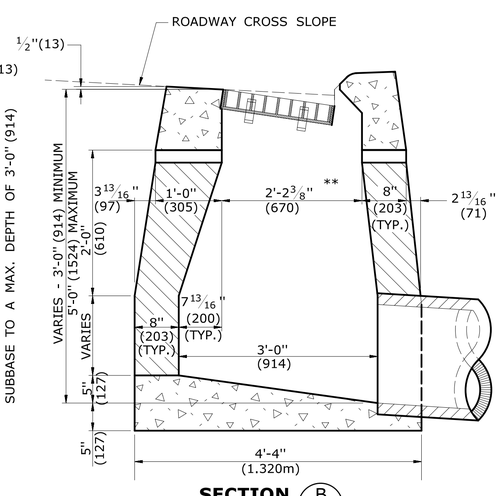

SECTION B

TYPE "C" DROP INLET

REV.	DATE	REVISION DESCRIPTION
4	7/13	ADD NOTE 11 -
3	9/30/11	ADD SPACERS AND NOTE 10. -
2	9/15/11	MODIFIED DETAILS TO BE CONSISTANT WITH PRECAST -
1	7/28/11	REMOVE MIN. DROP NOTE -
-	-	- -
-	-	- -

THE INFORMATION, INCLUDING ESTIMATED QUANTITIES OF WORK, SHOWN ON THESE SHEETS IS BASED ON LIMITED INVESTIGATIONS BY THE STATE AND IS IN NO WAY WARRANTED TO INDICATE THE CONDITIONS OF ACTUAL QUANTITIES OF WORK WHICH WILL BE REQUIRED.

Plotted Date: 6/10/2013

NOT TO SCALE

STATE OF CONNECTICUT
DEPARTMENT OF TRANSPORTATION

Filename: CTDOT_HIGHWAY_STD2013.dgn Model: 6-HW-507_01

SUBMITTED BY: NAME/DATE/TIME:

APPROVED BY: NAME/DATE/TIME:

CTDOT STANDARD SHEET

OFFICE OF ENGINEERING

STANDARD SHEET TITLE:

TYPE "C", "C-L" & DROP INLET CATCH BASIN

STANDARD SHEET NO.:

HW-507_01

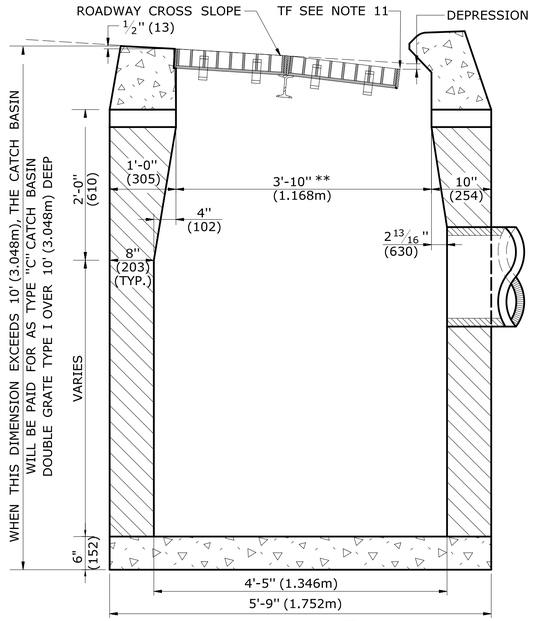

SECTION B

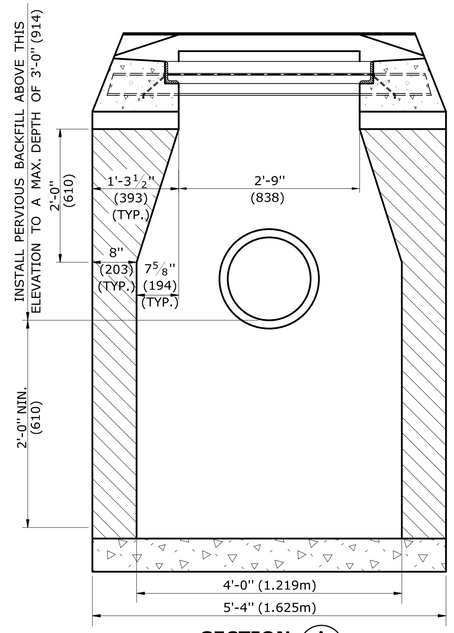

SECTION A

TYPE "C" CATCH BASIN DOUBLE GRATE - TYPE I

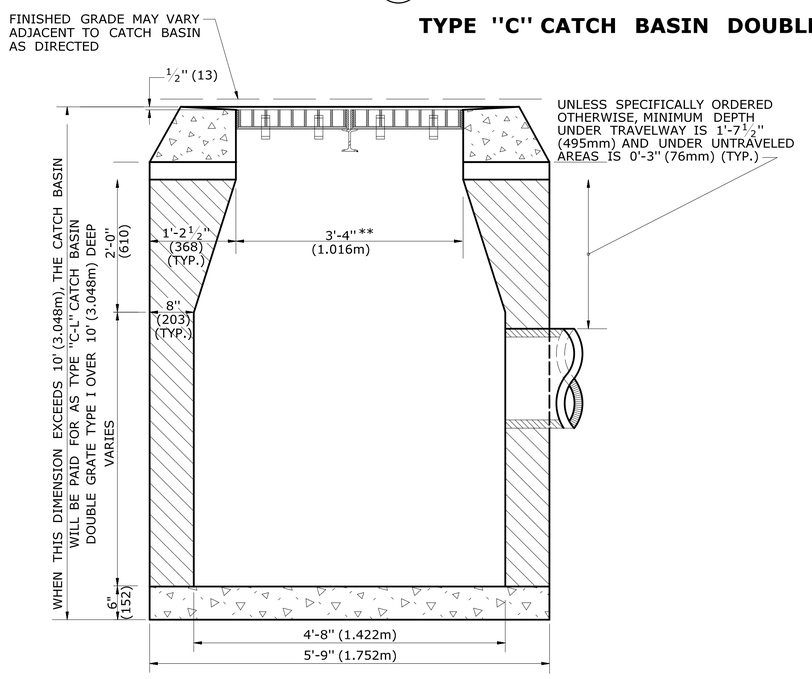

SECTION B

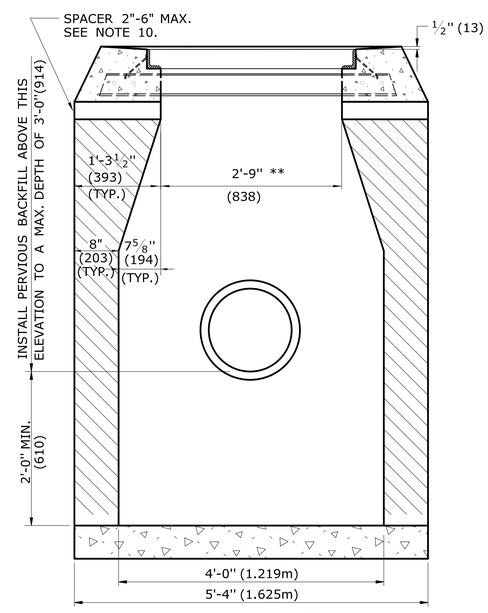

SECTION A

TYPE "C-L" CATCH BASIN DOUBLE GRATE - TYPE I

GENERAL NOTES:

1. FOR DETAILS OF FRAME AND GRATE SEE STANDARD SHEET HW-507_08.
2. USE APPROPRIATE CONCRETE TOP FOR CURBING SHOWN ON PLANS. IF CURBING IS NOT SPECIFIED ON THE PLANS, IT SHALL BE CONSTRUCTED AS DIRECTED BY THE ENGINEER.
3. ALL FACES OF STRUCTURES IN CONTACT WITH CONCRETE PAVEMENT SHALL BE COVERED WITH A LAYER OF TAR PAPER OR APPROVED EQUAL. THE COST FOR THE PAPER SHALL BE INCLUDED IN THE BID PRICE FOR THE TYPE OF CATCH BASIN INSTALLED.
4. USE 6'-0" (1.830m) ON UPGRADE SIDE OF CONTINUOUS GRADE AND 1'-0" (305) ON DOWNGRADE SIDE OF CONTINUOUS GRADE OR AS DIRECTED.
5. IF MASONRY UNITS ARE REQUIRED, THE BASIN SHALL BE CONSTRUCTED IN CONFORMANCE WITH THE OVER ALL DIMENSIONS SHOWN HERE AND SECTION 5.07 OF THE STATE OF CONNECTICUT'S STANDARD SPECIFICATIONS. CORBELLING SHALL BE PERMITTED TO A MAXIMUM OF 3" (75mm) . NO PROJECTION SHALL EXTEND INSIDE THE LIMITS NOTED BY **.
6. WALL THICKNESS OF ALL CB'S OVER 10' (3.048m) DEEP SHALL BE INCREASED TO 12" (305mm) THICK. INSIDE DIMENSION SHALL REMAIN THE SAME. (12" (305) THICKNESS WILL START AFTER THE FIRST 10' (3.048m)).
7. TO CONVEY SUBSURFACE DRAINAGE, OPENINGS SHALL BE FORMED IN THE FOUR WALLS AT OR IMMEDIATELY ABOVE THE BOTTOM OF THE PERVIOUS BACKFILL.
8. MINIMUM CONCRETE COMPRESSIVE STRENGTH OF F'c = 4000 PSI (27,580 kPa) SHALL BE OBTAINED PRIOR TO SHIPPING.
9. LATEST STATE OF CONNECTICUT'S STANDARD SPECIFICATIONS AND SUPPLEMENTALS SHALL GOVERN.
10. SPACER MAY BE CMU OR PRECAST WITH REQUIRED REINFORCING (RECOMMENDED BY MANUFACTURER) AS NEEDED TO PROVIDE PROPER GRADE SHOWN ON PLANS.
11. TOP OF FRAME (FL) ELEVATION SHALL BE MEASURED IN THE CENTER OF THE GRATE @ GUTTER LINE.

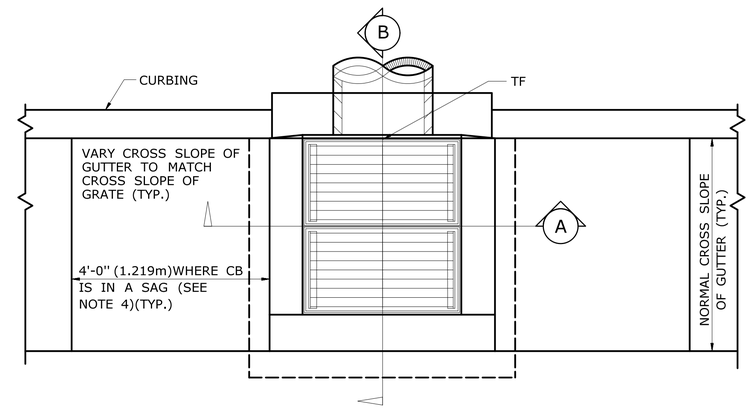

PLAN

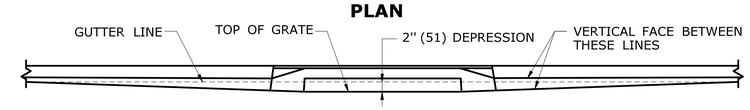

FOR CATCH BASINS IN A LINE OF 4" (102) (CONCRETE PARK CURBING OR 4" (102) BITUMINOUS CONCRETE PARK CURBING

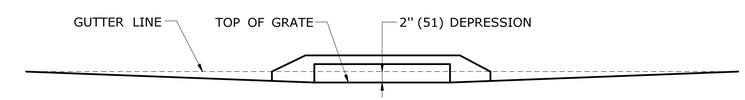

FOR CATCH BASINS WHERE NO CURBING OF ANY TYPE EXISTS OR IS PROPOSED

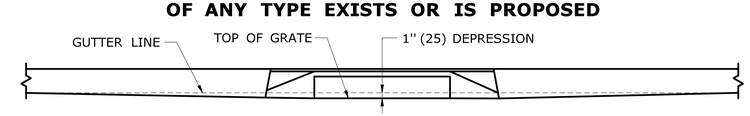

FOR CATCH BASINS IN A LINE OF 6"(152) CONCRETE CURBING OR 6"(152) STONE CURBING

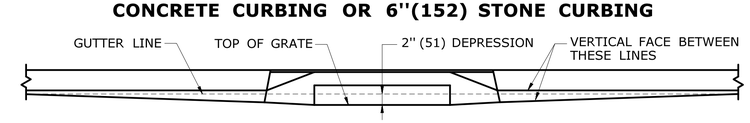

FOR CATCH BASINS IN A LINE OF 6" (152) BITUMINOUS CONCRETE LIP CURBING (MACHINE FORMED)

DETAILS OF DEPRESSED GUTTER STRIP FOR TYPE "C" CATCH BASIN

ALL METRIC DIMENSIONS ARE IN MILLIMETERS (mm) UNLESS OTHERWISE NOTED

REV.	DATE	REVISION DESCRIPTION
-	-	-
-	-	-
4	7/13	ADD NOTE 11
3	9/30/11	ADD SPACERS AND NOTE 10.
2	9/15/11	MODIFIED DETAILS TO BE CONSISTANT WITH PRECAST
1	7/28/11	REMOVE MIN. DROP NOTE

THE INFORMATION, INCLUDING ESTIMATED QUANTITIES OF WORK, SHOWN ON THESE SHEETS IS BASED ON LIMITED INVESTIGATIONS BY THE STATE AND IS IN NO WAY WARRANTED TO INDICATE THE CONDITIONS OF ACTUAL QUANTITIES OF WORK WHICH WILL BE REQUIRED.

Plotted Date: 3/21/2013

NOT TO SCALE

STATE OF CONNECTICUT
DEPARTMENT OF TRANSPORTATION

Filename: June2013.dgn Model: HW-507_02

SUBMITTED BY: NAME/DATE/TIME:

APPROVED BY: NAME/DATE/TIME:

CTDOT STANDARD SHEET

OFFICE OF ENGINEERING

STANDARD SHEET TITLE:

TYPE "C" , "C-L" & DOUBLE GRATE TYPE - I

STANDARD SHEET NO.:

HW-507_02

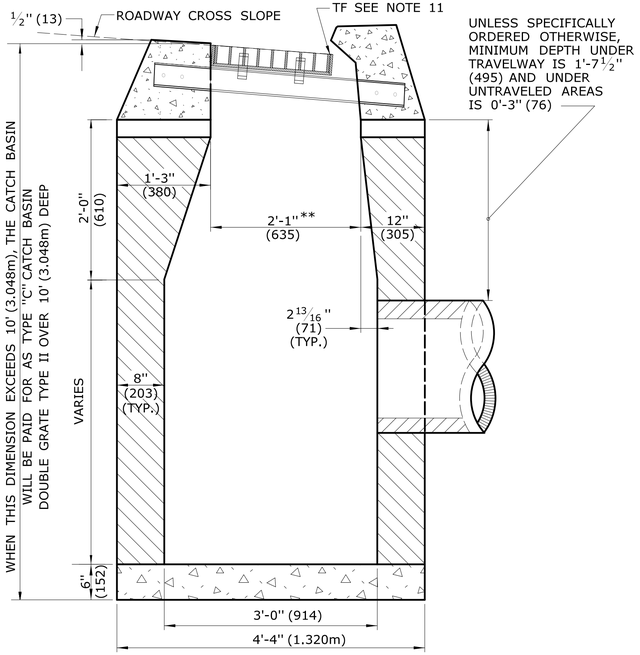

SECTION B

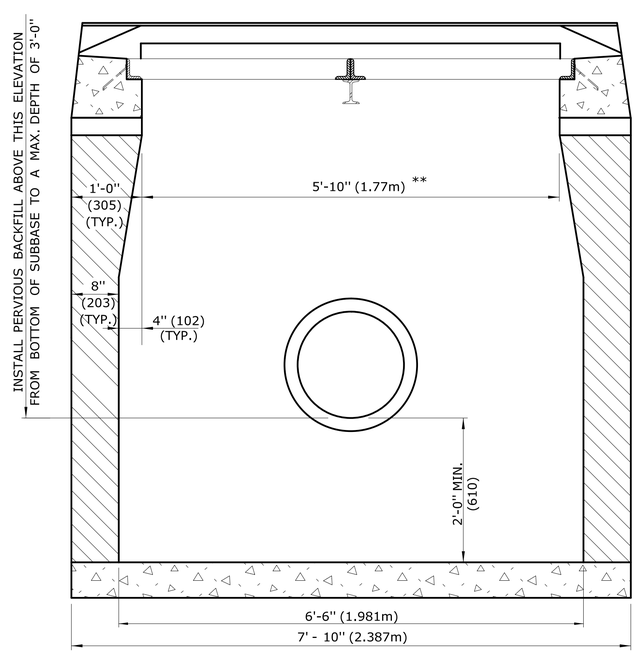

SECTION A

TYPE "C" CATCH BASIN DOUBLE GRATE - TYPE II

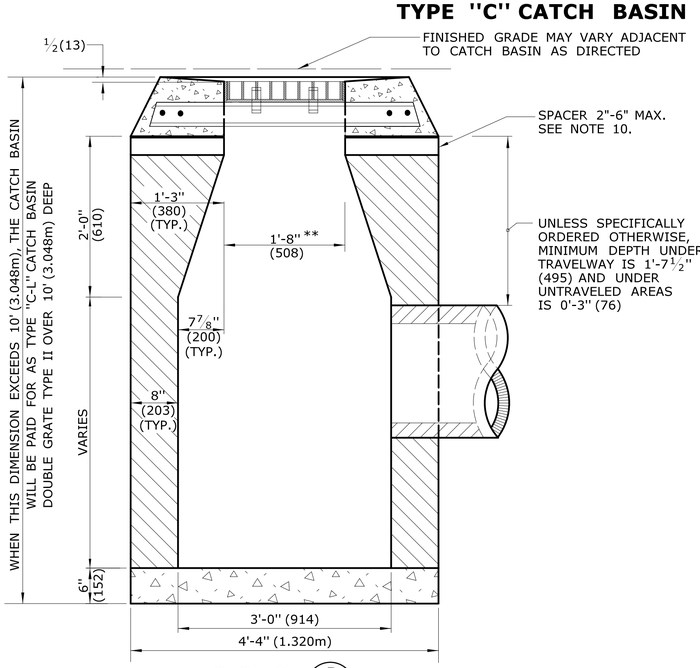

SECTION B

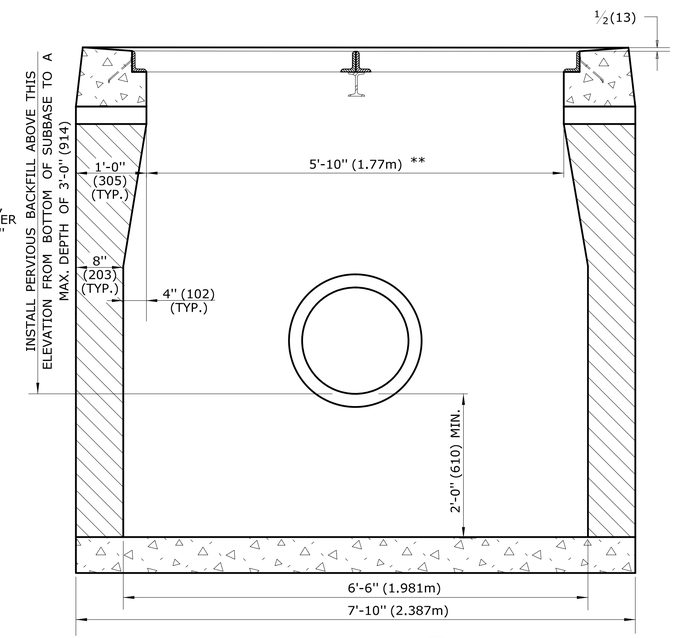

SECTION A

TYPE "C-L" CATCH BASIN DOUBLE GRATE - TYPE II

GENERAL NOTES:

1. FOR DETAILS OF FRAME AND GRATE SEE STANDARD SHEET HW-507_08.
2. USE APPROPRIATE CONCRETE TOP FOR CURBING SHOWN ON PLANS. IF CURBING IS NOT SPECIFIED ON THE PLANS, IT SHALL BE CONSTRUCTED AS DIRECTED BY THE ENGINEER.
3. ALL FACES OF STRUCTURES IN CONTACT WITH CONCRETE PAVEMENT SHALL BE COVERED WITH A LAYER OF TAR PAPER OR APPROVED EQUAL. THE COST FOR THE PAPER SHALL BE INCLUDED IN THE BID PRICE FOR THE TYPE OF CATCH BASIN INSTALLED.
4. USE 6'-0" (1.830m) ON UPGRADE SIDE OF CONTINUOUS GRADE AND 1'-0" (305) ON DOWNGRADE SIDE OF CONTINUOUS GRADE OR AS DIRECTED.
5. IF MASONRY UNITS ARE REQUIRED, THE BASIN SHALL BE CONSTRUCTED IN CONFORMANCE WITH THE OVER ALL DIMENSIONS SHOWN HERE AND SECTION 5.07 OF THE STATE OF CONNECTICUT'S STANDARD SPECIFICATIONS. CORBELLING SHALL BE PERMITTED TO A MAXIMUM OF 3" (75). NO PROJECTION SHALL EXTEND INSIDE THE LIMITS NOTED BY **.
6. WALL THICKNESS OF ALL CB'S OVER 10' (3.048m)DEEP SHALL BE INCREASED TO 12" (305) THICK. INSIDE DIMENSION SHALL REMAIN THE SAME. (12" (305) THICKNESS WILL START AFTER THE FIRST 10' (3.048m)).
7. TO CONVEY SUBSURFACE DRAINAGE, OPENINGS SHALL BE FORMED IN THE FOUR WALLS AT OR IMMEDIATELY ABOVE THE BOTTOM OF THE PERVIOUS BACKFILL.
8. MINIMUM CONCRETE COMPRESSIVE STRENGTH OF F'c = 4000 PSI (27,580 kPa) SHALL BE OBTAINED PRIOR TO SHIPPING.
9. LATEST STATE OF CONNECTICUT'S STANDARD SPECIFICATIONS AND SUPPLEMENTALS SHALL GOVERN.
10. SPACER MAY BE CMU OR PRECAST WITH REQUIRED REINFORCING (RECOMMENDED BY THE MANUFACTURER) AS NEEDED TO PROVIDE PROPER GRADE SHOWN ON PLANS.
11. TOP OF FRAME (TF) ELEVATION SHALL BE MEASURED IN BETWEEN BOTH GRATES @ THE GUTTER.

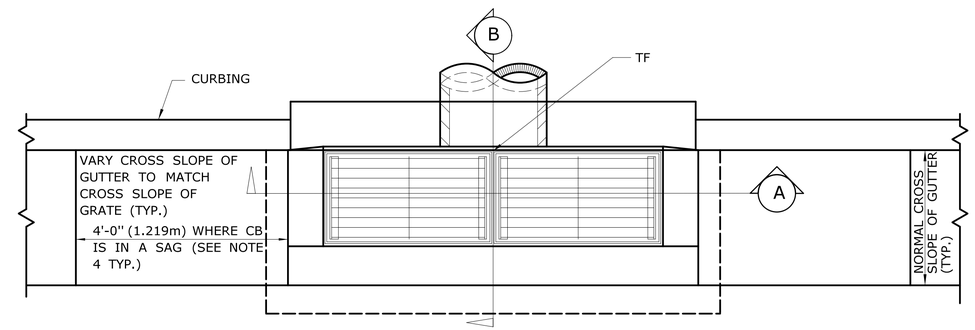

PLAN

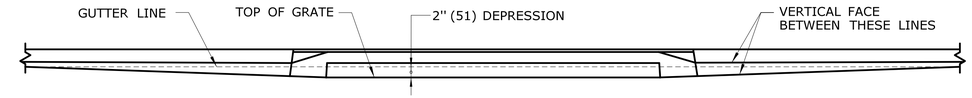

FOR CATCH BASINS IN A LINE OF 4"(102) CONCRETE PARK CURBING OR 4" (102) BITUMINOUS CONCRETE PARK CURBING

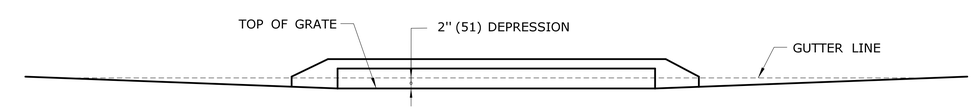

FOR CATCH BASINS WHERE NO CURBING OF ANY TYPE EXISTS OR IS PROPOSED

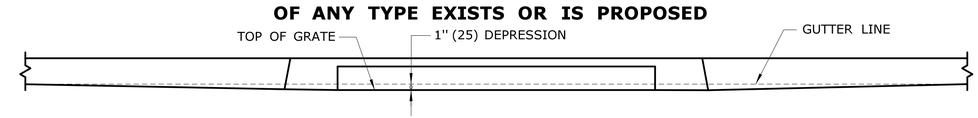

FOR CATCH BASINS IN A LINE OF 6" (152) CONCRETE CURBING OR 6" (152) STONE CURBING

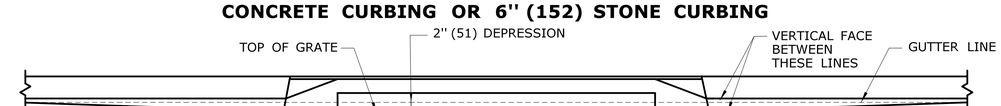

FOR CATCH BASINS IN A LINE OF 6" (152) BITUMINOUS CONCRETE LIP CURBING (MACHINE FORMED)

DETAILS OF DEPRESSED GUTTER STRIP FOR TYPE "C" CATCH BASIN DOUBLE GRATE TYPE II

ALL METRIC DIMENSIONS ARE IN MILLIMETERS (mm) UNLESS OTHERWISE NOTED

REV.	DATE	REVISION DESCRIPTION
-	-	-
-	-	-
4	7/13	ADD NOTE 11
3	10/3/11	ADD SPACERS AND NOTE 10.
2	9/15/11	MODIFIED DETAILS TO BE CONSISTANT WITH PRECAST
1	7/28/11	REMOVE MIN. DROP NOTE

THE INFORMATION, INCLUDING ESTIMATED QUANTITIES OF WORK, SHOWN ON THESE SHEETS IS BASED ON LIMITED INVESTIGATIONS BY THE STATE AND IS IN NO WAY WARRANTED TO INDICATE THE CONDITIONS OF ACTUAL QUANTITIES OF WORK WHICH WILL BE REQUIRED.

Plotted Date: 3/21/2013

NOT TO SCALE

STATE OF CONNECTICUT
DEPARTMENT OF TRANSPORTATION

Filename: June2013.dgn Model: HW-507_03

SUBMITTED BY: NAME/DATE/TIME:

APPROVED BY: NAME/DATE/TIME:

CTDOT STANDARD SHEET

OFFICE OF ENGINEERING

STANDARD SHEET TITLE:

TYPE "C" , "C-L" & DOUBLE GRATE TYPE - II

STANDARD SHEET NO.:

HW-507_03

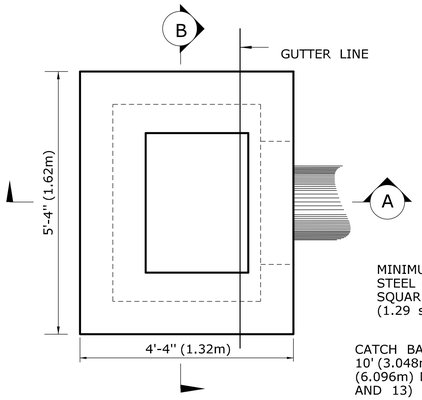

PLAN

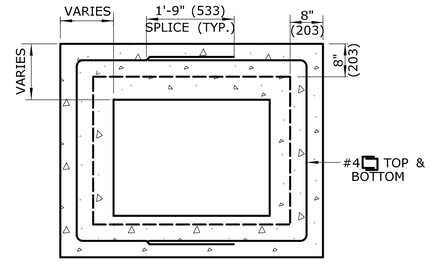

REDUCER SECTION (TYP.)

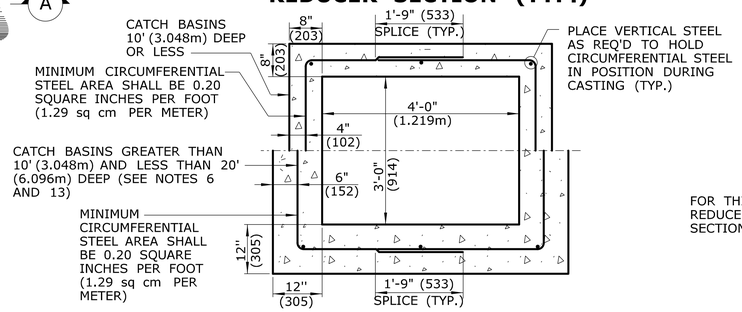

RISER SECTION (TYP.)

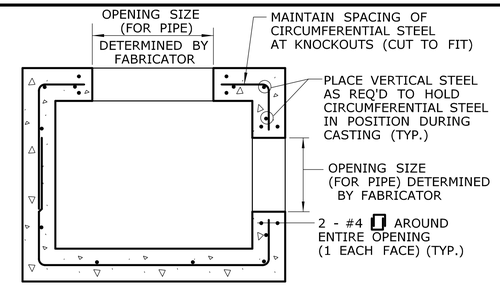

TYPICAL SECTION THRU RISER WITH OPENING

GENERAL NOTES:

1. REINFORCEMENT SHALL CONFORM TO ASTM A615, GRADE 60.
2. DETAILS ON THIS SHEET SHOW STANDARD REINFORCEMENT. WELDED WIRE FABRIC WITH AN AREA EQUAL TO OR GREATER THAN THE REINFORCING SHOWN MAY BE SUBSTITUTED.
3. ALL LAP SPLICES, DEVELOPMENT LENGTHS, BENDS FOR REINFORCEMENT, AND WELDED WIRE FABRIC SHALL CONFORM TO AASHTO STANDARD SPECIFICATIONS FOR HIGHWAY BRIDGES.
4. ALL REINFORCEMENT SHALL HAVE A MINIMUM CLEAR COVER OF 2"(51) , EXCEPT FOR BENEATH BOTTOM REINFORCEMENT IN TOP SLABS, WHERE THE MINIMUM MAY BE 1½"(38).
5. MINIMUM CONCRETE COMPRESSIVE STRENGTH Fc' = 4000 PSI (27,580 kPa SHALL BE OBTAINED PRIOR TO SHIPPING.
6. BASES AND RISERS AT A DEPTH OF 20' (6.096) AND GREATER SHALL BE DESIGNED BY THE CONTRACTOR AND WORKING DRAWINGS SHALL BE SUBMITTED TO THE ENGINEER FOR REVIEW.
7. SEE STANDARD SHEET HW-507_08 FOR CATCH BASIN FRAMES AND GRATES.
8. FOR DOT MAINTENANCE PERSONNEL, RISERS MAY BE PREFABRICATED WITH PIPE OPENINGS IN ALL FOUR WALLS. ADEQUATE REINFORCING AROUND PIPE OPENINGS CONFORMING TO THESE PLANS SHALL BE PROVIDED. ANY RISERS USED WHERE A PIPE OPENING IS TO REMAIN IN PLACE, MUST BE FORMED UP WITH BRICK AS DIRECTED BY THE ENGINEER.
9. RISERS SHALL NEVER HAVE CORNER PIPE ENTRIES. WHERE THE ALIGNMENT OF THE PIPE WITH RESPECT TO THE CORNER OF THE CATCH BASIN CANNOT BE CHANGED, A ROUND STRUCTURE CONFORMING TO ASTM C478 SHALL BE USED. REINFORCING FOR THE ROUND TOP SLAB WITH A RECTANGULAR OPENING SHALL CONFORM TO DETAILS SHOWN HERE.
10. ALL PIPE OPENINGS SHALL BE CLOSED USING MATERIALS WHICH CONFORM TO STATE OF CONNECTICUT STANDARD SPECIFICATIONS SECTION M.08.02. IF THE ENGINEER DETERMINES THAT THE CLOSURE OF ANY PIPE OPENING IS UNSATISFACTORY, THE CONTRACTOR SHALL RECLOSE SAID OPENING AT NO ADDITIONAL COST TO THE STATE. OPENING FOR PIPE SHALL NOT RESULT IN A REDUCED WALL THICKNESS.
11. THE LATEST STATE OF CONNECTICUT STANDARD SPECIFICATIONS AND SUPPLEMENTALS SHALL GOVERN.
12. FOR ADDITIONAL DETAILS, SEE OTHER CATCH BASIN SHEETS.
13. WALL THICKNESS OF ALL CB'S OVER 10' (3.048m) DEEP SHALL BE INCREASED TO 12" (305) THICK. INSIDE DIMENSION SHALL REMAIN THE SAME. (THE 12" (305) THICKNESS WILL START AFTER THE FIRST 10' (3.048m).)
14. BUTYL RUBBER JOINT SEAL SHALL CONFORM TO AASHTO M-198 AND MORTAR SHALL CONFORM TO THE LATEST STATE OF CONNECTICUT STANDARD SPECIFICATIONS MATERIAL SECTION M11.04.
15. SHRINKAGE AND TEMPERATURE REINFORCEMENT SHALL BE PROVIDED IN THE TOPS OF SLABS. THE TOTAL AREA OF REINFORCEMENT PROVIDED SHALL BE AT LEAST 0.125 SQUARE INCHES PER FOOT (0.8 sq cm PER METER) IN EACH DIRECTION. THE MAXIMUM SPACING OF THIS REINFORCEMENT SHALL NOT EXCEED 18 INCHES (457).
16. THE DETAILS SHOWN IN THE PLAN VIEW FOR PRECAST CONCRETE ROUND STRUCTURES SHALL ALSO BE USED FOR CONVERTING MANHOLES TO CATCH BASINS.

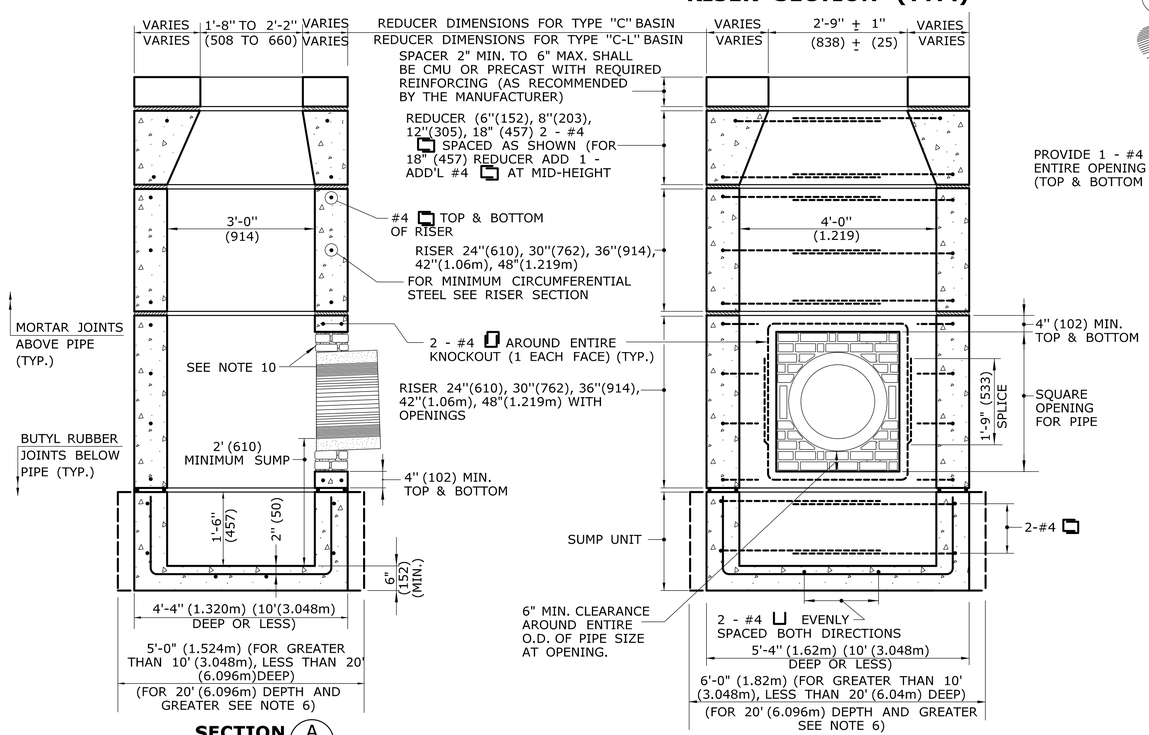

PRECAST CONCRETE TYPE "C" & "C-L" CATCH BASIN

(UNDER 10' (3.04m) DEEP SHOWN)

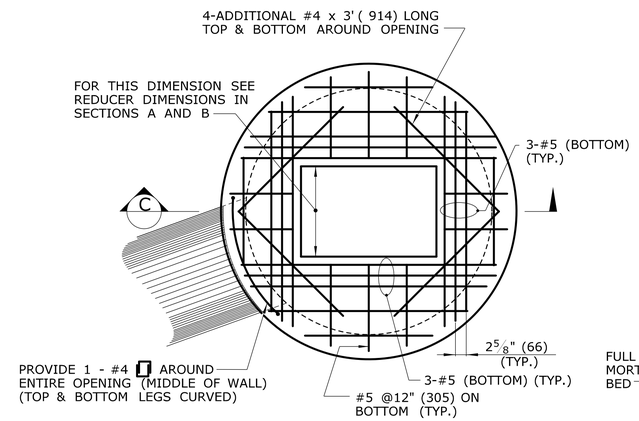

PLAN

(SEE NOTE 16)

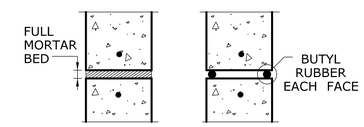

MORTAR JOINT DETAIL

BUTYL RUBBER JOINT DETAIL

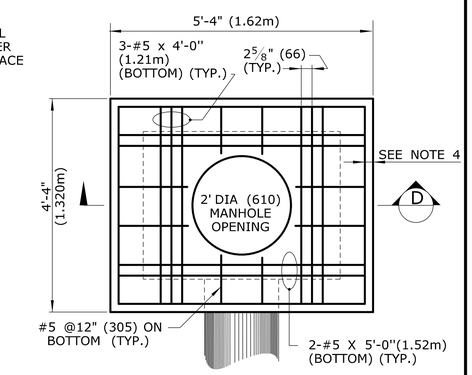

PLAN

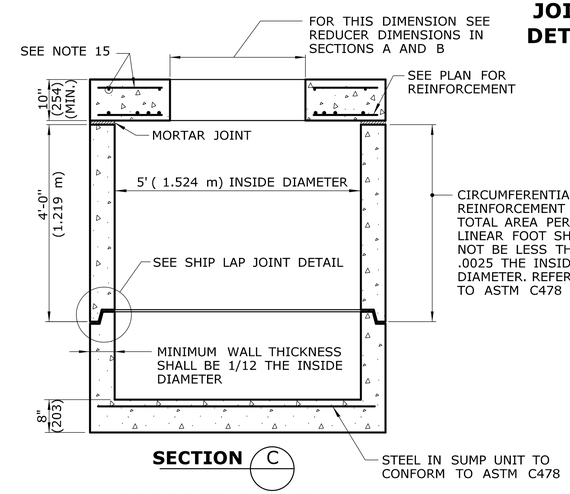

SECTION C

PRECAST CONCRETE TYPE "C" & "C-L" ROUND STRUCTURE

(SEE NOTE 9)

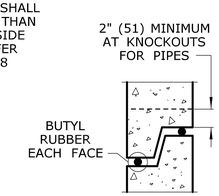

SHIP LAP JOINT DETAIL

(FOR USE WITH ROUND STRUCTURES ONLY)

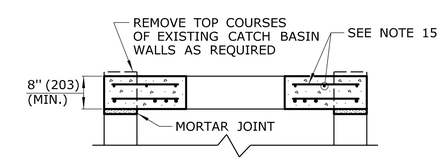

SECTION D

TOP SLAB TO CONVERT CATCH BASIN TO MANHOLE

ALL METRIC DIMENSIONS ARE IN MILLIMETERS (mm) UNLESS OTHERWISE NOTED

REV.	DATE	REVISION DESCRIPTION
-	-	-
-	-	-
-	-	-
-	-	-
2	10/24/11	CHANGE WORD KNOCKOUT TO OPENING & ADD SPACER NOTE
1	6/01/10	CHANGE NOTE 7 TO REFERENCE HW-507_08

THE INFORMATION, INCLUDING ESTIMATED QUANTITIES OF WORK, SHOWN ON THESE SHEETS IS BASED ON LIMITED INVESTIGATIONS BY THE STATE AND IS IN NO WAY WARRANTED TO INDICATE THE CONDITIONS OF ACTUAL QUANTITIES OF WORK WHICH WILL BE REQUIRED.

Plotted Date: 10/22/2011

NOT TO SCALE

STATE OF CONNECTICUT
DEPARTMENT OF TRANSPORTATION

Filename: working_revisions.dgn Model: 9-HW-507_04

SUBMITTED BY: NAME/DATE/TIME:

APPROVED BY: NAME/DATE/TIME:

CTDOT STANDARD SHEET

OFFICE OF ENGINEERING

STANDARD SHEET TITLE:

TYPE "C", "C-L" & ROUND PRECAST CONCRETE CB

STANDARD SHEET NO.:

HW-507_04

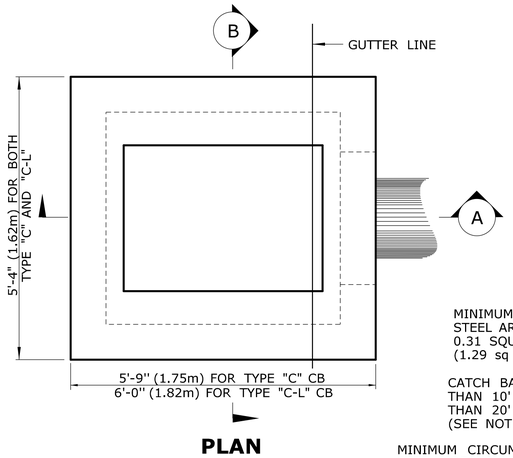

PLAN

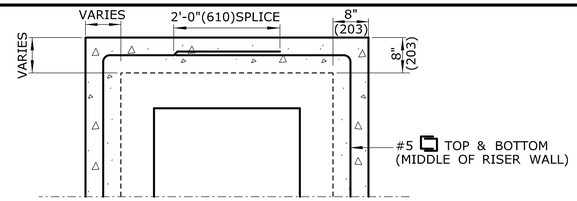

HALF REDUCER SECTION (TYP.)

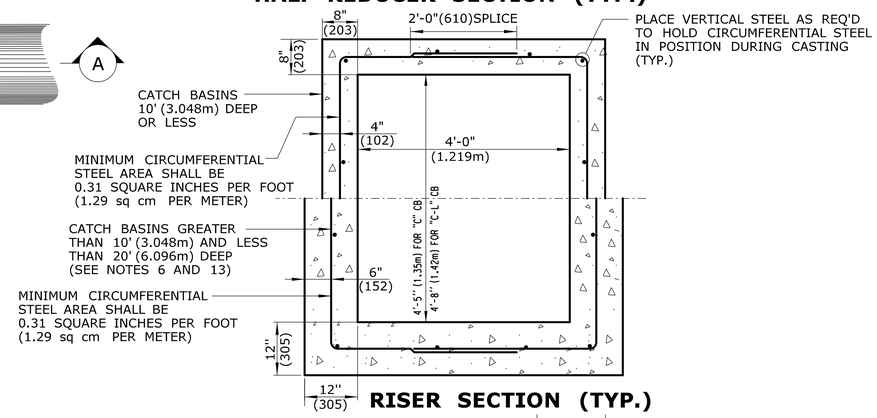

RISER SECTION (TYP.)

GENERAL NOTES:

1. REINFORCEMENT SHALL CONFORM TO ASTM A615, GRADE 60.
2. DETAILS ON THIS SHEET SHOW STANDARD REINFORCEMENT. WELDED WIRE FABRIC WITH AN AREA EQUAL TO OR GREATER THAN THE REINFORCING SHOWN MAY BE SUBSTITUTED.
3. ALL LAP SPLICES, DEVELOPMENT LENGTHS, BENDS FOR REINFORCEMENT, AND WELDED WIRE FABRIC SHALL CONFORM TO AASHTO STANDARD SPECIFICATIONS FOR HIGHWAY BRIDGES.
4. ALL REINFORCEMENT SHALL HAVE A MINIMUM CLEAR COVER OF 2" (51), EXCEPT FOR BENEATH BOTTOM REINFORCEMENT IN TOP SLABS, WHERE THE MINIMUM MAY BE 1½" (38).
5. MINIMUM CONCRETE COMPRESSIVE STRENGTH Fc' = 4000 PSI (27,580 kPa) SHALL BE OBTAINED PRIOR TO SHIPPING.
6. BASES AND RISERS AT A DEPTH OF 20' (6.096m) AND GREATER SHALL BE DESIGNED BY THE CONTRACTOR AND WORKING DRAWINGS SHALL BE SUBMITTED TO THE ENGINEER FOR REVIEW.
7. SEE STANDARD SHEET HW-507_08 FOR CATCH BASIN FRAMES AND GRATES.
8. FOR DOT MAINTENANCE PERSONNEL, RISERS MAY BE PREFABRICATED WITH PIPE OPENINGS IN ALL FOUR WALLS. ADEQUATE REINFORCING AROUND PIPE OPENINGS CONFORMING TO THESE PLANS SHALL BE PROVIDED. ANY RISERS USED WHERE A PIPE OPENING IS TO REMAIN IN PLACE, MUST BE FORMED UP WITH BRICK AS DIRECTED BY THE ENGINEER.
9. RISERS SHALL NEVER HAVE CORNER PIPE ENTRIES. WHERE THE ALIGNMENT OF THE PIPE WITH RESPECT TO THE CORNER OF THE CATCH BASIN CANNOT BE CHANGED, A ROUND STRUCTURE CONFORMING TO ASTM C478 SHALL BE USED. REINFORCING FOR THE ROUND TOP SLAB WITH A RECTANGULAR OPENING SHALL CONFORM TO DETAILS SHOWN HERE.
10. ALL PIPE OPENINGS SHALL BE CLOSED USING MATERIALS WHICH CONFORM TO STATE OF CONNECTICUT STANDARD SPECIFICATIONS SECTION M.08.02. IF THE ENGINEER DETERMINES THAT THE CLOSURE OF ANY PIPE OPENING IS UNSATISFACTORY, THE CONTRACTOR SHALL RECLOSE SAID OPENING AT NO ADDITIONAL COST TO THE STATE. OPENING FOR PIPE SHALL NOT RESULT IN A REDUCED WALL THICKNESS.
11. THE LATEST STATE OF CONNECTICUT STANDARD SPECIFICATIONS AND SUPPLEMENTALS SHALL GOVERN.
12. FOR ADDITIONAL DETAILS, SEE OTHER CATCH BASIN SHEETS.
13. WALL THICKNESS OF ALL CB'S OVER 10' (3.048m) DEEP SHALL BE INCREASED TO 12"(305) THICK. INSIDE DIMENSION SHALL REMAIN THE SAME. (THE 12" (305) THICKNESS WILL START AFTER THE FIRST 10' (3.048m).)
14. BUTYL RUBBER JOINT SEAL SHALL CONFORM TO AASHTO M-198 AND MORTAR SHALL CONFORM TO THE LATEST STATE OF CONNECTICUT STANDARD SPECIFICATIONS MATERIAL SECTION M11.04.

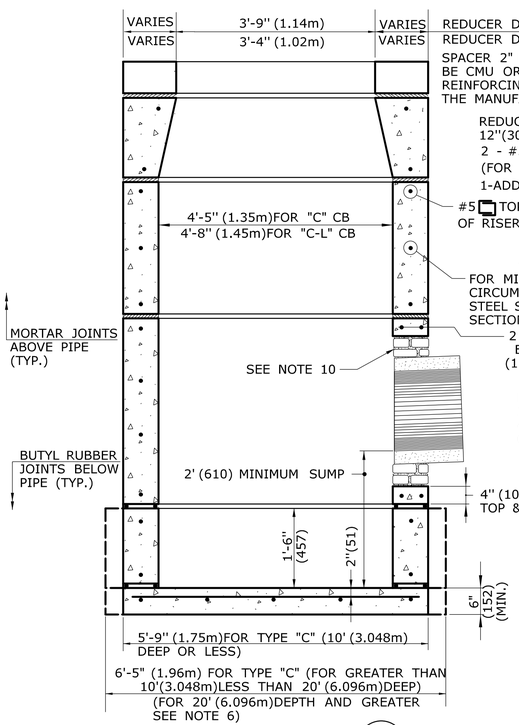

SECTION A

NOTE: REINFORCEMENT IN FAR FACE WALL NOT SHOWN FOR CLARITY

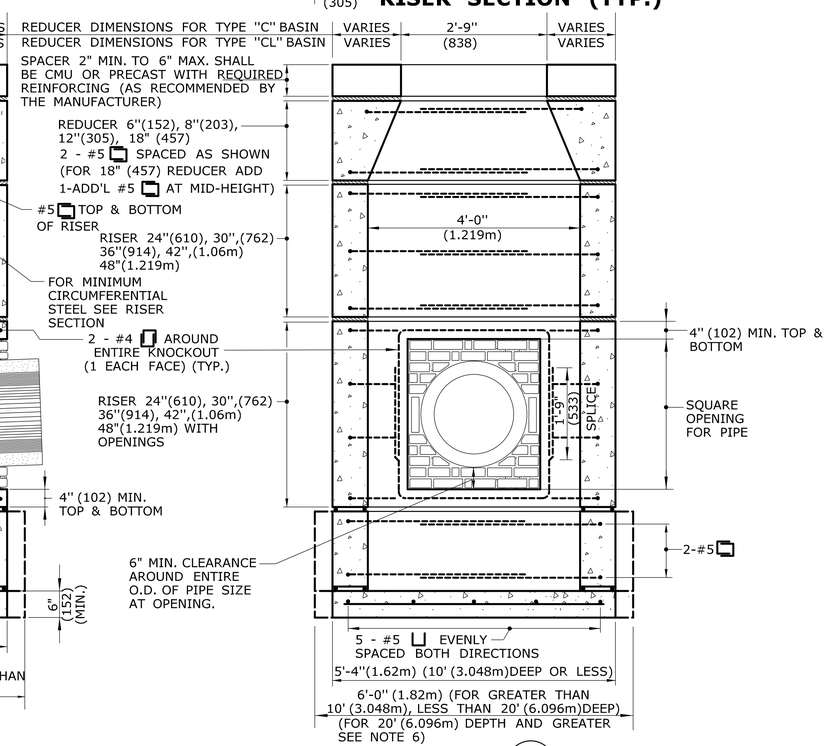

SECTION B

PRECAST CONCRETE TYPE "C" & "C-L" DOUBLE GRATE TYPE I CATCH BASIN

(UNDER 10' (3.048m) DEEP SHOWN)

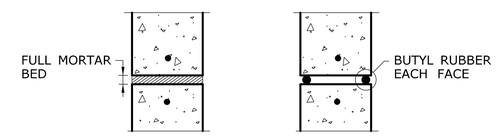

MORTAR JOINT DETAIL **BUTYL RUBBER JOINT DETAIL**

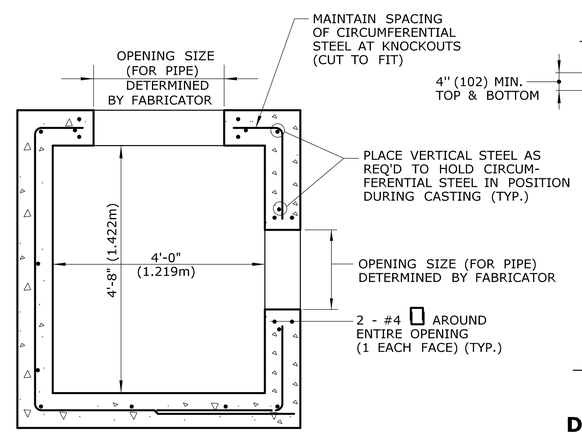

TYPICAL SECTION THRU SINGLE RISER WITH OPENING

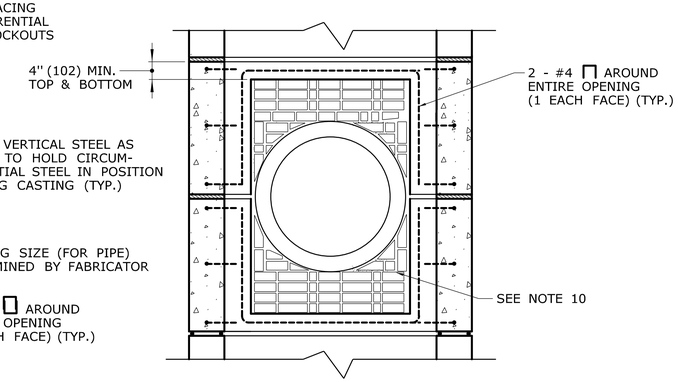

DOUBLE RISER OPENING (TYP.) PIPES GREATER THAN 24" (610) O.D.

ALL METRIC DIMENSIONS ARE IN MILLIMETERS (mm) UNLESS OTHERWISE NOTED

REV.	DATE	REVISION DESCRIPTION
-	-	-
-	-	-
-	-	-
-	-	-
2	10/24/11	CHANGE WORD KNOCKOUT TO OPENING & ADD SPACER NOTE
1	6/01/10	CHANGE NOTE 7 TO REFERENCE HW-507_08

THE INFORMATION, INCLUDING ESTIMATED QUANTITIES OF WORK, SHOWN ON THESE SHEETS IS BASED ON LIMITED INVESTIGATIONS BY THE STATE AND IS IN NO WAY WARRANTED TO INDICATE THE CONDITIONS OF ACTUAL QUANTITIES OF WORK WHICH WILL BE REQUIRED.

Plotted Date: 10/22/2011

NOT TO SCALE

STATE OF CONNECTICUT
DEPARTMENT OF TRANSPORTATION

Filename: working_revisions.dgn Model: 10-HW-507_05

SUBMITTED BY: NAME/DATE/TIME:

APPROVED BY: NAME/DATE/TIME:

CTDOT STANDARD SHEET

OFFICE OF ENGINEERING

STANDARD SHEET TITLE:

TYPE "C" & "C-L" PRECAST CONCRETE CB DOUBLE GRATE TYPE-I

STANDARD SHEET NO.:

HW-507_05

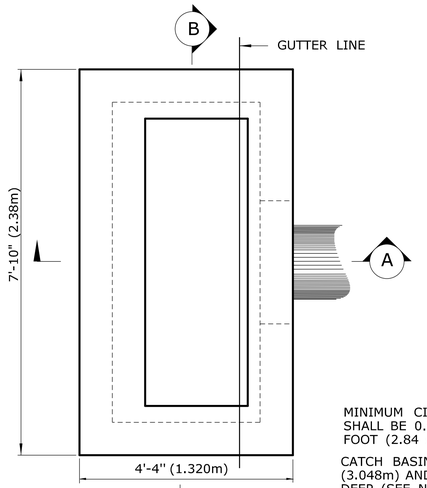

PLAN

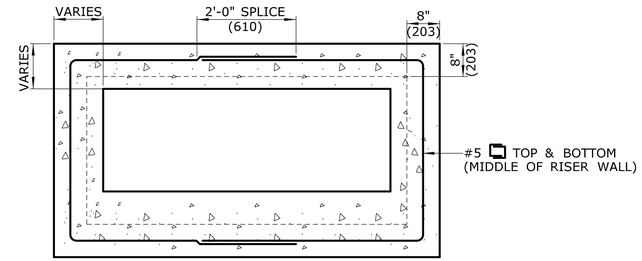

REDUCER SECTION (TYP.)

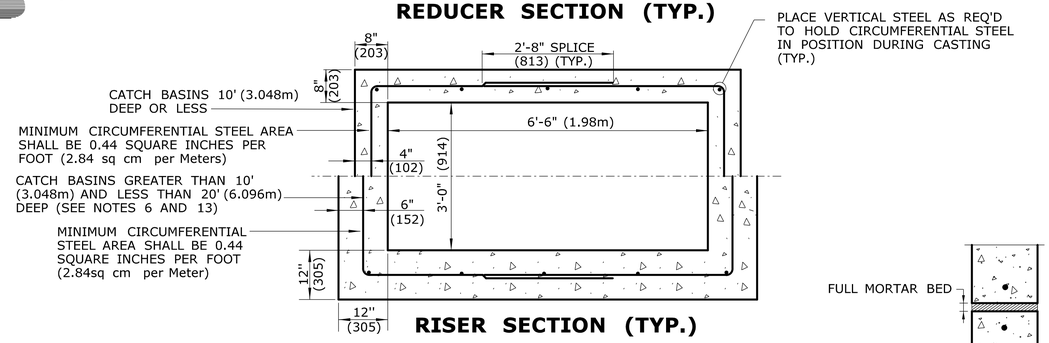

RISER SECTION (TYP.)

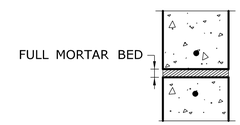

MORTAR JOINT DETAIL

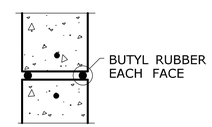

BUTYL RUBBER JOINT DETAIL

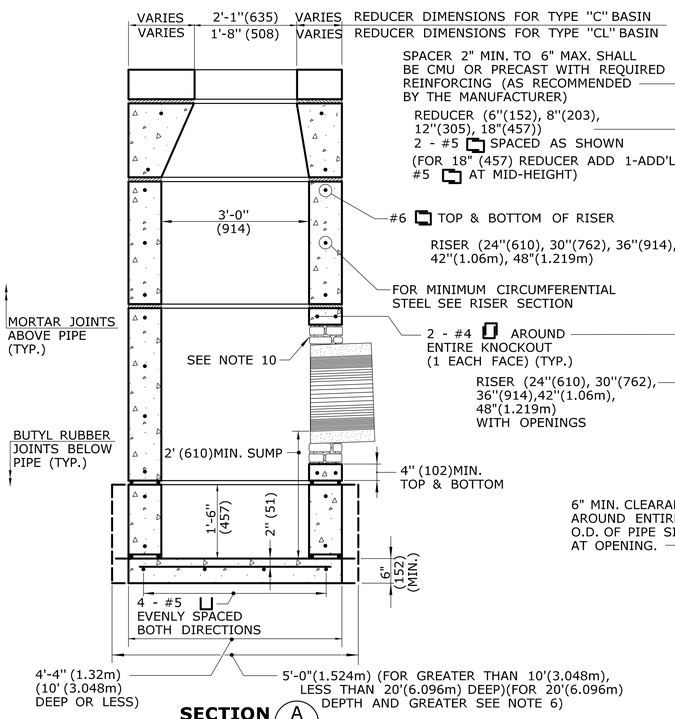

SECTION A

NOTE: REINFORCEMENT IN FAR FACE
WALL NOT SHOWN FOR CLARITY

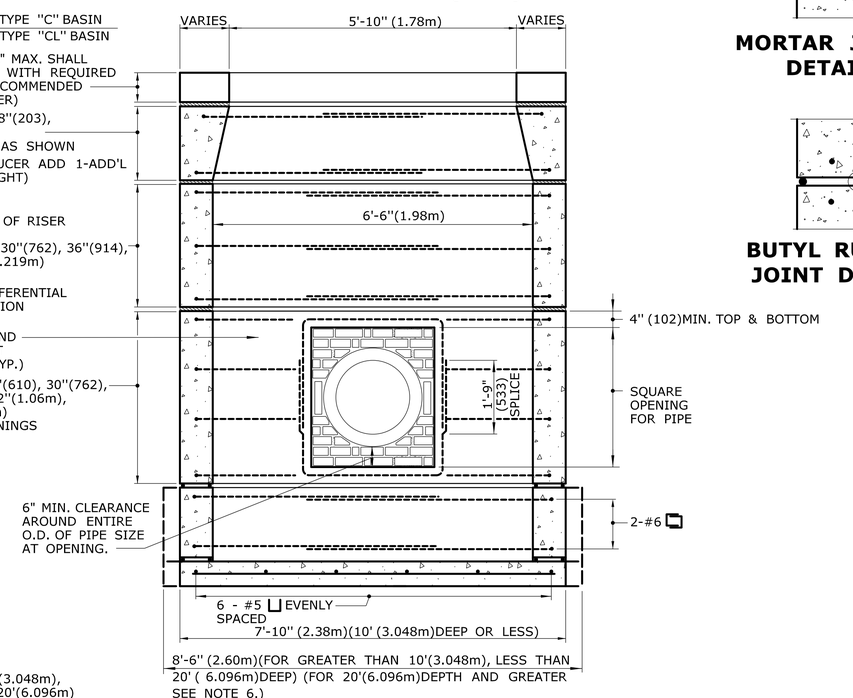

SECTION B

PRECAST CONCRETE TYPE "C" & "C-L" DOUBLE GRATE TYPE II CATCH BASIN

(UNDER 10' (3.048m) DEEP SHOWN)

GENERAL NOTES:

1. REINFORCEMENT SHALL CONFORM TO ASTM A615, GRADE 60.
2. DETAILS ON THIS SHEET SHOW STANDARD REINFORCEMENT. WELDED WIRE FABRIC WITH AN AREA EQUAL TO OR GREATER THAN THE REINFORCING SHOWN MAY BE SUBSTITUTED.
3. ALL LAP SPLICES, DEVELOPMENT LENGTHS, BENDS FOR REINFORCEMENT, AND WELDED WIRE FABRIC SHALL CONFORM TO AASHTO STANDARD SPECIFICATIONS FOR HIGHWAY BRIDGES.
4. ALL REINFORCEMENT SHALL HAVE A MINIMUM CLEAR COVER OF 2"(51), EXCEPT FOR BENEATH BOTTOM REINFORCEMENT IN TOP SLABS, WHERE THE MINIMUM MAY BE $1\frac{1}{2}$"(38).
5. MINIMUM CONCRETE COMPRESSIVE STRENGTH Fc' = 4000 PSI (27.580 kPa) SHALL BE OBTAINED PRIOR TO SHIPPING.
6. BASES AND RISERS AT A DEPTH OF 20' (6.096m) AND GREATER SHALL BE DESIGNED BY THE CONTRACTOR AND WORKING DRAWINGS SHALL BE SUBMITTED TO THE ENGINEER FOR REVIEW.
7. SEE STANDARD SHEET HW-507_08 FOR CATCH BASIN FRAMES AND GRATES.
8. FOR DOT MAINTENANCE PERSONNEL, RISERS MAY BE PREFABRICATED WITH PIPE OPENINGS IN ALL FOUR WALLS. ADEQUATE REINFORCING AROUND PIPE OPENINGS CONFORMING TO THESE PLANS SHALL BE PROVIDED. ANY RISERS USED WHERE A PIPE OPENING IS TO REMAIN IN PLACE, MUST BE FORMED UP WITH BRICK AS DIRECTED BY THE ENGINEER.
9. RISERS SHALL NEVER HAVE CORNER PIPE ENTRIES. WHERE THE ALIGNMENT OF THE PIPE WITH RESPECT TO THE CORNER OF THE CATCH BASIN CANNOT BE CHANGED, A ROUND STRUCTURE CONFORMING TO ASTM C478 SHALL BE USED. REINFORCING FOR THE ROUND TOP SLAB WITH A RECTANGULAR OPENING SHALL CONFORM TO DETAILS SHOWN HERE.
10. ALL PIPE OPENINGS SHALL BE CLOSED USING MATERIALS WHICH CONFORM TO STATE OF CONNECTICUT STANDARD SPECIFICATIONS SECTION M.08.02. IF THE ENGINEER DETERMINES THAT THE CLOSURE OF ANY PIPE OPENING IS UNSATISFACTORY, THE CONTRACTOR SHALL RECLOSE SAID OPENING AT NO ADDITIONAL COST TO THE STATE. OPENINGS FOR PIPE SHALL NOT RESULT IN A REDUCED WALL THICKNESS.
11. THE LATEST STATE OF CONNECTICUT STANDARD SPECIFICATIONS AND SUPPLEMENTALS SHALL GOVERN.
12. FOR ADDITIONAL DETAILS, SEE OTHER CATCH BASIN SHEETS.
13. WALL THICKNESS OF ALL CB'S OVER 10' (3.048m) DEEP SHALL BE INCREASED TO 12" (305) THICK. INSIDE DIMENSION SHALL REMAIN THE SAME. (THE 12" (305) THICKNESS WILL START AFTER THE FIRST 10' (3.048m).)
14. BUTYL RUBBER JOINT SEAL SHALL CONFORM TO AASHTO M-198 AND MORTAR SHALL CONFORM TO THE LATEST STATE OF CONNECTICUT STANDARD SPECIFICATIONS MATERIAL SECTION M11.04.

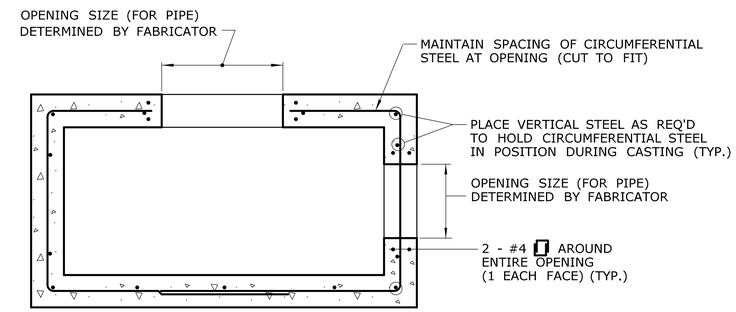

TYPICAL SECTION THRU SINGLE RISER WITH OPENINGS

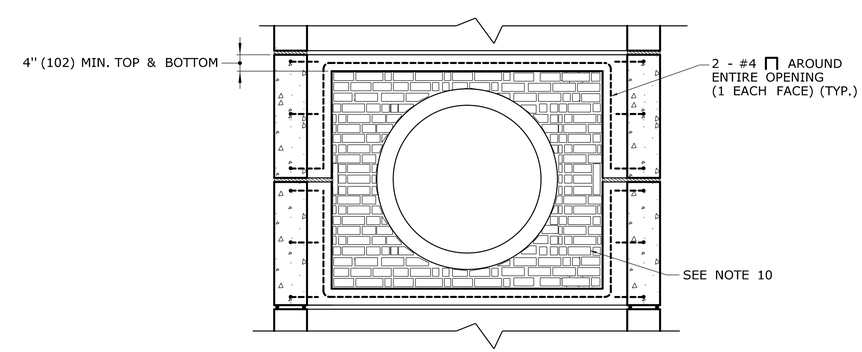

DOUBLE RISER OPENING (TYP.)
PIPES GREATER THAN 24" (610) O.D.

ALL METRIC DIMENSIONS ARE IN MILLIMETERS (mm) UNLESS OTHERWISE NOTED

REV.	DATE	REVISION DESCRIPTION
-	-	-
-	-	-
-	-	-
-	-	-
2	10/24/11	CHANGE WORD KNOCKOUT TO OPENING & ADD SPACER NOTE
1	6/01/10	CHANGE NOTE 7 TO REFERENCE HW-507_08

THE INFORMATION, INCLUDING ESTIMATED QUANTITIES OF WORK, SHOWN ON THESE SHEETS IS BASED ON LIMITED INVESTIGATIONS BY THE STATE AND IS IN NO WAY WARRANTED TO INDICATE THE CONDITIONS OF ACTUAL QUANTITIES OF WORK WHICH WILL BE REQUIRED.

Plotted Date: 10/22/2011

NOT TO SCALE

STATE OF CONNECTICUT
DEPARTMENT OF TRANSPORTATION

Filename: working_revisions.dgn Model: 11-HW-507_06

SUBMITTED BY: NAME/DATE/TIME:

APPROVED BY: NAME/DATE/TIME:

CTDOT STANDARD SHEET

OFFICE OF ENGINEERING

STANDARD SHEET TITLE:

TYPE "C" & "C-L" PRECAST CONCRETE CB DOUBLE GRATE TYPE-II

STANDARD SHEET NO.:

HW-507_06

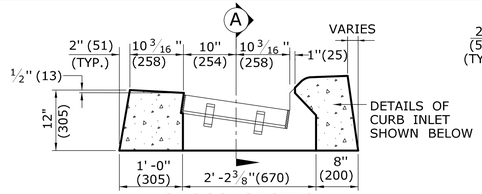

CROSS SECTION

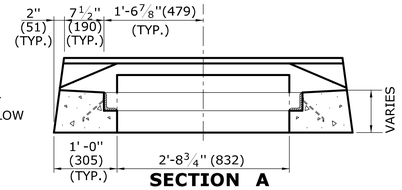

SECTION A

TYPE "C" CATCH BASIN TOP

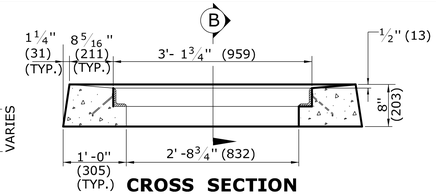

CROSS SECTION

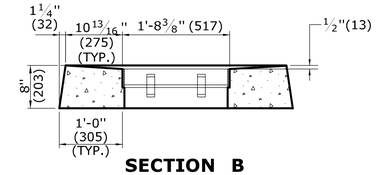

SECTION B

TYPE "C-L" CATCH BASIN TOP

GENERAL NOTES:

1. FOR DETAILS OF FRAME AND GRATE SEE STANDARD SHEET HW-507_08.
2. ALL STEEL, EXCEPT REINFORCING BARS, SHALL BE GALVANIZED IN CONFORMANCE WITH SECTION M06.03 OF CONNECTICUT'S STANDARD SPECIFICATIONS.
3. ALL BARS SHALL HAVE A MINIMUM 2" (51) COVER.

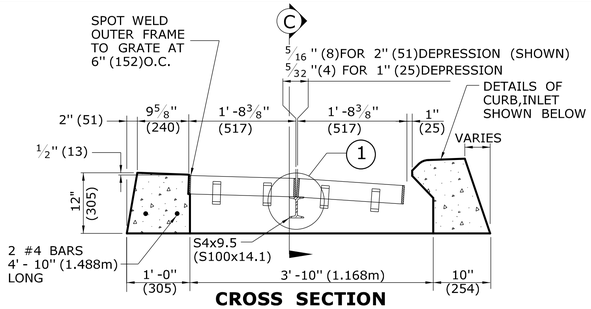

CROSS SECTION

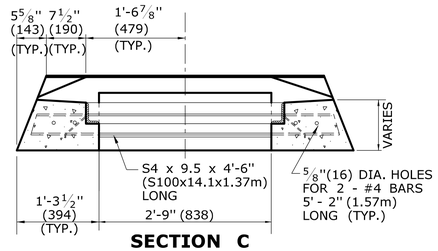

SECTION C

TYPE "C" CATCH BASIN DOUBLE GRATE - TYPE I TOP

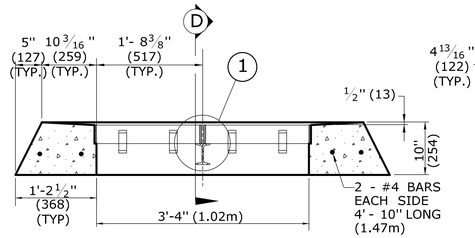

CROSS SECTION

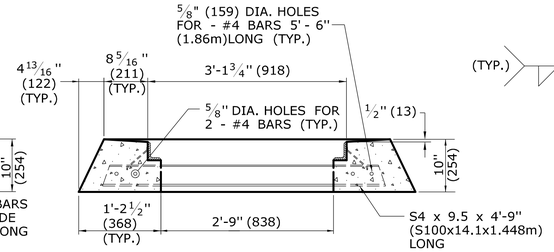

SECTION D

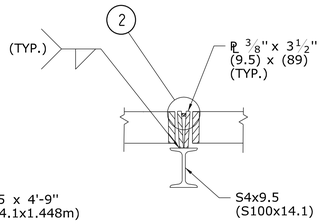

DETAIL "1"

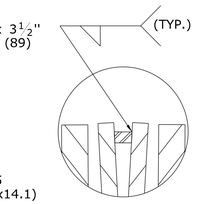

DETAIL "2"

TYPE "C-L" CATCH BASIN DOUBLE GRATE - TYPE I TOP

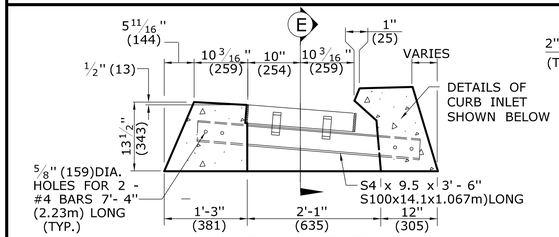

CROSS SECTION

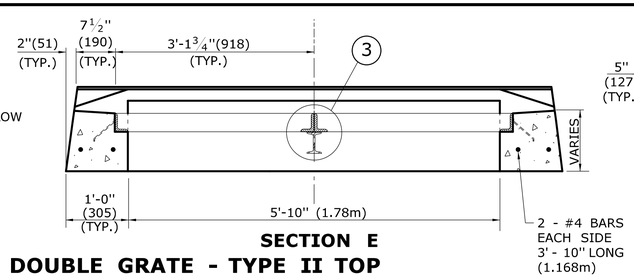

SECTION E

TYPE "C" CATCH BASIN DOUBLE GRATE - TYPE II TOP

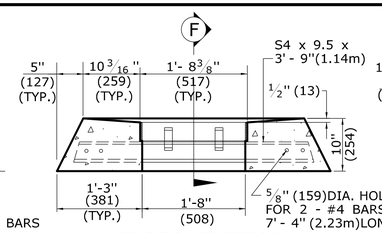

CROSS SECTION

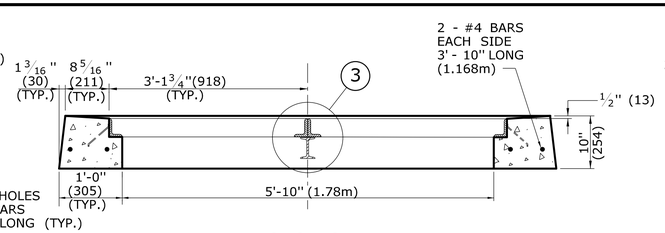

SECTION F

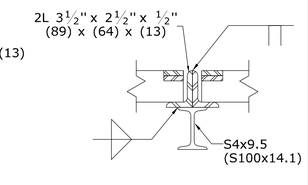

DETAIL "3"

TYPE "C-L" CATCH BASIN DOUBLE GRATE - TYPE II TOP

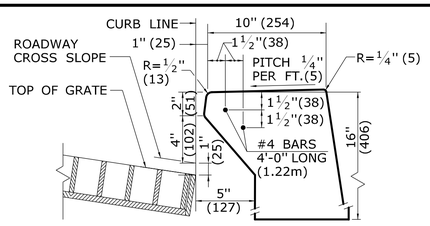

INLET WITH 6" (152) CONCRETE OR STONE CURBING FOR TYPE "C" CB

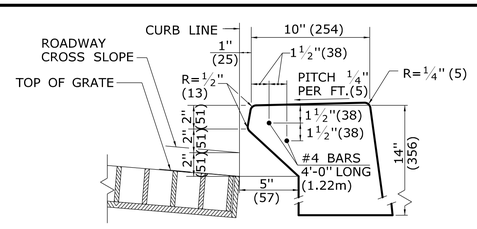

INLET WITH NO CURBING (PLAIN TYPE) FOR TYPE "C" CB

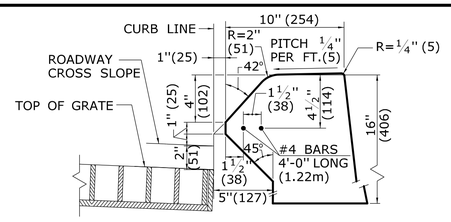

INLET WITH 6" (152) BITUMINOUS CONCRETE LIP CURBING FOR TYPE "C" CB

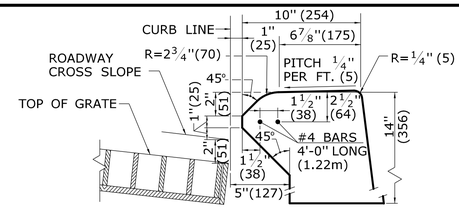

INLET WITH 4" (102) CONCRETE PARK CURBING FOR TYPE "C" CB

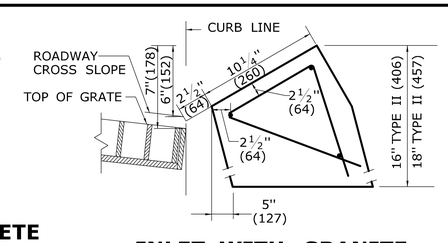

INLET WITH GRANITE SLOPE CURB FOR TYPE "C" CB

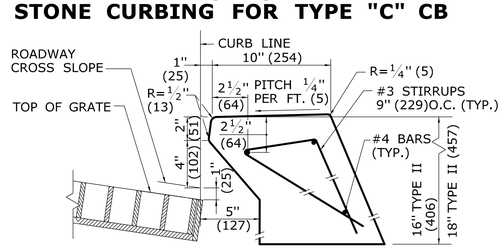

INLET WITH 6" (152) CONCRETE OR STONE CURBING FOR TYPE "C" CB DOUBLE GRATE TYPE I & II

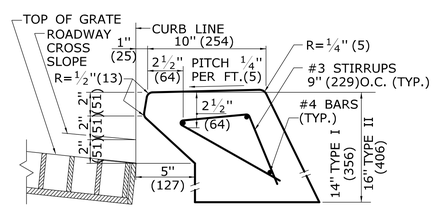

INLET WITH NO CURBING (PLAIN TYPE) FOR TYPE "C" CB DOUBLE GRATE TYPE I & II

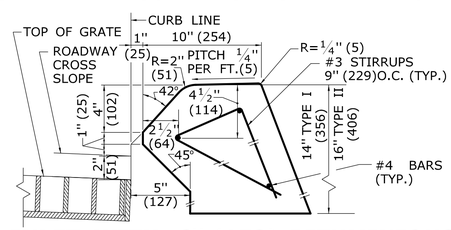

INLET WITH 6" (152) BITUMINIOUS CONCRETE LIP CURBING FOR TYPE "C" CB DOUBLE GRATE TYPE I & II

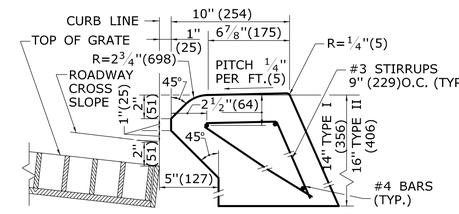

INLET WITH 4" (102) CONCRETE PARK CURBING FOR TYPE "C" CB DOUBLE GRATE TYPE I & II

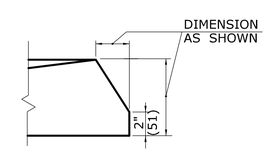

ALTERNATE CONSTRUCTION OF TYPE II TOP

ALL METRIC DIMENSIONS ARE IN MILLIMETERS (mm) UNLESS OTHERWISE NOTED

REV.	DATE	REVISION DESCRIPTION
-	-	-
-	-	-
-	-	-
-	-	-
2	7/28/11	REMOVE MIN. DROP NOTE
1	6/01/10	REVISE CALL-OUT

THE INFORMATION, INCLUDING ESTIMATED QUANTITIES OF WORK, SHOWN ON THESE SHEETS IS BASED ON LIMITED INVESTIGATIONS BY THE STATE AND IS IN NO WAY WARRANTED TO INDICATE THE CONDITIONS OF ACTUAL QUANTITIES OF WORK WHICH WILL BE REQUIRED.

Plotted Date: 11/10/2011

NOT TO SCALE

STATE OF CONNECTICUT
DEPARTMENT OF TRANSPORTATION

Filename: CTDOT_HWY_STD_Nov2011.dgn Model: 12-HW-507_07

SUBMITTED BY: NAME/DATE/TIME:

APPROVED BY: NAME/DATE/TIME:

CTDOT STANDARD SHEET

OFFICE OF ENGINEERING

STANDARD SHEET TITLE:

TYPE "C" & "C-L" CATCH BASIN TOPS AND CURBS

STANDARD SHEET NO.:

HW-507_07

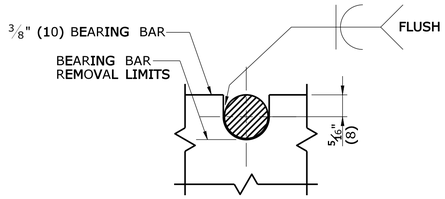

NOTE:
5/8" (16) DIA. ROUND BAR SHALL CONTACT BEARING BAR AT BOTTOM AND BE FLUSH AT TOP.

ROUND BAR ATTACHMENT
CATCH BASIN GRATE TYPE A

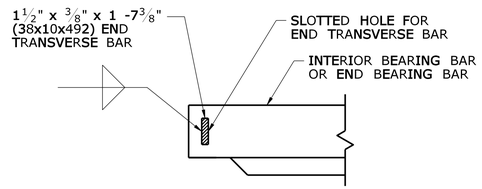

END TRANSVERSE BAR ATTACHMENT
CATCH BASIN GRATE TYPE A & B

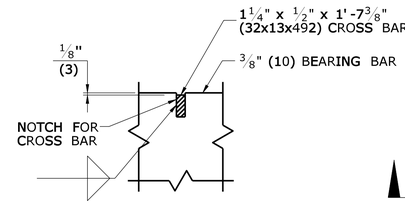

CROSS BAR ATTACHMENT
CATCH BASIN GRATE TYPE B

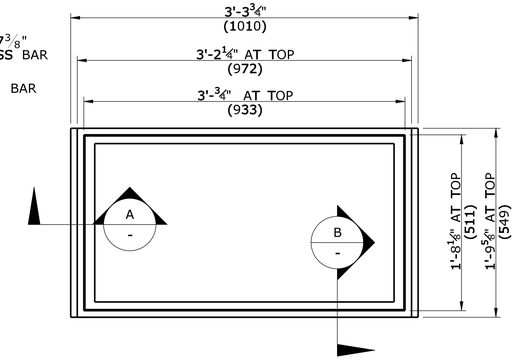

PLAN

GENERAL NOTES:

1. STEEL OR CAST IRON SHALL BE USED FOR FRAMES. STEEL SHALL BE USED FOR TYPE "A" & "B" GRATES.
2. TYPE "A" GRATES SHALL BE USED ON ALL ROADWAYS WHERE BICYCLE TRAFFIC IS ALLOWED OR AS DIRECTED BY THE ENGINEER.
3. TYPE "B" GRATES SHALL BE USED ON ALL LIMITED ACCESS HIGHWAYS, RAMPS AND WHERE BICYCLE TRAFFIC IS NOT ALLOWED OR AS DIRECTED BY THE ENGINEER.
4. STEEL FRAMES AND GRATES SHALL BE GALVANIZED IN ACCORDANCE WITH ARTICLE M.06.03.
5. DO NOT GALVANIZE CAST IRON FRAMES.
6. DIMENSIONAL TOLERANCES SHALL BE ±1/16".(1.6)
7. ALL STEEL BARS SHALL BE WELDED AT ALL INTERSECTIONS.
8. ALL WELDING SHALL CONFORM TO THE REQUIREMENTS OF AWS STRUCTURAL WELDING CODE, D1.1.

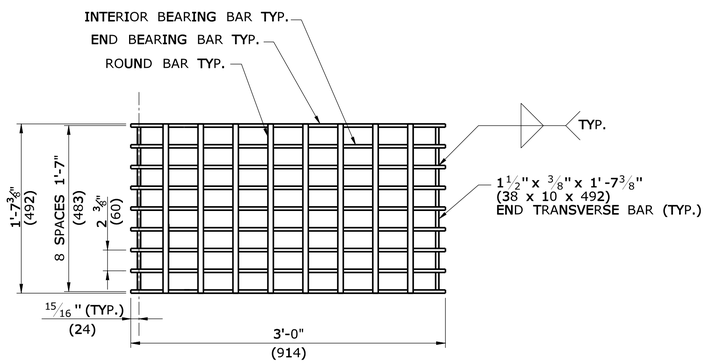

PLAN

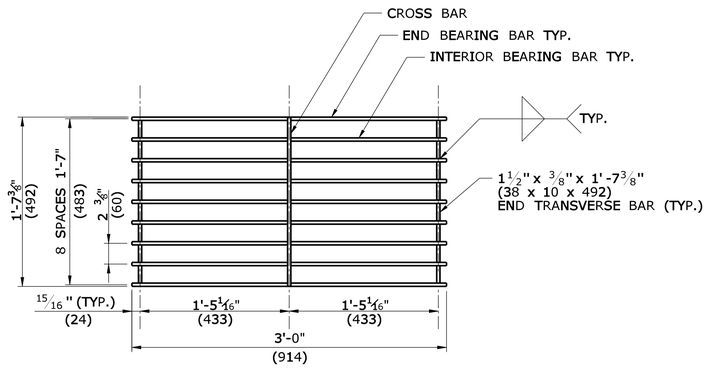

PLAN

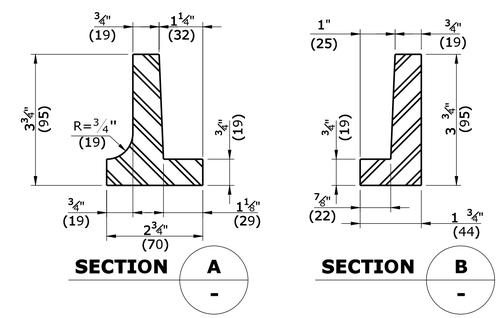

CAST IRON FRAME ALTERNATE

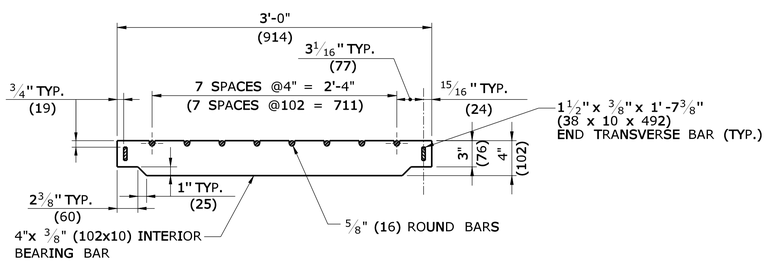

ELEVATION- INTERIOR BEARING BAR

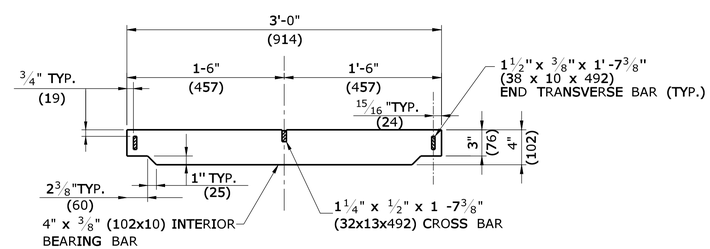

ELEVATION- INTERIOR BEARING BAR

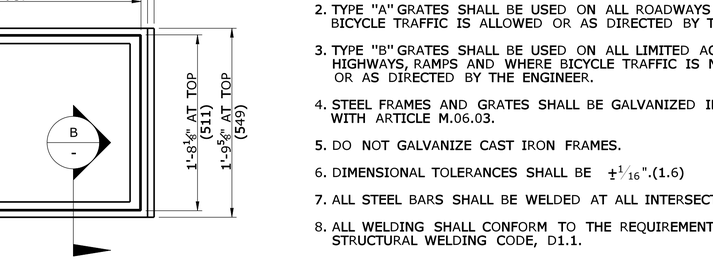

PLAN

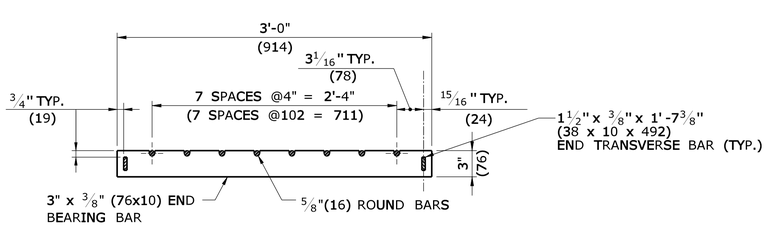

ELEVATION- END BEARING BAR
CATCH BASIN GRATE TYPE A

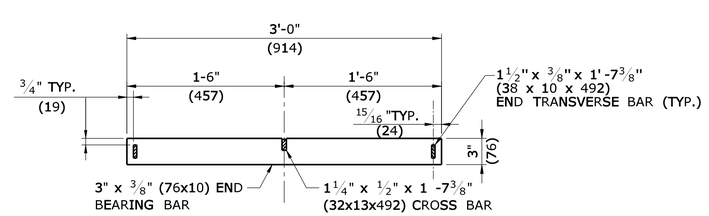

ELEVATION- END BEARING BAR
CATCH BASIN GRATE TYPE B

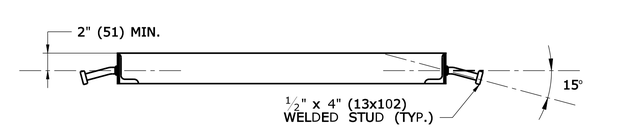

WELDED STUD ANCHOR DETAILS
STEEL FRAME

ALL METRIC DIMENSIONS ARE IN MILLIMETERS (mm) UNLESS OTHERWISE NOTED

REV.	DATE	REVISION DESCRIPTION
-	-	-
-	-	-
-	-	-
-	-	-
-	-	-
-	-	-

THE INFORMATION, INCLUDING ESTIMATED QUANTITIES OF WORK, SHOWN ON THESE SHEETS IS BASED ON LIMITED INVESTIGATIONS BY THE STATE AND IS IN NO WAY WARRANTED TO INDICATE THE CONDITIONS OF ACTUAL QUANTITIES OF WORK WHICH WILL BE REQUIRED.

Plotted Date: 9/11/2009

NOT TO SCALE

STATE OF CONNECTICUT
DEPARTMENT OF TRANSPORTATION

Filename: CTDOT_HIGHWAY_STD.dgn Model: HW-507_08

SUBMITTED BY: NAME/DATE/TIME:
APPROVED BY: NAME/DATE/TIME:

CTDOT STANDARD SHEET
OFFICE OF ENGINEERING

STANDARD SHEET TITLE:
CATCH BASIN FRAMES AND GRATES

STANDARD SHEET NO.:
HW-507_08

GENERAL NOTES:

1. LOCK DOWN DEVICES SHALL BE INSTALLED AND MAINTAINED WHEN TRAFFIC WILL BE TRAVELING OVER CATCH BASIN GRATES OR AS ORDERED.
2. BOLTS FOR LOCK DOWN DEVICES SHALL BE STAINLESS STEEL CONFORMING TO THE REQUIREMENTS OF ASTM A193, CLASS 2:B8 (TYPE 304).
3. WASHERS SHALL BE STAINLESS STEEL CONFORMING TO THE REQUIREMENTS OF A167, TYPE 302.
4. STEEL FOR THE LOCK DOWN DEVICES AND THE FRAME SHALL CONFORM TO ASTM A36 AND SHALL BE GALVANIZED AFTER FABRICATION IN ACCORDANCE WITH ASTM A123.
5. FOR ADDITIONAL DETAILS OF THE FRAME AND GRATE SEE STANDARD SHEET HW-507_08. NOTE THAT THE GRATE MUST BE MODIFIED TO FIT INSIDE THE FRAME.
6. 4" (102) BITUMINOUS CONCRETE PARK CURBING SHOWN FOR THE "C" TOP.

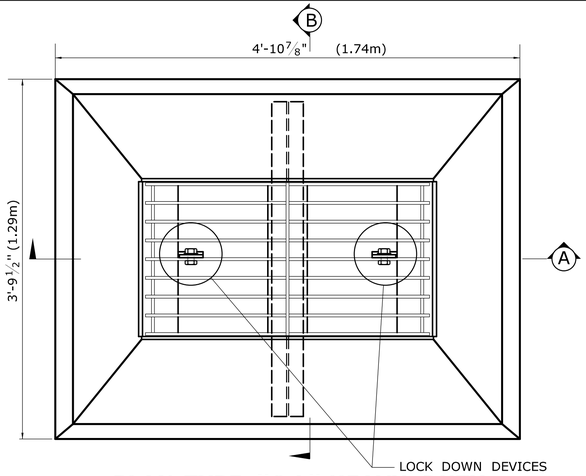

PLAN-TYPE "C-L" HEAVY DUTY CATCH BASIN TOP

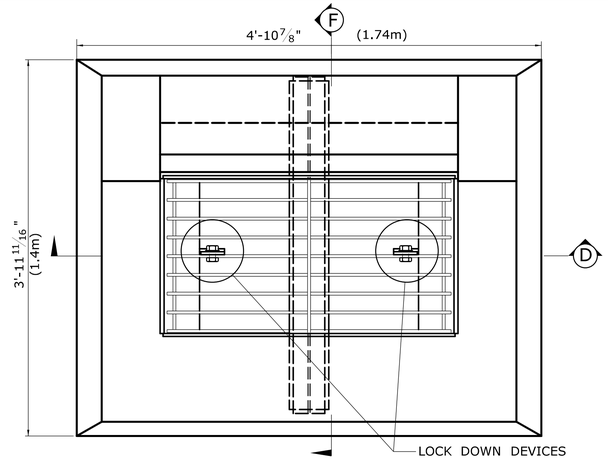

PLAN-TYPE "C" HEAVY DUTY CATCH BASIN TOP

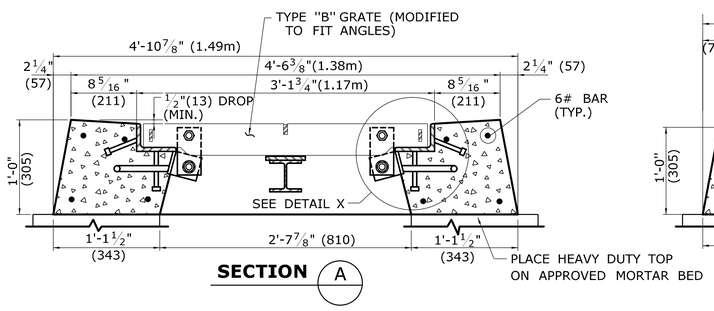

SECTION A

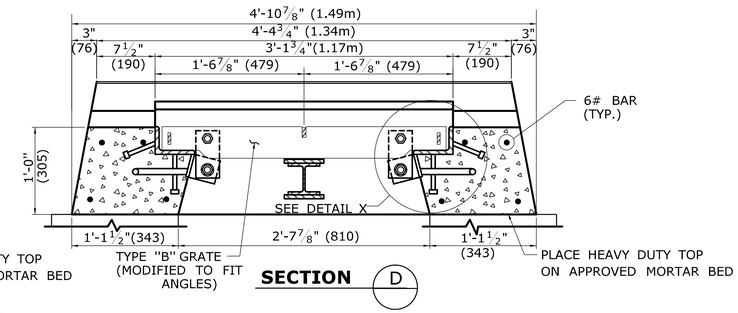

SECTION D

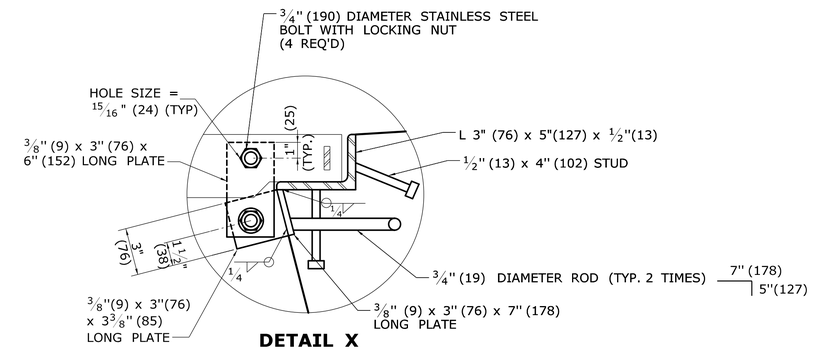

DETAIL X

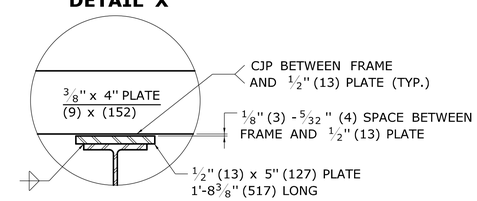

DETAIL Y

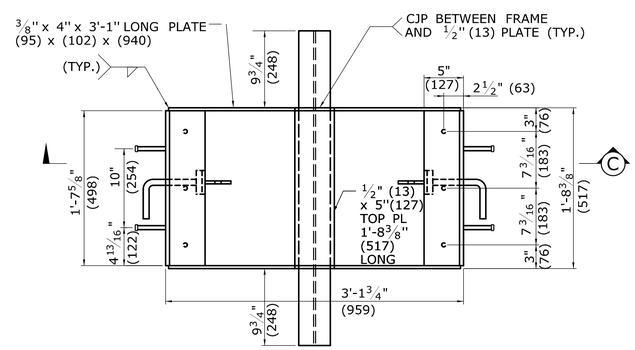

PLAN - TYPE "C-L" FRAME

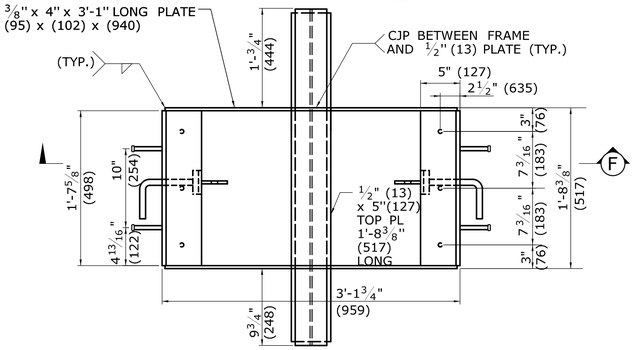

PLAN - TYPE "C" FRAME

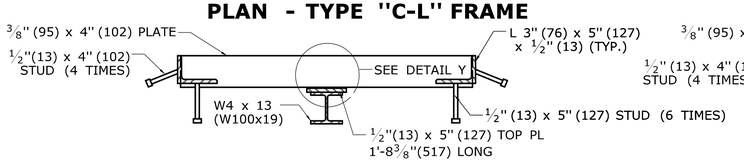

SECTION C

TYPE "C-L" HEAVY DUTY CATCH BASIN FRAME

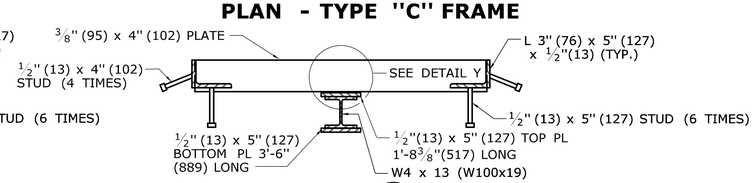

SECTION F

TYPE "C" HEAVY DUTY CATCH BASIN FRAME

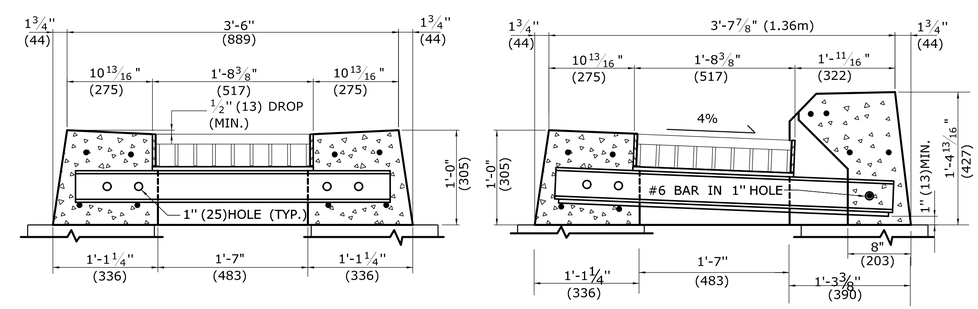

SECTION B

ALL METRIC DIMENSIONS ARE IN MILLIMETERS (mm) UNLESS OTHERWISE NOTED

REV.	DATE	REVISION DESCRIPTION
-	-	-
-	-	-
-	-	-
-	-	-
-	-	-
1	6/01/10	REVISED NOTE 5.

THE INFORMATION, INCLUDING ESTIMATED QUANTITIES OF WORK, SHOWN ON THESE SHEETS IS BASED ON LIMITED INVESTIGATIONS BY THE STATE AND IS IN NO WAY WARRANTED TO INDICATE THE CONDITIONS OF ACTUAL QUANTITIES OF WORK WHICH WILL BE REQUIRED.

Plotted Date: 6/23/2011

NOT TO SCALE

STATE OF CONNECTICUT
DEPARTMENT OF TRANSPORTATION

Filename: CTDOT_HIGHWAY_STD_JUNE2011.dgn Model: 14 - HW-507_09

SUBMITTED BY: NAME/DATE/TIME:

APPROVED BY: NAME/DATE/TIME:

CTDOT STANDARD SHEET

OFFICE OF ENGINEERING

STANDARD SHEET TITLE:

HEAVY DUTY LOCK DOWN TOPS

STANDARD SHEET NO.:

HW-507_09

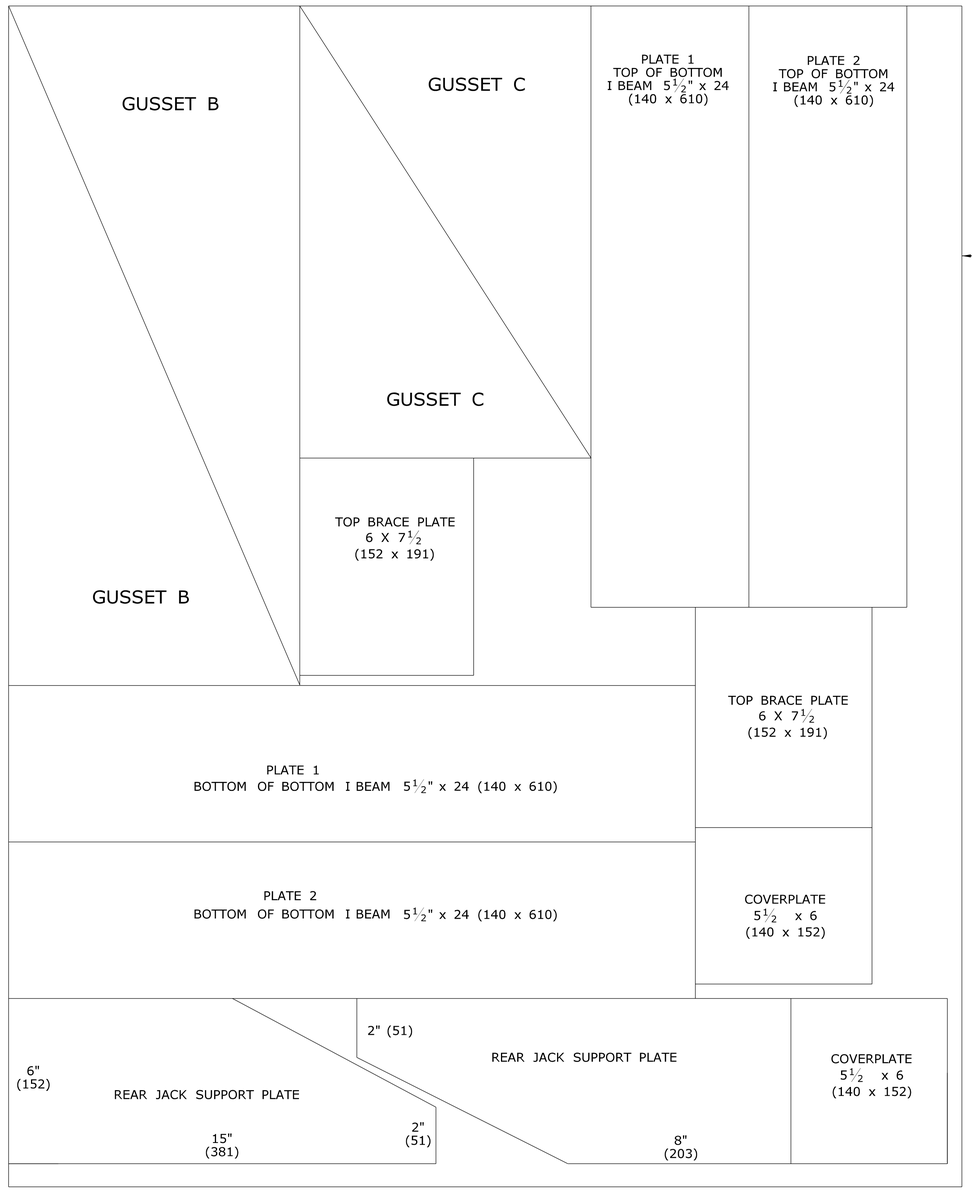

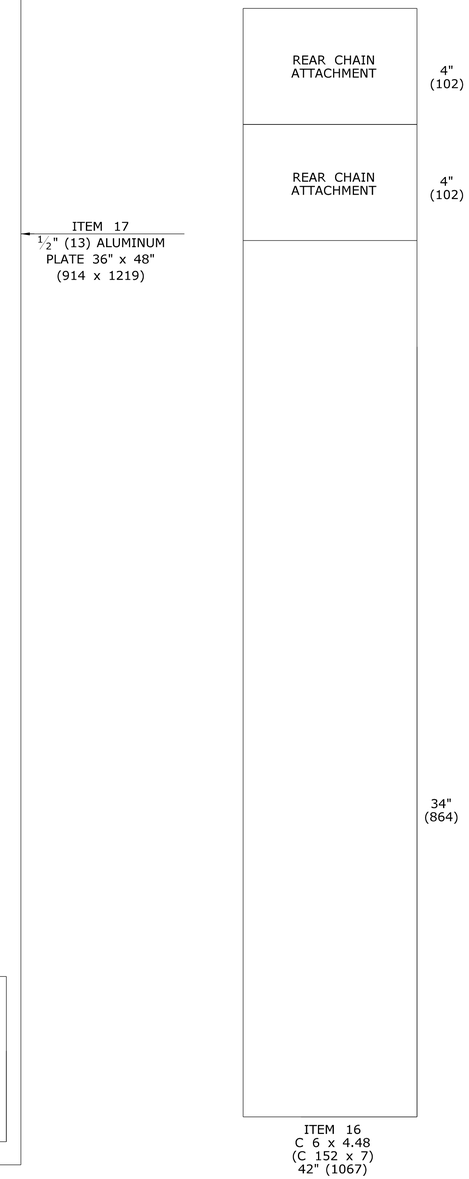

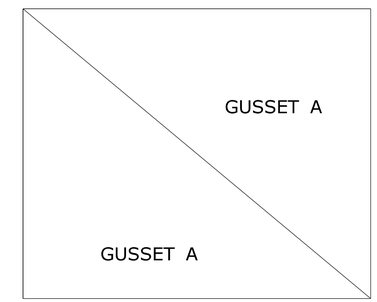

ITEM 19
1" (25) ALUMINUM PLATE
10" x 12" (254 x 305)

CUTTING PATTERN

ALL METRIC DIMENSIONS ARE IN MILLIMETERS (mm) UNLESS OTHERWISE NOTED.

REV.	DATE	REVISION DESCRIPTION
-	-	-
-	-	-
-	-	-
-	-	-
-	-	-
-	-	-

THE INFORMATION, INCLUDING ESTIMATED QUANTITIES OF WORK, SHOWN ON THESE SHEETS IS BASED ON LIMITED INVESTIGATIONS BY THE STATE AND IS IN NO WAY WARRANTED TO INDICATE THE CONDITIONS OF ACTUAL QUANTITIES OF WORK WHICH WILL BE REQUIRED.

Plotted Date: 9/30/2010

NOT TO SCALE

STATE OF CONNECTICUT
DEPARTMENT OF TRANSPORTATION

Filename: CTDOT_HIGHWAY_STD.dgn Model: 77 - HW-1806_01c

SUBMITTED BY: NAME/DATE/TIME:

APPROVED BY: NAME/DATE/TIME:

CTDOT
STANDARD SHEET

OFFICE OF ENGINEERING

STANDARD SHEET TITLE:

CT TRUCK MOUNTED IMPACT ATTENUATOR SHEET 3

STANDARD SHEET NO.:

HW-1806_01c

GENERAL NOTES:

1. CHANNELS MAY BE SHAPED IN CONCRETE BASE OF MANHOLE OR FORMED USING BRICK OR MASONRY.
2. A FRAME DIAMETER OF 3'-3" (991) WITH 4" (102) FLANGE MUST BE USED WHEN THE TOP DIAMETER OF THE PRECAST CONE IS LESS THAN 3'-6" (1067). ALL OTHER FRAME DIMENSIONS SHALL REMAIN THE SAME.
3. COVER:

	CAST IRON	STEEL
MIN. COVER WEIGHT	134LB.(61kg)	134LB.(61kg)

4. ALL DIMENSIONS SUBJECT TO MANUFACTURING TOLERANCES.

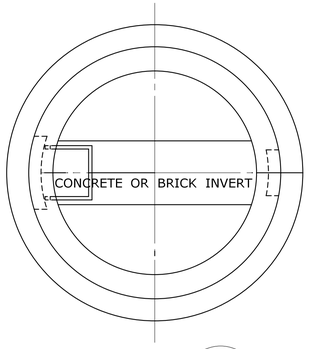

SECTION A
-

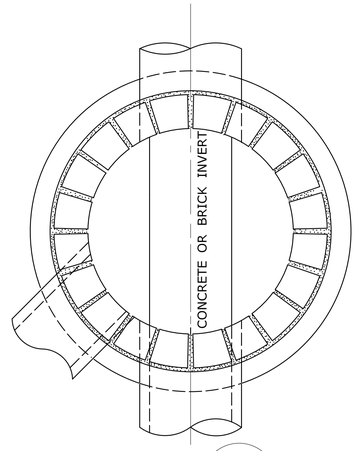

SECTION B
-

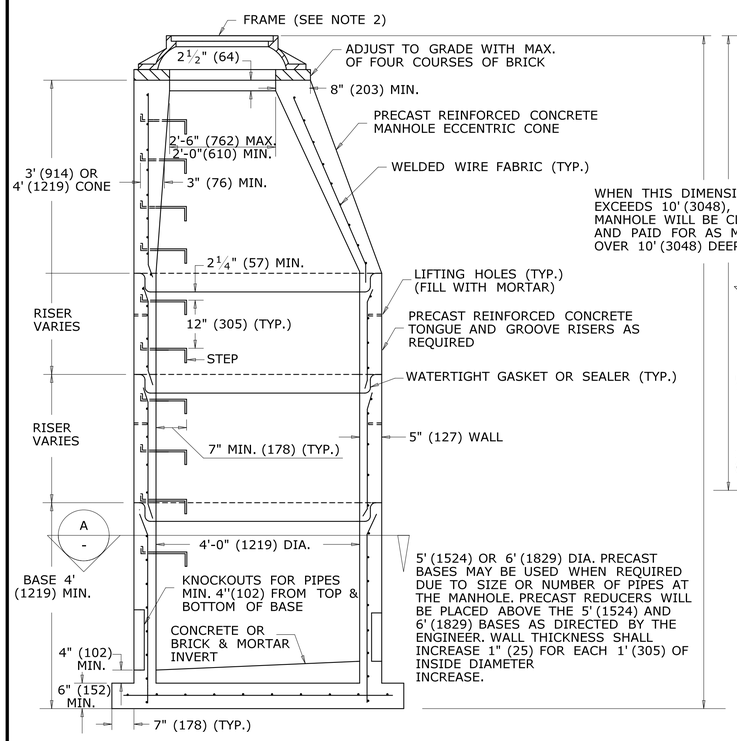

ELEVATION

MANHOLE

REINFORCED PRECAST CONCRETE UNIT

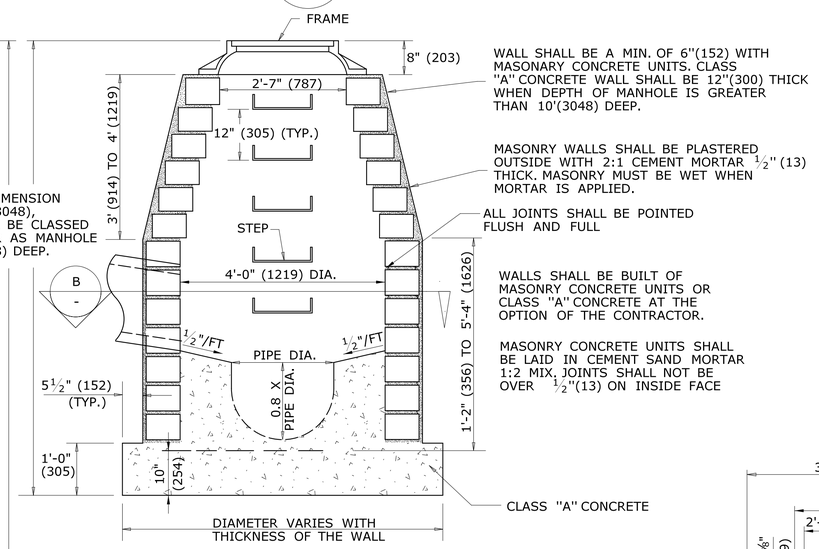

ELEVATION

MANHOLE

MASONARY CONCRETE UNIT OR CLASS "A" CONCRETE

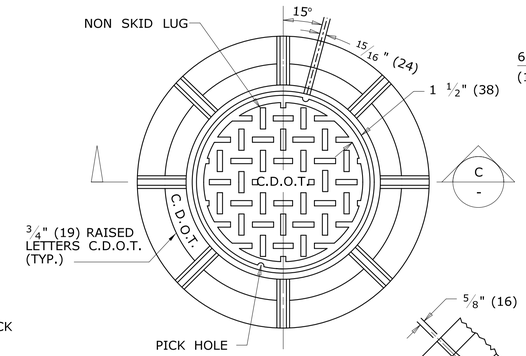

PLAN

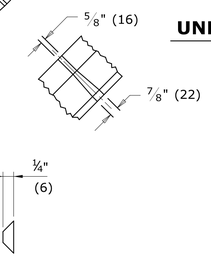

NON SKID LUG DETAIL

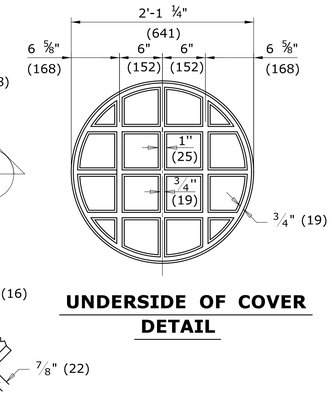

UNDERSIDE OF COVER DETAIL

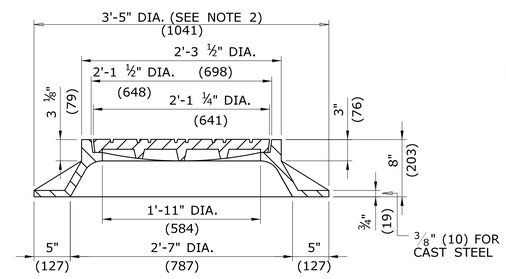

SECTION C
-

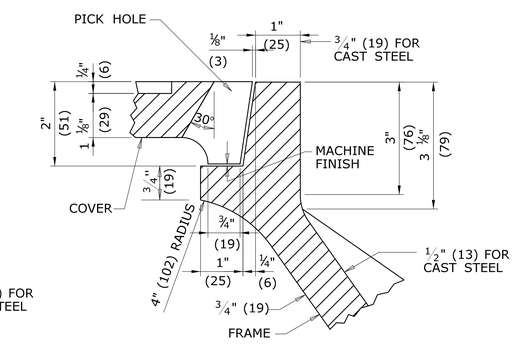

DETAIL OF SEAT

FRAME AND COVER DETAILS

ALL METRIC DIMENSIONS ARE IN MILLIMETERS (mm) UNLESS OTHERWISE NOTED

REV.	DATE	REVISION DESCRIPTION
1	6/11	REVISE STEP WIDTH PER OSHA
2	7/13	REVISE COVER FRAME WEIGHT
-	-	-
-	-	-
-	-	-
-	-	-

THE INFORMATION, INCLUDING ESTIMATED QUANTITIES OF WORK, SHOWN ON THESE SHEETS IS BASED ON LIMITED INVESTIGATIONS BY THE STATE AND IS IN NO WAY WARRANTED TO INDICATE THE CONDITIONS OF ACTUAL QUANTITIES OF WORK WHICH WILL BE REQUIRED.

Plotted Date: 6/13/2013

NOT TO SCALE

STATE OF CONNECTICUT
DEPARTMENT OF TRANSPORTATION

Filename: CTDOT_HIGHWAY_STD2013.dgn Model: 15-HW-507_10

SUBMITTED BY: NAME/DATE/TIME:

APPROVED BY: NAME/DATE/TIME:

CTDOT STANDARD SHEET

OFFICE OF ENGINEERING

STANDARD SHEET TITLE:

MANHOLE - FRAME & COVER

STANDARD SHEET NO.:

HW-507_10

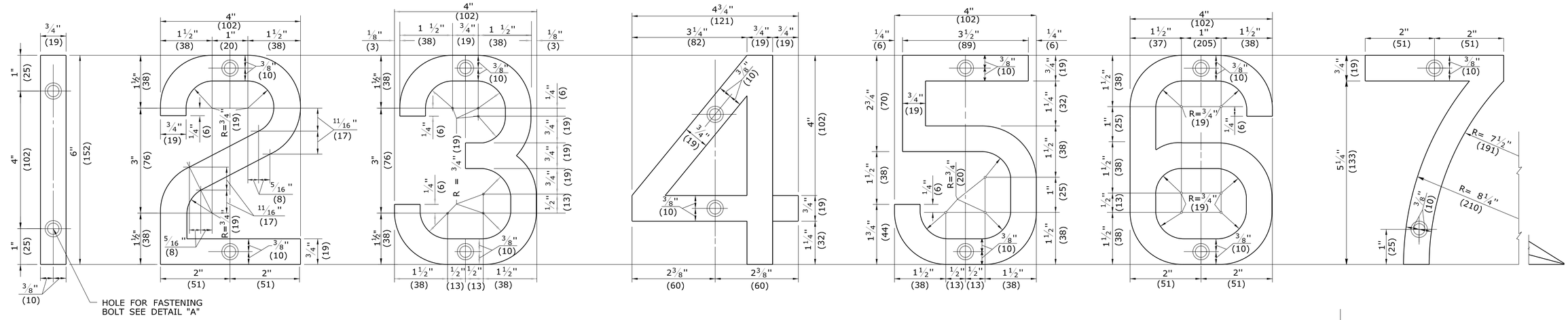

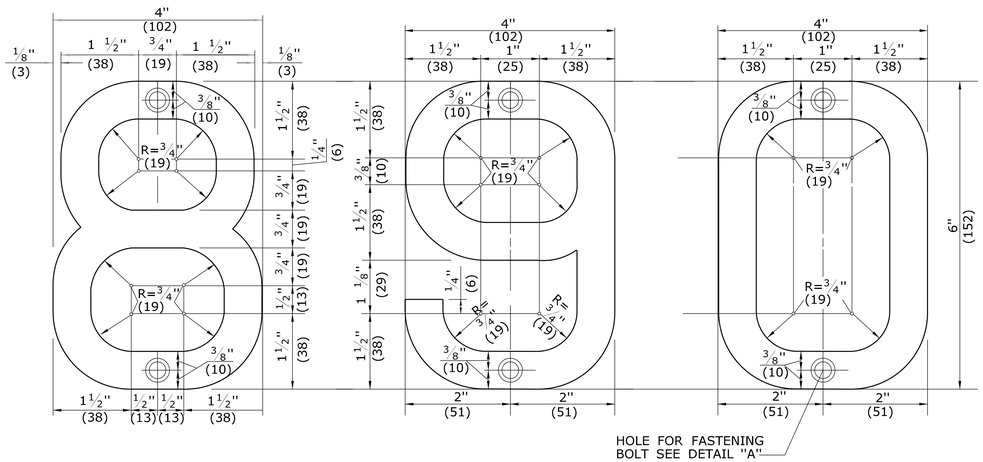

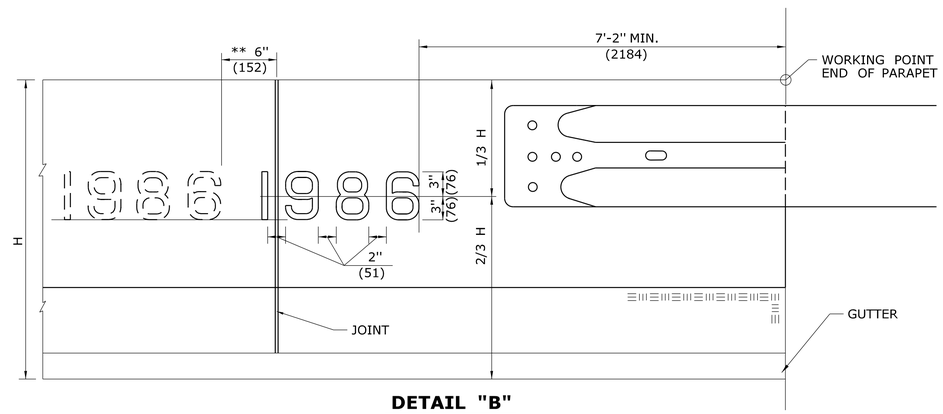

DETAIL "B"

DATE LOCATION ON PARAPET

NOTE:
**WHERE A JOINT INTERFERES, PLACE FIGURES FOR DATE 6"(152) TO THE LEFT OF JOINT AS INDICATED. WHERE THE END OF GUIDERAIL ELEMENT INTERFERS, PLACE FIGURES FOR DATE 6"(152) TO THE LEFT OF THE END OF RAIL ELEMENT.
H = PARAPET HEIGHT AT END - WORKING POINT

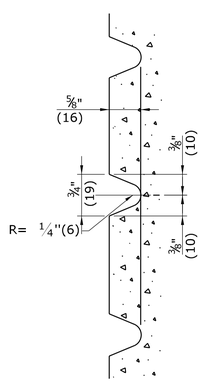

TYPICAL SECTION THROUGH FIGURES

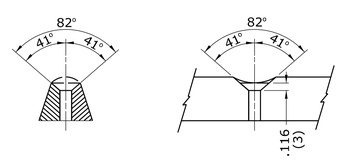

DRILL HOLE WITH #9 DRILL & COUNTERSINK FOR STD. 3/16"(5) - 24th FLATHEAD STOVE BOLT OR #10 - 24th FLATHEAD MACHINE SCREW.

DETAIL "A"

HOLE FOR FASTENING BOLT

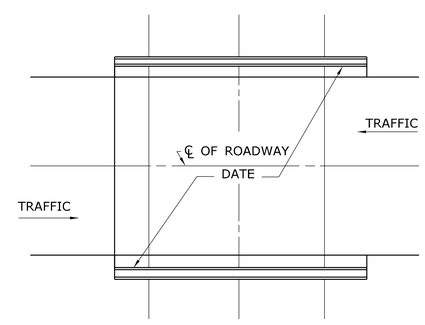

TWO WAY TRAFFIC

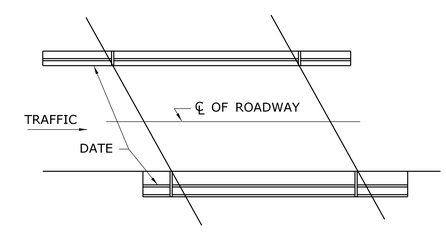

ONE WAY TRAFFIC

TYPICAL PLAN OF BRIDGE SHOWING LOCATION OF DATE AT COMPLETION

ALL METRIC DIMENSIONS ARE IN MILLIMETERS (mm) UNLESS OTHERWISE NOTED

REV.	DATE	REVISION DESCRIPTION
1	6/11	REVISE MIN. LENGTH OF GUIDERAIL ATTACHMENT
-	-	-
-	-	-
-	-	-
-	-	-
-	-	-

THE INFORMATION, INCLUDING ESTIMATED QUANTITIES OF WORK, SHOWN ON THESE SHEETS IS BASED ON LIMITED INVESTIGATIONS BY THE STATE AND IS IN NO WAY WARRANTED TO INDICATE THE CONDITIONS OF ACTUAL QUANTITIES OF WORK WHICH WILL BE REQUIRED.

Plotted Date: 5/10/2011

NOT TO SCALE

STATE OF CONNECTICUT
DEPARTMENT OF TRANSPORTATION

Filename: CTDOT_HIGHWAY_STD_JUNE2011.dgn Model: 16 - HW-601_01

SUBMITTED BY: NAME/DATE/TIME:

APPROVED BY: NAME/DATE/TIME:

CTDOT
STANDARD SHEET

OFFICE OF ENGINEERING

STANDARD SHEET TITLE:

FIGURES FOR DATES ON BRIDGE PARAPETS

STANDARD SHEET NO.:

HW-601_01

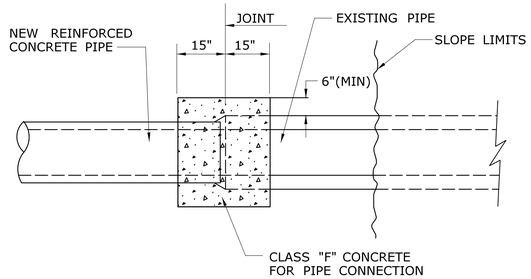

PLAN

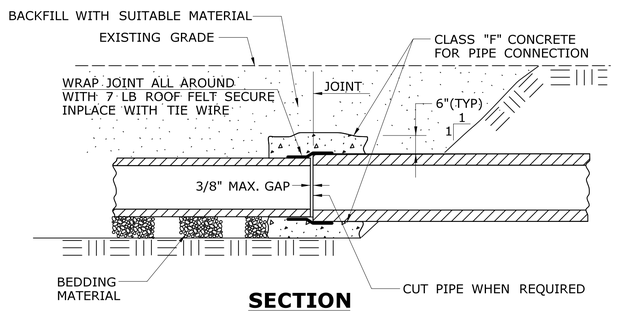

SECTION
CONCRETE PIPE CONNECTION

NOTES:

1. "CONCRETE PIPE CONNECTION" IS INTENDED FOR USE WHERE A REINFORCED CONCRETE PIPE REPAIR OR MODIFICATION IS NEEDED SOMEWHERE WITHIN A PIPE RUN WHERE A BELL/SPIGOT JOINT CANNOT BE ACHIEVED.
2. MAINTAIN INTERIOR ALIGNMENT OF PIPE AT JOINTS UNTIL CONCRETE IS PROPERLY CURED.
3. BACKFILL OF PIPE REPAIR WITH SUITABLE MATERIAL MAY NOT TAKE PLACE UNTIL CONCRETE IS PROPERLY CURED.
4. CONTRACTOR SHALL MAINTAIN LINE AND GRADE OF PIPE REPAIR OR MODIFICATION BY METHODS APPROVED BY THE ENGINEER.
5. HOLES OR GAPS AT JOINT LARGER THAN 3/8" SHALL BE FILLED OR WRAPED TO PREVENT CONCRETE FROM ENTERING PIPE.
6. TRENCH EXCAVATION SHALL BE TO THE MAXIMUM EXTENT NEEDED TO PERFORM WORK.

GENERAL NOTES:

1. ROCK REMOVED BEYOND THE MAXIMUM PAY LIMIT SHOWN SHALL BE REPLACED WITH CEMENT RUBBLE MASONRY AND GRANULAR FILL.
2. FILL, AS REQUIRED TO CLOSE THE OPENING AS SHOWN ON THE PLANS, WILL BE AT THE CONTRACTORS EXPENSE. HOWEVER, THE PAY LIMIT LINES MAY BE MODIFIED TO COINCIDE WITH NATURAL FAULTS OR FISSURES OF ROCK AS THE ENGINEER MAY DETERMINE.
3. COATED CORRAGATED METAL PIPE (C.C.M.P.)

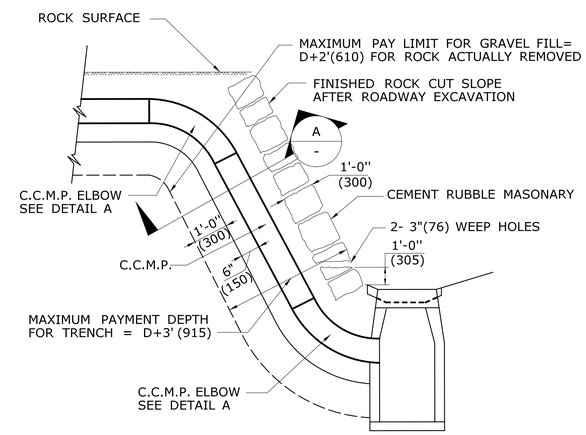

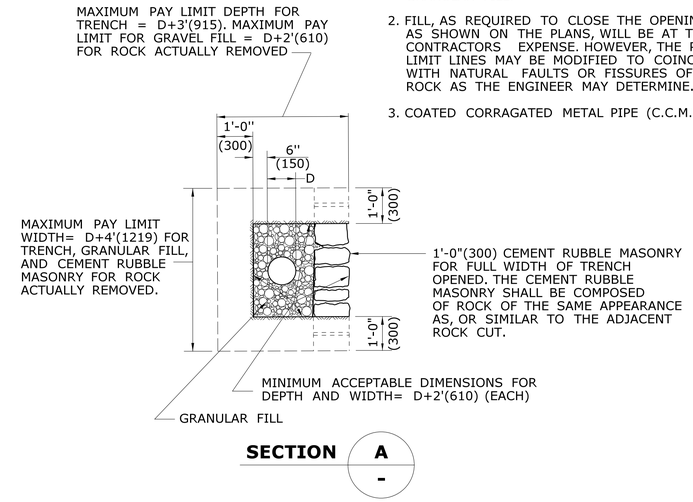

SECTION A/-

TYPICAL INSTALLATION OF C.C.M.P. IN ROCK SLOPE

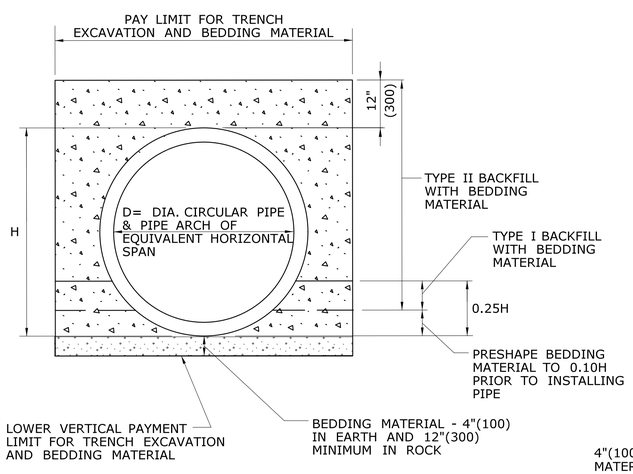

PIPE TRENCH DETAIL
WHERE GRANULAR FILL IS NOT USED

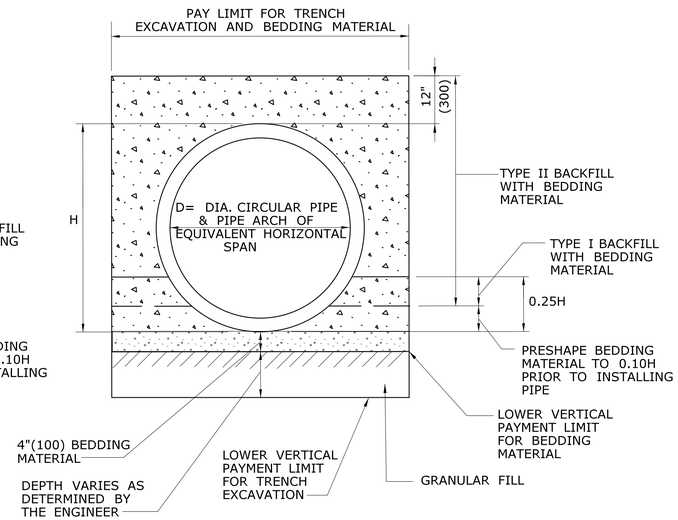

PIPE TRENCH DETAIL
WHERE GRANULAR FILL IS USED AS BEDDING

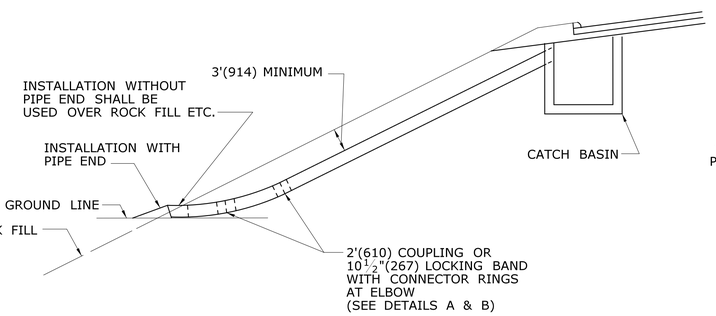

TYPICAL INSTALLATION OF C.C.M.P ELBOW IN FILL SLOPE

TABLE C
CONNECTOR RINGS

PIPE DIAMETER	LENGTH OF RING
12" (300)	52" (1321)
15" (381)	61" (1549)
18" (457)	71" (1803)
21" (533)	80" (2032)
24" (610)	90" (2286)
30" (762)	108" (2743)
36" (915)	128" (3251)
42" (1066)	147" (3734)
48" (1219)	166" (4216)

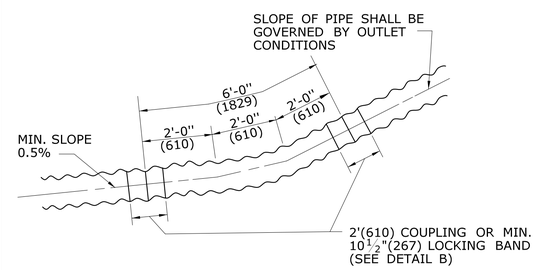

DETAIL A
C.C.M.P. ELBOW AND COUPLING

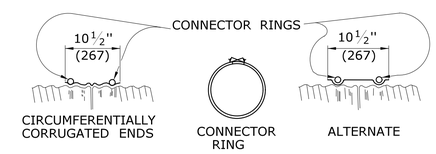

RODS: 7/16"(11) DIAMETER ELECTRO-GALVANIZED WITH 6"(152) LENGTH OF ½"(13) ROLLED THREADS EACH END, FURNISHED CURVED, TO FIT PIPE. SEE TABLE C

LUGS: DOUBLE TAKE UP, CAST IRON, ELECTRO-GALVINIZED.

NOTE: THE COUPLER FASTENING DEVICE SHALL NOT INTERFERE WITH INSTALLATION OF CONNECTOR RINGS.

DETAIL B
ELBOW DIMENSIONS

ALL METRIC DIMENSIONS ARE IN MILLIMETERS (mm) UNLESS OTHERWISE NOTED

REV.	DATE	REVISION DESCRIPTION
-	-	-
-	-	-
-	-	-
3	7/13	ADD CONCRETE PIPE CONNECTION DETAIL
2	6/01/10	REVISE TITLE TO SAY TRENCH DETAIL
1	6/01/10	REMOVE GRAVEL, REPLACE W/ GRANULAR

THE INFORMATION, INCLUDING ESTIMATED QUANTITIES OF WORK, SHOWN ON THESE SHEETS IS BASED ON LIMITED INVESTIGATIONS BY THE STATE AND IS IN NO WAY WARRANTED TO INDICATE THE CONDITIONS OF ACTUAL QUANTITIES OF WORK WHICH WILL BE REQUIRED.

Plotted Date: 6/13/2013

NOT TO SCALE

STATE OF CONNECTICUT
DEPARTMENT OF TRANSPORTATION

Filename: CTDOT_HIGHWAY_STD2013.dgn Model: 17-HW-651_01

SUBMITTED BY: NAME/DATE/TIME:

APPROVED BY: NAME/DATE/TIME:

CTDOT STANDARD SHEET

OFFICE OF ENGINEERING

STANDARD SHEET TITLE:

C.C.M.PIPE INSTALLATIONS IN FILL & ROCK SLOPES & PIPE TRENCH DETAIL

STANDARD SHEET NO.:

HW-651_01

GENERAL NOTES:

1. WHERE GRANITE OR CONCRETE CURBING IS USED SLOTTED DRAIN PIPE WILL BE INSTALLED AS SHOWN FOR MEDIAN BARRIER CURB INSTALLATIONS.
2. D = DIAMETER OF PIPE.

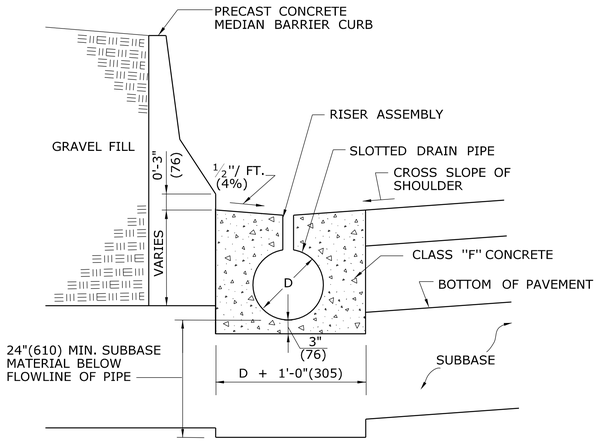

MEDIAN BARRIER CURB INSTALLATION

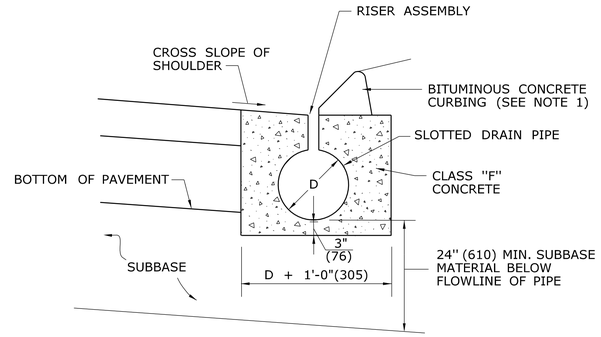

CURB INSTALLATION

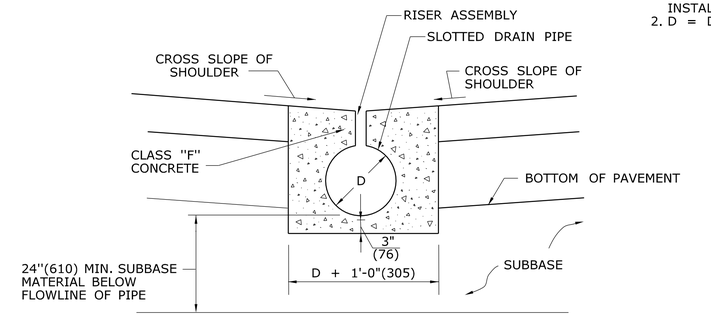

GORE OR MEDIAN INSTALLATION

TYPICAL - APPLICATIONS

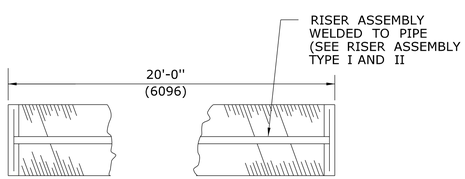

PLAN

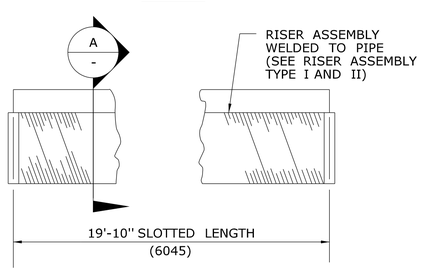

ELEVATION
TYPICAL PIPE SEGMENT

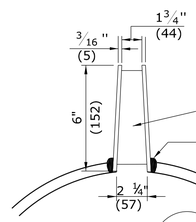

SECTION A - A

RISER ASSEMBLY TYPE I

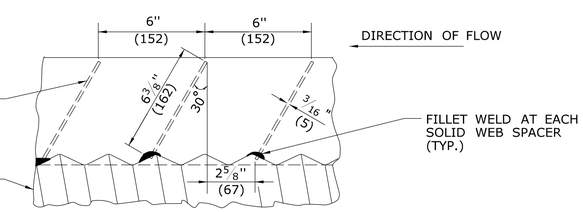

SIDE VIEW OF RISER TYPE I
(SLANTED SPACER PLATES)

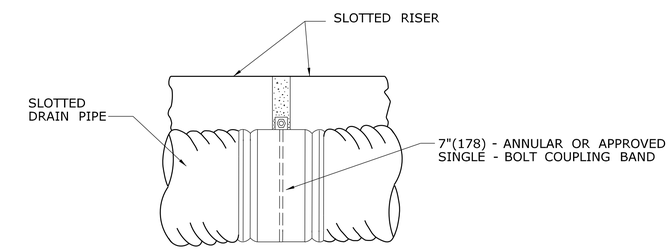

CONNECTION DETAIL

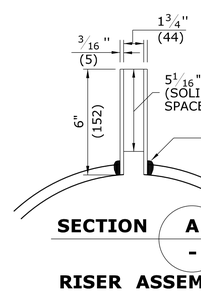

SECTION A - A

RISER ASSEMBLY TYPE II

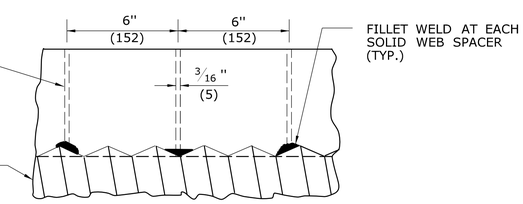

SIDE VIEW OF RISER TYPE II
(VERTICAL SPACER PLATES)

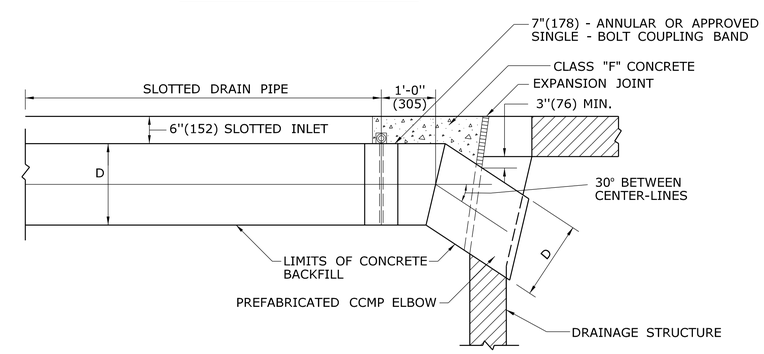

CONNECTION TO DRAINAGE STRUCTURE

NOTE: INSTALL END CAP AT UPSTREAM END

ALL METRIC DIMENSIONS ARE IN MILLIMETERS (mm) UNLESS OTHERWISE NOTED

REV.	DATE	REVISION DESCRIPTION
-	-	-
-	-	-
-	-	-
-	-	-
-	-	-
-	-	-

THE INFORMATION, INCLUDING ESTIMATED QUANTITIES OF WORK, SHOWN ON THESE SHEETS IS BASED ON LIMITED INVESTIGATIONS BY THE STATE AND IS IN NO WAY WARRANTED TO INDICATE THE CONDITIONS OF ACTUAL QUANTITIES OF WORK WHICH WILL BE REQUIRED.

Plotted Date: 6/23/2011

NOT TO SCALE

STATE OF CONNECTICUT
DEPARTMENT OF TRANSPORTATION

Filename: CTDOT_HIGHWAY_STD_JUNE2011.dgn Model: 18 - HW-651_02

SUBMITTED BY: NAME/DATE/TIME:

APPROVED BY: NAME/DATE/TIME:

CTDOT STANDARD SHEET

OFFICE OF ENGINEERING

STANDARD SHEET TITLE:

SLOTTED DRAIN PIPE 12"-15"-18"-24"-30" (305-381-457-610-762)

STANDARD SHEET NO.:

HW-651_02

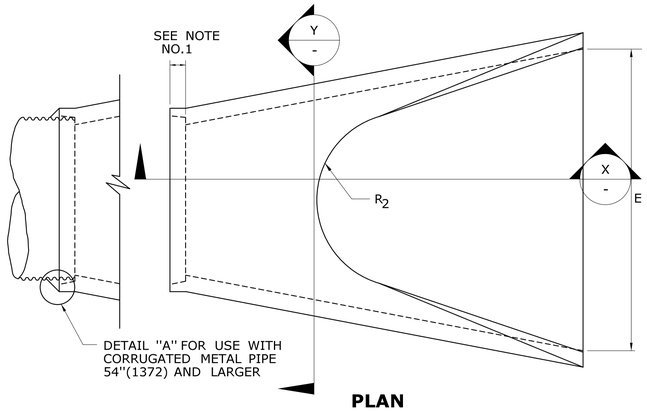

PLAN

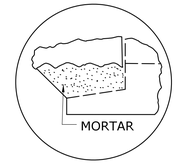

DETAIL "A"

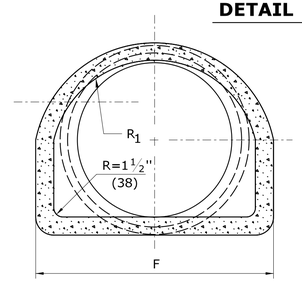

SECTION Y / -

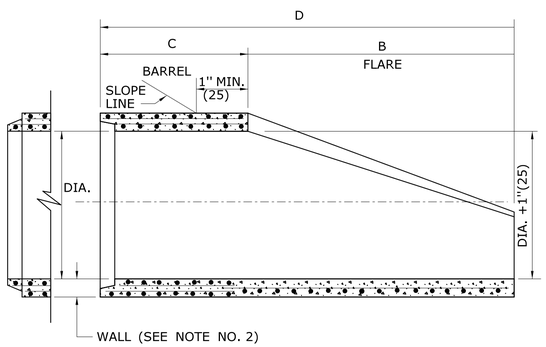

SECTION X / -

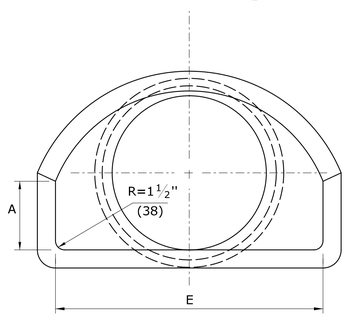

END VIEW

REINFORCED CONCRETE PIPE END

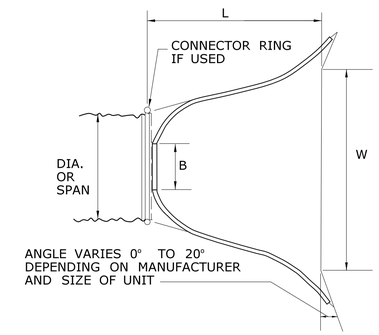

PLAN

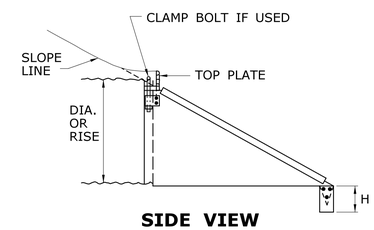

SIDE VIEW

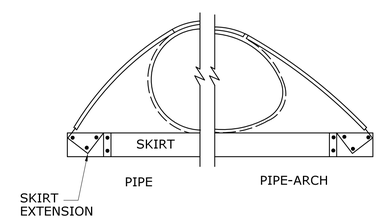

END VIEW

METAL PIPE END

GENERAL NOTES:

1. JOINTS SHALL BE TONGUE AND GROOVE OR BELL AND SPIGOT AS REQUIRED TO CONFORM TO PIPE INSTALLED.
2. WALL THICKNESS SHALL CONFORM TO PIPE THICKNESS.

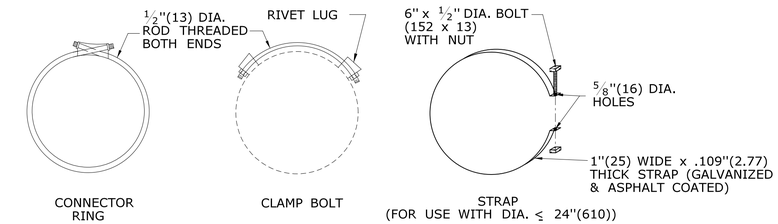

ATTACHMETNT SYSTEMS

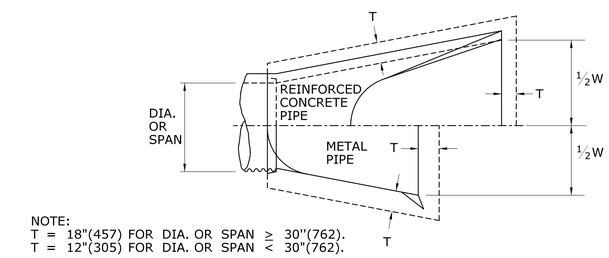

NOTE:
T = 18"(457) FOR DIA. OR SPAN ≥ 30"(762).
T = 12"(305) FOR DIA. OR SPAN < 30"(762).

HORIZONTAL PAY LIMITS FOR TRENCH EXCAVATION-PIPE ENDS

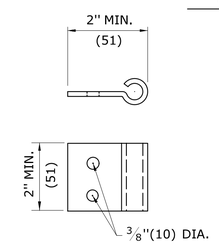

RIVET LUG

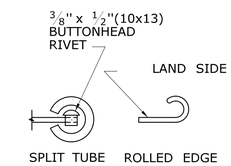

EDGE REINFORCEMENT

DIMENSIONS FOR REINFORCED CONCRETE PIPE END									FLARE REINFORCEMENT ONE LAYER ONLY IN CENTER OF WALL	
DIA.	A	B	C	D	E	F	R_1	R_2	MIN. AREA OF LONGITUDINAL STEEL SQ. IN. PER FT.	MIN. AREA OF TRANSVERSE STEEL SQ. IN. PER FT.
12"(305)	4"(102)	2'-0"(610)	4'-0⅜"(1241)	6'-0⅜"(1851)	2'-0"(610)	1'-7 15/16"(506)	10¼"(260)	9"(229)	0.048	0.048
15"(381)	6"(152)	2'-3"(686)	3'-10"(1168)	6'-1"(1854)	2'-6"(762)	2'-0 5/16"(618)	1'-0½"(318)	11"(279)	0.054	0.054
18"(457)	9"(229)	2'-3"(686)	3'-10"(1168)	6'-1"(1854)	3'-0"(914)	2'-5"(737)	1'-3½"(394)	1'-0"(305)	0.060	0.060
21"(533)	9"(229)	2'-11"(889)	3'-2"(965)	6'-1"(1854)	3'-6"(1067)	2'-7½"(800)	1'-4"(406)	1'-1"(330)	0.066	0.066
24"(610)	9½"(241)	3'-7½"(1105)	2'-6"(762)	6'-1½"(1867)	4'-0"(1219)	2'-9 3/16"(843)	1'-4 13/16"(427)	1'-2"(356)	0.072	0.072
30"(762)	1'-0"(305)	4'-6"(1371)	1'-7¾"(502)	6'-1¾"(1873)	5'-0"(1524)	3'-1"(940)	1'-6½"(470)	1'-3"(381)	0.084	0.084
36"(914)	1'-3"(381)	5'-3"(1600)	2'-10¾"(883)	8'-1¾"(2483)	6'-0"(1829)	3'-11 13/16"(1214)	2'-0 5/16"(618)	1'-8"(508)	0.096	0.096
42"(1067)	1'-9"(534)	5'-3"(1600)	2'-11"(889)	8'-2"(2489)	6'-6"(1981)	4'-5⅞"(1368)	2'-3½"(699)	1'-10"(559)	0.108	0.108
48"(1219)	2'-0"(610)	6'-0"(1829)	2'-2"(660)	8'-2"(2489)	7'-0"(2134)	4'-8½"(1435)	2'-4½"(724)	1'-10"(559)	0.120	0.120
54"(1372)	2'-3"(686)	5'-5"(1651)	2'-11"(889)	8'-4"(2540)	7'-6"(2286)	5'-5½"(1664)	2'-9⅛"(841)	2'-0"(610)	0.132	0.132
60"(1524)	2'-9"(838)	5'-0"(1524)	3'-3"(991)	8'-3"(2515)	8'-0"(2438)	6'-0½"(1842)	3'-0 11/16"(932)	2'-0"(610)	0.144	0.144

PIPE DIA.	DIMENSIONS FOR METAL PIPE END				THICKNESS INS.(mm)
	B (MAX.)	H±1" (±25)	L±1½" (±35)	W±2" (±50)	
12"(305)	6"(152)	6"(152)	21"(533)	24"(610)	.064(1.63)
15"(381)	8"(203)	6"(152)	26"(660)	30"(762)	.064(1.63)
18"(457)	10"(254)	6"(152)	31"(787)	36"(914)	.064(1.63)
21"(533)	12"(305)	6"(152)	36"(914)	42"(1067)	.064(1.63)
24"(610)	13"(330)	6"(152)	41"(1041)	48"(1219)	.064(1.63)
30"(762)	16"(406)	8"(203)	51"(1295)	60"(1524)	.079(2.01)
36"(914)	19"(483)	9"(229)	60"(1524)	72"(1829)	.079(2.01)
42"(1067)	22"(559)	11"(279)	69"(1753)	84"(2134)	.109(2.77)
48"(1219)	27"(686)	12"(305)	78"(1981)	90"(2286)	.109(2.77)
54"(1372)	30"(762)	12"(305)	84"(2134)	102"(2591)	.109(2.77)
60"(1524)	33"(838)	12"(305)	87"(2210)	114"(2896)	.109(2.77)
66"(1676)	36"(914)	12"(305)	87"(2210)	120"(3048)	.109(2.77)
72"(1829)	39"(991)	12"(305)	87"(2210)	126"(3200)	.109(2.77)
78"(1981)	42"(1067)	12"(305)	87"(2210)	132"(3353)	.109(2.77)
84"(2134)	45"(1143)	12"(305)	87"(2210)	138"(3450)	.109(2.77)

PIPE ARCH SIZE		DIMENSIONS FOR METAL PIPE END				
SPAN	RISE	B (MAX.)	H±1" (±25)	L±1½" (±35)	W±2" (±50)	THICKNESS INS.(mm)
17"(432)	13"(330)	9"(229)	6"(152)	19"(483)	30"(762)	.064(1.63)
21"(533)	15"(381)	10"(254)	6"(152)	23"(584)	36"(914)	.064(1.63)
24"(610)	18"(457)	12"(305)	6"(152)	28"(711)	42"(1067)	.064(1.63)
28"(711)	20"(508)	14"(356)	6"(152)	32"(813)	48"1219)	.064(1.63)
35"(889)	24"(610)	16"(406)	6"(152)	39"(991)	60"(1524)	.079(2.01)
42"(1067)	29"(737)	18"(457)	8"(203)	46"(1168)	75"(1905)	.079(2.01)
49"(1245)	33"(838)	21"(533)	9"(229)	53"(1346)	85"(2159)	.109(2.77)
57"(1448)	38"(965)	26"(660)	12"(305)	63"(1600)	90"(2286)	.109(2.77)
64"(1626)	43"(1092)	30"(762)	12"(305)	70"(1778)	102"(2591)	.109(2.77)
71"(1803)	47"(1194)	33"(838)	12"(305)	77"(1956)	114"(2896)	.109(2.77)

ALL METRIC DIMENSIONS ARE IN MILLIMETERS (mm) UNLESS OTHERWISE NOTED.

REV.	DATE	REVISION DESCRIPTION
1	7/13	CHANGE ALL CULVERT LABELS TO SAY PIPE
-	-	-
-	-	-
-	-	-
-	-	-
-	-	-
-	-	-

THE INFORMATION, INCLUDING ESTIMATED QUANTITIES OF WORK, SHOWN ON THESE SHEETS IS BASED ON LIMITED INVESTIGATIONS BY THE STATE AND IS IN NO WAY WARRANTED TO INDICATE THE CONDITIONS OF ACTUAL QUANTITIES OF WORK WHICH WILL BE REQUIRED.

Plotted Date: 3/28/2013

NOT TO SCALE

STATE OF CONNECTICUT
DEPARTMENT OF TRANSPORTATION

Filename: CTDOT_HIGHWAY_STD2013.dgn Model: 19-HW-652_01

SUBMITTED BY: NAME/DATE/TIME:

APPROVED BY: NAME/DATE/TIME:

CTDOT STANDARD SHEET

OFFICE OF ENGINEERING

STANDARD SHEET TITLE:

PIPE ENDS

STANDARD SHEET NO.:

HW-652_01

GENERAL NOTES:

1. THE OUTLET ENDWALL CAN BE EITHER PRECAST OR CAST IN PLACE. CONCRETE SHALL BE CLASS "C" CONCRETE.
2. IF PRECAST CONCRETE ENDWALL IS USED, THE OUTLET SHALL BE GROUTED AND SEALED TO ENDWALL OPENING WITH NON-SHRINK GROUT.

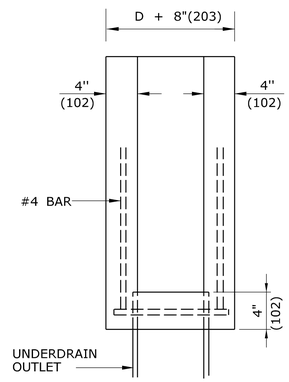

PLAN VIEW

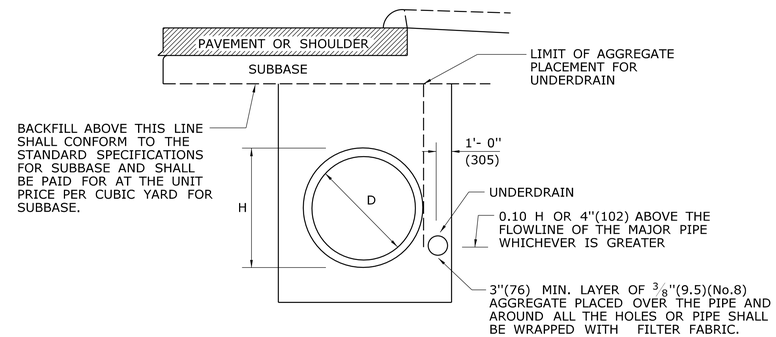

NOTE:
PAY LIMIT FOR TRENCH EXCAVATION AND BEDDING SHALL BE THE SAME AS FOR THE CULVERT ALONE. MATERIAL ABOVE THE BEDDING SHALL BE SUITABLE MATERIAL OR GRANULAR FILL.

CULVERT AND UNDERDRAIN IN THE SAME TRENCH

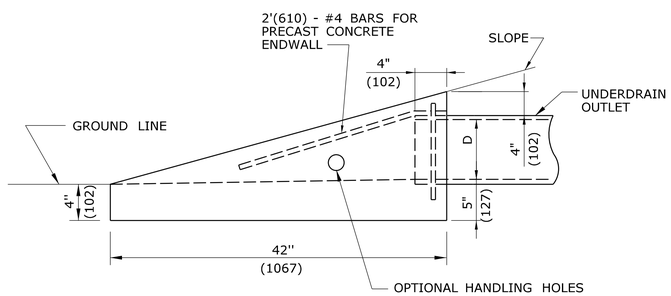

ENDWALL

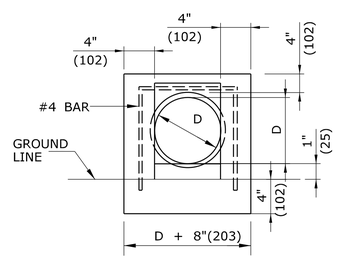

ELEVATION

UNDERDRAIN OUTLET DETAILS

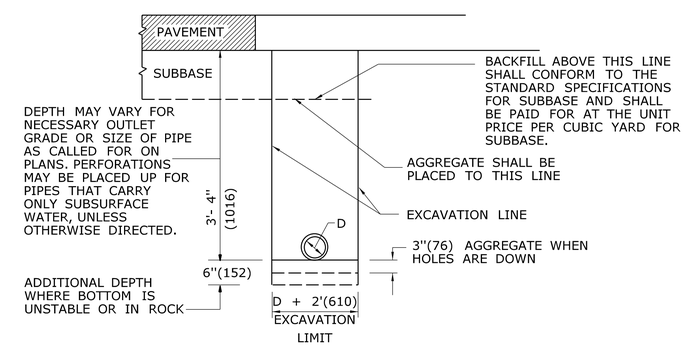

UNDERDRAIN

ALL METRIC DIMENSIONS ARE IN MILLIMETERS (mm) UNLESS OTHERWISE NOTED

REV.	DATE	REVISION DESCRIPTION
1	6/01/10	REMOVED RODENT SCREEN DETAILS AND REVISED TITLES
-	-	-
-	-	-
-	-	-
-	-	-
-	-	-

THE INFORMATION, INCLUDING ESTIMATED QUANTITIES OF WORK, SHOWN ON THESE SHEETS IS BASED ON LIMITED INVESTIGATIONS BY THE STATE AND IS IN NO WAY WARRANTED TO INDICATE THE CONDITIONS OF ACTUAL QUANTITIES OF WORK WHICH WILL BE REQUIRED.

Plotted Date: 6/23/2011

NOT TO SCALE

STATE OF CONNECTICUT
DEPARTMENT OF TRANSPORTATION

Filename: CTDOT_HIGHWAY_STD_JUNE2011.dgn Model: 20 - HW-751_01

SUBMITTED BY: NAME/DATE/TIME:

APPROVED BY: NAME/DATE/TIME:

CTDOT
STANDARD SHEET

OFFICE OF ENGINEERING

STANDARD SHEET TITLE:

UNDERDRAINS AND UNDERDRAIN OUTLETS

STANDARD SHEET NO.:

HW-751_01

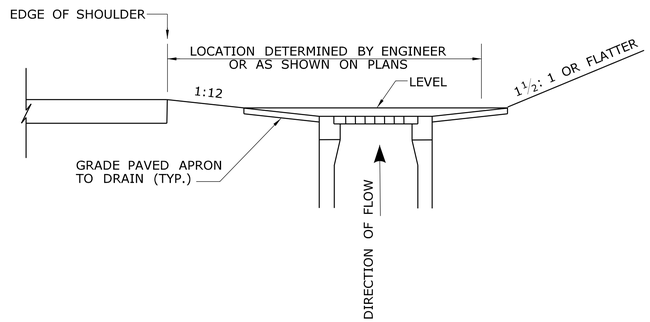

SECTION A

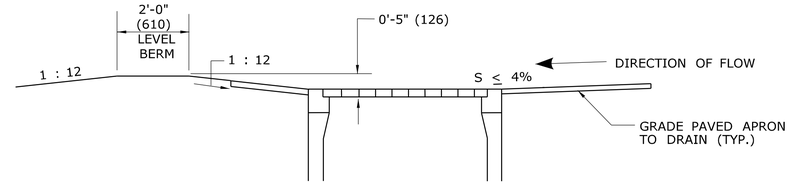

SECTION B

ON GRADES LESS THAN OR EQUAL TO 4%

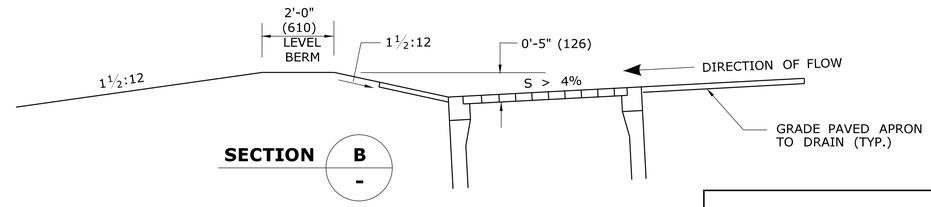

SECTION B

ON GRADES GREATER THAN 4%

GENERAL NOTES:

1. ALL CONSTRUCTION DIMENSIONS ARE NOMINAL.
2. FOR CATCH BASIN DIMENSIONS NOT SHOWN, SEE STANDARD SHEET SERIES 507.
3. PAVED APRON DIMENSIONS WILL REMAIN THE SAME FOR DOUBLE AND SINGLE GRATES.
4. BITUMINOUS CONCRETE CLASS 3 MAY BE USED FOR APRONS, AND PAVED DITCHS WITH PERMISSION OF THE ENGINEER.
5. PAVED APRON AND GRADING WORK SHALL BE INCLUDED IN THE ITEM PAVED DITCH.

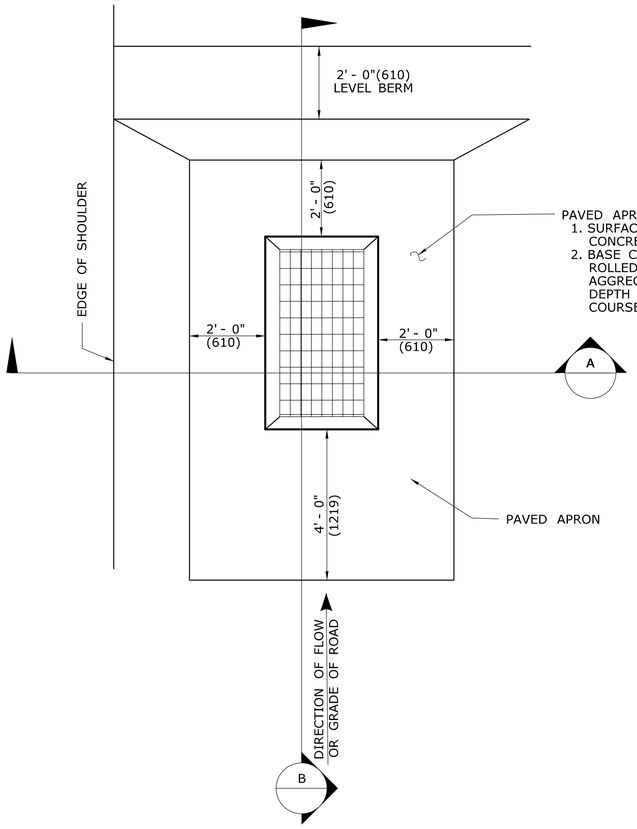

PLAN
ON GRADE CONDITION

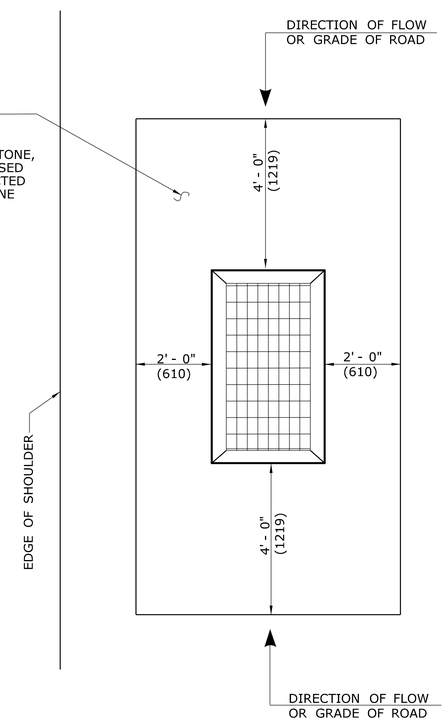

PLAN
SAG CONDITION

PAVED APRON FOR "C-L" CATCH BASIN

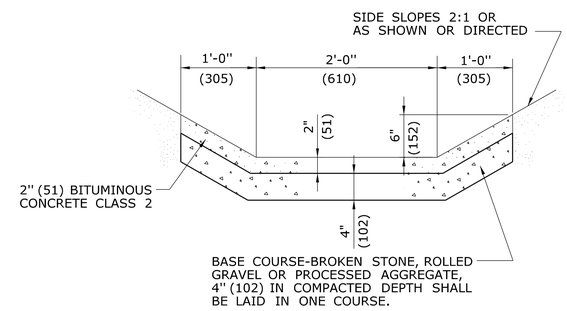

PAVED DITCH

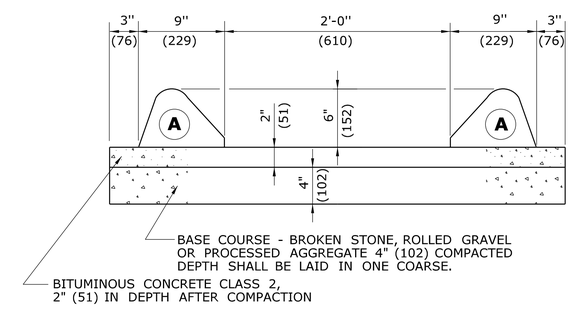

(A) SHALL BE CONSTRUCTED TO CONFORM TO BITUMINOUS CONCRETE LIP CURBING - CLASS 3 - AS SHOWN ON PLANS

ALTERNATE PAVED DITCH

ALL METRIC DIMENSIONS ARE IN MILLIMETERS (mm) UNLESS OTHERWISE NOTED

REV.	DATE	REVISION DESCRIPTION
-	-	-
-	-	-
-	-	-
-	-	-
-	-	-
-	-	-

THE INFORMATION, INCLUDING ESTIMATED QUANTITIES OF WORK, SHOWN ON THESE SHEETS IS BASED ON LIMITED INVESTIGATIONS BY THE STATE AND IS IN NO WAY WARRANTED TO INDICATE THE CONDITIONS OF ACTUAL QUANTITIES OF WORK WHICH WILL BE REQUIRED.

Plotted Date: 6/23/2011

NOT TO SCALE

STATE OF CONNECTICUT
DEPARTMENT OF TRANSPORTATION

Filename: CTDOT_HIGHWAY_STD_JUNE2011.dgn Model: 21 - HW-803_01

SUBMITTED BY: NAME/DATE/TIME:

APPROVED BY: NAME/DATE/TIME:

CTDOT STANDARD SHEET

OFFICE OF ENGINEERING

STANDARD SHEET TITLE:

PAVED DITCH AND PAVED APRON

STANDARD SHEET NO.:

HW-803_01

NOTE:

1. ALL CONSTRUCTION DIMENSIONS ARE NOMINAL.

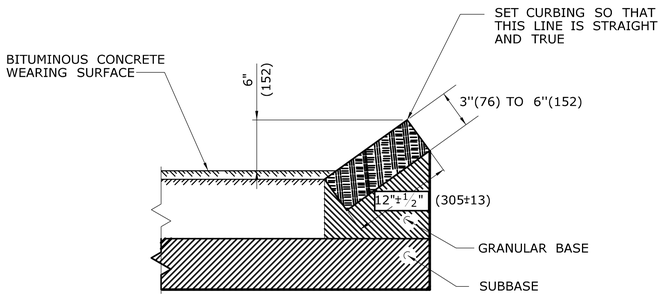

TYPICAL SECTION SHOWING SLOPE CURBING SET ADJACENT TO BITUMINOUS CONCRETE SURFACES

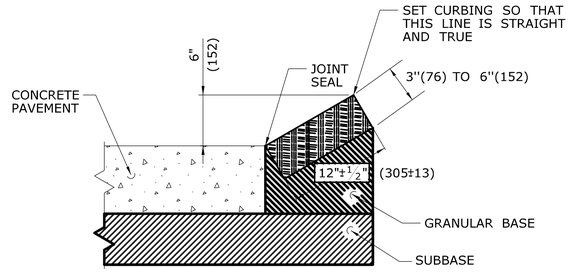

TYPICAL SECTION SHOWING SLOPE CURBING SET ADJACENT TO CONCRETE SURFACES

GRANITE SLOPE CURBING

½"(13) MORTAR JOINT REQUIRED

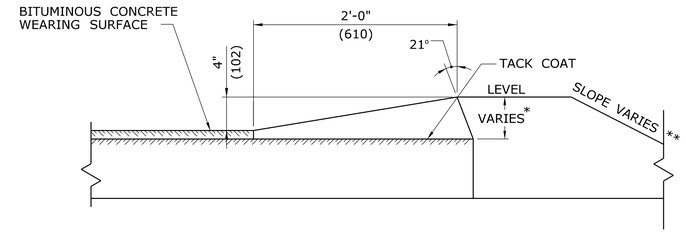

* THIS DIMENSION VARIES WITH THE THICKNESS OF THE TOP COURSE AND SLOPE OF SHOULDER.

** SEE TYPICAL SECTIONS FOR PROJECT. IN FILL AREAS 2'(610) LEVEL BEHIND THE CURB IS REQUIRED.

BITUMINOUS CONCRETE BERM

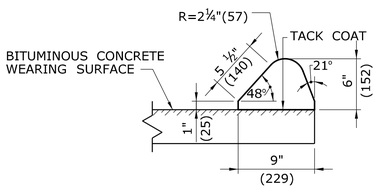

6"(150) BITUMINOUS CONCRETE LIP CURBING

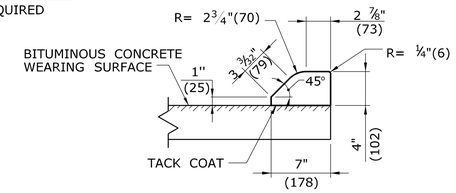

4"(100) BITUMINOUS CONCRETE PARK CURBING

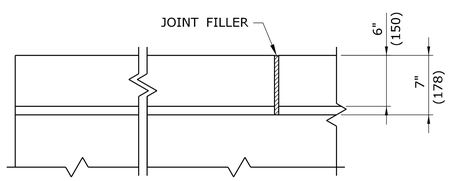

PLAN

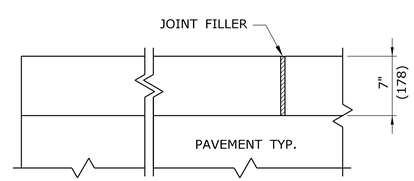

PLAN

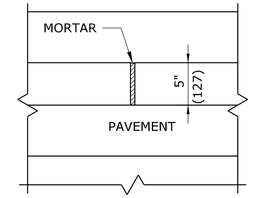

PLAN

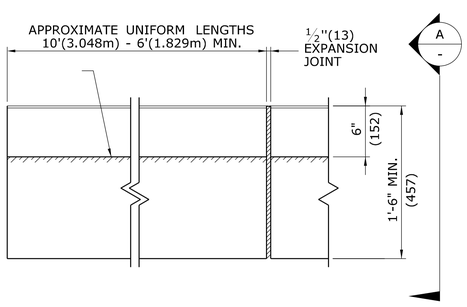

ELEVATION

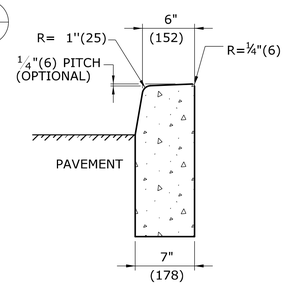

SECTION A -

6" (150) CONCRETE CURBING

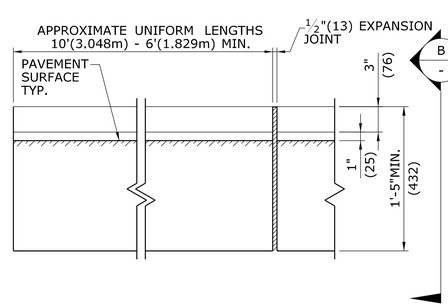

ELEVATION

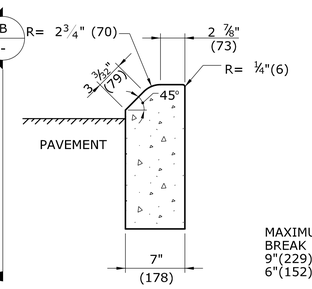

SECTION B -

4"(100) CONCRETE PARK CURBING

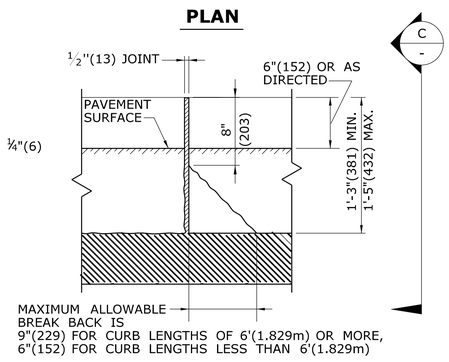

ELEVATION

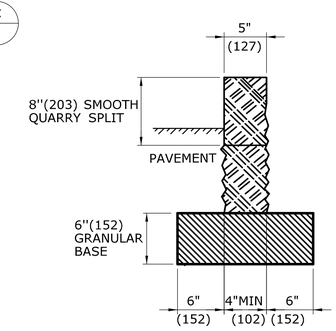

SECTION C -

STONE CURBING

ALL METRIC DIMENSIONS ARE IN MILLIMETERS (mm) UNLESS OTHERWISE NOTED

REV.	DATE	REVISION DESCRIPTION
-	-	-
-	-	-
-	-	-
-	-	-
-	-	-
1	6/01/10	REVISED TITLE FOR 6" CONC. CURB

THE INFORMATION, INCLUDING ESTIMATED QUANTITIES OF WORK, SHOWN ON THESE SHEETS IS BASED ON LIMITED INVESTIGATIONS BY THE STATE AND IS IN NO WAY WARRANTED TO INDICATE THE CONDITIONS OF ACTUAL QUANTITIES OF WORK WHICH WILL BE REQUIRED.

Plotted Date: 6/23/2011

NOT TO SCALE

STATE OF CONNECTICUT
DEPARTMENT OF TRANSPORTATION

Filename: CTDOT_HIGHWAY_STD_JUNE2011.dgn Model: 22 - HW-811_01

SUBMITTED BY: NAME/DATE/TIME:

APPROVED BY: NAME/DATE/TIME:

CTDOT STANDARD SHEET

OFFICE OF ENGINEERING

STANDARD SHEET TITLE: CURBING

STANDARD SHEET NO.: HW-811_01

GENERAL NOTES:

1. GRANITE STONE TRANSITION CURBING WILL BE INSTALLED AS NOTED ON THE PLANS AND IN ACCORDANCE WITH FORM 816 SECTION 8.13 "STONE CURBING".
2. GRANITE STONE TRANSITION CURBING (INCLUDING DOWEL) WILL BE PAID FOR AT THE CONTRACT UNIT PRICE FOR "GRANITE STONE TRANSITION CURBING".
3. FOR NEW R-B 350 GUIDERAIL TRANSITIONS, ADJUSTMENT OF EXISTING CURBING HEIGHT TO A 4" (102) REVEAL AT THE BRIDGE PARAPET WILL BE REQUIRED. IT MAY BE PAID FOR, WHEN NOTED ON THE PLANS, UNDER THE ITEM "RESET CURBING".
4. NEW INSTALLATIONS OF THIS CURBING SHALL ONLY BE ALLOWED ON THE MERRITT PARKWAY.
5. GRANITE STONE TRANSITION CURBING SHALL BE INSTALLED TO MATCH THE SLOPE OF SLOPED GRANITE STONE CURBING ON THE BRIDGE. ALL SECTIONS OF THE TRANSITION CURBING SHALL BE 2'-0" (610) LONG.

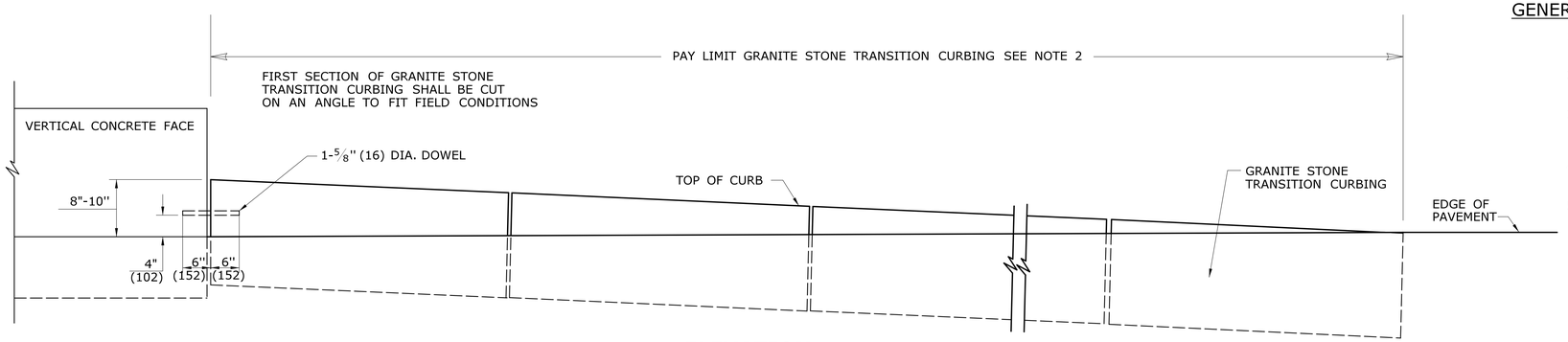

ELEVATION

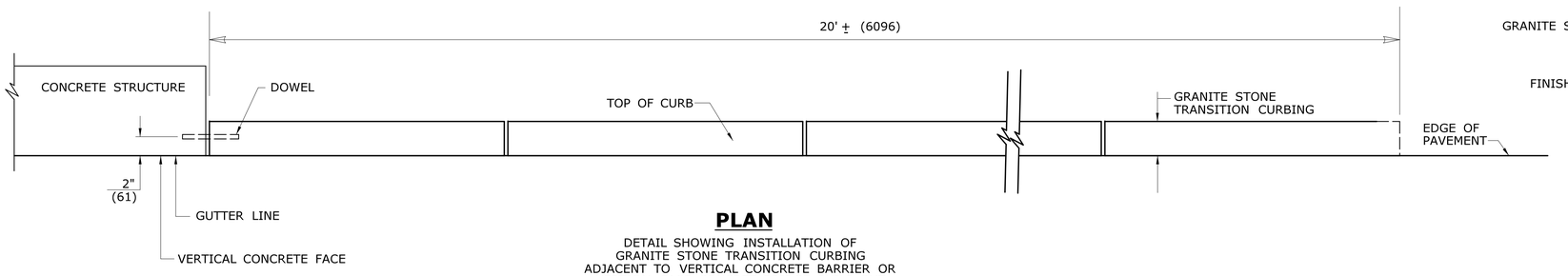

PLAN

DETAIL SHOWING INSTALLATION OF GRANITE STONE TRANSITION CURBING ADJACENT TO VERTICAL CONCRETE BARRIER OR VERTICAL FACE CONCRET BRIDGE BUILD-OUT WITH NO ADJACENT ROADWAY CURBING

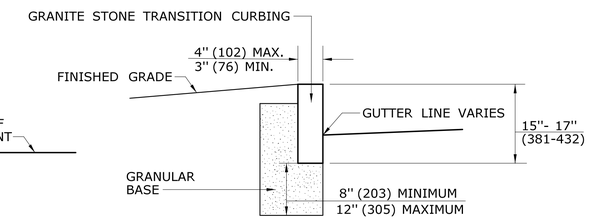

TYPICAL SECTION SHOWING INSTALLATION OF GRANITE STONE TRANSITION CURBING AT VERTICAL FACE

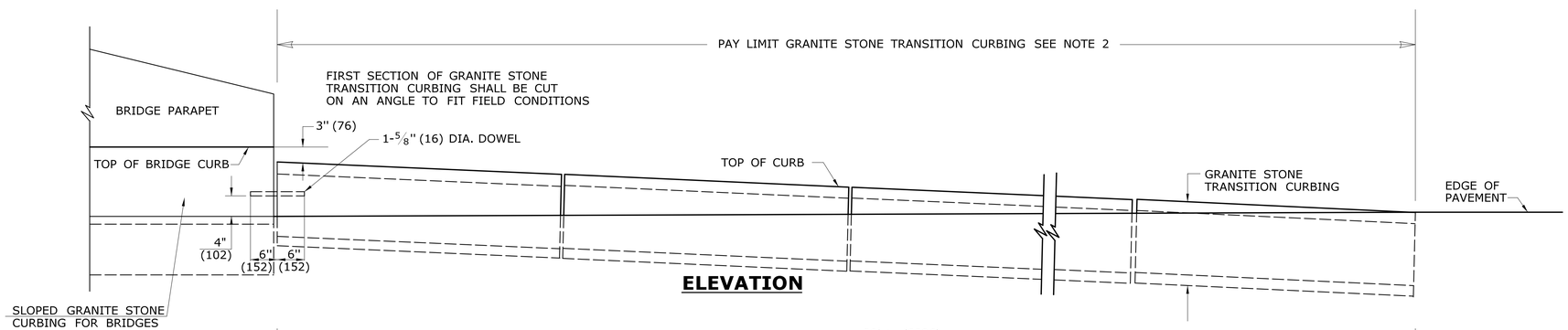

ELEVATION

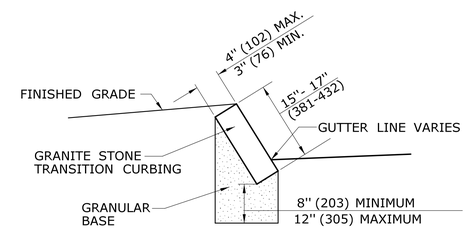

TYPICAL SECTION SHOWING INSTALLATION OF GRANITE STONE TRANSITION CURBING AT SLOPED GRANITE BRIDGE CURBING

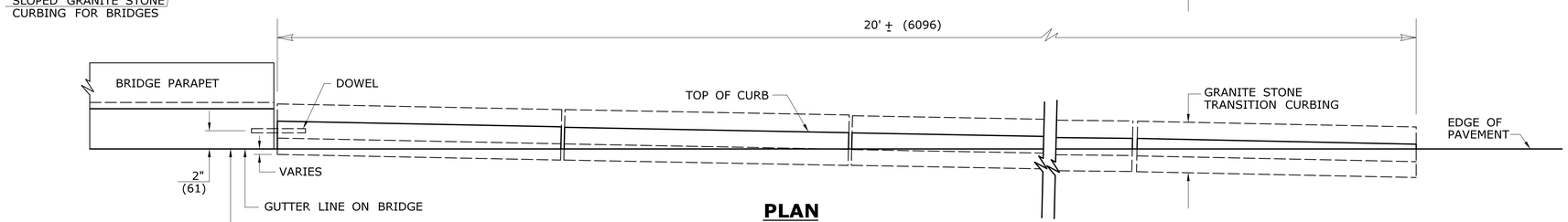

PLAN

DETAIL SHOWING INSTALLATION OF GRANITE STONE TRANSITION CURBING ADJACENT TO BRIDGE CURBING WITH NO ADJACENT ROADWAY CURBING

ALL METRIC DIMENSIONS ARE IN MILLIMETERS (mm) UNLESS OTHERWISE NOTED.

REV.	DATE	REVISION DESCRIPTION
1	7/13	ADD VERTICAL FACE CURBING DETAIL -
-	-	- -
-	-	- -
-	-	- -
-	-	- -
-	-	- -

THE INFORMATION, INCLUDING ESTIMATED QUANTITIES OF WORK, SHOWN ON THESE SHEETS IS BASED ON LIMITED INVESTIGATIONS BY THE STATE AND IS IN NO WAY WARRANTED TO INDICATE THE CONDITIONS OF ACTUAL QUANTITIES OF WORK WHICH WILL BE REQUIRED.

Plotted Date: 3/21/2013

NOT TO SCALE

STATE OF CONNECTICUT
DEPARTMENT OF TRANSPORTATION

Filename: June2013.dgn Model: HW-813_01

SUBMITTED BY: NAME/DATE/TIME:

APPROVED BY: NAME/DATE/TIME:

CTDOT STANDARD SHEET

OFFICE OF ENGINEERING

STANDARD SHEET TITLE:

GRANITE STONE TRANSITION CURBING

STANDARD SHEET NO.:

HW-813_01

GENERAL NOTES:

1. ALTERNATE DESIGNS FOR THE LIFTING KEYS OR OTHER HANDLING DEVICES MAY BE SUBMITTED TO THE ENGINEER FOR APPROVAL.
2. FOR END CONNECTION DETAILS SEE SHEET HW-821_07.
3. SEE SHEET HW-821_01b FOR REINFORCING BARS NOT SHOWN.
4. 100' (30.5m) LENGTH OF 45" (1143) HIGH VERTICAL FACE BARRIER REQUIRED PRIOR TO OBJECT.
5. PRECAST UNITS SHALL BE COATED WITH A PENETRATING SEALER.
6. THE FIRST AND LAST SECTIONS OF BARRIER SHALL NOT HAVE EXPOSED PROTRUDING DOWELS.

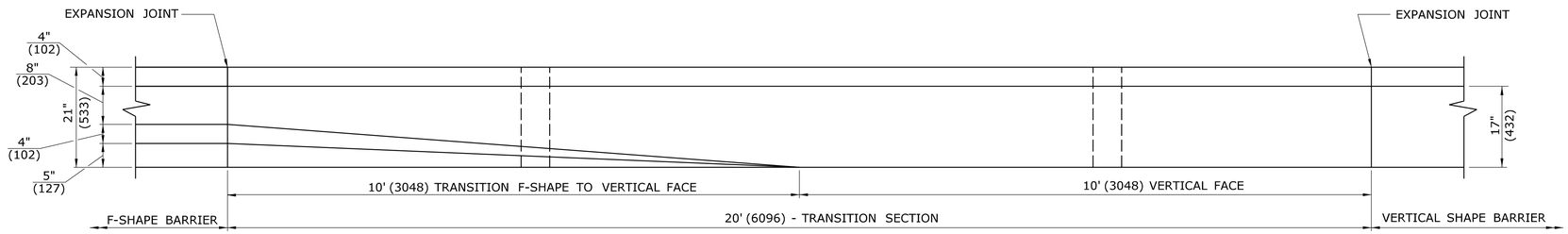

PLAN - BARRIER TRANSITION

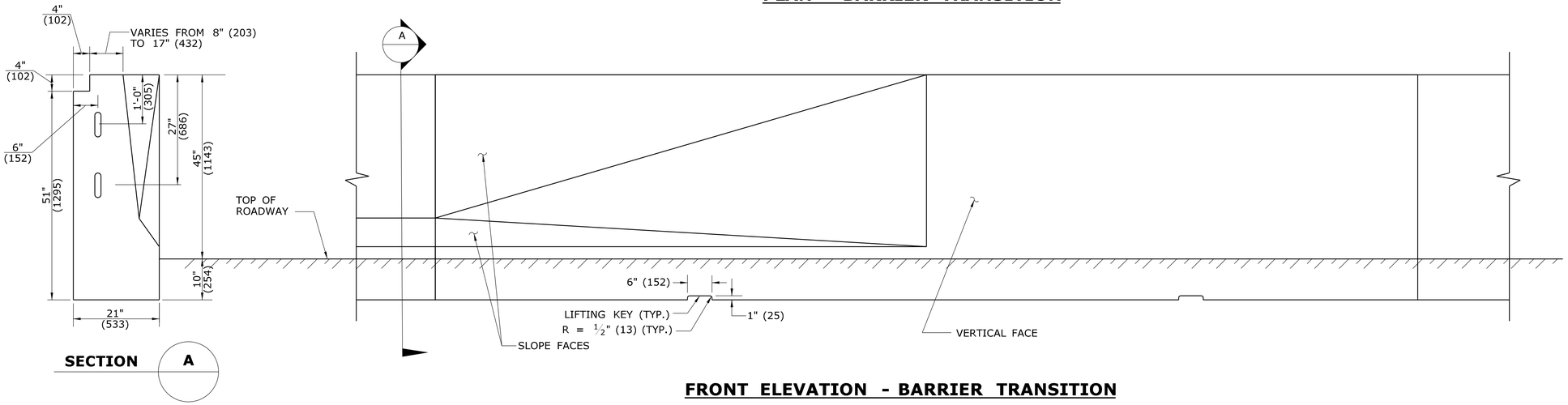

FRONT ELEVATION - BARRIER TRANSITION

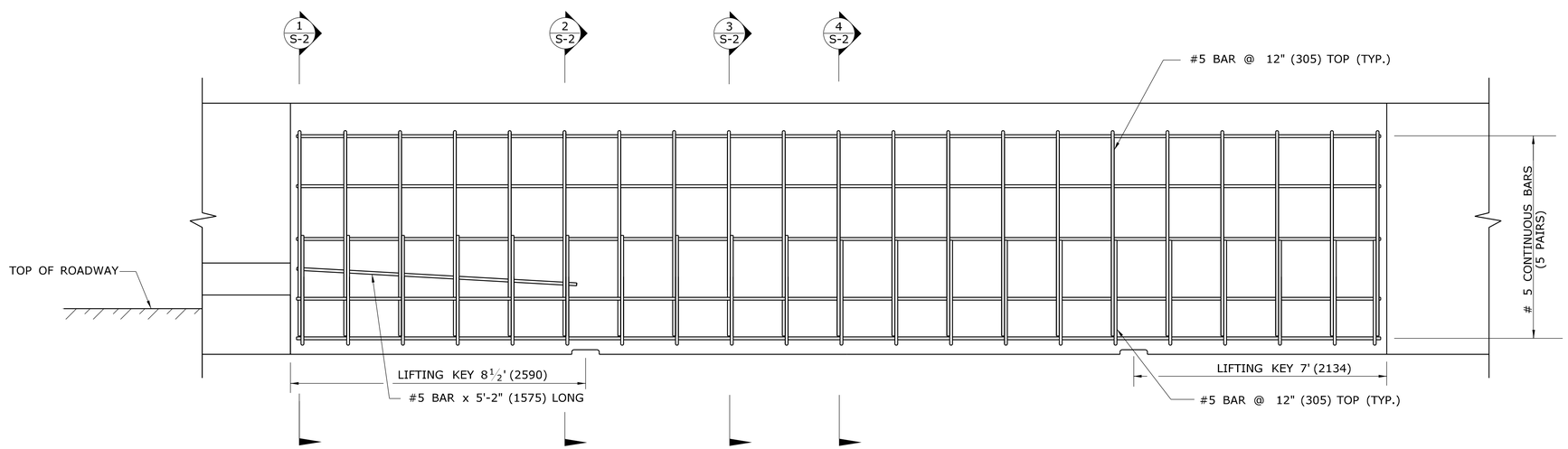

FRONT ELEVATION - TRANSITION BARRIER REINFORCEMENT

ALL METRIC DIMENSIONS ARE IN MILLIMETERS (mm) UNLESS OTHERWISE NOTED.

REV.	DATE	REVISION DESCRIPTION
1	1/12	REVISE NOTE 2. DELETE HW-821_01c
-	-	-
-	-	-
-	-	-
-	-	-
-	-	-

THE INFORMATION, INCLUDING ESTIMATED QUANTITIES OF WORK, SHOWN ON THESE SHEETS IS BASED ON LIMITED INVESTIGATIONS BY THE STATE AND IS IN NO WAY WARRANTED TO INDICATE THE CONDITIONS OF ACTUAL QUANTITIES OF WORK WHICH WILL BE REQUIRED.

Plotted Date: 1/9/2012

NOT TO SCALE

STATE OF CONNECTICUT
DEPARTMENT OF TRANSPORTATION

Filename: Jan2012.dgn Model: HW-821_01a

SUBMITTED BY: NAME/DATE/TIME:

APPROVED BY: NAME/DATE/TIME:

CTDOT STANDARD SHEET

OFFICE OF ENGINEERING

STANDARD SHEET TITLE:

TRANSITION 45" (1145) F-SHAPE TO 45" (1145) VERTICAL SHAPE SHEET 1

STANDARD SHEET NO.:

HW-821_01a

GENERAL NOTE :

1. MINIMUM SPLICE LENGTH FOR ALL BARS IS 1'-9" (534).

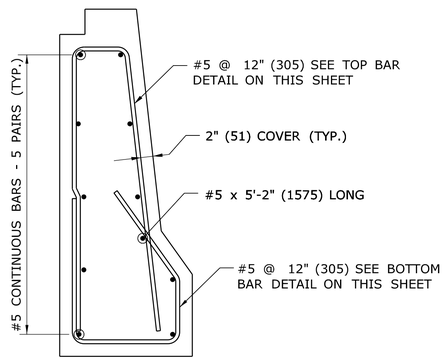

SECTION - BAR 1 (1 / S-2)

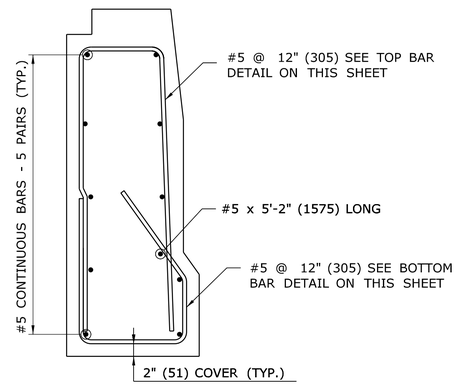

SECTION - BAR 6 (2 / S-2)

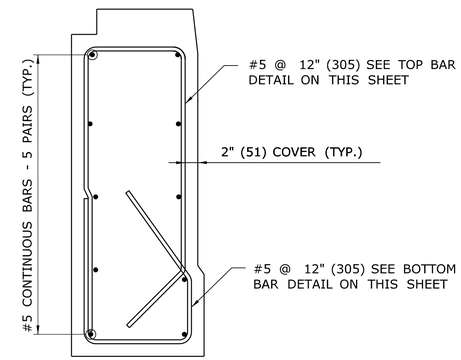

SECTION - BAR 9 (3 / S-2)

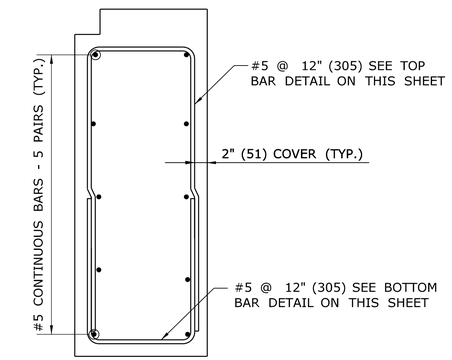

SECTION - BAR 11 (4 / S-2)

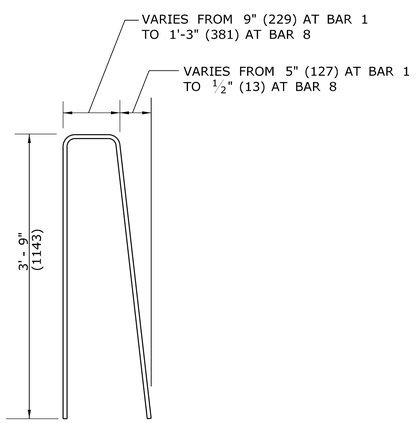

TOP BARS
BARS 1 TO 8

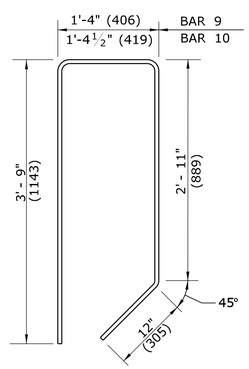

TOP BARS
BARS 9 AND 10

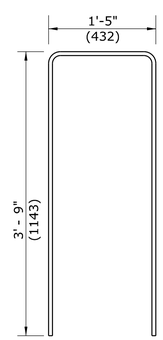

TOP BARS
BARS 11 TO 21

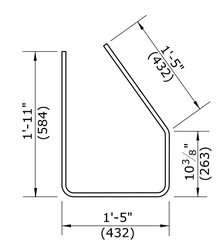

BOTTOM BARS
BARS 1 TO 10

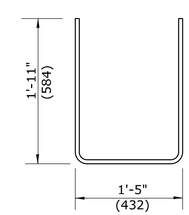

BOTTOM BARS
BARS 11 TO 21

ALL METRIC DIMENSIONS ARE IN MILLIMETERS (mm) UNLESS OTHERWISE NOTED.

REV.	DATE	REVISION DESCRIPTION
-	-	-
-	-	-
-	-	-
-	-	-
-	-	-
-	-	-

THE INFORMATION, INCLUDING ESTIMATED QUANTITIES OF WORK, SHOWN ON THESE SHEETS IS BASED ON LIMITED INVESTIGATIONS BY THE STATE AND IS IN NO WAY WARRANTED TO INDICATE THE CONDITIONS OF ACTUAL QUANTITIES OF WORK WHICH WILL BE REQUIRED.

Plotted Date: 10/12/2010

NOT TO SCALE

STATE OF CONNECTICUT
DEPARTMENT OF TRANSPORTATION

Filename: CTDOT_HIGHWAY_STD_OCT2010.dgn Model: 25-HW-821_01b

SUBMITTED BY: NAME/DATE/TIME:

APPROVED BY: NAME/DATE/TIME:

CTDOT
STANDARD SHEET

OFFICE OF ENGINEERING

STANDARD SHEET TITLE:

TRANSITIION 45" (1145) F-SHAPE TO 45" (1145) VERTICAL SHAPE SHEET 2

STANDARD SHEET NO.:

HW-821_01b

GENERAL NOTES:

1. ALTERNATE DESIGNS FOR UNIT END CONNECTIONS SIMILAR TO THE DESIGNS SHOWN MAY BE SUBMITTED TO THE ENGINEER FOR APPROVAL.
2. TERMINAL END TREATMENTS SHALL BE CONSTRUCTED AS SHOWN ON THE PLANS OR AS DIRECTED BY THE ENGINEER.
3. THE CONCRETE CAP JOINT SEAL, JOINT FILLER FOR BRIDGES, AND WELDED STEEL WIRE FABRIC SHALL BE PAID FOR AS PART OF CLASS "A" CONCRETE.

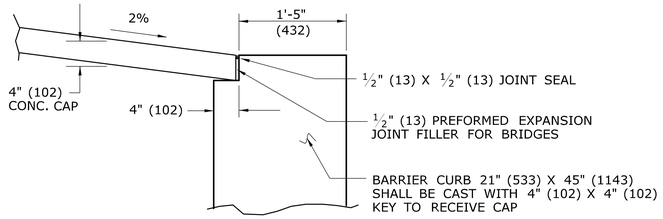

DETAIL B

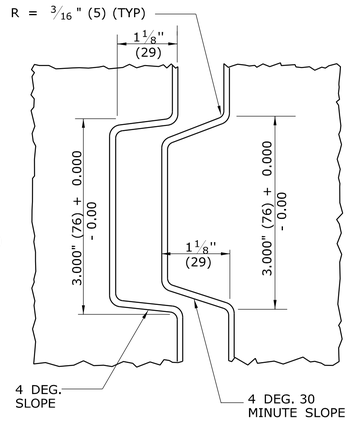

DETAIL A

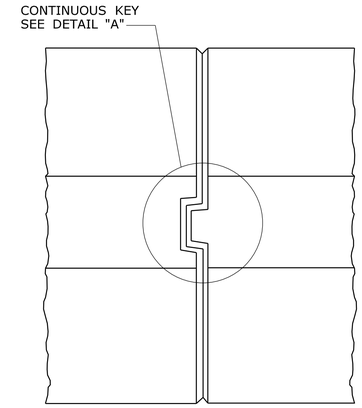

KEY CONNECTION AT ENDS PLAN

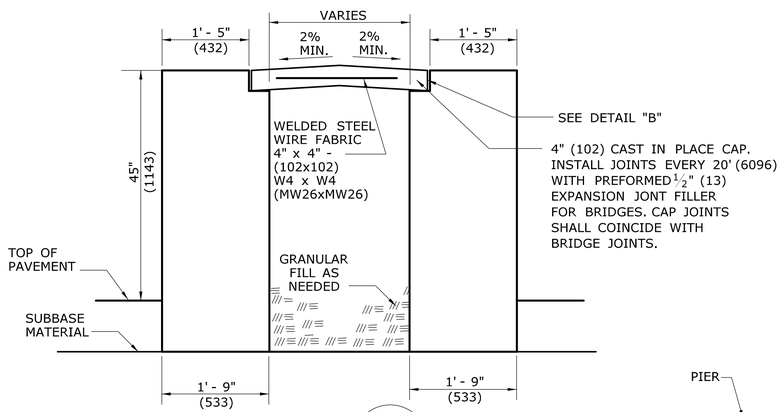

SECTION A

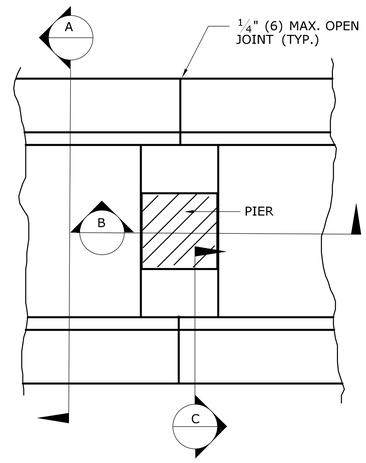

PLAN VIEW AT PIER

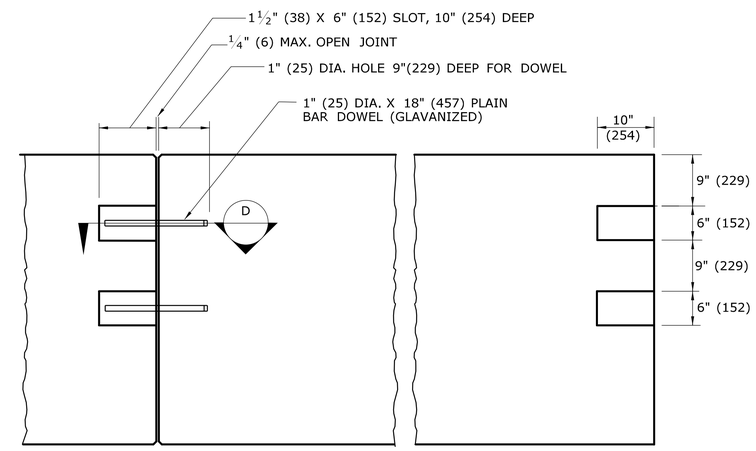

DOWEL CONNECTION AT ENDS ELEVATION VIEW

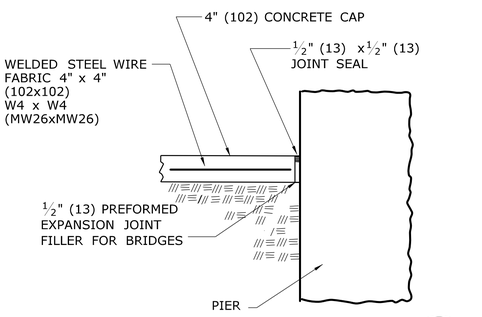

SECTION B

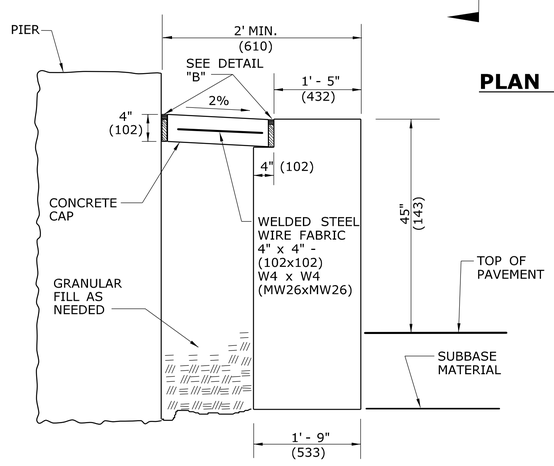

SECTION C

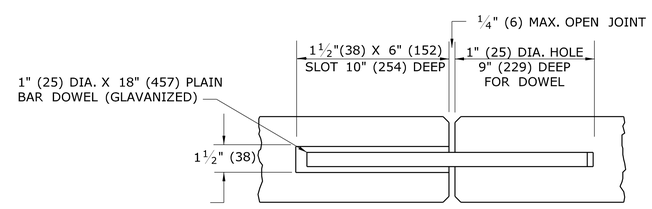

SECTION D

ALL METRIC DIMENSIONS ARE IN MILLIMETERS (mm) UNLESS OTHERWISE NOTED.

REV.	DATE	REVISION DESCRIPTION
-	-	-
-	-	-
-	-	-
-	-	-
-	-	-
-	-	-

THE INFORMATION, INCLUDING ESTIMATED QUANTITIES OF WORK, SHOWN ON THESE SHEETS IS BASED ON LIMITED INVESTIGATIONS BY THE STATE AND IS IN NO WAY WARRANTED TO INDICATE THE CONDITIONS OF ACTUAL QUANTITIES OF WORK WHICH WILL BE REQUIRED.

Plotted Date: 10/12/2010

NOT TO SCALE

STATE OF CONNECTICUT
DEPARTMENT OF TRANSPORTATION

Filename: CTDOT_HIGHWAY_STD_OCT2010.dgn Model: 26 -HW-821_01c

SUBMITTED BY: NAME/DATE/TIME:

APPROVED BY: NAME/DATE/TIME:

CTDOT STANDARD SHEET

OFFICE OF ENGINEERING

STANDARD SHEET TITLE:

TRANSITION OF 45" (1145) F-SHAPE TO 45" (1145) VERTICAL SHAPE SHEET 3

STANDARD SHEET NO.:

HW-821_01c

GENERAL NOTES:

1. GUIDERAIL ATTACHMENT WHEN REQUIRED SHALL BE CONSTRUCTED AS SHOWN ON THE PLANS OR AS DIRECTED BY THE ENGINEER.
2. WHEN ATTACHING GUIDERAIL, THE END OF THE PCBC SHALL NOT EXTEND VERTICALLY MORE THAN 3" (76) ABOVE THE RAIL HEIGHT FOR ALL LEADING END TREATMENTS. A 2.5:1 MAX. SLOPE OF THE BARRIER MAY BE USED TO ACCOMPLISH THIS.

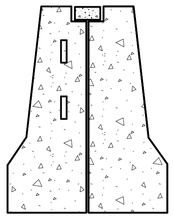

SECTION F - F

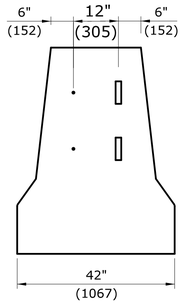

VIEW G (ROTATED)

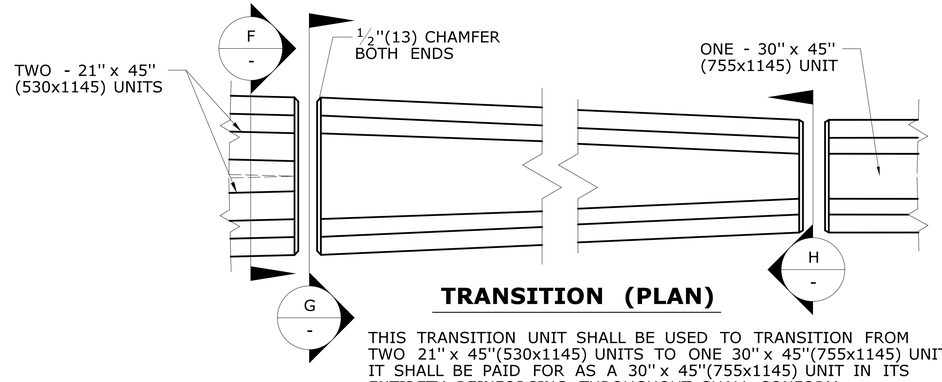

TRANSITION (PLAN)

THIS TRANSITION UNIT SHALL BE USED TO TRANSITION FROM TWO 21" x 45"(530x1145) UNITS TO ONE 30" x 45"(755x1145) UNIT. IT SHALL BE PAID FOR AS A 30" x 45"(755x1145) UNIT IN ITS ENTIRETY. REINFORCING THROUGHOUT SHALL CONFORM TO THAT OF A 30" x 45"(755x1145) UNIT.

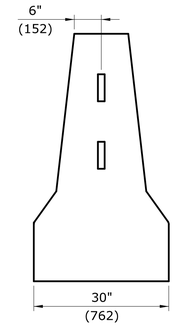

VIEW H (ROTATED)

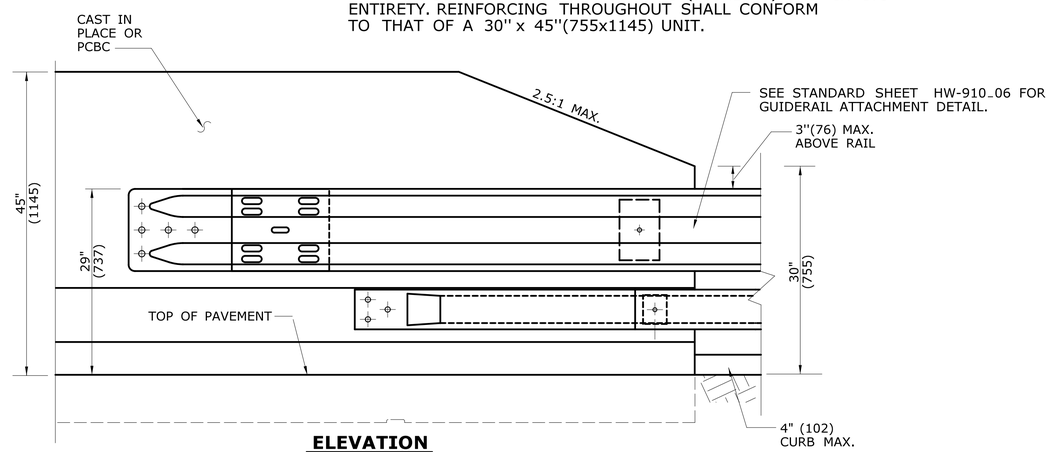

ELEVATION
CONCRETE BARRIER CURB UNIT
END TRANSITION TO GUIDERAIL

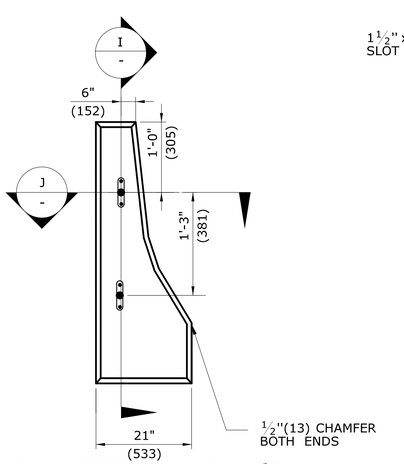

21" x 45"(530x1145) UNIT

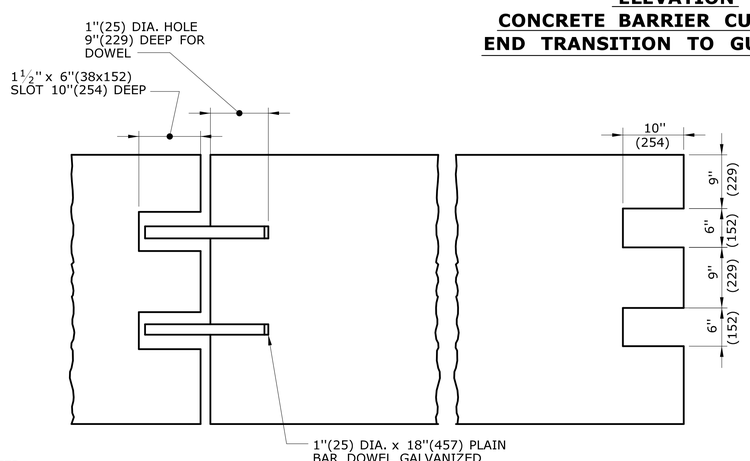

SECTION I - I / K - K

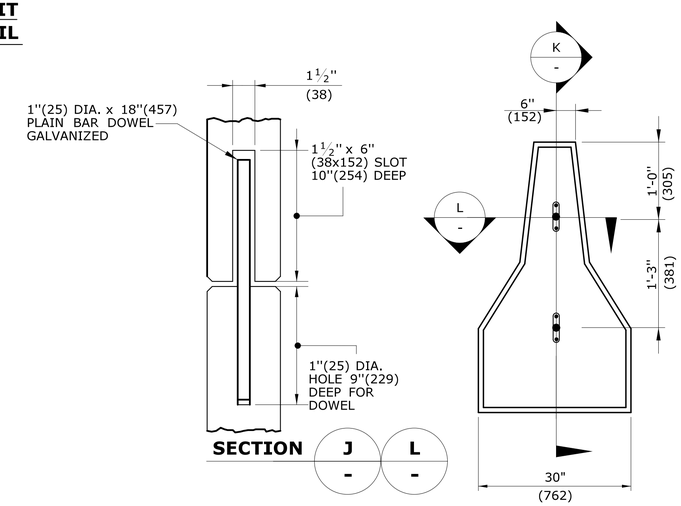

SECTION J - J / L - L

30" x 45"(755x1145) UNIT

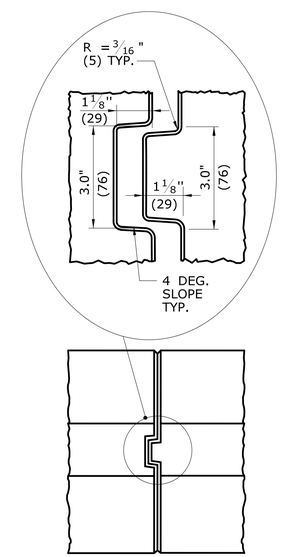

PLAN VIEW 30" x 45" (755x1145) UNIT ALTERNATE CONNECTION AT ENDS

ALL METRIC DIMENSIONS ARE IN MILLIMETERS (mm) UNLESS OTHERWISE NOTED

REV.	DATE	REVISION DESCRIPTION
1	5/13/10	REVISE GENERAL NOTE 2 AND ADD NOTE 3
2	1/12	ADD DETAIL FOR GUIDERAIL ATTACHMENT
3	7/13	ERRATA - REMOVE SECTION
-	-	-
-	-	-
-	-	-

THE INFORMATION, INCLUDING ESTIMATED QUANTITIES OF WORK, SHOWN ON THESE SHEETS IS BASED ON LIMITED INVESTIGATIONS BY THE STATE AND IS IN NO WAY WARRANTED TO INDICATE THE CONDITIONS OF ACTUAL QUANTITIES OF WORK WHICH WILL BE REQUIRED.

Plotted Date: 6/14/2013

NOT TO SCALE

STATE OF CONNECTICUT
DEPARTMENT OF TRANSPORTATION

Filename: CTDOT_HIGHWAY_STD2013.dgn Model: 28 - HW-821_02b

SUBMITTED BY: NAME/DATE/TIME:

APPROVED BY: NAME/DATE/TIME:

CTDOT STANDARD SHEET

OFFICE OF ENGINEERING

STANDARD SHEET TITLE:

45" (1145) F- SHAPE PRECAST CONCRETE BARRIER CURB

STANDARD SHEET NO.:

HW-821_02b

GENERAL NOTE:

1. MINIMUM SPLICE LENGTH FOR ALL BARS IS 1'-9" (534)

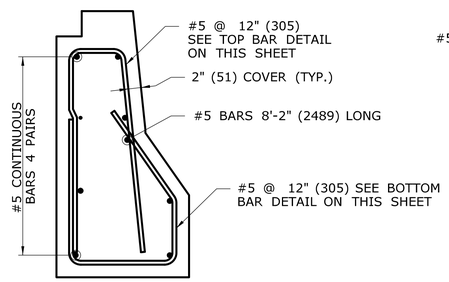

SECTION - BAR 1 (1 / S-1)

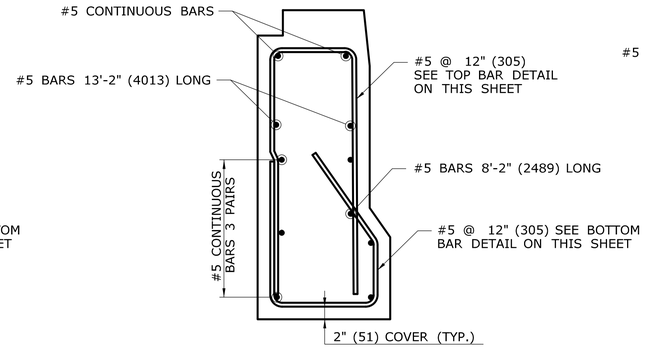

SECTION - BAR 9 (2 / S-1)

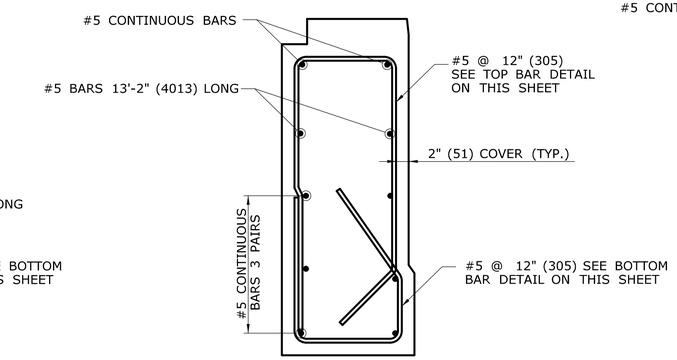

SECTION - BAR 14 (3 / S-1)

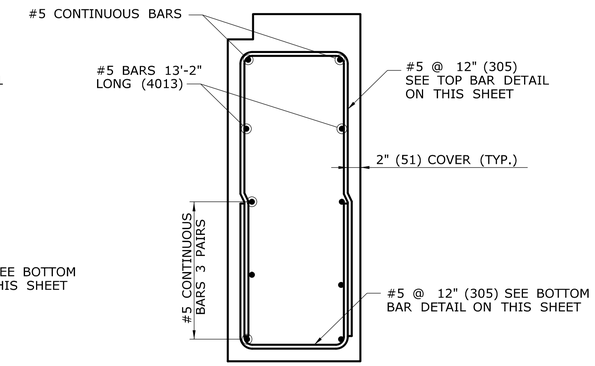

SECTION - BAR 16 (4 / S-1)

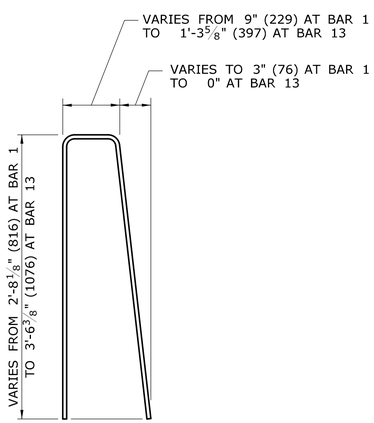

TOP BARS
BARS 1 TO 13

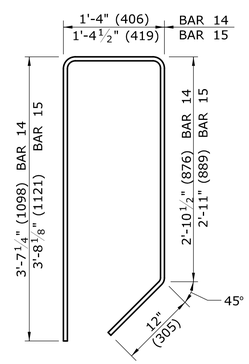

TOP BARS
BARS 14 AND 15

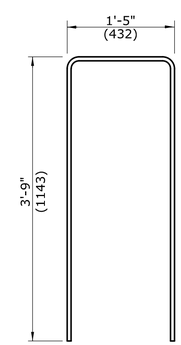

TOP BARS
BARS 16 TO 21

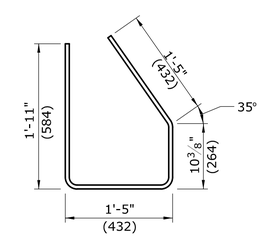

BOTTOM BARS
BARS 1 TO 15

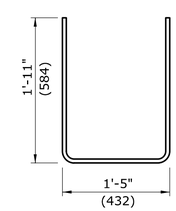

BOTTOM BARS
BARS 16 TO 21

ALL METRIC DIMENSIONS ARE IN MILLIMETERS (mm) UNLESS OTHERWISE NOTED. REVISED 12/21/09

REV.	DATE	REVISION DESCRIPTION
-	-	-
-	-	-
-	-	-
-	-	-
-	-	-
-	-	-

THE INFORMATION, INCLUDING ESTIMATED QUANTITIES OF WORK, SHOWN ON THESE SHEETS IS BASED ON LIMITED INVESTIGATIONS BY THE STATE AND IS IN NO WAY WARRANTED TO INDICATE THE CONDITIONS OF ACTUAL QUANTITIES OF WORK WHICH WILL BE REQUIRED.

Plotted Date: 10/12/2010

NOT TO SCALE

STATE OF CONNECTICUT
DEPARTMENT OF TRANSPORTATION

Filename: CTDOT_HIGHWAY_STD_OCT2010.dgn Model: 29 - HW-821_03b

SUBMITTED BY: NAME/DATE/TIME:

APPROVED BY: NAME/DATE/TIME:

CTDOT
STANDARD SHEET

OFFICE OF ENGINEERING

STANDARD SHEET TITLE:

TRANSITION - 32" (813) JERSEY SHAPE TO 45" (1145) VERTICAL SHAPE SHEET 2

STANDARD SHEET NO.:

HW-821_03b

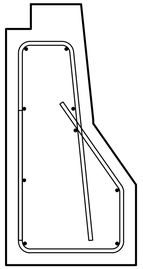

BAR 1

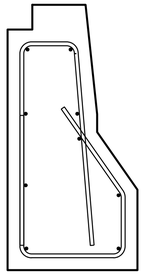

BAR 2

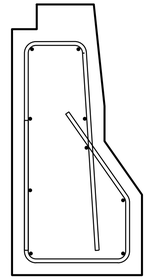

BAR 3

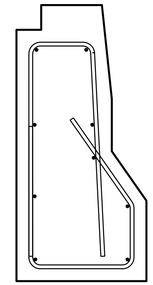

BAR 4

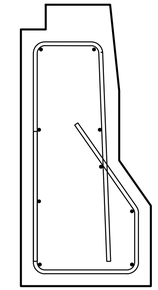

BAR 5

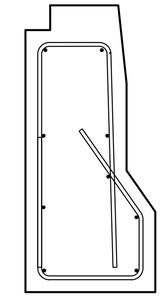

BAR 6

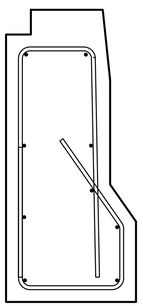

BAR 7

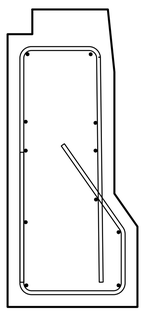

BAR 8

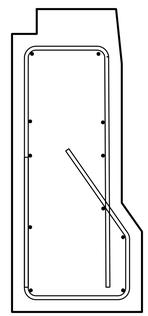

BAR 9

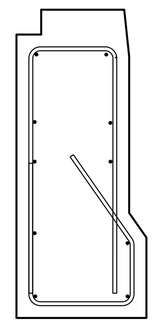

BAR 10

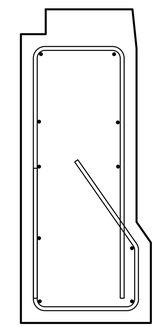

BAR 11

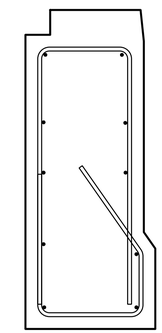

BAR 12

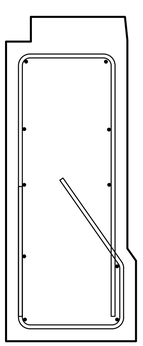

BAR 13

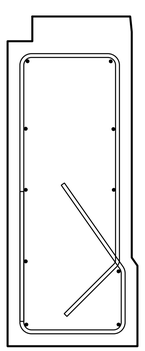

BAR 14

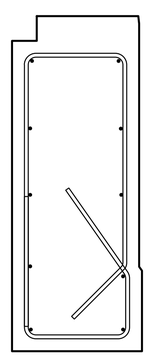

BAR 15

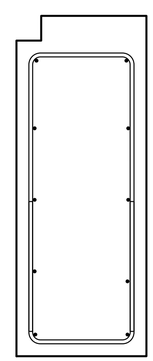

BAR 16

ALL METRIC DIMENSIONS ARE IN MILLIMETERS (mm) UNLESS OTHERWISE NOTED. REVISED 12/21/09

REV.	DATE	REVISION DESCRIPTION
-	-	-
-	-	-
-	-	-
-	-	-
-	-	-
-	-	-

THE INFORMATION, INCLUDING ESTIMATED QUANTITIES OF WORK, SHOWN ON THESE SHEETS IS BASED ON LIMITED INVESTIGATIONS BY THE STATE AND IS IN NO WAY WARRANTED TO INDICATE THE CONDITIONS OF ACTUAL QUANTITIES OF WORK WHICH WILL BE REQUIRED.

Plotted Date: 10/12/2010

NOT TO SCALE

STATE OF CONNECTICUT
DEPARTMENT OF TRANSPORTATION

Filename: CTDOT_HIGHWAY_STD_OCT2010.dgn Model: 30 - HW-821_03c

SUBMITTED BY: NAME/DATE/TIME:

APPROVED BY: NAME/DATE/TIME:

CTDOT
STANDARD SHEET

OFFICE OF ENGINEERING

STANDARD SHEET TITLE:

TRANSITION 32" (813) JERSEY SHAPE TO 45" (1145) VERTICAL SHAPE SHEET 3

STANDARD SHEET NO.:

HW-821_03c

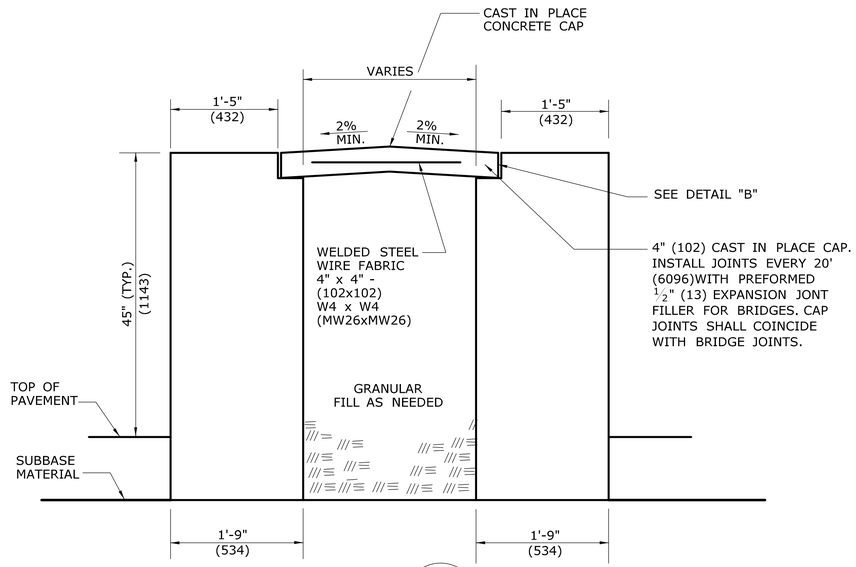

SECTION A

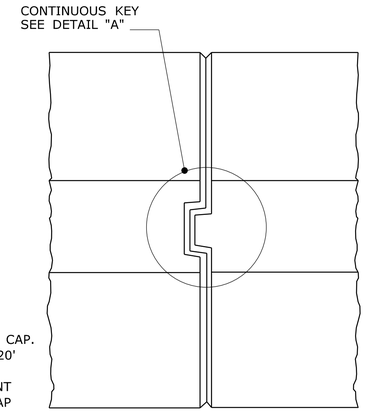

KEY CONNECTION AT ENDS PLAN VIEW

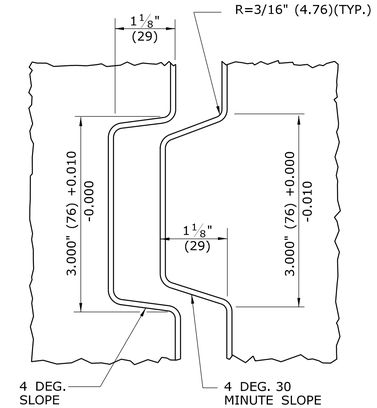

DETAIL A

GENERAL NOTES:

1. ALTERNATE DESIGNS FOR UNIT END CONNECTIONS SIMILAR TO THE DESIGNS SHOWN MAY BE SUBMITTED TO THE ENGINEER FOR APPROVAL.
2. TERMINAL END TREATMENTS SHALL BE CONSTRUCTED AS SHOWN ON THE PLANS OR AS DIRECTED BY THE ENGINEER.
3. THE CONCRETE CAP, JOINT SEAL, JOINT FILLER FOR BRIDGES, AND WELDED STEEL WIRE FABRIC SHALL BE PAID FOR AS PART OF CLASS "A" CONCRETE.

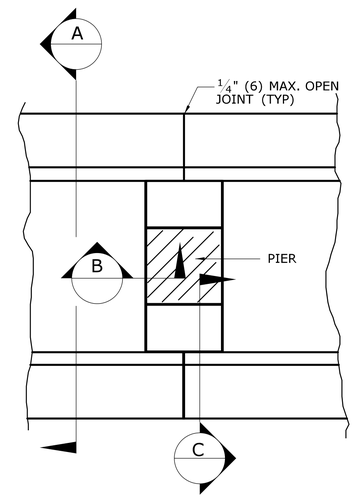

PLAN VIEW AT PIER

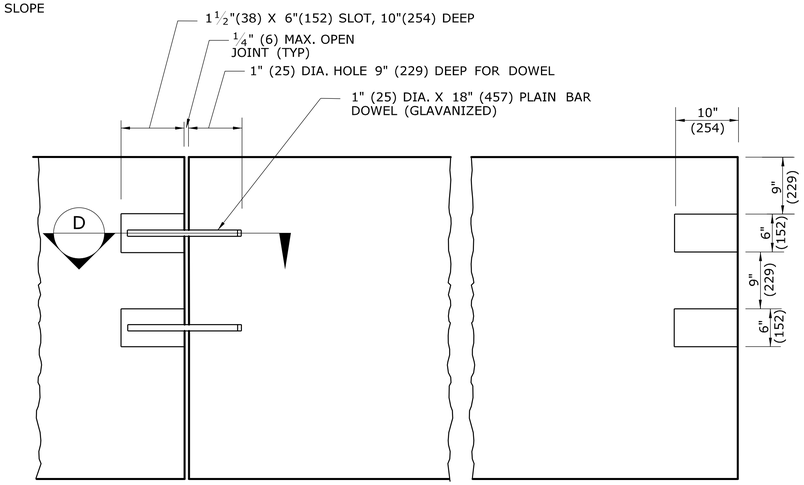

DOWEL CONNECTION AT ENDS ELEVATION VIEW

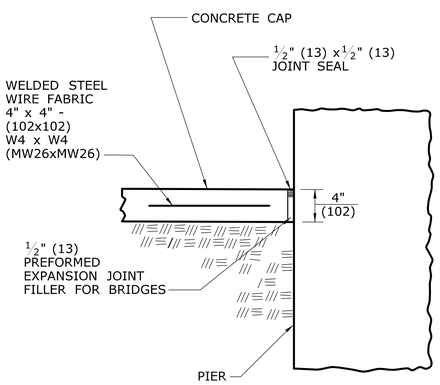

SECTION B

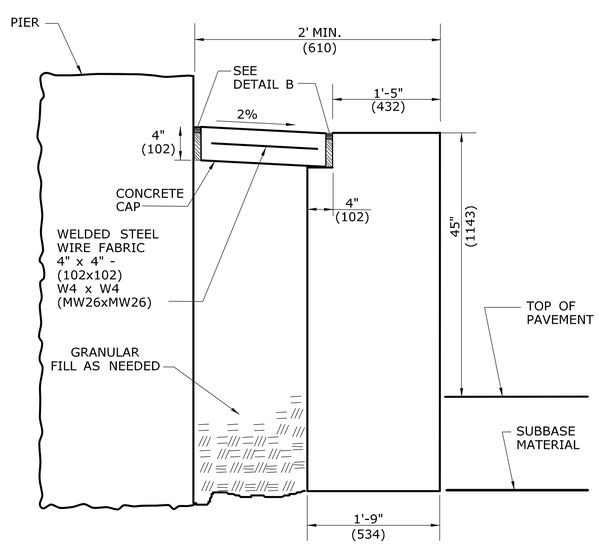

SECTION C

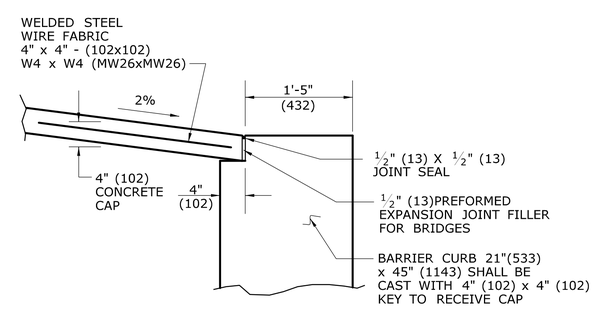

DETAIL B

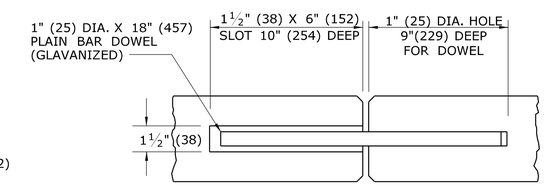

SECTION D

ALL METRIC DIMENSIONS ARE IN MILLIMETERS (mm) UNLESS OTHERWISE NOTED.

REV.	DATE	REVISION DESCRIPTION
-	-	-
-	-	-
-	-	-
-	-	-
-	-	-
-	-	-

THE INFORMATION, INCLUDING ESTIMATED QUANTITIES OF WORK, SHOWN ON THESE SHEETS IS BASED ON LIMITED INVESTIGATIONS BY THE STATE AND IS IN NO WAY WARRANTED TO INDICATE THE CONDITIONS OF ACTUAL QUANTITIES OF WORK WHICH WILL BE REQUIRED.

Plotted Date: 10/12/2010

NOT TO SCALE

STATE OF CONNECTICUT
DEPARTMENT OF TRANSPORTATION

Filename: CTDOT_HIGHWAY_STD_OCT2010.dgn Model: 31 - HW-821_03d

SUBMITTED BY: NAME/DATE/TIME:

APPROVED BY: NAME/DATE/TIME:

CTDOT
STANDARD SHEET

OFFICE OF ENGINEERING

STANDARD SHEET TITLE:

TRANSITION - 32" (813) JERSEY SHAPE TO 45" (1145) VERTICAL SHAPE SHEET 4

STANDARD SHEET NO.:

HW-821_03d

GENERAL NOTES

1. ALTERNATE DESIGNS FOR THE LIFTING KEYS OR OTHER HANDLING DEVICES MAY BE SUBMITTED TO THE ENGINEER FOR APPROVAL.
2. SEE SHEET HW-821 03b & c FOR REINFORCING BARS NOT SHOWN.
3. FOR CONNECTION DETAILS SEE SHEET HW-821_07.
4. PRECAST UNITS SHALL BE COATED WITH PENETRATING SEALER.
5. THE FIRST AND LAST SECTIONS OF BARRIER SHALL NOT HAVE EXPOSED PROTRUDING DOWELS.

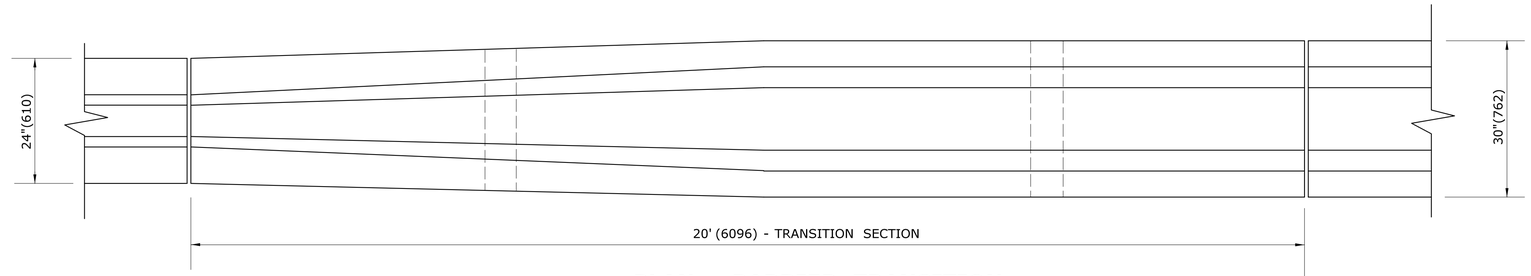

PLAN - BARRIER TRANSITION

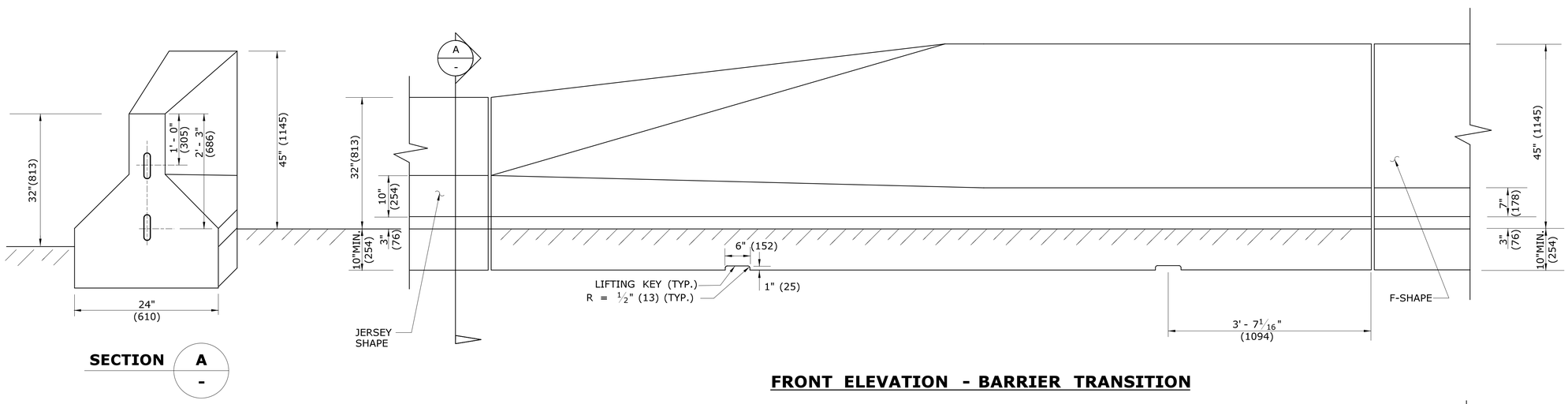

FRONT ELEVATION - BARRIER TRANSITION

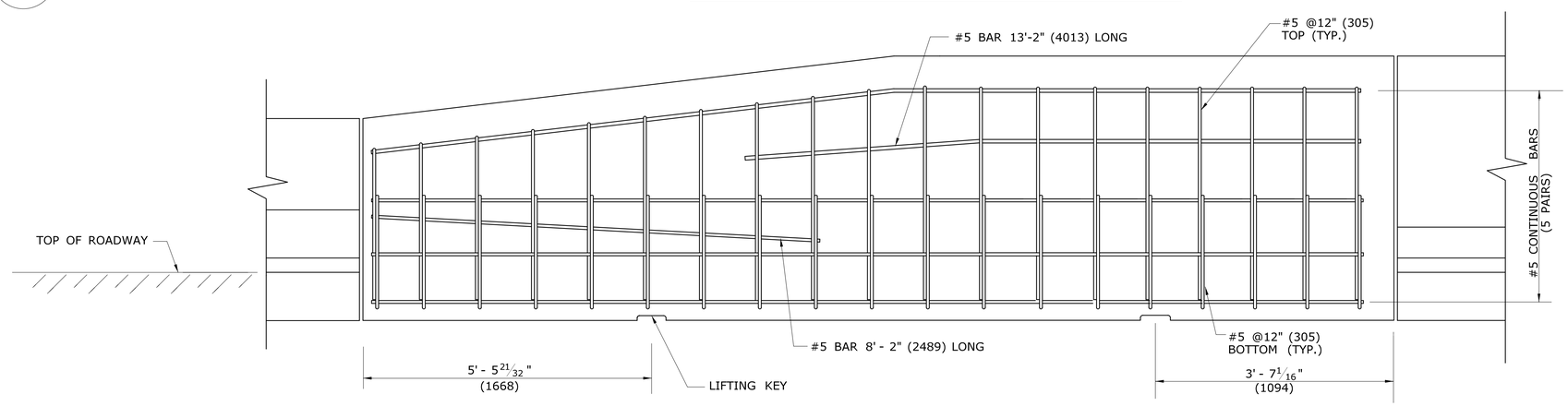

FRONT ELEVATION - TRANSITION BARRIER REINFORCEMENT

REV.	DATE	REVISION DESCRIPTION

THE INFORMATION, INCLUDING ESTIMATED QUANTITIES OF WORK, SHOWN ON THESE SHEETS IS BASED ON LIMITED INVESTIGATIONS BY THE STATE AND IS IN NO WAY WARRANTED TO INDICATE THE CONDITIONS OF ACTUAL QUANTITIES OF WORK WHICH WILL BE REQUIRED.

Plotted Date: 6/14/2013

NOT TO SCALE

STATE OF CONNECTICUT
DEPARTMENT OF TRANSPORTATION

Filename: CTDOT_HIGHWAY_STD2013.dgn Model: 33 - HW-821_03e

SUBMITTED BY: NAME/DATE/TIME:

APPROVED BY: NAME/DATE/TIME:

CTDOT STANDARD SHEET

OFFICE OF ENGINEERING

STANDARD SHEET TITLE:

TRANSITION 32" (813) JERSEY SHAPE TO 45" (1145) F-SHAPE

STANDARD SHEET NO.:

HW-821_03e

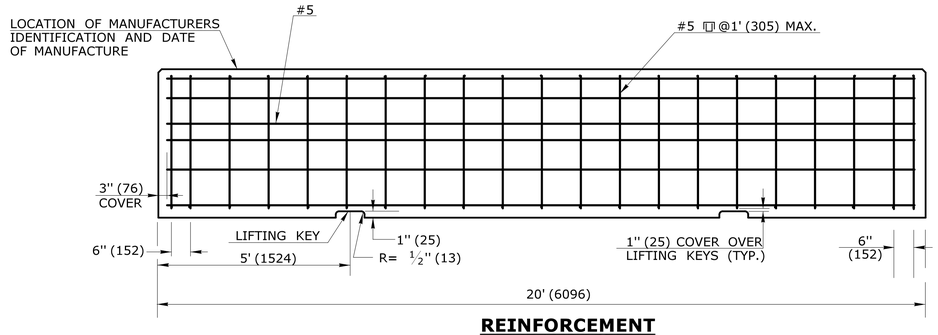

REINFORCEMENT ELEVATION

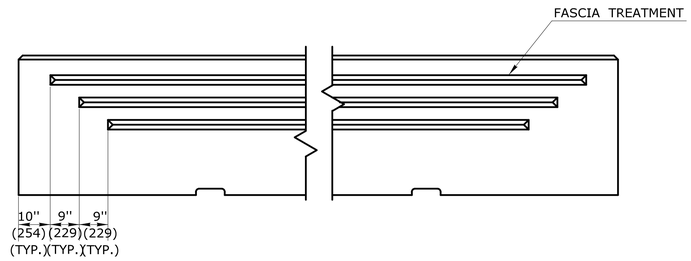

PARTIAL ELEVATION FASCIA TREATMENT

GENERAL NOTES:

1. ALTERNATE DESIGN FOR THE FOLLOWING MAY BE SUBMITTED TO THE ENGINEER FOR APPROVAL:
   a. UNIT END CONNECTIONS SIMILAR TO THE DESIGN SHOWN.
   b. LIFTING HOLES, KEYS OR OTHER HANDLING DEVICES.
2. PRECAST UNITS SHALL BE COATED WITH A PENETRATING SEALER.
3. REINFORCING SHALL BE UNCOATED AND CONFORM TO ASTM A615, GRADE 60.(420)
4. CONCRETE SHALL HAVE A MINIMUM 28 DAY STRENGTH (f'c) = 4,000 PSI. (28 MPa)
5. DOWELS SHALL CONFORM TO ASTM A36 AND BE GALVANIZED IN ACCORDANCE WITH ASTM A123.
6. THE FIRST AND LAST SECTIONS IN A RUN OF MERRITT PARKWAY BARRIER SHALL NOT HAVE EXPOSED PROTRUDING DOWELS.
7. TERMINAL END TREATMENTS SHALL BE CONSTRUCTED AS SHOWN ON THE PLANS OR AS DIRECTED BY THE ENGINEER.
8. SEE HW-910_12c FOR MERRITT PARKWAY GUIDERAIL ATTACHMENT TO BARRIER DETAILS.

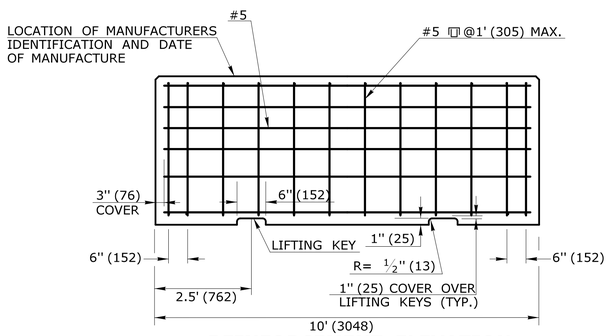

REINFORCEMENT ELEVATION

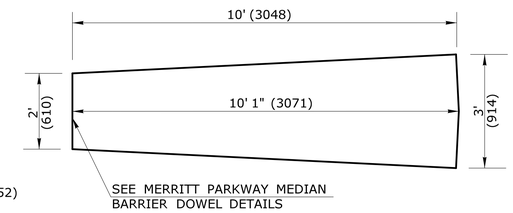

PLAN

MERRITT PARKWAY MEDIAN BARRIER TRANSITION SECTION

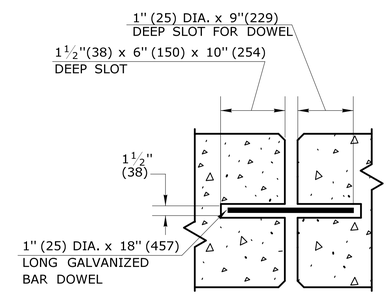

SECTION A -

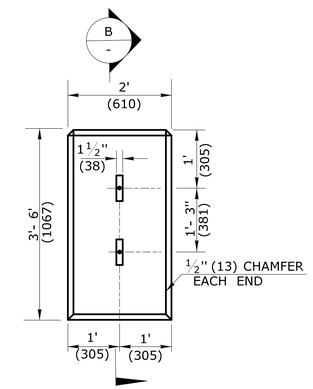

END VIEW

MERRITT PARKWAY MEDIAN BARRIER

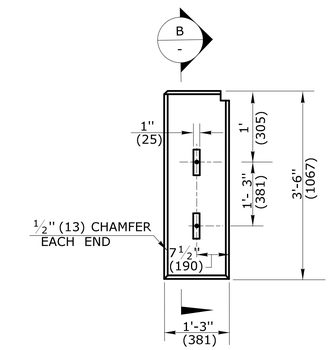

END VIEW

MERRITT PARKWAY ROADSIDE BARRIER

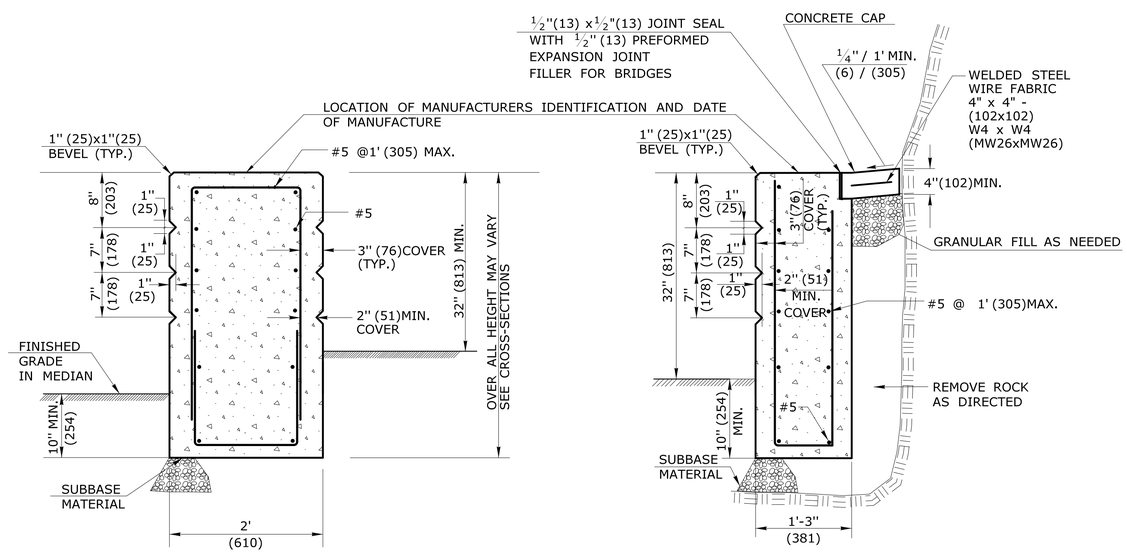

MERRITT PARKWAY MEDIAN BARRIER

MERRITT PARKWAY ROADSIDE BARRIER

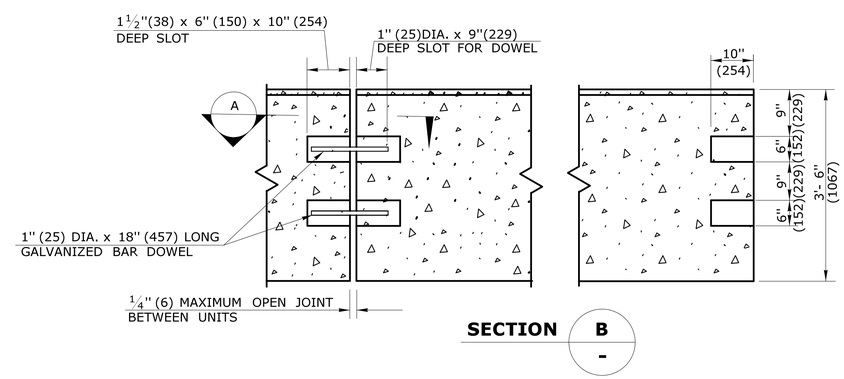

SECTION B -

DOWEL DETAILS AT END OF BARRIER

ALL METRIC DIMENSIONS ARE IN MILLIMETERS (mm) UNLESS OTHERWISE NOTED.

REV.	DATE	REVISION DESCRIPTION	
1	6/11	REVISED EMBEDMENT DEPTH	-
2	7/13	ADDED A 10' SECTION & TRANSITION SECTION	-
-	-	-	-
-	-	-	-
-	-	-	-
-	-	-	-

THE INFORMATION, INCLUDING ESTIMATED QUANTITIES OF WORK, SHOWN ON THESE SHEETS IS BASED ON LIMITED INVESTIGATIONS BY THE STATE AND IS IN NO WAY WARRANTED TO INDICATE THE CONDITIONS OF ACTUAL QUANTITIES OF WORK WHICH WILL BE REQUIRED.

Plotted Date: 6/11/2013

NOT TO SCALE

STATE OF CONNECTICUT
DEPARTMENT OF TRANSPORTATION

Filename: CTDOT_HIGHWAY_STD2013.dgn Model: 35- HW-821_04b

SUBMITTED BY: NAME/DATE/TIME:

APPROVED BY: NAME/DATE/TIME:

CTDOT STANDARD SHEET

OFFICE OF ENGINEERING

STANDARD SHEET TITLE:

MERRITT PARKWAY 2' (610) WIDE MEDIAN BARRIER AND ROADSIDE BARRIER

STANDARD SHEET NO.:

HW-821_04b

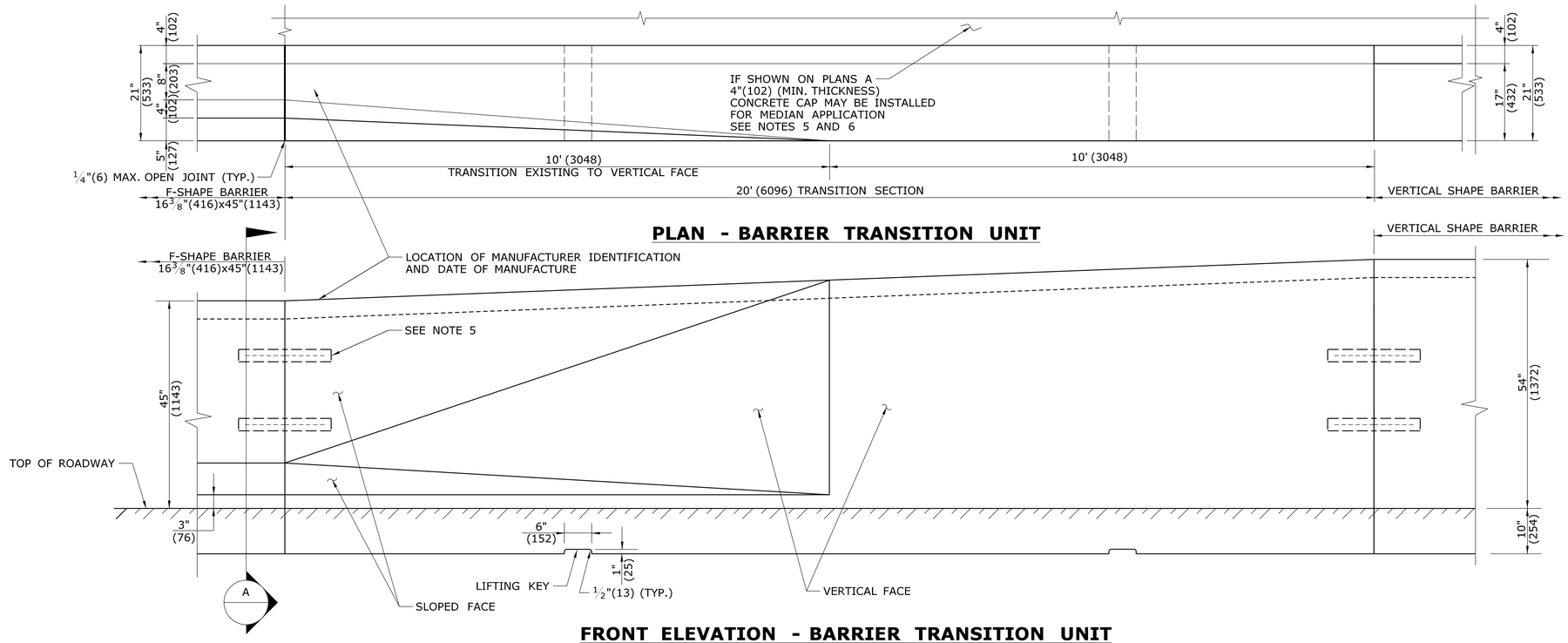

GENERAL NOTES:

1. ALTERNATE DESIGNS FOR THE LIFTING KEYS OR OTHER HANDLING DEVICES MAY BE SUBMITTED TO THE ENGINEER FOR APPROVAL.
2. SEE TRANSITION SHEET 2 FOR REINFORCING BAR DETAILS.
3. SEE HIGHWAY PLANS FOR LOCATIONS.
4. THE JOINT SEAL, JOINT FILLER FOR BRIDGES AND WELDED STEEL WIRE FABRIC SHALL BE PAID FOR UNDER CLASS A CONCRETE.
5. FOR DETAILS OF END CONNECTION, KEY CONNECTIONS, DOWEL DETAILS, AND CONCRETE CAP SEE HW-821_07.
6. THE BARRIER TRANSITION UNIT WILL BE PAID UNDER ITEM F-SHAPED PRECAST CONCRETE BARRIER CURB 21" x 45" (533 x 1143), COMPLETE AND IN PLACE.
7. PRECAST UNITS SHALL BE COATED WITH PENETRATING SEALER.
8. THE FIRST AND LAST SECTIONS OF BARRIER SHALL NOT HAVE EXPOSED PROTRUDING DOWELS.

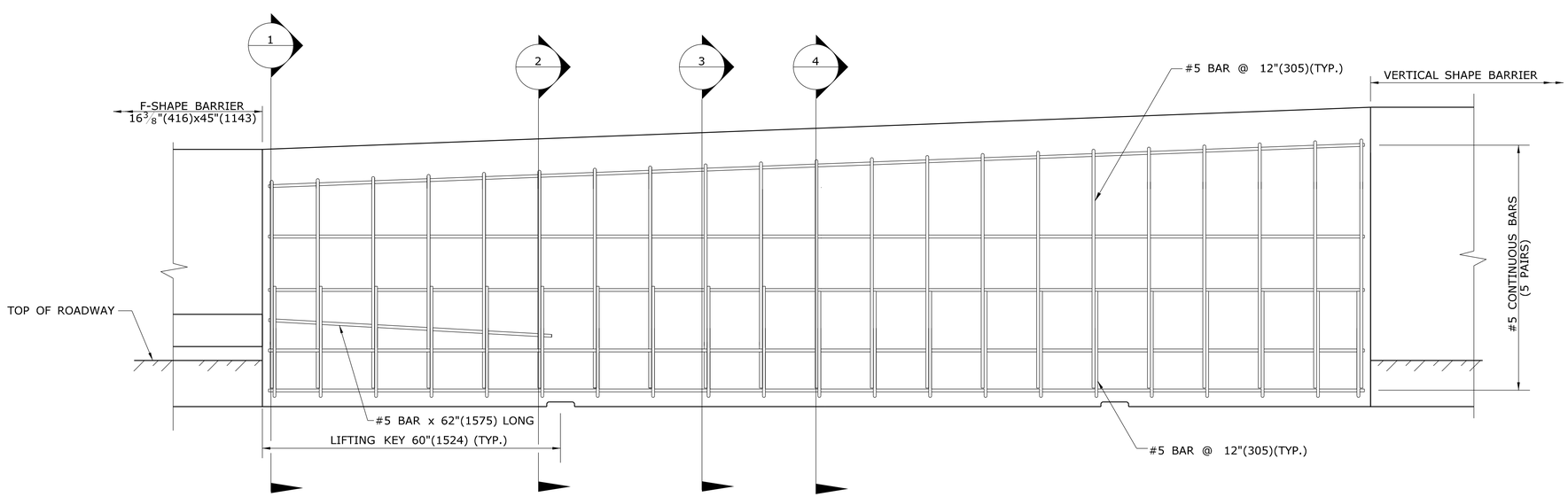

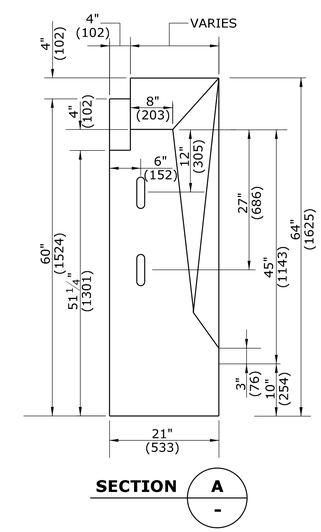

ALL METRIC DIMENSIONS ARE IN MILLIMETERS (mm) UNLESS OTHERWISE NOTED.

REV.	DATE	REVISION DESCRIPTION
-	-	-
-	-	-
-	-	-
-	-	-
-	-	-
-	-	-

THE INFORMATION, INCLUDING ESTIMATED QUANTITIES OF WORK, SHOWN ON THESE SHEETS IS BASED ON LIMITED INVESTIGATIONS BY THE STATE AND IS IN NO WAY WARRANTED TO INDICATE THE CONDITIONS OF ACTUAL QUANTITIES OF WORK WHICH WILL BE REQUIRED.

Plotted Date: 1/9/2012

NOT TO SCALE

STATE OF CONNECTICUT
DEPARTMENT OF TRANSPORTATION

Filename: Jan2012.dgn Model: HW-821_05a

SUBMITTED BY: NAME/DATE/TIME:

APPROVED BY: NAME/DATE/TIME:

CTDOT STANDARD SHEET

OFFICE OF ENGINEERING

STANDARD SHEET TITLE:

TRANSITION 45" (1145) F- SHAPE TO 54" (1372) VERTICAL SHAPE
SHEET 1

STANDARD SHEET NO.:

HW-821_05a

GENERAL NOTES:

NOTE: MINIMUM SPLICE LENGTH FOR ALL BARS IS 21" (530).

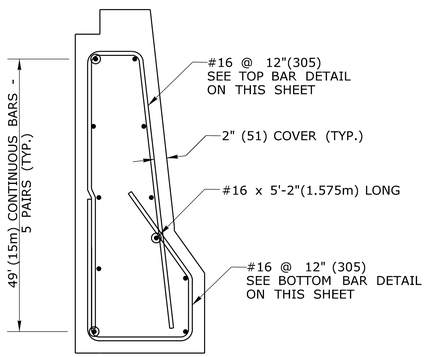

SECTION - BAR 1 (1)

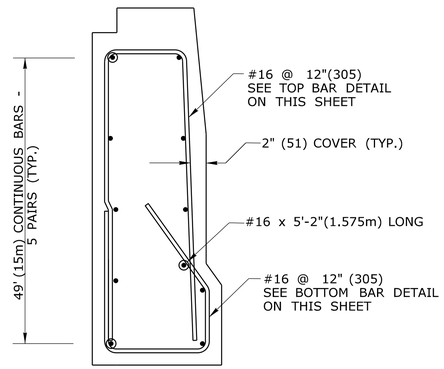

SECTION - BAR 6 (2)

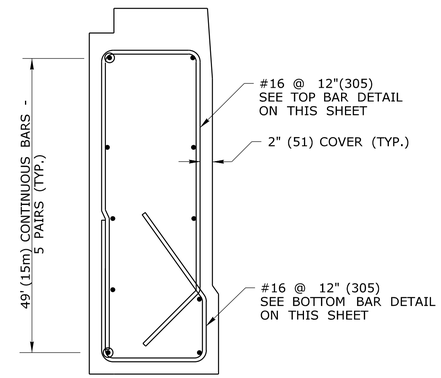

SECTION - BAR 9 (3)

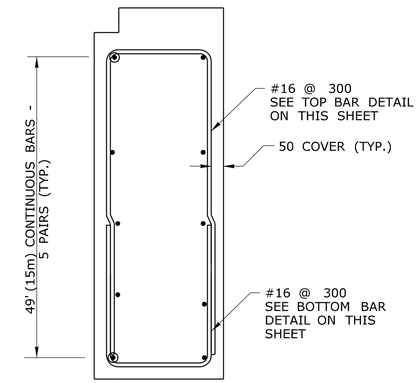

SECTION - BAR 11 (4)

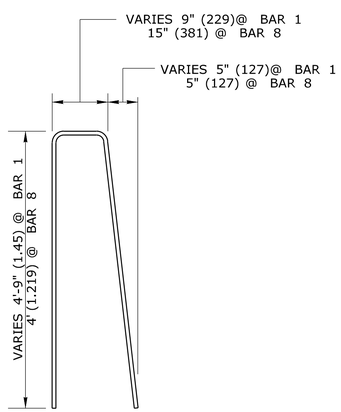

TOP BARS
BARS 1 TO 8

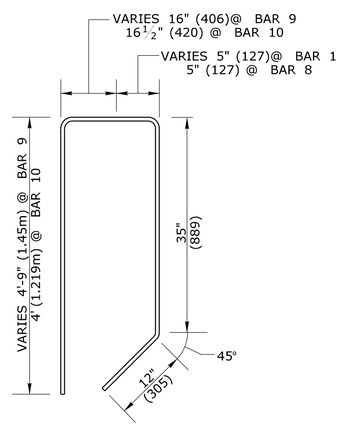

TOP BARS
BARS 9 AND 10

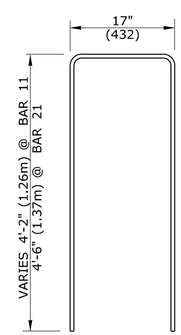

TOP BARS
BARS 11 TO 21

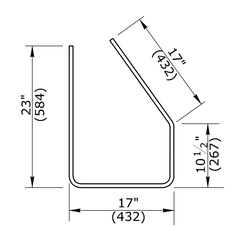

BOTTOM BARS
BARS 1 TO 10

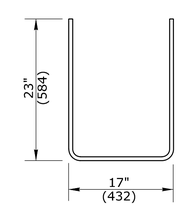

BOTTOM BARS
BARS 11 TO 21

ALL METRIC DIMENSIONS ARE IN MILLIMETERS (mm) UNLESS OTHERWISE NOTED.

REV.	DATE	REVISION DESCRIPTION
-	-	-
-	-	-
-	-	-
-	-	-
-	-	-
-	-	-

THE INFORMATION, INCLUDING ESTIMATED QUANTITIES OF WORK, SHOWN ON THESE SHEETS IS BASED ON LIMITED INVESTIGATIONS BY THE STATE AND IS IN NO WAY WARRANTED TO INDICATE THE CONDITIONS OF ACTUAL QUANTITIES OF WORK WHICH WILL BE REQUIRED.

Plotted Date: 11/16/2011

NOT TO SCALE

STATE OF CONNECTICUT
DEPARTMENT OF TRANSPORTATION

Filename: working_revisions.dgn Model: HW-821_05b

SUBMITTED BY: NAME/DATE/TIME:

APPROVED BY: NAME/DATE/TIME:

CTDOT STANDARD SHEET

OFFICE OF ENGINEERING

STANDARD SHEET TITLE:

TRANSITION UNIT 45" F-SHAPE TO 54" VERTICAL SHAPE SHEET 2

STANDARD SHEET NO.:

HW-821_05b

GENERAL NOTES:

1. ALTERNATE DESIGNS FOR THE LIFTING KEYS OR OTHER HANDLING DEVICES MAY BE SUBMITTED TO THE ENGINEER FOR APPROVAL.
2. SEE HIGHWAY PLANS FOR LOCATIONS.
3. THE JOINT SEAL AND JOINT FILLER FOR BRIDGES SHALL BE PAID FOR UNDER CLASS A CONCRETE.
4. FOR DETAILS OF END CONNECTION, KEY CONNECTIONS, DOWEL DETAILS, AND CONCRETE CAP SEE HW-821_07.
5. THE 54" (1372) VERTICAL SHAPE BARRIER UNIT WILL BE PAID UNDER ITEM VERTICAL FACE PRECAST CONCRETE BARRIER CURB 21" x 54"(533x1372), COMPLETE AND IN PLACE.
6. PRECAST UNITS SHALL BE COATED WITH PENETRATING SEALER.
7. THE FIRST AND LAST SECTIONS OF BARRIER SHALL NOT HAVE EXPOSED PROTRUDING DOWELS.

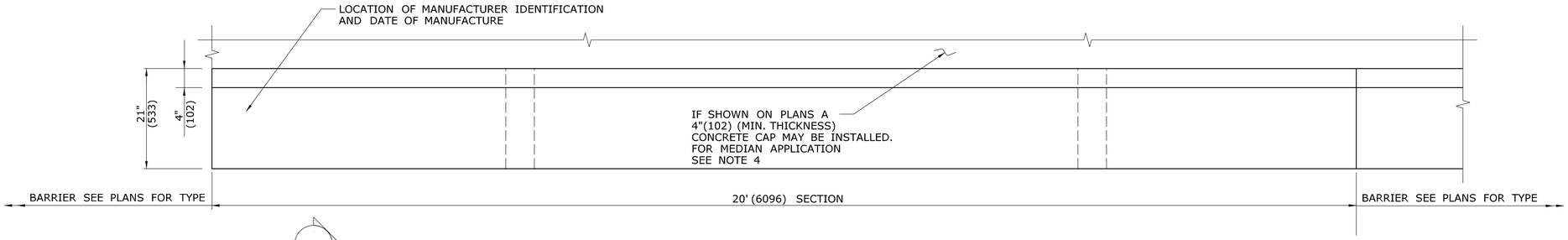

PLAN - 54" (1372) VERTICAL SHAPE BARRIER UNIT

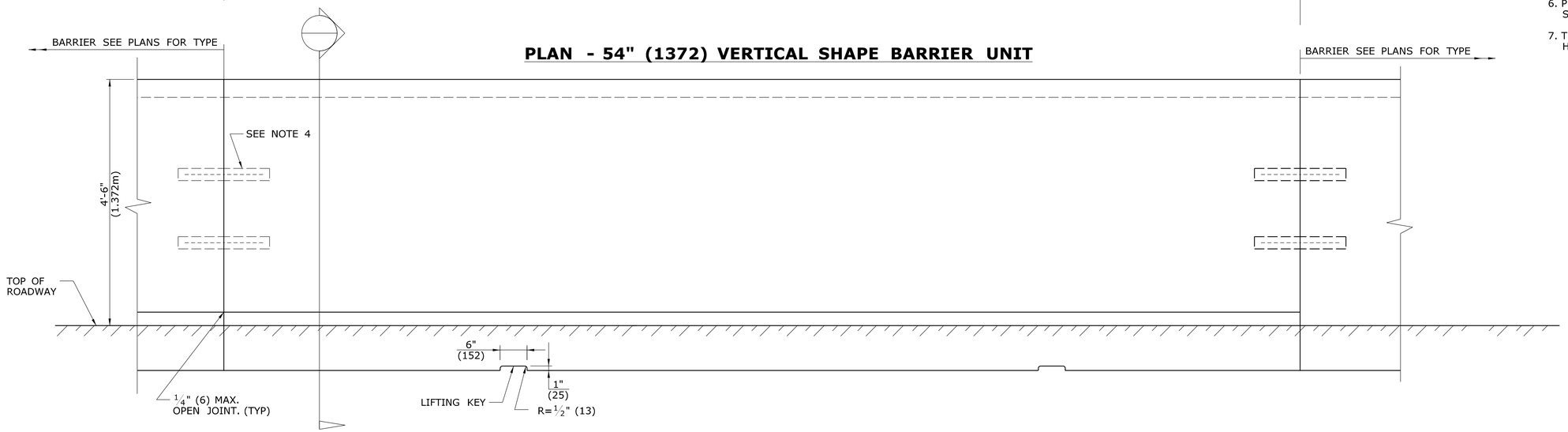

FRONT ELEVATION - 54" (1372) VERTICAL SHAPE BARRIER UNIT

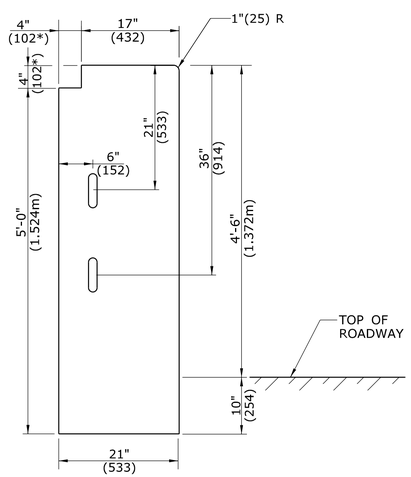

SECTION A

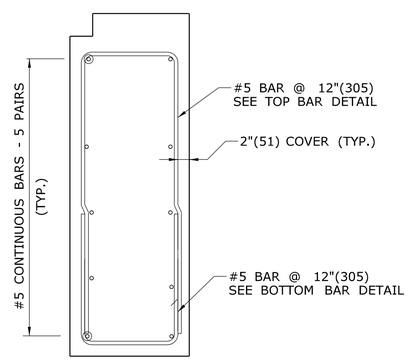

SECTION

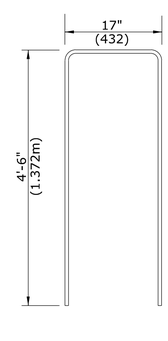

TOP BARS

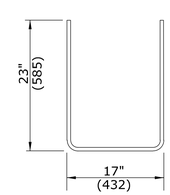

BOTTOM BARS

54" (1372) VERTICAL BARRIER UNIT REINFORCEMENT

* VERTICAL FACE PRECAST CONCRETE BARRIER CURB 21"x54"(533x1372) SHALL BE CAST WITH A 4"(102) BY 4"(100) KEY TO RECEIVE CONCRETE CAP

ALL METRIC DIMENSIONS ARE IN MILLIMETERS (mm) UNLESS OTHERWISE NOTED.

REV.	DATE	REVISION DESCRIPTION
-	-	-
-	-	-
-	-	-
-	-	-
-	-	-
-	-	-

THE INFORMATION, INCLUDING ESTIMATED QUANTITIES OF WORK, SHOWN ON THESE SHEETS IS BASED ON LIMITED INVESTIGATIONS BY THE STATE AND IS IN NO WAY WARRANTED TO INDICATE THE CONDITIONS OF ACTUAL QUANTITIES OF WORK WHICH WILL BE REQUIRED.

Plotted Date: 1/31/2012

NOT TO SCALE

STATE OF CONNECTICUT
DEPARTMENT OF TRANSPORTATION

Filename: CTDOT_HIGHWAY_STD-2012.dgn Model: 36a - HW-0821_06

SUBMITTED BY: NAME/DATE/TIME:

APPROVED BY: NAME/DATE/TIME:

CTDOT STANDARD SHEET

OFFICE OF ENGINEERING

STANDARD SHEET TITLE:

54" (1372) VERTICAL SHAPE BARRIER

STANDARD SHEET NO.:

HW-821_06

GENERAL NOTES:

1. ALTERNATE DESIGNS FOR UNIT END CONNECTIONS SIMILAR TO THE DESIGNS SHOWN MAY BE SUBMITTED TO THE ENGINEER FOR APPROVAL.
2. TERMINAL END TREATMENTS SHALL BE CONSTRUCTED AS SHOWN ON THE PLANS OR AS DIRECTED BY THE ENGINEER.
3. THE JOINT SEAL, JOINT FILLER FOR BRIDGES, AND WELDED STEEL WIRE FABRIC SHALL BE PAID FOR AS PART OF CLASS "A" CONCRETE.

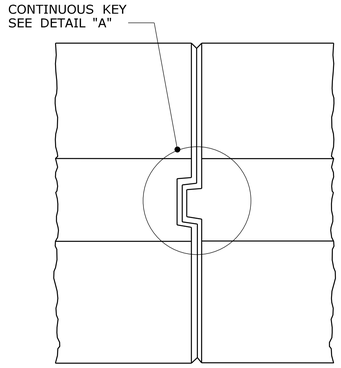

KEY CONNECTION AT ENDS PLAN VIEW

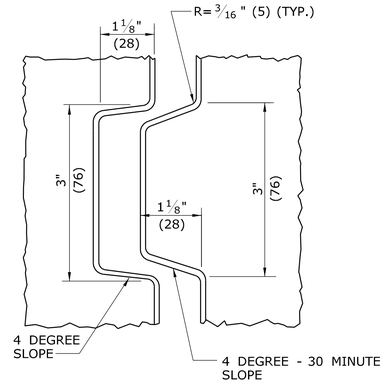

DETAIL "A"

SEE NOTE 1.

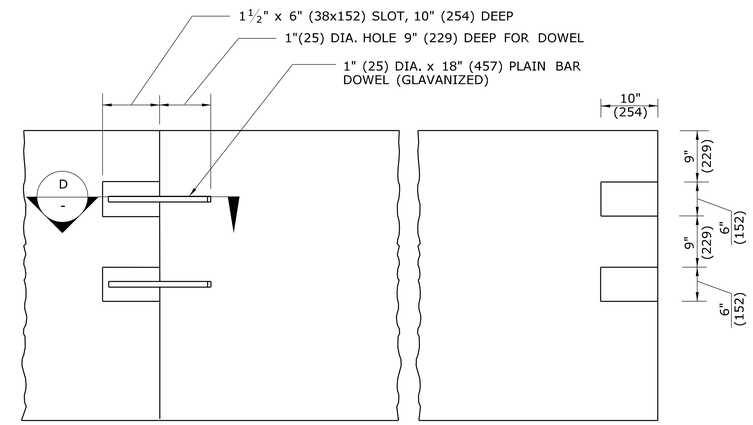

DOWEL CONNECTION AT ENDS PROFILE VIEW

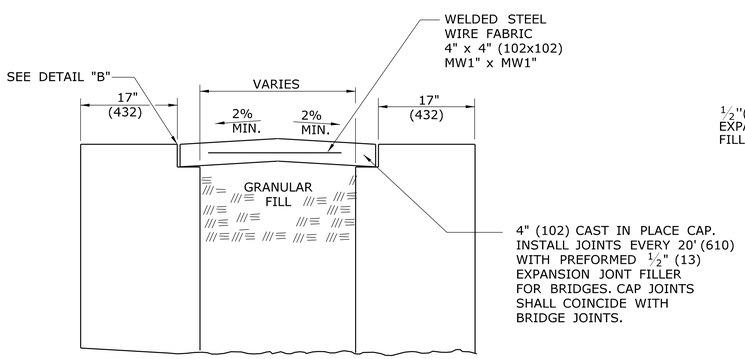

MEDIAN CAP APPLICATION (BARRIER TYPE AND HEIGHT MAY VARY)

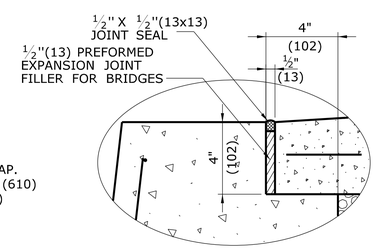

DETAIL "B"

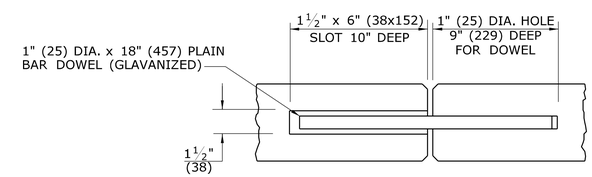

SECTION D -

ALL METRIC DIMENSIONS ARE IN MILLIMETERS (mm) UNLESS OTHERWISE NOTED.

REV.	DATE	REVISION DESCRIPTION
1	3/12	REVISE SLOPE NOTE & DETAIL NOTE
2	7/12	ERRATA
-	-	-
-	-	-
-	-	-
-	-	-
-	-	-

THE INFORMATION, INCLUDING ESTIMATED QUANTITIES OF WORK, SHOWN ON THESE SHEETS IS BASED ON LIMITED INVESTIGATIONS BY THE STATE AND IS IN NO WAY WARRANTED TO INDICATE THE CONDITIONS OF ACTUAL QUANTITIES OF WORK WHICH WILL BE REQUIRED.

Plotted Date: 7/9/2012

NOT TO SCALE

STATE OF CONNECTICUT
DEPARTMENT OF TRANSPORTATION

Filename: June2012.dgn Model: HW-821_07

SUBMITTED BY: NAME/DATE/TIME:

APPROVED BY: NAME/DATE/TIME:

CTDOT STANDARD SHEET

OFFICE OF ENGINEERING

STANDARD SHEET TITLE:

MISCELLANEOUS DETAILS FOR BARRIER TRANSITIONS

STANDARD SHEET NO.:

HW-821_07

GENERAL NOTES:

1. ALTERNATE DESIGNS FOR LIFTING KEYS, HOLES OR OTHER HANDLING DEVICES MAY BE SUBMITTED TO THE ENGINEER FOR APPROVAL.
2. EXPECTED PERMANENT DYNAMIC DEFLECTION IS 3'-6" (1148) BASED ON TL-3 CRASH TESTS WITH 240' (73152) OF TPCBC.

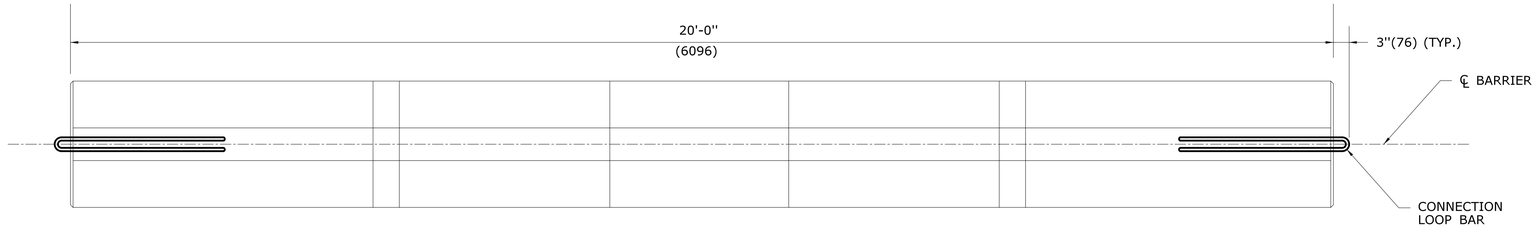

PLAN

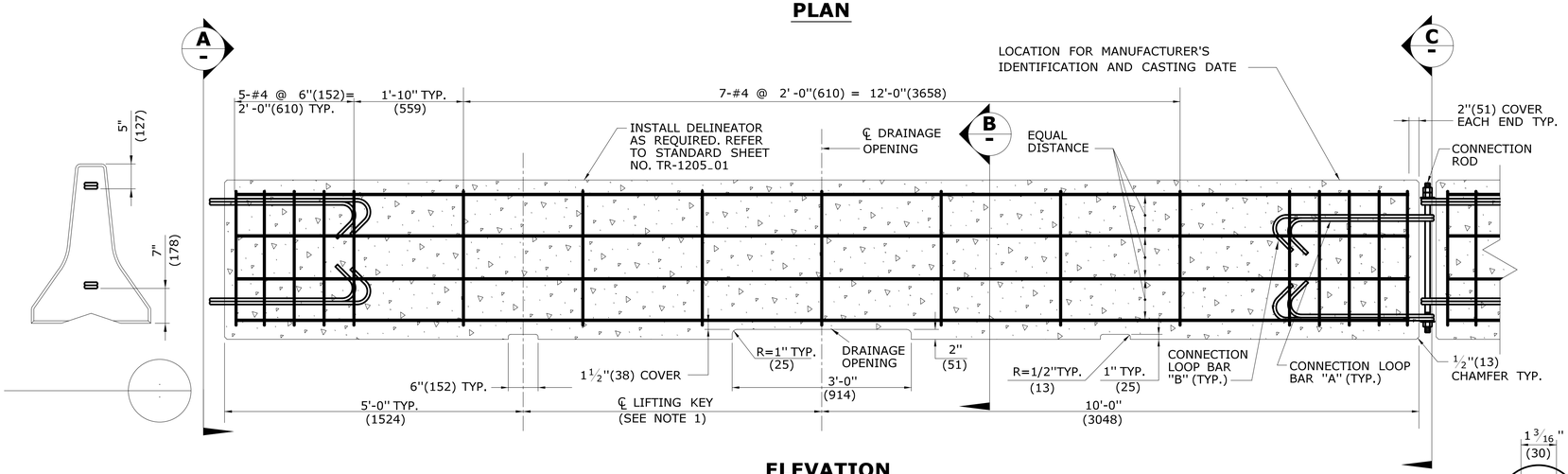

ELEVATION

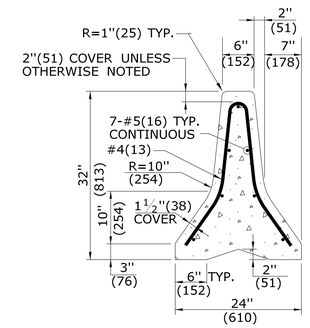

SECTION B

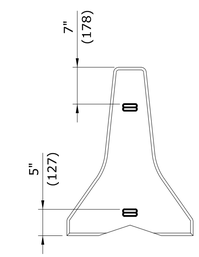

END VIEW C

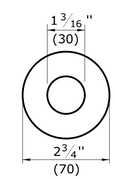

WASHER DETAIL

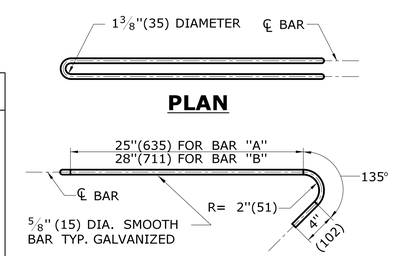

PLAN

ELEVATION

BAR "A" = 6'-0"(1829) TOTAL
BAR "B" = 6'-6"(1981) TOTAL

CONNECTION LOOP BAR

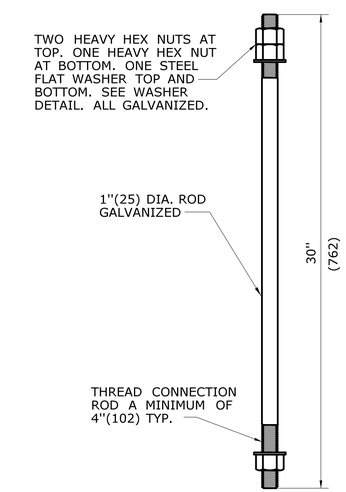

CONNECTION ROD

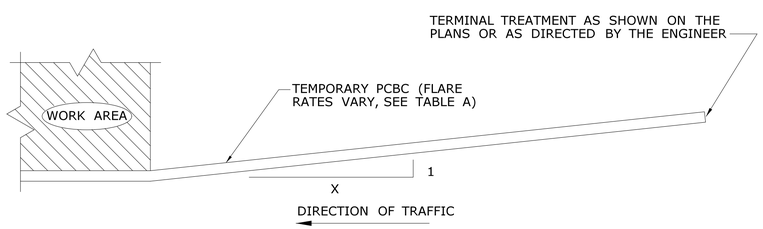

PLAN - TYPICAL INSTALLATION

TABLE A

FLARE RATES

* SPEED	FLARE RATE (X : 1)
≤ 30MPH(48KPH)	4 : 1
> 30MPH(48KPH) <45MPH(72KPH)	6 : 1
≥ 45MPH(72KPH) NON-LIMITED ACCESS HIGHWAYS	8 : 1
ALL LIMITED ACCESS HIGHWAYS	10 : 1

* DESIGN SPEED THROUGH THE WORK AREA.

ALL METRIC DIMENSIONS ARE IN MILLIMETERS (mm) UNLESS OTHERWISE NOTED.

1	3/12	REVISE SLOPE NOTE & DETAIL NOTE	
2	7/13	ERRATA	-
-	-	-	-
-	-	-	-
-	-	-	-
-	-	-	-
-	-	-	-

THE INFORMATION, INCLUDING ESTIMATED QUANTITIES OF WORK, SHOWN ON THESE SHEETS IS BASED ON LIMITED INVESTIGATIONS BY THE STATE AND IS IN NO WAY WARRANTED TO INDICATE THE CONDITIONS OF ACTUAL QUANTITIES OF WORK WHICH WILL BE REQUIRED.

NOT TO SCALE

STATE OF CONNECTICUT
DEPARTMENT OF TRANSPORTATION

NAME/DATE/TIME:

APPROVED BY: NAME/DATE/TIME:

CTDOT STANDARD SHEET

OFFICE OF ENGINEERING

TEMPORARY PRECAST CONCRETE BARRIER CURB

HW-822_01

GENERAL NOTES:

1. FOR WIRE FENCE, METAL POSTS MAY BE SUBSTITUTED AND/OR AS DIRECTED BY THE ENGINEER. REFER TO FORM 816 SECTION 9.06.
2. ALL DIMENSIONS ARE NOMINAL

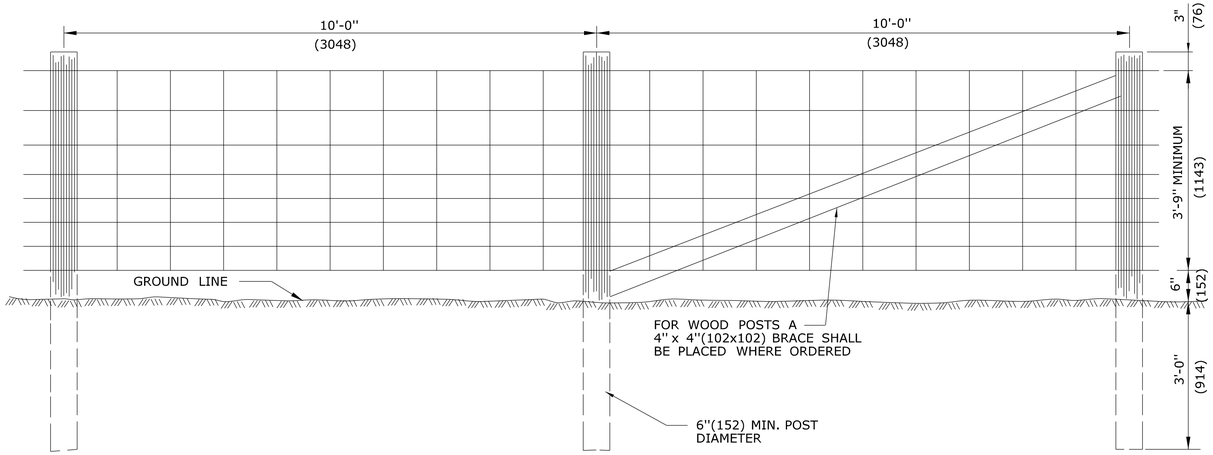

WIRE FENCE

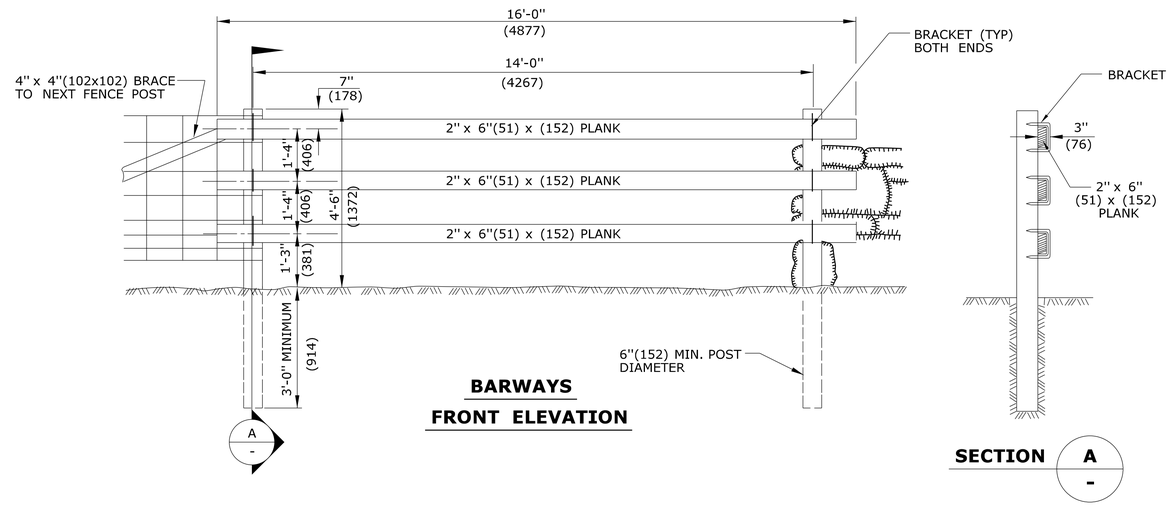

BARWAYS

FRONT ELEVATION

SECTION A - -

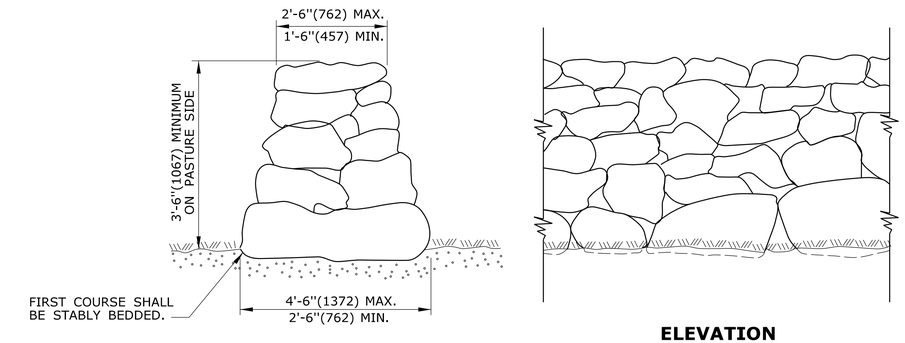

SECTION

ELEVATION

FARM WALL FENCE

PLAN

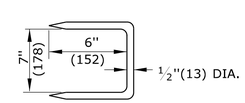

BRACKET

DETAIL A

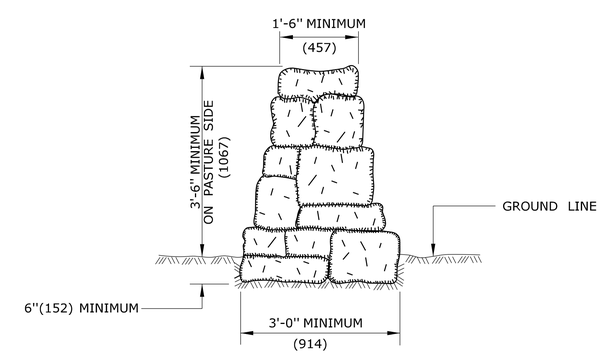

STONE WALL FENCE

SECTION

ALL METRIC DIMENSIONS ARE IN MILLIMETERS (mm) UNLESS OTHERWISE NOTED

REV.	DATE	REVISION DESCRIPTION
-	-	-
-	-	-
-	-	-
-	-	-
-	-	-
-	-	-

THE INFORMATION, INCLUDING ESTIMATED QUANTITIES OF WORK, SHOWN ON THESE SHEETS IS BASED ON LIMITED INVESTIGATIONS BY THE STATE AND IS IN NO WAY WARRANTED TO INDICATE THE CONDITIONS OF ACTUAL QUANTITIES OF WORK WHICH WILL BE REQUIRED.

Plotted Date: 6/23/2011

NOT TO SCALE

STATE OF CONNECTICUT
DEPARTMENT OF TRANSPORTATION

Filename: CTDOT_HIGHWAY_STD_JUNE2011.dgn Model: 35 - HW-905_01

SUBMITTED BY: NAME/DATE/TIME:

APPROVED BY: NAME/DATE/TIME:

CTDOT STANDARD SHEET

OFFICE OF ENGINEERING

STANDARD SHEET TITLE:

FENCES AND BARWAYS

STANDARD SHEET NO.:

HW-905_01

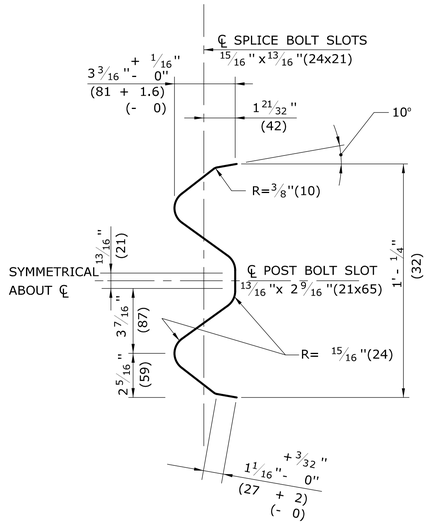

SELECTION THRU RAIL ELEMENT END VIEW

NOTE: ALL DIMENSIONS SUBJECT TO MANUFACTURING TOLERANCES

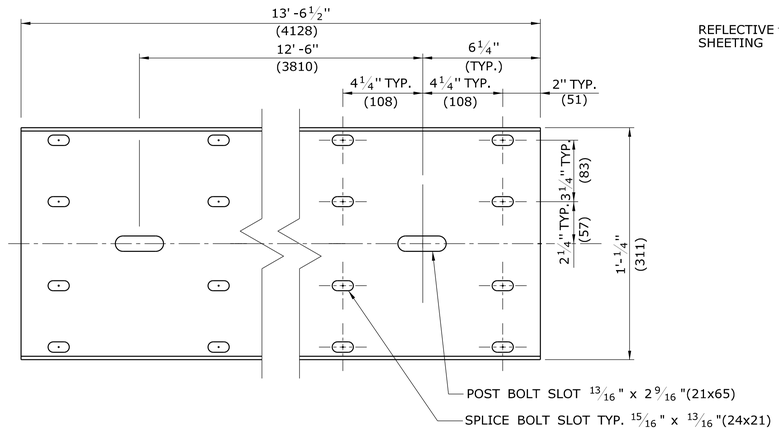

TYPICAL W-BEAM RAIL ELEMENT CLASS A, TYPE II

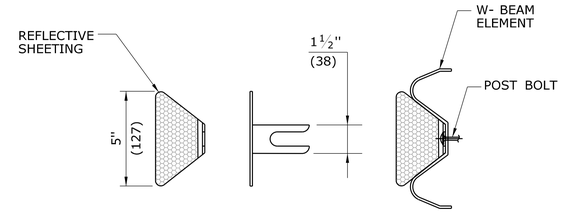

DELINEATOR DETAIL

GENERAL NOTES:

1. NEW R-B 350 GUIDERAIL INCLUDING SYSTEMS, ANCHORS AND TRANSITIONS INSTALLED ON EXPRESSWAYS AND RAMPS SHALL USE CLASS B TYPE II (10 GAUGE) W-BEAM RAIL ELEMENTS.
2. W6x9 (W150x14) POSTS MAY BE USED IN PLACE OF W6 x 8.5(W150x13) POSTS.
3. W8x13 (W200x19) POSTS, 7'-6"(2286) LONG, ARE USED WITH TRANSITIONS TO VERTICAL OR SAFETY SHAPE PARAPETS (POSTS 1 AND 2) AND SYSTEM 6.
4. W6x8.5 (W150x13) POSTS, 6'-0"(1829) LONG, ARE USED WITH TRANSITIONS TO VERTICAL OR SAFETY SHAPE PARAPETS (POSTS 3 THOUGH 6), MD-B 350, SYSTEM 5 & 5A, AND STANDARD R-B 350 GUIDERAIL.

DELINEATOR NOTES:

1. DELINEATORS SHALL BE FORMED OF .080 POLY-CARBONATE OR .080 SHEET ALUMINUM IN ACCORDANCE WITH M.18.13.
2. REFLECTIVE SHEETING SHALL CONFORM TO M.18.09.2.
3. DELINEATORS SHALL BE INSTALLED ON THE POST CLOSEST TO THE DESIGNATED SPACING.
4. REFLECTIVE SHEETING SHALL BE WHITE EXCEPT ON THE LEFT SIDE OF DIVIDED STREETS, HIGHWAYS, RAMPS, AND ONE WAY ROADS IN THE DIRECTION OF TRAVEL WHERE IT SHALL BE YELLOW.
5. INSTALL DELINEATORS ON RAIL THAT IS PARALLEL TO AND NOT GREATER THAN 6'(1829) FROM THE EDGE OF THE ROADWAY. A MINIMUM OF THREE DELINEATORS MUST BE INSTALLED ON ANY RUN OF RAIL.

DELINEATOR SPACING:
RADIUS ≥ 300'(91440) - SPACE EVERY 50'(15.24m)
RADIUS < 300'(91440) - SPACE EVERY 25'(7.62m)

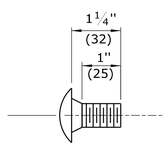

W-BEAM SPLICE BOLT DETAIL

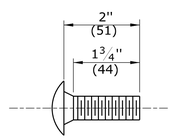

POST BOLT DETAIL FOR R-B 350 SYSTEM 6 RUBRAIL

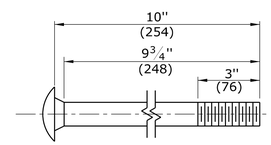

POST BOLT DETAIL FOR R-B 350 AND MD-B 350 GUIDERAIL

(UNTHREADED PORTION NOT TO EXCEED 6 3/4"(171))

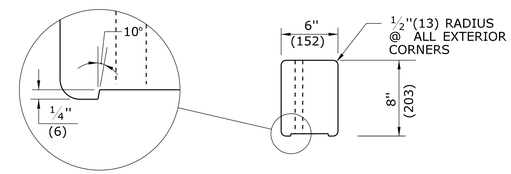

PLAN

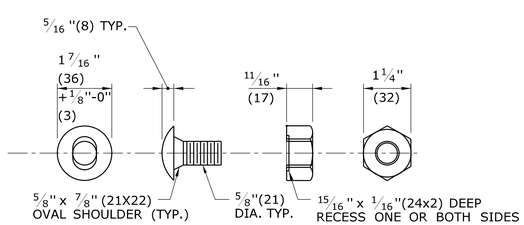

BUTTONHEAD BOLT **HEX NUT**

NOTE: AFTER GALVANIZING, THE NUT SHALL BE FREE RUNNING ON THE BOLT. DIAMETER SHOWN IS TYPICAL FOR ALL GUIDERAIL BOLTS. SEE DETAILS ABOVE FOR SPECIFIC LENGTHS.

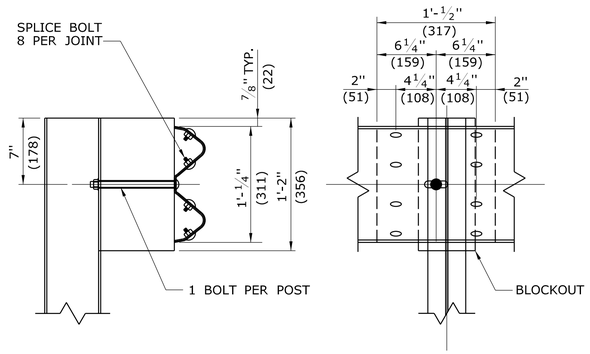

SECTION **ELEVATION**

LAP DETAIL

NOTE:
LAP RAIL SECTION IN DIRECTION OF TRAFFIC

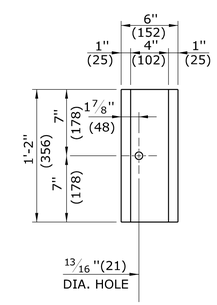

ELEVATION

R-B 350 PLASTIC BLOCKOUT DETAIL

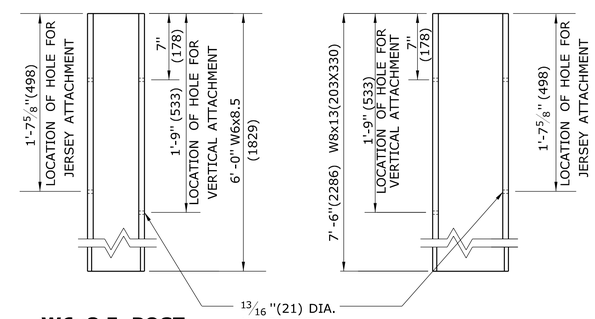

W6x8.5 POST (W150x13) 6'-0"(1829) LONG

W8x13 POST (W200x19) 7'-6"(2286) LONG

BOLT HOLE LAYOUT FOR W8x13(W200x19) AND W6x8.5 (W150x13)UNIFORM POST

(REFER TO GENERAL NOTES)

ALL METRIC DIMENSIONS ARE IN MILLIMETERS (mm) UNLESS OTHERWISE NOTED.

REV.	DATE	REVISION DESCRIPTION
1	6/11	REMOVE WEATHERING STEEL NOTES
-	-	-
-	-	-
-	-	-
-	-	-
-	-	-

THE INFORMATION, INCLUDING ESTIMATED QUANTITIES OF WORK, SHOWN ON THESE SHEETS IS BASED ON LIMITED INVESTIGATIONS BY THE STATE AND IS IN NO WAY WARRANTED TO INDICATE THE CONDITIONS OF ACTUAL QUANTITIES OF WORK WHICH WILL BE REQUIRED.

Plotted Date: 5/10/2011

NOT TO SCALE

STATE OF CONNECTICUT
DEPARTMENT OF TRANSPORTATION

Filename: CTDOT_HIGHWAY_STD_JUNE2011.dgn Model: 36-HW-910_01

SUBMITTED BY: NAME/DATE/TIME:

APPROVED BY: NAME/DATE/TIME:

CTDOT STANDARD SHEET

OFFICE OF ENGINEERING

STANDARD SHEET TITLE:

W-BEAM METAL BEAM RAIL HARDWARE

STANDARD SHEET NO.: HW-910_01

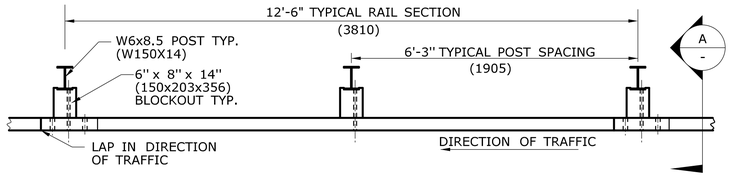

PLAN

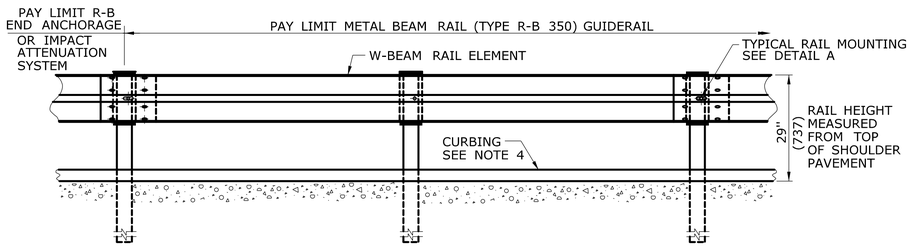

ELEVATION

METAL BEAM RAIL (TYPE R-B 350)

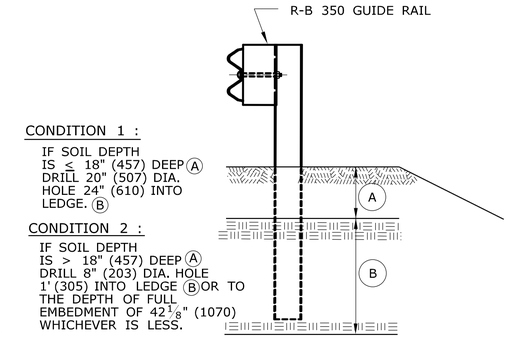

ELEVATION

(SEE NOTE 8)

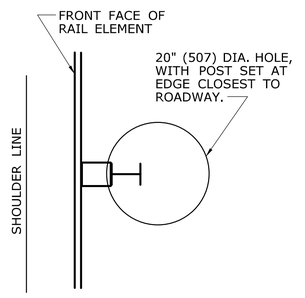

PLAN
CONDITION 1

(SEE NOTE 8)

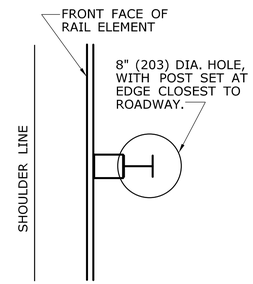

PLAN
CONDITION 2

(SEE NOTE 8)

DRILLING IN ROCK FOR GUIDERAIL POSTS

GENERAL NOTES:

1. SEE SHEET HW-910_01 FOR HARDWARE AND DELINEATOR DETAILS.
2. MAXIMUM DESIGN DEFLECTION FOR R-B 350 GUIDERAIL AT THE STANDARD POST SPACING OF 6'-3"(1905) IS 4'-3"(1295). DEFLECTION REQUIREMENT IS MEASURED FROM THE BACK OF POST TO THE FACE OF OBJECT.
3. FOR CURVES WITH RADII OF 150'(45.7m) OR LESS, ALL RAIL ELEMENTS SHALL BE SHOP FABRICATED TO THE PROPER RADIUS AND GALVANIZED AFTER FABRICATION. RADIUS RAIL WHEN REQUIRED AND NOTED ON THE PLANS, IS INCLUDED IN THE PAY ITEM FOR GUIDERAIL.
4. RAIL HEIGHT WITH CURBING SHALL BE MEASURED FROM THE TOP OF PAVEMENT. ON HIGH SPEED ROADWAYS (≥45mph 72.4kph), 4"(102) CURBING MAY BE USED IN CONJUNCTION WITH GUIDERAIL AND THE RAIL ELEMENT SHALL BE PLACED FLUSH WITH THE FACE OF CURB. ON LOW SPEED ROADWAYS (<45mph 72.4kph), 6"(152) CURBING MAY BE USED IN CONJUNCTION WITH GUIDERAIL AND THE RAIL ELEMENT SHALL BE PLACED A MAXIMUM OF 9"(229) BEHIND THE FACE OF CURB.
5. THREE BLOCKOUTS MAY BE USED FOR ONE POST ONLY. TWO BLOCKOUTS MAY BE USED FOR A SERIES OF POSTS. THE COST OF ADDITIONAL BLOCKOUTS AND LONGER BOLTS SHALL BE INCLUDED IN THE BID PRICE PER FOOT OF GUIDERAIL. EXTRA BLOCKOUTS AT TRANSITION TO BRIDGE PARAPETS SHOULD BE AVOIDED.
6. W-BEAM GUIDERAIL MAY BE PLACED 1' (305) OR MORE FROM THE EDGE OF PAVEMENT ONLY ON SLOPES 10:1 OR FLATTER AND WITHOUT CURBING. IF THE RAIL IS INSTALLED WITHIN 2'(610) OF THE EDGE OF PAVEMENT, THE RAIL HEIGHT IS MEASURED FROM THE SHOULDER SLOPE EXTENDED TO THE RAIL. IF THE RAIL IS INSTALLED BEYOND 2'(610) FROM THE EDGE OF PAVEMENT, THE RAIL HEIGHT IS MEASURED FROM THE GROUND DIRECTLY BELOW THE RAIL.
7. ALL R-B 350 GUIDERAIL TYPES INSTALLED ON EXPRESSWAYS AND RAMPS SHALL USE CLASS B, TYPE-II (10 GAUGE) W-BEAM RAIL ELEMENTS.
8. 20" (507) DIA. EXCAVATED HOLE SHALL BE BACKFILLED WITH SUITABLE MATERIAL, OR GRANULAR FILL COMPACTED IN 6" (150) LIFTS BEFORE DRIVING POST OR POSTS MAY BE SET IN EXCAVATED HOLE AND BACKFILLED WITH CONTROLLED LOW STRENGTH MATERIAL (CLSM). 8" (203) DIA. HOLE SHALL BE BACKFILLED WITH SUITABLE MATERIAL.
9. AS DIRECTED BY THE ENGINEER AND WHERE PAVEMENT FOR RAILING IS NOT BEING INSTALLED, A MIN. 6" DEPTH OF PROCESSED AGGREGATE SHALL BE INSTALLED FROM THE PAVEMENT EDGE OR BACK OF CURB TO A MINIMUM OF 2' (610) BEHIND THE GUIDERAIL POST AND COMPACTED IN 6" (150) LIFTS.
10. MINIMUM RAIL HEIGHT FOR NEW CONSTRUCTION SHALL BE 29" (737) ± 1" (25).

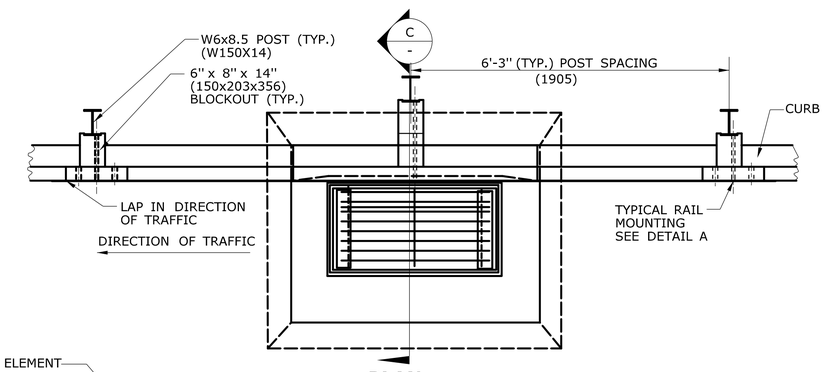

PLAN

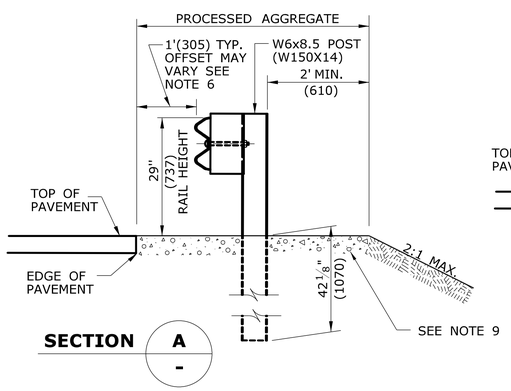

SECTION A -

NO CURB APPLICATION

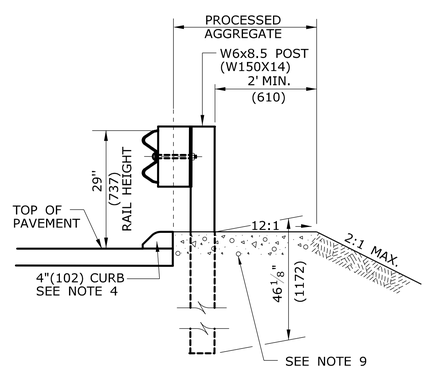

SECTION A -

CURB APPLICATION

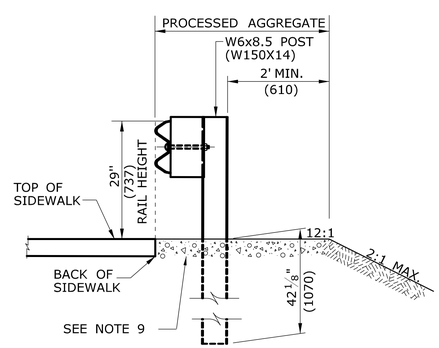

SECTION A -

SIDEWALK APPLICATION

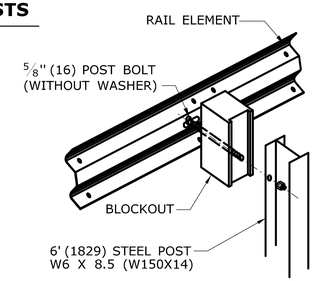

DETAIL A
RAIL MOUNTING

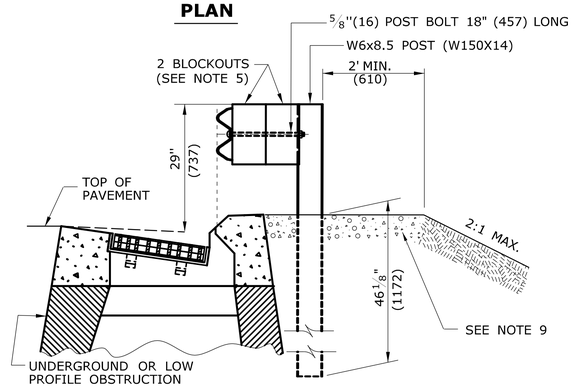

SECTION C -

MULTIPLE BLOCKOUT APPLICATION (MAY BE USED TO AVOID UNDERGROUND OR LOW PROFILE OBSTRUCTION)

ALL METRIC DIMENSIONS ARE IN MILLIMETERS (mm) UNLESS OTHERWISE NOTED.

REV.	DATE	REVISION DESCRIPTION
1	6/11	REVISED NOTE 9 FOR USE OF PROCESSED AGGREGATE -
		AND REMOVED NOTE 6 FOR WEATHERING STEEL -
-	-	- -
-	-	- -
-	-	- -
-	-	- -

THE INFORMATION, INCLUDING ESTIMATED QUANTITIES OF WORK, SHOWN ON THESE SHEETS IS BASED ON LIMITED INVESTIGATIONS BY THE STATE AND IS IN NO WAY WARRANTED TO INDICATE THE CONDITIONS OF ACTUAL QUANTITIES OF WORK WHICH WILL BE REQUIRED.

Plotted Date: 5/10/2011

NOT TO SCALE

STATE OF CONNECTICUT
DEPARTMENT OF TRANSPORTATION

Filename: CTDOT_HIGHWAY_STD_JUNE2011.dgn Model: 37- HW-910_02

SUBMITTED BY: NAME/DATE/TIME:

APPROVED BY: NAME/DATE/TIME:

CTDOT
STANDARD SHEET

OFFICE OF ENGINEERING

STANDARD SHEET TITLE:

METAL BEAM RAIL (TYPE R-B 350) GUIDERAIL

STANDARD SHEET NO.:

HW-910_02

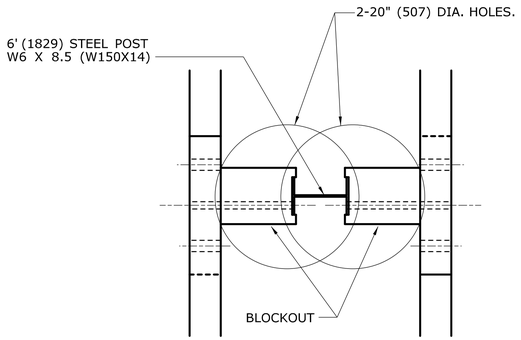

PLAN
CONDITION 1
(SEE NOTE 6)

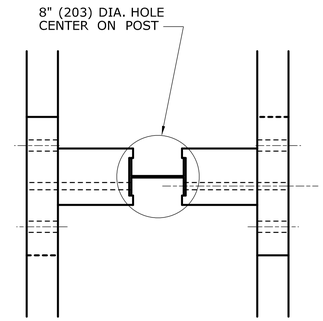

PLAN
CONDITION 2
(SEE NOTE 6)

DRILLING IN ROCK FOR GUIDERAIL POSTS

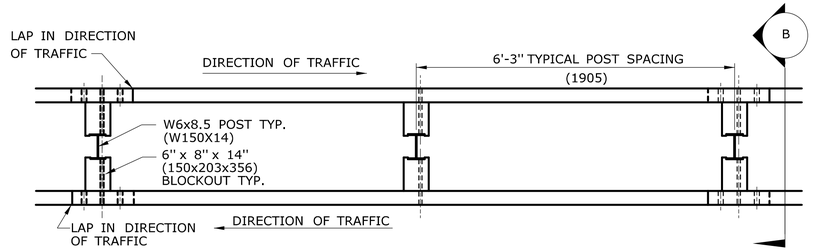

PLAN

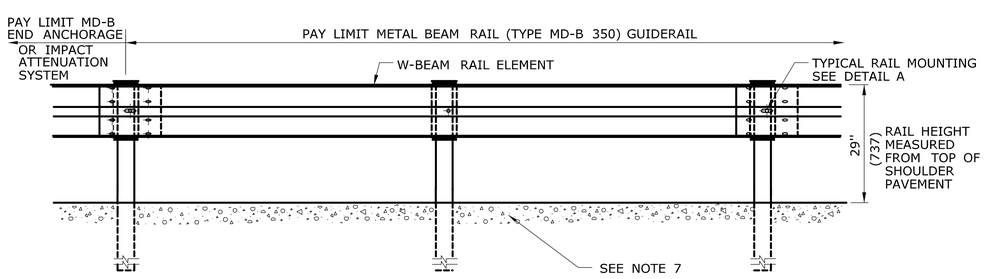

ELEVATION

METAL BEAM RAIL (TYPE MD-B 350)

GENERAL NOTES:

1. SEE SHEET HW-910_01 FOR HARDWARE AND DELINEATOR DETAILS.
2. MAXIMUM DESIGN DEFLECTION FOR MD-B 350 GUIDERAIL AT THE STANDARD POST SPACING OF 6'-3"(1905) IS 2' (610). DEFLECTION REQUIREMENT IS MEASURED FROM THE BACK OF POST TO THE FACE OF OBJECT.
3. FOR CURVES WITH RADII OF 150'(45.7m) OR LESS, ALL RAIL ELEMENTS SHALL BE SHOP FABRICATED TO THE PROPER RADIUS AND GALVANIZED AFTER FABRICATION. RADIUS RAIL WHEN REQUIRED AND NOTED ON THE PLANS, IS INCLUDED IN THE PAY ITEM FOR GUIDERAIL.
4. W-BEAM GUIDERAIL MAY BE PLACED 1' (305) OR MORE FROM THE EDGE OF PAVEMENT ONLY ON SLOPES 10:1 OR FLATTER AND WITHOUT CURBING. IF THE RAIL IS INSTALLED WITHIN 2'(610) OF THE EDGE OF PAVEMENT, THE RAIL HEIGHT IS MEASURED FROM THE SHOULDER SLOPE EXTENDED TO THE RAIL. IF THE RAIL IS INSTALLED BEYOND 2' (610) FROM THE EDGE OF PAVEMENT, THE RAIL HEIGHT IS MEASURED FROM THE GROUND DIRECTLY BELOW THE RAIL.
5. MD-B 350 DOES NOT REQUIRE 10 GAUGE RAIL ELEMENTS.
6. 2-20" (507) DIA. EXCAVATED HOLES SHALL BE BACK FILLED WITH SUITABLE MATERIAL, OR GRANULAR FILL COMPACTED IN 6" (150) LIFTS BEFORE DRIVING POST OR POSTS MAY BE SET IN EXCAVATED HOLE AND BACK FILLED WITH CONTROLLED LOW STRENGTH MATERIAL (CLSM). 8" (203) DIA. HOLE SHALL BE BACK FILLED WITH SUITABLE MATERIAL.
7. AS DIRECTED BY THE ENGINEER AND WHERE PAVEMENT FOR RAILING IS NOT BEING INSTALLED, A 6" MIN. DEPTH OF PROCESSED AGGREGATE SHALL BE INSTALLED A MINIMUM OF 2' (610) WIDE UNDER GUIDERAIL CENTERED ON THE POST AND COMPACTED IN 6" (150) LIFTS.
8. MINIMUM RAIL HEIGHT FOR NEW CONSTRUCTION SHALL BE 29" (737) ± 1" (25).

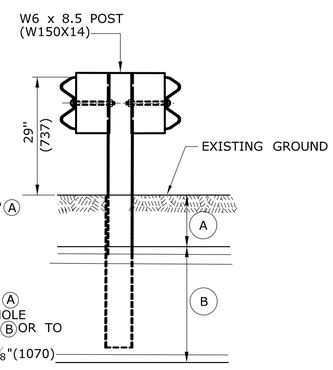

CONDITION 1 :
IF SOIL DEPTH IS ≤ 18" (457) DEEP (A) DRILL 20" (507) DIA. HOLE 24" (610) INTO LEDGE. (B)

CONDITION 2 :
IF SOIL DEPTH IS > 18" (457) DEEP (A) DRILL 8" (203) DIA. HOLE 1' (305) INTO LEDGE (B) OR TO THE DEPTH OF FULL EMBEDMENT OF 42 1/8"(1070) WHICHEVER IS LESS.

SECTION B / -

NOTE: REFER TO DESIGN PLANS FOR LOCATION OF GUIDERAIL IN THE MEDIAN WITH OR WITHOUT CURBING.

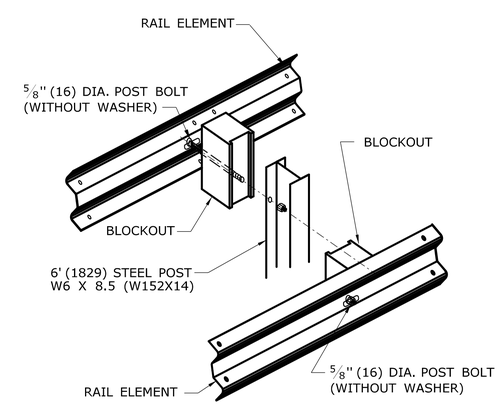

DETAIL A

RAIL MOUNTING

ALL METRIC DIMENSIONS ARE IN MILLIMETERS (mm) UNLESS OTHERWISE NOTED.

REV.	DATE	REVISION DESCRIPTION
1	6/11	REVISED NOTE 7 FOR USE OF PROCESSED AGGREGATE -
-	-	AND REMOVED NOTE 4 USE OF WEATHERING STEEL -
-	-	- -
-	-	- -
-	-	- -
-	-	- -

THE INFORMATION, INCLUDING ESTIMATED QUANTITIES OF WORK, SHOWN ON THESE SHEETS IS BASED ON LIMITED INVESTIGATIONS BY THE STATE AND IS IN NO WAY WARRANTED TO INDICATE THE CONDITIONS OF ACTUAL QUANTITIES OF WORK WHICH WILL BE REQUIRED.

Plotted Date: 5/10/2011

NOT TO SCALE

STATE OF CONNECTICUT
DEPARTMENT OF TRANSPORTATION

Filename: CTDOT_HIGHWAY_STD_JUNE2011.dgn Model: 38- HW-910_03

SUBMITTED BY: NAME/DATE/TIME:

APPROVED BY: NAME/DATE/TIME:

CTDOT
STANDARD SHEET

OFFICE OF ENGINEERING

STANDARD SHEET TITLE:
METAL BEAM RAIL (TYPE MD-B 350)

STANDARD SHEET NO.:
HW-910_03

GENERAL NOTES:

1. THIS DETAIL WAS DEVELOPED FROM MwRSF RESEARCH REPORT NO. TRP-03-187-07 FOR USE WITH THE MIDWEST GUIDERAIL SYSTEM (MGS).
2. THIS SYSTEM IS NOT FOR USE IN-CONJUNCTION WITH ANY CURB TYPE.
3. W-BEAM RAIL ELEMENTS SHALL BE FABRICATED WITH 3'-1½" POST HOLES.
4. W-BEAM RAIL SPLICES SHALL BE BOLTED TOGETHER WITHIN THE PAY LIMITS @ NON-POST LOCATIONS.
5. THIS SYSTEM IS NOT INTENDED FOR USE ON A RADIUS.

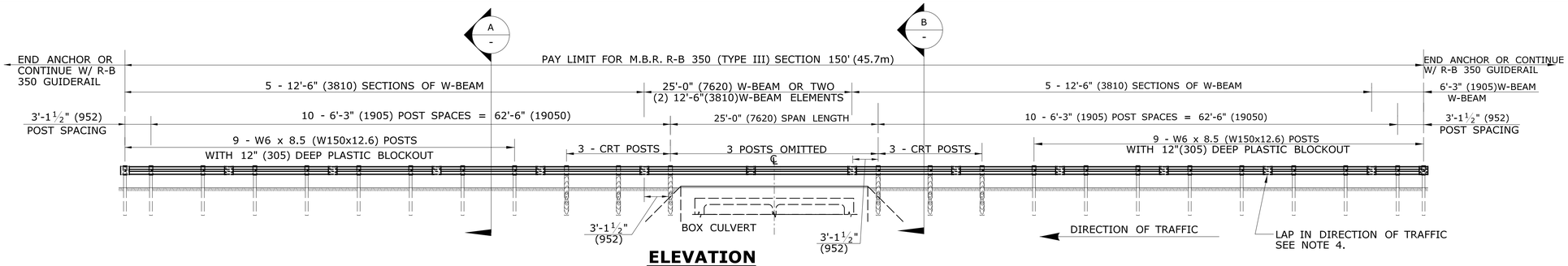

ELEVATION
3 POSTS OMITTED 25'-0" (7620) LONG SPAN

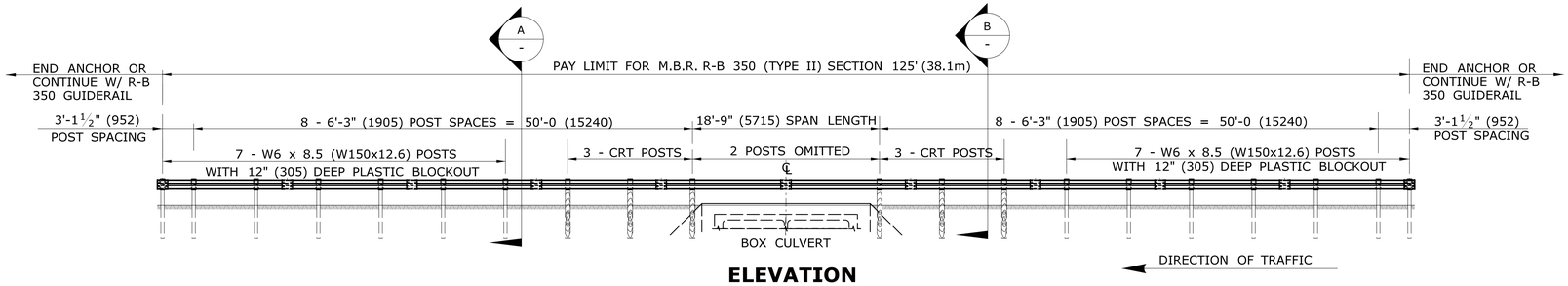

ELEVATION
2 POSTS OMITTED - 18'-9" (5715) LONG SPAN

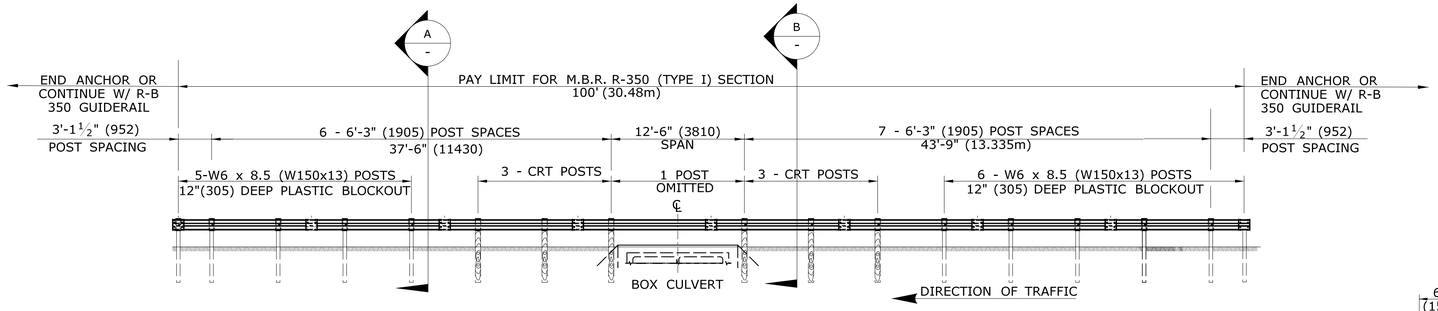

ELEVATION
1 POST OMITTED 12'-6" (3810) LONG SPAN

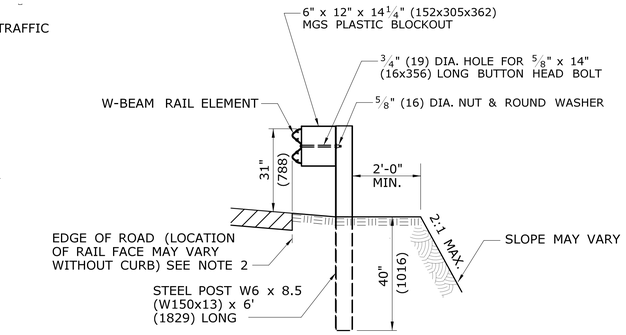

STEEL POST W/ 12"(305) PLASTIC BLOCKOUT

SECTION A

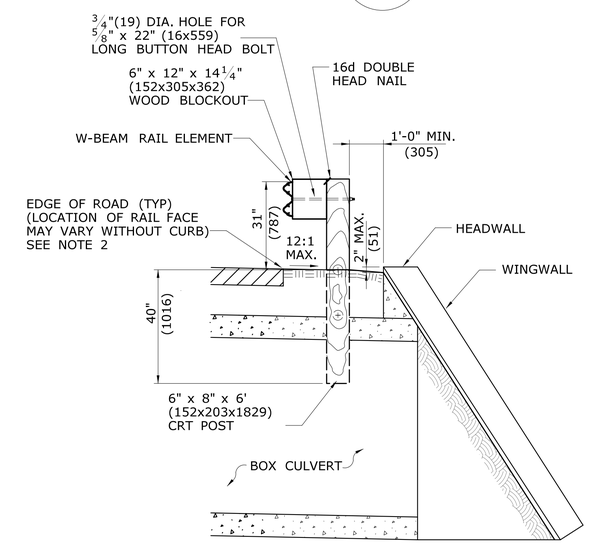

CONTROL RELEASE TIMBER (CRT) POST

SECTION B

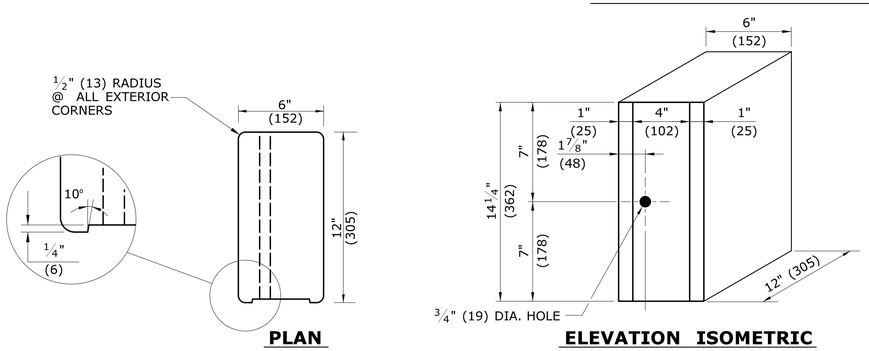

PLAN

ELEVATION ISOMETRIC

12"(305) DEEP PLASTIC BLOCKOUT DETAIL

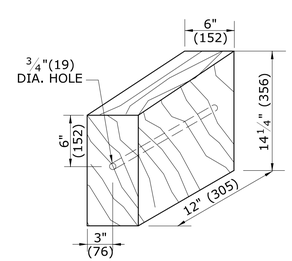

WOOD BLOCKOUT 6"x12"x14¼" (152x305x362)

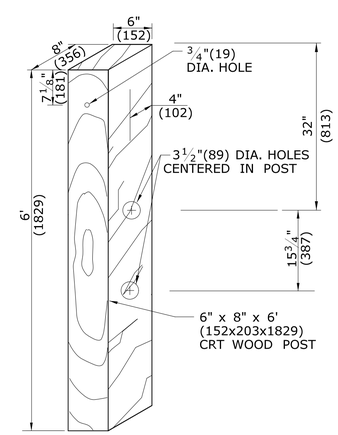

CRT POST

ALL METRIC DIMENSIONS ARE IN MILLIMETERS (mm) UNLESS OTHERWISE NOTED.

REV.	DATE	REVISION DESCRIPTION	
1	7/13	NEW SYSTEM 350 APPROVED	-
-	-	-	-
-	-	-	-
-	-	-	-
-	-	-	-
-	-	-	-

THE INFORMATION, INCLUDING ESTIMATED QUANTITIES OF WORK, SHOWN ON THESE SHEETS IS BASED ON LIMITED INVESTIGATIONS BY THE STATE AND IS IN NO WAY WARRANTED TO INDICATE THE CONDITIONS OF ACTUAL QUANTITIES OF WORK WHICH WILL BE REQUIRED.

Plotted Date: 6/14/2013

NOT TO SCALE

STATE OF CONNECTICUT
DEPARTMENT OF TRANSPORTATION

Filename: CTDOT_HIGHWAY_STD2013.dgn Model: 46 - HW-910_05

SUBMITTED BY: NAME/DATE/TIME:

APPROVED BY: NAME/DATE/TIME:

CTDOT STANDARD SHEET

OFFICE OF ENGINEERING

STANDARD SHEET TITLE:

MBR R-B 350 SPAN TYPE I, II, III SECTIONS

STANDARD SHEET NO.:

HW-910_05

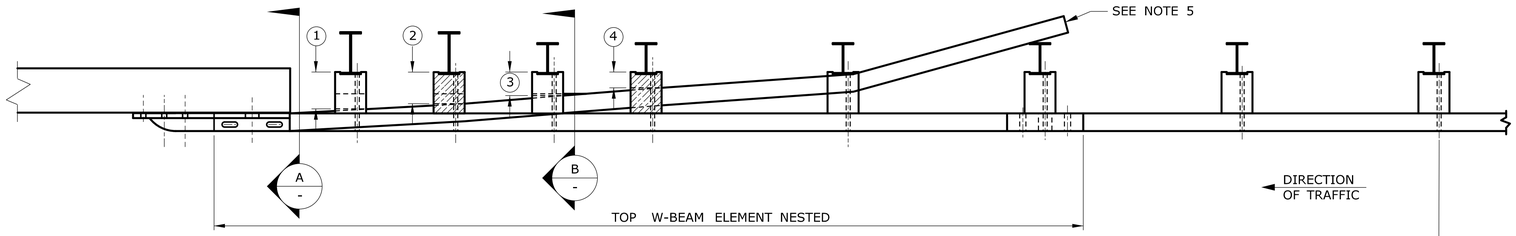

PLAN

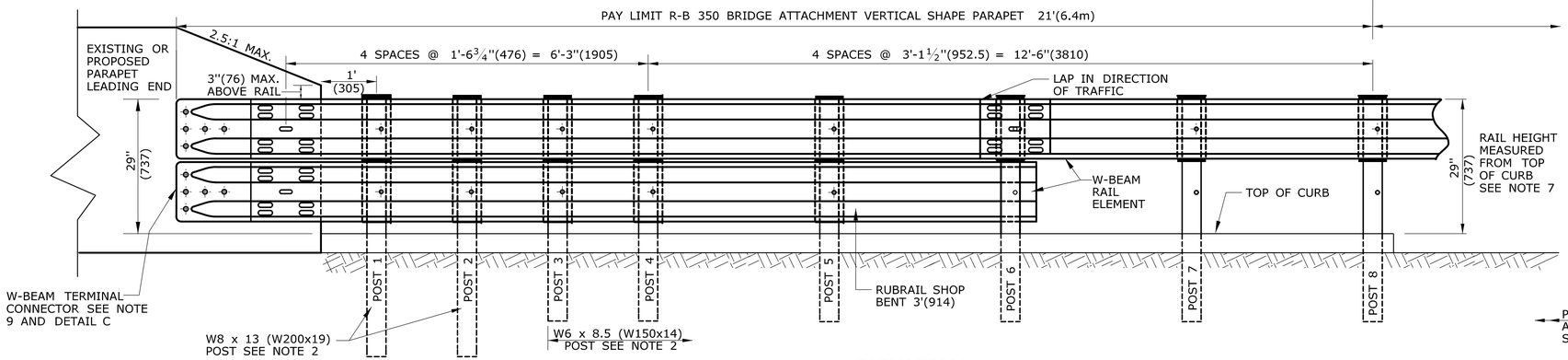

ELEVATION

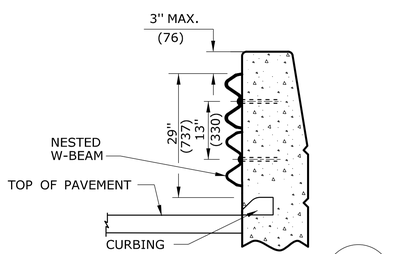

SECTION A -

WITH CURBING

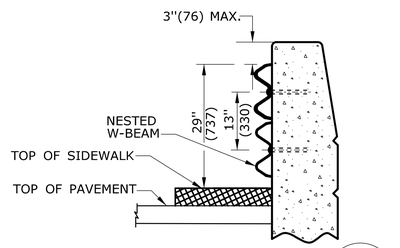

SECTION A -

WITH SIDEWALK

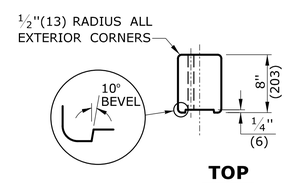

TOP

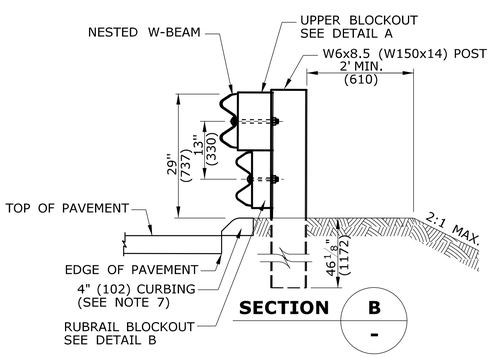

SECTION B -

WITH CURBING

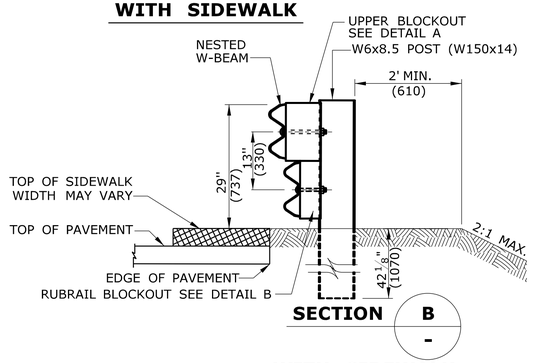

SECTION B -

WITH SIDEWALK

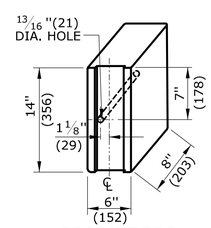

ISOMETRIC

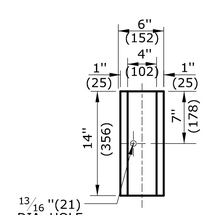

FRONT

DETAIL A

UPPER BLOCKOUT

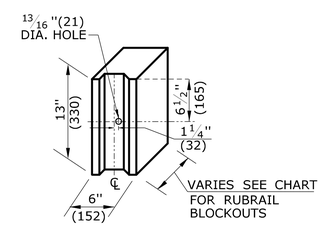

DETAIL B

RUBRAIL BLOCKOUT

RUBRAIL BLOCKOUTS 13"(330)HIGH x 6"(152)WIDE		
POST	THICKNESS	BOLT LENGTH
1	7"(178)	9"(229)
2	6"(152)	8"(203)
3	4½"(114)	6"(152)
4	3"(76)	5"(127)

GENERAL NOTES:

1. THIS R-B 350 GUIDERAIL TRANSITION IS APPROPRIATE FOR CONNECTION AT THE FOLLOWING LOCATIONS:
   (A) WHEN ANY SAFETY SHAPE (F-SHAPED OR JERSEY SHAPE) PARAPET HAS AN ELECTRICAL JUNCTION BOX WITHIN 8' (2438) OF THE END OF THE PARAPET, THE END OF THE PARAPET SHALL BE MODIFIED OR TRANSFORMED TO A VERTICAL SHAPE PRIOR TO GUIDERAIL ATTACHMENT.
   (B) VERTICAL WALL OR ABUTMENT FACE.
   (C) VERTICAL CONCRETE PARAPET WITH SIDEWALK.
   (D) VERTICAL FACE FOR LEADING AND TRAILING ENDS ON DUAL DIRECTION ROADWAYS.
2. POSTS 1 AND 2 ARE W8 x 13(W200x19), 7'-6" (2286) LONG. ALL OTHER POSTS IN TRANSITION ARE W6 x 8.5(W150x14), 6' (1829) LONG.
3. POSTS 1 THROUGH 5 REQUIRE AN ADDITIONAL HOLE TO ATTACH LOWER BLOCKOUTS AND/OR LOWER RUBRAIL.
4. RUBRAIL BLOCKOUTS FOR POSTS 1 THROUGH 4 ARE ATTACHED TO POST AND RAIL WITH A ⅝" (16) BUTTONHEAD BOLTS (SEE CHART FOR BOLT LENGTH). RUBRAIL ONLY IS ATTACHED TO POST 5 WITH A ⅝" x 1¼" (16 x 32) BUTTONHEAD BOLT.
5. THE RUBRAIL MAY BE SHOP BENT IN THE LAST 3' (914) TO FACILITATE INSTALLATION. DO NOT ATTACH RUBRAIL TO BACK OF POST 6.
6. USE CLASS B (10 GAUGE) TYPE II W-BEAM RAIL ELEMENTS FOR INSTALLATIONS ON EXPRESSWAYS AND RAMPS.
7. FOR THIS APPLICATION WHEN CURBING IS USED, R-B 350 RAIL HEIGHT MUST BE MEASURED FROM THE TOP OF CURBING TO THE TOP OF RAIL. SEE DETAIL D FOR HEIGHT TRANSITION.
8. FOR NEW CONSTRUCTION WHERE CURBING IS NEEDED, USE EITHER 4" (102) BITUMINOUS CONCRETE PARK CURBING OR PRECAST CONCRETE TRANSITION CURBING SET WITH A 4" (102) REVEAL. THE PREFERRED CURBING FOR HIGH SPEED ROADWAYS (≥45 MPH (72kph)) IS 4" (102). HOWEVER, ON LOW SPEED ROADWAYS (<45 MPH (72kPH)) A 6" (152) CURBING MAY BE USED. ADJUST RAIL HEIGHT AS REQUIRED.
9. ANCHORAGE:
   (A) AT EXISTING PARAPETS EACH W-BEAM TERMINAL CONNECTOR SHALL BE ANCHORED USING FOUR ⅞" x 12" (22 x 305) CHEMICALLY ANCHORED BOLTS WITH WASHERS OR AS DETAILED ON STRUCTURE SHEETS. MAXIMUM BOLT PROJECTION BEYOND THE NUT SHALL BE ½" (13). THE 12" (305) MINIMUM LENGTH OF CHEMICALLY ANCHORED BOLTS SHALL INCLUDE A MINIMUM EMBEDMENT DEPTH OF 10" (254) INTO SUITABLY REINFORCED CONCRETE OR AS RECOMMENDED BY THE MANUFACTURER OF BONDING MATERIAL.
   (B) FOR NEW PARAPETS OR BARRIERS, THE W-BEAM TERMINAL CONNECTORS SHALL BE ANCHORED AS DETAILED ON THE STRUCTURE SHEETS.
10. ADDITIONAL BLOCKOUTS WITH POSTS 1 THROUGH 6 SHOULD BE AVOIDED.
11. FOR SINGLE DIRECTION ROADWAY:
    INSTALL W-BEAM TERMINAL CONNECTOR BETWEEN NESTED GUIDERAIL ELEMENTS.
    FOR DUAL DIRECTION ROADWAY FOR APPROACHING TRAFFIC:
    INSTALL W-BEAM TERMINAL CONNECTOR BETWEEN NESTED GUIDERAIL ELEMENTS.
    FOR TRAILING END:
    INSTALL W-BEAM TERMINAL CONNECTOR OUTSIDE OF THE NESTED GUIDERAIL ELEMENTS.
12. MINIMUM RAIL HEIGHT FOR NEW CONSTRUCTION SHALL BE 29" (737) ± 1" (25).

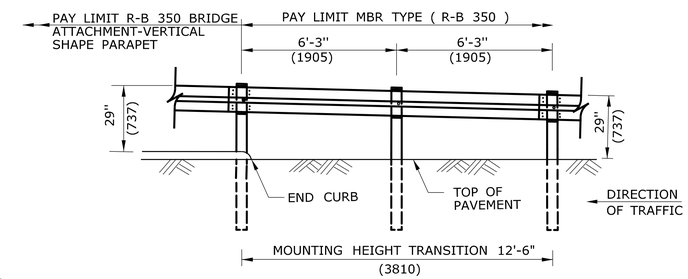

DETAIL D

HEIGHT TRANSITION

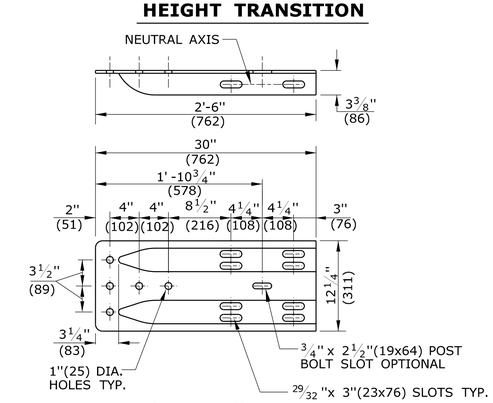

DETAIL C

W-BEAM TERMINAL CONNECTOR

CLASS B TYPE II

SEE NOTE 11

ALL METRIC DIMENSIONS ARE IN MILLIMETERS (mm) UNLESS OTHERWISE NOTED.

REV.	DATE	REVISION DESCRIPTION	
1	6/11	REVISED NOTE 9 FOR USE OF CHEMICAL ANCHORS	-
-	-	-	-
-	-	-	-
-	-	-	-
-	-	-	-
-	-	-	-

THE INFORMATION, INCLUDING ESTIMATED QUANTITIES OF WORK, SHOWN ON THESE SHEETS IS BASED ON LIMITED INVESTIGATIONS BY THE STATE AND IS IN NO WAY WARRANTED TO INDICATE THE CONDITIONS OF ACTUAL QUANTITIES OF WORK WHICH WILL BE REQUIRED.

Plotted Date: 5/10/2011

NOT TO SCALE

STATE OF CONNECTICUT
DEPARTMENT OF TRANSPORTATION

Filename: CTDOT_HIGHWAY_STD_JUNE2011.dgn Model: 42 - HW-910_07

SUBMITTED BY: NAME/DATE/TIME:

APPROVED BY: NAME/DATE/TIME:

CTDOT STANDARD SHEET

OFFICE OF ENGINEERING

STANDARD SHEET TITLE:

R-B 350 BRIDGE ATTACHMENT VERTICAL SHAPE PARAPET

STANDARD SHEET NO.:

HW-910_07

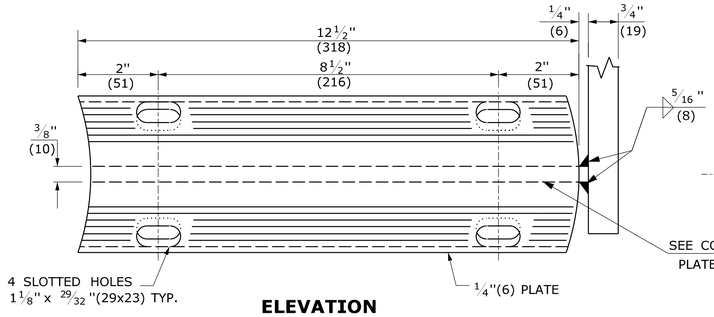

ELEVATION

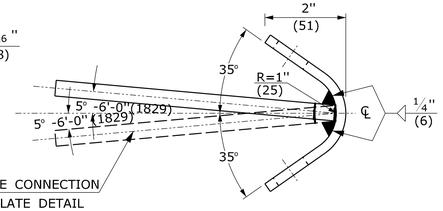

SIDE

BENT PLATE

(2 REQUIRED)

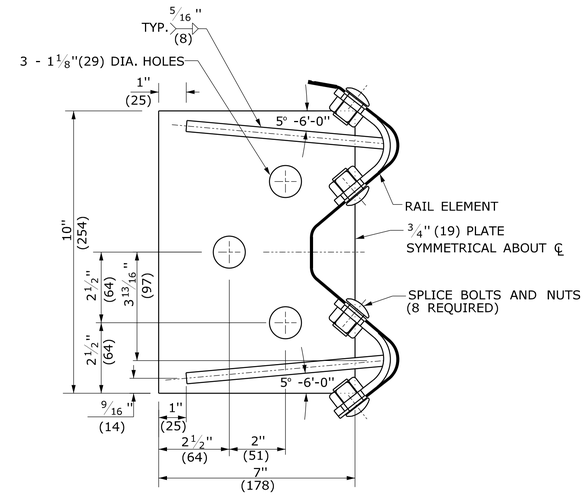

BASE PLATE AND ASSEMBLY

GENERAL NOTES:

1. SEE SHEET HW-910_01 FOR HARDWARE AND DELINEATOR DETAILS.
2. IF PROPOSED R-B 350 GUIDERAIL IS BEING ATTACHED TO A PARAPET USING EXISTING ANCHOR BOLTS FROM R-I GUIDERAIL INSTALLED AT A 33" (838) RAIL HEIGHT, A 4" (102) HEIGHT TRANSITION OVER 25' (7.62m) SHALL BE PROVIDED.
3. FOR EXISTING PARAPETS, USE THREE 1" (25) DIA. x 14" (356) LONG, FULLY THREADED, CHEMICALLY ANCHORED BOLTS AND WASHERS WITH 12" (305) EMBEDMENT DEPTH OR AS RECOMMENDED BY MANUFACTURER OF BONDING MATERIAL TO OBTAIN FULL STRENGTH OF ANCHOR BOLTS. FOR ANCHORAGE IN NEW PARAPETS, SEE STRUCTURE SHEETS.
4. USE CLASS B TYPE II (10 GAUGE) W-BEAM RAIL ELEMENT FOR INSTALLATIONS ON EXPRESSWAYS AND RAMPS.
5. TRAILING END ATTACHMENT MAY ALSO BE INSTALLED AT A VERTICAL FACE PARAPET OR RETAINING WALL ON ONE-WAY ROADWAYS ONLY.
6. MINIMUM RAIL HEIGHT FOR NEW CONSTRUCTION SHALL BE 29" (737) ± 1" (25).

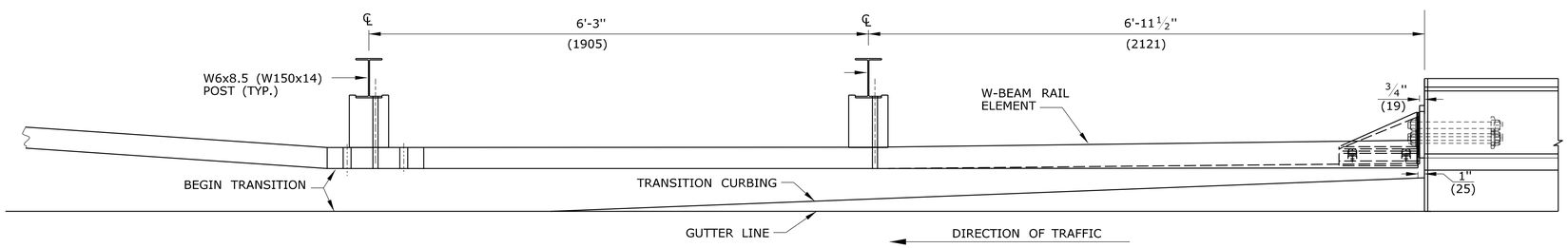

PLAN

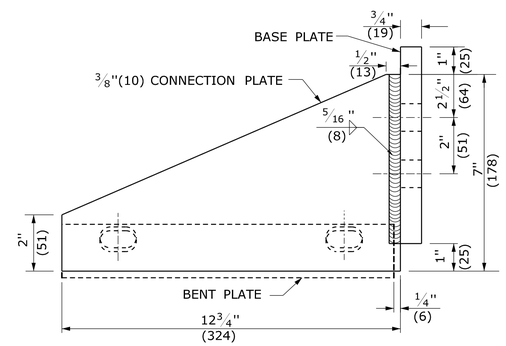

PLAN

CONNECTION PLATE DETAIL

(2 REQUIRED)

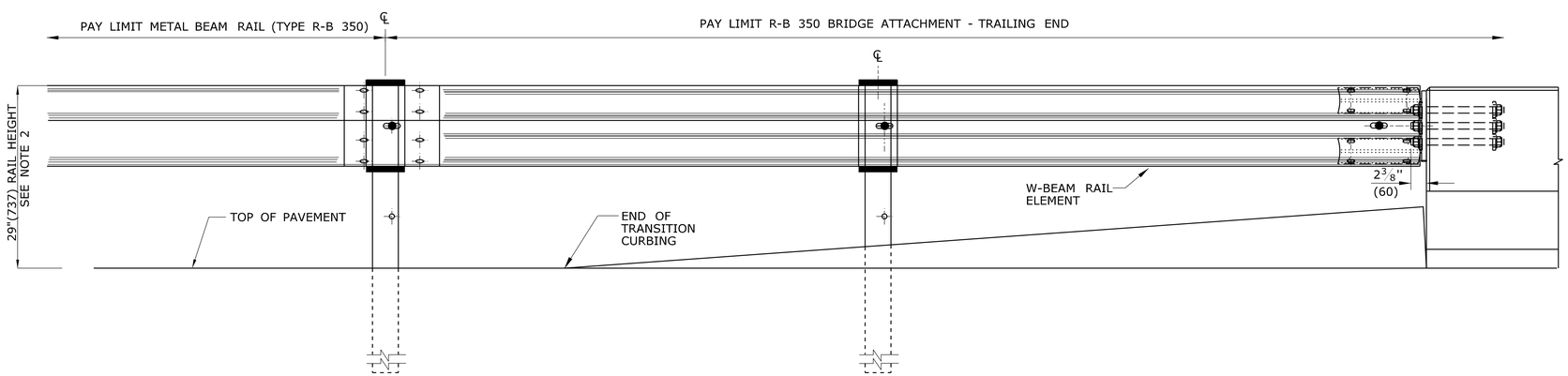

ELEVATION

ATTACHMENT AT TRAILING END OF BRIDGE PARAPET

(ONE-WAY ROADWAY ONLY)

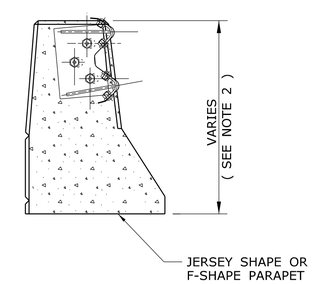

BASE PLATE AND ASSEMBLY ATTACHMENT

TO TRAILING END OF CONCRETE BARRIER

OR BRIDGE PARAPET (SEE NOTE 5)

ALL METRIC DIMENSIONS ARE IN MILLIMETERS (mm) UNLESS OTHERWISE NOTED.

REV.	DATE	REVISION DESCRIPTION	
1	6/11	REVISED NOTE 3 FOR USE OF CHEMICAL ANCHORS	-
-	-	-	-
-	-	-	-
-	-	-	-
-	-	-	-
-	-	-	-

THE INFORMATION, INCLUDING ESTIMATED QUANTITIES OF WORK, SHOWN ON THESE SHEETS IS BASED ON LIMITED INVESTIGATIONS BY THE STATE AND IS IN NO WAY WARRANTED TO INDICATE THE CONDITIONS OF ACTUAL QUANTITIES OF WORK WHICH WILL BE REQUIRED.

Plotted Date: 5/10/2011

NOT TO SCALE

STATE OF CONNECTICUT
DEPARTMENT OF TRANSPORTATION

Filename: CTDOT_HIGHWAY_STD_JUNE2011.dgn Model: 43 - HW-910_08

SUBMITTED BY: NAME/DATE/TIME:

APPROVED BY: NAME/DATE/TIME:

CTDOT
STANDARD SHEET

OFFICE OF ENGINEERING

STANDARD SHEET TITLE:

R-B 350 BRIDGE ATTACHMENT TRAILING END

STANDARD SHEET NO.:

HW-910_08

GENERAL NOTES:

1. DETAILS SHOW CONNECTION OF RAIL THRU TRANSITION. FLARE RATES, AND LATERAL PLACEMENT IN MEDIAN SHALL BE AS SHOWN ON THE PLANS.
2. THIS DETAIL CAN BE USED TO TRANSITION MD-B 350 GUIDERAIL TO MODIFIED R-I GUIDERAIL WITH SPLICE AT MID-SPAN.

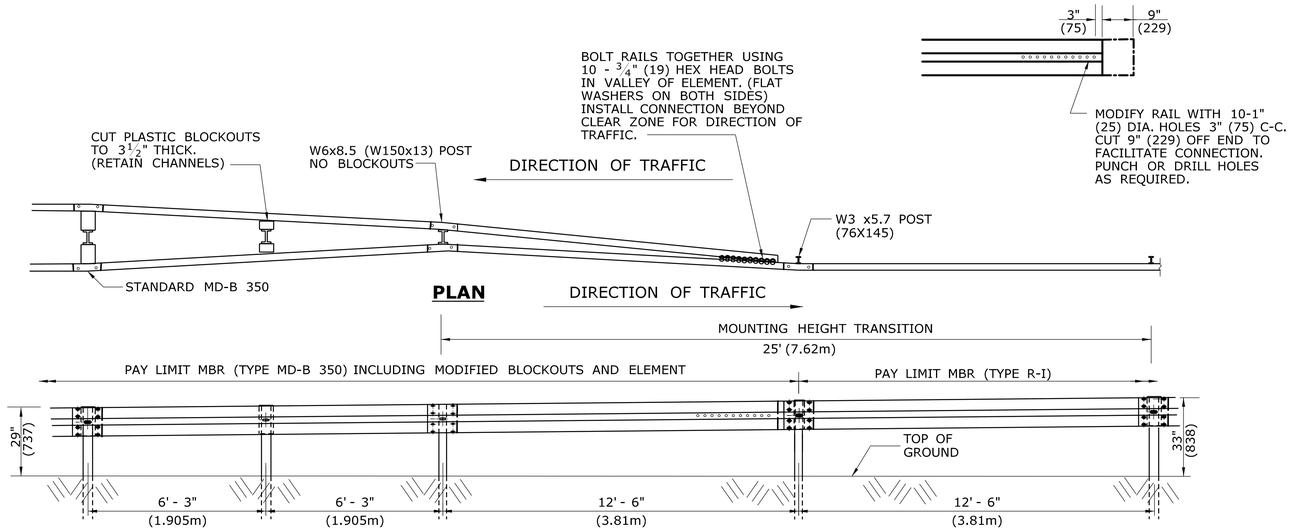

ELEVATION

TRANSITION OF METAL BEAM RAIL (TYPE MD-B 350) TO (TYPE R-I)

(SEE NOTE 2)

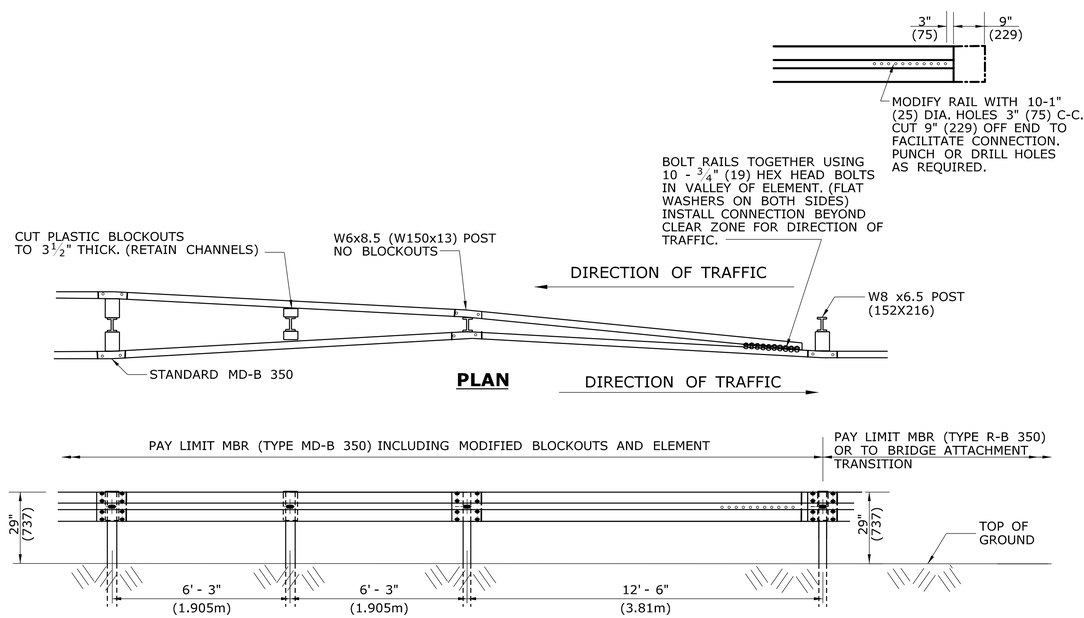

ELEVATION

TRANSITION OF METAL BEAM RAIL

(TYPE MD-B 350) TO (TYPE R-B 350) OR TO BRIDGE ATTACHMENT TRANSITION

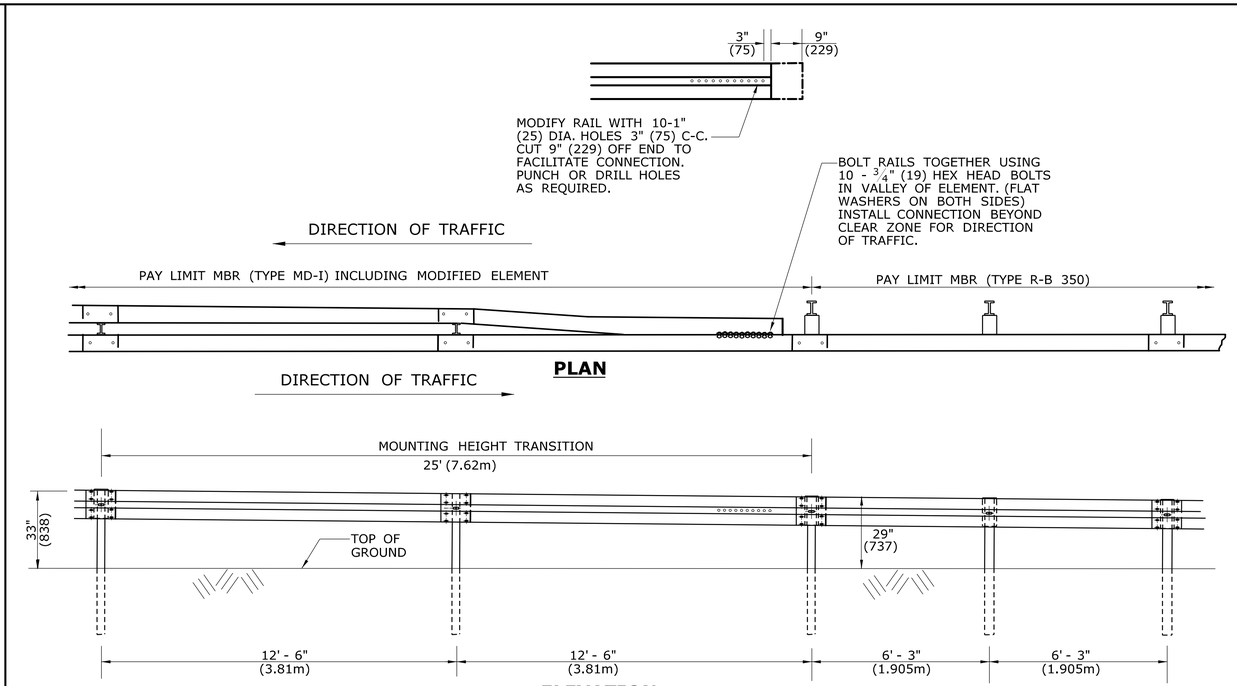

ELEVATION

TRANSITION OF METAL BEAM RAIL (TYPE MD-I) TO (TYPE R-B 350)

ALL METRIC DEMENSIONS ARE IN MILLIMETERS (mm) UNLESS OTHERWISE NOTED.

REV.	DATE	REVISION DESCRIPTION
1	9/6/11	ADD NOTE 2, REVISE TRANSITION NOTE & RESIZE NOTE
-	-	-
-	-	-
-	-	-
-	-	-
-	-	-

THE INFORMATION, INCLUDING ESTIMATED QUANTITIES OF WORK, SHOWN ON THESE SHEETS IS BASED ON LIMITED INVESTIGATIONS BY THE STATE AND IS IN NO WAY WARRANTED TO INDICATE THE CONDITIONS OF ACTUAL QUANTITIES OF WORK WHICH WILL BE REQUIRED.

Plotted Date: 11/16/2011

NOT TO SCALE

STATE OF CONNECTICUT
DEPARTMENT OF TRANSPORTATION

Filename: working_revisions.dgn Model: HW-910_09a

SUBMITTED BY: NAME/DATE/TIME:

APPROVED BY: NAME/DATE/TIME:

CTDOT STANDARD SHEET

OFFICE OF ENGINEERING

STANDARD SHEET TITLE:

MISCELLANEOUS GUIDERAIL TRANSITIONS

STANDARD SHEET NO.:

HW-910_09a

GENERAL NOTES:

1. POST PLACEMENT WITHIN THE LIMITS OF THE TRANSITION SHOULD BE ADJUSTED TO ACCOMMODATE THE INTRODUCTION OF THE BLOCKOUT WHILE MAINTAINING A SMOOTH RAIL LINE.
2. LATERAL PLACEMENT OF RAIL IN MEDIAN SHALL BE AS SHOWN ON THE PLANS.
3. CROSS SECTION GRADE IN MEDIAN THRU TRANSITION AREA SHALL NOT EXCEED 10:1. AVOID PLACEMENTF RAIL ON CROSS SLOPES STEEPER THAN 6:1. AJUST RAIL HEIGHT WHEN RAIL IS GREATER THAN 2' FROM EDGE OF ROAD.
4. PLACEMENT OF R-B 350 OR APPROPRIATE SYSTEMS ARE BASED ON DEFLECTION REQUIREMENTS FOR FIXED OBJECT. SEE STANDARD SHEET HW-910_04.

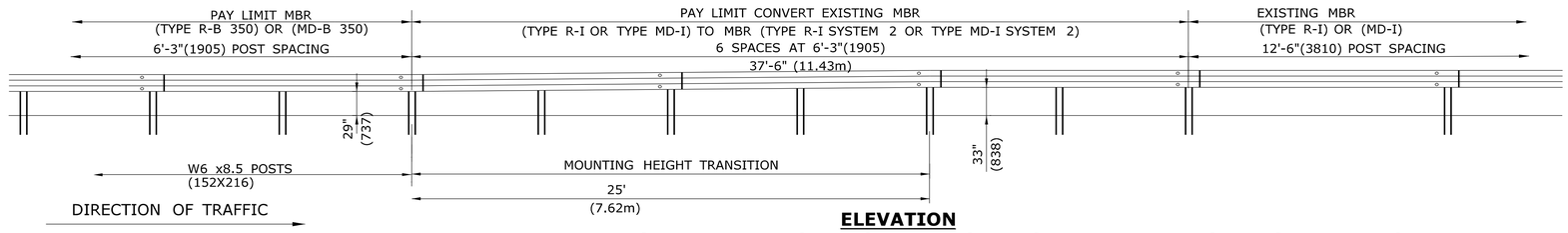

ELEVATION

STRENGTH TRANSITION OF (TYPE R-B 350) TO (TYPE R-I) OR (TYPE MD-B 350) TO (TYPE MD-I)

IN THE DIRECTION OF TRAFFIC

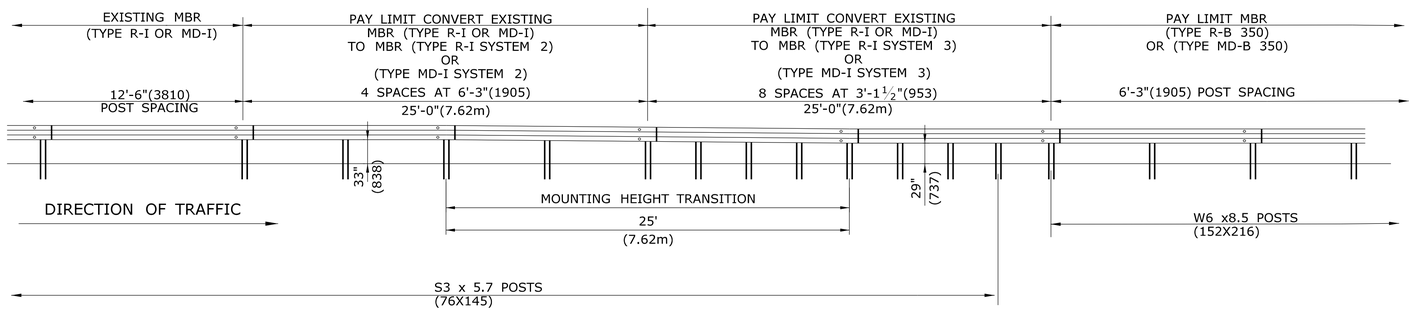

ELEVATION

STRENGTH TRANSITION OF (TYPE R-I) TO (TYPE R-B 350)

IN THE DIRECTION OF TRAFFIC OR

(TYPE MD-I) TO (TYPE MD-B 350)

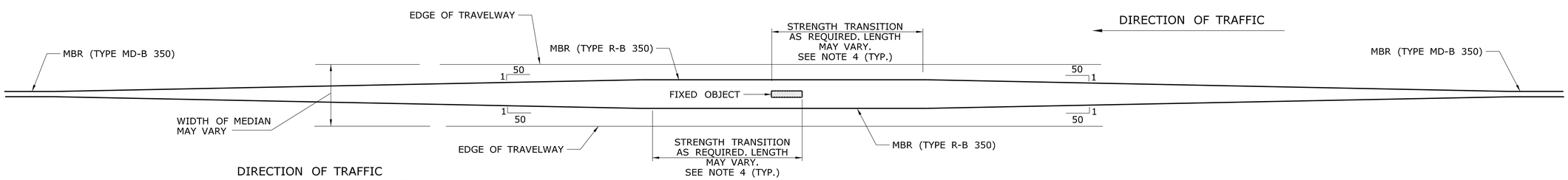

PLAN

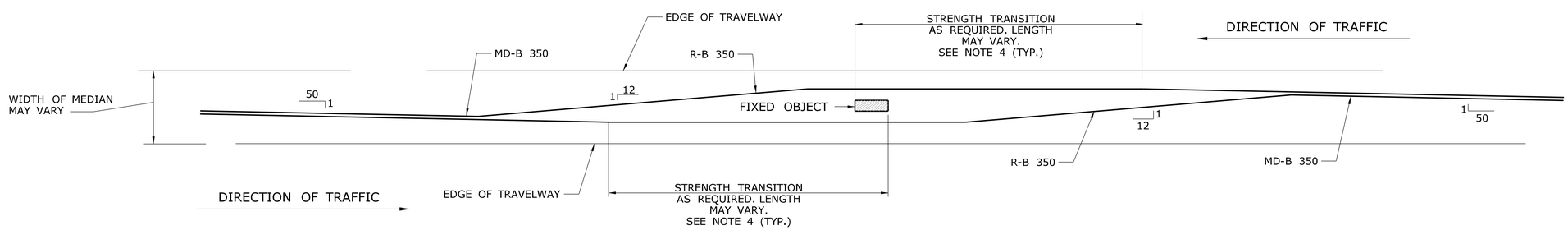

PLAN

TYPICAL MEDIAN GUIDERAIL TRANSITIONS FOR FIXED OBJECT

ALL METRIC DEMENSIONS ARE IN MILLIMETERS (mm) UNLESS OTHERWISE NOTED.

REV.	DATE	REVISION DESCRIPTION	
1	1/12	ADD NOTE 4 . REVISE TITLE	-
2	7/12	ERRATA	-
-	-	-	-
-	-	-	-
-	-	-	-
-	-	-	-

THE INFORMATION, INCLUDING ESTIMATED QUANTITIES OF WORK, SHOWN ON THESE SHEETS IS BASED ON LIMITED INVESTIGATIONS BY THE STATE AND IS IN NO WAY WARRANTED TO INDICATE THE CONDITIONS OF ACTUAL QUANTITIES OF WORK WHICH WILL BE REQUIRED.

Plotted Date: 7/18/2012

NOT TO SCALE

STATE OF CONNECTICUT
DEPARTMENT OF TRANSPORTATION

Filename: CTDOT_HIGHWAY_STD.dgn Model: 51 - HW-0910_09b

SUBMITTED BY: NAME/DATE/TIME:

APPROVED BY: NAME/DATE/TIME:

CTDOT
STANDARD SHEET

OFFICE OF ENGINEERING

STANDARD SHEET TITLE:

MISCELLANEOUS GUIDERAIL TRANSITIONS SHEET 2

STANDARD SHEET NO.:

HW-910_09b

GENERAL NOTES:

1.) FOR CURVES WITH R < 1525' (464.8m), 8"(203) x 6"(152) BOX BEAM ELEMENT SHALL BE SHOP FABRACATED. PAYMENT FOR SHOP FABRICATION SHALL BE INCLUDED WITH THE ITEM 8"(203) x 6"(152) BOX BEAM GUIDERAIL.

2.) TO DEVELOPE PROPER TENSION FOR DEFLECTION MIN. LENGTH = 125' (38.1m)

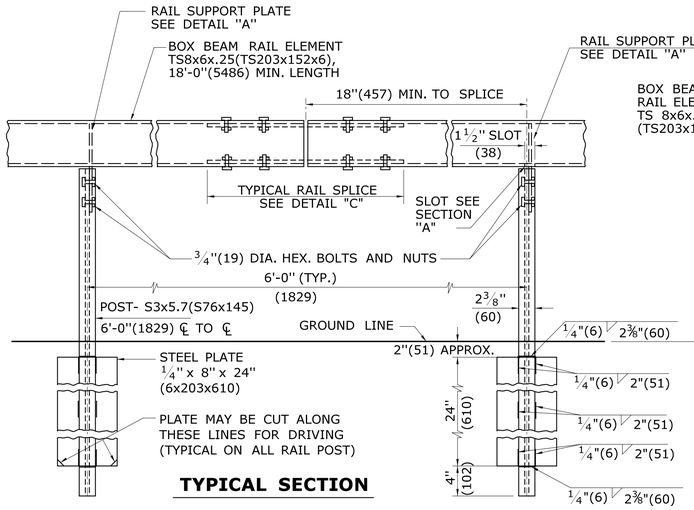

TYPICAL SECTION

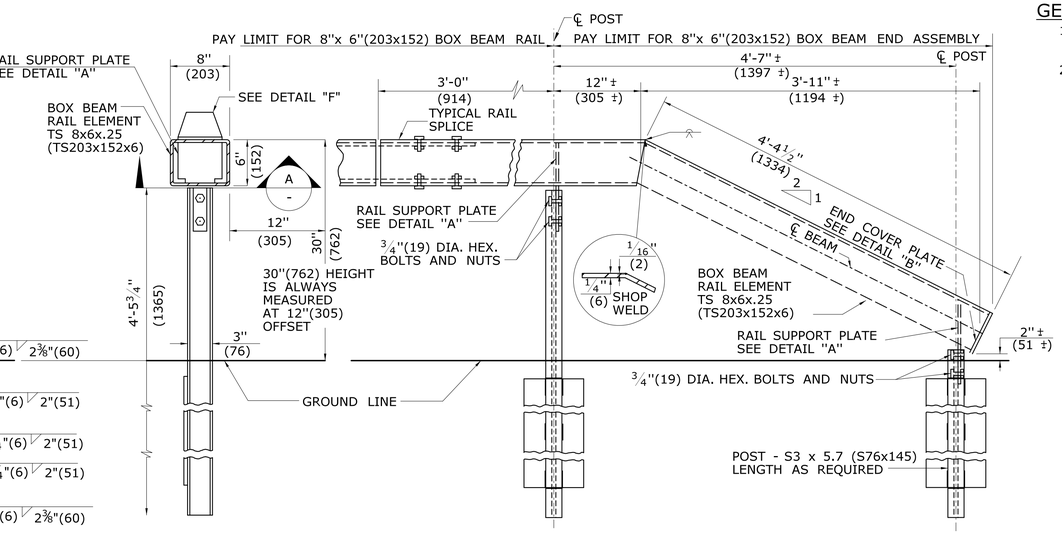

TYPICAL END ASSEMBLY

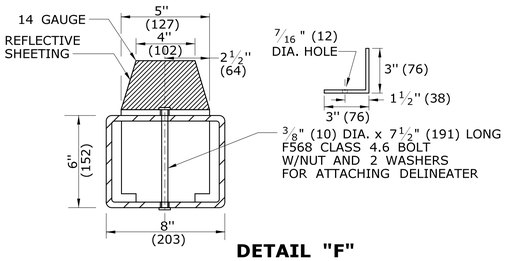

DETAIL "F"

DELINEATOR ATTACHMENT DETAIL

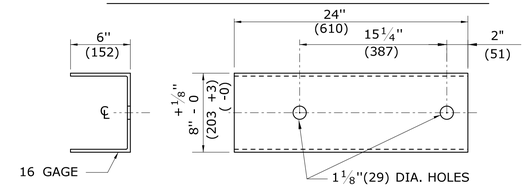

DETAIL "E"

COVER PLATE

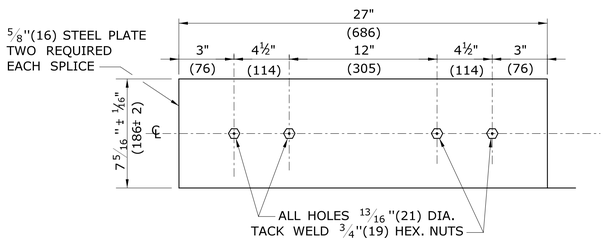

DETAIL "C"

SPLICE PLATE

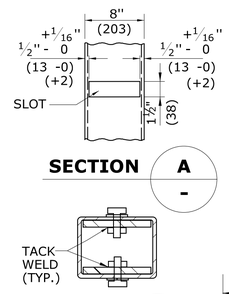

SECTION A

SECTION B

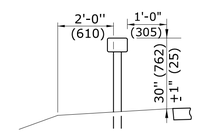

TYPICAL CROSS SECTION

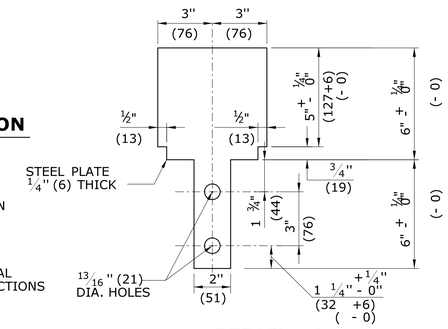

DETAIL "A"

RAIL SUPPORT PLATE

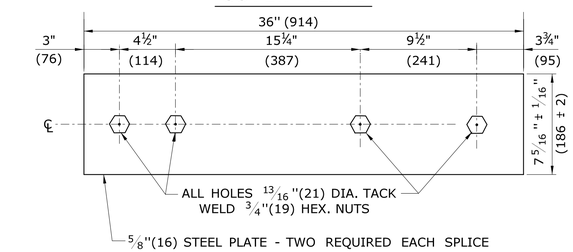

DETAIL "D"

SPLICE PLATE FOR EXPANSION JOINT

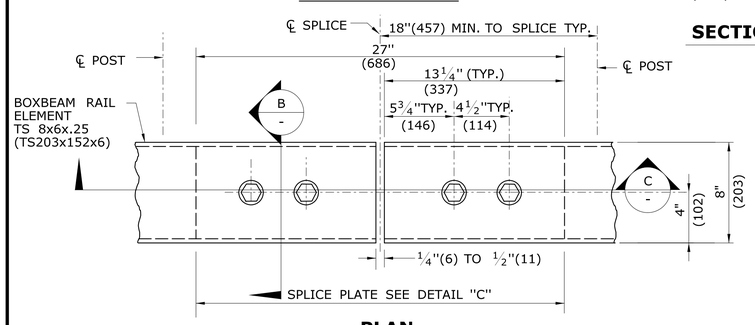

PLAN

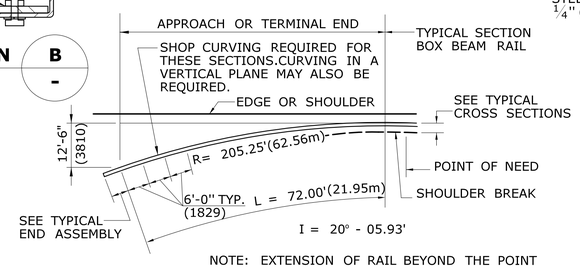

NOTE: EXTENSION OF RAIL BEYOND THE POINT OF NEED AS SHOWN ON THE PLANS. MINIMUM LENGTH 72'(21.95m)

PLAN

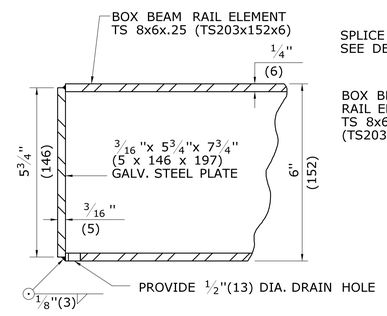

DETAIL "B"

END COVER PLATE

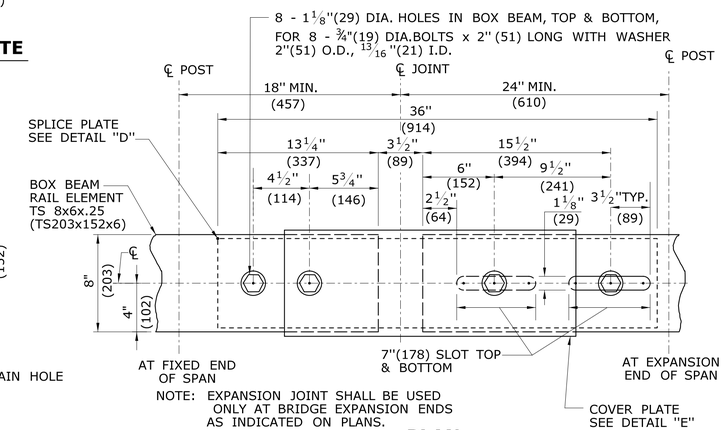

NOTE: EXPANSION JOINT SHALL BE USED ONLY AT BRIDGE EXPANSION ENDS AS INDICATED ON PLANS.

PLAN

TYPICAL EXPANSION JOINT DETAIL

NOTE: WELD OR GALVANIZING PROTRUSIONS NOT PERMITTED ON TOP OR BOTTOM INSIDE WALLS IN SPLICE AREA

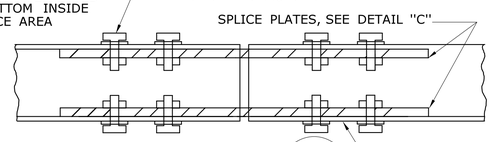

SECTION C

TYPICAL SPLICE DETAIL

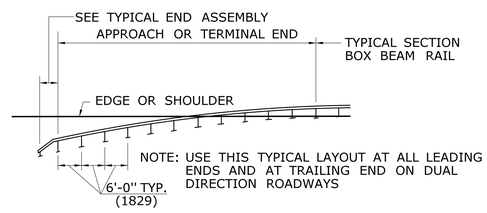

NOTE: USE THIS TYPICAL LAYOUT AT ALL LEADING ENDS AND AT TRAILING END ON DUAL DIRECTION ROADWAYS

ELEVATION

TYPICAL LAYOUT

ALL METRIC DIMENSIONS ARE IN MILLIMETERS (mm) UNLESS OTHERWISE NOTED

REV.	DATE	REVISION DESCRIPTION
1	7/12	ADD NOTE 2 TO GENERAL NOTES
2	7/13	ADD DIMENSION ± 1"
-	-	-
-	-	-
-	-	-
-	-	-

THE INFORMATION, INCLUDING ESTIMATED QUANTITIES OF WORK, SHOWN ON THESE SHEETS IS BASED ON LIMITED INVESTIGATIONS BY THE STATE AND IS IN NO WAY WARRANTED TO INDICATE THE CONDITIONS OF ACTUAL QUANTITIES OF WORK WHICH WILL BE REQUIRED.

Plotted Date: 3/28/2013

NOT TO SCALE

STATE OF CONNECTICUT
DEPARTMENT OF TRANSPORTATION

Filename: CTDOT_HIGHWAY_STD2013.dgn Model: 53- HW-910_10

SUBMITTED BY: NAME/DATE/TIME:

APPROVED BY: NAME/DATE/TIME:

CTDOT STANDARD SHEET

OFFICE OF ENGINEERING

STANDARD SHEET TITLE:

METAL BEAM RAIL 8" (203) X 6" (152) BOX BEAM

STANDARD SHEET NO.:

HW-910_10

GENERAL NOTES:

1. NO WASHERS ARE USED ON THE 5/8" (16) DIA. BUTTON HEAD BOLTS CONNECTING THE RAIL TO THE CONTROLLED RELEASING TERMINAL (CRT) POSTS.
2. THE RAIL IS NOT BOLTED TO THE CRT POST AT THE CENTER OF THE NOSE AS SHOWN FOR THE 8'-6" (2590) RADIUS CURVED GUIDERAIL TREATMENT ONLY.
3. THE CURVED GUIDERAIL SECTION SHALL BE SHOP BENT.
4. THE SLOPE FROM THE EDGE OF THE SHOULDER TO THE FACE OF THE RAIL SHALL BE 10:1 OR FLATTER. NO CURBING SHALL BE INSTALLED WITHIN THE PAY LIMIT OF THE CURVED GUIDERAIL TREATMENT.
5. THIS SYSTEM SHALL BE USED ONLY ON ROADS WITH DESIGN SPEEDS ≤ 50 mph (80 kph).
6. MAINTAIN MINIMUM 27 3/4" (706) RAIL HEIGHT THROUGH RADIUS.

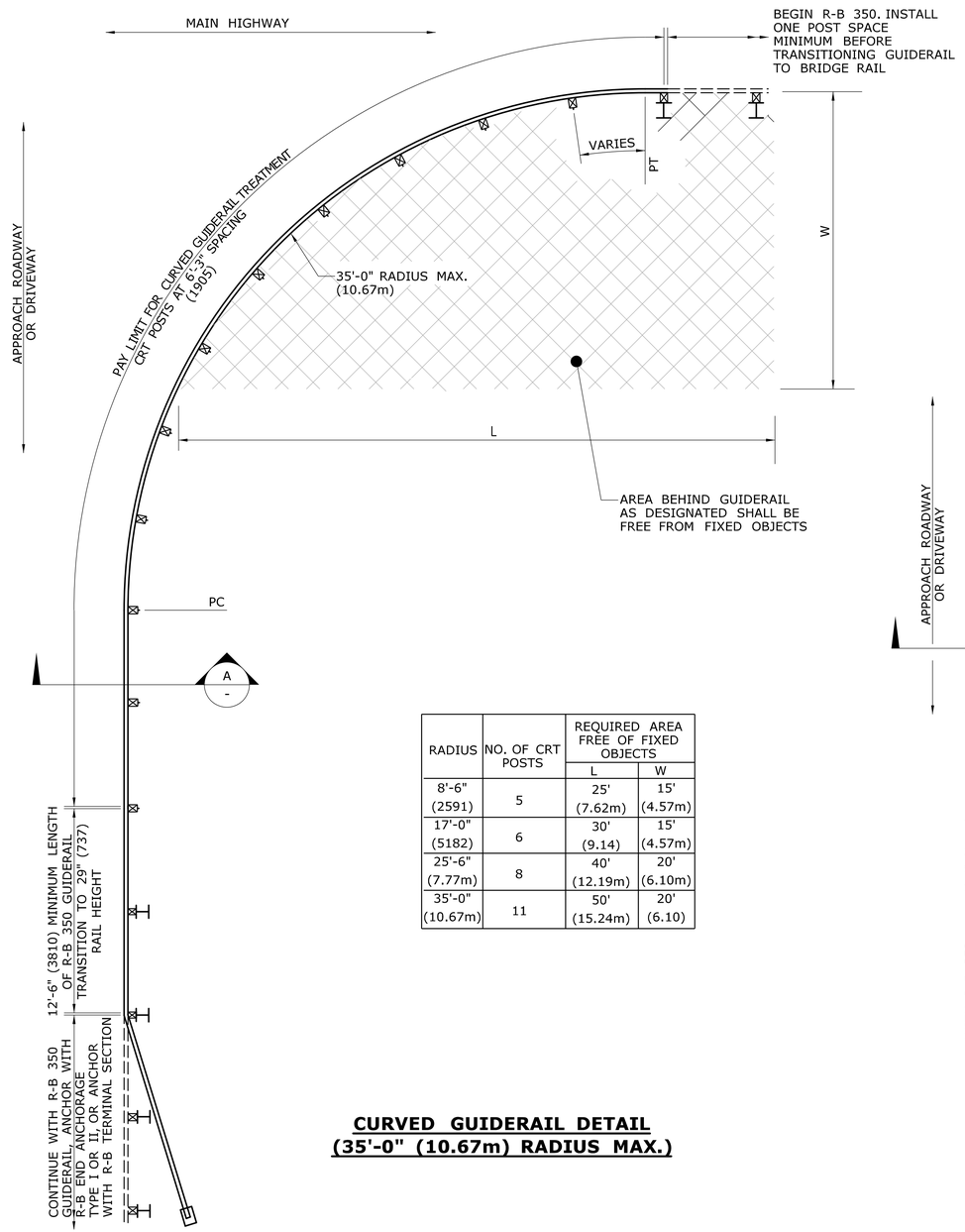

RADIUS	NO. OF CRT POSTS	REQUIRED AREA FREE OF FIXED OBJECTS	
		L	W
8'-6" (2591)	5	25' (7.62m)	15' (4.57m)
17'-0" (5182)	6	30' (9.14)	15' (4.57m)
25'-6" (7.77m)	8	40' (12.19m)	20' (6.10m)
35'-0" (10.67m)	11	50' (15.24m)	20' (6.10)

CURVED GUIDERAIL DETAIL (35'-0" (10.67m) RADIUS MAX.)

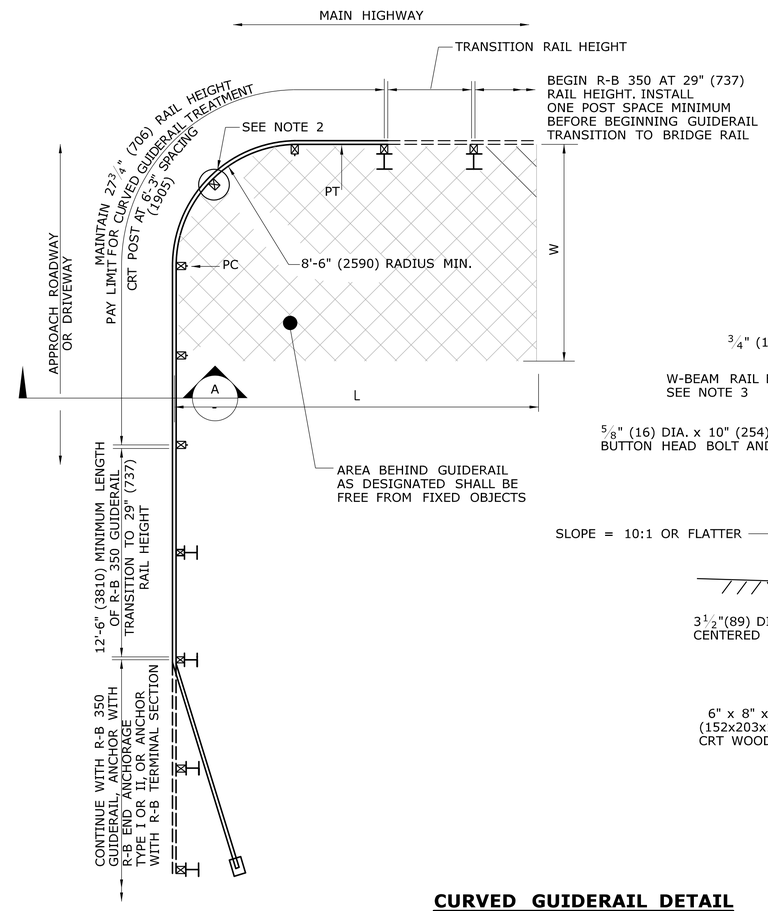

CURVED GUIDERAIL DETAIL (8'-6"(2590) RADIUS MIN.)

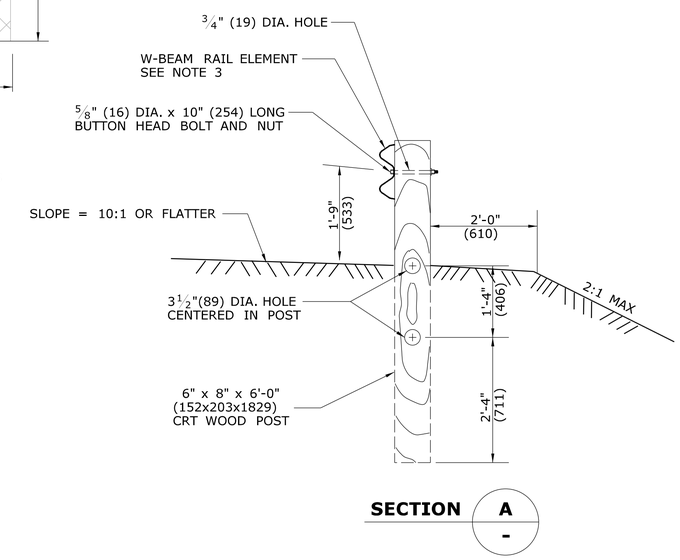

ALL METRIC DEMENSIONS ARE IN MILLIMETERS (mm) UNLESS OTHERWISE NOTED.

REV.	DATE	REVISION DESCRIPTION
-	-	-
-	-	-
-	-	-
-	-	-
-	-	-
-	-	-

THE INFORMATION, INCLUDING ESTIMATED QUANTITIES OF WORK, SHOWN ON THESE SHEETS IS BASED ON LIMITED INVESTIGATIONS BY THE STATE AND IS IN NO WAY WARRANTED TO INDICATE THE CONDITIONS OF ACTUAL QUANTITIES OF WORK WHICH WILL BE REQUIRED.

Plotted Date: 9/6/2011

NOT TO SCALE

STATE OF CONNECTICUT
DEPARTMENT OF TRANSPORTATION

Filename: CTDOT_HIGHWAY_STD_JUNE2011.dgn Model: 46 - HW-910_11

SUBMITTED BY: NAME/DATE/TIME:

APPROVED BY: NAME/DATE/TIME:

CTDOT STANDARD SHEET

OFFICE OF ENGINEERING

STANDARD SHEET TITLE:

CURVED GUIDERAIL TREATMENT DETAIL

STANDARD SHEET NO.:

HW-910_11

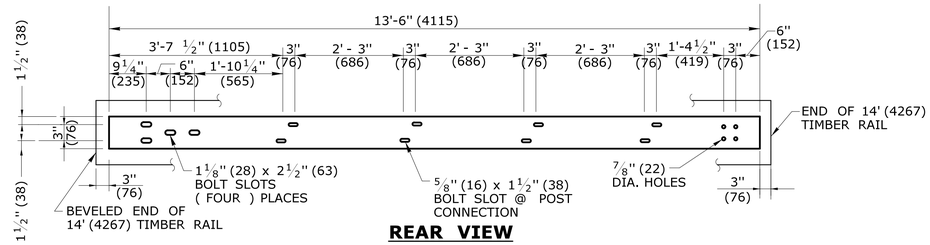

REAR VIEW

STEEL TRANSITION RAIL 6" x 3/8" x 13'-6" (152x9x4115) FOR LEADING END ATTACHMENT

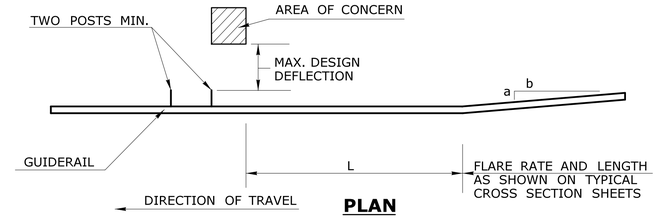

PLAN

APPROACH TO FIXED OBJECTS SYSTEM 2 AND 3

GENERAL NOTES:

1. THIS DRAWING SHOWS LEADING END ATTACHMENT TO PROPOSED BARRIER/PARAPET. AT EXISTING PARAPETS ATTACH GUIDERAIL USING D.O.T. APPROVED CHEMICAL ANCHORS.
2. PRIOR TO GUIDERAIL POST INSTALLATION THE CONTRACTOR SHALL INVESTIGATE POST LOCATIONS FOR THE PRESENCE AND DEPTH OF LEDGE.
3. 20" (507) DIA. EXCAVATED HOLE SHALL BE BACKFILLED WITH SUITABLE MATERIAL, OR GRANULAR FILL COMPACTED IN 6" (150) LIFTS BEFORE DRIVING POST OR POSTS MAY BE SET IN EXCAVATED HOLE AND BACKFILLED WITH CONTROLLED LOW STRENGTH MATERIAL (CLSM).

Maximum Design Deflection (ft) (mm)	Area Of Concern Plus 2 Posts (see sketch)	SYSTEM 3	SYSTEM 2	Standard System	L
		W6x15 (W150x22) Posts Spaced at 2'- 6" (762)	W6x15 (W150x22) Posts Spaced at 5' (1524)	W6x15 (W150x22) Posts Spaced at 10' (3048)	Min. Length Needed
1' (305)	System 3	10' (3048)	10' (3048)	50' (16.40m)	70' (21.34m)
2' - 6" (762)	System 2	—	10' (3048)	60' (19.68m)	70' (21.34m)
4' (1219)	Standard System	—	—	70' (21.34m)	70' (21.34m)

MERRITT PARKWAY GUIDERAIL DESIGN DEFLECTION CHART

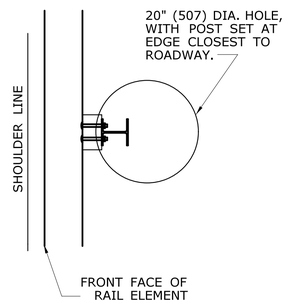

PLAN

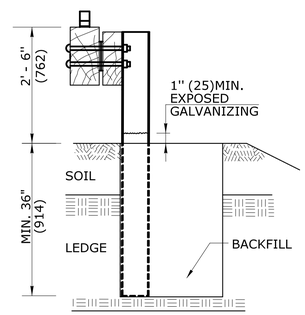

CASE 1

(CURBLESS SECTION SHOWN)

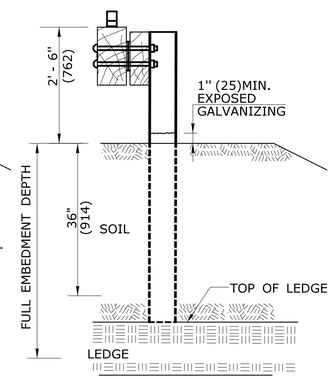

CASE 2

(CURBLESS SECTION SHOWN)

CASE 1: IF LEDGE IS LOCATED WITHIN 36" (914) OF THE FINISHED GRADE AT THE POST LOCATION A 20" (507) DIAMETER HOLE SHALL BE DRILLED IN THE LEDGE TO THE MINIMUM EMBEDMENT DEPTH OF 36" (914) AND THE POST SHALL BE CUT AND DRIVEN TO ACHIEVE THIS DEPTH.

CASE 2: IF LEDGE IS LOCATED AT A DEPTH GREATER THAN 36" (914) BUT LESS THAN THE FULL EMBEDMENT DEPTH THE POST SHALL BE CUT AND DRIVEN TO ACHIEVE EMBEDMENT TO THE DEPTH OF THE TOP OF LEDGE.

DRILLING HOLE FOR GUIDERAIL POST

(SEE GENERAL NOTES 2-3)

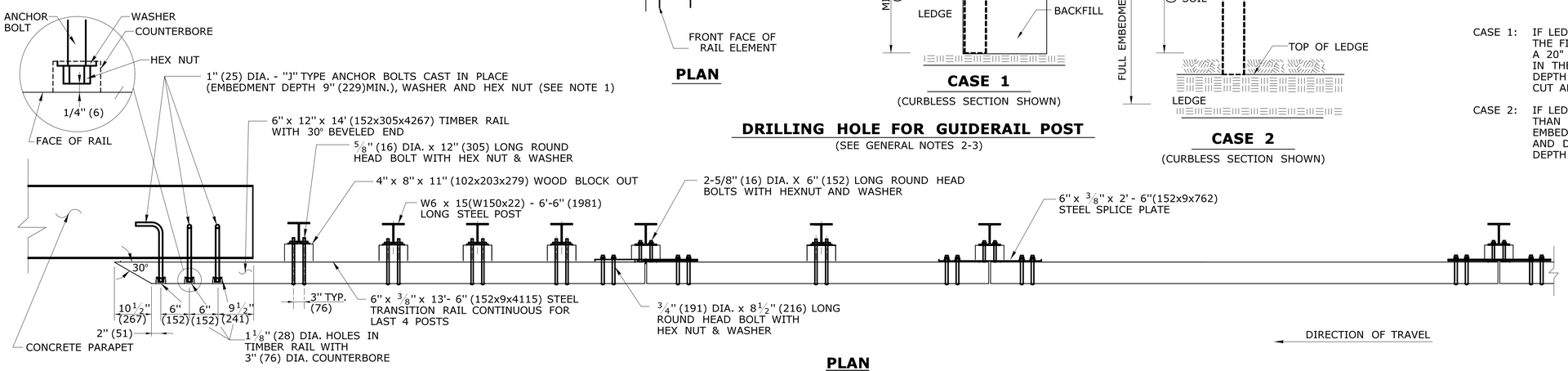

PLAN

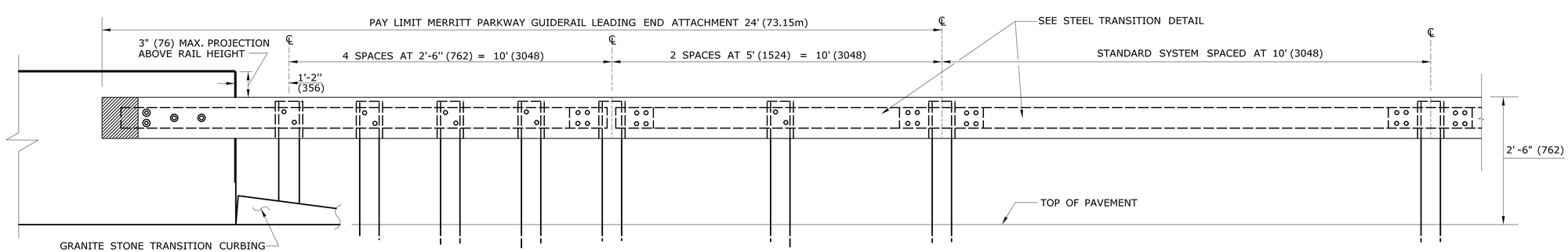

ELEVATION

ATTACHMENT AT LEADING END (VERTICAL SHAPE BARRIER SHOWN) (FRONT VIEW)

(SEE GENERAL NOTES 1)

ALL METRIC DIMENSIONS ARE IN MILLIMETERS (mm) UNLESS OTHERWISE NOTED.

REV.	DATE	REVISION DESCRIPTION
1	6/11	REVISED ELEVATION VIEW OF ATTACHMENT
2	7/13	REVISED POST IN LEDGE & ADDED COUNTERBORE DETAIL
-	-	-
-	-	-
-	-	-
-	-	-

THE INFORMATION, INCLUDING ESTIMATED QUANTITIES OF WORK, SHOWN ON THESE SHEETS IS BASED ON LIMITED INVESTIGATIONS BY THE STATE AND IS IN NO WAY WARRANTED TO INDICATE THE CONDITIONS OF ACTUAL QUANTITIES OF WORK WHICH WILL BE REQUIRED.

Plotted Date: 6/14/2013

NOT TO SCALE

STATE OF CONNECTICUT
DEPARTMENT OF TRANSPORTATION

Filename: CTDOT_HIGHWAY_STD2013.dgn Model: 55 - HW-910_12a

SUBMITTED BY: NAME/DATE/TIME:

APPROVED BY: NAME/DATE/TIME:

CTDOT STANDARD SHEET

OFFICE OF ENGINEERING

STANDARD SHEET TITLE:

MERRITT PARKWAY GUIDERAIL LEADING END ATTACHMENT AND SYSTEMS 2 & 3

STANDARD SHEET NO.: HW-910_12a

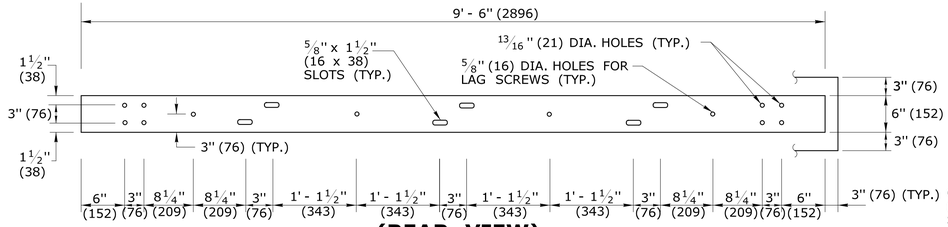

(REAR VIEW)
STANDARD STEEL RAIL DETAIL
6" x 3/8" x 9'-6"
(152x9x2896)

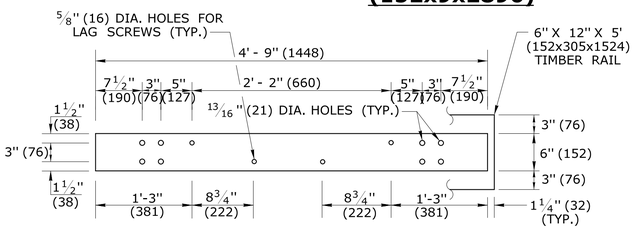

STEEL RAIL DETAIL
6' x 3/8" x 4'-9"
(1829 x 9 x 1448)
FOR CURVES WITH R < 70' (21.3m)

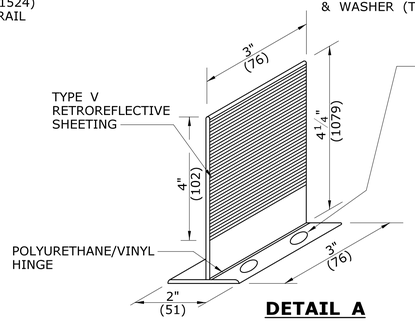

DETAIL A
DELINEATOR

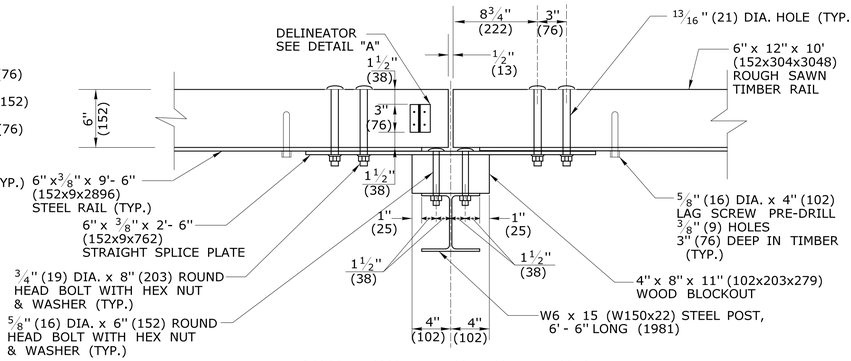

POST CONNECTION FOR
STRAIGHT SECTIONS

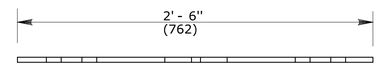

ELEVATION
STRAIGHT SPLICE PLATE

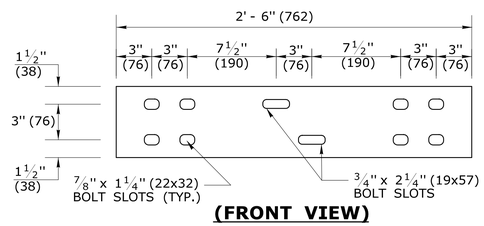

(FRONT VIEW)
STEEL SPLICE PLATE DETAIL
6" x 3/8" x 2'- 6"
(152x9x762)

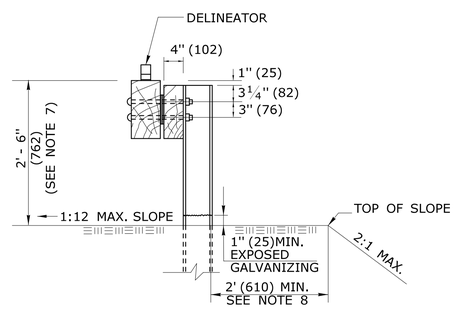

SECTION A
(NO CURB)

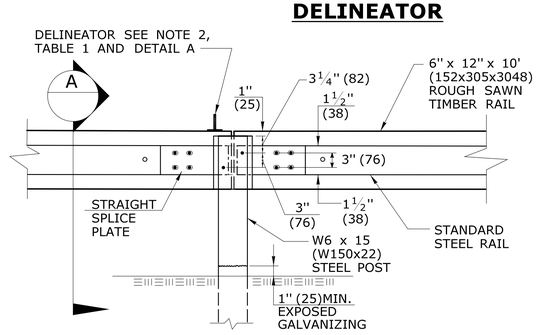

REAR VIEW ELEVATION
POST CONNECTION

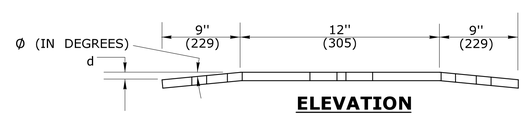

ELEVATION
BENT SPLICE PLATE

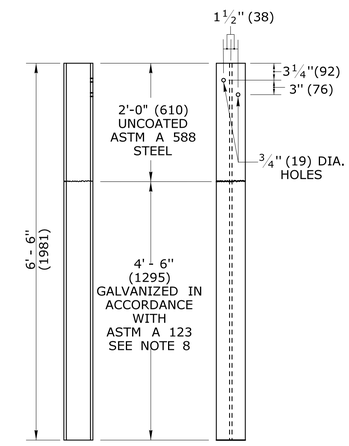

SIDE VIEW FRONT VIEW
POST DETAIL
W6 X 15
(W150x22)
WITH CURBING

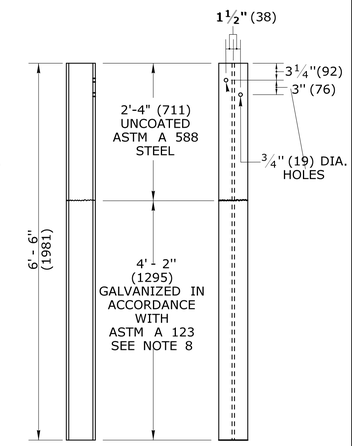

SIDE VIEW FRONT VIEW
POST DETAIL
W6 X 15
(W150x22)
NO CURBING

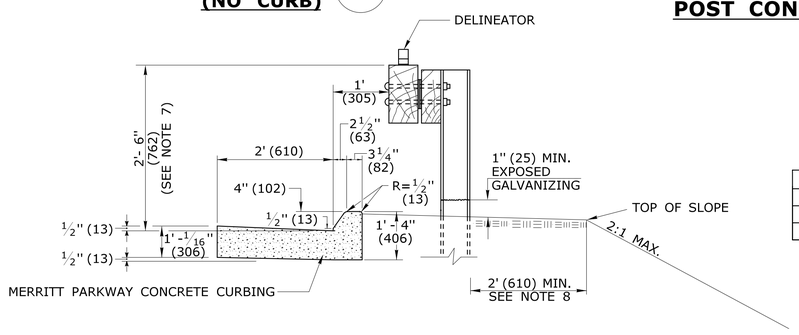

MERRITT PARKWAY CONCRETE CURBING WITH MERRITT PARKWAY GUIDERAIL

TABLE 1

DELINEATOR SPACING	
CURVE RADIUS	SPACE
< 300' (91.4m)	20' (6.10m)
≥ 300' (91.4m)	50' (15.2m)

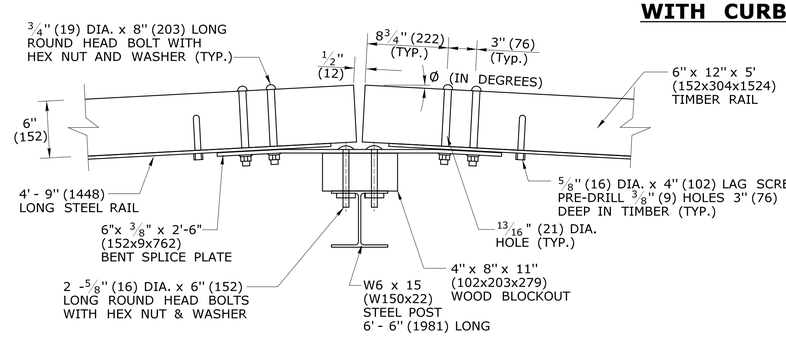

POST CONNECTION
FOR CURVES WITH R < 70' (21.3m)

GENERAL NOTES:

1. MATERIALS AND CONSTRUCTION OF THE MERRITT PARKWAY GUIDERAIL SHALL CONFORM TO SPECIAL PROVISION PROVIDED WITH THE PROJECT.
2. DELINEATORS SHALL BE PLASTIC INVERTED T-SECTIONS IN ACCORDANCE WITH DETAIL "A". REFLECTORS SHALL BE SPACED IN ACCORDANCE WITH TABLE 1 , AND POSITIONED PERPENDICULAR TO THE ADJACENT EDGE OF LANE. DO NOT ATTACH REFLECTORS ON FLARE OR TERMINAL SECTIONS. REFLECTIVE SHEETING SHALL BE SILVER-WHITE ON ALL RAIL SECTIONS ADJACENT TO THE RIGHT SHOULDER, AND YELLOW ON RAIL SECTIONS ADJACENT TO THE LEFT SHOULDER OF TRAVEL LANES. DELINEATORS SHALL BE INCLUDED IN THE COST FOR "MERRITT PARKWAY GUIDERAIL."
3. TWO ADDITIONAL 5/8" (16) DIA. X 4"(102) LONG LAG SCREWS AND WASHERS SHALL BE INSTALLED AT ALL MID-SPAN POINTS FOR STANDARD SYSTEMS.
4. ALL CONNECTION HARDWARE SHALL BE SUFFICIENTLY TIGHTENED TO ACCOMMODATE FOR SHRINKAGE OF THE WOOD ELEMENTS.
5. WHEN FURNISHING THE SHOP BENT SPLICE PLATES, USE THE MINIMUM BEND ANGLE AS SHOWN IN TABLE 2.
6. FOR RAILING SET ON A CURVE WITH RADII < 70' (21.3m) SPACE POSTS AT 5' (1524).
7. GUIDERAIL HEIGHT MAY VARY UP TO 2" (51) PLUS OR MINUS THE HEIGHT SHOWN IN THE DETAILS TO ACHIEVE A SMOOTH AND CONTINUOUS GUIDERAIL PROFILE.
8. 7'-6" (2286) LONG POSTS MAY BE USED IN LOCATIONS WHERE 2' (610)MIN SHELF IS NOT ATTAINABLE. GALVANIZED COATING LIMITS SHALL BE INCREASED BY 1' (305). PAYMENT FOR EXTRA LONG POSTS SHALL BE INCLUDED WITH THE ITEM FOR MERRITT PARKWAY GUIDERAIL.

TABLE 2

Radius R (ft.)(m)	Ø (Degrees)	d (in.)(mm)
35 (10.7)Min.	4.10	5/8(16)
40 (12.2)	3.58	9/16 (14)
45 (13.7)	3.18	1/2(13)
50 (15.2)	2.86	7/16 (11)
55 (16.8)	2.60	7/16 (11)
60 (18.3)	2.40	3/8(9)
65 (19.8)	2.20	3/8(9)
70 (21.3)	2.05	5/16 (8)
Over 70 (21.3)	Flat	0

ALL METRIC DIMENSIONS ARE IN MILLIMETERS (mm) UNLESS OTHERWISE NOTED.

REV.	DATE	REVISION DESCRIPTION
1	6/11	REVISED STEEL RAIL REAR VIEW
2	7/13	ADDED NOTE 8 AND REVISED GALVANIZE DIMENSION
-	-	-
-	-	-
-	-	-
-	-	-

THE INFORMATION, INCLUDING ESTIMATED QUANTITIES OF WORK, SHOWN ON THESE SHEETS IS BASED ON LIMITED INVESTIGATIONS BY THE STATE AND IS IN NO WAY WARRANTED TO INDICATE THE CONDITIONS OF ACTUAL QUANTITIES OF WORK WHICH WILL BE REQUIRED.

Plotted Date: 6/14/2013

NOT TO SCALE

STATE OF CONNECTICUT
DEPARTMENT OF TRANSPORTATION

Filename: CTDOT_HIGHWAY_STD2013.dgn Model: 56 - HW-910_12b

SUBMITTED BY: NAME/DATE/TIME:

APPROVED BY: NAME/DATE/TIME:

CTDOT STANDARD SHEET

OFFICE OF ENGINEERING

STANDARD SHEET TITLE:

MERRITT PARKWAY GUIDERAIL HARDWARE DETAILS

STANDARD SHEET NO.:

HW-910_12b

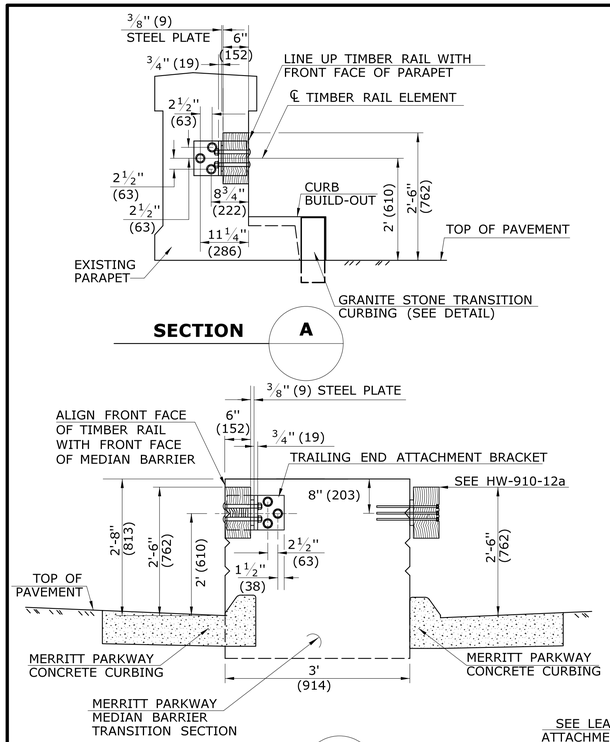

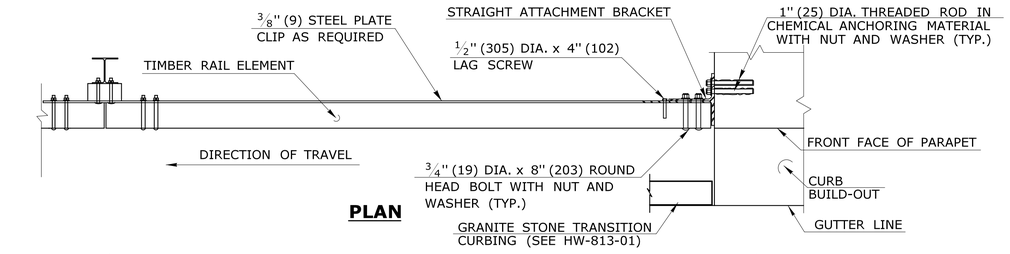

PLAN

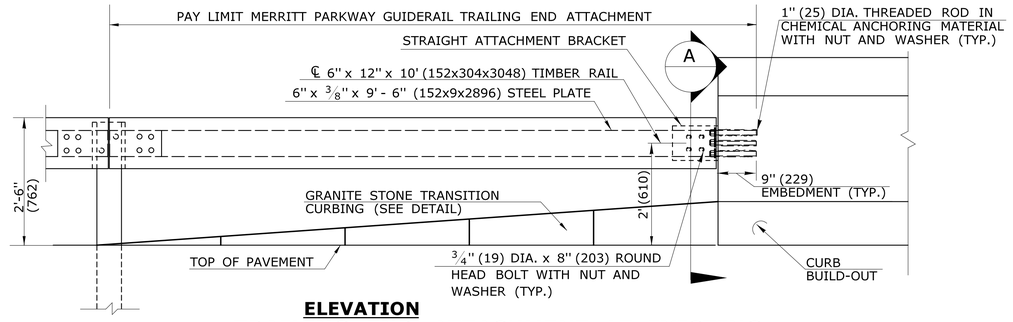

ELEVATION

TRAILING END ATTACHMENT AT EXISTING BRIDGE PARAPET WITH CURB BUILD-OUT

GENERAL NOTES:

1. THREADED RODS SHALL CONFORM TO THE REQUIREMENTS OF ASTM A325, WITH NUTS CONFORMING TO ASTM A563, GRADE C. CIRCULAR HARDENED WASHERS SHALL CONFORM TO ASTM F436. THREADED NUTS AND WASHERS IN CONTACT WITH CONCRETE SHALL BE GALVANIZED IN ACCORDANCE WITH ASTM A153. ROUND HEAD BOLTS SHALL CONFORM TO THE SPECIAL PROVISIONS PROVIDED WITH THE PROJECT.

2. CHEMICAL ANCHORING MATERIAL SHALL CONFORM TO SECTION M.03, SUBARTICLE M.03.01-15

3. ATTACHMENT BRACKETS SHALL CONFORM TO ASTM A36 AND BE GALVANIZED IN ACCORDANCE WITH ASTM A123.

4. THE PAY LIMIT FOR TRAILING END ATTACHMENT INCLUDES ALL HARDWARE AND RAIL ELEMENTS TO AND INCLUDING THE FIRST POST.

5. ALL RUNS OF MERRITT PARKWAY MEDIAN BARRIER SHALL INCLUDE MERRITT PARKWAY MEDIAN BARRIER TRANSITIONS SECTIONS AT BOTH ENDS.

6. THE END OF TIMBER RAIL ATTACHED TO THE ANGLED ATTACHMENT BRACKET FOR THE RIPAWAM RIVER SHALL BE MITERED TO MATCH THE ANGLE OF THE BRACKET AND PARAPET.

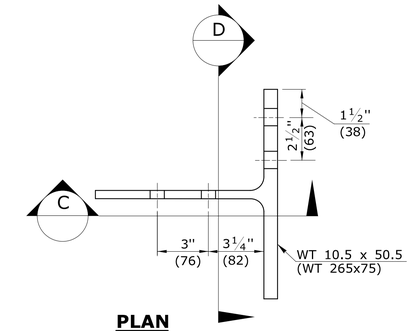

PLAN

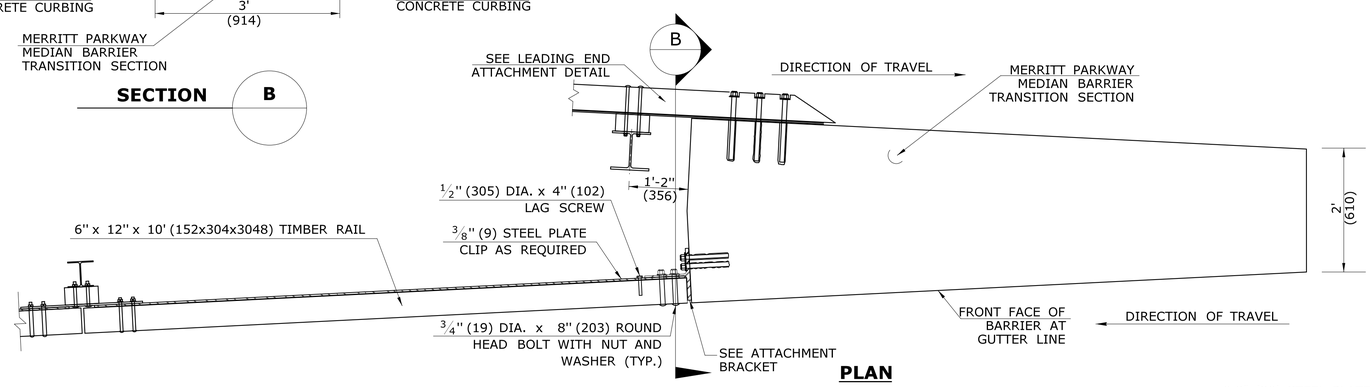

PLAN

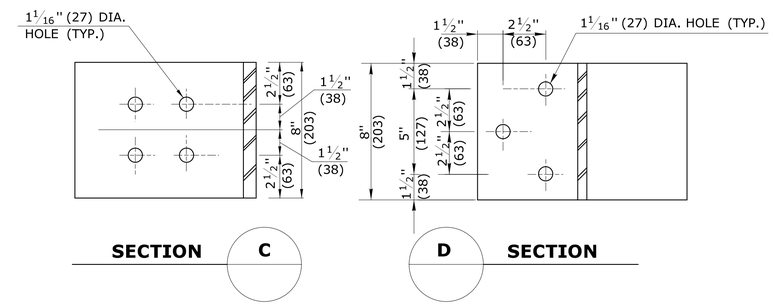

STRAIGHT ATTACHMENT BRACKET

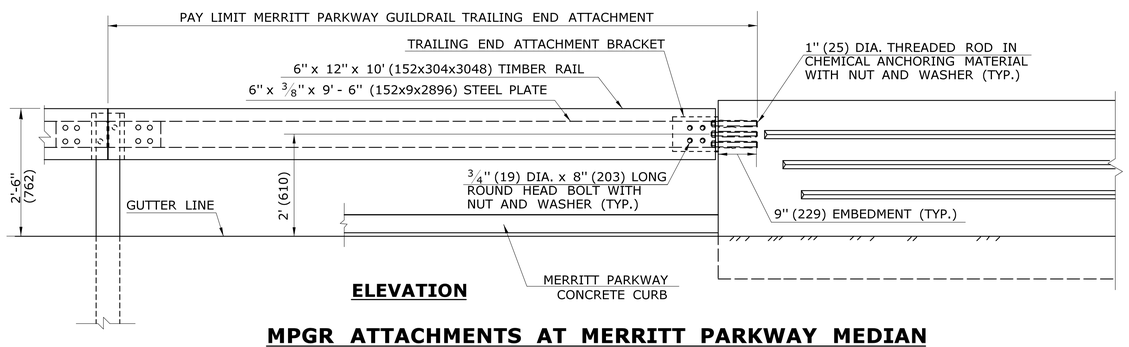

ELEVATION

MPGR ATTACHMENTS AT MERRITT PARKWAY MEDIAN BARRIER CONCRETE TRANSITION SECTION

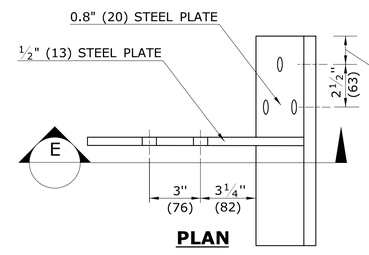

PLAN

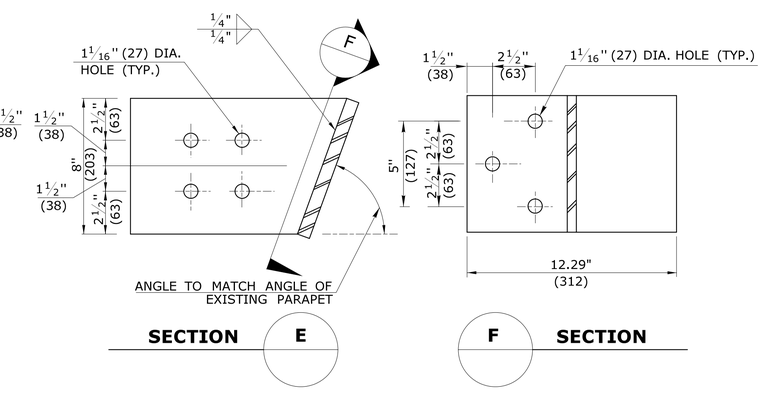

ANGLED ATTACHMENT BRACKET FOR TRAILING END ATTACHMENT

ALL METRIC DIMENSIONS ARE IN MILLIMETERS (mm) UNLESS OTHERWISE NOTED.

REV.	DATE	REVISION DESCRIPTION	
1	6/11	REVISE DETAILS TO IMPROVE CLARITY	-
2	7/13	ADD MEDIAN BARRIER TRANSITION SECTION	-
-	-	-	-
-	-	-	-
-	-	-	-
-	-	-	-

THE INFORMATION, INCLUDING ESTIMATED QUANTITIES OF WORK, SHOWN ON THESE SHEETS IS BASED ON LIMITED INVESTIGATIONS BY THE STATE AND IS IN NO WAY WARRANTED TO INDICATE THE CONDITIONS OF ACTUAL QUANTITIES OF WORK WHICH WILL BE REQUIRED.

Plotted Date: 6/21/2013

NOT TO SCALE

STATE OF CONNECTICUT
DEPARTMENT OF TRANSPORTATION

Filename: CTDOT_HIGHWAY_STD2013.dgn Model: 57 - HW-910_12c

SUBMITTED BY: NAME/DATE/TIME:

APPROVED BY: NAME/DATE/TIME:

CTDOT STANDARD SHEET

OFFICE OF ENGINEERING

STANDARD SHEET TITLE:

MERRITT PARKWAY GUIDERAIL TRAILING END ATTACHMENTS

STANDARD SHEET NO.: HW-910_12c

DELINEATORS SHALL BE PLASTIC INVERTED T-SECTIONS IN ACCORDANCE WITH DETAIL "A". REFLECTORS SHALL BE SPACED IN ACCORDANCE WITH TABLE 1, AND POSITIONED PERPENDICULAR TO ADJACENT EDGE OF LANE. DO NOT ATTACH REFLECTORS ON FLARE OR TERMINAL SECTIONS. REFLECTIVE SHEETING SHALL BE SILVER-WHITE ON ALL RAIL SECTIONS ADJACENT TO THE RIGHT SHOULDER, AND YELLOW ON RAIL SECTIONS ADJACENT TO LEFT SHOULDER OF TRAVEL LANES.

TABLE 1

DELINEATOR SPACING	
CURVE RADIUS	SPACE
< 300' (91.4m)	20' (6.10m)
≥ 300' (91.4m)	50' (15.2m)

GENERAL NOTES:

1. SEE HW-910_12a THRU 12c FOR STANDARD GUIDERAIL PARTS.
2. IF RAIL IS PLACED GREATER THAN 2' (610) FROM EDGE OF ROAD, RAIL HEIGHT IS MEASURED FROM GROUND BENEATH RAIL.
3. IF RAIL IS PLACED GREATER THAN 2'(610) FROM EDGE OF ROAD, RAIL HEIGHT IS MEASURED FROM GROUND BENEATH RAIL.

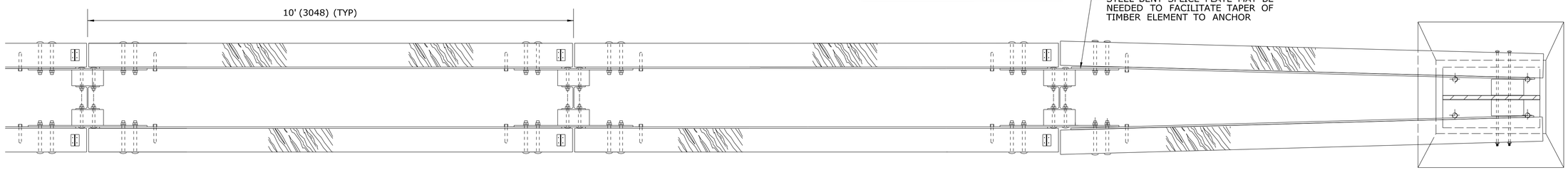

PLAN

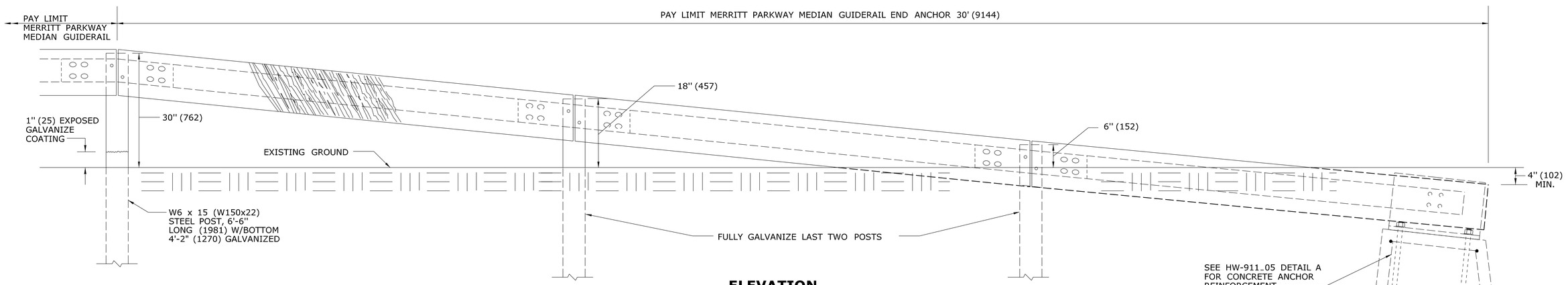

ELEVATION

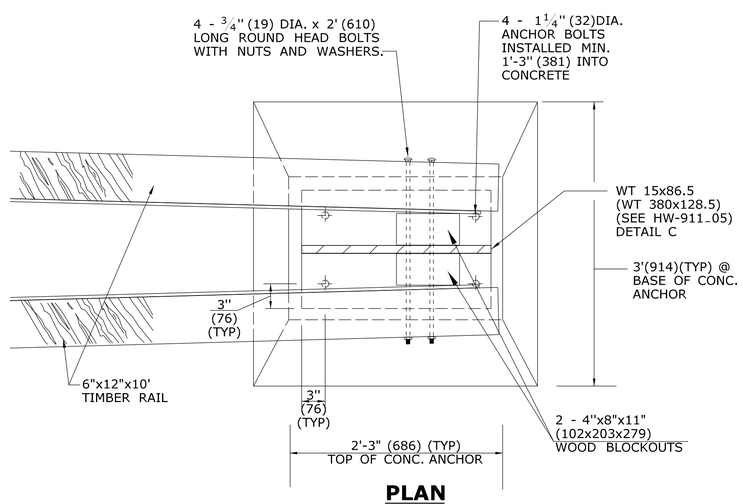

PLAN
MERRITT PARKWAY MEDIAN GUIDERAIL END ANCHOR DETAIL A

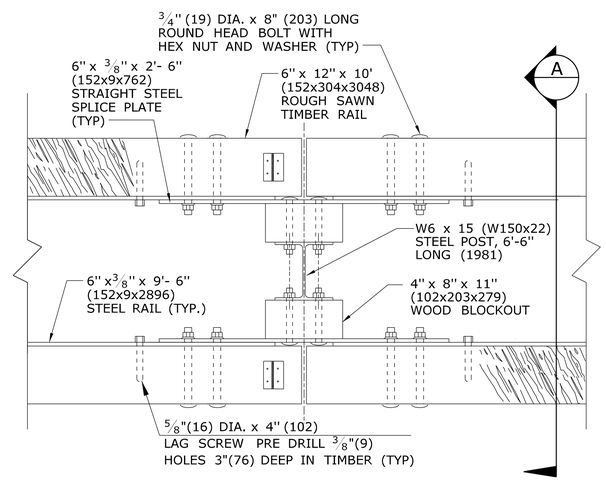

PLAN
MERRITT PARKWAY MEDIAN GUIDERAIL

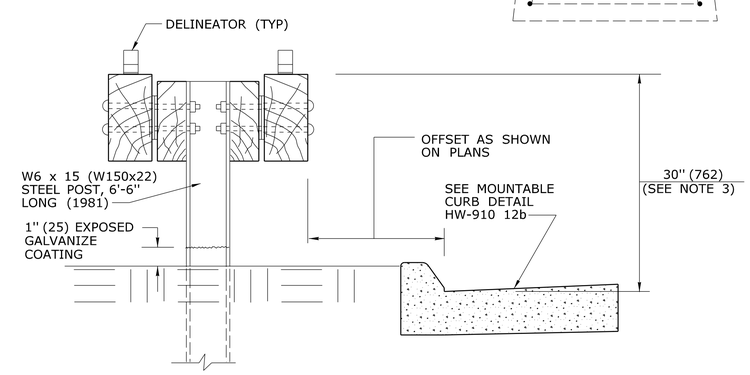

SECTION A / -

ALL METRIC DIMENSIONS ARE IN MILLIMETERS (mm) UNLESS OTHERWISE NOTED

REV.	DATE	REVISION DESCRIPTION
-	6/11	ADDED NEW SHEET FOR MEDIAN RAIL -
-	-	-
-	-	-
-	-	-
-	-	-
-	-	-

THE INFORMATION, INCLUDING ESTIMATED QUANTITIES OF WORK, SHOWN ON THESE SHEETS IS BASED ON LIMITED INVESTIGATIONS BY THE STATE AND IS IN NO WAY WARRANTED TO INDICATE THE CONDITIONS OF ACTUAL QUANTITIES OF WORK WHICH WILL BE REQUIRED.

Plotted Date: 5/13/2011

NOT TO SCALE

STATE OF CONNECTICUT
DEPARTMENT OF TRANSPORTATION

Filename: CTDOT_HIGHWAY_STD_JUNE2011.dgn Model: 50 - HW-910_12d

SUBMITTED BY: NAME/DATE/TIME:

APPROVED BY: NAME/DATE/TIME:

CTDOT STANDARD SHEET

OFFICE OF ENGINEERING

STANDARD SHEET TITLE:

MERRITT PARKWAY MEDIAN GUIDERAIL AND END ANCHOR

STANDARD SHEET NO.:

HW-910_12d

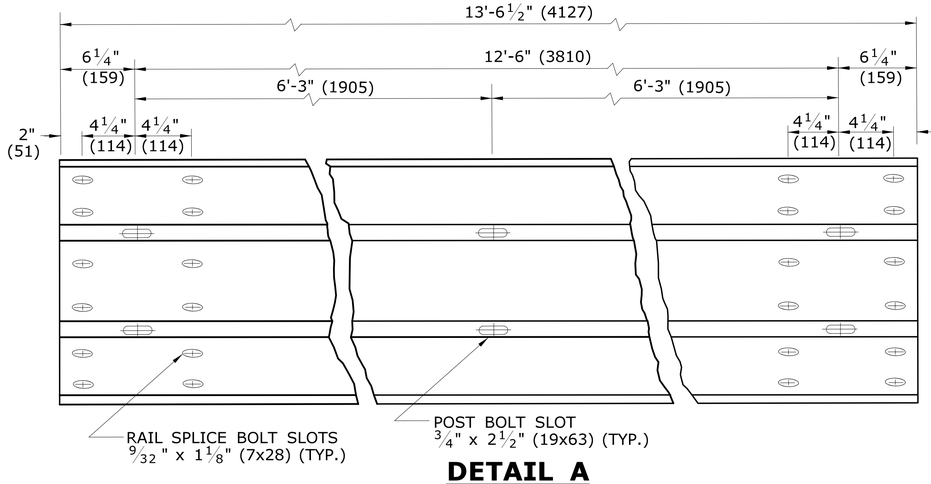

DETAIL A
THRIE-BEAM RAIL ELEMENT
(10 GAUGE)

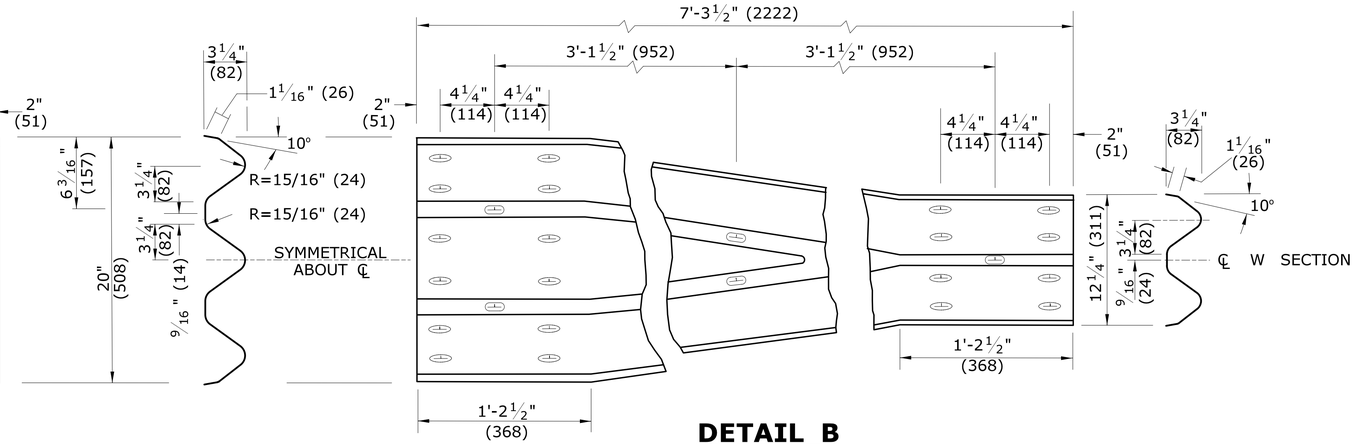

DETAIL B
THRIE-BEAM RAIL ELEMENT
(10 GAUGE)

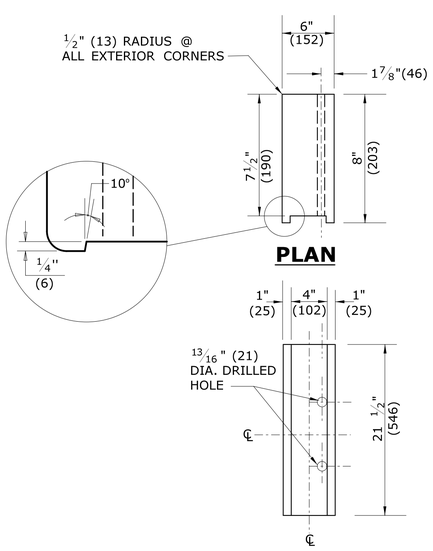

PLAN

ELEVATION
DETAIL C
THRIE-BEAM
POLYETHYENE BLOCKOUT

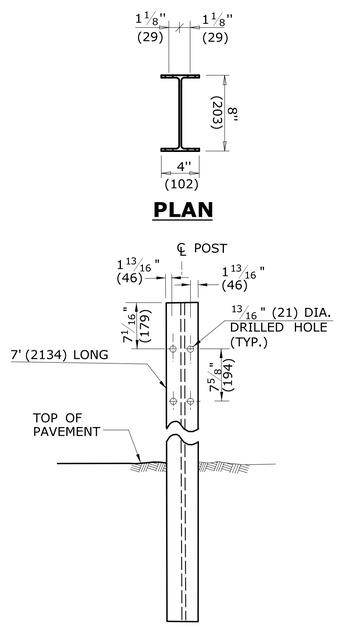

PLAN

ELEVATION
DETAIL D
THRIE-BEAM POST DETAIL
W8x13 (W200x19)
BOLT HOLE LOCATION

DELINEATOR NOTES:

1. DELINEATORS SHALL BE FORMED OF .080 POLY-CARBONATE OR .080 SHEET ALUMINUM IN ACCORDANCE WITH M.18.13.
2. REFLECTIVE SHEETING SHALL CONFORM TO M.18.09.2.
3. DELINEATORS SHALL BE INSTALLED ON THE POST CLOSEST TO THE DESIGNATED SPACING.
4. REFLECTIVE SHEETING SHALL BE WHITE EXCEPT ON THE LEFT SIDE OF DIVIDED STREETS, HIGHWAYS, RAMPS, AND ONE WAY ROADS IN THE DIRECTION OF TRAVEL WHERE IT SHALL BE YELLOW.
5. INSTALL DELINEATORS ON RAIL THAT IS PARALLEL TO AND NOT GREATER THAN 6'(1829) FROM THE EDGE OF THE ROADWAY. A MINIMUM OF THREE DELINEATORS MUST BE INSTALLED ON ANY RUN OF RAIL.

DELINEATOR SPACING:
RADIUS ≥ 300'(91440) - SPACE EVERY 50'(15.24m)
RADIUS < 300'(91440) - SPACE EVERY 25'(7.62m)

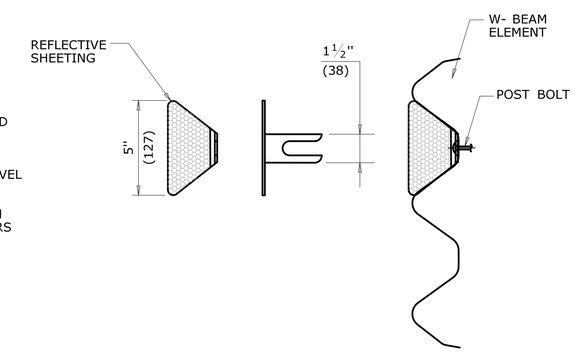

DELINEATOR DETAIL

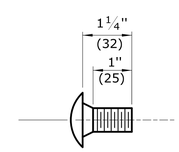

SPLICE BOLT DETAIL

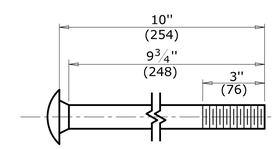

POST BOLT DETAIL

(UNTHREADED PORTION NOT TO EXCEED 6¾"(171))

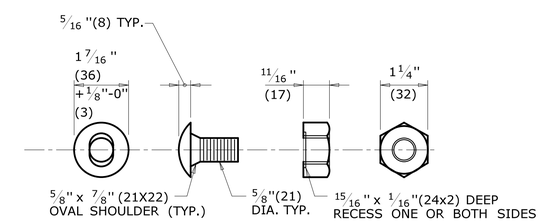

BUTTONHEAD BOLT

HEX NUT

NOTE: AFTER GALVANIZING, THE NUT SHALL BE FREE RUNNING ON THE BOLT. DIAMETER SHOWN IS TYPICAL FOR ALL GUIDERAIL BOLTS. SEE DETAILS ABOVE FOR SPECIFIC LENGTHS.

ALL METRIC DIMENSIONS ARE IN MILLIMETERS (mm) UNLESS OTHERWISE NOTED.

REV.	DATE	REVISION DESCRIPTION	
1	6/11	CREATED THRIE BEAM HARDWARE SHEET	-
2	7/13	DIMENSION REVISED	-
-	-	-	-
-	-	-	-
-	-	-	-
-	-	-	-

THE INFORMATION, INCLUDING ESTIMATED QUANTITIES OF WORK, SHOWN ON THESE SHEETS IS BASED ON LIMITED INVESTIGATIONS BY THE STATE AND IS IN NO WAY WARRANTED TO INDICATE THE CONDITIONS OF ACTUAL QUANTITIES OF WORK WHICH WILL BE REQUIRED.

Plotted Date: 3/21/2013

NOT TO SCALE

STATE OF CONNECTICUT
DEPARTMENT OF TRANSPORTATION

Filename: June2013.dgn Model: HW-910_13a

SUBMITTED BY: NAME/DATE/TIME:

APPROVED BY: NAME/DATE/TIME:

CTDOT STANDARD SHEET

OFFICE OF ENGINEERING

STANDARD SHEET TITLE:

THRIE BEAM METAL BEAM RAIL HARDWARE

STANDARD SHEET NO.:

HW-910_13a

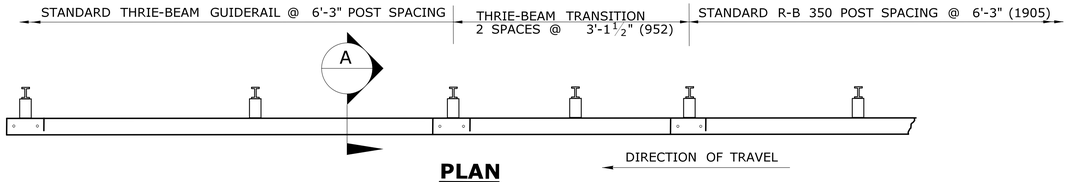

PLAN

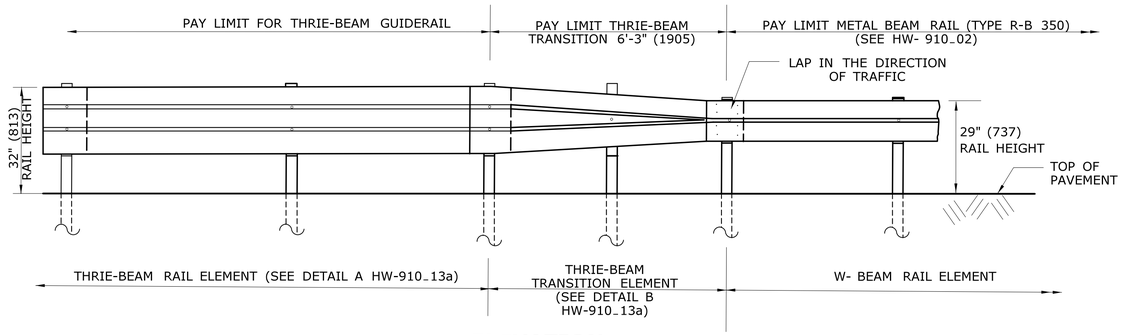

ELEVATION

THRIE-BEAM GUIDERAIL TRANSITION TO W-BEAM GUIDERAIL

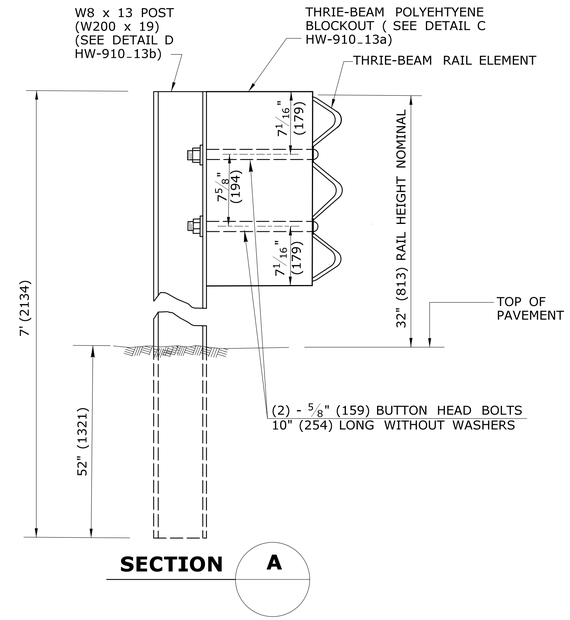

SECTION A

GENERAL NOTES:

1. THRIE-BEAM RAIL ELEMENTS AND THRIE-BEAM TRANSITION ELEMENTS SHALL BE 10 GAUGE.
2. MATERIAL FOR "M.B.R. TYPE R-B 350" SHALL CONFORM TO THE SPECIFICATIONS FOR "M.B.R. TYPE R-B 350" AND AS NOTED ON THE PLANS.
3. MATERIAL FOR "THRIE-BEAM TRANSITION" SHALL CONFORM TO THE SPECIFICATIONS FOR "THRIE-BEAM TRANSITION" AND AS NOTED ON THE PLANS.
4. MINIMUM RAIL HEIGHT OF R-B 350 GUIDERAIL FOR NEW CONSTRUCTION SHALL BE 29" (237) + 1" (25).
5. SEE HW-910_01 FOR W-BEAM METAL BEAM HARDWARE.

W8x13 (W200x19) THRIE-BEAM POST CONNECTION DETAIL

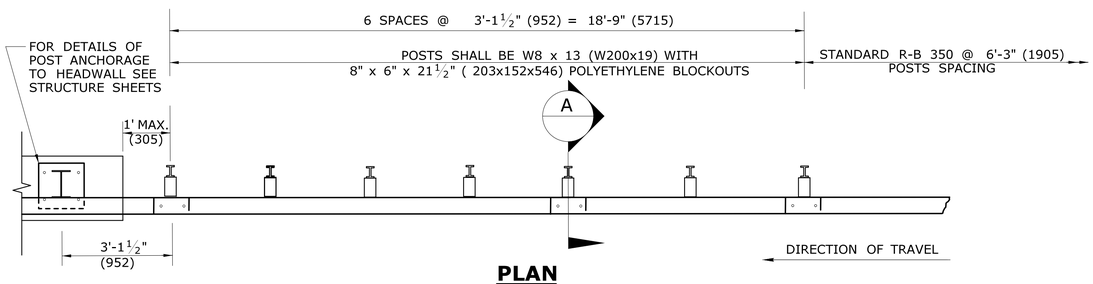

PLAN

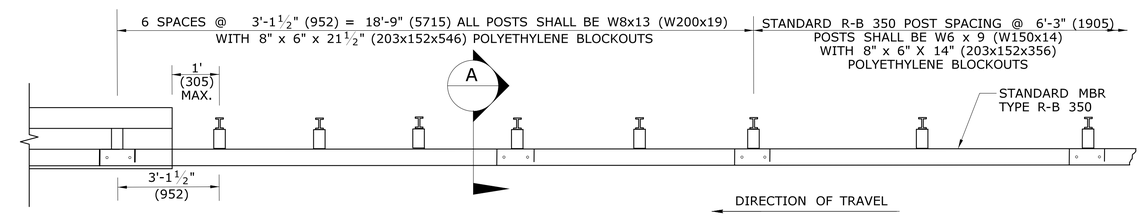

PLAN

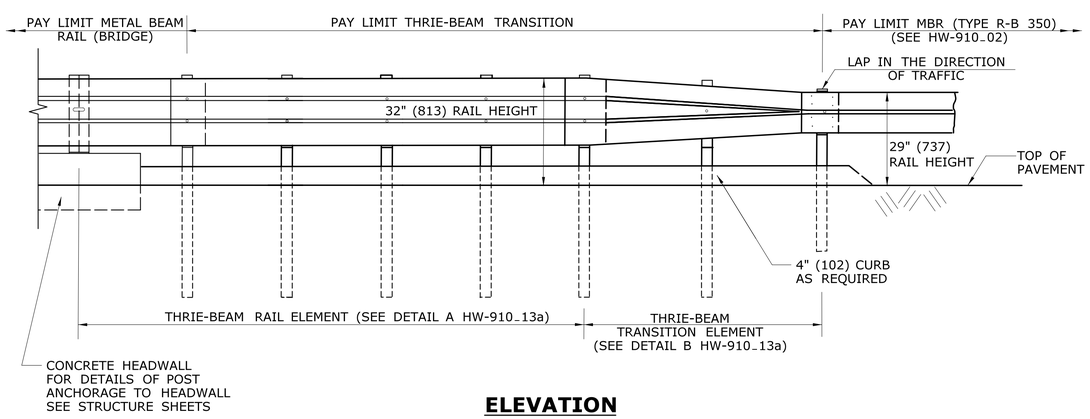

ELEVATION

R-B 350 TRANSITION TO THRIE-BEAM PEDESTAL POST MOUNTED TO HEADWALL

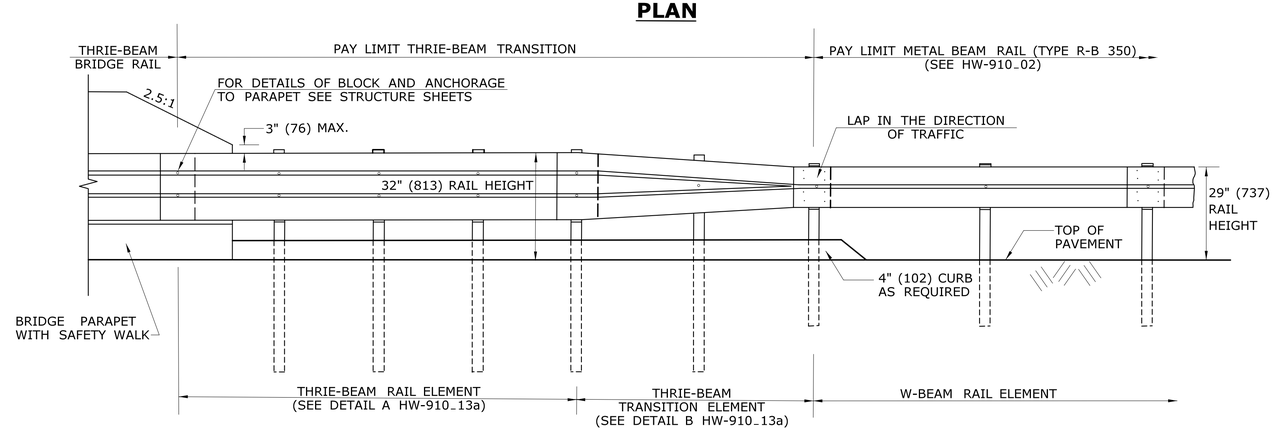

ELEVATION

THRIE-BEAM TRANSITION TO BRIDGE PARAPET WITH SAFETY WALK

ALL METRIC DIMENSIONS ARE IN MILLIMETERS (mm) UNLESS OTHERWISE NOTED.

REV.	DATE	REVISION DESCRIPTION	
1	6/11	CREATED TRANSITION SHEET	-
2	7/13	DIMENSION REVISED	-
-	-	-	-
-	-	-	-
-	-	-	-
-	-	-	-

THE INFORMATION, INCLUDING ESTIMATED QUANTITIES OF WORK, SHOWN ON THESE SHEETS IS BASED ON LIMITED INVESTIGATIONS BY THE STATE AND IS IN NO WAY WARRANTED TO INDICATE THE CONDITIONS OF ACTUAL QUANTITIES OF WORK WHICH WILL BE REQUIRED.

Plotted Date: 3/21/2013

NOT TO SCALE

STATE OF CONNECTICUT
DEPARTMENT OF TRANSPORTATION

Filename: June2013.dgn Model: HW-910_13b

SUBMITTED BY: NAME/DATE/TIME:

APPROVED BY: NAME/DATE/TIME:

CTDOT STANDARD SHEET

OFFICE OF ENGINEERING

STANDARD SHEET TITLE:

THRIE-BEAM TRANSITIONS

STANDARD SHEET NO.:

HW-910_13b

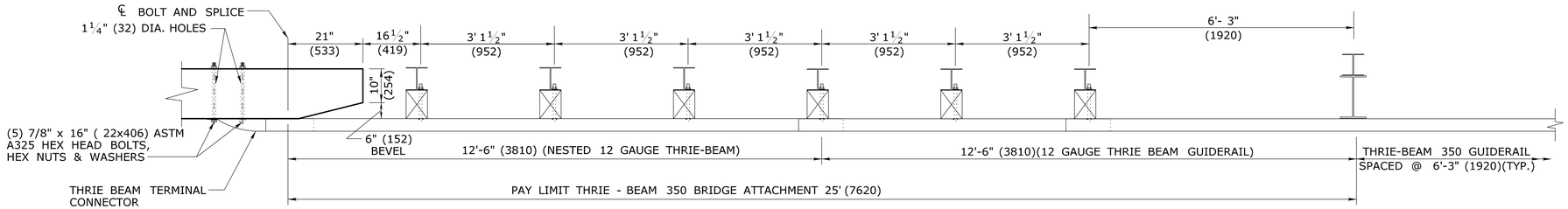

PLAN VIEW

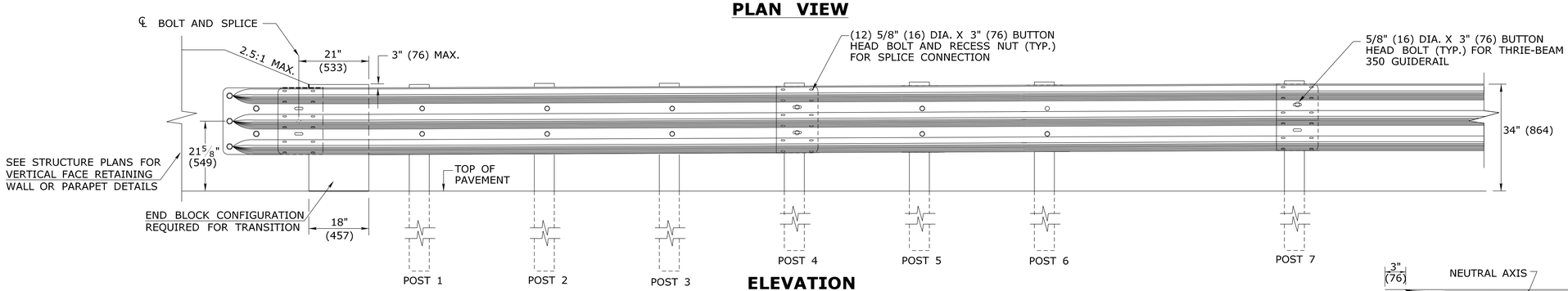

ELEVATION

GENERAL NOTES:

FOR SINGLE DIRECTION ROADWAY:

- INSTALL THRIE - BEAM TERMINAL CONNECTOR BETWEEN NESTED GUIDERAIL ELEMENTS.

FOR DUAL DIRECTION ROADWAY:

FOR APPROACHING TRAFFIC

- INSTALL THRIE-BEAM TERMINAL CONNECTOR BETWEEN NESTED GUIDERAIL ELEMENTS.

FOR TRAILING END:

- INSTALL THRIE-BEAM TERMINAL CONNECTOR OUTSIDE OF THE NESTED GUIDERAIL ELEMENTS.

LEGEND

1. W6 x 25 x 8.5' OR W8 x 21 x 8.5' POST (W150x37x259) OR (W200x31x259) POST
2. W6 x 20 x 7' OR W8 x 18 x 7' POST (W150x30x2134) OR (W200x27x2134)
3. 6" x 8" x 18" TREATED TIMBER OFFSET BLOCK (152x203x457) (OR APPROVED EQUAL)
4. W14x 22 STEEL OFFSET BLOCK (W360x33)
5. W6 x 9 x 7' POST (W152x230x2134)

DELINEATOR NOTES:

1. DELINEATORS SHALL BE FORMED OF .080 POLY-CARBONATE OR .080 SHEET ALUMINUM IN ACCORDANCE WITH M.18.13.
2. REFLECTIVE SHEETING SHALL CONFORM TO M.18.09.2.
3. DELINEATORS SHALL BE INSTALLED ON THE POST CLOSEST TO THE DESIGNATED SPACING.
4. REFLECTIVE SHEETING SHALL BE WHITE EXCEPT ON THE LEFT SIDE OF DIVIDED STREETS, HIGHWAYS, RAMPS, AND ONE WAY ROADS IN THE DIRECTION OF TRAVEL WHERE IT SHALL BE YELLOW.
5. INSTALL DELINEATORS ON RAIL THAT IS PARALLEL TO AND NOT GREATER THAN 6'(1829) FROM THE EDGE OF THE ROADWAY. A MINIMUM OF THREE DELINEATORS MUST BE INSTALLED ON ANY RUN OF RAIL.

DELINEATOR SPACING:
RADIUS ≥ 300'(91440) - SPACE EVERY 50'(15.24m)
RADIUS < 300'(91440) - SPACE EVERY 25'(7.62m)

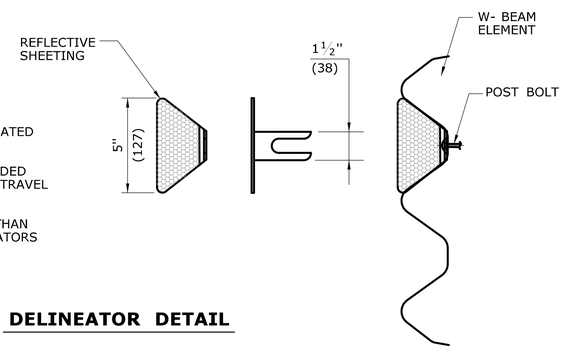

DELINEATOR DETAIL

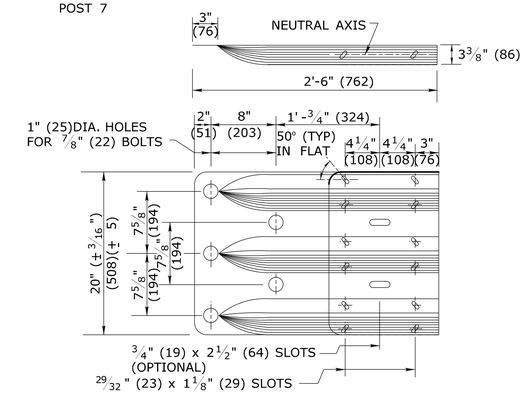

THRIE-BEAM TERMINAL CONNECTOR

(10 GAUGE)

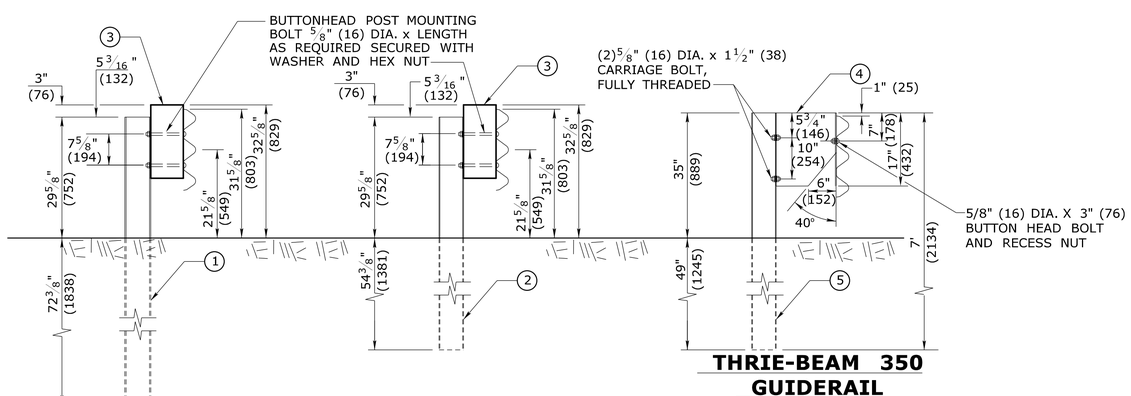

POST 1, 2 & 3

POST 4,5, & 6

THRIE-BEAM 350 GUIDERAIL

POST 7

(SEE SHEET HW-910_14b)

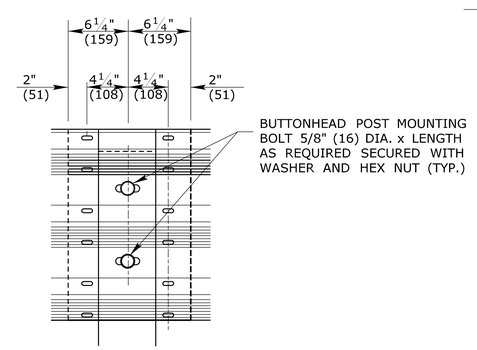

SPLICE DIAGRAM @ POST 4

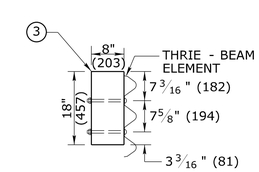

TREATED TIMBER BLOCK OUT DETAIL

POSTS 1 THRU 6

(OR APPROVED EQUAL)

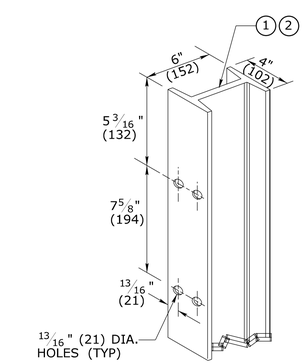

BOLT HOLE LOCATION FOR STEEL POST

POSTS 1 THRU 6

ALL METRIC DIMENSIONS ARE IN MILLIMETERS (mm) UNLESS OTHERWISE NOTED.

REV.	DATE	REVISION DESCRIPTION
1	6/11	REVISE AND ADD DIMENSIONS TO TERMINAL CONNECTOR
-	-	AND REVISE BLOCKOUT DESIGNATION -
-	-	- -
-	-	- -
-	-	- -
-	-	- -

THE INFORMATION, INCLUDING ESTIMATED QUANTITIES OF WORK, SHOWN ON THESE SHEETS IS BASED ON LIMITED INVESTIGATIONS BY THE STATE AND IS IN NO WAY WARRANTED TO INDICATE THE CONDITIONS OF ACTUAL QUANTITIES OF WORK WHICH WILL BE REQUIRED.

Plotted Date: 6/1/2011

NOT TO SCALE

STATE OF CONNECTICUT
DEPARTMENT OF TRANSPORTATION

Filename: CTDOT_HIGHWAY_STD_JUNE2011.dgn Model: 54 - HW-910_14a

SUBMITTED BY: NAME/DATE/TIME:

APPROVED BY: NAME/DATE/TIME:

CTDOT STANDARD SHEET

OFFICE OF ENGINEERING

STANDARD SHEET TITLE:

THRIE-BEAM 350 BRIDGE ATTACHMENT

STANDARD SHEET NO.:

HW-910_14a

GENERAL NOTES:

1. MINIMUM RAIL HEIGHT OF R-B 350 GUIDERAIL FOR NEW CONSTRUCTION SHALL BE 29" (237) ± 1" (25).

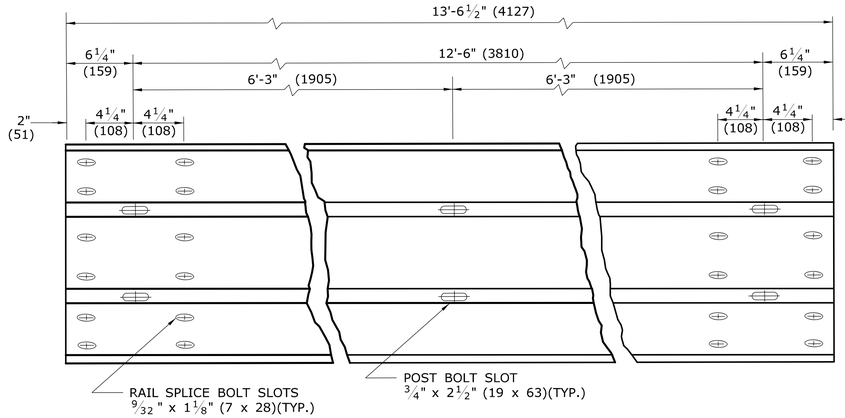

TYPICAL THRIE-BEAM RAIL ELEMENT (12 GAUGE)

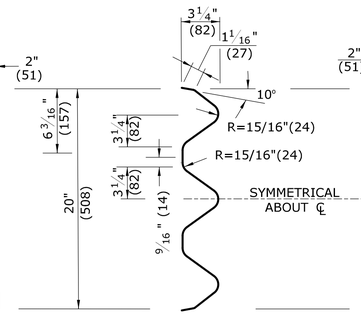

END VIEW OF TRANSITION

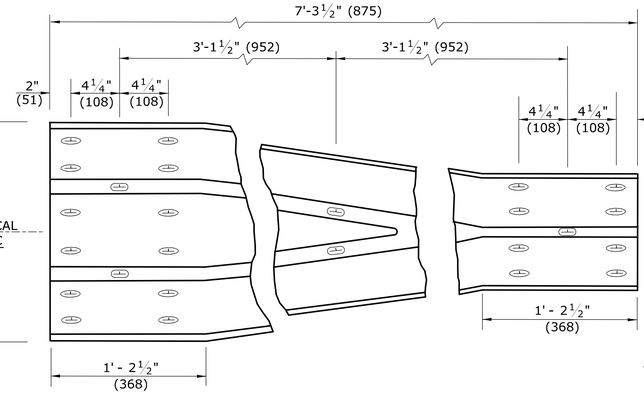

TYPICAL THRIE-BEAM TRANSITION ELEMENT (12 GAUGE)

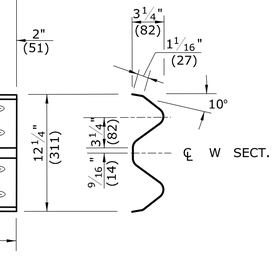

END VIEW OF TRANSITION

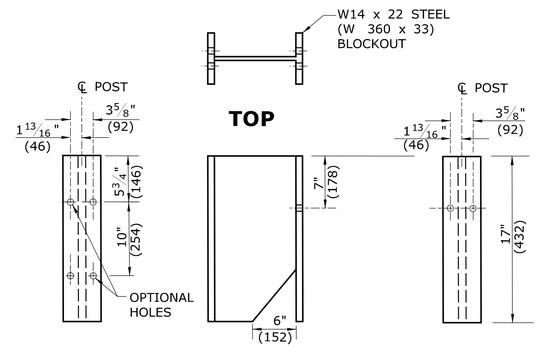

POST FACE **SIDE** **TRAFFIC FACE**

THRIE-BEAM 350 BLOCKOUT DETAIL

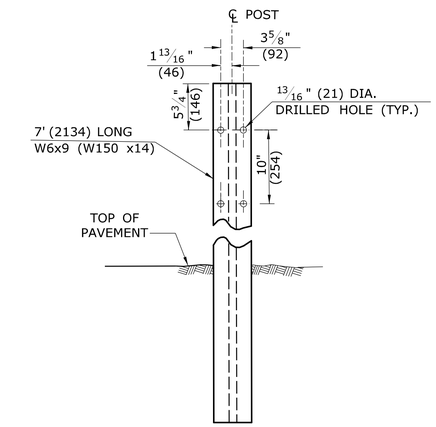

THRIE-BEAM 350 W6x9 (W150x14) FRONT POST ELEVATION

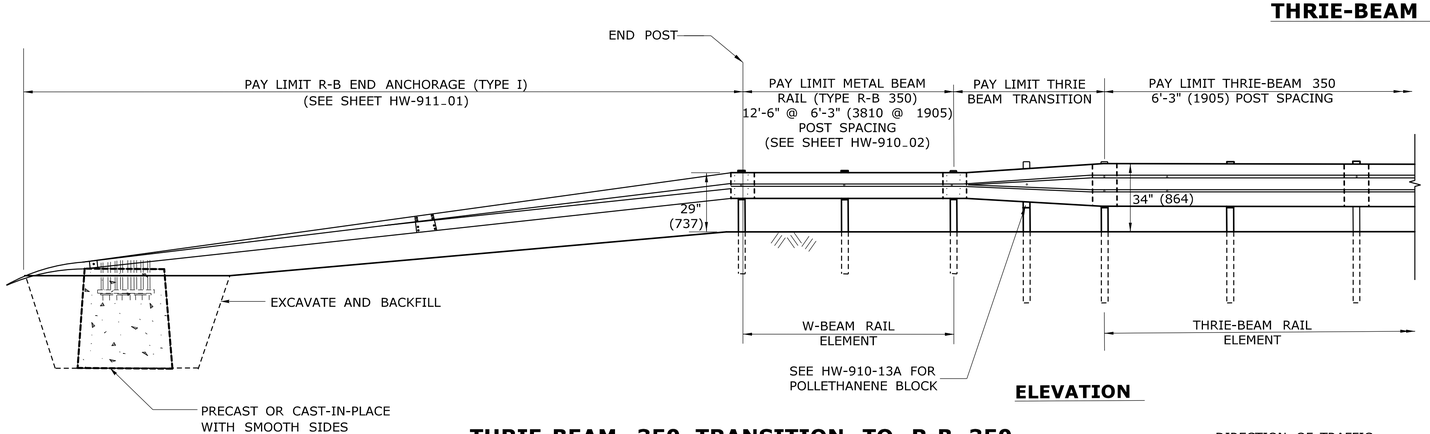

ELEVATION

THRIE-BEAM 350 TRANSITION TO R-B 350 AND R-B END ANCHORAGE TYPE I

DIRECTION OF TRAFFIC

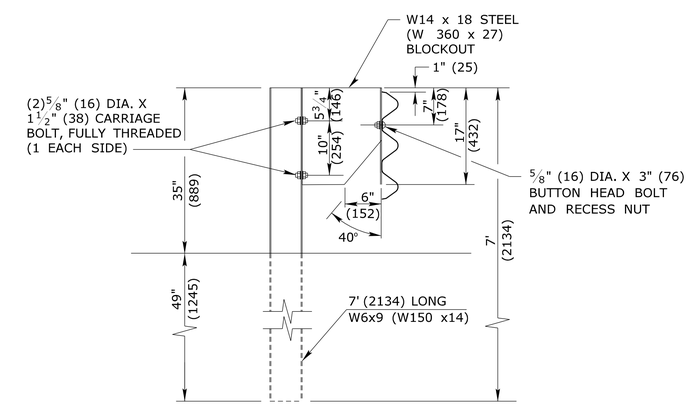

THRIE-BEAM 350 GUIDERAIL

ALL METRIC DIMENSIONS ARE IN MILLIMETERS (mm) UNLESS OTHERWISE NOTED.

REV.	DATE	REVISION DESCRIPTION	
1	6/11	REVISE BLOCKOUT DESIGNATION	-
-	-		-
-	-	-	-
-	-	-	-
-	-	-	-
-	-	-	-

THE INFORMATION, INCLUDING ESTIMATED QUANTITIES OF WORK, SHOWN ON THESE SHEETS IS BASED ON LIMITED INVESTIGATIONS BY THE STATE AND IS IN NO WAY WARRANTED TO INDICATE THE CONDITIONS OF ACTUAL QUANTITIES OF WORK WHICH WILL BE REQUIRED.

Plotted Date: 6/1/2011

NOT TO SCALE

STATE OF CONNECTICUT
DEPARTMENT OF TRANSPORTATION

Filename: CTDOT_HIGHWAY_STD_JUNE2011.dgn Model: 55- HW-910_14b

SUBMITTED BY: NAME/DATE/TIME:

APPROVED BY: NAME/DATE/TIME:

CTDOT STANDARD SHEET

OFFICE OF ENGINEERING

STANDARD SHEET TITLE:

THRIE-BEAM 350 GUIDERAIL TRANSITION TO R-B 350 GUIDERAIL

STANDARD SHEET NO.:

HW-910_14b

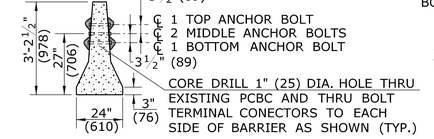

SECTION A1

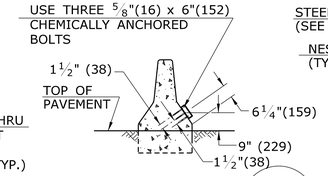

SECTION A
(W-BEAM OMITTED)

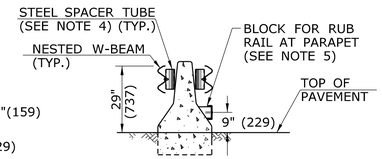

SECTION B

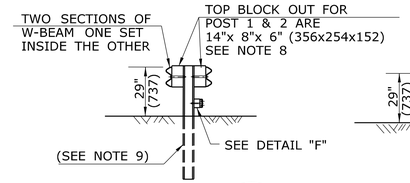

SECTION C

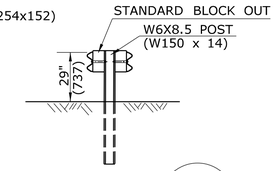

SECTION D

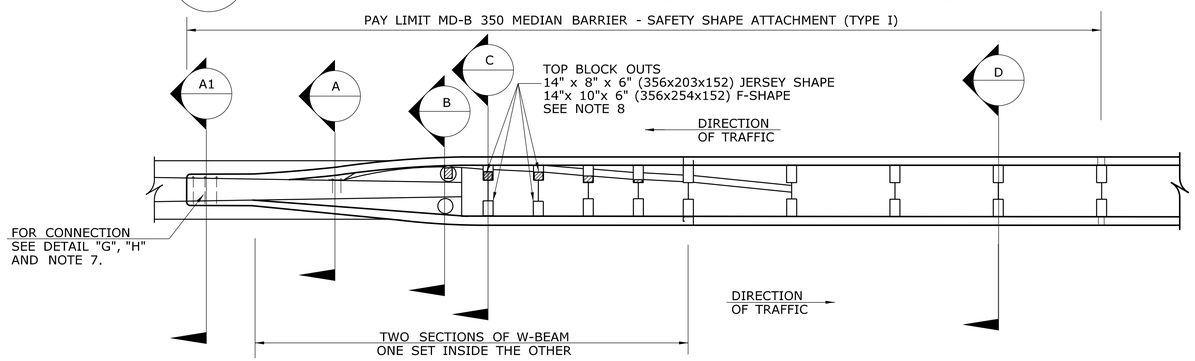

PLAN

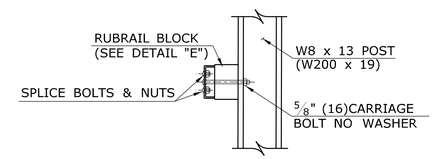

DETAIL "F"
RUBRAIL LAP AT POST 1

GENERAL NOTES:

1. THIS MD-B 350 MEDIAN BARRIER - SAFETY SHAPE ATTACHMENT IS APPROPRIATE FOR CONNECTION AT THE FOLLOWING LOCATION:
   a) JERSEY SHAPED OR F-SHAPED BARRIER WITH NO ELECTRICAL JUNCTION BOX WITHIN THE LIMITS OF THE ATTACHMENT (APPROXIMATELY 8' (2438)).SEE NOTE 8.
2. POSTS 1-5 REQUIRE AN ADDITIONAL HOLE TO ATTACH LOWER BLOCKS AND/OR RUBRAIL.
3. RUBRAIL BLOCKS LOCATED ON POSTS 1-4 ARE OFFSET, DRILLED AND SECURED WITH 5/8" (16) CARRIAGE BOLTS (SEE CHART FOR BOLT LENGTHS). SECURE BLOCKS ONLY TO POSTS 2 AND 4. SECURE RUBRAIL WITH 5/8" (16) x 4 1/2" (114) LONG BUTTON HEAD BOLT. FLARE RUBRAIL TO THE WEB OF POST 6.
4. STEEL SPACER TUBE IS A SCHEDULE 40 GALVANIZED PIPE 6" (152) INSIDE DIAMETER x 9" (229) LONG. ATTACH TUBE TO RAIL ELEMENT ONLY WITH A 5/8" (16) x 1 1/4" (32) LONG BUTTON HEAD BOLT AND RECTANGULAR PLATE WASHER. TUBE IS NOT ATTACHED TO BARRIER.
5. SEE DETAIL "C" FOR SLOPED RUBRAIL BLOCK AT BARRIER. BLOCK IS ATTACHED TO RAIL ELEMENT ONLY. USE A 3/8" (10) x 3" (76) LAG BOLT WITH FLAT WASHER.
6. SHOP FABRICATE THE C6x8.2 (C150x12) RUBRAIL END TO BE CONSISTENT WITH THE SLOPE OF THE SAFETY SHAPE AND ATTACH FLUSH WITH SLOPED TOE OF THE BARRIER. RUBRAIL SHALL BE ANCHORED USING THREE 5/8" (16) x 6" (152) CHEMICALLY ANCHORED BOLTS. RUBRAIL MUST BE TWISTED 35° BETWEEN SECTION A AND B. RIGHT AND LEFT HAND TWISTS WILL BE REQUIRED.
7. THE W-BEAM TERMINAL CONNECTOR SHALL BE ANCHORED USING FOUR (4) 7/8" (22) DIA. ANCHOR BOLTS AND BEVELED WASHERS. MAXIMUM PROJECTION OF BOLTS SHALL BE 1/2" (13).
8. THIS DETAIL AS SHOWN, IS FOR ATTACHMENT TO JERSEY SHAPE PCBC WITH 24" (610) BASE. WHEN ATTACHING TO AN F-SHAPE PCBC WITH 30" BASE, TOP BLOCK OUTS FOR FIRST TWO POSTS SHALL BE 14" x 10" x 6" (356x254x152).
9. POSTS 1 & 2 ARE W8 x 13 (W200 x 19). ALL OTHERS ARE W6 x 8.5 (W150 x 14).
10. FOR SINGLE DIRECTION ROADWAY:
    INSTALL W-BEAM TERMINAL CONNECTOR BETWEEN NESTED GUIDERAIL ELEMENTS.
    FOR DUAL DIRECTION ROADWAY FOR APPROACHING TRAFFIC:
    INSTALL W-BEAM TERMINAL CONNECTOR BETWEEN NESTED GUIDERAIL ELEMENTS.
    FOR TRAILING END:
    INSTALL W-BEAM TERMINAL CONNECTOR OUTSIDE OF THE NESTED GUIDERAIL ELEMENTS.
11. MINIMUM RAIL HEIGHT FOR NEW CONSTRUCTION SHALL BE 29" (237) ± 1' (25).

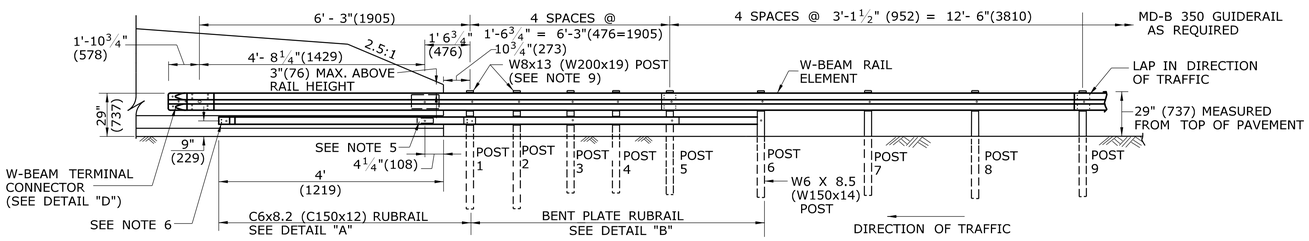

LEADING END ELEVATION
(OMIT RUBRAIL FOR TRAILING END)

RUBRAIL BLOCKS 7"(178) HIGH x 4"(102)WIDE		
POST	THICKNESS	BOLT LENGTH
1	4 1/4"(108)	9"(229)
2	3 1/4"(83)	5"(127)*
3	2"(51)	6"(152)
4	1"(25)	3"(76)*

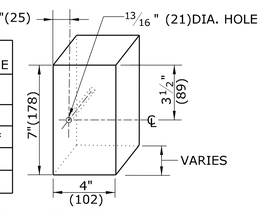

* BOLTS FOR POSTS 2 AND 4 ARE USED TO ATTACH BLOCK TO POST. RUBRAIL NOT ATTACHED TO BLOCK.

DETAIL "E"
RUBRAIL BLOCK

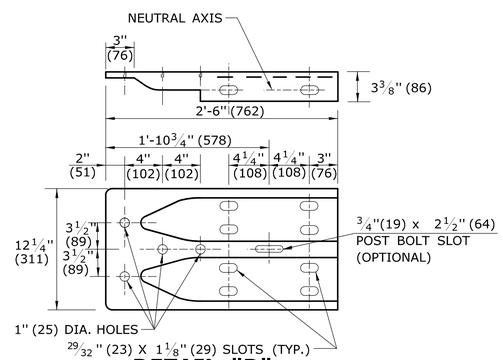

DETAIL "D"
W-BEAM TERMINAL CONNECTOR (10 GA.)
SEE NOTE 10

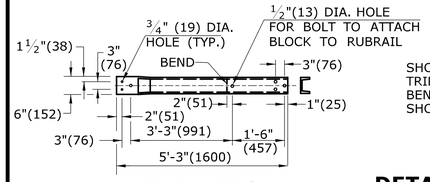

ELEVATION

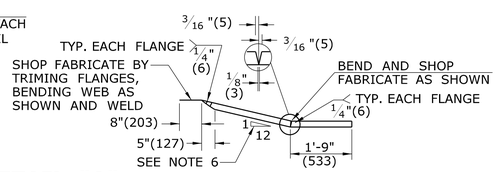

DETAIL "A" **PLAN**
C6x8.2 (150 x 12) RUBRAIL
(SEE NOTE 6)

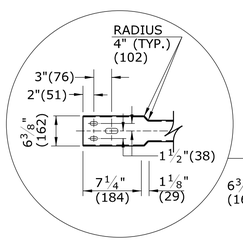

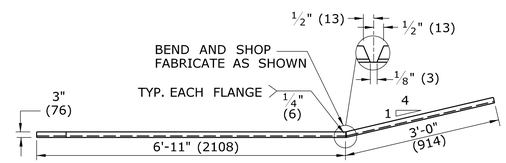

PLAN

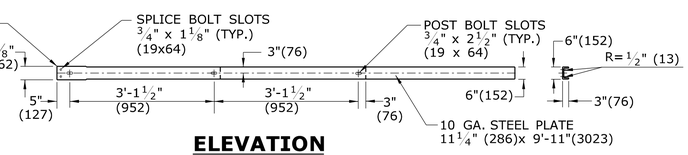

ELEVATION
DETAIL "B"
BENT PLATE RUBRAIL

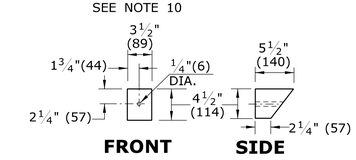

DETAIL "C"
SLOPED BLOCK FOR C6x8.2 (C150X12) RUBRAIL AT PARAPET

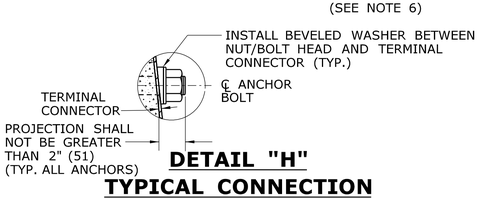

DETAIL "H"
TYPICAL CONNECTION

ANCHOR BOLT	DIMENSION "A"
TOP	11 1/2" (292)
MIDDLE	1'-1 1/4"(311)
BOTTOM	1'- 1"(330)

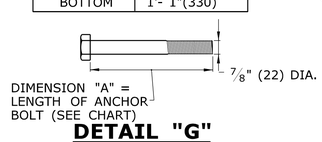

DETAIL "G"
ANCHOR BOLT

ALL METRIC DIMENSIONS ARE IN MILLIMETERS (mm) UNLESS OTHERWISE NOTED.

REV.	DATE	REVISION DESCRIPTION
1	6/11	CHANGE NAME
-	-	-
-	-	-
-	-	-
-	-	-
-	-	-

THE INFORMATION, INCLUDING ESTIMATED QUANTITIES OF WORK, SHOWN ON THESE SHEETS IS BASED ON LIMITED INVESTIGATIONS BY THE STATE AND IS IN NO WAY WARRANTED TO INDICATE THE CONDITIONS OF ACTUAL QUANTITIES OF WORK WHICH WILL BE REQUIRED.

Plotted Date: 5/10/2011

NOT TO SCALE

STATE OF CONNECTICUT
DEPARTMENT OF TRANSPORTATION

Filename: CTDOT_HIGHWAY_STD_JUNE2011.dgn Model: 56- HW-910_15

SUBMITTED BY: NAME/DATE/TIME:
APPROVED BY: NAME/DATE/TIME:

CTDOT STANDARD SHEET
OFFICE OF ENGINEERING

STANDARD SHEET TITLE:
MD-B 350 MEDIAN BARRIER SAFETY SHAPE ATTACHMENT TYPE I

STANDARD SHEET NO.:
HW-910_15

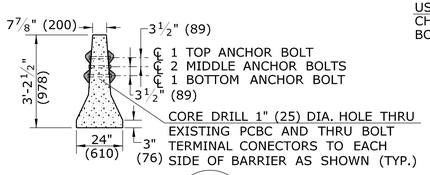

SECTION A1

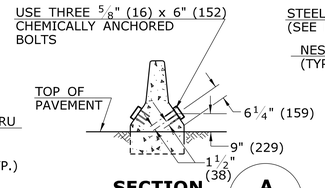

SECTION A
(W-BEAM OMITTED)

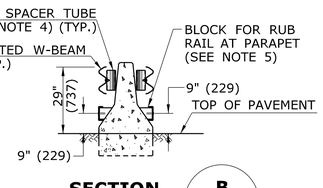

SECTION B

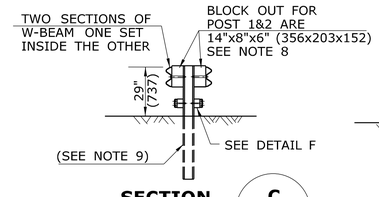

SECTION C

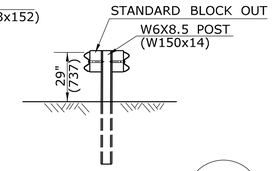

SECTION D

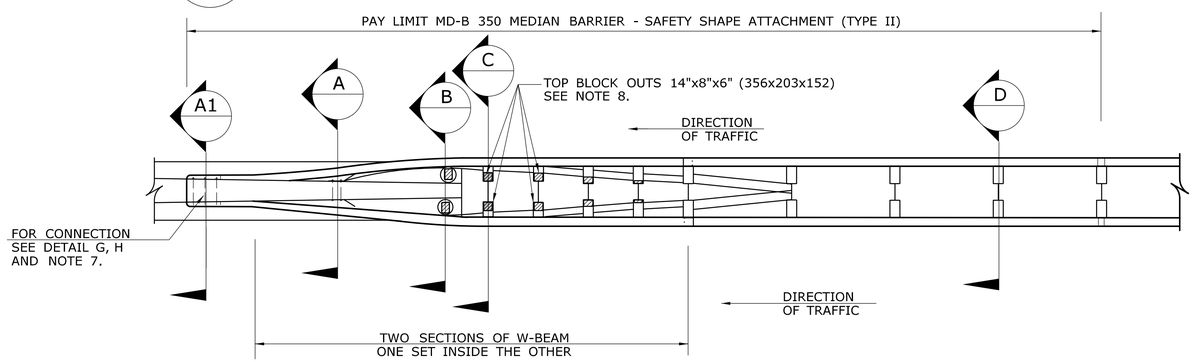

PLAN

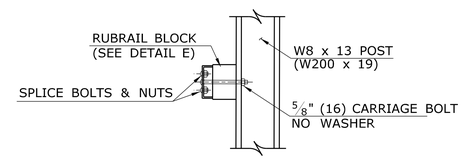

DETAIL F
RUBRAIL LAP AT POST 1

GENERAL NOTES:

1. THIS MD-B 350 MEDIAN BARRIER - SAFETY SHAPE ATTACHMENT IS APPROPRIATE FOR CONNECTION AT THE FOLLOWING LOCATION:
   a) JERSEY SHAPED OR F-SHAPED BARRIER WITH NO ELECTRICAL JUNCTION BOX WITHIN THE LIMITS OF THE ATTACHMENT (APPROXIMATELY 8'(2438)). SEE NOTE 8.
2. POSTS 1-5 REQUIRE AN ADDITIONAL HOLE TO ATTACH LOWER BLOCKS AND/OR RUBRAIL.
3. RUBRAIL BLOCKS LOCATED ON POSTS 1-4 ARE OFFSET, DRILLED AND SECURED WITH 5/8" (16) CARRIAGE BOLTS (SEE CHART FOR BOLT LENGTHS). SECURE BLOCKS ONLY TO POSTS 2 AND 4. SECURE RUBRAIL WITH 5/8" (16) x 4 1/2" (114) LONG BUTTON HEAD BOLT . FLARE RUBRAIL TO THE WEB OF POST 6.
4. STEEL SPACER TUBE IS A SCHEDULE 40 GALVANIZED PIPE 6" (152) INSIDE DIAMETER x 9" (229) LONG. ATTACH TUBE TO RAIL ELEMENT ONLY WITH A 5/8" (16) x 1 1/4" (32) LONG BUTTON HEAD BOLT AND RECTANGULAR PLATE WASHER. TUBE IS NOT ATTACHED TO BARRIER.
5. SEE DETAIL "C" FOR SLOPED RUBRAIL BLOCK AT BARRIER. BLOCK IS ATTACHED TO RAIL ELEMENT ONLY. USE A 3/8" (10) x 3" (76) LAG BOLT WITH FLAT WASHER.
6. SHOP FABRICATE THE C6x8.2 (C150x12) RUBRAIL END TO BE CONSISTENT WITH THE SLOPE OF THE SAFETY SHAPE AND ATTACH FLUSH WITH SLOPED TOE OF THE BARRIER. RUBRAIL SHALL BE ANCHORED USING THREE 5/8" (16) x 6" (152) CHEMICALLY ANCHORED BOLTS. RUBRAIL MUST BE TWISTED 35° BETWEEN SECTION A AND B. RIGHT AND LEFT HAND TWISTS WILL BE REQUIRED.
7. THE W-BEAM TERMINAL CONNECTOR SHALL BE ANCHORED USING FOUR (4) 7/8" (22) DIA. ANCHOR BOLTS AND BEVELED WASHERS. MAXIMUM PROJECTION OF BOLTS SHALL BE 1/2" (13).
8. THIS DETAIL AS SHOWN, IS FOR ATTACHMENT TO A JERSEY SHAPE PCBC WITH 24"(610) BASE. WHEN ATTACHING TO AN F-SHAPE PCBC WITH 30" BASE, TOP BLOCK OUTS FOR FIRST TWO POSTS SHALL BE 14" x 10" x 6" (356 x 254 x 152).
9. POSTS 1 & 2 ARE W8 x 13 (W200 x 19). ALL OTHERS ARE W6 x 8.5 (W150 x 14).
10. FOR SINGLE DIRECTION ROADWAY:
    INSTALL W-BEAM TERMINAL CONNECTOR BETWEEN NESTED GUIDERAIL ELEMENTS.
    FOR DUAL DIRECTION APPROACHING TRAFFIC:
    INSTALL W-BEAM TERMINAL CONNECTOR BETWEEN NESTED GUIDERAIL ELEMENTS.
    FOR TRAILING END:
    INSTALL W-BEAM TERMINAL CONNECTOR OUTSIDE OF NESTED GUIDERAIL ELEMENTS.
11. MINIMUM RAIL HEIGHT FOR NEW CONSTRUCTION SHALL BE 29" (237) ± 1" (25).

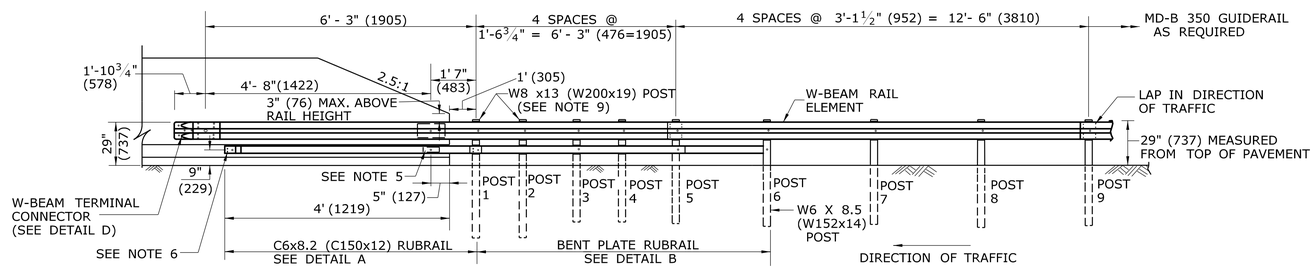

LEADING END ELEVATION
(OMIT RUBRAIL FOR TRAILING END)

RUBRAIL BLOCKS 7" (178) HIGH x 4" (102) WIDE		
POST	THICKNESS	BOLT LENGTH
1	4 1/4" (108)	9" (229)
2	3 1/4" (83)	5" (127)*
3	2" (51)	6" (152)
4	1" (25)	3" (76)*

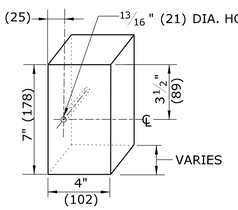

* BOLTS FOR POSTS 2 AND 4 ARE USED TO ATTACH BLOCK TO POST. RUBRAIL NOT ATTACHED TO BLOCK.

DETAIL E
RUBRAIL BLOCK

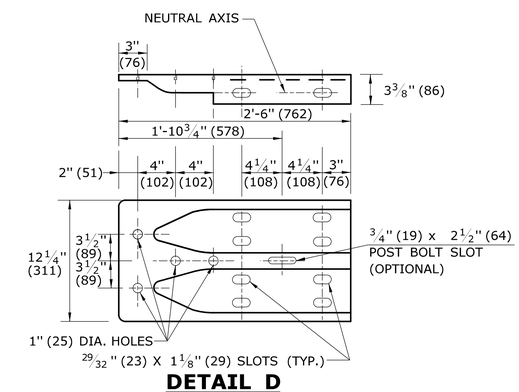

DETAIL D
W-BEAM TERMINAL CONNECTOR (10 GA.)
SEE NOTE 10

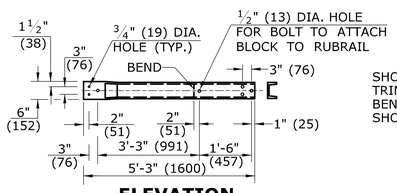

ELEVATION

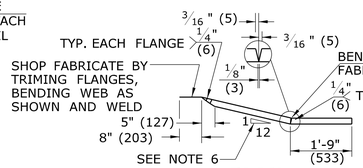

PLAN

DETAIL A
C6x8.2 (C150x12) RUBRAIL
(SEE NOTE 6)

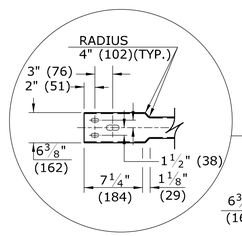

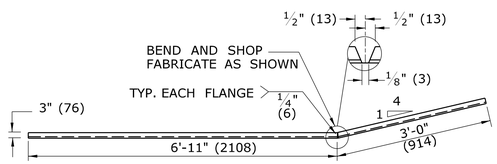

PLAN

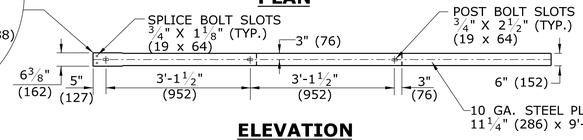

ELEVATION

DETAIL B
BENT PLATE RUBRAIL

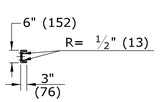

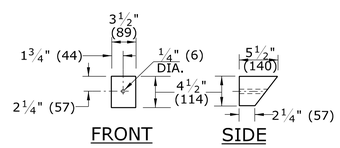

DETAIL C
SLOPED BLOCK FOR C6x8.2 (C150x12) RUBRAIL AT PARAPET

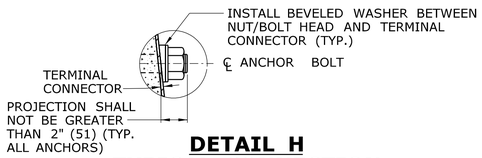

DETAIL H
TYPICAL CONNECTION

ANCHOR BOLT	DIMENSION "A"
TOP	11 1/2" (292)
MIDDLE	1'-1 1/4" (311)
BOTTOM	1'- 1" (330)

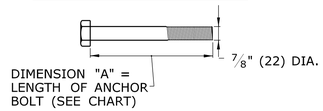

DETAIL G
ANCHOR BOLT

ALL METRIC DIMENSIONS ARE IN MILLIMETERS (mm) UNLESS OTHERWISE NOTED.

REV.	DATE	REVISION DESCRIPTION
1	6/11	CHANGE NAME -
-	-	-
-	-	-
-	-	-
-	-	-
-	-	-

THE INFORMATION, INCLUDING ESTIMATED QUANTITIES OF WORK, SHOWN ON THESE SHEETS IS BASED ON LIMITED INVESTIGATIONS BY THE STATE AND IS IN NO WAY WARRANTED TO INDICATE THE CONDITIONS OF ACTUAL QUANTITIES OF WORK WHICH WILL BE REQUIRED.

Plotted Date: 5/10/2011

NOT TO SCALE

STATE OF CONNECTICUT
DEPARTMENT OF TRANSPORTATION

Filename: CTDOT_HIGHWAY_STD_JUNE2011.dgn Model: 57- HW-910_16

SUBMITTED BY: NAME/DATE/TIME:

APPROVED BY: NAME/DATE/TIME:

CTDOT
STANDARD SHEET

OFFICE OF ENGINEERING

STANDARD SHEET TITLE:
MD-B 350 MEDIAN BARRIER
SAFETY SHAPE ATTACHMENT TYPE II

STANDARD SHEET NO.:
HW-910_16

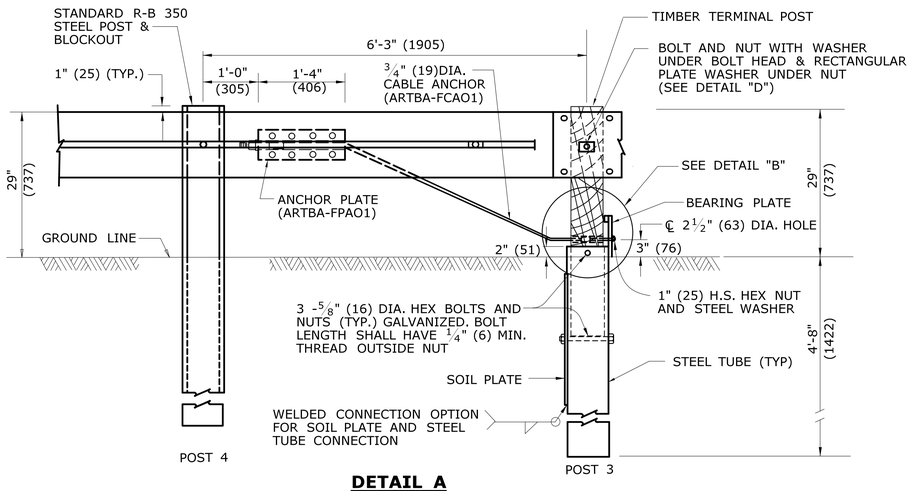

DETAIL A

CABLE ANCHORAGE ASSEMBLY

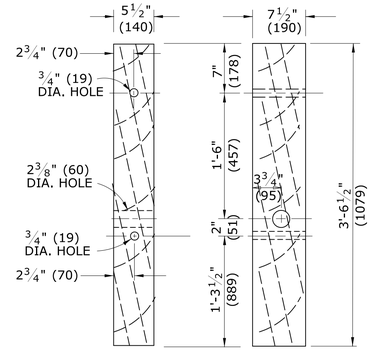

DETAIL C

TIMBER TERMINAL POST

(ARTBA-PDFO1)

(SEE NOTE 2)

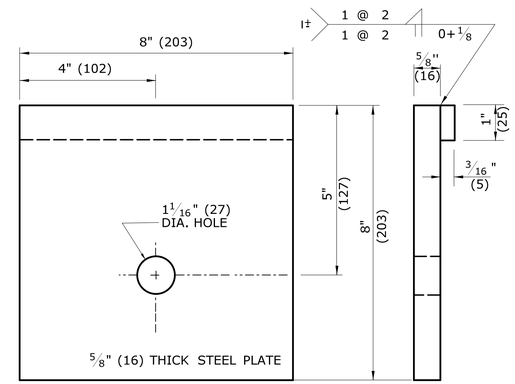

BEARING PLATE

(ARTBA-FPBO1)

GENERAL NOTES:

1. APPROACH END R-B TERMINAL SECTION SHALL ONLY BE USED ON LOW SPEED (<45 MPH) ROADWAYS.
2. POSTS 1, 2 AND 3 ARE TIMBER TERMINAL POSTS (DETAIL "C") WITH STEEL TUBES. POSTS 4 AND 5 ARE STANDARD R-B 350 STEEL POSTS WITH BLOCKOUTS.
3. REFER TO CTDOT STANDARD SPECIFICATIONS FOR MATERIAL AND GENERAL CONSTRUCTION METHODS.
4. MINIMUM RAIL HEIGHT FOR NEW CONSTRUCTION SHALL BE 29" (737) + 1" (25).

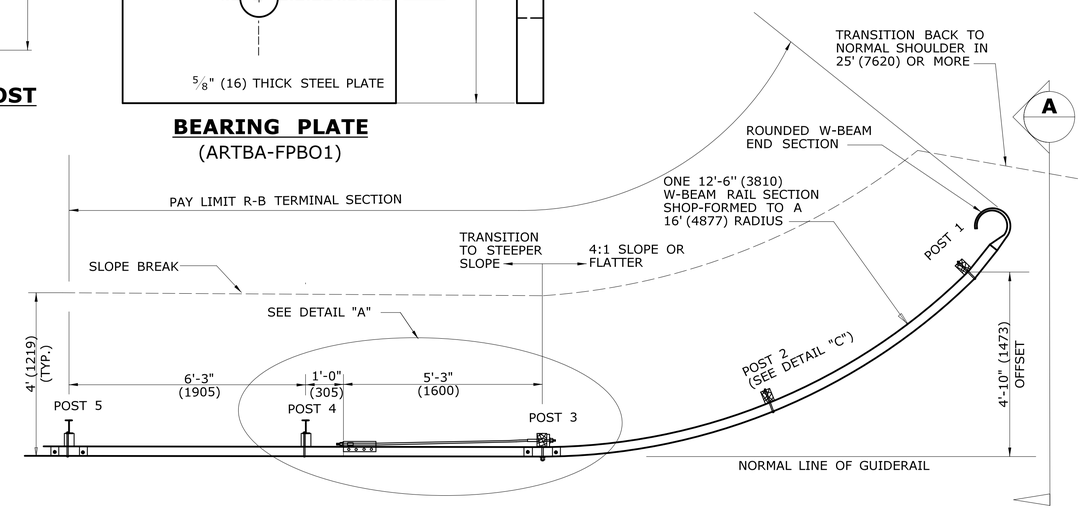

APPROACH END

(TRAILING END NOT SHOWN)

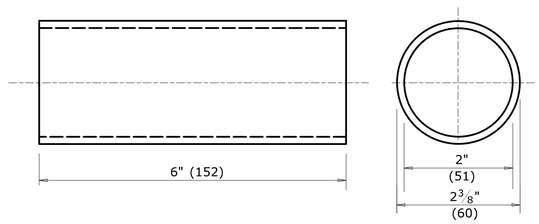

BREAKAWAY TERMINAL POST SLEEVE

(ARTBA-FMMO2)

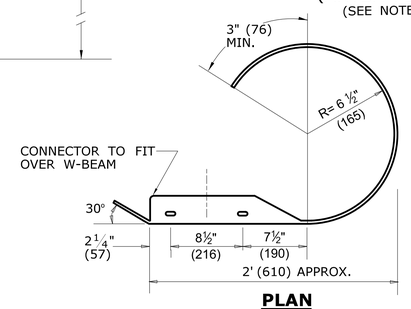

PLAN

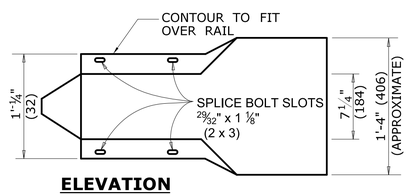

ELEVATION

ROUNDED W-BEAM END SECTION

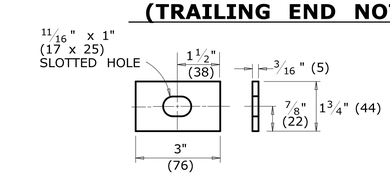

DETAIL D

RECTANGULAR PLATE WASHER

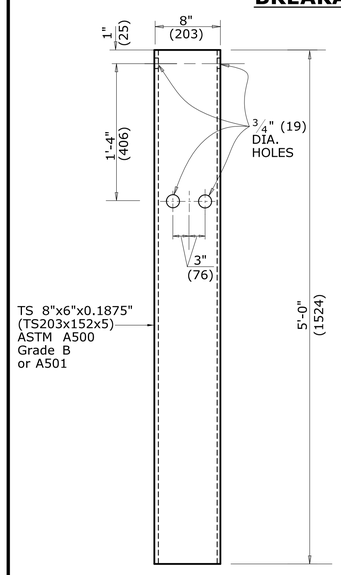

STEEL TUBE

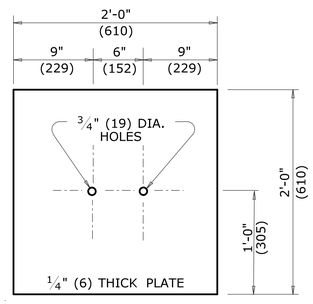

SOIL PLATE (2 Req'd)

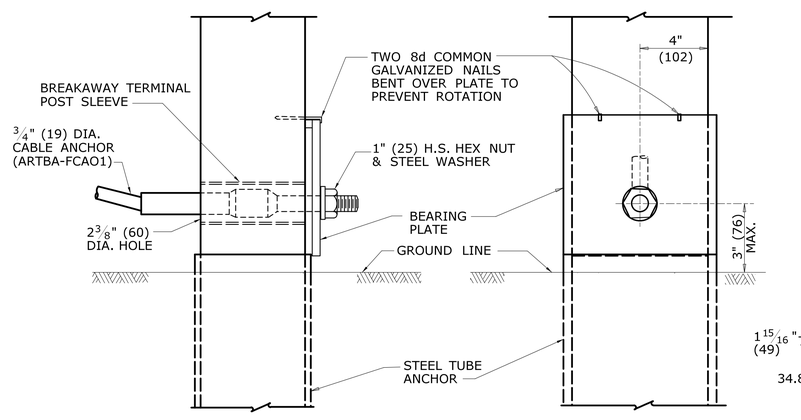

DETAIL B

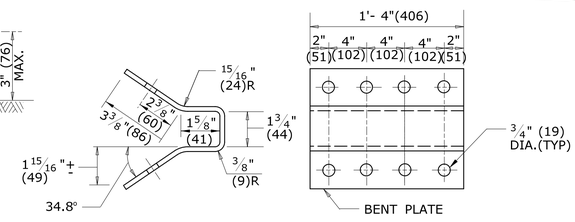

ANCHOR PLATE

(ARTBA-FPAO1)

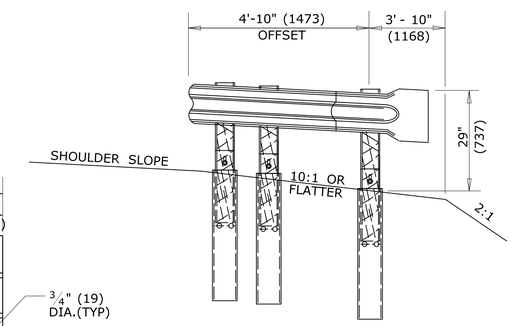

SECTION A -

ALL METRIC DIMENSIONS ARE IN MILLIMETERS (mm) UNLESS OTHERWISE NOTED.

REV.	DATE	REVISION DESCRIPTION
1	6/11	REVISE NOTE 1 -
2	7/13	SHOW SPLICE ON APPROACH END -
-	-	- -
-	-	- -
-	-	- -
-	-	- -

THE INFORMATION, INCLUDING ESTIMATED QUANTITIES OF WORK, SHOWN ON THESE SHEETS IS BASED ON LIMITED INVESTIGATIONS BY THE STATE AND IS IN NO WAY WARRANTED TO INDICATE THE CONDITIONS OF ACTUAL QUANTITIES OF WORK WHICH WILL BE REQUIRED.

Plotted Date: 6/13/2013

NOT TO SCALE

STATE OF CONNECTICUT
DEPARTMENT OF TRANSPORTATION

Filename: CTDOT_HIGHWAY_STD2013.dgn Model: 65 - HW-910_17

SUBMITTED BY: NAME/DATE/TIME:

APPROVED BY: NAME/DATE/TIME:

CTDOT STANDARD SHEET

OFFICE OF ENGINEERING

STANDARD SHEET TITLE:

R-B TERMINAL SECTION

STANDARD SHEET NO.:

HW-910_17

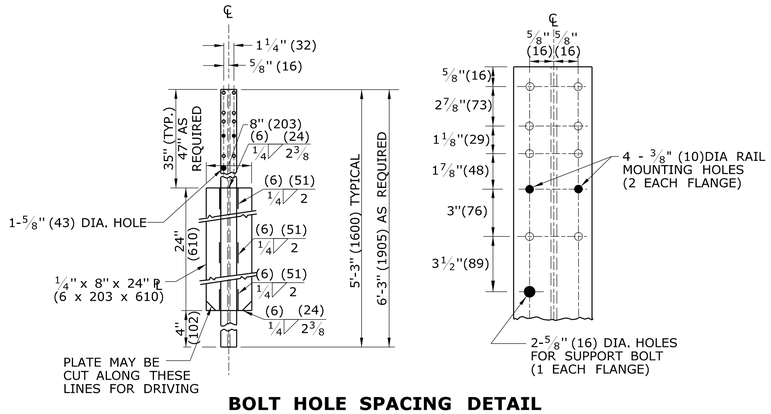

BOLT HOLE SPACING DETAIL
FRONT ELEVATION
S3 x 5.7 POST
(SEE NOTE 1)

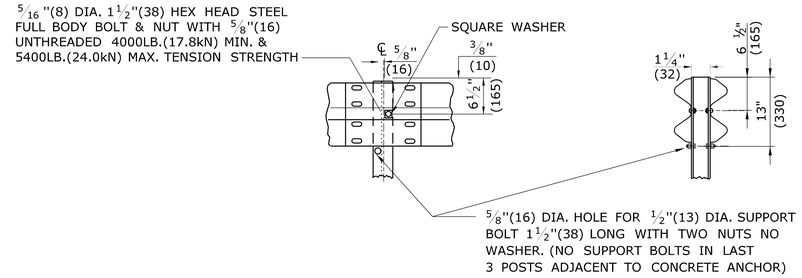

TYPICAL RAIL MOUNTING & SUPPORT BOLT FOR MD-I RAIL

GENERAL NOTES:

1. EIGHT (8) ADDITIONAL 3/8"(10) DIA. HOLES (AS REQUIRED FOR 3 CABLE GUIDERAIL) ARE ACCEPTABLE IN POSTS.
2. J-HOOK BOLTS MAY BE SUBSTITUTED FOR BOTTOM PLATE ANCHORAGE IN CONCRETE END ANCHORS OF THE SAME SIZE STRENGTH AND LENGTH AS NOTED ON THE PLANS.
3. SEE SHEET HW-910_01 FOR HARDWARE AND DELINEATOR DETAILS.

TABLE "A"	
CURVATURE (DEGREE OR RADIUS)	POST SPACING
LESS THAN 26° (220'(67m) RAD OR MORE)	12' - 6"(3810)
219'(67m) TO 111'(34m)	6' - 3"(1905)
110'(34m) TO 76'(23m)	4' - 2"(1270)
75'(23m) TO 50'(15m)	3' - 1 1/2"(952.5)
LESS THAN 50'(15m)	USE NOT RECOMMENDED

FOR CURVES WITH RADII OF 150'(45m) OR LESS ALL RAIL ELEMENTS SHALL BE SHOP FABRICATED TO THE PROPER RADIUS.

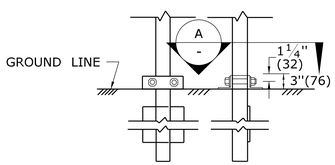

BEARING CLAMP

NOTE: BEARING CLAMP SHALL BE INSTALLED ONLY ON POST NEAREST END ANCHOR

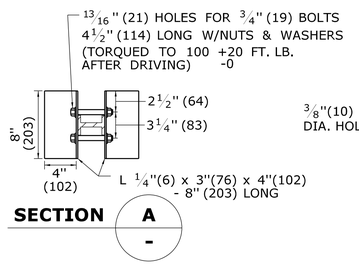

SECTION A

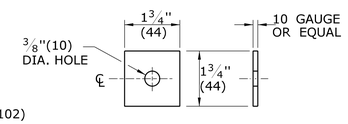

PLACE WASHER IN VALLEY OF RAIL ELEMENT FOR MOUNTING TO POST

SQUARE WASHER

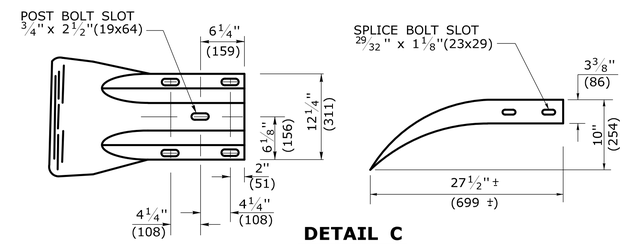

DETAIL C

W-BEAM TERMINAL ELEMENT

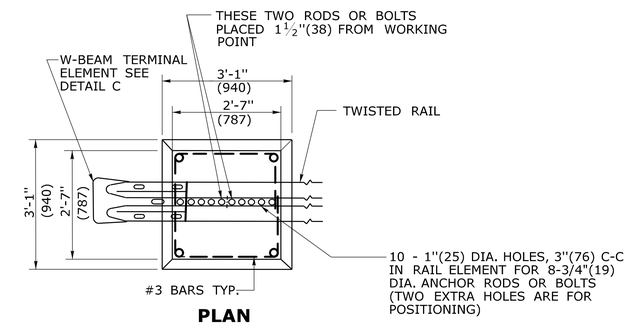

PLAN

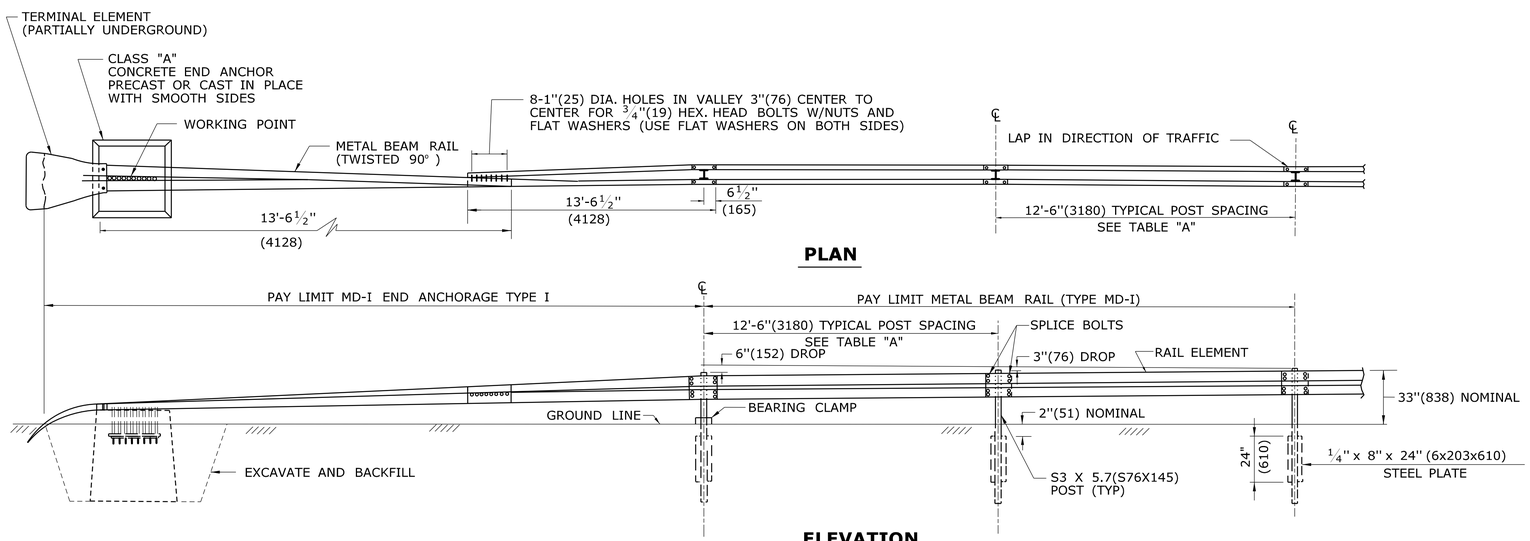

PLAN

ELEVATION

MD-I END ANCHORAGE TYPE I

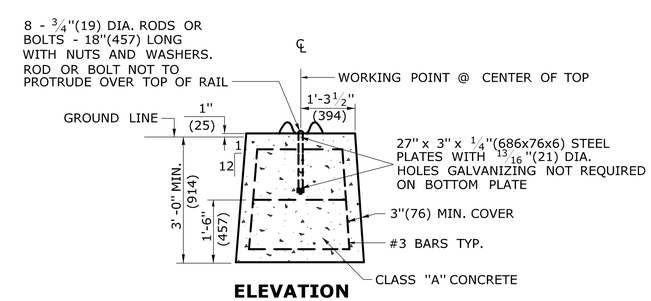

ELEVATION
DETAIL B

CONCRETE END ANCHOR FOR MEDIAN

ALL METRIC DIMENSIONS ARE IN MILLIMETERS (mm) UNLESS OTHERWISE NOTED.

REV.	DATE	REVISION DESCRIPTION
-	-	-
-	-	-
-	-	-
-	-	-
-	-	-
-	-	-

THE INFORMATION, INCLUDING ESTIMATED QUANTITIES OF WORK, SHOWN ON THESE SHEETS IS BASED ON LIMITED INVESTIGATIONS BY THE STATE AND IS IN NO WAY WARRANTED TO INDICATE THE CONDITIONS OF ACTUAL QUANTITIES OF WORK WHICH WILL BE REQUIRED.

Plotted Date: 9/30/2010

NOT TO SCALE

STATE OF CONNECTICUT
DEPARTMENT OF TRANSPORTATION

Filename: CTDOT_HIGHWAY_STD.dgn Model: 58 - HW-910_18

SUBMITTED BY: NAME/DATE/TIME:

APPROVED BY: NAME/DATE/TIME:

CTDOT STANDARD SHEET

OFFICE OF ENGINEERING

STANDARD SHEET TITLE:

METAL BEAM RAIL (TYPE MD-I)

STANDARD SHEET NO.:

HW-910_18

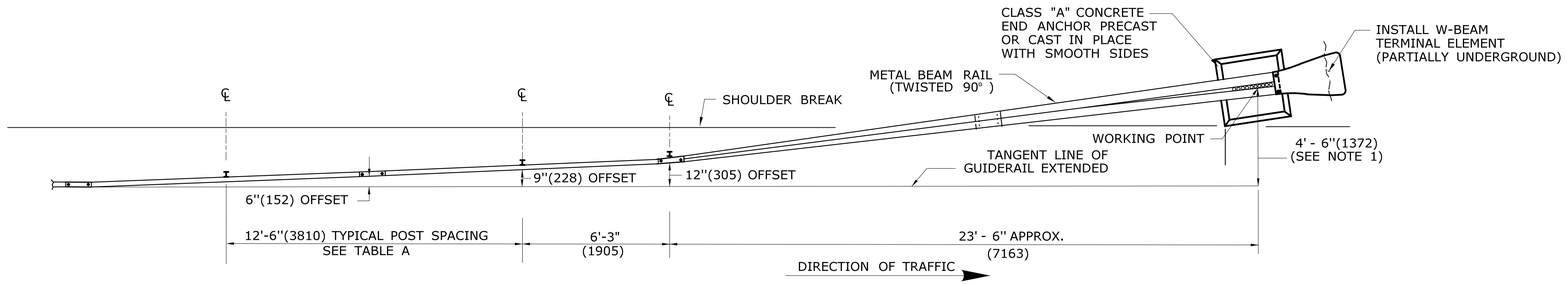

PLAN

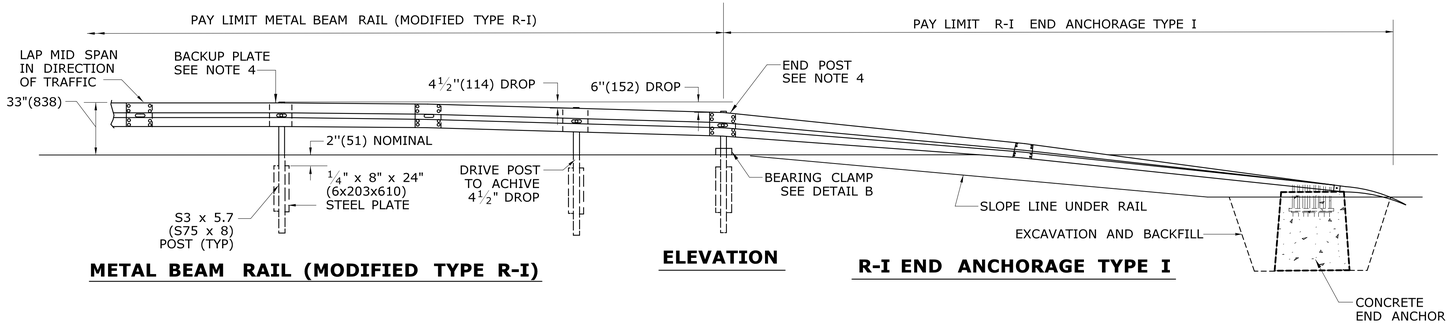

METAL BEAM RAIL (MODIFIED TYPE R-I)

ELEVATION

R-I END ANCHORAGE TYPE I

GENERAL NOTES:

1. OFFSET DIMENSIONS AS SHOWN FOR R-I END ANCHORAGE TYPE I APPLY TO TRAILING END. LOCATION OF LEADING END ANCHORAGE SHALL BE AS SHOWN ON THE PLANS INCLUDING THE OFFSET DIMENSION SHOWN HERE. SEE SHEET HW-911_04.
2. EIGHT (8) ADDITIONAL ⅜"(10) DIA. HOLES (AS REQUIRED FOR 3 CABLE GUIDERAIL) ARE ACCEPTABLE IN POSTS.
3. ATTACH W-BEAM RAIL ELEMENT TO EACH POST. SPLICE ONLY AT MID-SPAN AND LAP IN THE DIRECTION OF TRAFFIC.
4. USE 12 GAUGE W-BEAM BACKUP PLATES FOR ALL POSTS EXCEPT END POST. SEE DETAIL A.
5. NEW MODIFIED R-I GUIDERAIL INCLUDING SYSTEMS ANCHORS AND TRANSITIONS INSTALLED ON EXPRESSWAYS AND RAMPS SHALL USE CLASS B TYPE II (10 GAUGE) W-BEAM RAIL ELEMENTS.
6. CURVES WITH RADII OF 150' (45m) OR LESS SHALL HAVE THE ELEMENT SHOP FABRICATED TO THE PROPER RADIUS. PAYMENT FOR RADIUS RAIL SHALL BE INCLUDED WITH THE ITEM METAL BEAM RAIL (MODIFIED TYPE R-I).
7. WHEN A LEADING END TURN DOWN END ANCHORAGE CANNOT BE INSTALLED OUTSIDE THE CLEAR ZONE THE FOLLOWING WILL APPLY:
   A. INSTALL ANCHORAGE IN A CUT OR ROCK SLOPE. (SEE HW-911_03).
   B. TRANSITION TO R-B 350 GUIDERAIL (SEE HW-910_09c FOR TRANSITION LENGTH) AND ANCHOR WITH A TYPE B IMPACT ATTENUATION SYSTEM (TANGENTIAL SEE HW-1800_03) OR (FLARED SEE HW-1800_01).
8. A TYPE II 12' - 6" (3810) END ANCHOR MAY ALSO BE USED. SEE HW-910_19b.
9. MAXIMUM DESIGN DEFLECTION FOR MODIFIED R-I GUIDERAIL AT STANDARD POST SPACING OF 12'-6" (3810) IS 8' (2.44m). SEE HW-910_19c FOR STRENGTHENING SYSTEMS.

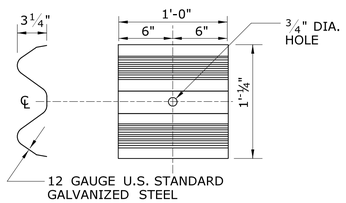

DETAIL A
W-BEAM BACKUP PLATE

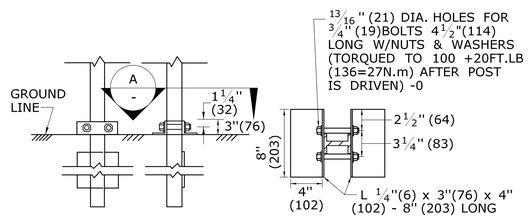

DETAIL B
BEARING CLAMP

NOTE: INSTALL BEARING CLAMP ONLY ON END POST

SECTION A

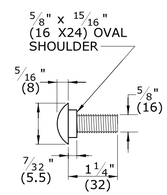

SPLICE BOLT

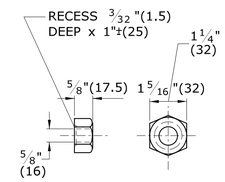

NUT

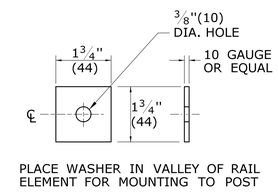

PLACE WASHER IN VALLEY OF RAIL ELEMENT FOR MOUNTING TO POST

SQUARE WASHER

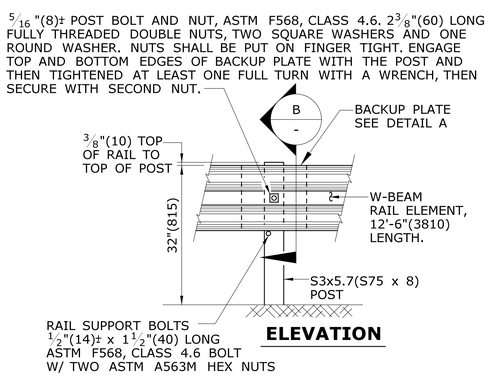

ELEVATION

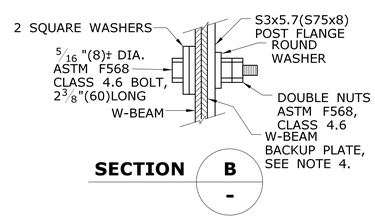

SECTION B

CONNECTION DETAIL AT POST

TYPICAL RAIL MOUNTING AT POST

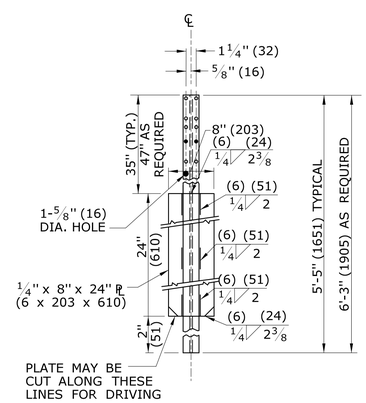

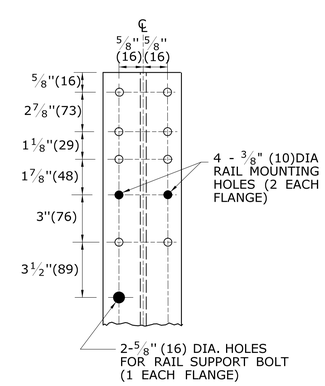

S3x5.7(S75x8) UNIVERSAL POST

SEE NOTE 2

TABLE A	
CURVATURE (DEGREE OR RADIUS)	POST SPACING
R>(220'(67m)	12' - 6"(3810)
R=219'(67m) TO 111'(34m)	6' - 3"(1905)
R=110'(34m) TO 76'(23m)	4' - 2"(1270)
R=75'(23m) TO 50'(15m)	3' - 1½"(952.5)
R=LESS THAN 50'(15m)	DO NOT INSTALL

W-BEAM ELEMENTS ON A RADIUS LESS THAN OR EQUAL TO 150' (45.72m) SHALL BE SHOP FABRICATED TO THE REQUIRED CURVATURE AND PAYMENT FOR SUCH CURVED LENGTH SHALL BE INCLUDED WITH THE PAY ITEM FOR MODIFIED R-I TYPE GUIDERAIL.

ALL METRIC DIMENSIONS ARE IN MILLIMETERS (mm) UNLESS OTHERWISE NOTED

REV.	DATE	REVISION DESCRIPTION	SHEET NO.
1	7/13	ADD NOTE 9 AND DIMENSION REVISIONS	-
-	-	-	-
-	-	-	-
-	-	-	-
-	-	-	-
-	-	-	-
-	-	-	-

THE INFORMATION, INCLUDING ESTIMATED QUANTITIES OF WORK, SHOWN ON THESE SHEETS IS BASED ON LIMITED INVESTIGATIONS BY THE STATE AND IS IN NO WAY WARRANTED TO INDICATE THE CONDITIONS OF ACTUAL QUANTITIES OF WORK WHICH WILL BE REQUIRED.

Plotted Date: 6/13/2013

NOT TO SCALE

STATE OF CONNECTICUT
DEPARTMENT OF TRANSPORTATION

Filename: CTDOT_HIGHWAY_STD2013.dgn Model: 67 - HW-910_19a

SUBMITTED BY: NAME-DATE/TIME

APPROVED BY: NAME-DATE/TIME

CTDOT STANDARD SHEET

OFFICE OF ENGINEERING

STANDARD SHEET TITLE:

METAL BEAM RAIL (MODIFIED TYPE R-I) AND END ANCHORAGE TYPE I

STANDARD SHEET NO.: HW-910_19a

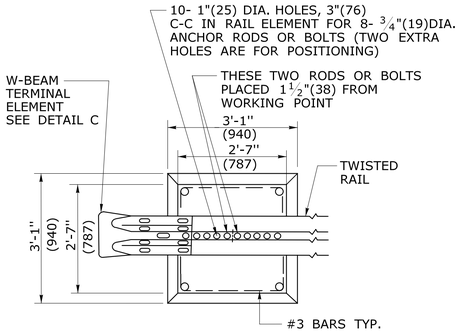

PLAN

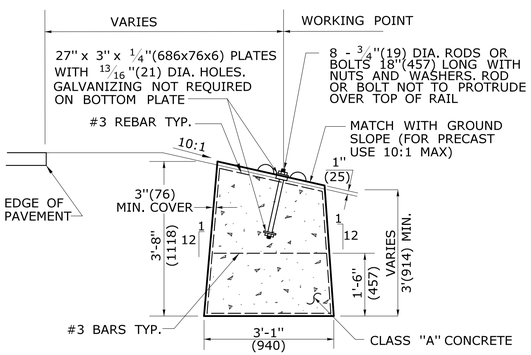

ELEVATION

CONCRETE END ANCHOR

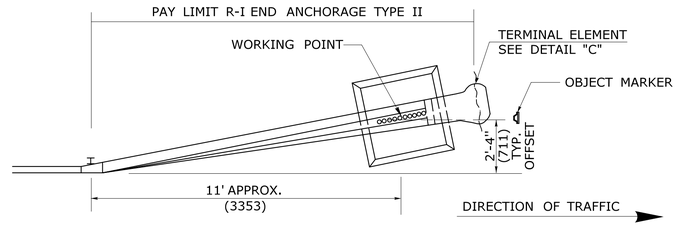

PLAN

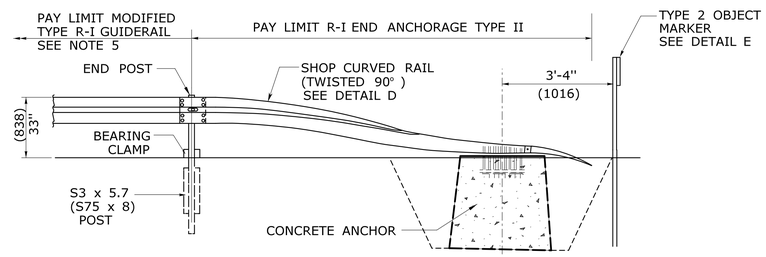

ELEVATION

R-I END ANCHORAGE TYPE II

SEE NOTE 2

GENERAL NOTES:

1. OFFSET DIMENSIONS AS SHOWN FOR R-I END ANCHORAGE TYPE II APPLY TO TRAILING END. LOCATION OF LEADING END ANCHORAGE SHALL BE AS SHOWN ON THE PLANS INCLUDING THE OFFSET DIMENSION SHOWN HERE. SEE SHEET HW-911_04.
2. R-I END ANCHORAGE TYPE II SHALL USE CLASS A (12 GAUGE) TERMINAL AND W-BEAM ELEMENTS.
3. OTHER RADII WHICH CAN BE DEMONSTRATED TO PROVIDE THE INSTALLATIONS SHOWN FOR END ANCHORAGE TYPE II MAY BE APPROVED.
4. TYPE II 12'- 6" (3810) END ANCHOR MAY BE USED ONLY ON ROADS WITH DESIGN SPEEDS LESS THAN 45 MPH.
5. MODIFIED R-I GUIDERAIL REQUIRES MID-SPAN SPLICE. REFER TO HW-910_19a FOR DETAIL OF POST SPACING AT END ANCHOR.

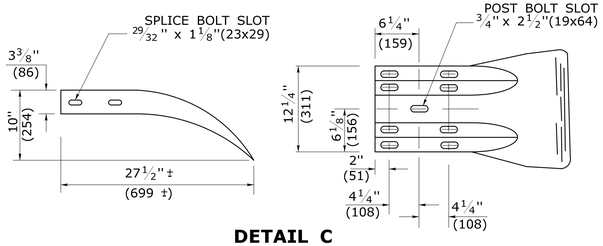

DETAIL C

W-BEAM TERMINAL ELEMENT

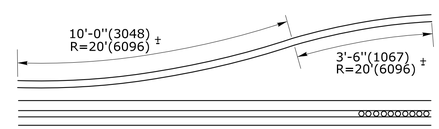

DETAIL D

SHOP CURVED RAIL

SEE NOTE 3

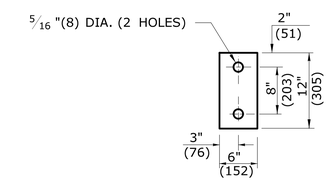

DETAIL E

TYPE 2 OBJECT MARKER

SIGN # 51-5030

OBJECT MARKER FACE SHALL BE YELLOW TYPE III RETROREFLECTORIZED. THE BOTTOM OF TYPE 2 OBJECT MARKER SHALL BE 4'(1219) ABOVE GROUND LEVEL MOUNTED ON METAL DELINEATOR POST. IT SHALL BE USED TO IDENTIFY CULVERT ENDS AND TYPE II END ANCHORS, OR AS DIRECTED BY THE ENGINEER.

ALL METRIC DIMENSIONS ARE IN MILLIMETERS (mm) UNLESS OTHERWISE NOTED

REV.	DATE	REVISION DESCRIPTION	SHEET NO.
1	7/13	ADD NOTE 5	
-	-	-	-
-	-	-	-
-	-	-	-
-	-	-	-
-	-	-	-
-	-	-	-

THE INFORMATION, INCLUDING ESTIMATED QUANTITIES OF WORK, SHOWN ON THESE SHEETS IS BASED ON LIMITED INVESTIGATIONS BY THE STATE AND IS IN NO WAY WARRANTED TO INDICATE THE CONDITIONS OF ACTUAL QUANTITIES OF WORK WHICH WILL BE REQUIRED.

Plotted Date: 6/13/2013

NOT TO SCALE

STATE OF CONNECTICUT
DEPARTMENT OF TRANSPORTATION

Filename: CTDOT_HIGHWAY_STD2013.dgn Model: 68 - HW-910_19b

SUBMITTED BY: NAME-DATE/TIME

APPROVED BY: NAME-DATE/TIME

CTDOT
STANDARD SHEET

OFFICE OF ENGINEERING

STANDARD SHEET TITLE:

METAL BEAM RAIL (MODIFIED TYPE R-I) AND END ANCHORAGE TYPE II

STANDARD SHEET NO.:

HW-910_19b

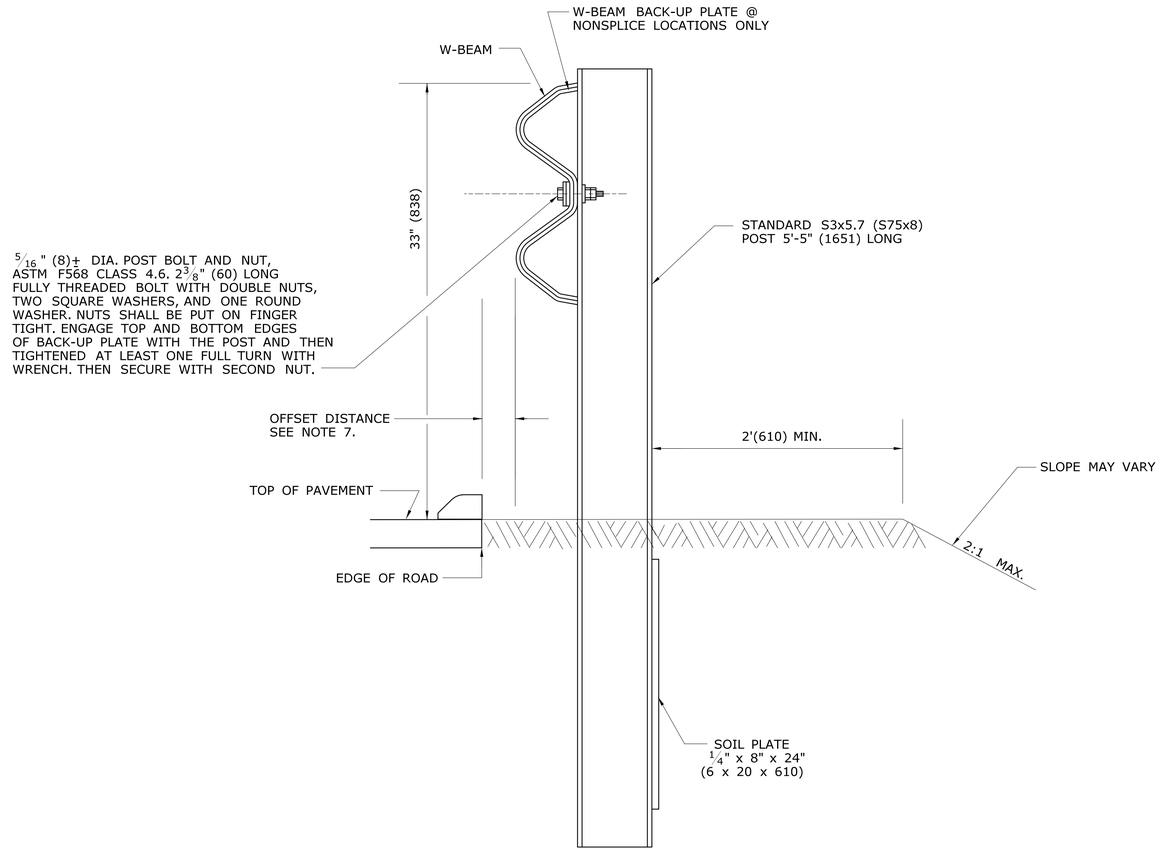

SECTION A/-

GENERAL NOTES:

1. FASTEN ALL POSTS TO RAIL ELEMENT.
2. DO NOT INSTALL BACK UP PLATE @ SPLICE POST LOCATIONS.
3. FOR DUAL DIRECTION ROADWAYS, STRENGTH TRANSITION SHALL BE THE SAME BEFORE AND AFTER AREA OF CONCERN.
4. IF OFFSET DISTANCE IS LESS THAN 4'-6" (1397) SEE HW-910_04 FOR R-B 350 GUIDERAIL AND SYSTEMS.
5. REFER TO STANDARD SHEET HW-910_19a FOR MODIFIED R-I HARDWARE DETAILS.
6. INSTALLATIONS ON EXPRESSWAYS AND RAMPS SHALL USE CLASS B TYPE II (10 GAUGE) W-BEAM RAIL ELEMENTS.
7. INSTALL RAIL FACE 6" (127) OFF EDGE OF ROAD. IF CURB IS PRESENT, SET FACE OF RAIL AT BACK OF CURB.

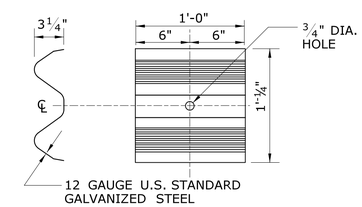

DETAIL A

W-BEAM BACKUP PLATE

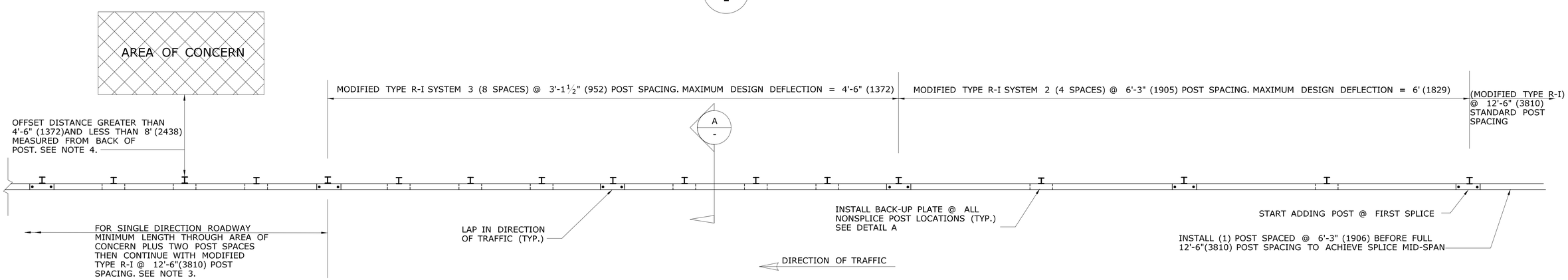

PLAN

METAL BEAM RAIL (MODIFIED TYPE R-I) SYSTEMS 2 & 3

ALL METRIC DIMESIONS ARE IN MILLIMETERS (mm) UNLESS OTHERWISE NOTED.

REV.	DATE	REVISION DESCRIPTION

THE INFORMATION, INCLUDING ESTIMATED QUANTITIES OF WORK, SHOWN ON THESE SHEETS IS BASED ON LIMITED INVESTIGATIONS BY THE STATE AND IS IN NO WAY WARRANTED TO INDICATE THE CONDITIONS OF ACTUAL QUANTITIES OF WORK WHICH WILL BE REQUIRED.

Plotted Date: 6/21/2013

NOT TO SCALE

STATE OF CONNECTICUT
DEPARTMENT OF TRANSPORTATION

Filename: CTDOT_HIGHWAY_STD2013.dgn Model: 69 - HW-910_19c

SUBMITTED BY: NAME/DATE/TIME:

APPROVED BY: NAME/DATE/TIME:

CTDOT STANDARD SHEET

OFFICE OF ENGINEERING

STANDARD SHEET TITLE:

MBR (MODIFIED TYPE R-I) SYSTEMS 2 & 3

STANDARD SHEET NO.:

HW-910_19c

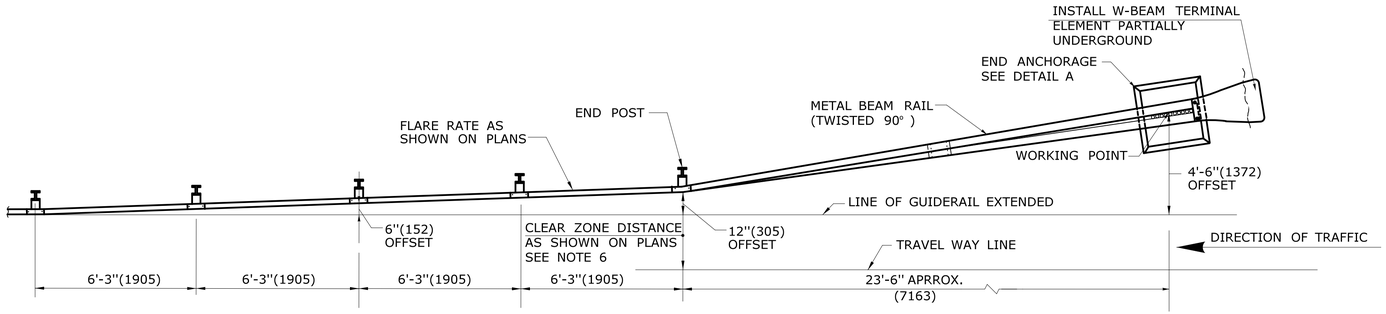

PLAN

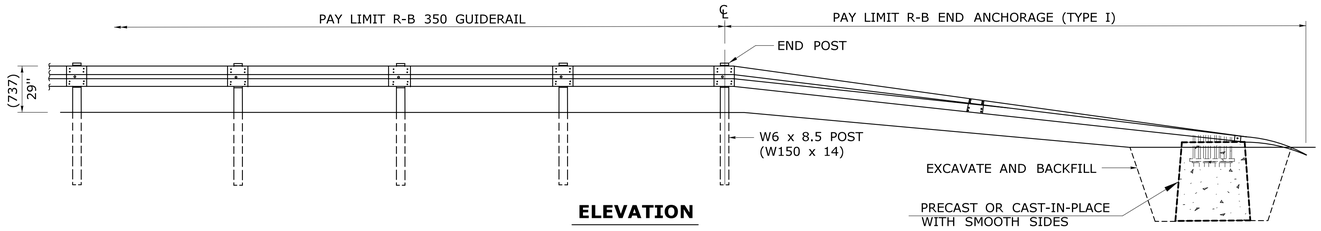

ELEVATION

R-B END ANCHORAGE TYPE I (ROADSIDE APPLICATION)

GENERAL NOTES:

1. R-B END ANCHORAGE TYPE I INSTALLED ON FREEWAYS AND RAMPS SHALL USE CLASS B (10 GAUGE) TERMINAL AND W-BEAM RAIL ELEMENTS. ALL OTHER R-B END ANCHORAGE TYPE I SHALL USE CLASS A (12 GAUGE) TERMINAL AND W-BEAM RAIL ELEMENTS.
2. R-B END ANGHORAGE TYPE II SHALL USE CLASS A (12 GAUGE) TERMINAL AND W-BEAM RAIL ELEMENTS.
3. OTHER RADII WHICH CAN BE DEMONSTRATED TO PROVIDE THE INSTALLATIONS SHOWN FOR END ANCHORAGE TYPE II MAY BE APPROVED.
4. J-HOOK BOLTS MAY BE SUBSTITUTED FOR BOTTOM PLATE ANCHORAGE IN CONCRETE END ANCHORS USING THE SAME SIZE, STRENGTH, AND LENGTH AS NOTED ON THE PLANS.
5. MINIMUM RAIL HEIGHT FOR NEW CONSTRUCTION SHALL BE 29" (737) + 1'(25).
6. R-B TYPE I END ANCHOR: INSTALL LEADING END USING DESIGN CLEAR ZONE DISTANCE MEASURED FROM TRAVEL WAY LINE TO END POST AS SHOWN ON PLANS, THEN PLACE CONCRETE ANCHOR 4'-6"(1372) FROM THE LINE OF GUIDERAIL EXTENSION. INSTALL TRAILING END ON DUAL DIRECTION ROADWAYS IN THE SAME MANNER EXCEPT MEASURE CLEAR ZONE FROM THE DOUBLE YELLOW LINE. INSTALL TRAILING END ON SINGLE DIRECTION ROADWAYS MEASURED FROM THE GUIDERAIL LINE EXTENDED AND OFFFSET 4'-6" (1372).

   R-B TYPE II END ANCHOR: INSTALL ONLY ON ROADWAYS WITH DESIGN SPEEDS < 45mph (72kph). FOR DUAL DIRECTION ROADWAYS, INSTALL IN THE SAME MANNER AS TYPE I END ANCHOR FOR BOTH LEADING AND TRAILING END USING DESIGN CLEAR ZONE DISTANCE EXCEPT PLACE CONCRETE ANCHOR 2'-4" (711) MEASURED FROM THE LINE OF GUIDERAIL EXTENDED. INSTALL TRAILING END ON SINGLE DIRECTION ROADWAYS MEASURED FROM THE GUIDERAIL LINE EXTENDED AND OFFSET 2'-4" (711).
7. SEE HW-911_04 FOR TYPICAL END ANCHOR GRADING PLAN.

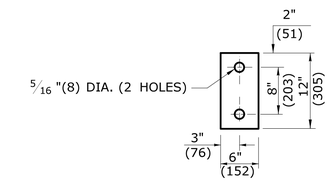

DETAIL B

TYPE 2 OBJECT MARKER

SIGN # 51-5030

OBJECT MARKER FACE SHALL BE YELLOW TYPE III RETROREFLECTORIZED. THE BOTTOM OF TYPE 2 OBJECT MARKER SHALL BE 4'(1219) ABOVE GROUND LEVEL MOUNTED ON METAL DELINEATOR POST. IT SHALL BE USED TO IDENTIFY CULVERT ENDS AND TYPE II END ANCHORS, OR AS DIRECTED BY THE ENGINEER.

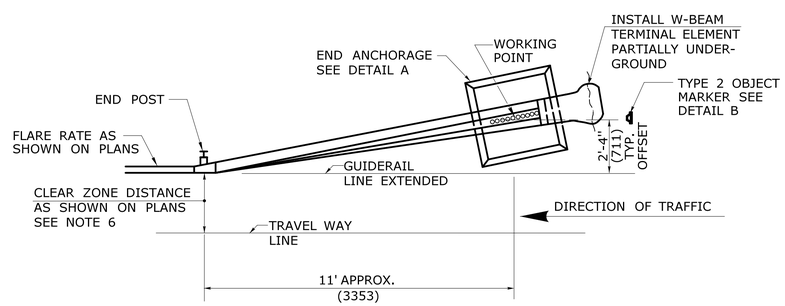

PLAN

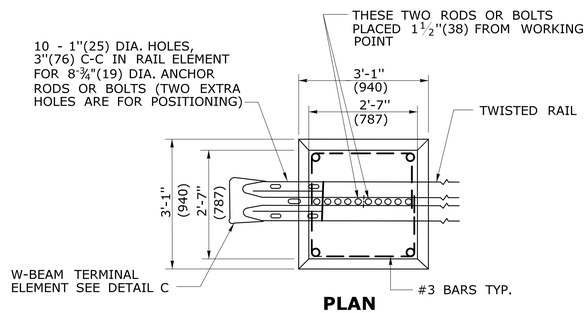

PLAN

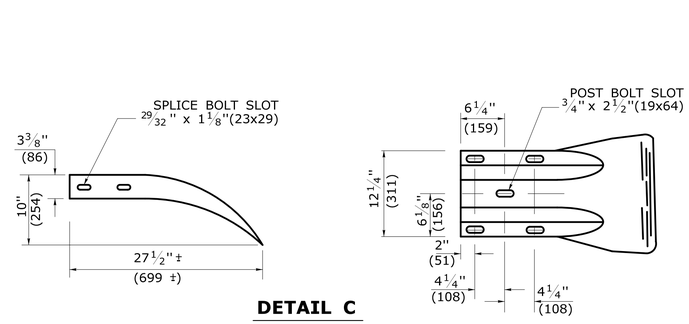

DETAIL C

W-BEAM TERMINAL ELEMENT

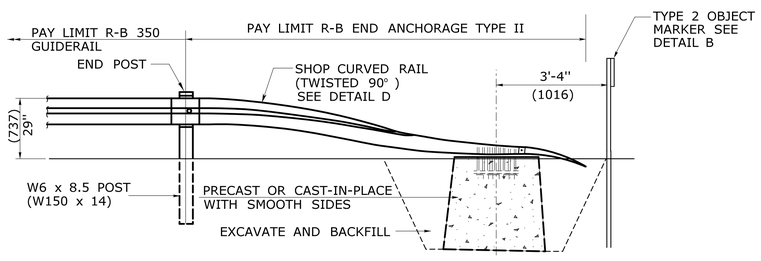

ELEVATION

R-B END ANCHORAGE TYPE II

SEE NOTE 2

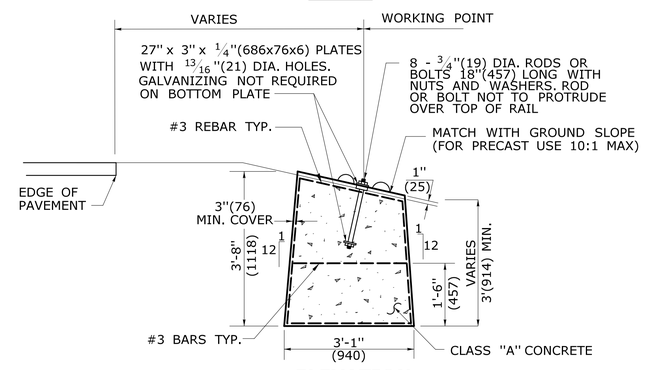

ELEVATION

DETAIL A

ROADSIDE CONCRETE END ANCHOR

SEE NOTE 4

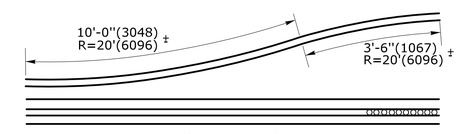

DETAIL D

SHOP CURVED RAIL

SEE NOTE 3

ALL METRIC DIMENSIONS ARE IN MILLIMETERS (mm) UNLESS OTHERWISE NOTED.

REV.	DATE	REVISION DESCRIPTION
1	6/11	REVISED TYPE I AND II ANCHOR FOR CLEAR ZONE PLACEMENT
2	7/13	ADD POST OFFSET DISTANCE -
-	-	- -
-	-	- -
-	-	- -
-	-	- -

THE INFORMATION, INCLUDING ESTIMATED QUANTITIES OF WORK, SHOWN ON THESE SHEETS IS BASED ON LIMITED INVESTIGATIONS BY THE STATE AND IS IN NO WAY WARRANTED TO INDICATE THE CONDITIONS OF ACTUAL QUANTITIES OF WORK WHICH WILL BE REQUIRED.

Plotted Date: 6/13/2013

NOT TO SCALE

STATE OF CONNECTICUT
DEPARTMENT OF TRANSPORTATION

Filename: CTDOT_HIGHWAY_STD2013.dgn Model: 70 - HW-911_01

SUBMITTED BY: NAME/DATE/TIME:

APPROVED BY: NAME/DATE/TIME:

CTDOT STANDARD SHEET

OFFICE OF ENGINEERING

STANDARD SHEET TITLE:

R-B END ANCHORAGE TYPE I AND II

STANDARD SHEET NO.:

HW-911_01

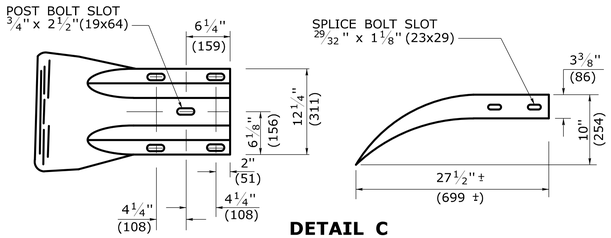

DETAIL C

W-BEAM TERMINAL ELEMENT

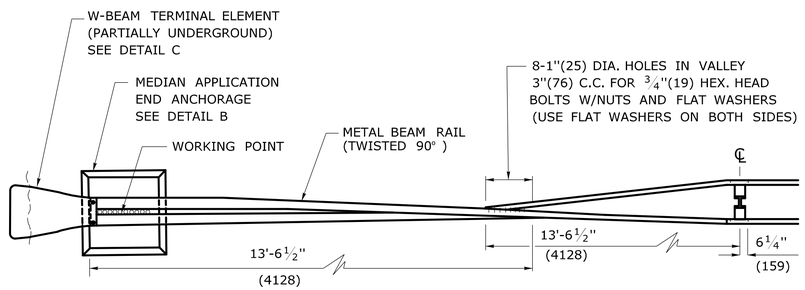

PLAN

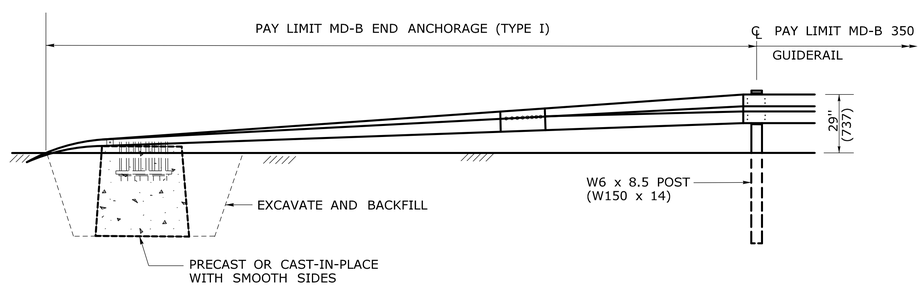

ELEVATION

MD-B END ANCHORAGE TYPE I (MEDIAN APPLICATION)

GENERAL NOTES:

1. J-HOOK BOLTS MAY BE SUBSTITUTED FOR BOTTOM PLATE ANCHORAGE IN CONCRETE END ANCHORS OUSING THE SAME SIZE, STRENGTH, AND LENGTH AS NOTED ON THE PLANS.
2. MINIMUM RAIL HEIGHT FOR NEW CONSTRUCTION SHALL BE 29" (737) ± 1" (25).

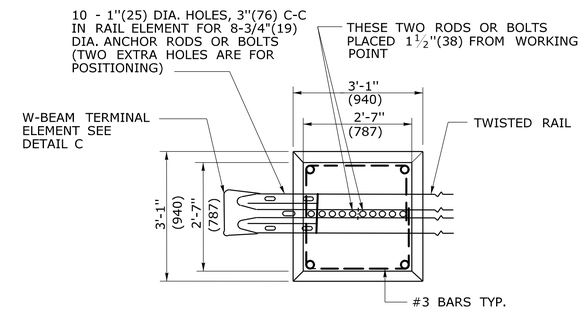

PLAN

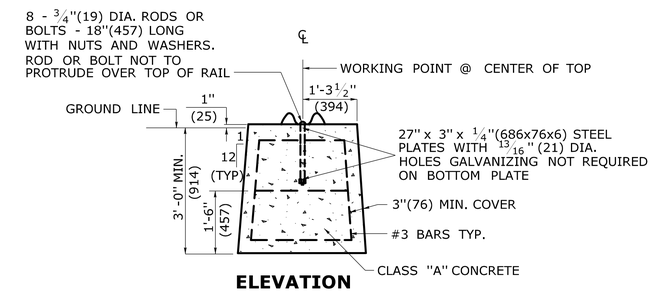

ELEVATION
DETAIL B

CONCRETE END ANCHOR FOR MEDIAN RAIL

ALL METRIC DIMENSIONS ARE IN MILLIMETERS (mm) UNLESS OTHERWISE NOTED.

REV.	DATE	REVISION DESCRIPTION
-	-	-
-	-	-
-	-	-
-	-	-
-	-	-
-	-	-

THE INFORMATION, INCLUDING ESTIMATED QUANTITIES OF WORK, SHOWN ON THESE SHEETS IS BASED ON LIMITED INVESTIGATIONS BY THE STATE AND IS IN NO WAY WARRANTED TO INDICATE THE CONDITIONS OF ACTUAL QUANTITIES OF WORK WHICH WILL BE REQUIRED.

Plotted Date: 9/30/2010

NOT TO SCALE

STATE OF CONNECTICUT
DEPARTMENT OF TRANSPORTATION

Filename: CTDOT_HIGHWAY_STD.dgn Model: 60 - HW-911_02

SUBMITTED BY: NAME/DATE/TIME:

APPROVED BY: NAME/DATE/TIME:

CTDOT STANDARD SHEET

OFFICE OF ENGINEERING

STANDARD SHEET TITLE: MD-B END ANCHORAGE TYPE I

STANDARD SHEET NO.: HW-911_02

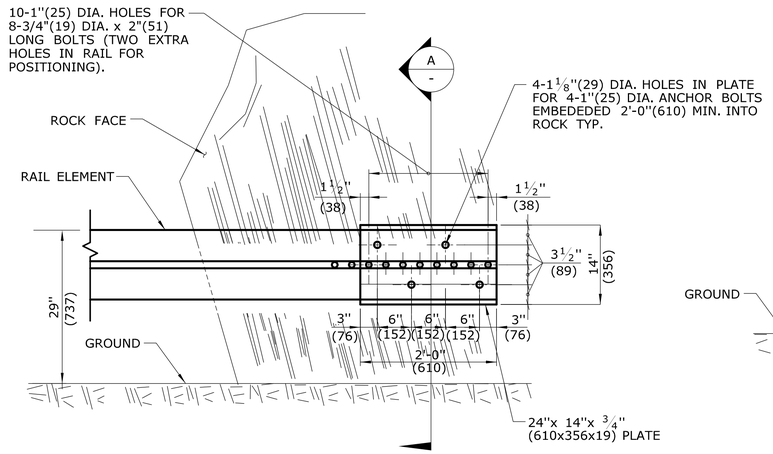

ELEVATION

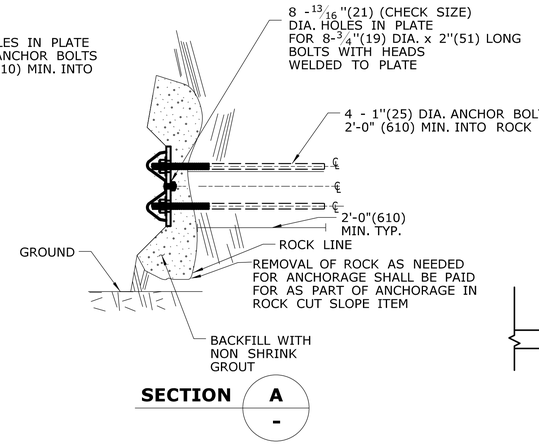

SECTION A -

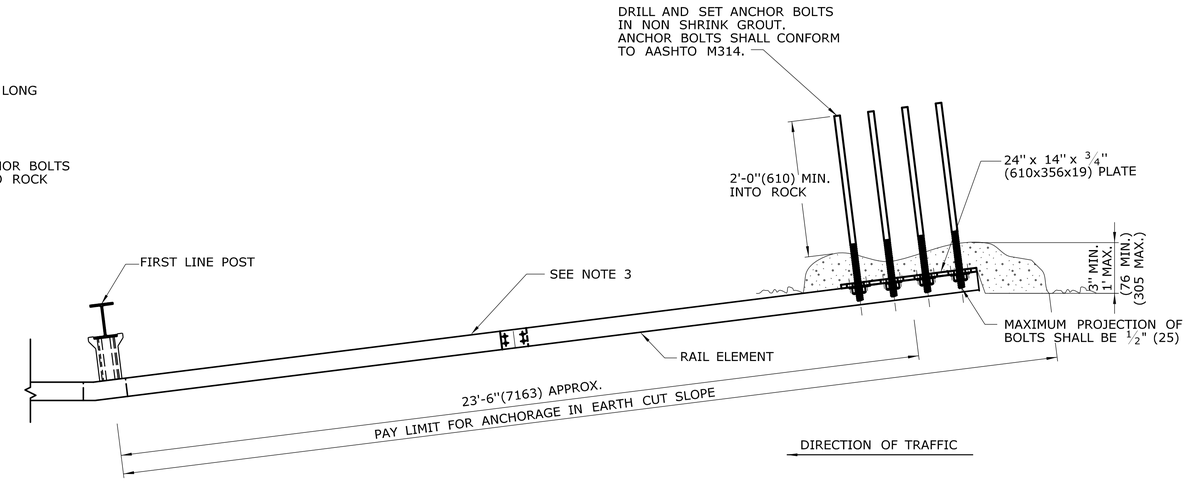

PLAN

DETAILS OF ANCHORAGE IN ROCK CUT SLOPE

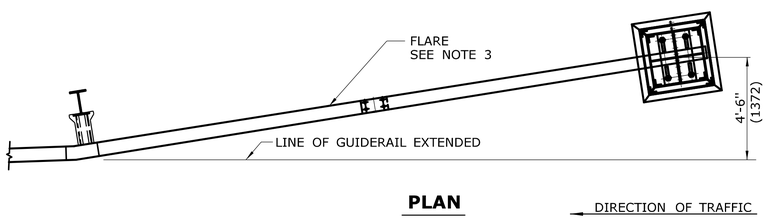

PLAN

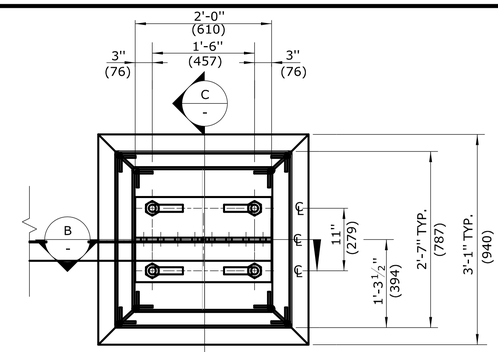

PLAN

GENERAL NOTES:

1. ANCHORAGE IN AN EARTH CUT SLOPE SHALL BE IN A CUT SLOPE 3:1 OR STEEPER. FULL RAIL HEIGHT MUST BE MAINTAINED TO TOE OF SLOPE AND A MINIMUM 1'(305) COVER SHALL BE PROVIDED OVER THE RAIL ELEMENT.
2. ANCHORAGE IN EARTH CUT SLOPE AND ROCK CUT SLOPE INSTALLED ON LIMITED ACCESS HIGHWAYS AND RAMPS SHALL USE CLASS B TYPE II (10 GAUGE) W-BEAM RAIL ELEMENTS.
3. THE MAXIMUM FLARE RATES FOR THESE TERMINAL TREATMENTS SHALL CONFORM TO THE SAME REQUIREMENTS AS STANDARD GUIDERAIL IN ACCORDANCE WITH THE CTDOT HIGHWAY DESIGN MANUAL.
4. MINIMUM RAIL HEIGHT FOR NEW CONSTRUCTION SHALL BE 29" (737) ± 1" (25).

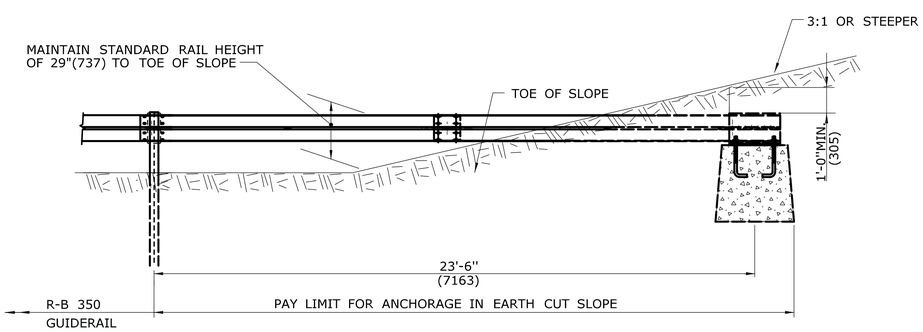

ELEVATION

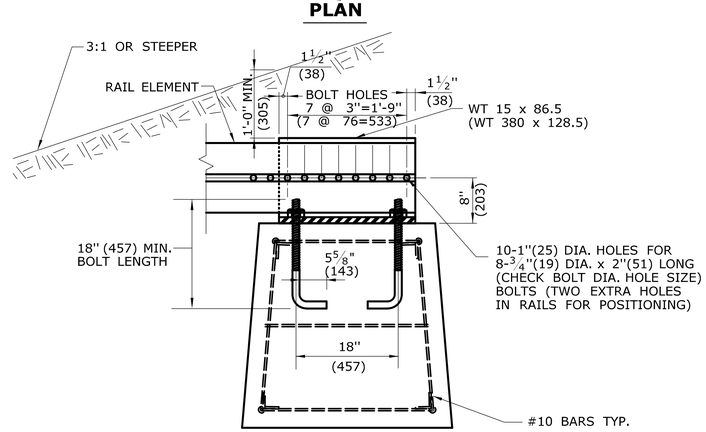

SECTION B -

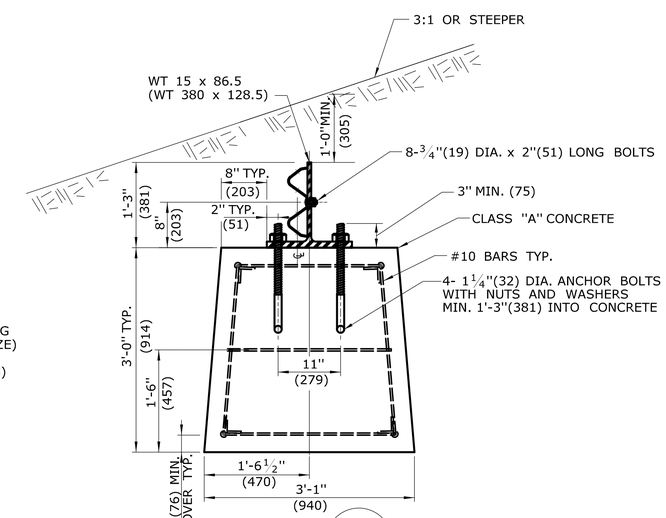

SECTION C -

DETAILS OF ANCHORAGE IN EARTH CUT SLOPE

ALL METRIC DIMENSIONS ARE IN MILLIMETERS (mm) UNLESS OTHERWISE NOTED.

REV.	DATE	REVISION DESCRIPTION
-	-	-
-	-	-
-	-	-
-	-	-
-	-	-
-	-	-

THE INFORMATION, INCLUDING ESTIMATED QUANTITIES OF WORK, SHOWN ON THESE SHEETS IS BASED ON LIMITED INVESTIGATIONS BY THE STATE AND IS IN NO WAY WARRANTED TO INDICATE THE CONDITIONS OF ACTUAL QUANTITIES OF WORK WHICH WILL BE REQUIRED.

Plotted Date: 9/30/2010

NOT TO SCALE

STATE OF CONNECTICUT
DEPARTMENT OF TRANSPORTATION

Filename: CTDOT_HIGHWAY_STD.dgn Model: 61 - HW-911_03

SUBMITTED BY: NAME/DATE/TIME:

APPROVED BY: NAME/DATE/TIME:

CTDOT STANDARD SHEET

OFFICE OF ENGINEERING

STANDARD SHEET TITLE:

ANCHOR IN EARTH CUT SLOPE
ANCHOR IN ROCK CUT SLOPE

STANDARD SHEET NO.:

HW-911_03

GENERAL NOTES:

1. THE PLACEMENT OF THE FACE OF GUIDERAIL SHALL BE AS FOLLOWS:

   WITHOUT CURBING: FACE OF GUIDERAIL MAY BE PLACED BEYOND THE EDGE OF SHOULDER. REFER TO GUIDERAIL STANDARD SHEETS FOR CRITERIA OF RAIL PLACEMENT ON SLOPES AND DESIGN DEFLECTION DISTANCES.

   WITH CURBING: FACE OF GUIDERAIL MUST BE PLACED FLUSH WITH FACE OF CURBING.

2. LEADING END TURN-DOWN END ANCHOR MUST BE INSTALLED OUTSIDE DESIGN CLEAR ZONE. FOR TRAILING END TURN-DOWN END ANCHORS ON DUAL DIRECTION ROADWAYS, THIS DISTANCE IS MEASURED FROM THE CENTER LINE. CLEAR ZONE VARIES. SEE PLANS.

3. FLARE RATE VARIES BASED ON DESIGN SPEED OF ROAD. SEE PLANS.

4. TURN-DOWN END ANCHOR OFFSET DISTANCE MAY VARY BASED ON ANCHOR TYPE INSTALLED. SEE HW-911_01 AND PLANS.

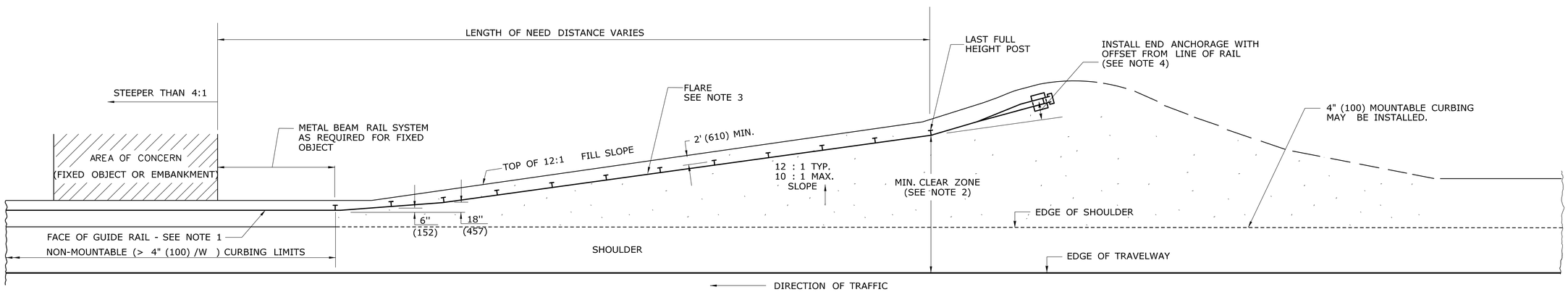

TYPICAL GRADING FOR GUIDERAIL TURN-DOWN END ANCHOR APPROACH TO AREA OF CONCERN

ALL METRIC DIMENSIONS ARE IN MILLIMETERS (mm) UNLESS OTHERWISE NOTED.

REV.	DATE	REVISION DESCRIPTION
1	6/11	ADDED NOTE 4, REVISED TITLE AND NOTES
-	-	-
-	-	-
-	-	-
-	-	-
-	-	-

THE INFORMATION, INCLUDING ESTIMATED QUANTITIES OF WORK, SHOWN ON THESE SHEETS IS BASED ON LIMITED INVESTIGATIONS BY THE STATE AND IS IN NO WAY WARRANTED TO INDICATE THE CONDITIONS OF ACTUAL QUANTITIES OF WORK WHICH WILL BE REQUIRED.

Plotted Date: 6/4/2011

NOT TO SCALE

STATE OF CONNECTICUT
DEPARTMENT OF TRANSPORTATION

Filename: CTDOT_HIGHWAY_STD_JUNE2011.dgn Model: 63 - HW-911_04

SUBMITTED BY: NAME/DATE/TIME:

APPROVED BY: NAME/DATE/TIME:

CTDOT
STANDARD SHEET

OFFICE OF ENGINEERING

STANDARD SHEET TITLE:

TYPICAL GRADING PLAN FOR W-BEAM GUIDERAIL TURN-DOWN END ANCHOR

STANDARD SHEET NO.:

HW-911_04

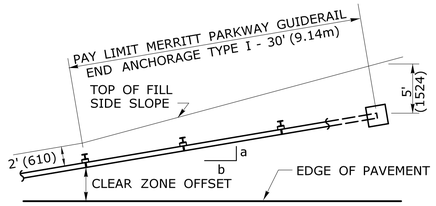

PLAN

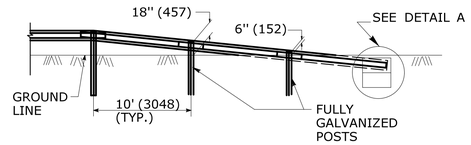

ELEVATION

MERRITT PARKWAY GUIDERAIL END ANCHORAGE TYPE I (BURIED ANCHOR)

NOTE: SEE PLAN SHEETS FOR FLARE RATE a:b.

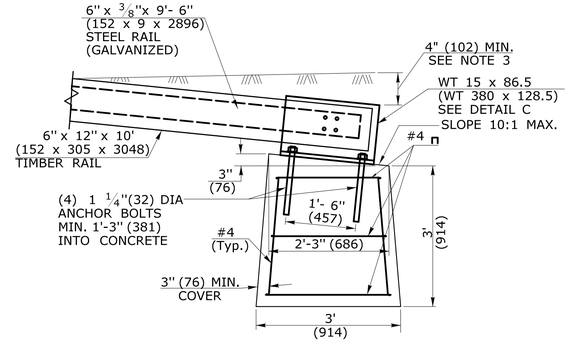

ELEVATION DETAIL A

GENERAL NOTES:

1. MATERIALS AND CONSTRUCTION OF THE MERRITT PARKWAY GUIDERAIL END ANCHORS SHALL CONFORM TO THE SPECIAL PROVISIONS PROVIDED WITH THE PROJECT. ALL HARDWARE IN CONTACT WITH THE GROUND SHALL BE GALVANIZED IN ACCORDANCE WITH THE SPECIAL PROVISION.
2. FOR THE END ANCHOR TYPE II, EXTEND THE FLARE INTO THE CUT SLOPE UNTIL A MINIMUM 12" (305) OF COVER IS OBTAINED OVER THE GUIDERAIL ELEMENT.
3. FOR THE END ANCHOR TYPE I, EXTEND THE FLARE OUTSIDE THE CLEAR ZONE AND BURY THE GUIDERAIL ANCHOR AND ELEMENT TO OBTAIN A MINIMUM COVER OF 4" (102). SEE DETAIL A.
4. BEGIN THE FLARE AT THE NEAREST POST TO A TRANSITION POINT BETWEEN FILL AND CUT AS DIRECTED BY THE ENGINEER.
5. THE GUIDERAIL FLARE SHOWN ON THE PLAN SHEETS IS THE MINIMUM LENGTH AND RATE REQUIRED AS DIRECTED BY THE ENGINEER. FLARE THE GUIDERAIL SO THAT THE TERMINAL SECTION IS OUTSIDE THE CLEAR ZONE.

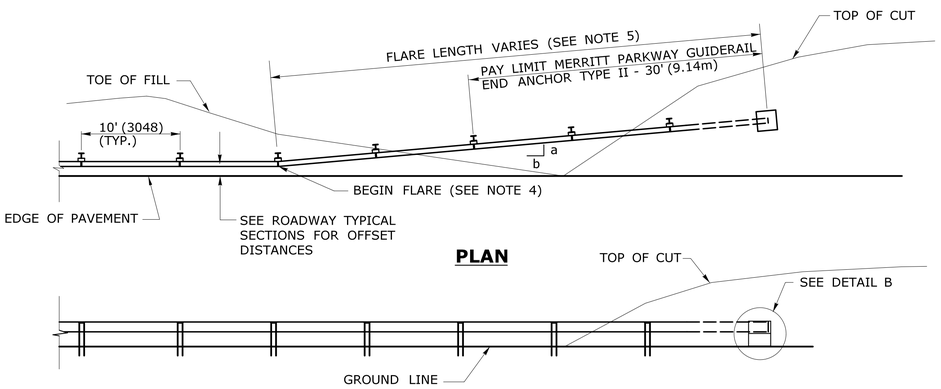

PLAN

ELEVATION

MERRITT PARKWAY GUIDERAIL END ANCHORAGE TYPE II (EARTH CUT SLOPE ANCHOR)

NOTE: SEE PLAN SHEETS FOR FLARE RATE a:b.

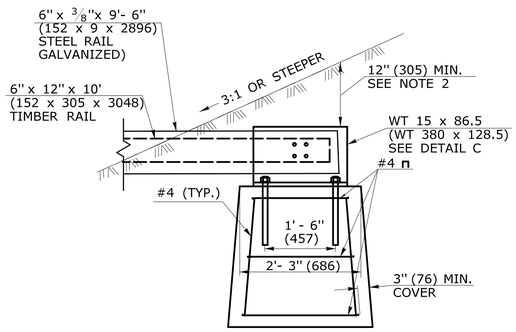

ELEVATION DETAIL B

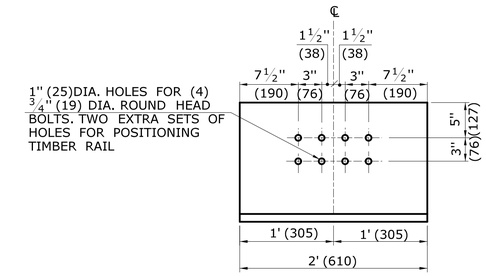

ELEVATION DETAIL C

WT 15 x 86.5 (GALVANIZED) (WT 380 X 128.5)

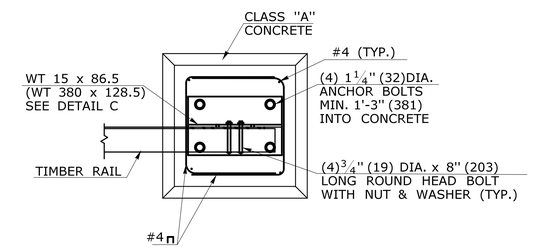

PLAN DETAIL D

PLAN VIEW FOR TYPE I & II ANCHOR

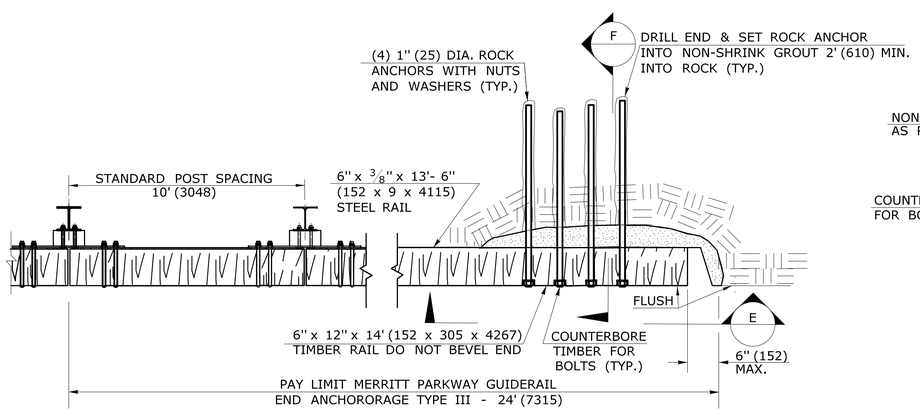

PLAN

MERRITT PARKWAY GUIDERAIL END ANCHORAGE TYPE III (ROCK CUT ANCHOR)

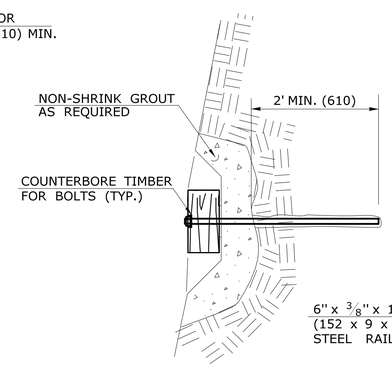

SECTION F

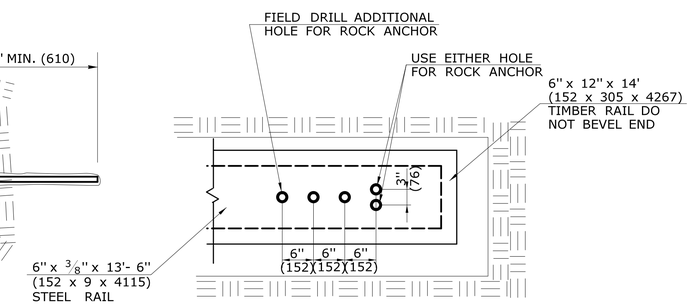

SECTION E

ALL METRIC DIMENSIONS ARE IN MILLIMETERS (mm) UNLESS OTHERWISE NOTED.

REV.	DATE	REVISION DESCRIPTION
1	7/13	ERRATA -
-	-	-
-	-	-
-	-	-
-	-	-
-	-	-

THE INFORMATION, INCLUDING ESTIMATED QUANTITIES OF WORK, SHOWN ON THESE SHEETS IS BASED ON LIMITED INVESTIGATIONS BY THE STATE AND IS IN NO WAY WARRANTED TO INDICATE THE CONDITIONS OF ACTUAL QUANTITIES OF WORK WHICH WILL BE REQUIRED.

Plotted Date: 6/13/2013

NOT TO SCALE

STATE OF CONNECTICUT
DEPARTMENT OF TRANSPORTATION

Filename: CTDOT_HIGHWAY_STD2013.dgn Model: 74 - HW-911_05

SUBMITTED BY: NAME/DATE/TIME:

APPROVED BY: NAME/DATE/TIME:

CTDOT STANDARD SHEET

OFFICE OF ENGINEERING

STANDARD SHEET TITLE:

MERRITT PARKWAY GUIDERAIL END ANCHORS

STANDARD SHEET NO.:

HW-911_05

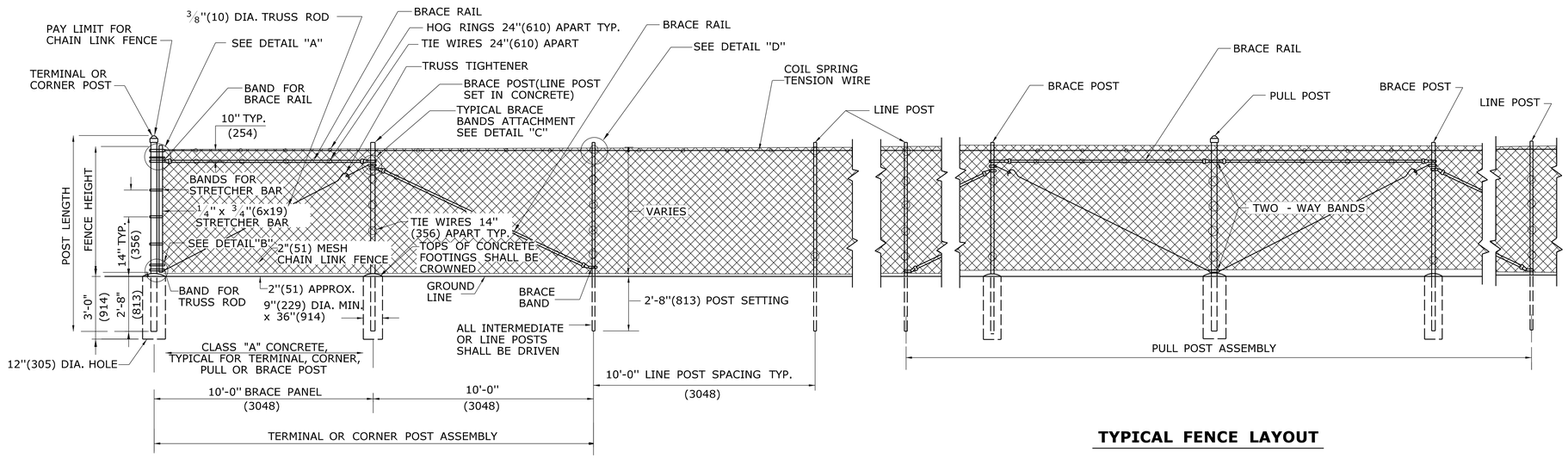

ROUND PIPE TERMINAL CORNER OR PULL POST

TYPICAL FENCE LAYOUT

GENERAL NOTES:

1. REFER TO SPECIFICATIONS FOR LOCATION OF PULL POST ASSEMBLIES.
2. ALL SQUARE AND ROUND POSTS WILL BE CAPPED TO PREVENT WATER FROM ENTERING.
3. WHERE ROCK IS ENCOUNTERED, IT SHALL BE DRILLED AND THE POSTS SET IN CONCRETE OR MORTAR.
4. FENCE SHALL BE PLACED WITH FABRIC FACING OUTSIDE HIGHWAY RIGHT OF WAY OR AS DIRECTED BY THE ENGINEER.

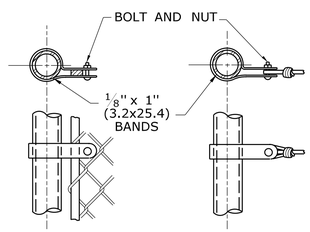

DETAIL "A"
STRETCHER BAR AND TENSION WIRE ATTACHMENTS

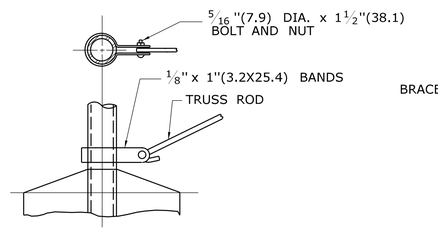

DETAIL "B"
TRUSS ROD ATTACHMENT

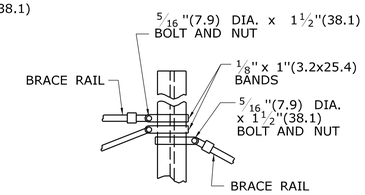

DETAIL "C"
ATTACHMENT OF BRACE RAILS TO LINE POSTS (TYPICAL)

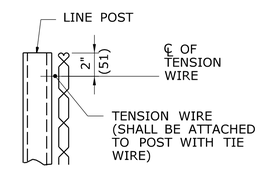

DETAIL "D"
LOCATION OF TENSION WIRE

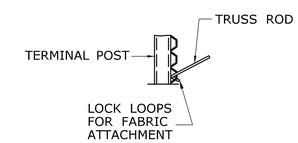

DETAIL "E"
TRUSS ROD ATTACHMENT

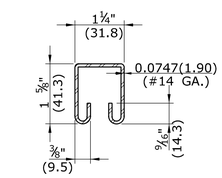

DETAIL "F"
BRACE RAIL

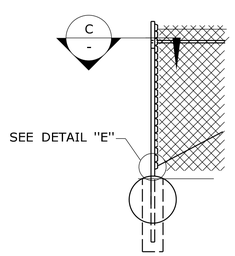

TERMINAL, CORNER OR PULL POST

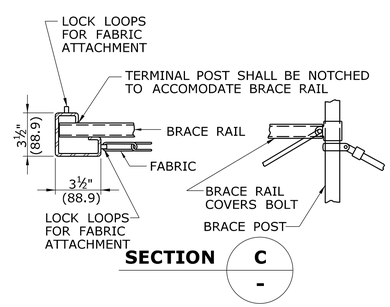

FABRIC AND BRACE RAIL ATTACHMENT

			FENCE HEIGHT			
			6'(1.8m) OR LESS		GREATER THAN 6'(1.8m)	
	TYPE	MATERIAL	DIMENSIONS INCHES(mm)	WEIGHT LBS/FT(kg/m)	DIMENSIONS INCHES(mm)	WEIGHT LBS/FT(kg/m)
LINE BRACE OR INTERMEDIATE POST	"C"	STEEL	1.87 X 1.62 (47.5x41.1)	2.40(3.57)	2.25 x 1.70(57.2x43.2)	2.78(4.14)
	PIPE	STEEL CLASS 1	1.90(48.3) O.D.	2.72(4.05)	2.37(60.2) O.D.	3.65(5.43)
		STEEL CLASS 2		2.28(3.39)		3.12(4.64)
		ALUM. ALLOY		0.94(1.40)		1.25(1.86)
BRACE RAIL (OR TOP RAIL WHEN SPECIFIED)	ROLL- FORMED*	STEEL	1.62 X 1.25 (41.1x31.75)	1.35(2.01)	——	——
	PIPE	STEEL CLASS 1	1.31(33.3) O.D.	1.68(2.50)	1.66(42.2) O.D.	2.27(3.38)
		STEEL CLASS 2		1.34(1.99)		1.84(2.74)
		ALUM. ALLOY	1.62(41.1) O.D.	0.78(1.16)	1.62(41.1) O.D.	0.78(1.16)
TERMINAL CORNER OR PULL POST	PIPE	STEEL CLASS 1 STEEL CLASS 2 ALUM. ALLOY	2.37(60.2) O.D.	3.65(5.43) 3.12(4.64) 1.25(1.86)	2.87(72.9) O.D.	5.79(8.62) 4.64(6.91) 2.00(2.98)

NOTE: A MINUS TOLERANCE OF 5% IN SIZE AND WEIGHT SHALL BE ALLOWED FOR THESE MEMBERS, BUT WILL NOT APPLY TO THE ZINC OR POLYVINYL CHLORINE COATING. * DIMENSIONS AND WEIGHT ARE FOR A FENCE HEIGHT OF 9'(2.7m) OR LESS.

MINIMUM DIMENSIONS AND WEIGHTS FOR POSTS AND RAILS

REV.	DATE	REVISION DESCRIPTION
1	6/01/10	REMOVE "H" POST & SQUARE TUBULAR POST DETAILS AND NOTES
-	-	-
-	-	-
-	-	-
-	-	-
-	-	-

THE INFORMATION, INCLUDING ESTIMATED QUANTITIES OF WORK, SHOWN ON THESE SHEETS IS BASED ON LIMITED INVESTIGATIONS BY THE STATE AND IS IN NO WAY WARRANTED TO INDICATE THE CONDITIONS OF ACTUAL QUANTITIES OF WORK WHICH WILL BE REQUIRED.

Plotted Date: 6/23/2011

NOT TO SCALE

STATE OF CONNECTICUT
DEPARTMENT OF TRANSPORTATION

Filename: CTDOT_HIGHWAY_STD_JUNE2011.dgn Model: 65 - HW-913_01

SUBMITTED BY: NAME/DATE/TIME:

APPROVED BY: NAME/DATE/TIME:

CTDOT STANDARD SHEET

OFFICE OF ENGINEERING

STANDARD SHEET TITLE: CHAIN LINK FENCE

STANDARD SHEET NO.: HW-913_01

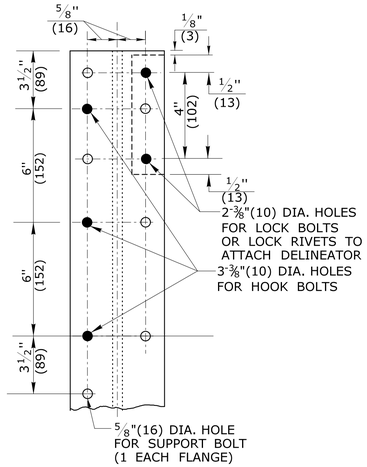

ELEVATION

DETAIL A

BOLT HOLE SPACING

FOR UNIVERSAL POST
(SEE NOTE 5)

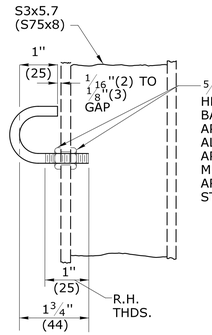

DETAIL B

HOOK BOLT

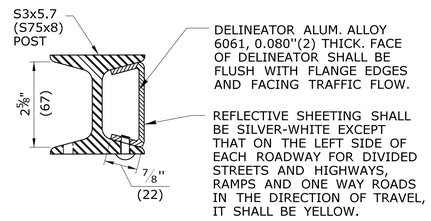

PLAN

DETAIL C

DELINEATOR INSTALLATION DETAIL

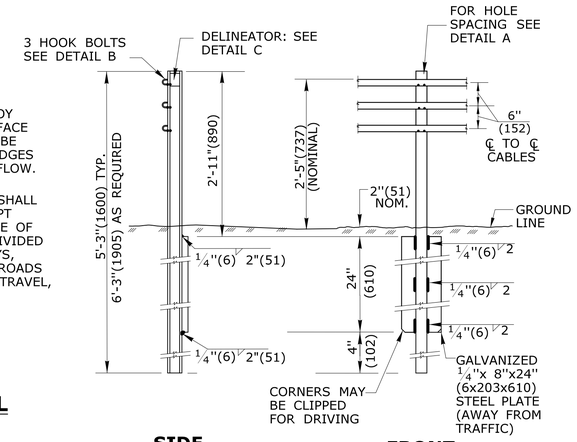

SIDE **FRONT**

DETAIL D

POST S3x5.7 (S75x8)

GENERAL NOTES:

1. INSTALL DELINEATORS EVERY 32'(9.8m). SEE DETAIL C. DO NOT INSTALL A DELINEATOR ON POSTS THAT ARE GREATER THAN 12'(3.7m) FROM THE EDGE OF SHOULDER. IN INSTANCES WHERE THE POST SPACING DOES NOT COINCIDE WITH THE ABOVE DIMENSION, THE DELINEATORS SHOULD BE INSTALLED ON THE NEAREST POST. THE DELINEATOR SPACING SHALL REMAIN CONSISTENT THROUGHOUT THE RUN OF RAILING REGARDLESS OF CHANGES FROM ONE SYSTEM TO ANOTHER. DO NOT DELINEATE POSTS IN THE INTERMEDIATE ANCHORAGE SECTION, TYPICAL APPROACH OR TERMINAL SECTION.

2. FOR ARRANGEMENT OF SPRING CABLE ASSEMBLIES (COMPENSATING DEVICES) AND TURNBUCKLE CABLE END ASSEMBLIES, THE FOLLOWING CRITERIA SHALL APPLY: (SEE STANDARD SHEET HW-918_01b FOR DETAILS)
   --LENGTH OF CABLE RUNS UP TO 1000'(305m) - USE COMPENSATING DEVICE (DETAIL F) ON ONE END, AND TURNBUCKLE CABLE END ASSEMBLY (DETAIL H) ON THE OTHER END OF EACH INDIVIDUAL CABLE.
   --LENGTH OF CABLE RUNS 1000'(305m) TO 2000'(610m) - USE COMPENSATING DEVICE (DETAIL F) ON THE ENDS OF EACH INDIVIDUAL CABLE.
   --LENGTH OF CABLE RUNS OVER 2000'(610m) - START NEW STRETCH BY INTERLACING AT LAST PARALLEL POST (SEE TYPICAL INTERMEDIATE SECTION DETAIL). PRIOR TO FINAL ACCEPTENCE BY THE STATE AND DEPENDING ON THE TEMPERATURE AT THE TIME OF ADJUSTMENTS, THE FOLLOWING TABLE SHALL BE USED TO TIGHTEN THE TURNBUCKLES:

TEMPERATURE (DEGREES FARENHEIT)					
120° TO 100°	79° TO 60°	59° TO 40°	39° TO 20°	19° TO 0°	1° TO -20°
SPRING COMPRESSION FROM UNLOADED POSITION IN EACH SPRING = STANDARD SPRING LENGTH					
1" (25)	1 1/2" (38)	2" (51)	2 1/2" (64)	3" (76)	4" (102)

3. ALTERNATIVE DESIGNS FOR A COMBINATION OR SINGLE UNIT COMPENSATING DEVICE AND TURNBUCKLE ASSEMBLY MAY BE SUBMITTED FOR APPROVAL.

4. AT ALL LOCATIONS WHERE THE CABLE IS CONNECTED TO A CABLE SOCKET WITH A WEDGE TYPE CONNECTION, ONE WIRE OF THE WIRE ROPE SHALL BE CRIMPED OVER THE BASE OF THE WEDGE TO HOLD IT FIRMLY IN PLACE.

5. BOLT HOLES AS SHOWN IN DETAIL A ARE FOR USE AS FOLLOWS: 3-3/8" (10) DIA. HOLES FOR HOOK BOLTS AND 2-3/8" (10) DIA. DELINEATOR MOUNTING HOLES FOR EACH DIRECTION OF TRAFFIC. HOLES SHOWN SOLID ARE FOR INSTALLATIONS TO THE RIGHT OF TRAFFIC FLOW. ONE 5/8"(16) DIA. HOLE (AS REQUIRED FOR METAL BEAM RAIL) IS ACCEPTABLE.

6. ON ROADWAYS WITH DESIGN SPEED ≥ 45 MPH (72kph)THE MINIMUM LENGTH OF THREE CABLE GUIDE RAILING, EXCLUDING ANCHOR SECTIONS IS 248'(75.6m). ON ROADWAYS WITH DESIGN SPEEDS < 45 MPH (72kph) THE MINIMUM LENGTH OF THREE CABLE GUIDERAIL EXCLUDING ANCHOR SECTIONS IS 156'(4755) WITH AN 8' POST SPACING. WHEN SYSTEM 2 IS REQUIRED, EITHER THE ENTIRE RUN OF RAIL SHALL BE INSTALLED USING A SINGLE SYSTEM OR A 248'(75.6m) MINIMUM LENGTH OF THE SYSTEM SHALL BE PROVIDED.

7. WHEN STAGGERING CABLE SPLICES. PROVIDE A MINIMUM OF 20'(6.1m) BETWEEN ANY PAIR. PROVIDE A MINIMUM OF 100'(30.5m) BETWEEN CABLE SPLICES ON THE SAME CABLE.

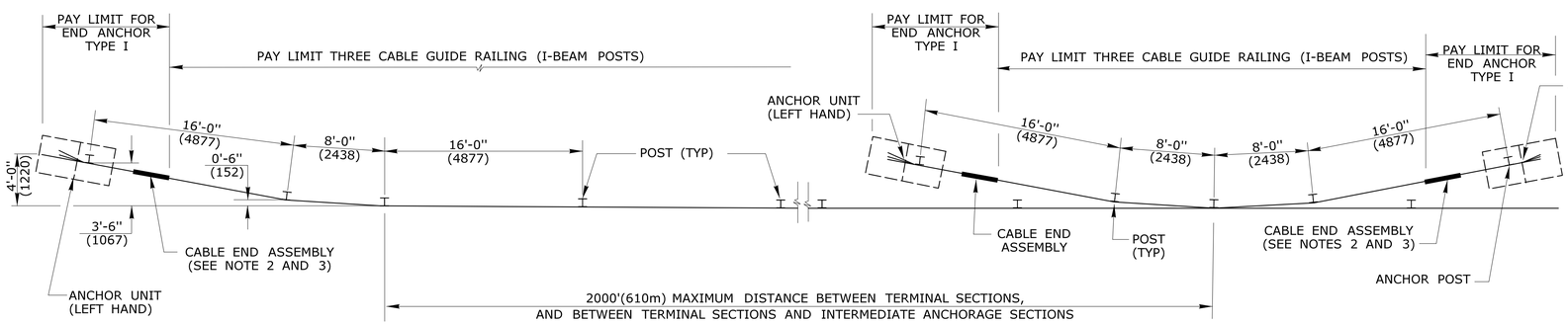

PLAN

TYPICAL APPROACH & TERMINAL SECTIONS

(SHOWING LEFT HAND ANCHOR UNIT)

PLAN

TYPICAL INTERMEDIATE SECTION

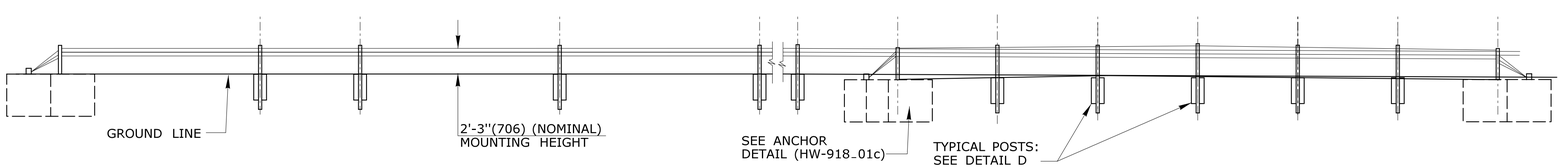

ELEVATION

TYPICAL APPROACH & TERMINAL SECTIONS

(SHOWING LEFT HAND ANCHOR UNIT)

ELEVATION

TYPICAL INTERMEDIATE SECTION

TABLE A	
RADIUS OF CURVE	POST SPACING
R > 720' (219m)	16'(4877)
R ≤ 720' (219m) BUT ≥ 440' (134m)	8'(2438)
R < 440' (134m)	DO NOT INSTALL

TABLE B		
TYPE OF SYSTEM	POST SPACING	DEFLECTION
STANDARD SYSTEM 2	16'(4877) 8'(2438)	12'(3658) 8'(2438)

NOTE: DEFLECTION DISTANCE IS BASED ON IMPACT SPEEDS OF 63mph(101kph).

ALL METRIC DIMENSIONS ARE IN MILLIMETERS (mm) UNLESS OTHERWISE NOTED.

REV.	DATE	REVISION DESCRIPTION
1	1/12	NEW END ANCHOR -
2	7/13	REVISE CABLE SPACE ,HEIGHT, AND CURVATURE POST SPACING
-	-	- -
-	-	- -
-	-	- -
-	-	- -

THE INFORMATION, INCLUDING ESTIMATED QUANTITIES OF WORK, SHOWN ON THESE SHEETS IS BASED ON LIMITED INVESTIGATIONS BY THE STATE AND IS IN NO WAY WARRANTED TO INDICATE THE CONDITIONS OF ACTUAL QUANTITIES OF WORK WHICH WILL BE REQUIRED.

Plotted Date: 7/12/2013

NOT TO SCALE

STATE OF CONNECTICUT
DEPARTMENT OF TRANSPORTATION

Filename: CTDOT_HIGHWAY_STD2013.dgn Model: 76 - HW-918_01a

SUBMITTED BY: NAME/DATE/TIME:

APPROVED BY: NAME/DATE/TIME:

CTDOT STANDARD SHEET

OFFICE OF ENGINEERING

STANDARD SHEET TITLE:

THREE CABLE GUIDERAIL (I-BEAM POSTS) SHEET 1

STANDARD SHEET NO.:

HW-918_01a

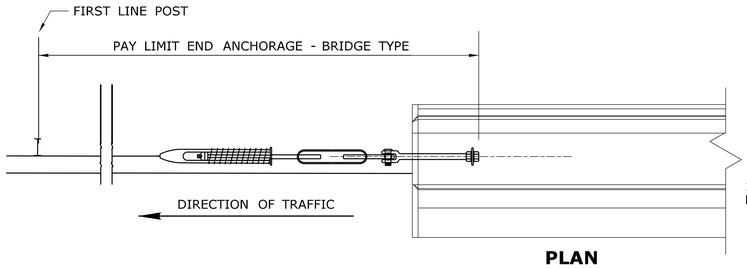

PLAN

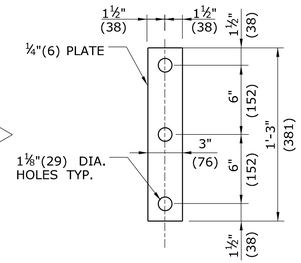

ANCHORAGE PLATE

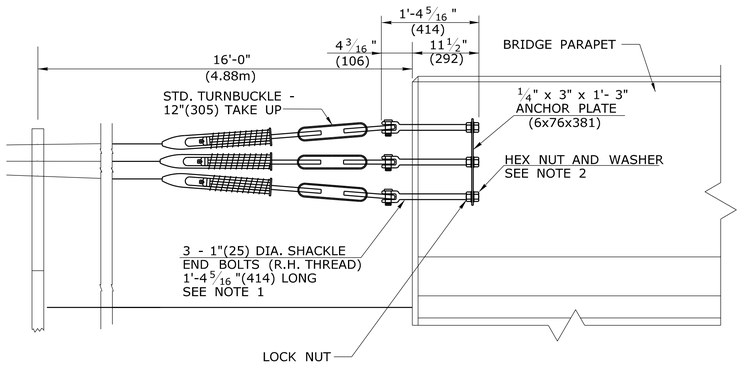

ELEVATION

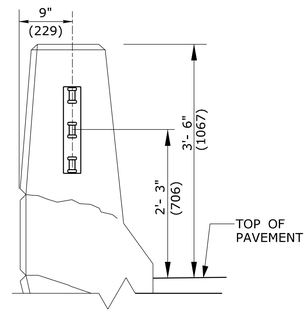

END VIEW

TRAILING END ATTACHMENT TO BRIDGE

(SEE NOTES 1-5)

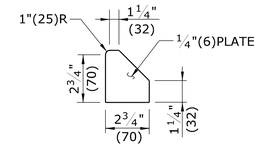

INTERNAL STIFFENER PLATE

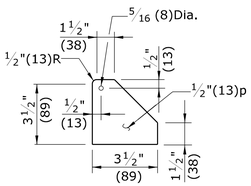

EXTERNAL STIFFENER PLATE

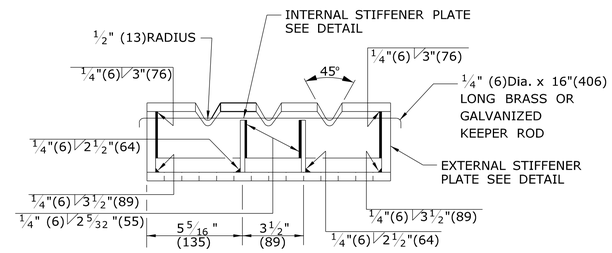

FRONT VIEW

ANCHOR ANGLE DETAIL

GENERAL NOTES:

1. THE SHACKLE END BOLTS SHALL CONFORM TO THE REQUIREMENTS OF ASTM A668 CLASS E OR AISI 1035 FORGED STEEL GALVANIZED IN ACCCORDANCE WITH THE REQUIREMENTS OF ASTM A153.
2. THE STANDARD HEX NUTS, ANCHOR PLATES AND LOCK NUTS SHALL CONFORM TO THE REQUIREMENTS OF ASTM A-36.
3. LONGITUDINAL REINFORCEMENT IN THE PARAPET SHALL CLEAR ANCHOR PLATE.
4. ALL ANCHORAGE MATERIAL SHALL BE PAID FOR AS PART OF THE PAY ITEM "END ANCHORAGE - BRIDGE TYPE" (ROADWAY ITEM).
5. THIS DETAIL SHALL BE USED TO ANCHOR THREE-CABLE GUIDE RAILING AT THE TRAILING END OF 3'-6"(1067) HIGH PARAPETS ON ONE-WAY ROADS ONLY. PARAPET HEIGHTS LOWER THAN THIS SHALL BE REFERED TO STRUCTURE DESIGN UNIT.
6. CABLE ENDS SHALL BE FABRICATED FROM MALLABLE IRON OR CAST STEEL. THE CABLE SPLICE AND WEDGE SHALL BE FABRICATED FROM MALLABLE IRON OR ASTM A536 DUCTILE IRON GRADE 65-45-122.
7. ALL CABLE ENDS AND SPLICES SHALL BE DESIGNED TO USE THE WEDGE SHOWN IN DETAIL G AND SHALL DEVELOP THE FULL STRENGTH OF THE ¾"(19) ROUND CABLE 25,000 LBS (11,340 kg). THE CABLES, ENDS, AND SPLICES SHALL BE HOT DIPPED GALVANIZED AS INDICATED IN THE MATERIAL SPECIFICATIONS FOR CABLE GUIDERAILINGS. DO NOT GALVANIZE THE CABLE WEDGE SHOWN IN DETAIL G.

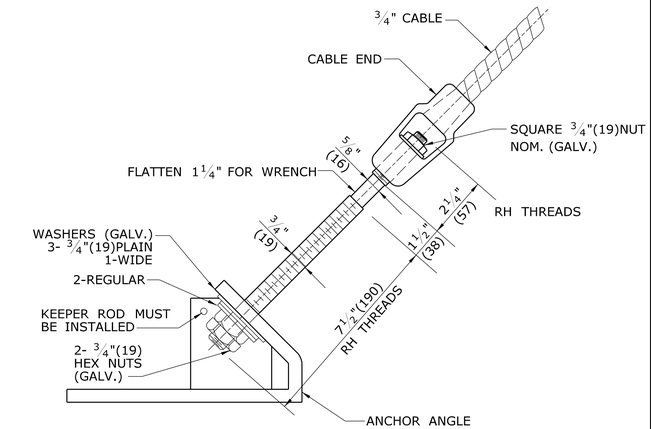

CABLE END ASSEMBLY ROD CONNECTION TO CABLE ANCHOR ANGLE DETAIL

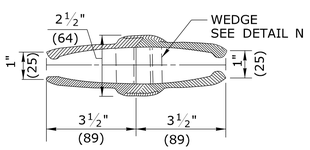

DETAIL E

CABLE SPLICE

USE WITH WEDGE AS SHOWN IN DETAIL N (SEE NOTES 8,9, AND 10).

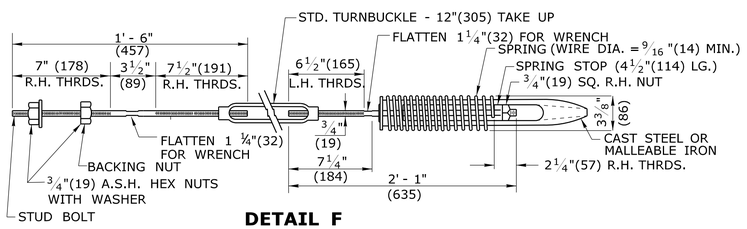

DETAIL F

SPRING CABLE END ASSEMBLY (COMPENSATING DEVICE)

(SEE NOTE 2)

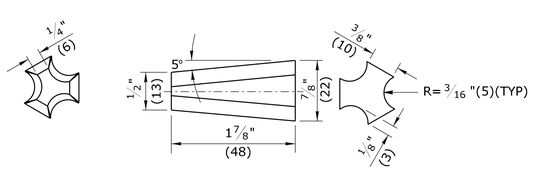

DETAIL G

TYPICAL WEDGE FOR ALL CABLE SPLICES AND CABLE FITTINGS

(DO NOT GALVANIZE)

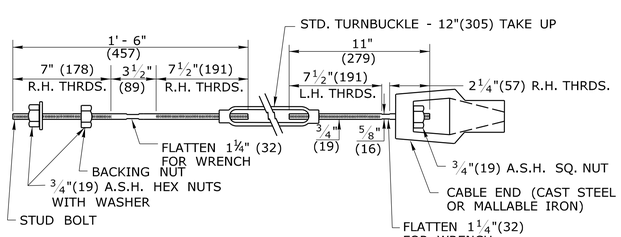

DETAIL H

STEEL TURNBUCKLE CABLE END ASSEMBLY

(SEE NOTE 2)

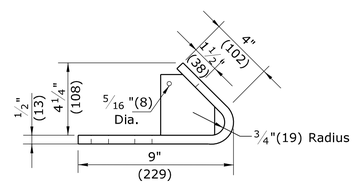

SIDE VIEW

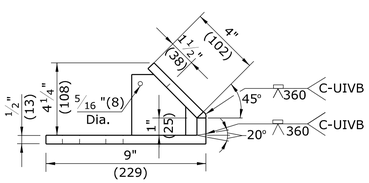

SIDE VIEW

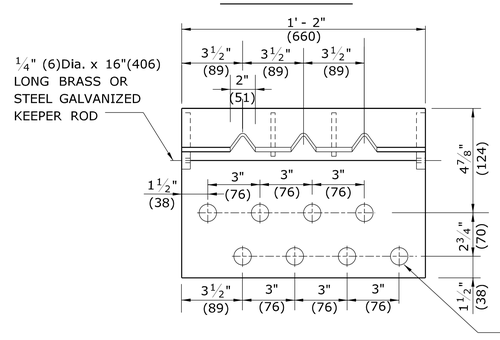

BENT PLATE ANCHOR ANGLE DETAILS

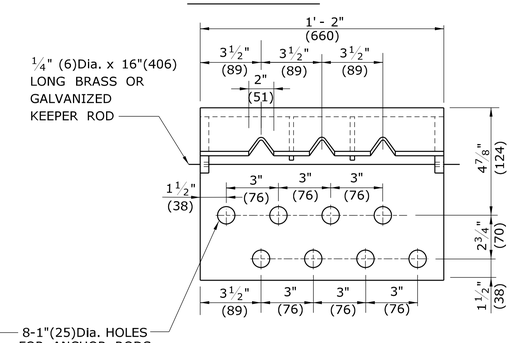

WELDED PLATE ANCHOR ANGLE DETAILS

ALL METRIC DIMENSIONS ARE IN MILLIMETERS (mm) UNLESS OTHERWISE NOTED.

REV.	DATE	REVISION DESCRIPTION
1	1/12	NEW END ANCHOR
-	-	-
-	-	-
-	-	-
-	-	-
-	-	-

THE INFORMATION, INCLUDING ESTIMATED QUANTITIES OF WORK, SHOWN ON THESE SHEETS IS BASED ON LIMITED INVESTIGATIONS BY THE STATE AND IS IN NO WAY WARRANTED TO INDICATE THE CONDITIONS OF ACTUAL QUANTITIES OF WORK WHICH WILL BE REQUIRED.

Plotted Date: 1/9/2012

NOT TO SCALE

STATE OF CONNECTICUT
DEPARTMENT OF TRANSPORTATION

Filename: Jan2012.dgn Model: HW-918_01b

SUBMITTED BY: NAME/DATE/TIME:

APPROVED BY: NAME/DATE/TIME:

CTDOT STANDARD SHEET

OFFICE OF ENGINEERING

STANDARD SHEET TITLE:

THREE CABLE GUIDERAIL (I-BEAM POSTS) SHEET 2

STANDARD SHEET NO.:

HW-918_01b

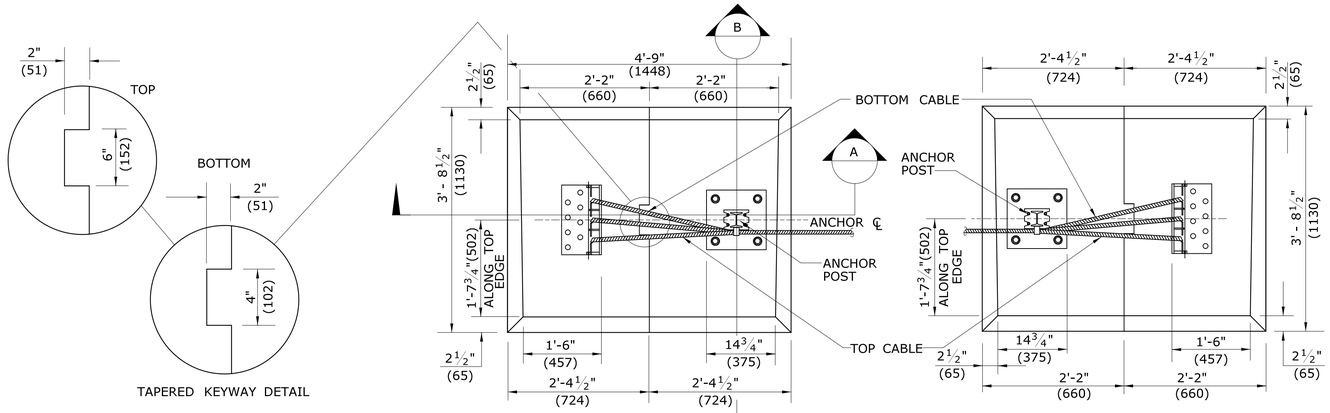

ANCHOR UNIT TOP VIEW LEFT HAND

ANCHOR UNIT TOP VIEW RIGHT HAND

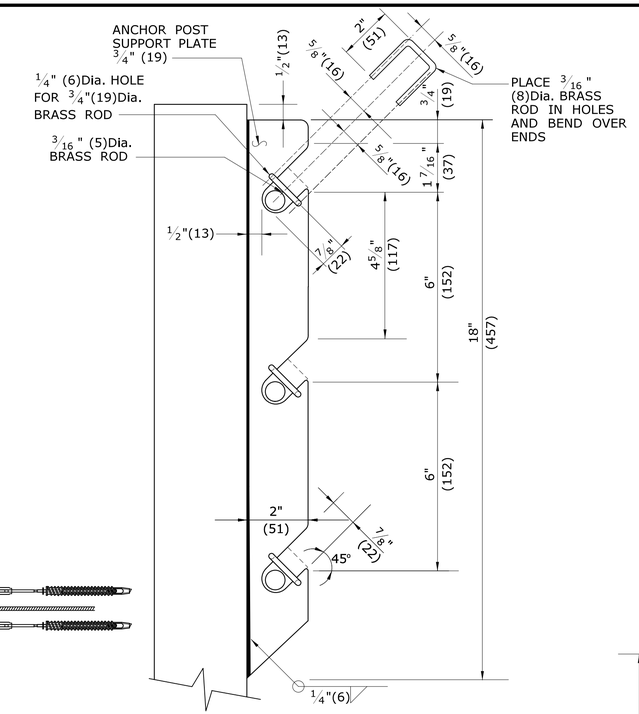

SIDE VIEW OF UPPER ANCHOR POST AT TOP

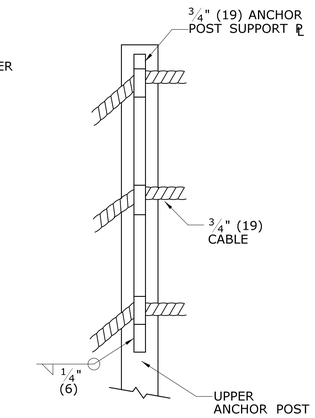

FRONT VIEW OF POST TOP

(ROAD SIDE)

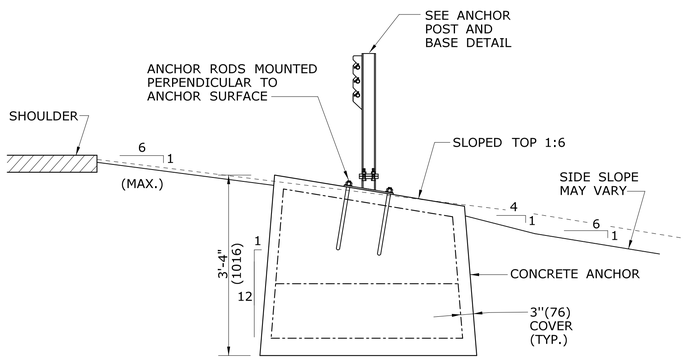

SECTION B

OFFSET AND GRADES FOR INSTALLATION

(LEFT HAND)

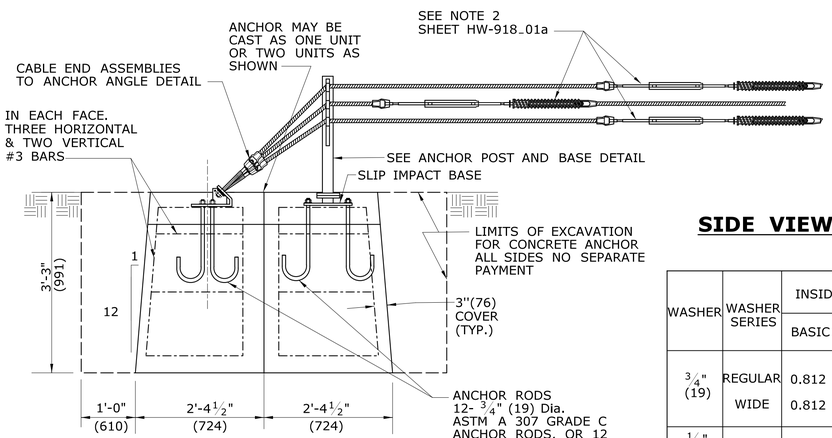

SECTION A

ANCHOR UNIT WITH REINFORCEMENT (TWO PIECE) LEFT HAND

WASHER	WASHER SERIES	INSIDE DIAMETER "A"			OUTSIDE DIAMETER "B"			THICKNESS "C"		
		BASIC	TOLERANCE		BASIC	TOLERANCE		BASIC	MAX.	MIN.
			PLUS	MINUS		PLUS	MINUS			
¾" (19)	REGULAR	0.812	0.030	0.007	1.469	0.030	0.007	0.134	0.160	0.108
	WIDE	0.812	0.030	0.007	2.000	0.030	0.007	0.165	0.192	0.136
½" (13)	NARROW	0.531	0.015	0.005	1.062	0.030	0.007	0.095	0.121	0.074

WASHER TABLE AND WASHER DETAIL

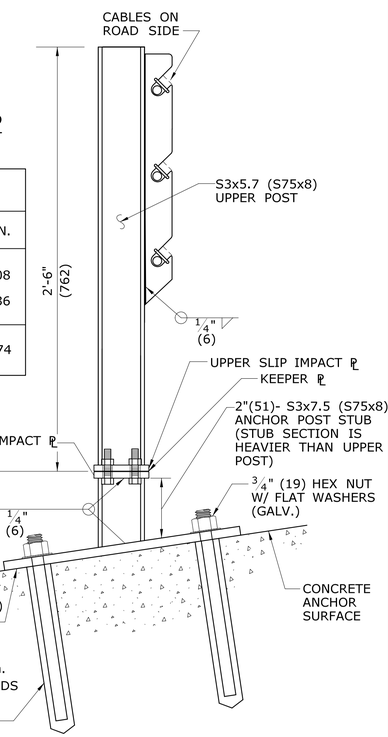

ANCHOR POST AND BASE DETAIL

NOTE: SEE THE ANCHOR UNIT DETAIL FOR TYPICAL INSTALLATION

½" (13)BOLT, 2½"(63)LONG WITH NUT AND (3) WASHERS TORQUE T0 25 LBS./FT. (1) WASHER UNDER HEAD,(1) BETWEEN ℄, (1) UNDER NUT, AN ADDITIONAL 1/16"(2)THICK WASHER MAY BE PLACED BETWEEN ℄ TO PLUMB ANCHOR POST.

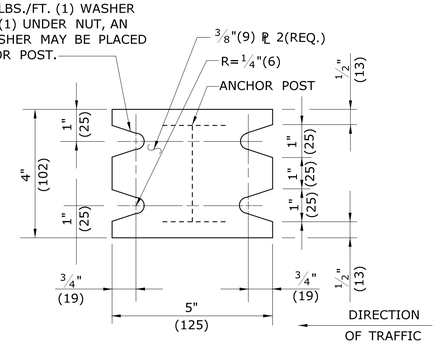

SLIP IMPACT BASE

(KEEPER PLATE NOT SHOWN)

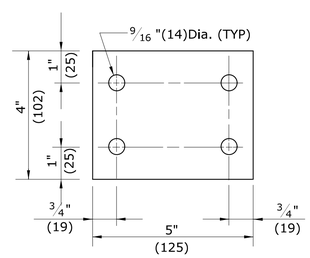

KEEPER PLATE

(28 GA. GALV. STEEL, PAINTED ORANGE)

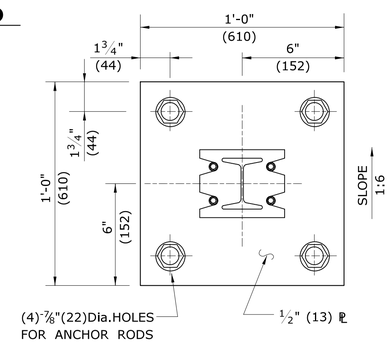

ANCHOR POST AND BASE PLATE

ALL METRIC DIMENSIONS ARE IN MILLIMETERS (mm) UNLESS OTHERWISE NOTED.

REV.	DATE	REVISION DESCRIPTION
1	1/12	NEW END ANCHOR
2	7/13	REVISE CABLE SPACE @ ANCHOR POST
-	-	-
-	-	-
-	-	-
-	-	-

THE INFORMATION, INCLUDING ESTIMATED QUANTITIES OF WORK, SHOWN ON THESE SHEETS IS BASED ON LIMITED INVESTIGATIONS BY THE STATE AND IS IN NO WAY WARRANTED TO INDICATE THE CONDITIONS OF ACTUAL QUANTITIES OF WORK WHICH WILL BE REQUIRED.

Plotted Date: 7/12/2013

NOT TO SCALE

STATE OF CONNECTICUT
DEPARTMENT OF TRANSPORTATION

Filename: CTDOT_HIGHWAY_STD2013.dgn Model: 78 - HW-918_01c

SUBMITTED BY: NAME/DATE/TIME:

APPROVED BY: NAME/DATE/TIME:

CTDOT STANDARD SHEET

OFFICE OF ENGINEERING

STANDARD SHEET TITLE:

THREE CABLE GUIDERAIL (I-BEAM POSTS) SHEET 3

STANDARD SHEET NO.:

HW-918_01c

GENERAL NOTES:

1. DRIVEWAY ENTRANCE SHALL BE A MINIMUM OF 12' (3658) WIDE, EXCLUDING CURBING WHEN PRESENT.
2. SIDEWALK RAMPS SHALL BE A MINIMUM OF 36" (914) TO 40" (1016) MAXIMUM, WITH A MAXIMUM SLOPE OF 12:1. THERE SHALL BE NO LIP AT THE DRIVEWAY SIDEWALK INTERFACE.
3. WELDED WIRE FABRIC MATS WITH REINFORCING AT CLOSER SPACING MAY BE USED.

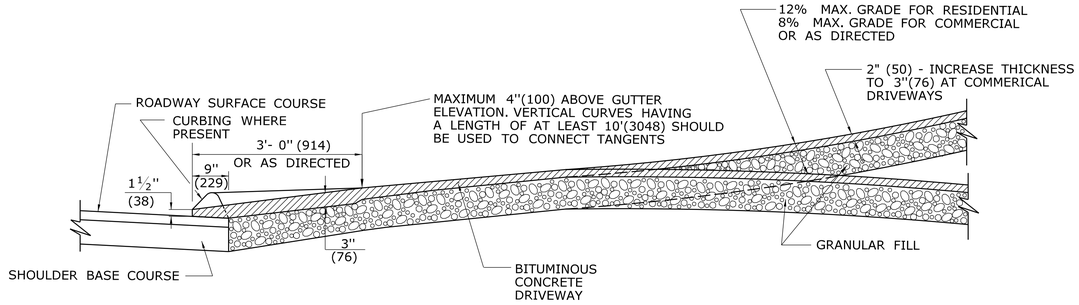

SECTION A

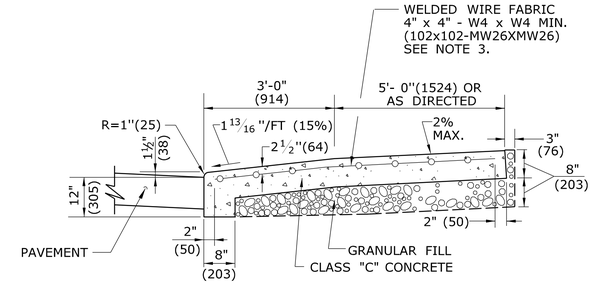

SECTION C

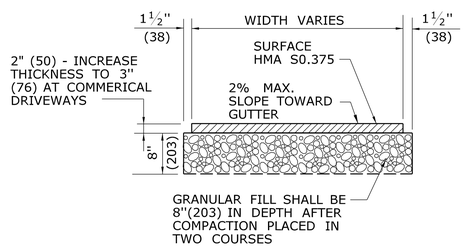

TYPICAL SECTION
BITUMINOUS CONCRETE SIDEWALK AND DRIVE

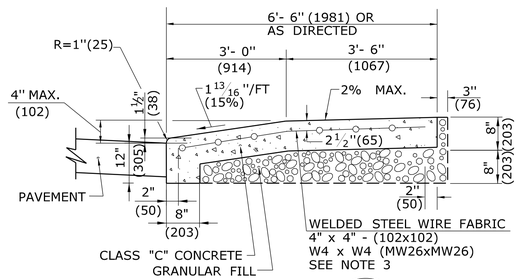

SECTION B

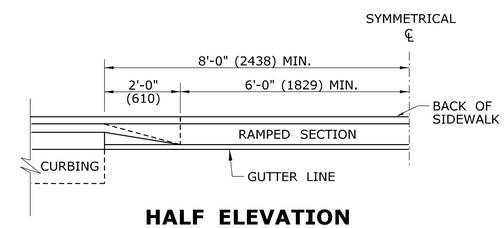

HALF ELEVATION

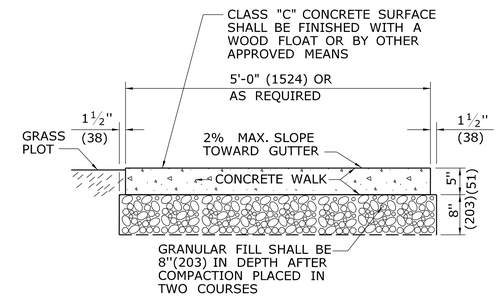

SECTION D

5' (1524) WIDE CONCRETE SIDEWALK WITH GRASS PLOT

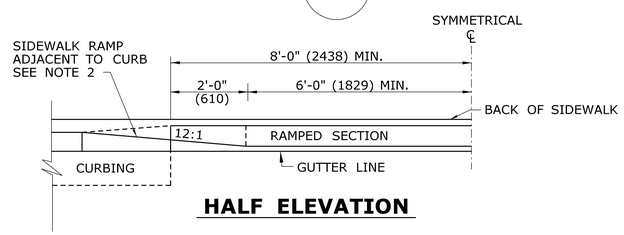

HALF ELEVATION

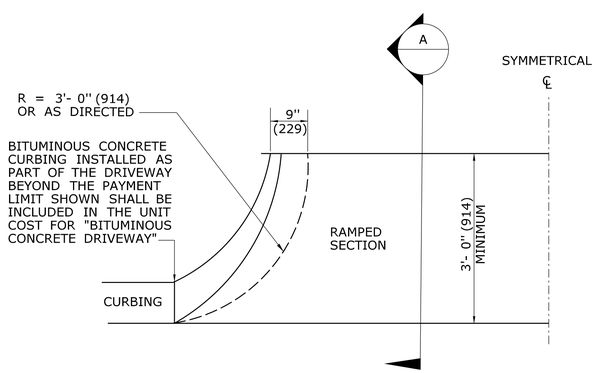

HALF BITUMINOUS CONCRETE DRIVEWAY PLAN

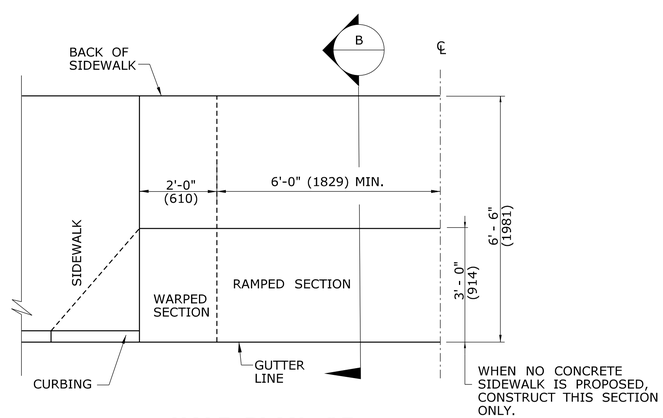

HALF PLAN OF CONCRETE DRIVEWAY RAMP WHERE SIDEWALK ADJOINS CURBING

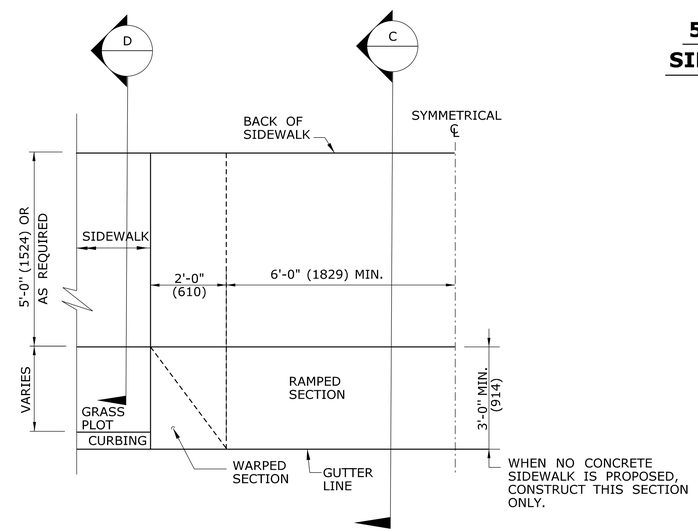

HALF PLAN OF CONCRETE DRIVEWAY RAMP WHERE CURB IS SEPARATED FROM SIDEWALK BY GRASS PLOT

ALL METRIC DIMENSIONS ARE IN MILLIMETERS (mm) UNLESS OTHERWISE NOTED

REV.	DATE	REVISION DESCRIPTION
1	6/01/10	REVISED BORDER TITLE
2	6/01/10	REVISED HALF ELEVATION DETAILS
3	1/12	REVISE 2% MAX. SLOPE NOTE
-	-	-
-	-	-
-	-	-

THE INFORMATION, INCLUDING ESTIMATED QUANTITIES OF WORK, SHOWN ON THESE SHEETS IS BASED ON LIMITED INVESTIGATIONS BY THE STATE AND IS IN NO WAY WARRANTED TO INDICATE THE CONDITIONS OF ACTUAL QUANTITIES OF WORK WHICH WILL BE REQUIRED.

Plotted Date: 1/9/2012

NOT TO SCALE

STATE OF CONNECTICUT
DEPARTMENT OF TRANSPORTATION

Filename: Jan2012.dgn Model: HW-921_01

SUBMITTED BY: NAME/DATE/TIME:

APPROVED BY: NAME/DATE/TIME:

CTDOT STANDARD SHEET

OFFICE OF ENGINEERING

STANDARD SHEET TITLE: DRIVEWAY RAMPS AND SIDEWALKS

STANDARD SHEET NO.: HW-921_01

GENERAL NOTES:

1. PAVEMENT FOR RAILING SHALL BE USED ONLY AT THE FOLLOWING LOCATIONS:
   - A) WITHIN A MAPPED AQUIFER PROTECTION AREA.
   - B) AT THE APPROACHES TO BRIDGES OVER STREAMS AND RIVERS FOR A MINIMUM LENGTH OF 50'(15m).
   - C) WHEN THE RIVER OR STREAM IS LESS THAN 50'(15m) FROM THE EDGE OF ROAD AND PARALLELING IT.
   - D) WITHIN OR ABUTTING WATER COMPANY OWNED AREA.
2. WHEN PAVEMENT FOR RAILING IS NOT REQUIRED, PROCESSED AGGREGATE SHALL BE USED UNDER RAILING. SEE HW-910_02 AND 03.

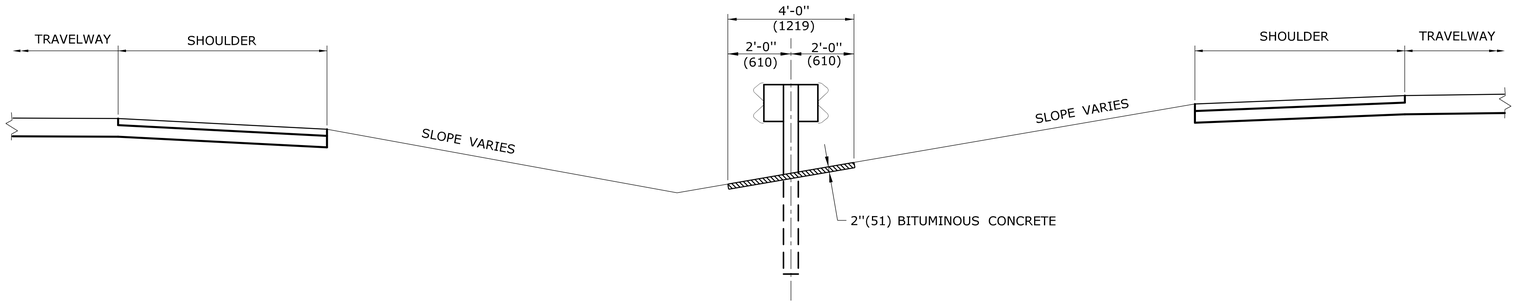

MEDIAN SECTION

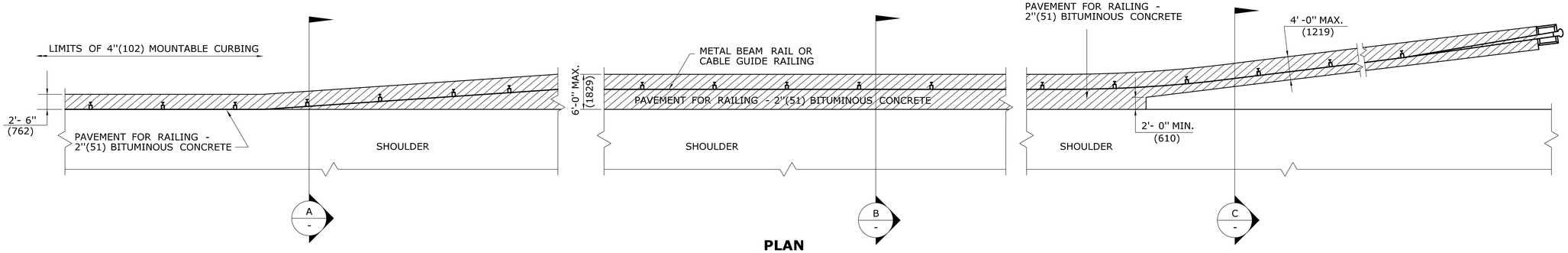

PLAN

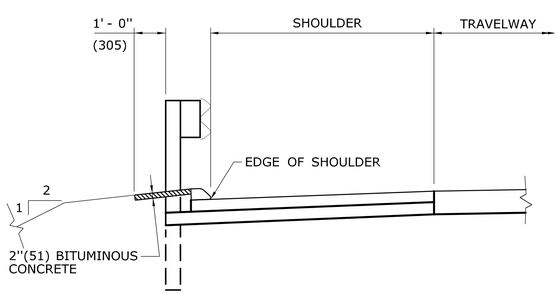

SECTION A -

RAIL WITH 4"(102) MOUNTABLE CURBING

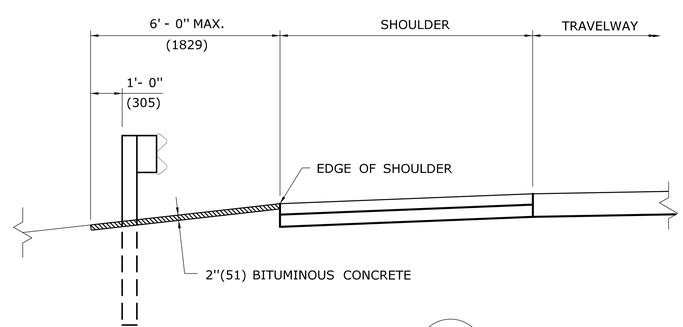

SECTION B -

RAIL WITHOUT CURBING

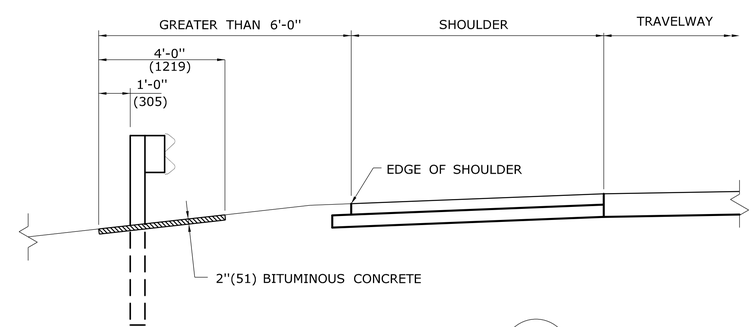

SECTION C -

TRANSITION OR OFFSET RAIL

TYPICAL CROSS SECTIONS

ALL METRIC DIMENSIONS ARE IN MILLIMETERS (mm) UNLESS OTHERWISE NOTED

REV.	DATE	REVISION DESCRIPTION
1	6/11	REVISED NOTES FOR LOCATION TO USE PAVEMENT FOR RAIL
-	-	-
-	-	-
-	-	-
-	-	-
-	-	-

THE INFORMATION, INCLUDING ESTIMATED QUANTITIES OF WORK, SHOWN ON THESE SHEETS IS BASED ON LIMITED INVESTIGATIONS BY THE STATE AND IS IN NO WAY WARRANTED TO INDICATE THE CONDITIONS OF ACTUAL QUANTITIES OF WORK WHICH WILL BE REQUIRED.

Plotted Date: 5/10/2011

NOT TO SCALE

STATE OF CONNECTICUT
DEPARTMENT OF TRANSPORTATION

Filename: CTDOT_HIGHWAY_STD_JUNE2011.dgn Model: 70 - HW-925_01

SUBMITTED BY: NAME/DATE/TIME:

APPROVED BY: NAME/DATE/TIME:

CTDOT
STANDARD SHEET

OFFICE OF ENGINEERING

STANDARD SHEET TITLE:

PAVEMENT FOR RAILING

STANDARD SHEET NO.:

HW-925_01

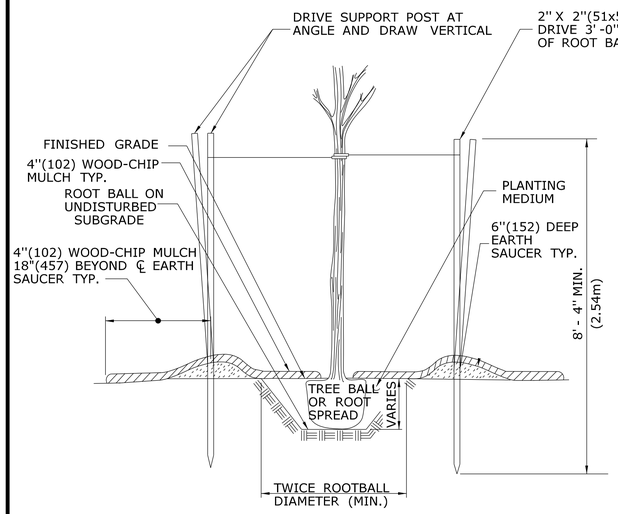

SECTION A

NOTE:

USE 3 POSTS FOR STAKING DECIDUOUS TREES 3"(76) CALIPER OR GREATER AND EVERGREEN TREES 8'(2.4m) HIGH OR GREATER. USE 2 POSTS FOR STAKING DECIDUOUS TREES LESS THAN 3"(76) CALIPER AND EVERGREEN TREES LESS THAN 8'(2.4m) HIGH.

GUYING PLAN

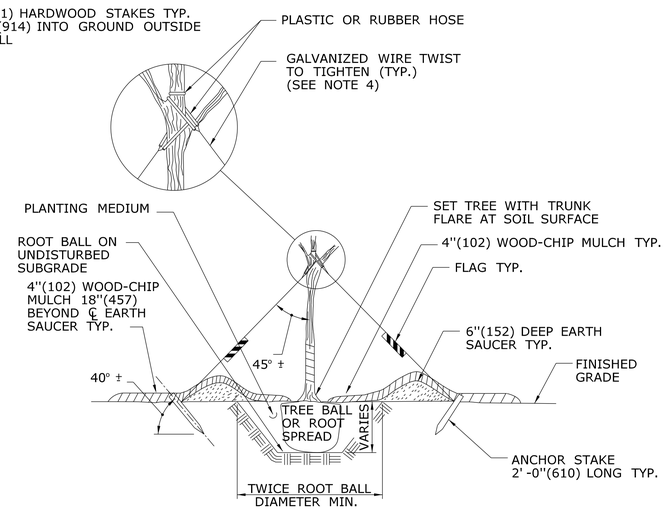

SECTION B

EXAMPLES OF MINIMUM SIZE OF ROOT BALL FOR NURSERY GROWN PLANTS.

CALIPER* INCHES(mm)	BALL DIAMETER INCHES(mm)	PLANTING PIT SIZE INCHES(mm)
-	8(203)	16(406)
-	10(254)	20(508)
½(12.5)	12(304)	24(610)
¾(19)	14(356)	28(711)
1(25)	16(406)	32(813)
1½(38)	20(508)	40(1016)
2(50)	24(610)	48(1219)
2½(65)	28(711)	56(1422)
3(75)	32(813)	64(1626)
3½(90)	38(965)	76(1930)
4(100)	42(1166)	84(2134)
5(125)	54(1372)	108(2743)
6(150)**	-	-

* THE CALIPER OF THE TRUNK IS MEASURED 6"(152) ABOVE THE GROUND UP TO AND INCLUDING 4"(102) SIZES AND 12"(305) ABOVE THE GROUND FOR LARGER SIZES OR AS SPECIFED IN THE MOST RECENT EDITION OF THE AMERICAN STANDARD FOR NURSERY STOCK, PUBLISHED BY THE AMERICAN ASSOCIATION OF NURSERYMEN.

** TREES GREATER THAN OR EQUAL TO 6"(152) CALIPER SHALL HAVE A ROOT BALL DIAMETER EQUAL TO 10"(254) PER INCH(25mm) OF TRUNK CALIPER (A 7"(178) CALIPER TREE SHOULD HAVE A ROOT BALL DIAMETER EQUAL TO 70"(1778)).

GENERAL NOTES:

1. THE PLANTING PIT SIZE SHALL BE TWICE THE DIAMETER OF THE ROOT BALL IN WIDTH AND 2"(51) LESS THAN THE HEIGHT OF THE ROOT BALL.
2. ALL EXTERIOR PACKAGING MATERIAL APPLIED TO PLANTS SHALL BE REMOVED AFTER THE PLANT IS LOCATED IN THE PLANTING PIT. CUT AND REMOVE TWINE, BURLAP OR WIRE BASKETS FROM THE TOP 2/3RDS OF THE ROOT BALL.
3. USE DOUBLE STRAND NO. 12 WIRE FOR DECIDUOUS TREES GREATER THAN OR EQUAL TO 3"(76) CALIPER AND USE DOUBLE STRAND NO. 10 WIRE FOR EVERGREEN TREES GREATER THAN OR EQUAL TO 8"(203) CALIPER.
4. TREE TRUNK WRAPPING MATERIAL SHALL BE USED AS DIRECTED BY THE ENGINEER.
5. PLANTING PITS FOR INDIVIDUAL SHRUBS ON SLOPES SHALL BE THREE TIMES THE DIAMETER OF THE ROOT BALL IN WIDTH.

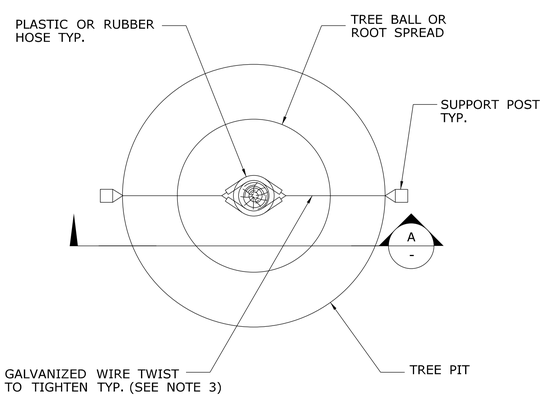

PLAN

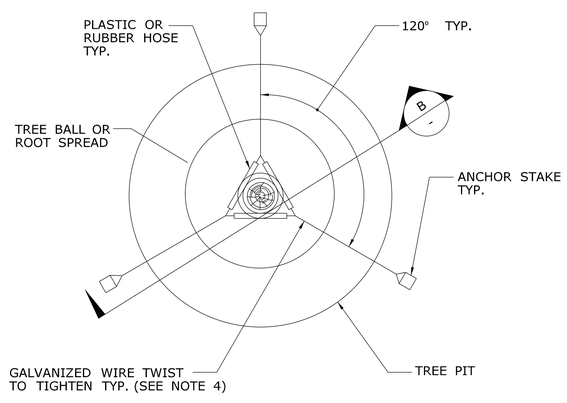

PLAN

STAKING PLAN

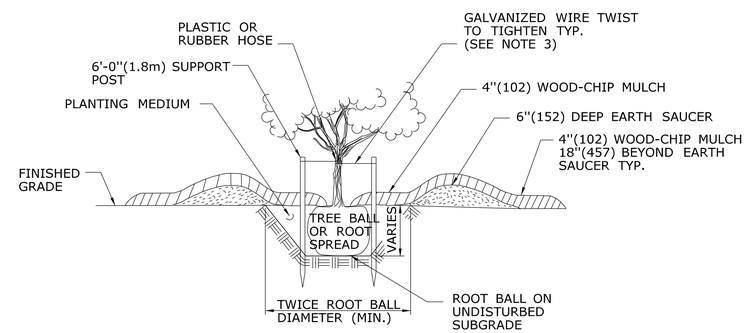

SECTION C

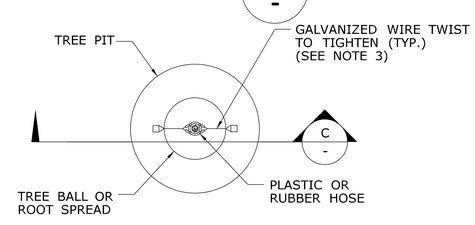

PLAN

STAKING PLAN FOR LOW BRANCHING DECIDUOUS AND EVERGREEN TREES FROM 5'(1.5m) TO 8'(2.4m) HIGH.

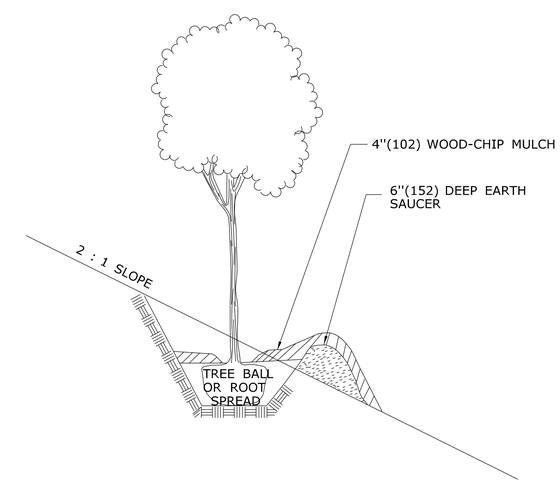

GRADING PLAN FOR TREES ON SLOPES

ALL METRIC DIMENSIONS ARE IN MILLIMETERS (mm) UNLESS OTHERWISE NOTED

REV.	DATE	REVISION DESCRIPTION
-	-	-
-	-	-
-	-	-
-	-	-
-	-	-
-	-	-

THE INFORMATION, INCLUDING ESTIMATED QUANTITIES OF WORK, SHOWN ON THESE SHEETS IS BASED ON LIMITED INVESTIGATIONS BY THE STATE AND IS IN NO WAY WARRANTED TO INDICATE THE CONDITIONS OF ACTUAL QUANTITIES OF WORK WHICH WILL BE REQUIRED.

Plotted Date: 6/23/2011

NOT TO SCALE

STATE OF CONNECTICUT
DEPARTMENT OF TRANSPORTATION

Filename: CTDOT_HIGHWAY_STD_JUNE2011.dgn Model: 71 - HW-949_01

SUBMITTED BY: NAME/DATE/TIME:

APPROVED BY: NAME/DATE/TIME:

CTDOT STANDARD SHEET

OFFICE OF ENGINEERING

STANDARD SHEET TITLE:

PLANTING DETAILS FOR TREES

STANDARD SHEET NO.:

HW-949_01

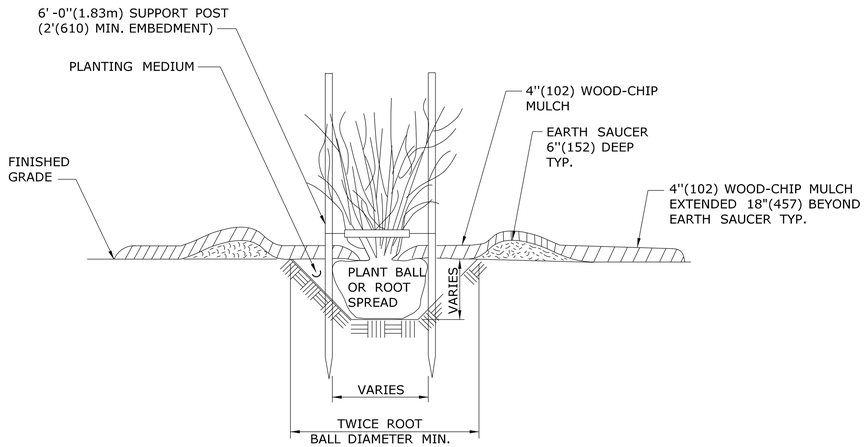

SECTION A -

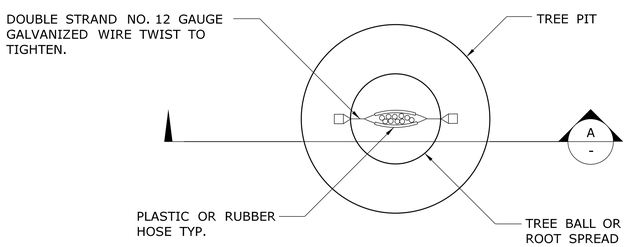

PLAN

STAKING FOR MULTI-STEMMED DECIDUOUS TREES FROM 5'(1.5m) TO 10'(3.0m) HIGH

EXAMPLES OF MINIMUM CONTAINER SIZES FOR NURSERY GROWN PLANTS

CALIPER* INCHES(mm)	HEIGHT** FEET(mm)	CONTAINER SIZE GALLONS(LITERS)
-	1(305)	0.7-1.1(2.6-4.2)
-	2(610)	0.7-1.1(2.6-4.2)
-	3(914)	0.7-1.1(2.6-4.2)
-	4(1219)	1.4-2.0(5.3-7.6)
-	5(1524)	3.4-4.2(12.9-15.9)
-	6(1829)	4.7-5.4(17.8-20.4)
1(25)	7(2134)	5.8-7.8(21.9-29.5)
-	8(2438)	9.0-11.5*34.1-43.5)
1½(38)	-	12.0-16.0(45.4-60.6)
2(51)	-	25.0-29.7(94.6-112.4)
2½(64)	-	25.0-29.7(94.6-112.4)

* THE CALIPER IS MEASURED 4''(102) ABOVE GROUND LEVEL.

** ONLY DECIDUOUS SHRUBS ARE INCLUDED IN THIS TABLE. EVERGREEN SHRUBS ARE MEASURED BY HEIGHT BUT, CONTAINER SIZE DEPENDS ON BOTH SIZE AND SHAPE AND ARE GENERALLY 1 TO 2 SIZES LARGER THAN DECIDUOUS PLANTS.

TABLE FOR SHRUBS

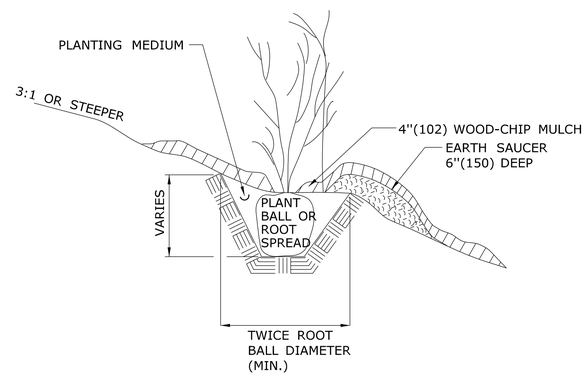

SECTION

PLANTING FOR SHRUBS IN INDIVIDUAL PITS ON SLOPES

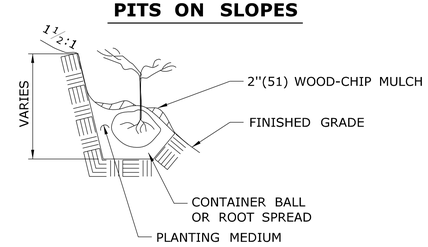

NOTE: PLACE PLANTS AT THE SAME DEPTH THAT THE SEEDLING WAS GROWN IN THE NURSERY.

PLANTING FOR SEEDLINGS, VINES AND GROUND COVER PLANTS IN PITS ON SLOPES

GENERAL NOTES:

1. THE PLANTING PIT SIZE SHALL BE TWICE THE DIAMETER OF THE ROOT BALL IN WIDTH AND 2''(51) LESS THAN THE HEIGHT OF THE ROOT BALL.
2. ALL EXTERIOR PACKAGING MATERIAL APPLIED TO PLANTS SHALL BE REMOVED AFTER THE PLANT IS LOCATED IN THE PLANTING PIT. CUT AND REMOVE TWINE, BURLAP OR WIRE BASKETS FROM THE TOP 2/3RDS (17) OF THE ROOT BALL.
3. USE DOUBLE STRAND NO. 12 WIRE FOR DECIDUOUS TREES GREATER THAN OR EQUAL TO 3''(76) CALIPER AND USE DOUBLE STRAND NO. 10 WIRE FOR EVERGREEN TREES GREATER THAN OR EQUAL TO 8''(203) CALIPER.
4. TREE TRUNK WRAPPING MATERIAL SHALL BE USED AS DIRECTED BY THE ENGINEER.
5. PLANTING PITS FOR INDIVIDUAL SHRUBS ON SLOPES SHALL BE THREE TIMES THE DIAMETER OF THE ROOT BALL IN WIDTH.

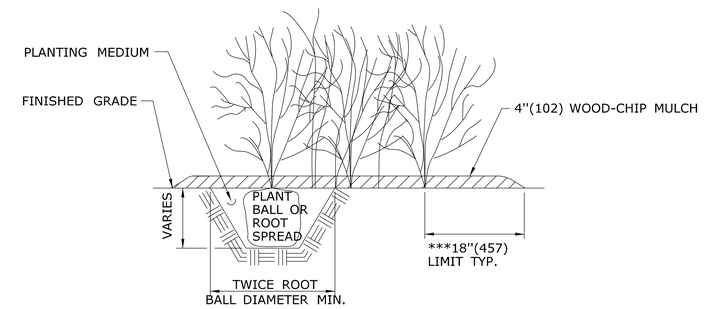

*** UNLESS OTHERWISE DIRECTED, WOOD-CHIP MULCH SHALL BE PLACED TO A LIMIT OF 18''(457) BEYOND THE CENTER OF THE OUTERMOST SHRUBS IN SHRUB BED.

PLANTING FOR SHRUBS IN BEDS

ALL METRIC DIMENSIONS ARE IN MILLIMETERS (mm) UNLESS OTHERWISE NOTED

REV.	DATE	REVISION DESCRIPTION
-	-	-
-	-	-
-	-	-
-	-	-
-	-	-
-	-	-

THE INFORMATION, INCLUDING ESTIMATED QUANTITIES OF WORK, SHOWN ON THESE SHEETS IS BASED ON LIMITED INVESTIGATIONS BY THE STATE AND IS IN NO WAY WARRANTED TO INDICATE THE CONDITIONS OF ACTUAL QUANTITIES OF WORK WHICH WILL BE REQUIRED.

Plotted Date: 6/23/2011

NOT TO SCALE

STATE OF CONNECTICUT
DEPARTMENT OF TRANSPORTATION

Filename: CTDOT_HIGHWAY_STD_JUNE2011.dgn Model: 72 -HW-949_02

SUBMITTED BY: NAME/DATE/TIME:

APPROVED BY: NAME/DATE/TIME:

CTDOT STANDARD SHEET

OFFICE OF ENGINEERING

STANDARD SHEET TITLE:

PLANTING DETAILS FOR SHRUBS

STANDARD SHEET NO.:

HW-949_02

GENERAL NOTES:

1. THIS GRADING PLAN APPLIES TO THE LATEST VERSION OF DEPARTMENT APPROVED PROPRIETARY IMPACT ATTENUATION SYSTEM FLARED TYPES CHOSEN FROM THE DEPARTMENT'S QUALIFIED PRODUCTS LIST.
2. A MINIMUM AREA OF 75' (22.9m) LONG BY THE DESIGNATED CLEAR ZONE WIDTH IMMEDIATELY BEHIND AND BEYOND THE TERMINAL SHOULD BE FREE OF FIXED OBJECTS.
3. SEE CONSTRUCTION PLANS FOR APPROPRIATE OFFSET FOR NOSE OF SYSTEM. THE FLARE IS BASED ON THE OFFSET DESIGNATED ON THE PLANS.
4. WHEN A DRIVEWAY OR INTERSECTING ROAD IS WITHIN 5' OF THE SYSTEM, AND CURB EXISTS REMOVE CURBING UP TO POST 3. REDIRECTION BEGINS AT POST 3.
5. IF A UTILITY POLE OR FIXED OBJECT EXISTS NEAR END OF SYSTEM, THE SYSTEM SHALL BE INSTALLED SUCH THAT THE POINT OF REDIRECTION OCCURS PRIOR TO UTILITY POLE OR OBJECT. IN ADDITION, THE DEFLECTION DISTANCE NOTED IS 4'-3" FOR STANDARD W-BEAM STRONG POST GUIDERAIL INSTALLED @ A 6'-3" POST SPACING AND SHALL BE MAINTAINED. A CLEAR RUN-OUT LENGTH BEHIND THE SYSTEM FREE OF FIXED OBJECTS IS ESSENTIAL TO PROPER FUNCTIONING OF A PROPRIETARY GATING IMPACT ATTENUATION SYSTEM AND SHOULD BE STRIVED FOR.

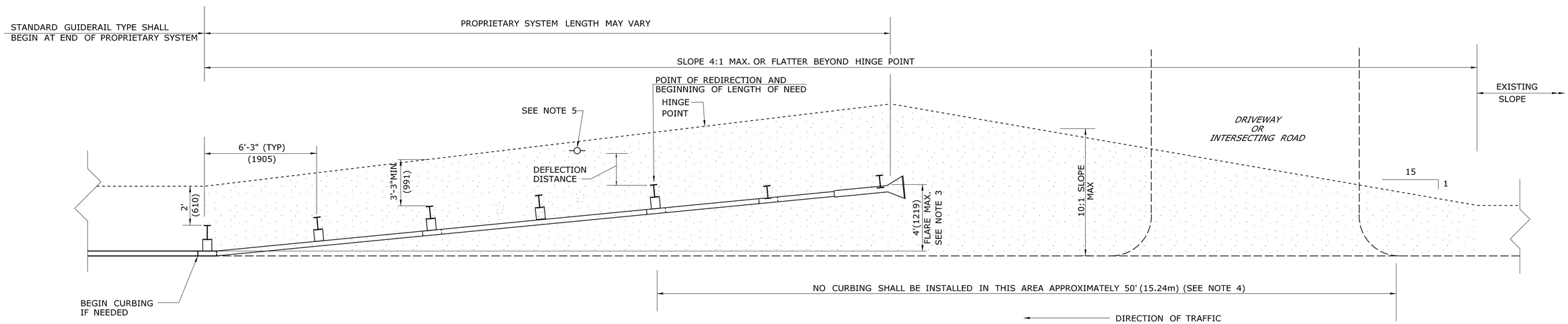

PLAN VIEW FLARE

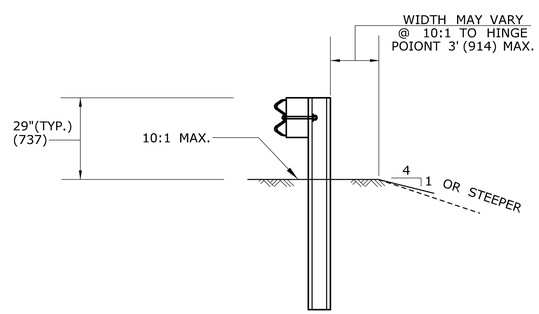

TYPICAL SECTION

ALL METRIC DIMENSIONS ARE IN MILLIMETERS (mm) UNLESS OTHERWISE NOTED.

REV.	DATE	REVISION DESCRIPTION
1	6/11	REVISED LAYOUT W/LENGTH OF NEED
-	-	REVISE NOTE 2 AND ADD NOTE 5. -
-	-	- -
-	-	- -
-	-	- -
-	-	- -

THE INFORMATION, INCLUDING ESTIMATED QUANTITIES OF WORK, SHOWN ON THESE SHEETS IS BASED ON LIMITED INVESTIGATIONS BY THE STATE AND IS IN NO WAY WARRANTED TO INDICATE THE CONDITIONS OF ACTUAL QUANTITIES OF WORK WHICH WILL BE REQUIRED.

Plotted Date: 6/20/2011

NOT TO SCALE

STATE OF CONNECTICUT
DEPARTMENT OF TRANSPORTATION

Filename: CTDOT_HIGHWAY_STD_JUNE2011.dgn Model: 73 - HW-1800_01

SUBMITTED BY: NAME/DATE/TIME:

APPROVED BY: NAME/DATE/TIME:

CTDOT STANDARD SHEET

OFFICE OF ENGINEERING

STANDARD SHEET TITLE:

GRADING PLAN FOR TYPE B IMPACT ATTENUATION SYSTEM (FLARED)

STANDARD SHEET NO.:

HW-1800_01

GENERAL NOTES:

1. THIS GRADING PLAN APPLIES TO THE LATEST VERSION OF DEPARTMENT APPROVED PROPRIETARY IMPACT ATTENUATION SYSTEM MEDIAN/GORE TYPES CHOSEN FROM THE DEPARTMENT'S QUALILFIED PRODUCTS LIST.
2. WHEN THE DISTANCE FROM THE EDGE OF ROADWAY IS BETWEEN 0 AND 11.5'(3.51m) ON ONE OR BOTH SIDES OF THE SYSTEM, THE SLOPE SHALL NOT BE GREATER THAN 10:1 FOR THE ENTIRE LENGTH INCLUDING GORE OR NOSE OF ISLAND IN THE FRONT OF THE SYSTEM. IF THE SYSTEM IS A BRAKE MASTER, THE DISTANCE FROM THE EDGE OF TRAVEL WAY TO THE CENTER LINE OF THE SYSTEM ON BOTH SIDES MUST BE A MINIMUM OF 10'(3.05m).
3. WHEN THE DISTANCE FROM THE EDGE OF THE ROADWAY IS GREATER THAN 11.5'(3.51m) ON ONE OR BOTH SIDES OF THE SYSTEM, THE SLOPE SHALL NOT BE GREATER THAN 6:1 FOR THE ENTIRE LENGTH.
4. CATCH BASIN AT THIS LOCATION IF NEEDED, MUST HAVE A TYPE "C-L" TOP.
5. RAIL ON LEFT SIDE OF RAMP MAY NOT ALWAYS BE REQUIRED. IF NEEDED ON THE RAMP, IT SHOULD BE A 50'(15.24m) RADIUS OR GREATER.
6. WORK WILL BE MEASURED AND PAID FOR AT CONTRACT UNIT PRICES FOR THE VARIOUS ITEMS INVOLVED.
7. DELINEATE THE NOSE OF THE TERMINAL WITH A TYPE III RETROFLECTIVE SHEETING IN CONFORMANCE WITH SECTION M18.09 OR AS PROVIDED BY THE MANUFACTURER.

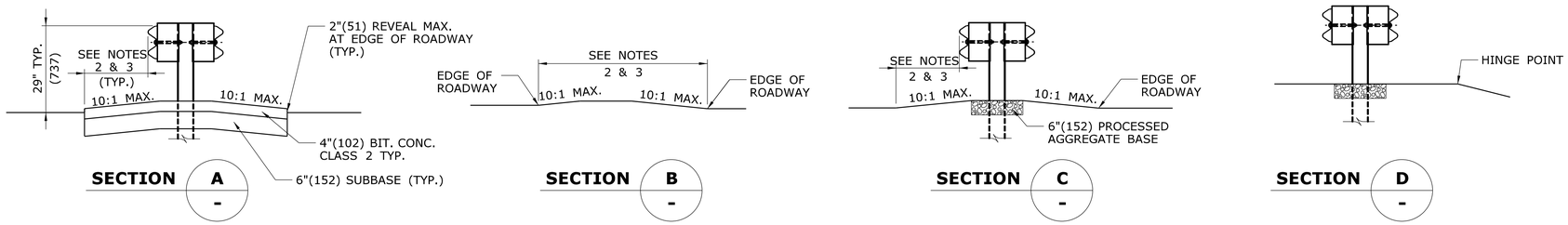

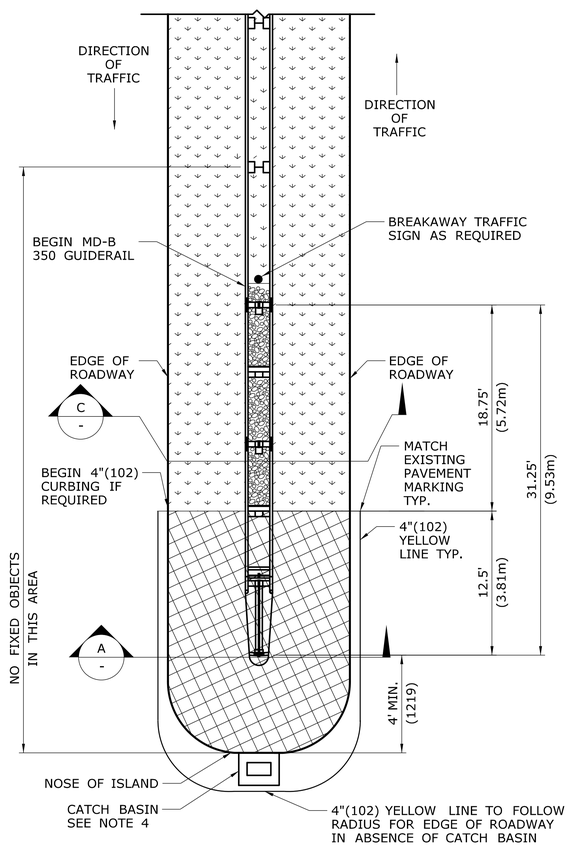

MEDIAN ISLAND APPLICATION

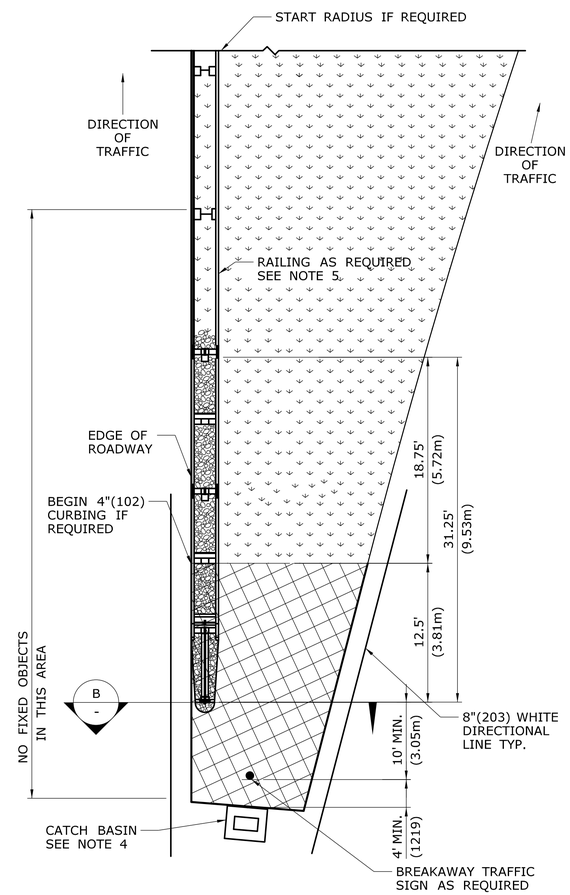

GORE APPLICATION

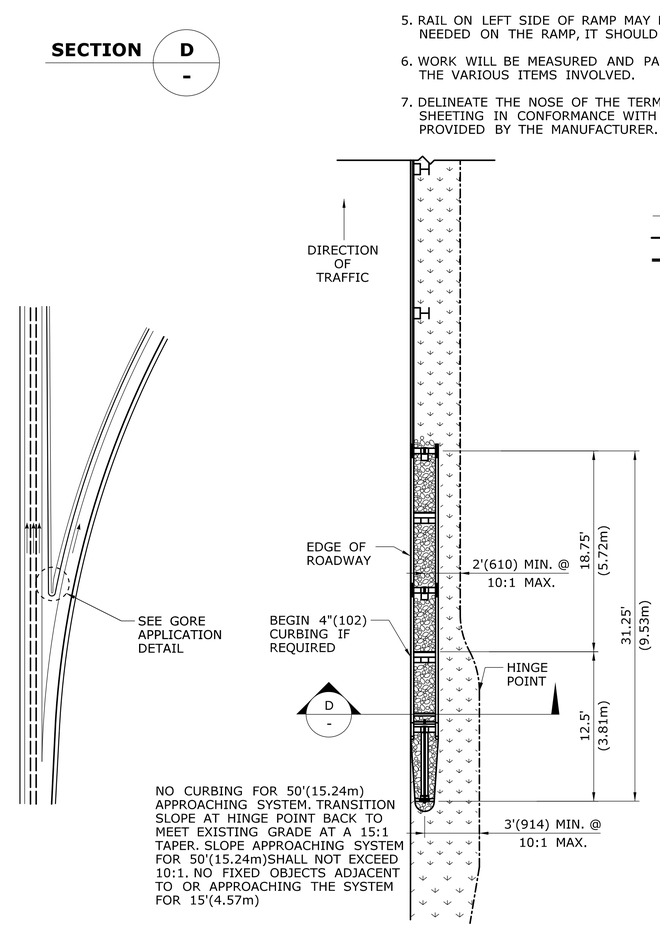

SHOULDER APPLICATION

LEGEND

- NO CURBING
- 2"(51) REVEAL MAX.
- 4"(102) CURBING MAX.
- TURF ESTABLISHMENT
- PROCESSED AGGREGATE WELL COMPACTED
- PAVEMENT

ALL METRIC DIMENSIONS ARE IN MILLIMETERS (mm) UNLESS OTHERWISE NOTED.

REV.	DATE	REVISION DESCRIPTION
1	6/11	REVISED NOTE 1 FOR LATEST VERSION AND RAIL HEIGHT
-	-	-
-	-	-
-	-	-
-	-	-
-	-	-

THE INFORMATION, INCLUDING ESTIMATED QUANTITIES OF WORK, SHOWN ON THESE SHEETS IS BASED ON LIMITED INVESTIGATIONS BY THE STATE AND IS IN NO WAY WARRANTED TO INDICATE THE CONDITIONS OF ACTUAL QUANTITIES OF WORK WHICH WILL BE REQUIRED.

Plotted Date: 5/14/2011

NOT TO SCALE

STATE OF CONNECTICUT
DEPARTMENT OF TRANSPORTATION

Filename: CTDOT_HIGHWAY_STD_JUNE2011.dgn Model: 73 - HW-1800_02

SUBMITTED BY: NAME/DATE/TIME:

APPROVED BY: NAME/DATE/TIME:

CTDOT
STANDARD SHEET

OFFICE OF ENGINEERING

STANDARD SHEET TITLE:

GRADING PLAN FOR TYPE B IMPACT ATTENUATION SYSTEM (MEDIAN/GORE)

STANDARD SHEET NO.:

HW-1800_02

GENERAL NOTES:

1. THIS GRADING PLAN APPLIES TO THE LATEST VERSION OF DEPARTMENT APPROVED PROPRIETARY IMPACT ATTENUATION SYSTEM TANGENTIAL TYPES CHOSEN FROM THE DEPARTMENT'S QUALIFIED PRODUCTS LIST.
2. A MINIMUM AREA OF 75'(22.86m) LONG BY THE DESIGNATED CLEAR ZONE WIDTH IMMEDIATELY BEHIND AND BEYOND THE TERMINAL SHOULD BE FREE OF FIXED OBJECTS.
3. THE TERMINAL NOSE SHALL BE OFFSET FROM THE EDGE OF ROADWAY 1'(305) USING A 50:1 TAPER STARTING AT POST 9. REFER TO MANUFACTURER'S DETAILS FOR PROPER CONSTRUCTION OF SYSTEM.
4. WHEN A DRIVEWAY OR INTERSECTING ROAD IS WITHIN 5' OF THE SYSTEM, AND CURB EXISTS REMOVE CURBING UPTO POST 3. REDIRECTION BEGINS AT POST 3.
5. IF A UTILITY POLE OR FIXED OBJECT EXISTS NEAR END OF SYSTEM, THE SYSTEM SHALL BE INSTALLED SUCH THAT THE POINT OF REDIRECTION OCCURS PRIOR TO THE UTILITY POLE OR OBJECT. IN ADDITION, THE DEFLECTION DISTANCE NOTED IS 4'-3" FOR STANDARD W-BEAM STRONG POST GUIDERAIL INSTALLED @ A 6'-3" POST SPACING AND SHALL BE MAINTAINED. A CLEAR RUN-OUT LENGTH BEHIND THE SYSTEM FREE OF FIXED OBJECTS IS ESSENTIAL TO PROPER FUNCTIONING OF A PROPRIETARY GATING IMPACT ATTENUATION SYSTEM AND SHOULD BE STRIVED FOR.

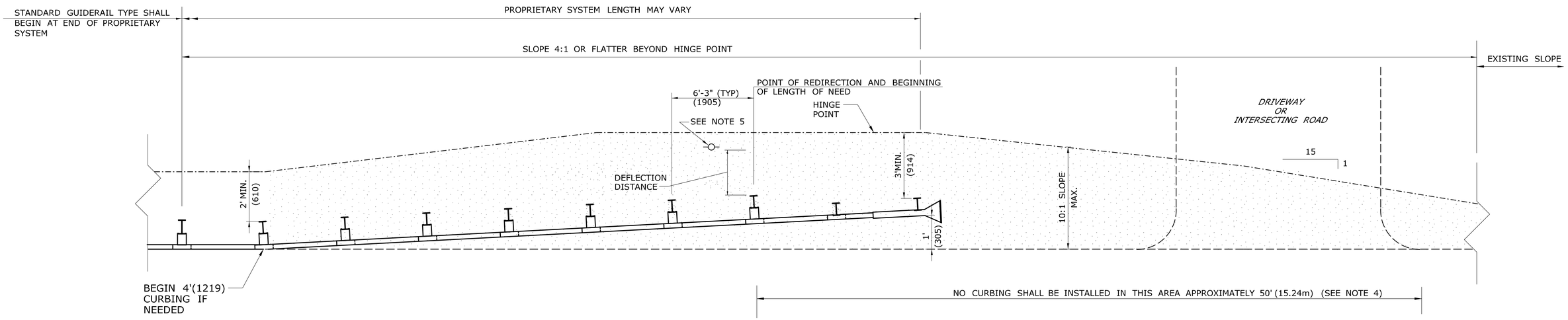

DIRECTION OF TRAFFIC

PLAN

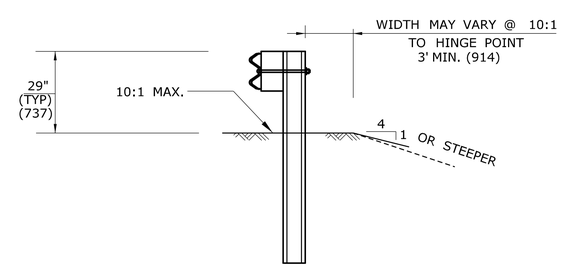

TYPICAL SECTION

ALL METRIC DIMENSIONS ARE IN MILLIMETERS (mm) UNLESS OTHERWISE NOTED.

REV.	DATE	REVISION DESCRIPTION
1	6/11	REVISED LAYOUT W/LENGTH OF NEED. REVISE NOTE 1 AND 2.
-	-	REVISE NOTE 2 AND ADD NOTE 5.
-	-	-
-	-	-
-	-	-
-	-	-

THE INFORMATION, INCLUDING ESTIMATED QUANTITIES OF WORK, SHOWN ON THESE SHEETS IS BASED ON LIMITED INVESTIGATIONS BY THE STATE AND IS IN NO WAY WARRANTED TO INDICATE THE CONDITIONS OF ACTUAL QUANTITIES OF WORK WHICH WILL BE REQUIRED.

Plotted Date: 6/20/2011

NOT TO SCALE

STATE OF CONNECTICUT
DEPARTMENT OF TRANSPORTATION

Filename: CTDOT_HIGHWAY_STD_JUNE2011.dgn Model: 75 - HW-1800_03

SUBMITTED BY: NAME/DATE/TIME:

APPROVED BY: NAME/DATE/TIME:

CTDOT STANDARD SHEET

OFFICE OF ENGINEERING

STANDARD SHEET TITLE:

GRADING PLAN FOR TYPE B IMPACT ATTENUATION SYSTEM (TANGENTIAL)

STANDARD SHEET NO.:

HW-1800_03

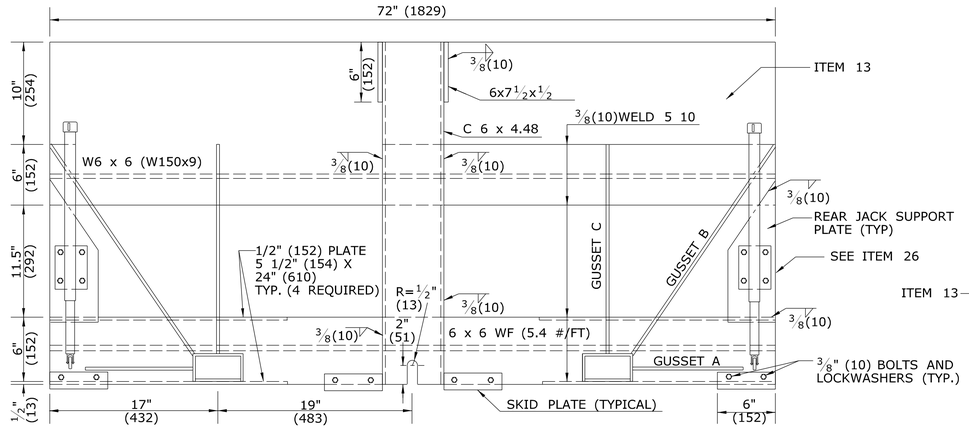

FRONT VIEW

SECTION A

ALL COMPONENTS TO BE 6061-T6 ALLUMINUM
USE COMPATIBLE ALLOY IN WELDING MATERIAL

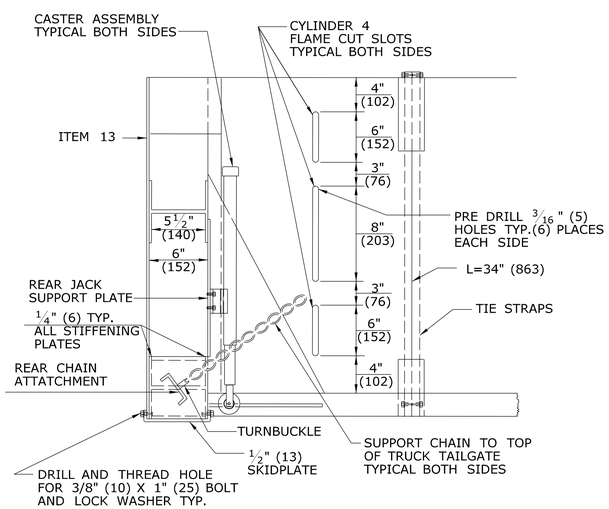

REAR ASSEMBLY SIDE VIEW

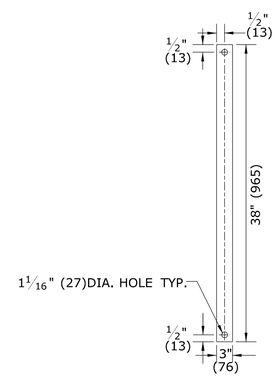

TIE STRAPS

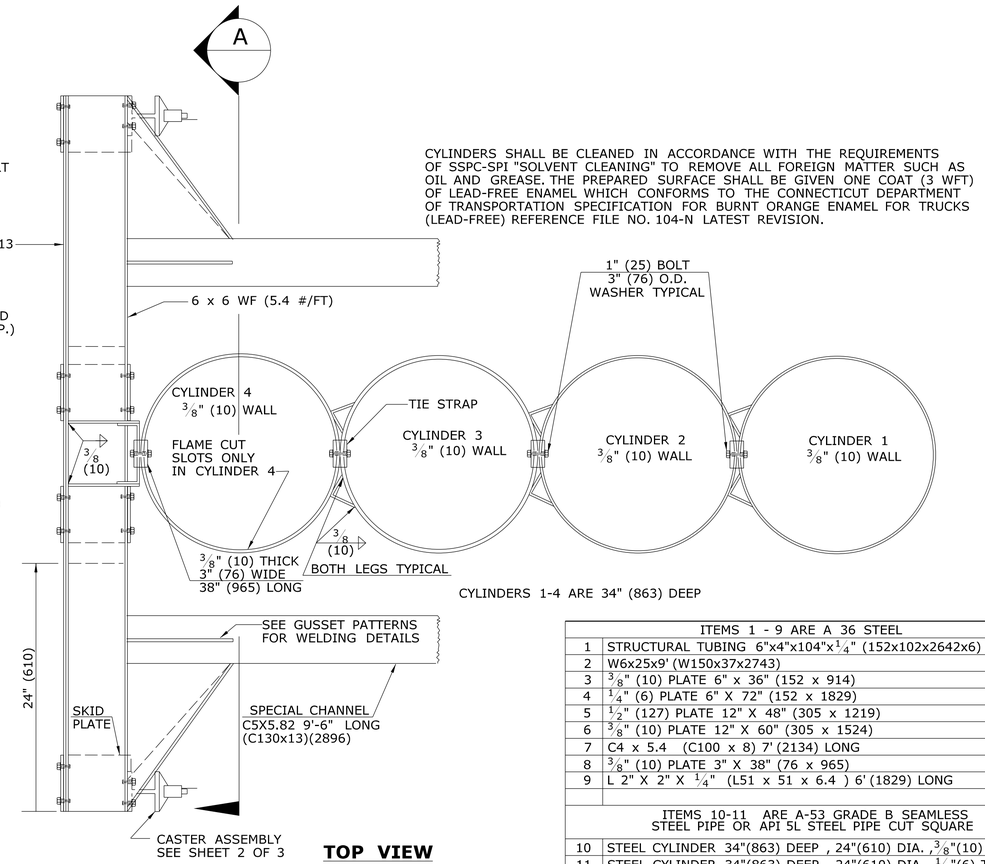

CYLINDERS SHALL BE CLEANED IN ACCORDANCE WITH THE REQUIREMENTS OF SSPC-SPI "SOLVENT CLEANING" TO REMOVE ALL FOREIGN MATTER SUCH AS OIL AND GREASE. THE PREPARED SURFACE SHALL BE GIVEN ONE COAT (3 WFT) OF LEAD-FREE ENAMEL WHICH CONFORMS TO THE CONNECTICUT DEPARTMENT OF TRANSPORTATION SPECIFICATION FOR BURNT ORANGE ENAMEL FOR TRUCKS (LEAD-FREE) REFERENCE FILE NO. 104-N LATEST REVISION.

TOP VIEW

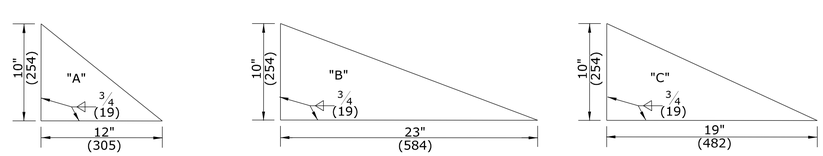

1"(25) PLATE **1/2"(13) PLATE** **1/2"(13) PLATE**

GUSSET PATTERNS

ITEMS 1 - 9 ARE A 36 STEEL		
1	STRUCTURAL TUBING 6"x4"x104"x1/4" (152x102x2642x6)	2
2	W6x25x9' (W150x37x2743)	1
3	3/8" (10) PLATE 6" x 36" (152 x 914)	1
4	1/4" (6) PLATE 6" X 72" (152 x 1829)	4
5	1/2" (127) PLATE 12" X 48" (305 x 1219)	1
6	3/8" (10) PLATE 12" X 60" (305 x 1524)	2
7	C4 x 5.4 (C100 x 8) 7' (2134) LONG	2
8	3/8" (10) PLATE 3" X 38" (76 x 965)	10
9	L 2" X 2" X 1/4" (L51 x 51 x 6.4) 6' (1829) LONG	1
ITEMS 10-11 ARE A-53 GRADE B SEAMLESS STEEL PIPE OR API 5L STEEL PIPE CUT SQUARE		
10	STEEL CYLINDER 34"(863) DEEP , 24"(610) DIA. ,3/8"(10) THICK	1
11	STEEL CYLINDER 34"(863) DEEP , 24"(610) DIA. ,1/4"(6) THICK	3
12	25' (7620) OF 1/4" (6) CHAIN	1
ITEMS 13-19 ARE 6061 T6 OR 6061-64 ALUMINUM		
13	1/4" (6) PLATE 34" (863) x 72" (1829)	1
14	6 x 6 (152x152) WF (5.4 #/FT) - 6' (1829) LONG	2
15	SPECIAL CHANNEL-DEPTH = 5" (127), WT/FT = 5.82 WIDTH = 2.875 (73), LENGTH = 9'-6" (2896)	2
16	C 6 x 4.48 (C 152 x 7) 34" (863) LONG	1
17	1/2" (13) PLATE 48" x 48" (1219 x 1219)	1
18	1/4" (6) PLATE 4" x 108" (102 x 2743)	2
19	1" (25) PLATE 10" X 12" (254 x 305)	1
20	1 X 3 A 325 STRUCTURAL BOLT WITH NUTS	12
21	HI STR. STRUCTURAL WASHERS	12
22	1 X 4 (25x102) A 325 STRUCTURAL BOLTS WITH NUTS	2
23	3/4" x 4 (20x102) A 325 STRUCTURAL BOLTS WITH NUTS	4
24	HI STR. STRUCTURAL WASHERS	4
25	LOCK WASHERS	16
26	CASTER ASSEMBLY	4

IMPACT PLATE & CYLINDER DETAILS

ALL METRIC DIMENSIONS ARE IN MILLIMETERS (mm) UNLESS OTHERWISE NOTED.

REV.	DATE	REVISION DESCRIPTION
-	-	-
-	-	-
-	-	-
-	-	-
-	-	-
-	-	-

THE INFORMATION, INCLUDING ESTIMATED QUANTITIES OF WORK, SHOWN ON THESE SHEETS IS BASED ON LIMITED INVESTIGATIONS BY THE STATE AND IS IN NO WAY WARRANTED TO INDICATE THE CONDITIONS OF ACTUAL QUANTITIES OF WORK WHICH WILL BE REQUIRED.

Plotted Date: 9/30/2010

NOT TO SCALE

STATE OF CONNECTICUT
DEPARTMENT OF TRANSPORTATION

Filename: CTDOT_HIGHWAY_STD.dgn Model: 75 - HW-1806_01a

SUBMITTED BY: NAME/DATE/TIME:

APPROVED BY: NAME/DATE/TIME:

CTDOT STANDARD SHEET

OFFICE OF ENGINEERING

STANDARD SHEET TITLE:

CT TRUCK MOUNTED IMPACT ATTENUATOR SHEET 1

STANDARD SHEET NO.:

HW-1806_01a

GENERAL NOTES :

FRONT AND REAR CASTER / JACK ASSEMBLY NOTES:

1. JACK SHALL BE SIDEWIND TYPE HAVING A LIFTING CAPACITY OF 1000LBS AND THROW DISTANCE OF 18" (457)
2. SWIVEL CASTER SHALL BE STEEL
3. THE LOCATION OF THE JACK MOUNT IN RELATION TO THE GROUND SHALL BE DETERMINED BY THE JACK SIZE AND MANUFACTURER'S SPECIFICATIONS.

NOTE: POSITION AND ATTACH SHOES TO CHASSIS AS REQUIRED TO ACCEPT FORWARD END OF 6" x 4" (152x102) BOX BEAMS

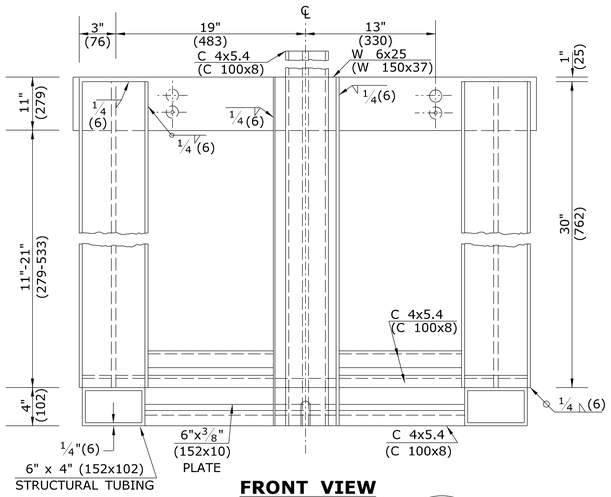

FRONT VIEW

SECTION B

CYLINDER 1 NOT SHOWN

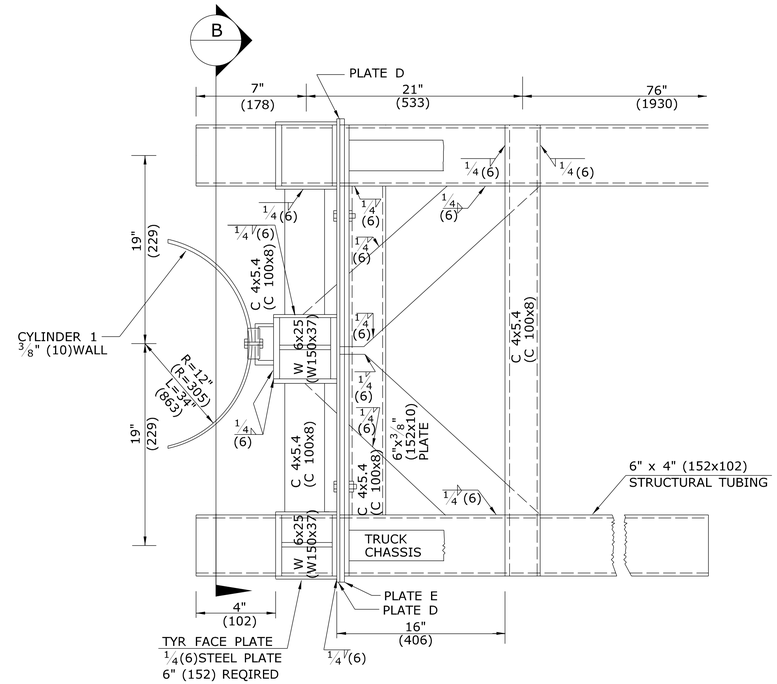

TOP VIEW

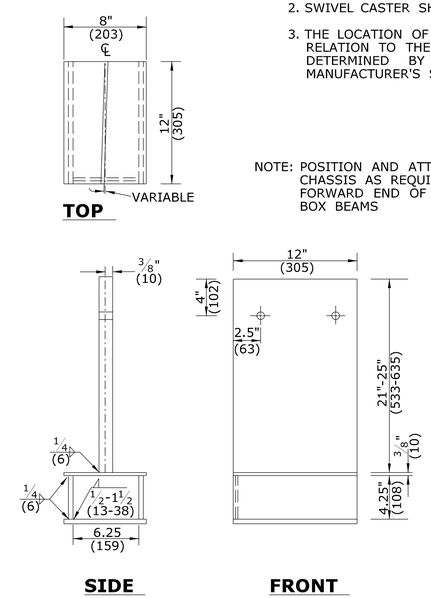

SUPPORT SHOE (2 REQUIRED)
A36 STEEL 3/8" (10)

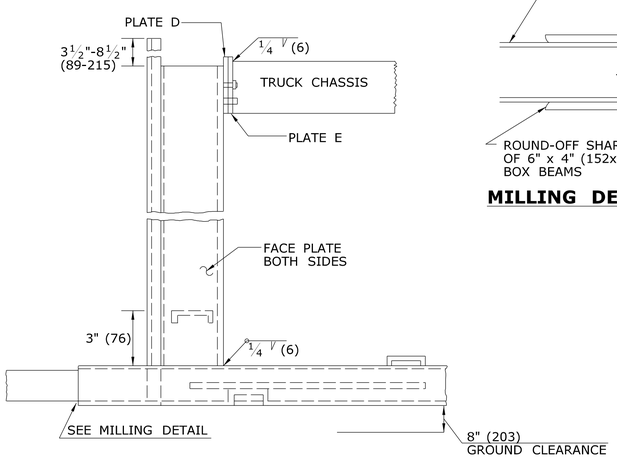

SIDE VIEW

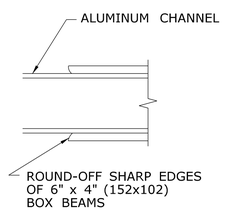

MILLING DETAIL

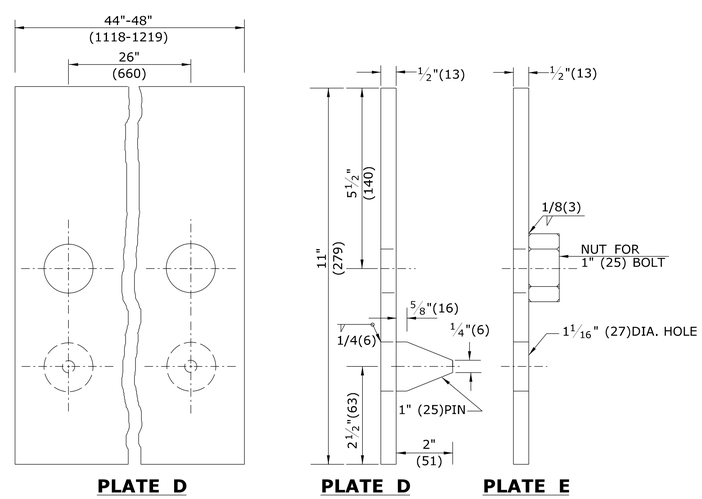

PLATE D **PLATE D** **PLATE E**

ATTACHMENT TO TRUCK
ALIGNMENT PIN DETAIL

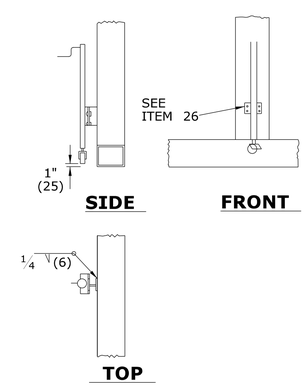

CASTER DETAIL

STEEL GUIDE FRAME DETAILS

ALL METRIC DIMENSIONS ARE IN MILLIMETERS (mm) UNLESS OTHERWISE NOTED.

REV.	DATE	REVISION DESCRIPTION
-	-	-
-	-	-
-	-	-
-	-	-
-	-	-
-	-	-

THE INFORMATION, INCLUDING ESTIMATED QUANTITIES OF WORK, SHOWN ON THESE SHEETS IS BASED ON LIMITED INVESTIGATIONS BY THE STATE AND IS IN NO WAY WARRANTED TO INDICATE THE CONDITIONS OF ACTUAL QUANTITIES OF WORK WHICH WILL BE REQUIRED.

Plotted Date: 9/30/2010

NOT TO SCALE

STATE OF CONNECTICUT
DEPARTMENT OF TRANSPORTATION

Filename: CTDOT_HIGHWAY_STD.dgn Model: 76 - HW-1806_01b

SUBMITTED BY: NAME/DATE/TIME:

APPROVED BY: NAME/DATE/TIME:

CTDOT STANDARD SHEET

OFFICE OF ENGINEERING

STANDARD SHEET TITLE:

CT TRUCK MOUNTED IMPACT ATTENUATOR SHEET 2

STANDARD SHEET NO.:

HW-1806_01b