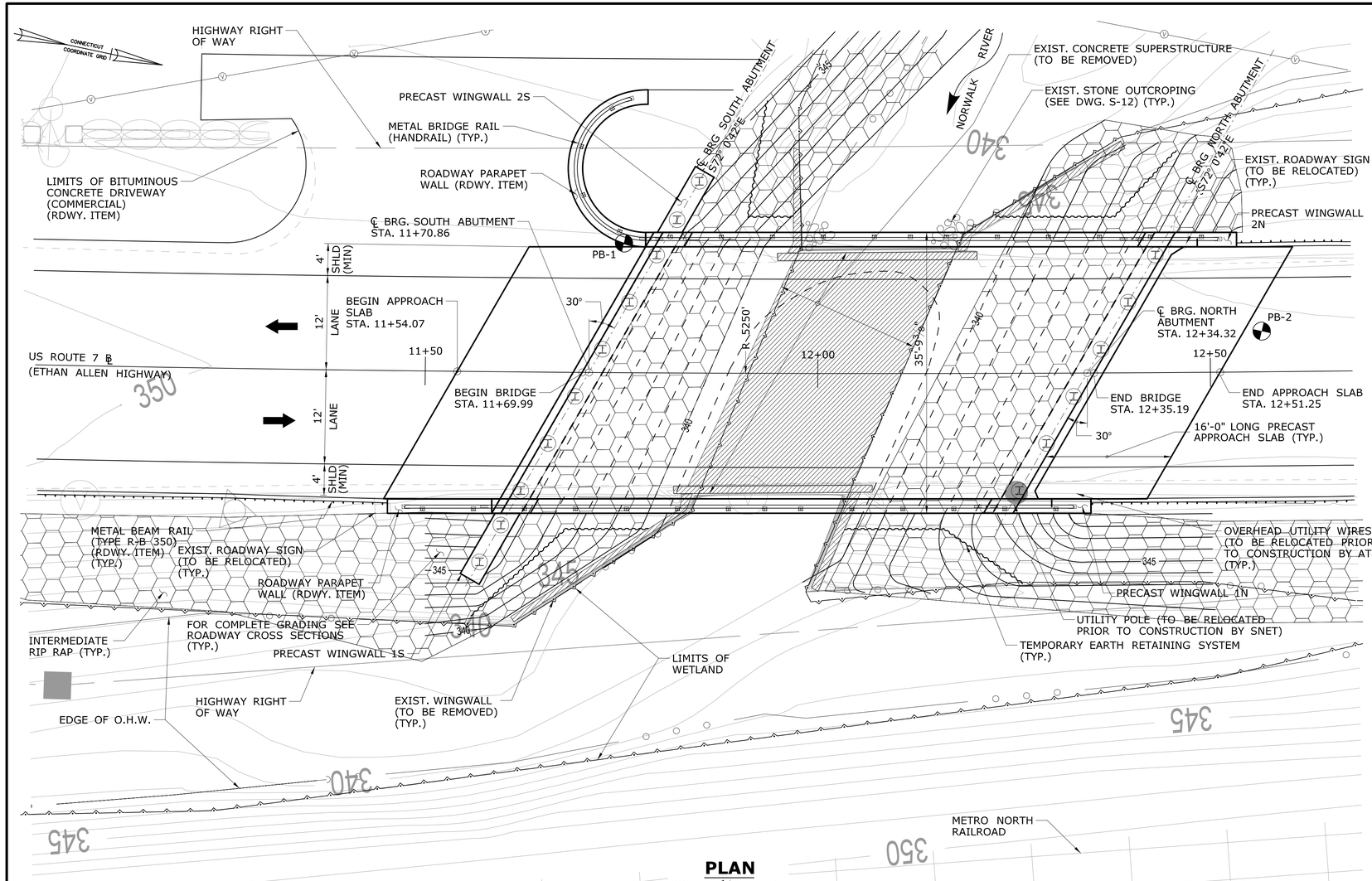

PLAN

SCALE : 1/8" = 1'-0"

TABLE OF QUANTITIES

ITEM	UNITS	QUANTITY
STRUCTURE EXCAVATION - EARTH (COMPLETE)	CY	1345
PERVIOUS STRUCTURE BACKFILL	CY	150
HMA S0.5	TON	60
HMA S0.25	TON	26
REMOVAL OF SUPERSTRUCTURE	L.S.	1
PRECAST PRECOMPRESSED CONCRETE/STEEL COMPOSITE SUPERSTRUCTURE	SF	2275
PRECAST APPROACH SLAB	SY	115
CLASS "F" CONCRETE	CY	40
PRECAST SUBSTRUCTURE ELEMENTS	CY	67 1
DEFORMED STEEL BARS - EPOXY COATED	LB	2600
FURNISHING STEEL PILES	LB	54100
DRIVING STEEL PILES	LF	730
POINT REINFORCEMENT FOR STEEL PILES	EA.	16
TEST PILE (STEEL HP12x74 - 52' LONG)	EA.	1
DYNAMIC PILE DRIVING ANALYSIS (P.D.A) TEST	EA.	1
MEMBRANE WATERPROOFING (COLD LIQUID ELASTOMERIC)	SY	365
DAMPPROOFING	SY	110
TEMPORARY EARTH RETAINING SYSTEM	SF	880
TEMPORARY PRECAST CONCRETE BARRIER CURB (STRUCTURE)	LF	160
RELOCATE TEMPORARY PRECAST CONCRETE BARRIER CURB (STRUCTURE)	LF	80
METAL BRIDGE RAIL (HANDRAIL)	LF	200
REMOVAL OF EXISTING MASONRY	CY	120

CONCRETE DISTRIBUTION

ITEM	UNITS	QUANTITY
SUPERSTRUCTURE	YD³	190
SUBSTRUCTURE	YD³	75
	TOTAL:	265

INSPECTION OF FIELD WELDS

METHOD	UNITS	QUANTITY
ULTRASONIC	IN.	-
MAGNETIC PARTICLE	FT	-

CURVE DATA

U.S. ROUTE 7
PC STA. 10+50.00
PT STA. 15+75.00

△ = 5° 43'46.5"
R = 5250.00'
T = 262.72'
L = 525.00'

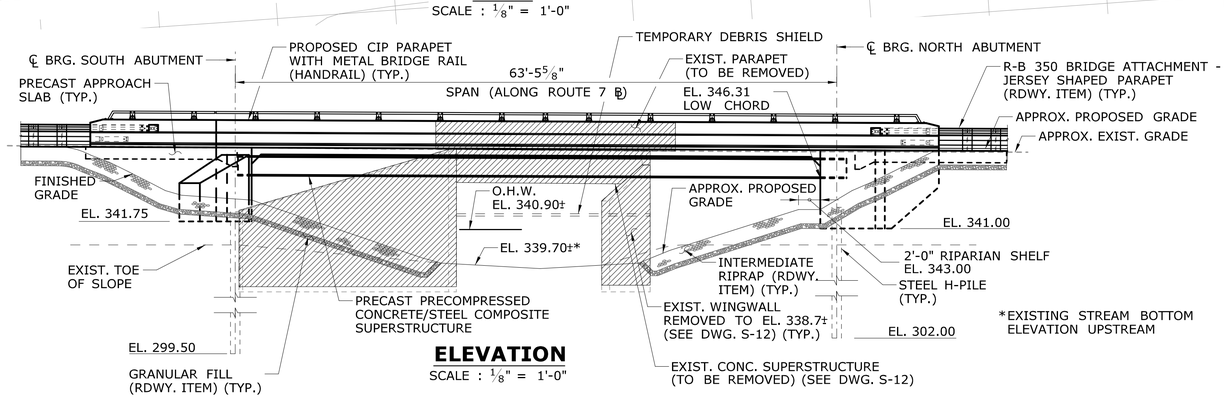

ELEVATION

SCALE : 1/8" = 1'-0"

LEGEND

NEW BORING

REMOVAL OF EXISTING BRIDGE

NOTICE TO BRIDGE INSPECTORS

THE DEPARTMENT'S BRIDGE SAFETY PROCEDURES REQUIRE THIS BRIDGE TO BE INSPECTED FOR, BUT NOT LIMITED TO, ALL APPROPRIATE COMPONENTS INDICATED IN THE GOVERNING MANUALS FOR BRIDGE INSPECTION. ATTENTION MUST BE GIVEN TO INSPECTING THE FOLLOWING SPECIAL COMPONENTS AND DETAILS. (THE LISTING FOR COMPONENTS FOR SPECIFIC ATTENTION SHALL NOT BE CONSTRUED TO REDUCE THE IMPORTANCE OF ANY OTHER COMPONENT OF THE STRUCTURE.) THE FREQUENCY OF INSPECTION OF THIS STRUCTURE SHALL BE IN ACCORDANCE WITH THE GOVERNING MANUALS FOR BRIDGE INSPECTION, UNLESS OTHERWISE DIRECTED BY THE MANAGER OF BRIDGE SAFETY AND EVALUATION.

COMPONENT OR DETAIL	STRUCTURE REFERENCE SHEET
NONE	----------

ADDENDUM NO. 2

REV.	DATE	REVISION DESCRIPTION	SHEET NO.
1	3/24/15	ADDENDUM NO. 2 - REVISION TO QUANTITY	05.02

THE INFORMATION, INCLUDING ESTIMATED QUANTITIES OF WORK, SHOWN ON THESE SHEETS IS BASED ON LIMITED INVESTIGATIONS BY THE STATE AND IS IN NO WAY WARRANTED TO INDICATE THE CONDITIONS OF ACTUAL QUANTITIES OF WORK WHICH WILL BE REQUIRED.

Plotted Date: 3/20/2015

DESIGNER/DRAFTER: G.T.G
CHECKED BY: O.S.J
SCALE AS NOTED

STATE OF CONNECTICUT
DEPARTMENT OF TRANSPORTATION

Filename: ...\SB_MSH_117_157_GPN-A2.dgn

SIGNATURE/BLOCK: STATE OF CONNECTICUT JOHN R. LALIBERTE No. 20860 LICENSED PROFESSIONAL ENGINEER

PARSONS BRINCKERHOFF
500 WINDING BROOK DR.
GLASTONBURY, CT 06033

PROJECT TITLE: REPLACEMENT OF ROUTE 7 OVER NORWALK RIVER (BRIDGE NO. 02029)

TOWN: RIDGEFIELD

DRAWING TITLE: GENERAL PLAN

PROJECT NO. 117-157
DRAWING NO. S-01
SHEET NO. 05.02.A2

Connecticut Department of Transportation
QA/QC Format Check

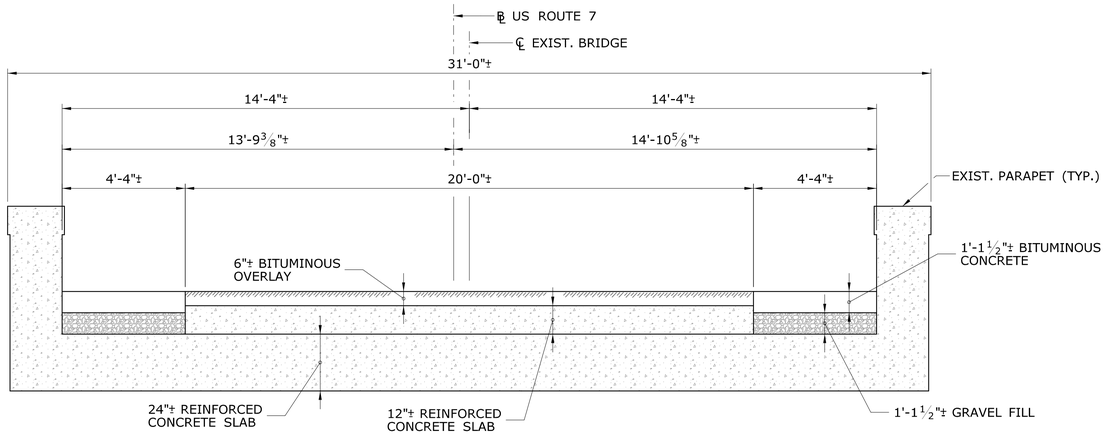

EXISTING BRIDGE SECTION

SCALE : 3/8" = 1'-0"

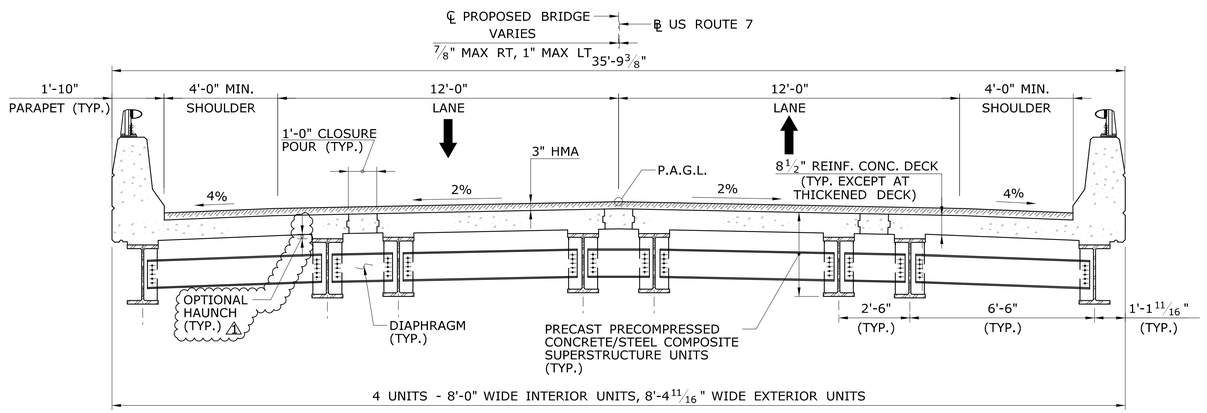

TYPICAL PROPOSED BRIDGE SECTION

SCALE : 3/8" = 1'-0"

HYDRAULIC DATA

DRAINAGE AREA	8.35 SQ. MI.
DESIGN FREQUENCY	100-YEAR
DESIGN DISCHARGE	1595 CFS
AVERAGE DAILY FLOW ELEVATION	341.6 FT u/s, 340.0 FT d/s
UPSTREAM DESIGN WATER SURFACE ELEVATION	EL. 350.44
DOWNSTREAM DESIGN WATER SURFACE ELEVATION	EL. 349.85
MAXIMUM SCOUR ELEVATION	EL. 320.20
FREQUENCY	100-YEAR
DISCHARGE	1595 CFS
WORST CASE SCOUR SUBSTRUCTURE UNIT	SOUTH ABUTMENT

TRANSPORTATION DIMENSION AND WEIGHT

MEMBER	MAX. SHIPPING LENGTH	MAX. SHIPPING HEIGHT	MAX. SHIPPING WIDTH	SHIPPING WEIGHT
PRECAST PRECOMPRESSED CONCRETE/STEEL COMPOSITE SUPERSTRUCTURE UNITS	64'-3"	3'-0"	8'-5"	94,000 LBS
PRECAST SUBSTRUCTURE ELEMENTS (NORTH ABUTMENT)	44'-0"	8'-5"	6'-6"	115,000 LBS
PRECAST APPROACH SLAB	18'-2"	2'-0"	16'-0"	55,000 LBS

GENERAL NOTES

SPECIFICATIONS: CONNECTICUT DEPARTMENT OF TRANSPORTATION FORM 816 (2004). SUPPLEMENTAL SPECIFICATION DATED JULY 2014 AND SPECIAL PROVISIONS.

DESIGN SPECIFICATIONS: AASHTO LRFD BRIDGE DESIGN SPECIFICATIONS, SIXTH EDITION, 2012 AS SUPPLEMENTED BY THE CONNECTICUT DEPARTMENT OF TRANSPORTATION BRIDGE MANUAL (2003) WITH INTERIM SPECIFICATION UP TO AND INCLUDING 2014.

ALLOWABLE DESIGN STRESSES:

CLASS "A" CONCRETE	BASED ON f'c = 3300 PSI
CLASS "F" CONCRETE	BASED ON f'c = 4400 PSI
HIGH EARLY STRENGTH CONCRETE	BASED ON f'c = 5000 PSI
REINFORCEMENT (ASTM A615 GRADE 60)	Fy = 60000 PSI
STRUCTURAL STEEL AASHTO (M270, GRADE 50)	Fy = 50000 PSI

NOTE: THE SPECIFIED CONCRETE STRENGTH USED IN DESIGN, F'c, OF THE CONCRETE COMPONENTS IS NOTED ABOVE. THE MINIMUM COMPRESSIVE STRENGTH OF THE CONCRETE IN THE CONSTRUCTED COMPONENTS SHALL CONFORM TO THE REQUIREMENTS OF "SECTION 6.01 CONCRETE FOR STRUCTURES".

LIVE LOAD: HL-93

FUTURE PAVING ALLOWANCE: NONE

STRUCTURAL STEEL: STRUCTURAL STEEL (LOW ALLOY) SHALL CONFORM TO AASHTO M270, GRADE 50 AND SHALL BE HOT DIPPED GALVANIZED AFTER FABRICATION.

BITUMINOUS CONCRETE OVERLAY: THE TOTAL THICKNESS SHALL BE 3". BOTTOM COURSE THICKNESS SHALL CONSIST OF 1" HMA S0.25, AND THE TOP COURSE THICKNESS SHALL CONSIST OF 2" OF HMA S0.5.

PILE LOADS: THE VARIOUS GROUP LOADINGS NOTED ON THE SUBSTRUCTURE PLAN SHEETS REFER TO THE GROUP LOADS AS GIVEN IN THE AASHTO LRFD BRIDGE DESIGN SPECIFICATIONS.

DIMENSIONS: WHEN DECIMAL DIMENSIONS ARE GIVEN TO LESS THAN THREE DECIMAL PLACES, THE OMITTED DIGITS SHALL BE ASSUMED TO BE ZERO.

EXISTING DIMENSIONS AND ELEVATIONS: DIMENSIONS AND ELEVATIONS OF THE EXISTING STRUCTURE SHOWN ON THESE PLANS ARE FOR GENERAL REFERENCE ONLY. THEY HAVE BEEN TAKEN FROM THE ORIGINAL DESIGN DRAWINGS AND LIMITED FIELD SURVEY AND ARE NOT GUARANTEED. THE CONTRACTORS SHALL TAKE ALL FIELD MEASUREMENTS NECESSARY TO ASSURE PROPER FIT OF THE FINISHED WORK AND SHALL ASSUME FULL RESPONSIBILITY FOR THEIR ACCURACY. ALL FIELD MEASUREMENTS TAKEN SHALL BE SUPPLIED TO THE ENGINEER FOR REVIEW.

REMAIN-IN-PLACE FORMS: USE OF REMAIN-IN-PLACE FORMS ON THIS STRUCTURE IS NOT ALLOWED.

TRAFFIC LOADS: CONSTRUCTION LOADS AND DEAD LOADS WILL BE PERMITTED WHEN DIRECTED BY THE ENGINEER, BUT ONLY WHEN THE CONCRETE HAS REACHED A STRENGTH OF f'c= 3300 PSI. LIVE LOADS (TRAFFIC) WILL BE PERMITTED ON THE STRUCTURE AFTER THE CONCRETE HAS REACHED A STRENGTH OF f'c= 4400 PSI.

CLASS "A" CONCRETE: CLASS "A" CONCRETE SHALL BE USED FOR ALL PRECAST SUBSTRUCTURE ELEMENTS INCLUDING ABUTMENTS AND BARRIER WALL.

CLASS "F" CONCRETE: CLASS "F" CONCRETE SHALL BE USED FOR THE PRECAST BRIDGE DECK ALONG WITH PARAPETS AND APPROACH SLABS.

HIGH EARLY STRENGTH CONCRETE: HIGH EARLY STRENGTH CONCRETE SHALL BE USED FOR CAST-IN-PLACE ABUTMENT CAP AND LONGITUDINAL CLOSURE JOINTS BETWEEN PRECAST SUPERSTRUCTURE UNITS.

HIGH EARLY STRENGTH NON-SHRINK GROUT: HIGH EARLY STRENGTH NON-SHRINK GROUT SHALL BE USED FOR FILLING OF ALL THREADED SLEEVES AT PRECAST ABUTMENT PILES AND PRECAST TO PRECAST CONNECTIONS.

JOINT SEAL: SEE SPECIAL PROVISIONS.

EXPOSED EDGES: EXPOSED EDGES OF CONCRETE SHALL BE BEVELED 1" x 1" UNLESS DIMENSIONED OTHERWISE.

CONCRETE COVER: ALL REINFORCEMENT SHALL HAVE 2" COVER UNLESS DIMENSIONED OTHERWISE.

REINFORCEMENT: ALL REINFORCEMENT SHALL BE ASTM A615 GRADE 60.

EPOXY COATED REINFORCING BARS: ALL REINFORCEMENT IN THE SUPERSTRUCTURE INCLUDING THE CONCRETE DECK SLAB, CAST-IN-PLACE ABUTMENT CAP AND THE PARAPETS SHALL BE EPOXY COATED. ALL REINFORCEMENT IN THE TOP MAT OF THE CONCRETE APPROACH SLABS SHALL BE EPOXY COATED. THESE BARS SHALL BE INCLUDED IN THE INDIVIDUAL PRECAST ITEMS. EPOXY COATED REINFORCEMENT WITHIN PARAPETS SHALL BE PAID FOR UNDER, "DEFORMED STEEL BARS - EPOXY COATED".

PREFORMED EXPANSION JOINT FILLER: THE COST OF FURNISHING AND INSTALLING PREFORMED EXPANSION JOINT FILLER SHALL BE INCLUDED IN THE COST OF "CLASS 'A' CONCRETE".

CONSTRUCTION JOINTS: CONSTRUCTION JOINTS, OTHER THAN THOSE SHOWN ON THE PLANS, WILL NOT BE PERMITTED WITHOUT THE PRIOR APPROVAL OF THE ENGINEER.

STATIONING: STATIONS ARE GIVEN IN FEET.

GIRDER HAUNCH: ALL PLANS, DIMENSIONS, AND ELEVATIONS SHOWN ARE BASED ON A 2" HAUNCH OVER GIRDERS. THE CONTRACTOR MAY CHOOSE TO FABRICATE THE PRECAST SUPERSTRUCTURE UNITS WITHOUT HAUNCHES. THIS SHALL BE DONE AT NO ADDITIONAL COST TO THE DEPARTMENT. THE CONTRACTOR IS RESPONSIBLE FOR MAKING ANY AND ALL NECESSARY ADJUSTMENTS, AND SHALL INDICATE THESE ON THE SHOP DRAWINGS. ⚠1

ADDENDUM NO. 2

REV.	DATE	REVISION DESCRIPTION	SHEET NO.
⚠1	3/24/15	ADDENDUM NO. 2 - ADDED HAUNCH NOTES	05.03

THE INFORMATION, INCLUDING ESTIMATED QUANTITIES OF WORK, SHOWN ON THESE SHEETS IS BASED ON LIMITED INVESTIGATIONS BY THE STATE AND IS IN NO WAY WARRANTED TO INDICATE THE CONDITIONS OF ACTUAL QUANTITIES OF WORK WHICH WILL BE REQUIRED.

Plotted Date: 3/23/2015

DESIGNER/DRAFTER: G.T.G/J.C.G
CHECKED BY: O.S.J
SCALE AS NOTED

STATE OF CONNECTICUT
DEPARTMENT OF TRANSPORTATION

Filename: ...\SB_MSH_117_157_GNN-A2.dgn

SIGNATURE/BLOCK: STATE OF CONNECTICUT LICENSED PROFESSIONAL ENGINEER No. 20890

PARSONS BRINCKERHOFF
500 WINDING BROOK DR.
GLASTONBURY, CT 06033

PROJECT TITLE: REPLACEMENT OF ROUTE 7 OVER NORWALK RIVER (BRIDGE NO. 02029)

TOWN: RIDGEFIELD

DRAWING TITLE: GENERAL NOTES

PROJECT NO. 117-157
DRAWING NO. S-02
SHEET NO. 05.03.A2

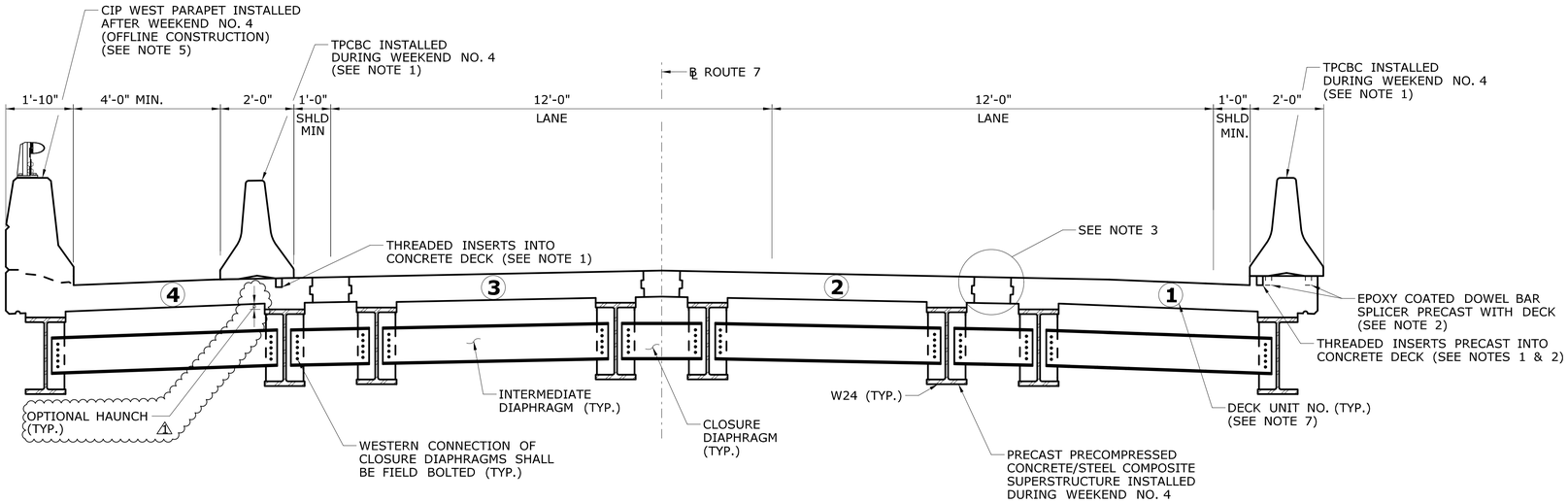

TYPICAL PROPOSED CROSS SECTION WEEKEND NO. 4

SCALE: ½" = 1'-0"

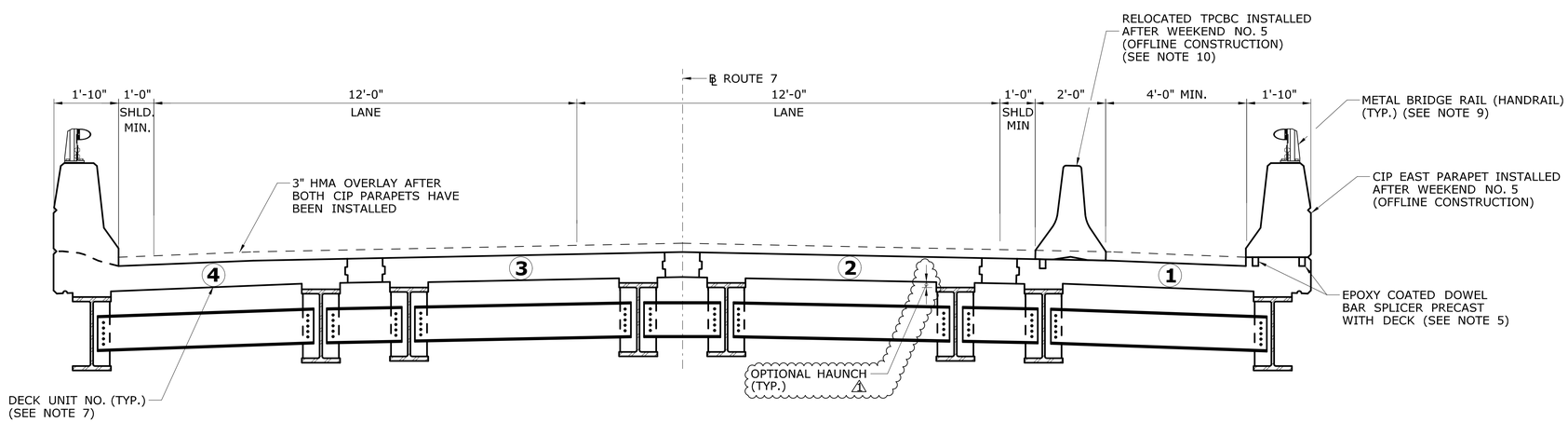

TYPICAL PROPOSED CROSS SECTION AFTER WEEKEND NO. 5

SCALE: ½" = 1'-0"

NOTES:

1. DECK UNIT NO. 1 & 4 SHALL BE PRECAST WITH THREADED INSERTS TO ACCOMMODATE THE TPCBC ANCHOR BOLTS. THE CONTRACTOR IS RESPONSIBLE FOR VERIFYING THE DRY-FIT OF TPCBC WITH THREADED INSERTS PRIOR TO THE WEEKEND CLOSURE TO ENSURE EASE OF ERECTION.
2. CONTRACTOR TO VERIFY IN SHOP PLACEMENT OF EPOXY COATED DOWEL BAR SPLICERS AND THREADED INSERTS FOR TPCBC ANCHORAGE TO ENSURE NO CONFLICT BETWEEN THEM AT UNIT NO. 1 CAST-IN-PLACE PARAPET LOCATION.
3. FOR "CLOSURE POUR DETAIL", SEE DWG. S-21.
4. FOR CONSTRUCTION SEQUENCE SEE DWGS. S-06, S-07, AND S-08.
5. THE EXTERIOR DECK UNIT NO. 1 SHALL BE CAST WITH EPOXY COATED DOWEL BAR SPLICERS AS SHOWN ON THE PLANS.
6. REINFORCING BARS FOR FASCIA BARRIER AT UNIT NO. 4 SHALL BE CAST WITH THE PRECAST DECK AND SHALL BE PAID UNDER ITEM, "PRECAST PRECOMPRESSED CONCRETE/STEEL COMPOSITE SUPERSTRUCTURE".
7. FOR FURTHER INFORMATION ON PRECAST DECK UNIT NOS. SEE DWG. S-20.
8. THE THREADED INSERTS FOR FASTENING TPCBC TO DECK UNITS NO. 1 & 4 SHALL BE PAID UNDER ITEM, "TEMPORARY PRECAST CONCRETE BARRIER CURB (STRUCTURE)".
9. FOR FURTHER DETAILS OF METAL BRIDGE RAIL (HANDRAIL), SEE DWG. S-25.
10. TPCBC INSTALLED AFTER WEEKEND NO. 5 ON DECK UNIT NO. 1 FOR EAST PARAPET CONSTRUCTION SHALL BE FASTENED TO DECK BY MEANS OF THREADED INSERTS. FOR MORE INFORMATION SEE DWG. S-26.
11. HAUNCH SHOWN IS OPTIONAL. THE CONTRACTOR MAY CHOOSE TO FABRICATE THE PRECAST SUPERSTRUCTURE UNITS WITHOUT HAUNCHES AT NO ADDITIONAL COST TO THE DEPARTMENT. THE CONTRACTOR IS RESPONSIBLE FOR MAKING ANY AND ALL NECESSARY ADJUSTMENTS, AND SHALL INDICATE THESE ON THE SHOP DRAWINGS. △1

ADDENDUM NO. 2

REV.	DATE	REVISION DESCRIPTION	SHEET NO.
1	3/24/15	ADDENDUM NO. 2 - ADDED HAUNCH NOTES	05.11

THE INFORMATION, INCLUDING ESTIMATED QUANTITIES OF WORK, SHOWN ON THESE SHEETS IS BASED ON LIMITED INVESTIGATIONS BY THE STATE AND IS IN NO WAY WARRANTED TO INDICATE THE CONDITIONS OF ACTUAL QUANTITIES OF WORK WHICH WILL BE REQUIRED.

Plotted Date: 3/23/2015

DESIGNER/DRAFTER: G.T.G/G.L.L.
CHECKED BY: O.S.J
SCALE AS NOTED

STATE OF CONNECTICUT
DEPARTMENT OF TRANSPORTATION

Filename: ...\SB_MSH_117_157_SLAB-A2.dgn

SIGNATURE/BLOCK:
PARSONS BRINCKERHOFF
500 WINDING BROOK DR.
GLASTONBURY, CT 06033

PROJECT TITLE:
REPLACEMENT OF ROUTE 7 OVER NORWALK RIVER (BRIDGE NO. 02029)

TOWN: RIDGEFIELD

DRAWING TITLE: STAGING DETAILS 2

PROJECT NO. 117-157
DRAWING NO. S-10
SHEET NO. 05.11.A2

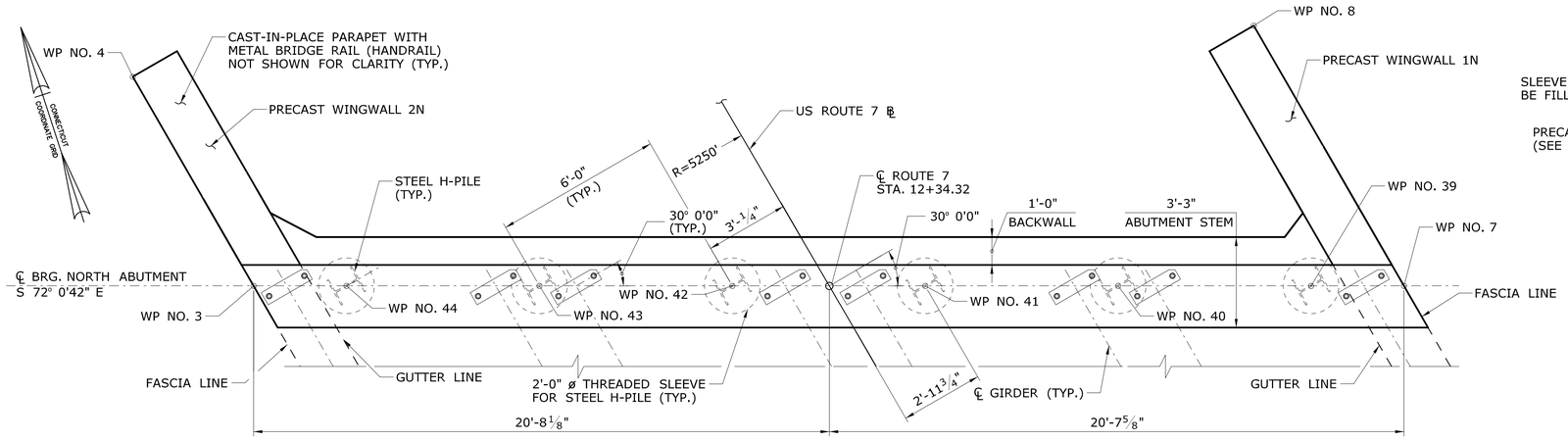

PLAN

SCALE: ⅜" = 1'-0"

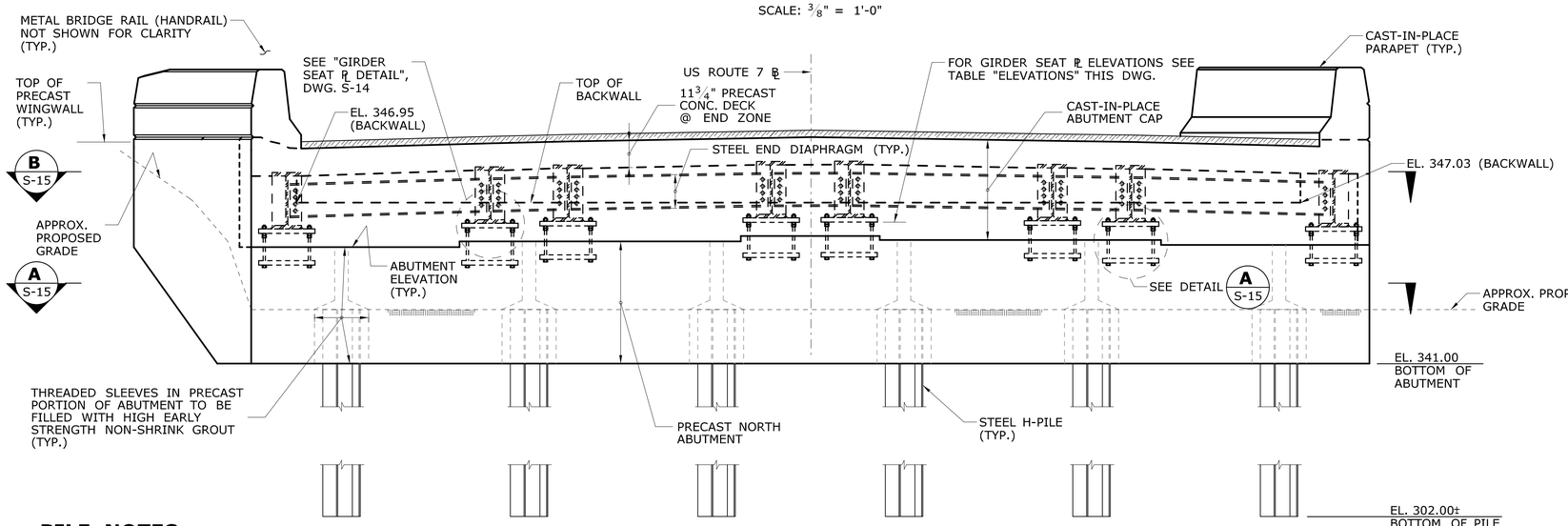

ELEVATION

SCALE: ⅜" = 1'-0"

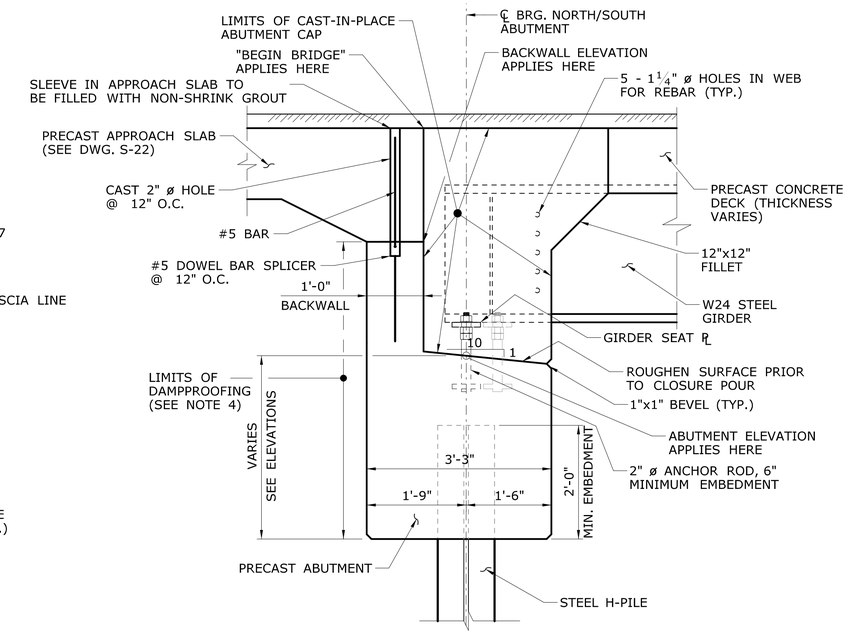

TYPICAL ABUTMENT DETAIL

SCALE: 3/4" = 1'-0"

ELEVATIONS

GIRDER	GIRDER SEAT ℄* WITH HAUNCH	GIRDER SEAT ℄* WITHOUT HAUNCH**	ABUTMENT
1	345.88	346.04	345.38
2	346.08	346.24	345.56
3	346.11	346.27	345.56
4	346.23	346.39	345.72
5	346.22	346.38	345.72
6	346.07	346.23	345.51
7	346.02	346.18	345.51
8	345.80	345.96	345.30

* SEE "DETAIL A", DWG. S-15
** SEE NOTE 10 △1

PILE NOTES:

1. ALL PILES SHALL BE HP12x74 (ASTM A709, GRADE 50).
2. ⊢ DENOTES PROPOSED VERTICAL PILE.
3. PILES SHALL BE DRIVEN TO REFUSAL ON BEDROCK.
4. NUMBER OF PILES = 6.
5. ESTIMATED LENGTH OF PILES = 42'-0"
6. PILES SHALL NOT BE SPLICED EXCEPT WITH THE APPROVAL OF THE ENGINEER. PREFABRICATED SPLICING DEVICES MAY BE USED AS APPROVED BY THE ENGINEER.
7. POINT REINFORCEMENT FOR STEEL PILES SHALL BE USED FOR ALL PILES. PREFABRICATED POINT REINFORCEMENT SHALL BE USED. THE CONTRACTOR IS REQUIRED TO SUBMIT PILE POINT REINFORCEMENT DETAILS TO THE ENGINEER FOR REVIEW AND APPROVAL.
8. PRIOR TO DRIVING PILES, THE CONTRACTOR SHALL SUBMIT TO THE ENGINEER FOR REVIEW AND APPROVAL, THE METHOD AND SEQUENCING OF PILE DRIVING.
9. MAX. DESIGN PILE LOAD: 122 KIPS FOR STRENGTH I
   96 KIPS FOR SERVICE I
10. LIMITS OF PAYMENT FOR PILES IS BASED ON ESTIMATED PILE LENGTH, ADDITIONAL PILE LENGTH MAY BE NEEDED FOR CONTRACTOR MEANS AND METHODS OF INSTALLATION. NO ADDITIONAL PAYMENT FOR THIS LENGTH AND CUTTING SHALL BE MADE.

NOTES:

1. FOR WORKING POINT COORDINATES, SEE DWG. S-03.
2. FOR PRECAST WINGWALL ELEVATIONS AND REINFORCEMENT SECTIONS, SEE DWG. S-16 TO S-18.
3. FOR PRECAST ABUTMENT REINFORCING DETAILS SEE DWG. S-15.
4. DAMPPROOFING OF ABUTMENTS AND WINGWALLS TO BE DONE DURING FABRICATION. CONTRACTOR SHALL COORDINATE WITH FABRICATOR THE APPLICATION OF DAMPPROOFING SO AS TO MINIMIZE POSSIBILITY OF ERROR IN APPLICATION.
5. PRECAST NORTH ABUTMENT CONCRETE, THREADED SLEEVES, NON-SHRINK GROUT, REINFORCEMENT, ANCHOR RODS, NUTS, WASHERS, ANCHOR PLATES & GIRDER SEAT PLATES SHALL BE PAID UNDER ITEM, "PRECAST SUBSTRUCTURE ELEMENTS".
6. ALL ABUTMENT AND GIRDER SEAT ELEVATIONS APPLY AT ℄ OF BEARING.
7. THE CAST-IN-PLACE ABUTMENT CAP CONCRETE AND REINFORCEMENT SHALL BE PAID UNDER ITEM, "PRECAST PRECOMPRESSED CONCRETE/STEEL COMPOSITE SUPERSTRUCTURE".
8. GIRDER SEAT PLATE AND ANCHOR PLATE SHALL CONFORM TO AASHTO M270, GRADE 50.
9. ANCHOR BOLT SHALL CONFORM TO AASHTO F 1554 GRADE 36.
10. DIMENSIONS AND ELEVATIONS SHOWN ARE BASED ON A 2" HAUNCH OVER GIRDERS. THE CONTRACTOR MAY CHOOSE TO FABRICATE THE PRECAST SUPERSTRUCTURE UNITS WITHOUT HAUNCHES AT NO ADDITIONAL COST TO THE DEPARTMENT. THE CONTRACTOR IS RESPONSIBLE FOR MAKING ANY AND ALL NECESSARY ADJUSTMENTS, AND SHALL INDICATE THESE ON THE SHOP DRAWINGS. △1

ADDENDUM NO. 2

REV.	DATE	REVISION DESCRIPTION	SHEET NO.
△1	3/24/15	ADDENDUM NO. 2 - ADDED HAUNCH NOTE & GIRDER SEAT EL.	05.14

THE INFORMATION, INCLUDING ESTIMATED QUANTITIES OF WORK, SHOWN ON THESE SHEETS IS BASED ON LIMITED INVESTIGATIONS BY THE STATE AND IS IN NO WAY WARRANTED TO INDICATE THE CONDITIONS OF ACTUAL QUANTITIES OF WORK WHICH WILL BE REQUIRED.

Plotted Date: 3/23/2015

DESIGNER/DRAFTER: G.T.G/J.G.
CHECKED BY: O.S.J
SCALE AS NOTED

STATE OF CONNECTICUT
DEPARTMENT OF TRANSPORTATION

Filename: ...\SB_MSH_117_157_ABTS-A2.dgn

SIGNATURE/BLOCK:

PARSONS BRINCKERHOFF
500 WINDING BROOK DR.
GLASTONBURY, CT 06033

PROJECT TITLE:
REPLACEMENT OF ROUTE 7 OVER NORWALK RIVER (BRIDGE NO. 02029)

TOWN: RIDGEFIELD

DRAWING TITLE: NORTH ABUTMENT PLAN AND ELEVATION

PROJECT NO. 117-157
DRAWING NO. S-13
SHEET NO. 05.14.A2

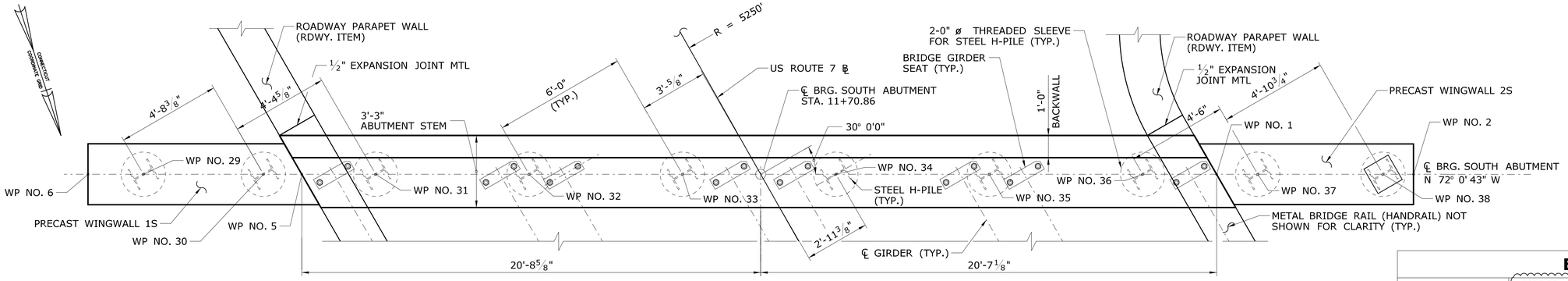

PLAN

SCALE: 3/8" = 1'-0"

ELEVATIONS

GIRDER	GIRDER SEAT ℞* WITH HAUNCH	GIRDER SEAT ℞* WITHOUT HAUNCH**	ABUTMENT
1	346.16	346.32	345.66
2	346.35	346.51	345.84
3	346.39	346.55	345.84
4	346.51	346.67	346.00
5	346.50	346.66	346.00
6	346.35	346.51	345.80
7	346.30	346.46	345.80
8	346.09	346.25	345.59

*SEE "DETAIL A", SEE DWG. S-15
**SEE NOTE 10 △1

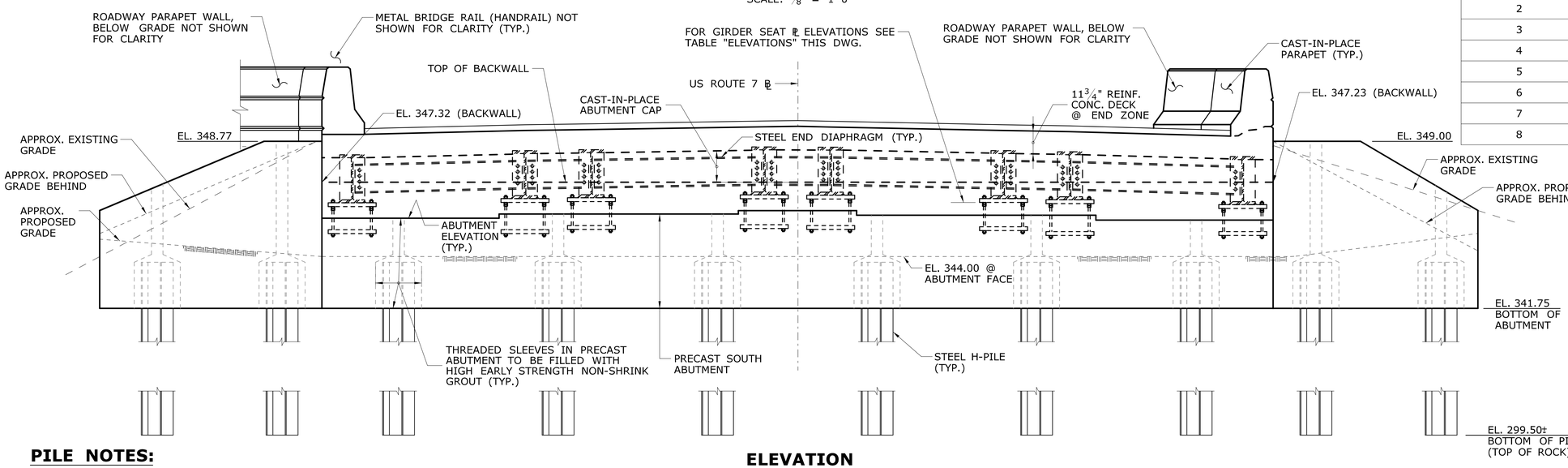

ELEVATION

SCALE: 3/8" = 1'-0"

PILE NOTES:

1. ALL PILES SHALL BE HP12x74 (ASTM A709, GRADE 50).
2. DENOTES PROPOSED VERTICAL PILE.
   DENOTES TEST PILE.
3. PILES SHALL BE DRIVEN TO REFUSAL ON BEDROCK.
4. NUMBER OF PILES = 10.
5. ESTIMATED LENGTH OF PILES = 44'-3"
6. PILES SHALL NOT BE SPLICED EXCEPT WITH THE APPROVAL OF THE ENGINEER. PREFABRICATED SPLICING DEVICES MAY BE USED AS APPROVED BY THE ENGINEER.
7. POINT REINFORCEMENT FOR STEEL PILES SHALL BE USED FOR ALL PILES. PREFABRICATED POINT REINFORCEMENT SHALL BE USED. THE CONTRACTOR IS REQUIRED TO SUBMIT PILE POINT REINFORCEMENT DETAILS TO THE ENGINEER FOR REVIEW AND APPROVAL.
8. PRIOR TO DRIVING PILES, THE CONTRACTOR SHALL SUBMIT TO THE ENGINEER FOR REVIEW AND APPROVAL, THE METHOD AND SEQUENCING OF PILE DRIVING.
9. SINGLE PDA TEST TO BE PERFORMED WITHIN WINGWALL 2S LIMITS.
   MAX. DESIGN PILE LOAD: 122 KIPS FOR STRENGTH I
   96 KIPS FOR SERVICE I
10. LIMITS OF PAYMENT FOR PILES IS BASED ON ESTIMATED PILE LENGTH, ADDITIONAL PILE LENGTH MAY BE NEEDED FOR CONTRACTOR MEANS AND METHODS OF INSTALLATION. NO ADDITIONAL PAYMENT FOR THIS LENGTH AND CUTTING SHALL BE MADE.

NOTES:

1. FOR WORKING POINT COORDINATES, SEE DWG. S-03.
2. FOR PRECAST WINGWALL ELEVATIONS AND REINFORCEMENT SECTIONS, SEE DWG. S-16 TO S-18.
3. FOR PRECAST ABUTMENT REINFORCING DETAILS SEE DWG. S-15.
4. DAMPPROOFING OF ABUTMENTS AND WINGWALLS TO BE DONE DURING FABRICATION. CONTRACTOR SHALL COORDINATE WITH FABRICATOR THE APPLICATION OF DAMPPROOFING SO AS TO MINIMIZE POSSIBILITY OF ERROR IN APPLICATION.
5. PRECAST NORTH ABUTMENT CONCRETE, THREADED SLEEVES, NON-SHRINK GROUT, REINFORCEMENT, ANCHOR RODS, NUTS, WASHERS, ANCHOR PLATES & GIRDER SEAT PLATES SHALL BE PAID UNDER ITEM, "PRECAST SUBSTRUCTURE ELEMENTS".
6. ALL ABUTMENT AND GIRDER SEAT ELEVATIONS APPLY AT ℄ OF BEARING.
7. THE CAST-IN-PLACE ABUTMENT CAP CONCRETE AND REINFORCEMENT SHALL BE PAID UNDER ITEM, "PRECAST PRECOMPRESSED CONCRETE/STEEL COMPOSITE SUPERSTRUCTURE".
8. GIRDER SEAT PLATE AND ANCHOR PLATE SHALL CONFORM TO AASHTO M270, GRADE 50.
9. ANCHOR BOLT SHALL CONFORM TO AASHTO F 1554 GRADE 36.
10. DIMENSIONS AND ELEVATIONS SHOWN ARE BASED ON A 2" HAUNCH OVER GIRDERS. THE CONTRACTOR MAY CHOOSE TO FABRICATE THE PRECAST SUPERSTRUCUTRE UNITS WITHOUT HAUNCHES AT NO ADDITIONAL COST TO THE DEPARTMENT. THE CONTRACTOR IS RESPONSIBLE FOR MAKING ANY AND ALL NECESSARY ADJUSTMENTS, AND SHALL INDICATE THESE ON THE SHOP DRAWINGS. △1

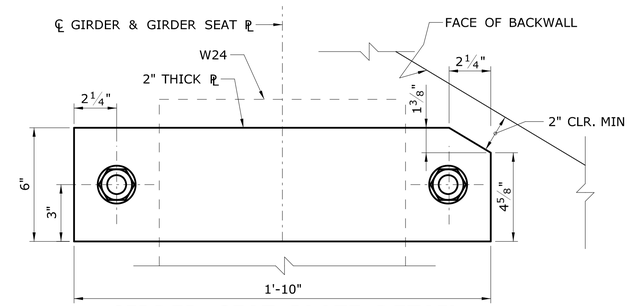

GIRDER SEAT PLATE DETAIL

SCALE: 3" = 1'-0"
(ANCHOR ℞ SIMILAR)

ADDENDUM NO. 2

REV.	DATE	REVISION DESCRIPTION	SHEET NO.
△1	3/24/15	ADDENDUM NO. 2 - ADDED HAUNCH NOTE & GIRDER SEAT EL.	05.15

THE INFORMATION, INCLUDING ESTIMATED QUANTITIES OF WORK, SHOWN ON THESE SHEETS IS BASED ON LIMITED INVESTIGATIONS BY THE STATE AND IS IN NO WAY WARRANTED TO INDICATE THE CONDITIONS OF ACTUAL QUANTITIES OF WORK WHICH WILL BE REQUIRED.

Plotted Date: 3/23/15

DESIGNER/DRAFTER: G.T.G/J.G.
CHECKED BY: O.S.J
0 1' 2' 4'
SCALE 3/8"=1'-0"

STATE OF CONNECTICUT
DEPARTMENT OF TRANSPORTATION

Filename: ...\SB_MSH_117_157_ABTS-1-A2.dgn

SIGNATURE/BLOCK: PARSONS BRINCKERHOFF, 500 WINDING BROOK DR., GLASTONBURY, CT 06033

PROJECT TITLE: REPLACEMENT OF ROUTE 7 OVER NORWALK RIVER (BRIDGE NO. 02029)

TOWN: RIDGEFIELD

DRAWING TITLE: SOUTH ABUTMENT PLAN AND ELEVATION

PROJECT NO. 117-157
DRAWING NO. S-14
SHEET NO. 05.15.A2

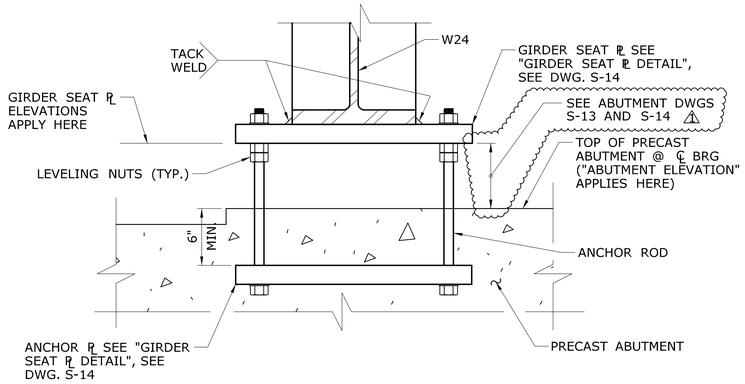

DETAIL A
SCALE: 1½" = 1'-0" (S-13)

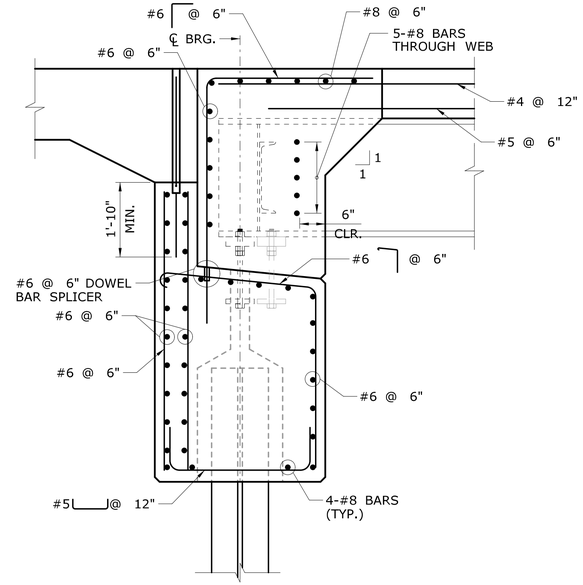

TYPICAL ABUTMENT REINFORCEMENT WITH GIRDER EMBEDMENT
SCALE: ¾" = 1'-0"

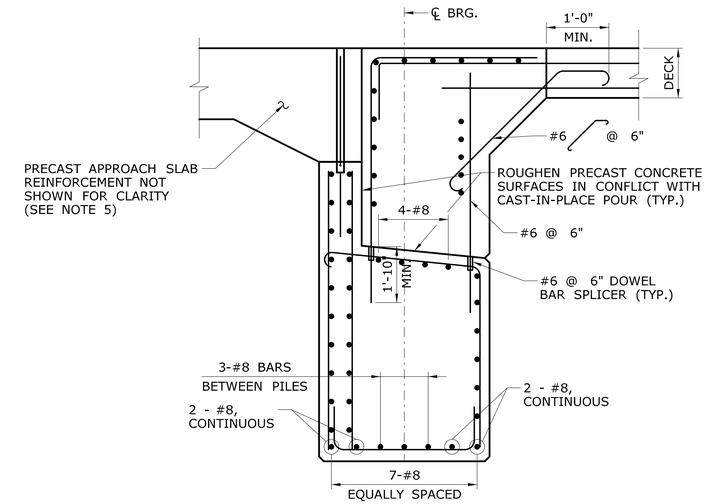

TYPICAL ABUTMENT REINFORCEMENT (BETWEEN GIRDERS)
SCALE: ¾" = 1'-0"

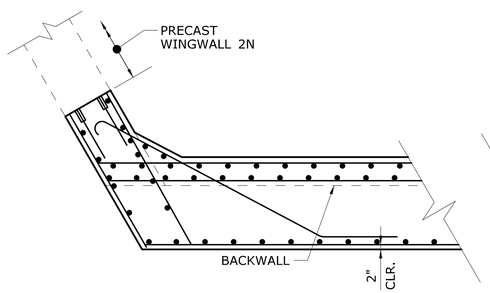

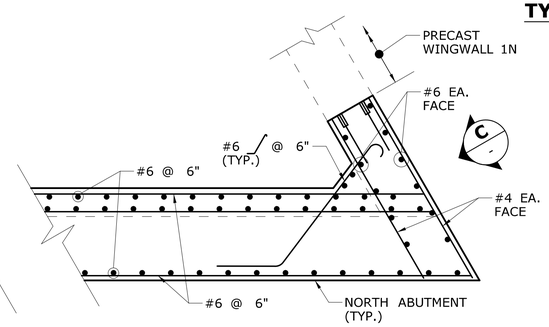

SECTION A
SCALE: ⅜" = 1'-0" (S-13)

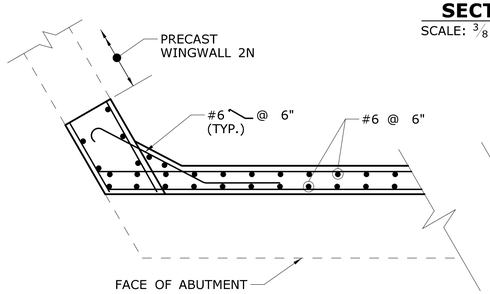

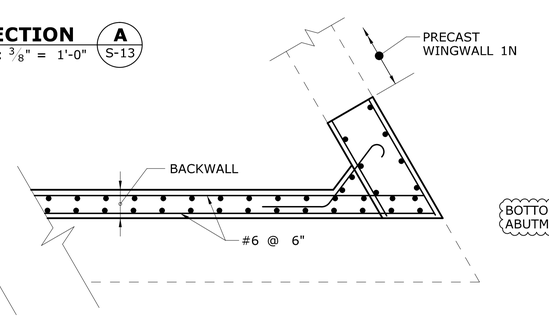

SECTION B
SCALE: ⅜" = 1'-0" (S-13)

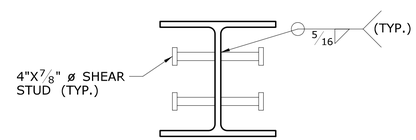

PLAN

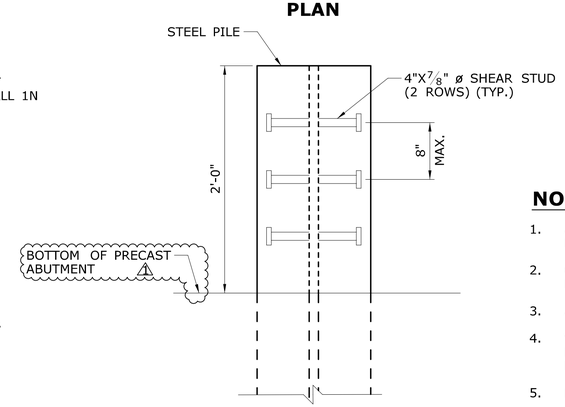

ELEVATION

PILE SHEAR STUD DETAIL
SCALE: ⅜" = 1'-0"

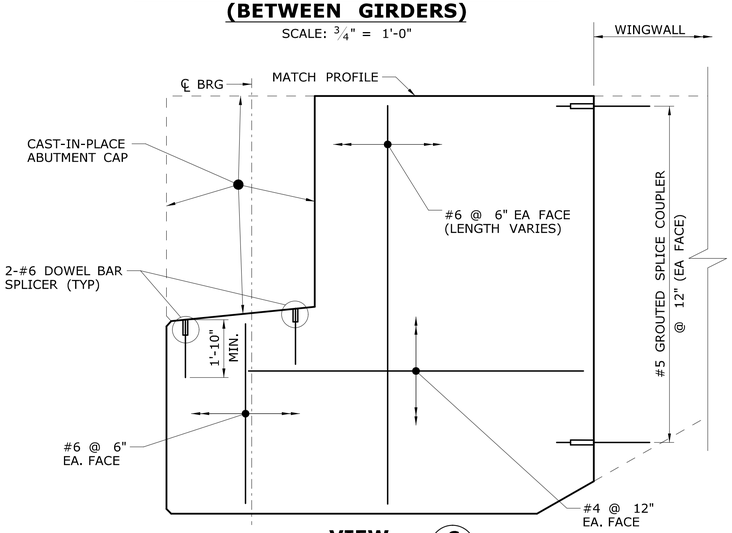

VIEW C
SCALE: ¾" = 1'-0" (-)
(EAST SHOWN, WEST SIMILAR)

NOTES:

1. ALL CONCRETE, THREADED SLEEVES, REINFORCEMENT, DOWEL BAR SPLICER SYSTEMS AND GROUTED SPLICE COUPLERS WITHIN PRECAST NORTH AND SOUTH ABUTMENT SHALL BE PAID UNDER ITEM, "PRECAST SUBSTRUCTURE ELEMENTS."
2. CAST-IN-PLACE NORTH AND SOUTH ABUTMENT CAP CONCRETE SHALL BE HIGH EARLY STRENGTH CONCRETE, AND SHALL BE PAID UNDER ITEM, "PRECAST PRECOMPRESSED CONCRETE/STEEL COMPOSITE SUPERSTRUCTURE".
3. ALL REINFORCEMENT SHALL BE ASTM A615, GRADE 60.
4. VERTICAL REINFORCEMENT AT FRONT FACE OF ABUTMENT CAP AND DOWEL BAR SPLICER EMBEDDED IN PRECAST ABUTMENT MUST BE PLACED SO AS NOT TO INTERFERE WITH GIRDER. SEE DETAIL "TYPICAL ABUTMENT REINFORCEMENT WITH GIRDER EMBEDMENT" FOR MORE INFORMATION.
5. FOR DETAILS OF APPROACH SLAB REINFORCING SEE DWG. S-22.
6. STUDS MAY BE FIELD OR SHOP WELDED AT THE OPTION OF THE CONTRACTOR AND SHALL BE PAID FOR UNDER ITEM, "FURNISHING STEEL PILES".
7. NO VEHICULAR TRAFFIC WILL BE ALLOWED ON THE SUPERSTRUCTURE UNLESS THE LONGITUDINAL CLOSURE POURS ARE CURED FOR A MINIMUM TIME AND COMPRESSIVE STRENGTH SPECIFIED IN THE SPECIAL PROVISION IS ACHIEVED.

ADDENDUM NO. 2

REV.	DATE	REVISION DESCRIPTION	SHEET NO.
1	3/24/15	ADDENDUM NO. 2 - REVISED ANCHOR ROD DIMENSION	05.16

THE INFORMATION, INCLUDING ESTIMATED QUANTITIES OF WORK, SHOWN ON THESE SHEETS IS BASED ON LIMITED INVESTIGATIONS BY THE STATE AND IS IN NO WAY WARRANTED TO INDICATE THE CONDITIONS OF ACTUAL QUANTITIES OF WORK WHICH WILL BE REQUIRED.

Plotted Date: 3/20/2015

DESIGNER/DRAFTER: G.T.G/J.G.
CHECKED BY: O.S.J
SCALE AS NOTED

STATE OF CONNECTICUT
DEPARTMENT OF TRANSPORTATION

Filename: ...\SB_MSH_117_157_ABTDETS-A2.dgn

SIGNATURE/BLOCK:
PARSONS BRINCKERHOFF
500 WINDING BROOK DR.
GLASTONBURY, CT 06033

PROJECT TITLE:
REPLACEMENT OF ROUTE 7 OVER NORWALK RIVER (BRIDGE NO. 02029)

TOWN: RIDGEFIELD

DRAWING TITLE: ABUTMENT DETAILS

PROJECT NO. 117-157
DRAWING NO. S-15
SHEET NO. 05.16.A2

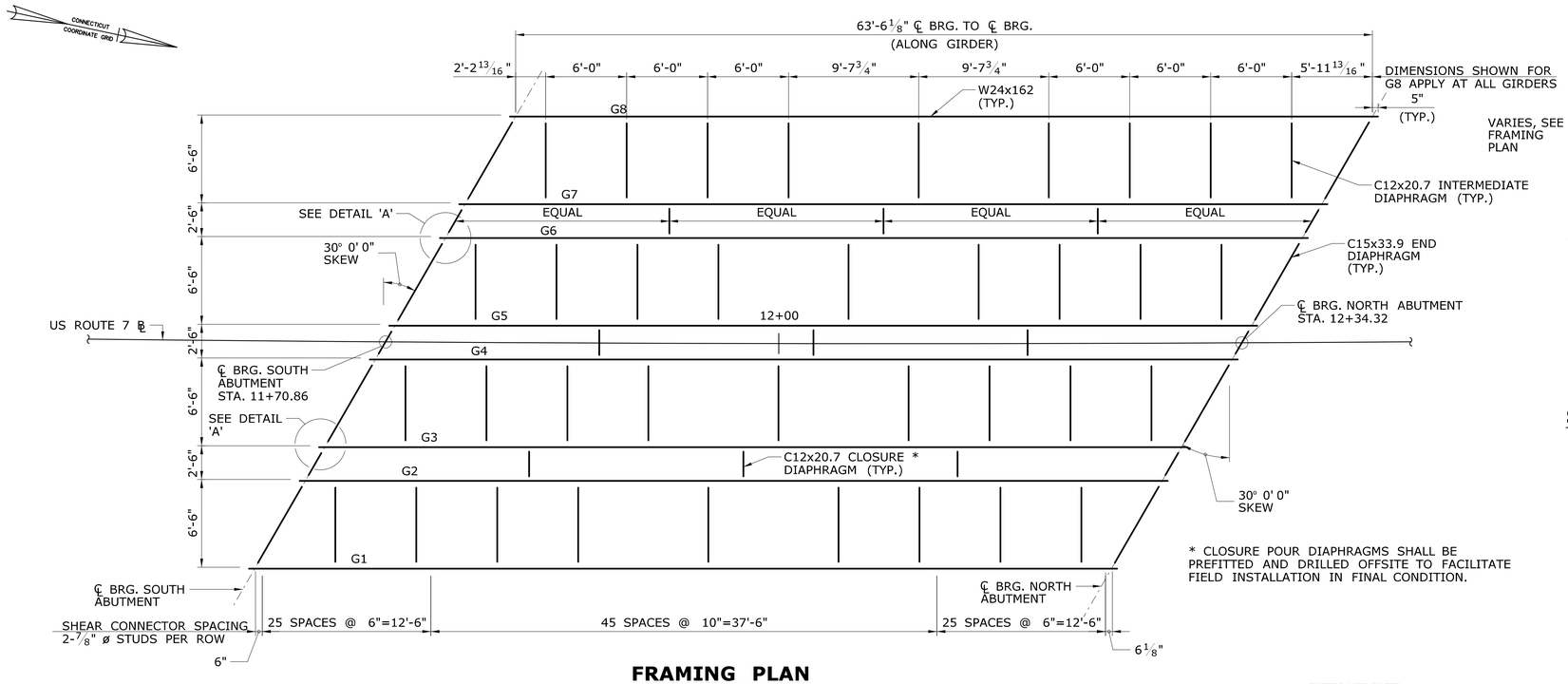

FRAMING PLAN

SCALE: 3/16" = 1'-0"

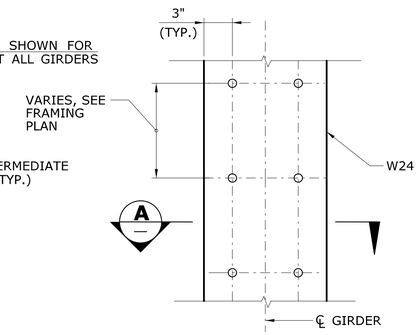

SHEAR CONNECTOR PLAN

NOT TO SCALE

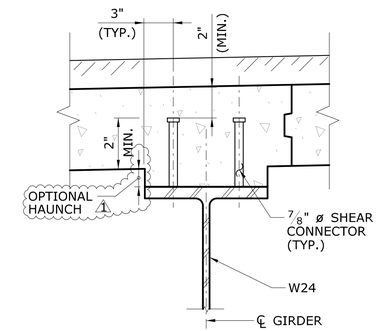

SECTION A

NOT TO SCALE

STRUCTURAL STEEL NOTES:

1. STRUCTURAL STEEL (LOW ALLOY) SHALL CONFORM TO AASHTO M270, GRADE 50 T2 AND SHALL BE GALVANIZED.
2. WELDING DETAILS, PROCEDURES AND TESTING METHODS SHALL CONFORM TO THE ANSI/AASHTO/AWS D1.5-2010 BRIDGE WELDING CODE, 6TH EDITION, WITH 2011 & 2012 INTERIM REVISIONS, UNLESS OTHERWISE NOTED ON THE PLANS.
3. FIELD SPLICES AND SHOP SPLICES IN STRUCTURAL STEEL ARE NOT ALLOWED ON THIS STRUCTURE.
4. ALL WEB TO BEARING STIFFENER AND BEARING STIFFENER TO FLANGE FILLET WELDS SHALL BE INSPECTED BY THE MAGNETIC PARTICLE METHOD.
5. MULTIPLE PASS WELDS, INSPECTED BY THE MAGNETIC PARTICLE METHOD SHALL HAVE EACH PASS OR LAYER INSPECTED AND ACCEPTED BEFORE PROCEEDING TO THE NEXT PASS OR LAYER, AS DETERMINED BY THE ENGINEER.
6. BEARING STIFFENERS AND THE ENDS OF GIRDERS SHALL BE VERTICAL AFTER THE APPLICATION OF FULL DEAD LOADS.
7. THE STRUCTURAL STEEL FABRICATORS SHALL BE CERTIFIED UNDER THE AISC QUALITY CONTROL PROGRAM AS NOTED BELOW:

   CATEGORY MBR - MAJOR STEEL BRIDGES

8. THE CONTRACTOR SHALL TAKE THE PROPER PRECAUTIONS TO ENSURE THE STABILITY OF ALL STRUCTURAL ELEMENTS UNTIL THE TOTAL STRUCTURE IS IN BEING.

HIGH STRENGTH BOLT NOTES:

1. ALL BOLTED CONNECTIONS SHALL BE "SLIP CRITICAL" CONNECTIONS WITH CLASS 'B' SURFACE CONDITIONS UNLESS OTHERWISE NOTED.
2. ALL HIGH STRENGTH BOLTS SHALL BE ASTM A325 TYPE 1 BOLTS IN STANDARD HOLES UNLESS NOTED OTHERWISE. BOLTS, NUTS AND WASHERS SHALL BE MECHANICALLY GALVANIZED IN ACCORDANCE WITH ASTM B695, CLASS 50.

FRAMING PLAN NOTES:

1. DIMENSIONS AT ENDS OF GIRDER ARE MEASURED ALONG THE ℄ OF BEARING.
2. ALL LENGTH DIMENSIONS ARE HORIZONTAL.
3. FOR GENERAL NOTES, SEE DWG. S-02.
4. FOR WORKING POINT COORDINATES, SEE DWG. S-03.

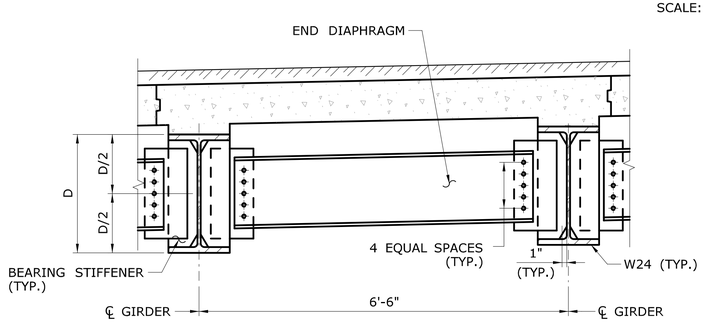

END DIAPHRAGM DETAIL

SCALE 3/4" = 1'-0"

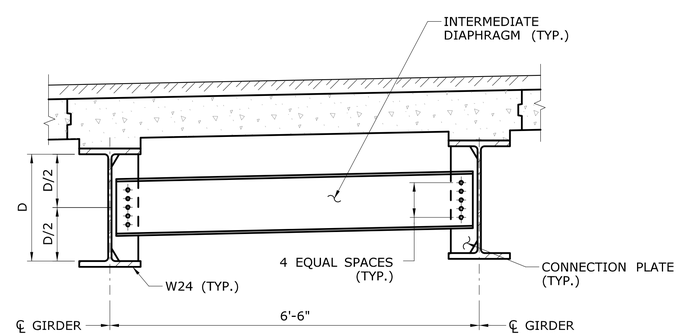

INTERMEDIATE DIAPHRAGM DETAIL

SCALE 3/4" = 1'-0"

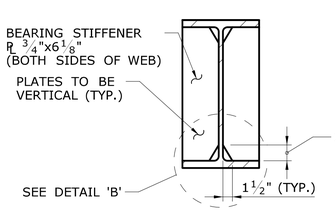

BEARING STIFFENER DETAIL

SCALE 1" = 1'-0"

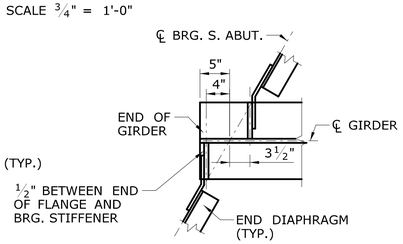

DETAIL 'A'

SCALE 1" = 1'-0"

(℄ BRG. S. ABUT. SHOWN, N. ABUT SIMILAR)

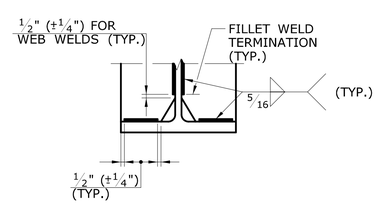

DETAIL 'B'

SCALE 1 1/2" = 1'-0"

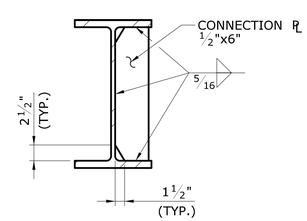

CONNECTION PLATE DETAIL

SCALE 1" = 1'-0"

DEFLECTIONS & CAMBERS

MARK	DEAD LOAD DEFLECTIONS @ C.L. OF SPAN			CAMBERS @ C.L. OF SPAN		
	STRUCTURAL STEEL	ADDITIONAL* DEAD LOAD 1	COMPOSITE DEAD LOAD	TOTAL DEAD LOAD	EXTRA	TOTAL
G1	3/8	1 3/16	3/8	1 15/16	5/8	2 5/8
G2	3/8	1 1/4	3/8	2	5/8	2 5/8
G3	3/8	1 1/4	3/8	2	5/8	2 5/8
G4	3/8	1 1/4	3/8	2	5/8	2 5/8
G5	3/8	1 1/4	3/8	2	5/8	2 5/8
G6	3/8	1 1/4	3/8	2	5/8	2 5/8
G7	3/8	1 1/4	3/8	2	5/8	2 5/8
G8	3/8	1 3/16	3/8	1 15/16	5/8	2 5/8

*ADDITIONAL DEAD LOAD INCLUDES OPTIONAL HAUNCH WEIGHT. 1

ADDENDUM NO. 2

REV.	DATE	REVISION DESCRIPTION	SHEET NO.
1	3/24/15	ADDENDUM NO. 2 - ADDED HAUNCH CALLOUT & NOTE	05.20

THE INFORMATION, INCLUDING ESTIMATED QUANTITIES OF WORK, SHOWN ON THESE SHEETS IS BASED ON LIMITED INVESTIGATIONS BY THE STATE AND IS IN NO WAY WARRANTED TO INDICATE THE CONDITIONS OF ACTUAL QUANTITIES OF WORK WHICH WILL BE REQUIRED.

Plotted Date: 3/20/2015

DESIGNER/DRAFTER: G.T.G/P.M.M.
CHECKED BY: O.S.J
0 2' 4' 8'
SCALE 3/16"=1'-0"

STATE OF CONNECTICUT
DEPARTMENT OF TRANSPORTATION

Filename: ...\SB_MSH_117_157_FRAMINGPLAN-A2.dgn

SIGNATURE/BLOCK:
PARSONS BRINCKERHOFF
500 WINDING BROOK DR.
GLASTONBURY, CT 06033

PROJECT TITLE:
REPLACEMENT OF ROUTE 7 OVER NORWALK RIVER (BRIDGE NO. 02029)

TOWN: RIDGEFIELD

DRAWING TITLE: FRAMING PLAN

PROJECT NO. 117-157
DRAWING NO. S-19
SHEET NO. 05.20.A2

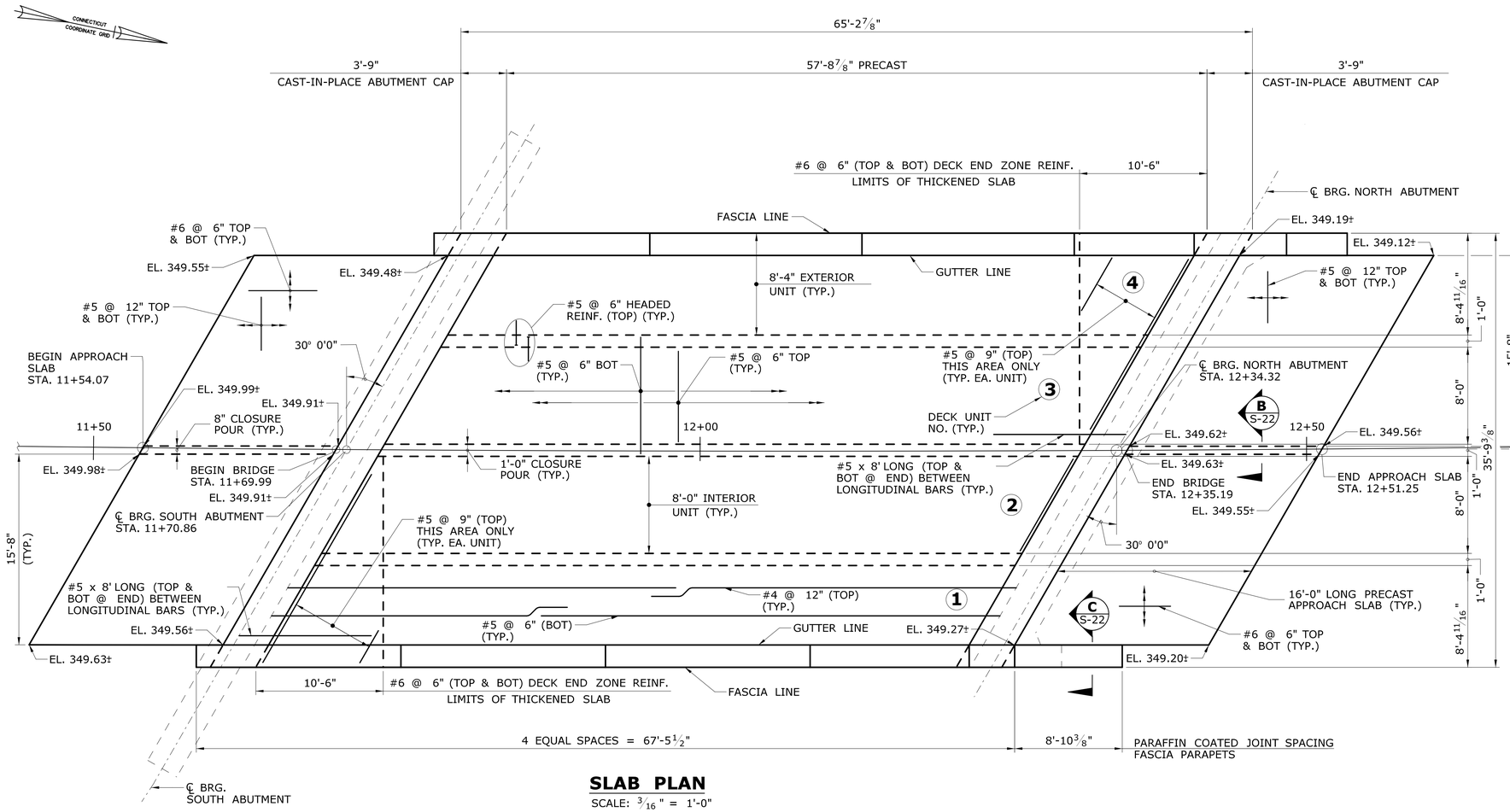

SLAB PLAN

SCALE: 3/16" = 1'-0"

NOTES:

1. FOR FINISHED SLAB ELEVATIONS, SEE DWG. S-21.
2. FOR PROFILES, SEE DWG. S-03.
3. FOR TYPICAL SLAB SECTIONS AND DETAILS, SEE DWG. S-21.
4. STEEL MEMBERS, DIAPHRAGMS AND GIRDERS NOT SHOWN IN SLAB PLAN FOR CLARITY.
5. ALL LAP SPLICES SHALL BE ALTERNATED A FULL LAP LENGTH. MINIMUM LAP SPLICES SHALL BE AS FOLLOWS:

BAR SIZE	SPLICE LENGTH (INCHES)
#4	15
#5	18
#6	22

6. FOR DETAILS OF PARAFFIN COATED JOINTS, SEE DWG. S-22.
7. FOR CLOSURE POUR DETAIL, SEE DWG. S-21.
8. FOR CLOSURE POUR REINFORCEMENT DETAILS SEE DWG. S-22.
9. MEMBRANE WATERPROOFING (COLD LIQUID ELASTOMERIC) SHALL BE APPLIED TO ENTIRE DECK AND APPROACH SLAB SURFACE, INCLUDING 3" RISE ON FACE OF PARAPET CURB.
10. FOR DETAILS OF PARAPET REINFORCING AT EAST AND WEST FASCIA SEE DWG. S-22.
11. NO VEHICULAR TRAFFIC WILL BE ALLOWED ON THE SUPERSTRUCTURE UNLESS THE LONGITUDINAL CLOSURE POURS ARE CURED FOR A MINIMUM TIME AND THE COMPRESSIVE STRENGTH SPECIFIED IN SPECIAL PROVISION IS ACHIEVED.
12. HAUNCH SHOWN IS OPTIONAL. THE CONTRACTOR MAY CHOOSE TO FABRICATE THE PRECAST SUPERSTRUCTURE UNITS WITHOUT HAUNCHES AT NO ADDITIONAL COST TO THE DEPARTMENT. THE CONTRACTOR IS RESPONSIBLE FOR MAKING ANY AND ALL NECESSARY ADJUSTMENTS, AND SHALL INDICATE THESE ON THE SHOP DRAWINGS. 1

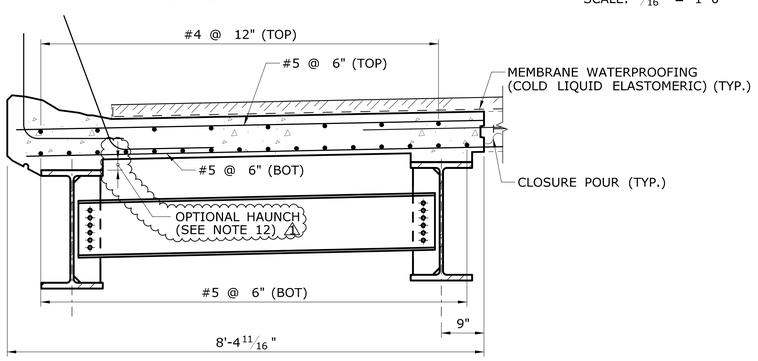

UNIT 4 DETAIL

SCALE: 3/4" = 1'-0"

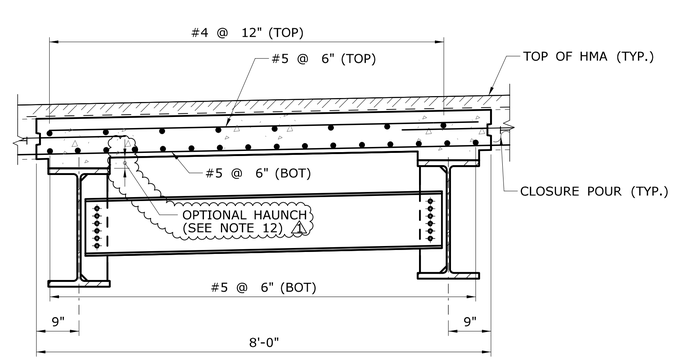

UNIT 2/3 DETAIL

SCALE: 3/4" = 1'-0"

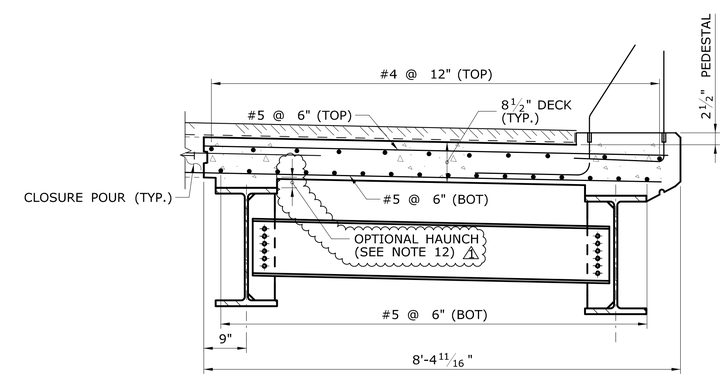

UNIT 1 DETAIL

SCALE: 3/4" = 1'-0"

ADDENDUM NO. 2

REV.	DATE	REVISION DESCRIPTION	SHEET NO.
1	3/24/15	ADDENDUM NO. 2 - ADDED HAUNCH CALLOUT & NOTE	05.21

THE INFORMATION, INCLUDING ESTIMATED QUANTITIES OF WORK, SHOWN ON THESE SHEETS IS BASED ON LIMITED INVESTIGATIONS BY THE STATE AND IS IN NO WAY WARRANTED TO INDICATE THE CONDITIONS OF ACTUAL QUANTITIES OF WORK WHICH WILL BE REQUIRED.

Plotted Date: 3/23/2015

DESIGNER/DRAFTER: G.T.G/J.G.
CHECKED BY: O.S.J
SCALE AS NOTED

STATE OF CONNECTICUT
DEPARTMENT OF TRANSPORTATION

Filename: ...\SB_MSH_117_157_DECKPLAN-A2.dgn

SIGNATURE/BLOCK: STATE OF CONNECTICUT HIGHWAY ENGINEER NO. 20980 LICENSED PROFESSIONAL ENGINEER

PARSONS BRINCKERHOFF
500 WINDING BROOK DR.
GLASTONBURY, CT 06033

PROJECT TITLE: REPLACEMENT OF ROUTE 7 OVER NORWALK RIVER (BRIDGE NO. 02029)

TOWN: RIDGEFIELD

DRAWING TITLE: SLAB PLAN

PROJECT NO. 117-157
DRAWING NO. S-20
SHEET NO. 05.21.A2

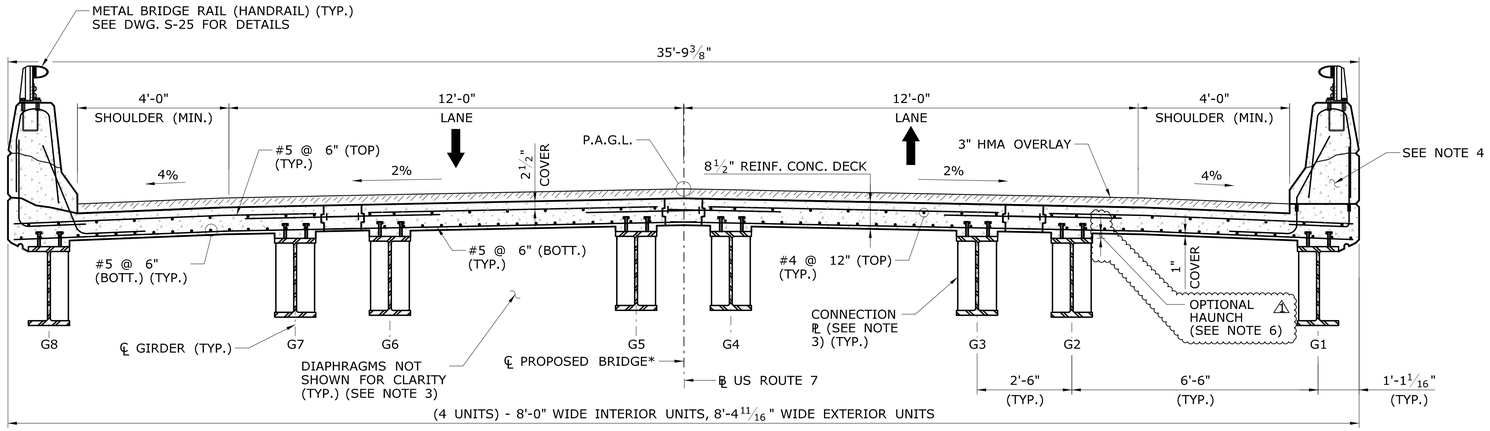

TYPICAL PROPOSED BRIDGE CROSS SECTION @ MIDSPAN

SCALE : 1/2" = 1'-0"

*DISTANCE FROM ℄ OF PROPOSED BRIDGE TO US ROUTE 7 ℄ VARIES OVER LENGTH OF BRIDGE, MINIMUM DISTANCE IS 1/4" AT ℄ BRG. NORTH ABUTMENT.

P.A.G.L. - POINT OF APPLICATION OF GRADE

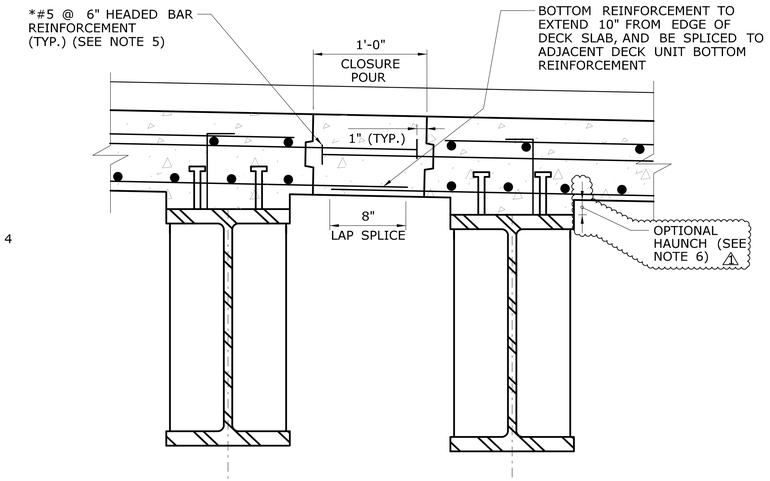

CLOSURE POUR DETAIL

SCALE : 1 1/2" = 1'-0"

*CONTRACTOR TO COORDINATE THE PLACEMENT OF REINFORCEMENT WITHIN PRECAST PRECOMPRESSED CONCRETE/STEEL COMPOSITE SUPERSTRUCTURE UNITS DURING FABRICATION SO AS TO AVOID ANY CONFLICTS WITH HEADED BAR REINFORCEMENT WITHIN THE LONGITUDINAL CLOSURE POURS.

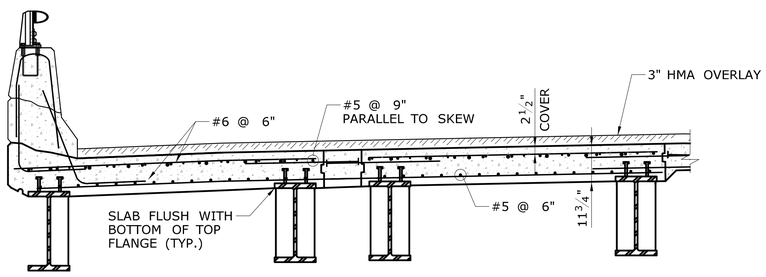

TYPICAL PROPOSED BRIDGE CROSS SECTION @ DECK END ZONE

SCALE : 1/2" = 1'-0"

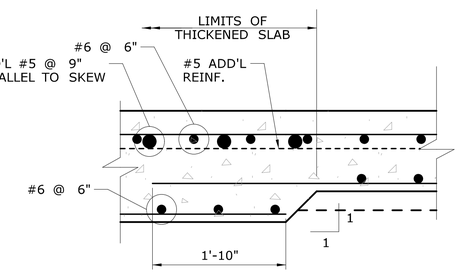

THICKENED SLAB TRANSITION DETAIL

SCALE : 1 1/2" = 1'-0"

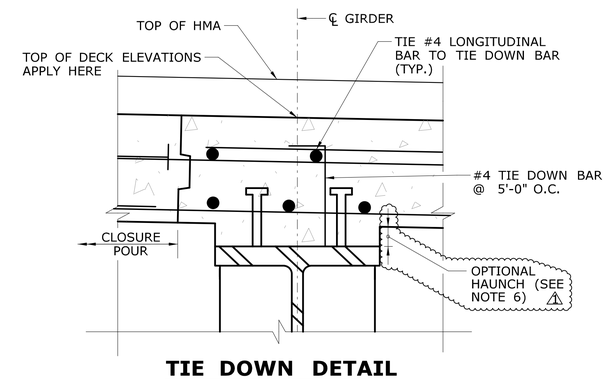

TIE DOWN DETAIL

SCALE : 2" = 1'-0"

TIE DOWN NOTES:

1. TIE-DOWN BARS DO NOT EXCLUDE THE USE OF CHAIRS FOR SUPPORTING THE REINFORCEMENT MAT.
2. THE COST OF FURNISHING AND PLACING TIE-DOWN BARS SHALL BE INCLUDED IN THE CONTRACT ITEM "PRECAST PRECOMPRESSED CONCRETE/STEEL COMPOSITE SUPERSTRUCTURE".
3. TIE-DOWN BARS AND LONGITUDINAL BARS SHALL CLEAR THE SHEAR CONNECTORS.

NOTES:

1. ALL REINFORCEMENT IN THE DECK SHALL BE EPOXY COATED AND SHALL BE PAID UNDER ITEM, "PRECAST PRECOMPRESSED CONCRETE/STEEL COMPOSITE SUPERSTRUCTURE".
2. FOR ADDITIONAL SLAB DETAILS, SEE DWGS. S-20 AND S-22.
3. FOR DETAILS OF CONNECTION PLATES AND DIAPHRAGMS SEE DWG. S-19.
4. FOR DETAILS OF PARAPET REINFORCEMENT SEE DWG. S-22.
5. FOR FURTHER DETAILS OF HEADED BAR REINFORCEMENT IN CLOSURE POUR SEE DWG. S-22.
6. HAUNCH SHOWN IS OPTIONAL. THE CONTRACTOR MAY CHOOSE TO FABRICATE THE PRECAST SUPERSTRUCTURE UNITS WITHOUT HAUNCHES AT NO ADDITIONAL COST TO THE DEPARTMENT. THE CONTRACTOR IS RESPONSIBLE FOR MAKING ANY AND ALL NECESSARY ADJUSTMENTS, AND SHALL INDICATE THESE ON THE SHOP DRAWINGS. (△1)

TOP OF DECK ELEVATIONS ALONG ℄ OF GIRDERS

GIRDER	INCREMENT	℄ BRG S. ABUTMENT	1/11	2/11	3/11	4/11	5/11	6/11	7/11	8/11	9/11	10/11	℄ BRG N. ABUTMENT
1	5.293	349.53	349.51	349.48	349.46	349.44	349.41	349.39	349.37	349.34	349.32	349.51	349.27
2	5.293	349.72	349.69	349.67	349.65	349.62	349.60	349.58	349.55	349.53	349.51	349.48	349.46
3	5.293	349.76	349.74	349.71	349.69	349.67	349.64	349.62	349.60	349.57	349.55	349.53	349.50
4	5.293	349.88	349.85	349.83	349.81	349.78	349.76	349.74	349.71	349.69	349.67	349.64	349.62
5	5.293	349.87	349.85	349.82	349.80	349.78	349.75	349.73	349.71	349.68	349.66	349.64	349.62
6	5.293	349.72	349.70	349.68	349.65	349.63	349.61	349.58	349.56	349.54	349.51	349.49	349.47
7	5.293	349.67	349.64	349.62	349.60	349.57	349.55	349.53	349.50	349.48	349.46	349.44	349.41
8	5.293	349.46	349.43	349.41	349.39	349.36	349.34	349.32	349.29	349.27	349.25	349.22	349.20

ADDENDUM NO. 2

REV.	DATE	REVISION DESCRIPTION	SHEET NO.
△1	3/24/15	ADDENDUM NO. 2 - ADDED HAUNCH CALLOUT & NOTE	05.22

THE INFORMATION, INCLUDING ESTIMATED QUANTITIES OF WORK, SHOWN ON THESE SHEETS IS BASED ON LIMITED INVESTIGATIONS BY THE STATE AND IS IN NO WAY WARRANTED TO INDICATE THE CONDITIONS OF ACTUAL QUANTITIES OF WORK WHICH WILL BE REQUIRED.

Plotted Date: 3/23/2015

DESIGNER/DRAFTER: G.T.G/J.G
CHECKED BY: O.S.J
SCALE AS NOTED

STATE OF CONNECTICUT
DEPARTMENT OF TRANSPORTATION

Filename: ...\SB_MSH_117_157_XSEC-A2.dgn

SIGNATURE/BLOCK: STATE OF CONNECTICUT OSCAR SANCHEZ JR. No. 20980 LICENSED PROFESSIONAL ENGINEER

PARSONS BRINCKERHOFF
500 WINDING BROOK DR.
GLASTONBURY, CT 06033

PROJECT TITLE: REPLACEMENT OF ROUTE 7 OVER NORWALK RIVER (BRIDGE NO. 02029)

TOWN: RIDGEFIELD

DRAWING TITLE: SLAB DETAILS SHEET 1 OF 2

PROJECT NO. 117-157
DRAWING NO. S-21
SHEET NO. 05.22.A2

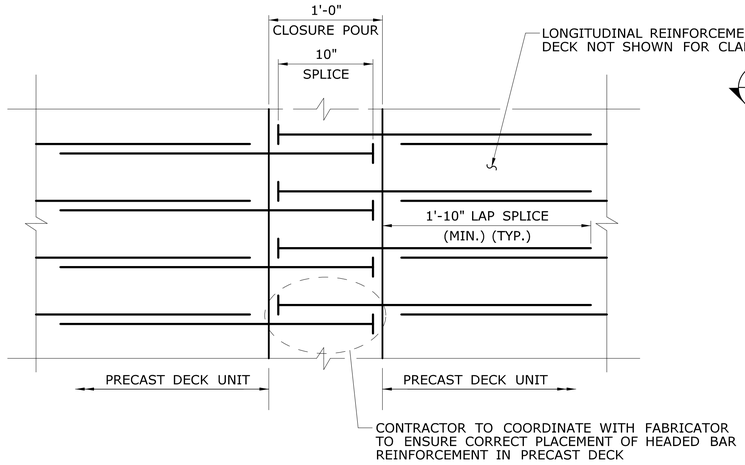

TOP MAT HEADED BAR REINFORCEMENT DETAIL PLAN

SCALE: $1\frac{1}{2}$" = 1'-0"

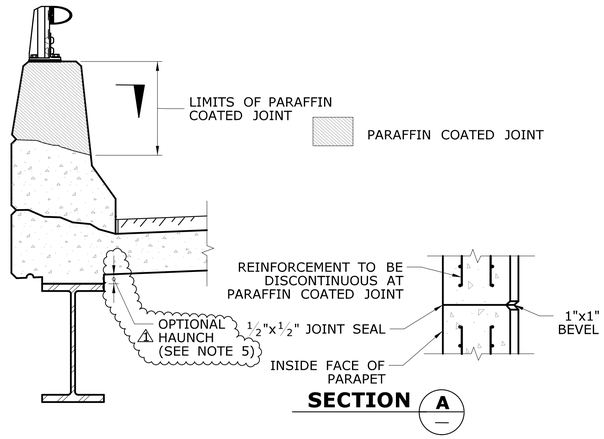

PARAFFIN COATED JOINT DETAILS

SCALE: $\frac{3}{4}$" = 1'-0"

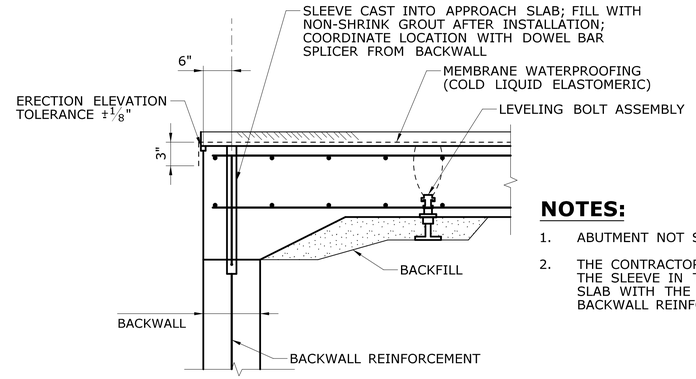

APPROACH SLAB AT ABUTMENT

SCALE: $\frac{3}{4}$" = 1'-0"

NOTES:

1. ABUTMENT NOT SHOWN FOR CLARITY.
2. THE CONTRACTOR SHALL VERIFY FIT OF THE SLEEVE IN THE PRECAST APPROACH SLAB WITH THE LOCATION OF BACKWALL REINFORCEMENT.

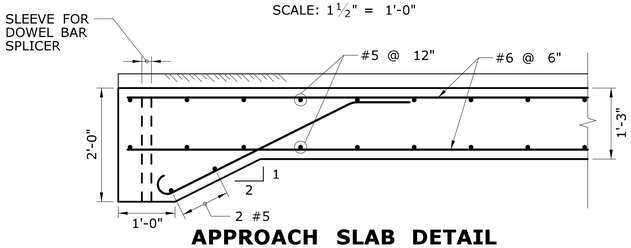

APPROACH SLAB DETAIL

SCALE: $\frac{3}{4}$" = 1'-0"

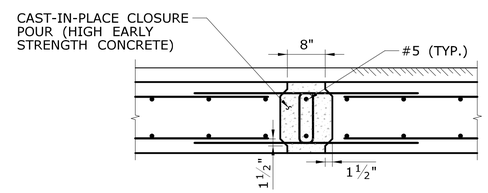

SECTION B

SCALE: $\frac{3}{4}$" = 1'-0" S-20

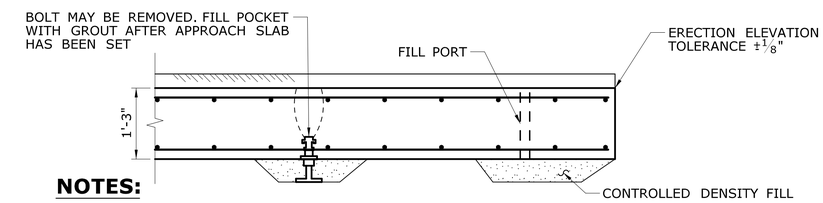

NOTES:

1. EXCAVATE TRENCH UNDER END OF APPROACH SLAB END PRIOR TO INSTALLATION.
2. SET APPROACH SLAB ON GRADE. ADJUST ELEVATIONS USING LEVELING DEVICE. SHIMS MAY BE USED IN LIEU OF LEVELING BOLTS.
3. FILL VOID UNDER SLAB END WITH CONTROLLED DENSITY FILL THROUGH EXCAVATION AND PORTS IN SLAB.
4. CONSTRUCT APPROACH ROADWAY AND OVERLAY.
5. ALL WORK SHOWN FOR PRECAST APPROACH SLAB IS INCLUDED IN ITEM "PRECAST APPROACH SLAB".

APPROACH SLAB AT END

SCALE: $\frac{3}{4}$" = 1'-0"

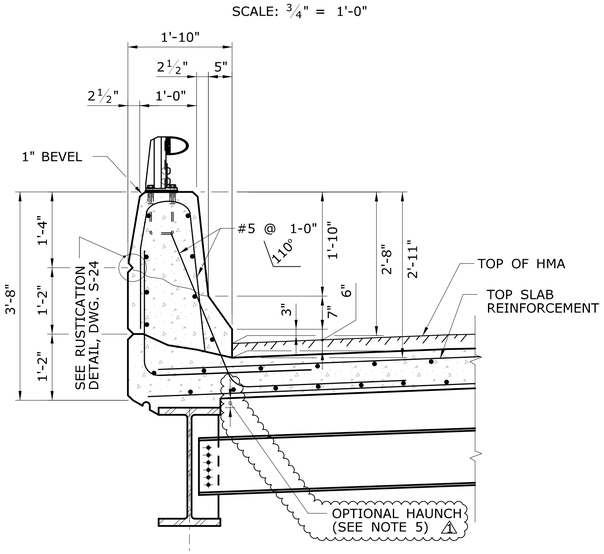

WEST FASCIA PARAPET SECTION

SCALE: $\frac{3}{4}$" = 1'-0"

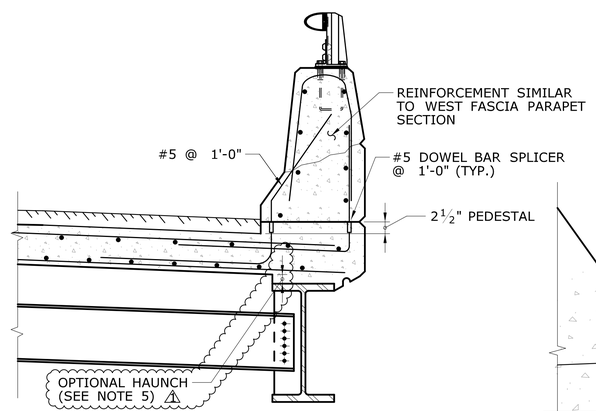

EAST FASCIA PARAPET SECTION

SCALE: $\frac{3}{4}$" = 1'-0"

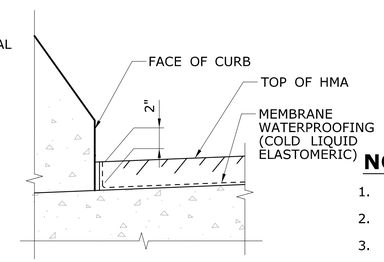

MEMBRANE WATERPROOFING AT GUTTERLINE

SCALE: $1\frac{1}{2}$" = 1' 0"

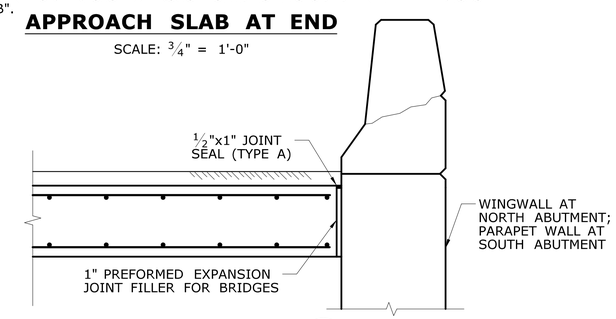

SECTION C

SCALE: $\frac{3}{4}$" = 1'-0" S-20

NOTES:

1. ALL REINFORCEMENT IN DECK SHALL BE EPOXY COATED.
2. FOR STEEL NOTES, SEE DWG. S-19.
3. FOR PROFILES, SEE DWG. S-03.
4. FOR ADDITIONAL SLAB DETAILS SEE DWGS. S-20 AND S-21.
5. HAUNCH SHOWN IS OPTIONAL. THE CONTRACTOR MAY CHOOSE TO FABRICATE THE PRECAST SUPERSTRUCTURE UNITS WITHOUT HAUNCHES AT NO ADDITIONAL COST TO THE DEPARTMENT. THE CONTRACTOR IS RESPONSIBLE FOR MAKING ANY AND ALL NECESSARY ADJUSTMENTS, AND SHALL INDICATE THESE ON THE SHOP DRAWINGS.

ADDENDUM NO. 2

REV.	DATE	REVISION DESCRIPTION	SHEET NO.
1	3/24/15	ADDENDUM NO. 2 - ADDED HAUNCH CALLOUT & NOTE	05.23

THE INFORMATION, INCLUDING ESTIMATED QUANTITIES OF WORK, SHOWN ON THESE SHEETS IS BASED ON LIMITED INVESTIGATIONS BY THE STATE AND IS IN NO WAY WARRANTED TO INDICATE THE CONDITIONS OF ACTUAL QUANTITIES OF WORK WHICH WILL BE REQUIRED.

Plotted Date: 3/23/2015

DESIGNER/DRAFTER: G.T.G/P.M.M.
CHECKED BY: O.S.J.
NOT TO SCALE

STATE OF CONNECTICUT
DEPARTMENT OF TRANSPORTATION

Filename: ...\SB_MSH_117_157_SLABDET-A2.dgn

SIGNATURE/BLOCK: STATE OF CONNECTICUT, THOMAS R. LALIBERTE, No. 20860, LICENSED PROFESSIONAL ENGINEER

PARSONS BRINCKERHOFF
500 WINDING BROOK DR.
GLASTONBURY, CT 06033

PROJECT TITLE: REPLACEMENT OF ROUTE 7 OVER NORWALK RIVER (BRIDGE NO. 02029)

TOWN: RIDGEFIELD

DRAWING TITLE: SLAB DETAILS SHEET 2 OF 2

PROJECT NO. 117-157
DRAWING NO. S-22
SHEET NO. 05.23.A2