SUBSET 05 - BRIDGE
INDEX OF DRAWINGS

DRAWING NUMBER	DRAWING TITLE	DRAWING NUMBER	DRAWING TITLE
S-01	GENERAL PLAN	S-21	SLAB DETAILS SHEET 1 OF 2
S-02	GENERAL NOTES	S-22	SLAB DETAILS SHEET 2 OF 2
S-03	BRIDGE LAYOUT PLAN AND PROFILE	S-23	PRECAST TOLERANCES
S-04	BORING LOGS - PB-1	S-24	LEADING END PARAPET DETAIL
S-05	BORING LOGS - PB-2	S-25	BRIDGE RAIL HANDRAIL DETAILS
S-06	CONSTRUCTION SEQUENCE - 1	S-26	TEMPORARY PRECAST BARRIER CURB DETAILS
S-07	CONSTRUCTION SEQUENCE - 2		
S-08	CONSTRUCTION SEQUENCE - 3		
S-09	STAGING DETAILS 1		
S-10	STAGING DETAILS 2		
S-11	DEMOLITION PLAN		
S-12	DEMOLITION DETAILS		
S-13	NORTH ABUTMENT PLAN AND ELEVATION		
S-14	SOUTH ABUTMENT PLAN AND ELEVATION		
S-15	ABUTMENT DETAILS		
S-16	PRECAST WINGWALLS 1N & 2N		
S-17	PRECAST WINGWALLS 1S & 2S		
S-18	PRECAST WINGWALL SECTIONS		
S-19	FRAMING PLAN		
S-20	SLAB PLAN		

DESIGNED BY:
PARSONS BRINCKERHOFF

Anthony A Moretti
PB Americas, Inc.
2014.12.10
14:37:36 -05'00'

DESIGNED BY:
VB TECHNOLOGIES CORPORATION

Nikhil S Vyas
VB Tech. Corp.
2014.12.10
19:18:39
-05'00'

REV.	DATE	REVISION DESCRIPTION	SHEET NO.

THE INFORMATION, INCLUDING ESTIMATED QUANTITIES OF WORK, SHOWN ON THESE SHEETS IS BASED ON LIMITED INVESTIGATIONS BY THE STATE AND IS IN NO WAY WARRANTED TO INDICATE THE CONDITIONS OF ACTUAL QUANTITIES OF WORK WHICH WILL BE REQUIRED.

Plotted Date: 12/10/2014

DESIGNER/DRAFTER: O.S.J/G.T.G
CHECKED BY: T.R.L

STATE OF CONNECTICUT
DEPARTMENT OF TRANSPORTATION

Filename: ...\05-BRIDGE-SSCOVER..0117..0157..SS-05.dgn

SIGNATURE/
BLOCK:

PROJECT TITLE:
REPLACEMENT OF ROUTE 7
OVER NORWALK RIVER
(BRIDGE NO. 02029)

TOWN: RIDGEFIELD

DRAWING TITLE:
BRIDGE
SUBSET COVER SHEET

PROJECT NO. 117-157
DRAWING NO. SS-05
SHEET NO. 05.01

Connecticut Department of Transportation
QA/QC Format Check

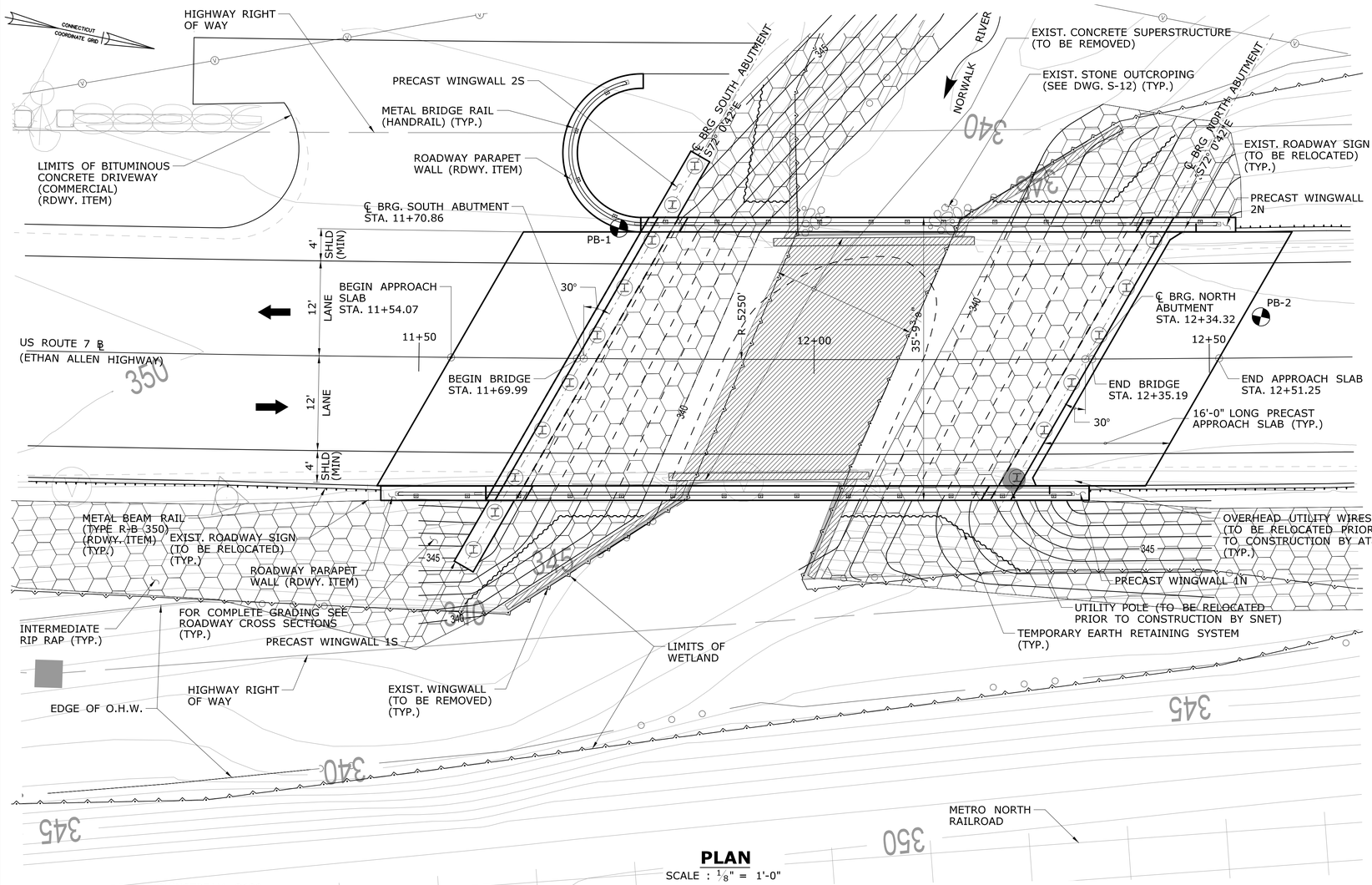

PLAN

SCALE : 1/8" = 1'-0"

TABLE OF QUANTITIES

ITEM	UNITS	QUANTITY
STRUCTURE EXCAVATION - EARTH (COMPLETE)	CY	1345
PERVIOUS STRUCTURE BACKFILL	CY	150
HMA S0.5	TON	60
HMA S0.25	TON	26
REMOVAL OF SUPERSTRUCTURE	L.S.	1
PRECAST PRECOMPRESSED CONCRETE/STEEL COMPOSITE SUPERSTRUCTURE	SF	2275
PRECAST APPROACH SLAB	SY	115
CLASS "F" CONCRETE	CY	40
PRECAST SUBSTRUCTURE ELEMENTS	CY	58
DEFORMED STEEL BARS - EPOXY COATED	LB	2600
FURNISHING STEEL PILES	LB	54100
DRIVING STEEL PILES	LF	730
POINT REINFORCEMENT FOR STEEL PILES	EA.	16
TEST PILE (STEEL HP12x74 - 52' LONG)	EA.	1
DYNAMIC PILE DRIVING ANALYSIS (P.D.A) TEST	EA.	1
MEMBRANE WATERPROOFING (COLD LIQUID ELASTOMERIC)	SY	365
DAMPPROOFING	SY	110
TEMPORARY EARTH RETAINING SYSTEM	SF	880
TEMPORARY PRECAST CONCRETE BARRIER CURB (STRUCTURE)	LF	160
RELOCATE TEMPORARY PRECAST CONCRETE BARRIER CURB (STRUCTURE)	LF	80
METAL BRIDGE RAIL (HANDRAIL)	LF	200
REMOVAL OF EXISTING MASONRY	CY	120

CONCRETE DISTRIBUTION

ITEM	UNITS	QUANTITY
SUPERSTRUCTURE	YD³	190
SUBSTRUCTURE	YD³	75
	TOTAL:	265

INSPECTION OF FIELD WELDS

METHOD	UNITS	QUANTITY
ULTRASONIC	IN.	-
MAGNETIC PARTICLE	FT	-

CURVE DATA

U.S. ROUTE 7
PC STA. 10+50.00
PT STA. 15+75.00

△ = 5° 43'46.5"
R = 5250.00'
T = 262.72'
L = 525.00'

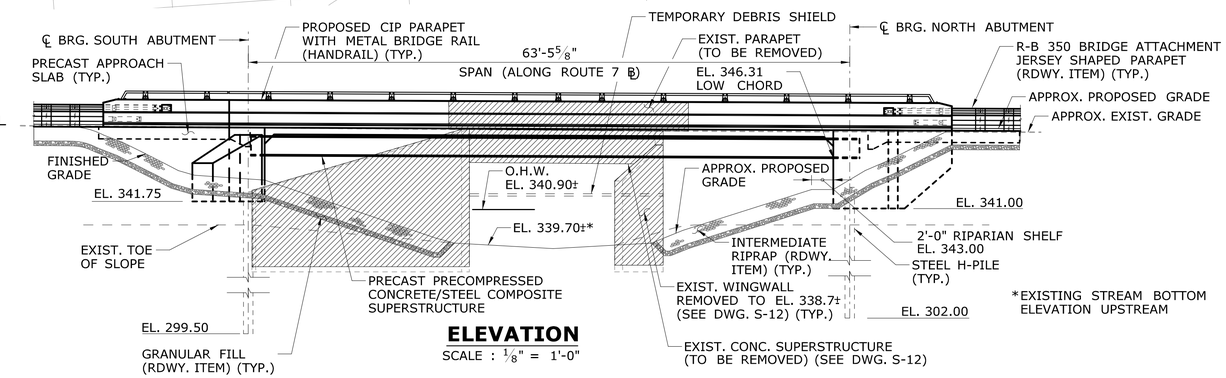

ELEVATION

SCALE : 1/8" = 1'-0"

LEGEND

NEW BORING

REMOVAL OF EXISTING BRIDGE

NOTICE TO BRIDGE INSPECTORS

THE DEPARTMENT'S BRIDGE SAFETY PROCEDURES REQUIRE THIS BRIDGE TO BE INSPECTED FOR, BUT NOT LIMITED TO, ALL APPROPRIATE COMPONENTS INDICATED IN THE GOVERNING MANUALS FOR BRIDGE INSPECTION. ATTENTION MUST BE GIVEN TO INSPECTING THE FOLLOWING SPECIAL COMPONENTS AND DETAILS. (THE LISTING FOR COMPONENTS FOR SPECIFIC ATTENTION SHALL NOT BE CONSTRUED TO REDUCE THE IMPORTANCE OF ANY OTHER COMPONENT OF THE STRUCTURE.) THE FREQUENCY OF INSPECTION OF THIS STRUCTURE SHALL BE IN ACCORDANCE WITH THE GOVERNING MANUALS FOR BRIDGE INSPECTION, UNLESS OTHERWISE DIRECTED BY THE MANAGER OF BRIDGE SAFETY AND EVALUATION.

COMPONENT OR DETAIL	STRUCTURE REFERENCE SHEET
NONE	----------

REV.	DATE	REVISION DESCRIPTION	SHEET NO.

THE INFORMATION, INCLUDING ESTIMATED QUANTITIES OF WORK, SHOWN ON THESE SHEETS IS BASED ON LIMITED INVESTIGATIONS BY THE STATE AND IS IN NO WAY WARRANTED TO INDICATE THE CONDITIONS OF ACTUAL QUANTITIES OF WORK WHICH WILL BE REQUIRED.

Plotted Date: 12/10/2014

DESIGNER/DRAFTER: G.T.G
CHECKED BY: O.S.J
SCALE AS NOTED

STATE OF CONNECTICUT
DEPARTMENT OF TRANSPORTATION

Filename: ...\SB_MSH_117_157_GPN.dgn

SIGNATURE/BLOCK:
STATE OF CONNECTICUT · OLIVER R. LAHOUD · No. 20890 · LICENSED · PROFESSIONAL ENGINEER

PARSONS BRINCKERHOFF
500 WINDING BROOK DR.
GLASTONBURY, CT 06033

PROJECT TITLE:
REPLACEMENT OF ROUTE 7 OVER NORWALK RIVER (BRIDGE NO. 02029)

TOWN: RIDGEFIELD

DRAWING TITLE: GENERAL PLAN

PROJECT NO. 117-157
DRAWING NO. S-01
SHEET NO. 05.02

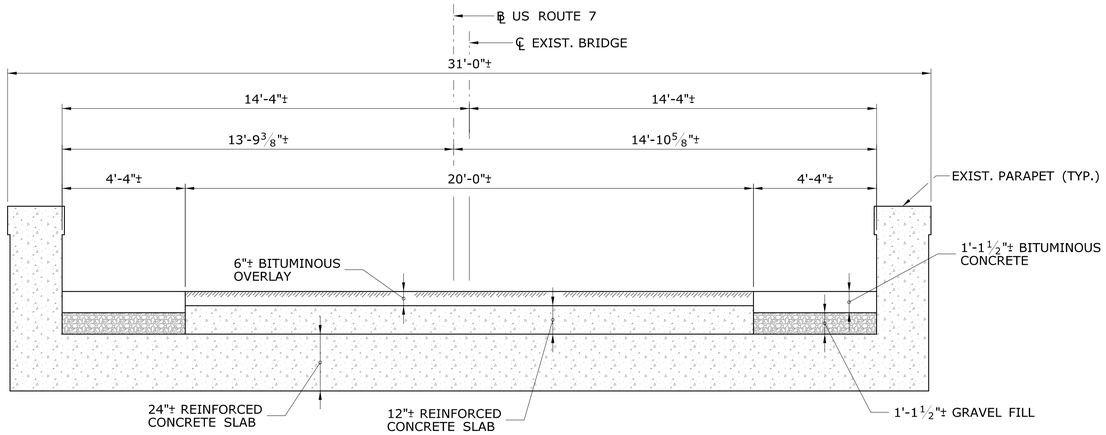

EXISTING BRIDGE SECTION

SCALE : 3/8" = 1'-0"

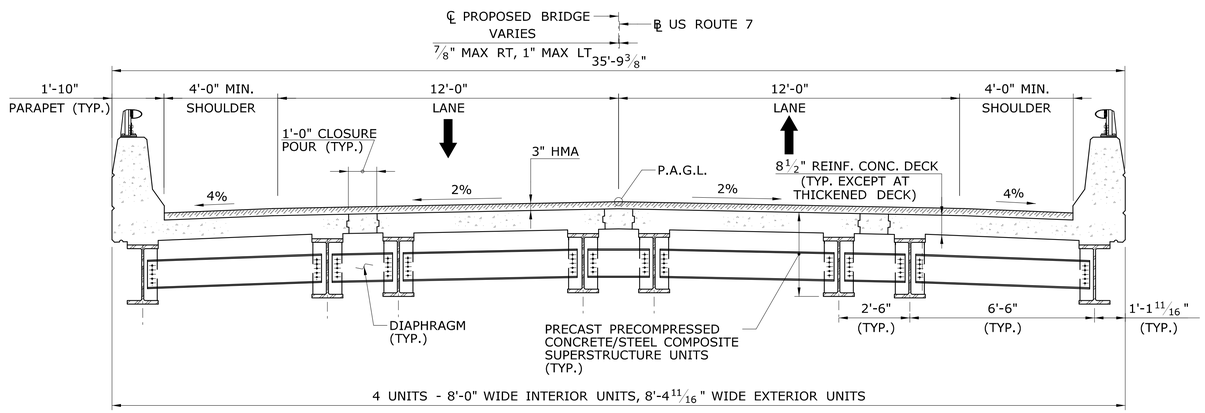

TYPICAL PROPOSED BRIDGE SECTION

SCALE : 3/8" = 1'-0"

HYDRAULIC DATA

DRAINAGE AREA	8.35 SQ. MI.
DESIGN FREQUENCY	100-YEAR
DESIGN DISCHARGE	1595 CFS
AVERAGE DAILY FLOW ELEVATION	341.6 FT u/s, 340.0 FT d/s
UPSTREAM DESIGN WATER SURFACE ELEVATION	EL. 350.44
DOWNSTREAM DESIGN WATER SURFACE ELEVATION	EL. 349.85
MAXIMUM SCOUR ELEVATION	EL. 320.20
FREQUENCY	100-YEAR
DISCHARGE	1595 CFS
WORST CASE SCOUR SUBSTRUCTURE UNIT	SOUTH ABUTMENT

TRANSPORTATION DIMENSION AND WEIGHT

MEMBER	MAX. SHIPPING LENGTH	MAX. SHIPPING HEIGHT	MAX. SHIPPING WIDTH	SHIPPING WEIGHT
PRECAST PRECOMPRESSED CONCRETE/STEEL COMPOSITE SUPERSTRUCTURE UNITS	64'-3"	3'-0"	8'-5"	94,000 LBS
PRECAST SUBSTRUCTURE ELEMENTS (NORTH ABUTMENT)	44'-0"	8'-5"	6'-6"	115,000 LBS
PRECAST APPROACH SLAB	18'-2"	2'-0"	16'-0"	55,000 LBS

GENERAL NOTES

SPECIFICATIONS: CONNECTICUT DEPARTMENT OF TRANSPORTATION FORM 816 (2004). SUPPLEMENTAL SPECIFICATION DATED JULY 2014 AND SPECIAL PROVISIONS.

DESIGN SPECIFICATIONS: AASHTO LRFD BRIDGE DESIGN SPECIFICATIONS, SIXTH EDITION, 2012 AS SUPPLEMENTED BY THE CONNECTICUT DEPARTMENT OF TRANSPORTATION BRIDGE MANUAL (2003) WITH INTERIM SPECIFICATION UP TO AND INCLUDING 2014.

ALLOWABLE DESIGN STRESSES:

CLASS "A" CONCRETE	BASED ON f'c = 3300 PSI
CLASS "F" CONCRETE	BASED ON f'c = 4400 PSI
HIGH EARLY STRENGTH CONCRETE	BASED ON f'c = 5000 PSI
REINFORCEMENT (ASTM A615 GRADE 60)	Fy = 60000 PSI
STRUCTURAL STEEL AASHTO (M270, GRADE 50)	Fy = 50000 PSI

NOTE: THE SPECIFIED CONCRETE STRENGTH USED IN DESIGN, F'c, OF THE CONCRETE COMPONENTS IS NOTED ABOVE. THE MINIMUM COMPRESSIVE STRENGTH OF THE CONCRETE IN THE CONSTRUCTED COMPONENTS SHALL CONFORM TO THE REQUIREMENTS OF "SECTION 6.01 CONCRETE FOR STRUCTURES".

LIVE LOAD: HL-93

FUTURE PAVING ALLOWANCE: NONE

STRUCTURAL STEEL: STRUCTURAL STEEL (LOW ALLOY) SHALL CONFORM TO AASHTO M270, GRADE 50 AND SHALL BE HOT DIPPED GALVANIZED AFTER FABRICATION.

BITUMINOUS CONCRETE OVERLAY: THE TOTAL THICKNESS SHALL BE 3". BOTTOM COURSE THICKNESS SHALL CONSIST OF 1" HMA S0.25, AND THE TOP COURSE THICKNESS SHALL CONSIST OF 2" OF HMA S0.5.

PILE LOADS: THE VARIOUS GROUP LOADINGS NOTED ON THE SUBSTRUCTURE PLAN SHEETS REFER TO THE GROUP LOADS AS GIVEN IN THE AASHTO LRFD BRIDGE DESIGN SPECIFICATIONS.

DIMENSIONS: WHEN DECIMAL DIMENSIONS ARE GIVEN TO LESS THAN THREE DECIMAL PLACES, THE OMITTED DIGITS SHALL BE ASSUMED TO BE ZERO.

EXISTING DIMENSIONS AND ELEVATIONS: DIMENSIONS AND ELEVATIONS OF THE EXISTING STRUCTURE SHOWN ON THESE PLANS ARE FOR GENERAL REFERENCE ONLY. THEY HAVE BEEN TAKEN FROM THE ORIGINAL DESIGN DRAWINGS AND LIMITED FIELD SURVEY AND ARE NOT GUARANTEED. THE CONTRACTORS SHALL TAKE ALL FIELD MEASUREMENTS NECESSARY TO ASSURE PROPER FIT OF THE FINISHED WORK AND SHALL ASSUME FULL RESPONSIBILITY FOR THEIR ACCURACY. ALL FIELD MEASUREMENTS TAKEN SHALL BE SUPPLIED TO THE ENGINEER FOR REVIEW.

REMAIN-IN-PLACE FORMS: USE OF REMAIN-IN-PLACE FORMS ON THIS STRUCTURE IS NOT ALLOWED.

TRAFFIC LOADS: CONSTRUCTION LOADS AND DEAD LOADS WILL BE PERMITTED WHEN DIRECTED BY THE ENGINEER, BUT ONLY WHEN THE CONCRETE HAS REACHED A STRENGTH OF f'c= 3300 PSI. LIVE LOADS (TRAFFIC) WILL BE PERMITTED ON THE STRUCTURE AFTER THE CONCRETE HAS REACHED A STRENGTH OF f'c= 4400 PSI.

CLASS "A" CONCRETE: CLASS "A" CONCRETE SHALL BE USED FOR ALL PRECAST SUBSTRUCTURE ELEMENTS INCLUDING ABUTMENTS AND BARRIER WALL.

CLASS "F" CONCRETE: CLASS "F" CONCRETE SHALL BE USED FOR THE PRECAST BRIDGE DECK ALONG WITH PARAPETS AND APPROACH SLABS.

HIGH EARLY STRENGTH CONCRETE: HIGH EARLY STRENGTH CONCRETE SHALL BE USED FOR CAST-IN-PLACE ABUTMENT CAP AND LONGITUDINAL CLOSURE JOINTS BETWEEN PRECAST SUPERSTRUCTURE UNITS.

HIGH EARLY STRENGTH NON-SHRINK GROUT: HIGH EARLY STRENGTH NON-SHRINK GROUT SHALL BE USED FOR FILLING OF ALL THREADED SLEEVES AT PRECAST ABUTMENT PILES AND PRECAST TO PRECAST CONNECTIONS.

JOINT SEAL: SEE SPECIAL PROVISIONS.

EXPOSED EDGES: EXPOSED EDGES OF CONCRETE SHALL BE BEVELED 1" x 1" UNLESS DIMENSIONED OTHERWISE.

CONCRETE COVER: ALL REINFORCEMENT SHALL HAVE 2" COVER UNLESS DIMENSIONED OTHERWISE.

REINFORCEMENT: ALL REINFORCEMENT SHALL BE ASTM A615 GRADE 60.

EPOXY COATED REINFORCING BARS: ALL REINFORCEMENT IN THE SUPERSTRUCTURE INCLUDING THE CONCRETE DECK SLAB, CAST-IN-PLACE ABUTMENT CAP AND THE PARAPETS SHALL BE EPOXY COATED. ALL REINFORCEMENT IN THE TOP MAT OF THE CONCRETE APPROACH SLABS SHALL BE EPOXY COATED. THESE BARS SHALL BE INCLUDED IN THE INDIVIDUAL PRECAST ITEMS. EPOXY COATED REINFORCEMENT WITHIN PARAPETS SHALL BE PAID FOR UNDER, "DEFORMED STEEL BARS - EPOXY COATED".

PREFORMED EXPANSION JOINT FILLER: THE COST OF FURNISHING AND INSTALLING PREFORMED EXPANSION JOINT FILLER SHALL BE INCLUDED IN THE COST OF "CLASS 'A' CONCRETE".

CONSTRUCTION JOINTS: CONSTRUCTION JOINTS, OTHER THAN THOSE SHOWN ON THE PLANS, WILL NOT BE PERMITTED WITHOUT THE PRIOR APPROVAL OF THE ENGINEER.

STATIONING: STATIONS ARE GIVEN IN FEET.

REV.	DATE	REVISION DESCRIPTION	SHEET NO.

THE INFORMATION, INCLUDING ESTIMATED QUANTITIES OF WORK, SHOWN ON THESE SHEETS IS BASED ON LIMITED INVESTIGATIONS BY THE STATE AND IS IN NO WAY WARRANTED TO INDICATE THE CONDITIONS OF ACTUAL QUANTITIES OF WORK WHICH WILL BE REQUIRED.

Plotted Date: 12/10/2014

DESIGNER/DRAFTER: G.T.G/J.C.G
CHECKED BY: O.S.J
SCALE AS NOTED

STATE OF CONNECTICUT
DEPARTMENT OF TRANSPORTATION

Filename: ...\SB_MSH_117_157_GNN.dgn

SIGNATURE/BLOCK:

PARSONS BRINCKERHOFF
500 WINDING BROOK DR.
GLASTONBURY, CT 06033

PROJECT TITLE:
REPLACEMENT OF ROUTE 7 OVER NORWALK RIVER (BRIDGE NO. 02029)

TOWN: RIDGEFIELD

DRAWING TITLE: GENERAL NOTES

PROJECT NO. 117-157
DRAWING NO. S-02
SHEET NO. 05.03

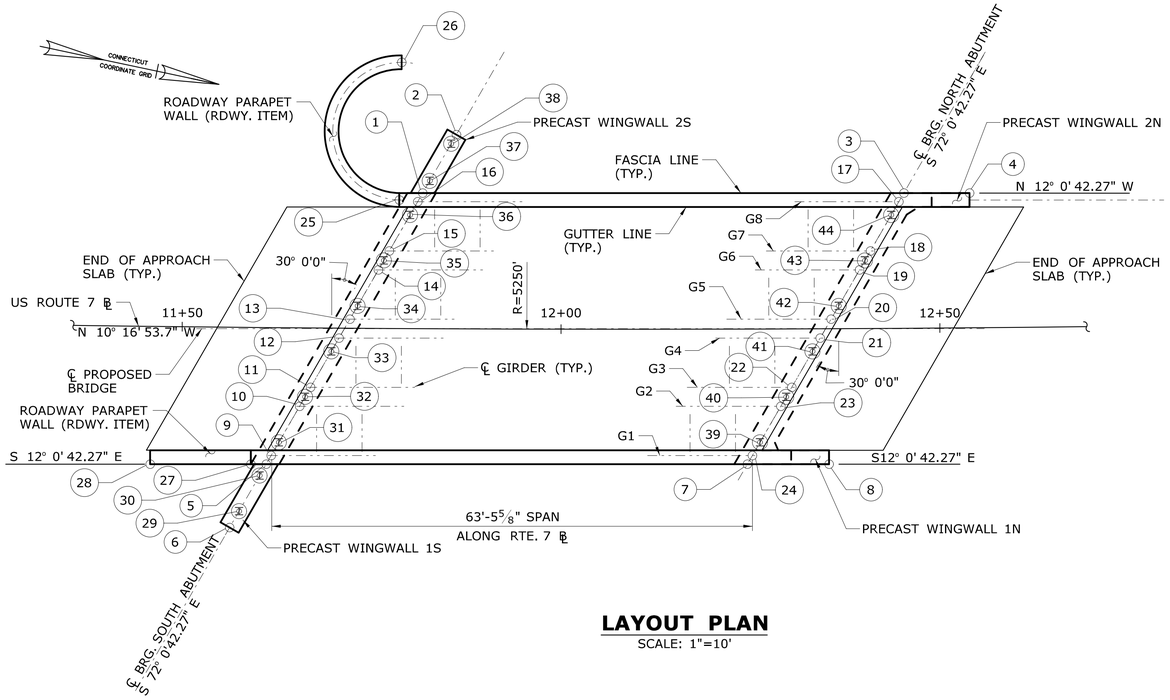

LAYOUT PLAN

SCALE: 1"=10'

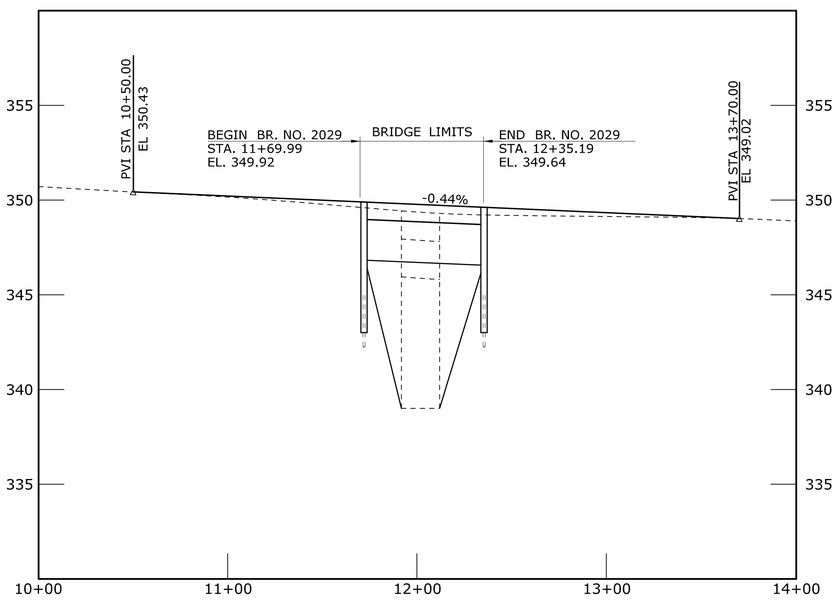

US ROUTE 7 PROFILE

HORIZ SCALE: 1"=40'
VERT SCALE: 1"=4'

WORKING POINT COORDINATES

WORKING POINT	NORTHING	EASTING	LOCATIONS
WP 1	N 159550.130	E 409618.875	WW 2S INTERSECTION WITH ℄ SOUTH ABUTMENT
WP 2	N 159552.877	E 409610.415	WW 2S ℄ AT WEST END
WP 3	N 159612.248	E 409605.659	NORTH ABUTMENT ℄ INTERSECTION WITH WW 2N
WP 4	N 159620.732	E 409603.853	WW 2N NORTHWEST CORNER
WP 5	N 159537.371	E 409658.172	WW 1S - INTERSECTION WITH ℄ SOUTH ABUTMENT
WP 6	N 159534.389	E 409667.353	WW 1S CENTERLINE AT EAST END
WP 7	N 159599.489	E 409644.955	NORTH ABUTMENT ℄ INTERSECTION WITH WW 1N
WP 8	N 159610.043	E 409642.709	WW 1N NORTHEAST CORNER
WP 9	N 159537.777	E 409656.920	GIRDER G1- SOUTH ABUTMENT
WP 10	N 159540.095	E 409649.781	GIRDER G2 - SOUTH ABUTMENT
WP 11	N 159540.987	E 409647.035	GIRDER G3 - SOUTH ABUTMENT
WP 12	N 159543.304	E 409639.987	GIRDER G4 - SOUTH ABUTMENT
WP 13	N 159544.196	E 409637.151	GIRDER G5 - SOUTH ABUTMENT
WP 14	N 159546.514	E 409630.012	GIRDER G6 - SOUTH ABUTMENT
WP 15	N 159547.405	E 409627.267	GIRDER G7 - SOUTH ABUTMENT
WP 16	N 159549.723	E 409620.128	GIRDER G8 - SOUTH ABUTMENT
WP 17	N 159611.841	E 409606.911	GIRDER G8 - NORTH ABUTMENT
WP 18	N 159609.532	E 409614.050	GIRDER G7 - NORTH ABUTMENT
WP 19	N 159608.632	E 409616.795	GIRDER G6 - NORTH ABUTMENT
WP 20	N 159606.314	E 409623.934	GIRDER G5 - NORTH ABUTMENT
WP 21	N 159605.422	E 409626.680	GIRDER G4 - NORTH ABUTMENT
WP 22	N 159603.105	E 409633.818	GIRDER G3 - NORTH ABUTMENT
WP 23	N 159602.213	E 409636.564	GIRDER G2 - NORTH ABUTMENT
WP 24	N 159599.895	E 409643.703	GIRDER G1 - NORTH ABUTMENT
WP 25	N 159547.309	E 409620.413	ROADWAY PARAPET WALL BEGIN @ ℄
WP 26	N 159543.829	E 409602.578	ROADWAY PARAPET WALL END @ ℄
WP 27	N 159535.394	E 409658.593	ROADWAY PARAPET WALL BEGIN @ FASCIA
WP 28	N 159522.394	E 409661.359	ROADWAY PARAPET WALL END @ FASCIA
WP 29	N 159535.161	E 409664.976	WINGWALL 1S PILE
WP 30	N 159536.836	E 409659.819	WINGWALL 1S PILE
WP 31	N 159538.401	E 409654.998	SOUTH ABUTMENT PILE
WP 32	N 159540.541	E 409648.408	SOUTH ABUTMENT PILE
WP 33	N 159542.680	E 409641.819	SOUTH ABUTMENT PILE
WP 34	N 159544.820	E 409635.229	SOUTH ABUTMENT PILE
WP 35	N 159546.960	E 409628.639	SOUTH ABUTMENT PILE
WP 36	N 159549.099	E 409622.050	SOUTH ABUTMENT PILE
WP 37	N 159550.704	E 409617.107	WINGWALL 2S PILE
WP 38	N 159552.451	E 409611.726	WINGWALL 2S PILE
WP 39	N 159600.519	E 409641.781	NORTH ABUTMENT PILE
WP 40	N 159602.659	E 409635.191	NORTH ABUTMENT PILE
WP 41	N 159604.798	E 409628.602	NORTH ABUTMENT PILE
WP 42	N 159606.938	E 409622.012	NORTH ABUTMENT PILE
WP 43	N 159609.078	E 409615.423	NORTH ABUTMENT PILE
WP 44	N 159611.217	E 409608.833	NORTH ABUTMENT PILE

REV.	DATE	REVISION DESCRIPTION	SHEET NO.

THE INFORMATION, INCLUDING ESTIMATED QUANTITIES OF WORK, SHOWN ON THESE SHEETS IS BASED ON LIMITED INVESTIGATIONS BY THE STATE AND IS IN NO WAY WARRANTED TO INDICATE THE CONDITIONS OF ACTUAL QUANTITIES OF WORK WHICH WILL BE REQUIRED.

Plotted Date: 12/10/2014

DESIGNER/DRAFTER: G.T.G/P.M.M.
CHECKED BY: O.S.J
SCALE AS NOTED

STATE OF CONNECTICUT
DEPARTMENT OF TRANSPORTATION

Filename: ...\SB_MSH_117_157_PRO.dgn

SIGNATURE/BLOCK:
PARSONS BRINCKERHOFF
500 WINDING BROOK DR.
GLASTONBURY, CT 06033

PROJECT TITLE:
REPLACEMENT OF ROUTE 7 OVER NORWALK RIVER (BRIDGE NO. 02029)

TOWN: RIDGEFIELD

DRAWING TITLE: BRIDGE LAYOUT PLAN AND PROFILE

PROJECT NO. 117-157
DRAWING NO. S-03
SHEET NO. 05.04

Connecticut DOT Boring Report

Driller	M. DeAngelis	Hole No.:	PB-1
Inspector:	D. D'Angelo	Town: Ridgefield	Stat./Offset:
Engineer:	Parsons Brinckerhoff	Project No.: State Project No. 117-157	Northing: 159545
Start Date:	10-12-12	Route No.: 7	Easting: 409620
Finish Date:	10-12-12	Bridge No.: 02029	Surface Elevation: 349.5
Project Description:	US Route 7 over Norwalk River, Ridgefield, CT		
Casing Size/Type:	4" ID Auger	Sampler Type/Size: Split Spoon / 1-3/8" I.D.	Core Barrel Type: NX - Double Tube
Hammer Wt.: 300lb	Fall: 24in.	Hammer Wt.: 140lb Fall: 30in.	
Groundwater Observations:	@7.5 ft		

Depth (ft)	Sample Type/No.	Blows on Sampler per 6 inches	Pen. (in.)	Rec. (in.)	RQD %	Generalized Strata Description	Material Description and Notes	Elevation (ft)
0						PAVEMENT	0' to 0.5': ASPHALT	
	S-1	15 10 9 9	24	8		MISC. FILL	Dark brown, fine to coarse SAND and fine to coarse GRAVEL, little silt, medium dense	
5	S-2	12 6 4 4	24	4			Brown, fine to coarse SAND, some fine to medium gravel, some silt, loose to medium dense	345
						ORGANIC SILT		
10	S-3	2 2 2 3	24	24			Dark brown, ORGANIC SILT, trace clay, slight plasticity, little brown to gray fine sand, trace fibrous peat, soft to medium stiff	340
						GRAVELLY SAND		
15	S-4	5 30 26 32	24	12			Light brown, fine to coarse SAND and fine to medium GRAVEL, trace silt, very dense	335
20	S-5	4 4 4 4	24	14			Light Brown, coarse to fine SAND, little fine to medium gravel, loose	330
25	S-6	8 8 13 13	24	6			Light brown, coarse to fine SAND, some fine to coarse gravel, medium dense	325
						SAND		
30								320

Sample Type: S = Split Spoon C = Core UP = Undisturbed Piston V = Vane Shear Test

Proportions Used: Trace = 1 - 10%, Little = 10 - 20%, Some = 20 - 35%, And = 35 - 50%

Total Penetration in Earth: 50ft Rock: 11ft	NOTES: 1. SPTs taken with safety hammer, winch and NW rods 2. Drilling by Soil Testing Inc. with Diedrich D120 truck mounted drill rig	Sheet 1 of 3
No. of Soil Samples: 11 No. of Core Runs: 2		SM-001-M REV. 1/02

Connecticut DOT Boring Report

Driller	M. DeAngelis	Hole No.:	PB-1
Inspector:	D. D'Angelo	Town: Ridgefield	Stat./Offset:
Engineer:	Parsons Brinckerhoff	Project No.: State Project No. 117-157	Northing: 159545
Start Date:	10-12-12	Route No.: 7	Easting: 409620
Finish Date:	10-12-12	Bridge No.: 02029	Surface Elevation: 349.5
Project Description:	US Route 7 over Norwalk River, Ridgefield, CT		
Casing Size/Type:	4" ID Auger	Sampler Type/Size: Split Spoon / 1-3/8" I.D.	Core Barrel Type: NX - Double Tube
Hammer Wt.: 300lb	Fall: 24in.	Hammer Wt.: 140lb Fall: 30in.	
Groundwater Observations:	@7.5 ft		

Depth (ft)	Sample Type/No.	Blows on Sampler per 6 inches	Pen. (in.)	Rec. (in.)	RQD %	Generalized Strata Description	Material Description and Notes	Elevation (ft)
30	S-7	14 14 18 22	24	9		SAND *(con't)*	Light brown, fine SAND, trace coarse sand, dense	
35	S-8	6 9 9 9	24	12			Light brown, fine SAND, trace coarse sand, trace silt, medium dense	315
40	S-9	100/2"	2	0			Note: Boulder 40.2' to 42.5'	310
45	S-10	8 15 13 35	24	13			Light brown, fine SAND, trace coarse sand, trace fine to medium gravel, trace silt, medium dense	305
50	S-11	100/3"	3	0		BEDROCK	No recovery: Wash sample obtained of fine to coarse gravel and coarse sand	300
55	C-1		60	29	27		Gray, GNEISS, medium grained, highly to intensely fractured, fresh to slightly weathered, strong to very strong; C1: 4,3,3,4,4 min/ft	295
60	C-2		60	60	22		Gray,GNEISS, medium grained, highly to intensely fractured, fresh to slightly weathered, strong to very strong; C2: 9,6,6,5,5 min/ft	290

Sample Type: S = Split Spoon C = Core UP = Undisturbed Piston V = Vane Shear Test

Proportions Used: Trace = 1 - 10%, Little = 10 - 20%, Some = 20 - 35%, And = 35 - 50%

Total Penetration in Earth: 50ft Rock: 11ft	NOTES: 1. SPTs taken with safety hammer, winch and NW rods 2. Drilling by Soil Testing Inc. with Diedrich D120 truck mounted drill rig	Sheet 2 of 3
No. of Soil Samples: 11 No. of Core Runs: 2		SM-001-M REV. 1/02

Connecticut DOT Boring Report

Driller	M. DeAngelis	Hole No.:	PB-1
Inspector:	D. D'Angelo	Town: Ridgefield	Stat./Offset:
Engineer:	Parsons Brinckerhoff	Project No.: State Project No. 117-157	Northing: 159545
Start Date:	10-12-12	Route No.: 7	Easting: 409620
Finish Date:	10-12-12	Bridge No.: 02029	Surface Elevation: 349.5
Project Description:	US Route 7 over Norwalk River, Ridgefield, CT		
Casing Size/Type:	4" ID Auger	Sampler Type/Size: Split Spoon / 1-3/8" I.D.	Core Barrel Type: NX - Double Tube
Hammer Wt.: 300lb	Fall: 24in.	Hammer Wt.: 140lb Fall: 30in.	
Groundwater Observations:	@7.5 ft		

Depth (ft)	Sample Type/No.	Blows on Sampler per 6 inches	Pen. (in.)	Rec. (in.)	RQD %	Generalized Strata Description	Material Description and Notes	Elevation (ft)
60						BEDROCK *(con't)*		
							END OF BORING 61ft	
65								285
70								280
75								275
80								270
85								265
90								260

Sample Type: S = Split Spoon C = Core UP = Undisturbed Piston V = Vane Shear Test

Proportions Used: Trace = 1 - 10%, Little = 10 - 20%, Some = 20 - 35%, And = 35 - 50%

Total Penetration in Earth: 50ft Rock: 11ft	NOTES: 1. SPTs taken with safety hammer, winch and NW rods 2. Drilling by Soil Testing Inc. with Diedrich D120 truck mounted drill rig	Sheet 3 of 3
No. of Soil Samples: 11 No. of Core Runs: 2		SM-001-M REV. 1/02

REV.	DATE	REVISION DESCRIPTION	SHEET NO.

THE INFORMATION, INCLUDING ESTIMATED QUANTITIES OF WORK, SHOWN ON THESE SHEETS IS BASED ON LIMITED INVESTIGATIONS BY THE STATE AND IS IN NO WAY WARRANTED TO INDICATE THE CONDITIONS OF ACTUAL QUANTITIES OF WORK WHICH WILL BE REQUIRED.

Plotted Date: 12/10/2014

DESIGNER/DRAFTER: R.W.B/G.T.G

CHECKED BY: O.S.J

STATE OF CONNECTICUT
DEPARTMENT OF TRANSPORTATION

Filename: ...\SB_MSH_117_157_BOR-1.dgn

SIGNATURE/BLOCK:

PARSONS BRINCKERHOFF
500 WINDING BROOK DR.
GLASTONBURY, CT 06033

PROJECT TITLE:

REPLACEMENT OF ROUTE 7 OVER NORWALK RIVER (BRIDGE NO. 02029)

TOWN: **RIDGEFIELD**

DRAWING TITLE: **BORING LOGS - PB-1**

PROJECT NO. **117-157**

DRAWING NO. **S-04**

SHEET NO. **05.05**

Driller	M. DeAngelis	**Connecticut DOT Boring Report**	Hole No.: PB-2
Inspector:	D. D'Angelo	Town: Ridgefield	Stat./Offset:
Engineer:	Parsons Brinckerhoff	Project No.: State Project No. 117-157	Northing: 159627
Start Date:	10-15-12	Route No.: 7	Easting: 409613
Finish Date:	10-15-12	Bridge No.: 02029	Surface Elevation: 350.0
Project Description:	US Route 7 over Norwalk River, Ridgefield, CT		
Casing Size/Type:	4" ID Auger	Sampler Type/Size: Split Spoon / 1-3/8" I.D.	Core Barrel Type: NX - Double Tube
Hammer Wt.: 300lb	Fall: 24in.	Hammer Wt.: 140lb Fall: 30in.	
Groundwater Observations:	@8.0 ft		

Depth (ft)	Sample Type/No.	Blows on Sampler per 6 inches	Pen. (in.)	Rec. (in.)	RQD %	Generalized Strata Description	Material Description and Notes	Elevation (ft)
0						PAVEMENT	0' to 1'3": ASPHALT (8") over CONCRETE (7")	350
	S-1	21 23 18 14	24	15		MISC. FILL	Brown, fine to coarse SAND and fine to coarse GRAVEL, trace silt, dense	
5	S-2	29 27 17 13	24	8			Brown, fine to coarse SAND and fine to coarse GRAVEL, trace silt, dense	345
10	S-3	2 2 2 10	24	20		ORGANIC SILT SILTY SAND	S-3A (above 11.5'): Dark brown, ORGANIC SILT, slight plasticity, some fibrous peat, trace fine sand, soft to medium stiff S-3B (below 11.5"): Gray, fine SAND, little silt, trace coarse sand	340
15	S-4	10 7 5 13	24	12		SAND	Brown, fine to coarse SAND, trace fine gravel, medium dense	335
20	S-5	7 8 16 14	24	16			Brown, fine to coarse SAND, trace fine gravel, medium dense	330
25	S-6	5 5 4 5	24	19			Brown, fine SAND, trace coarse sand, loose	325
30								320

Sample Type: S = Split Spoon C = Core UP = Undisturbed Piston V = Vane Shear Test

Proportions Used: Trace = 1 - 10%, Little = 10 - 20%, Some = 20 - 35%, And = 35 - 50%

Total Penetration in	NOTES: 1. SPTs taken with safety hammer, winch and NW rods	Sheet
Earth: 48ft Rock: 5.5ft	2. Drilling by Soil Testing Inc. with Diedrich D120 truck mounted drill rig	1 of 2
No. of Soil Samples: 10 No. of Core Runs: 1		SM-001-M REV. 1/02

Driller	M. DeAngelis	**Connecticut DOT Boring Report**	Hole No.: PB-2
Inspector:	D. D'Angelo	Town: Ridgefield	Stat./Offset:
Engineer:	Parsons Brinckerhoff	Project No.: State Project No. 117-157	Northing: 159627
Start Date:	10-15-12	Route No.: 7	Easting: 409613
Finish Date:	10-15-12	Bridge No.: 02029	Surface Elevation: 350.0
Project Description:	US Route 7 over Norwalk River, Ridgefield, CT		
Casing Size/Type:	4" ID Auger	Sampler Type/Size: Split Spoon / 1-3/8" I.D.	Core Barrel Type: NX - Double Tube
Hammer Wt.: 300lb	Fall: 24in.	Hammer Wt.: 140lb Fall: 30in.	
Groundwater Observations:	@8.0 ft		

Depth (ft)	Sample Type/No.	Blows on Sampler per 6 inches	Pen. (in.)	Rec. (in.)	RQD %	Generalized Strata Description	Material Description and Notes	Elevation (ft)
30	S-7	10 10 8 13	24	18		SAND *(con't)*	Brown, fine SAND, trace coarse sand, trace fine to medium gravel, medium dense	320
35	S-8	4 7 10 13	24	22			Brown, fine SAND, trace coarse sand, medium dense	315
40	S-9	14 11 7 7	24	5			Brown, fine SAND, trace silt, medium dense	310
45	S-10	7 7 10 13	24	7		SANDY GRAVEL	Light Brown, fine to medium GRAVEL and fine to coarse SAND, trace silt, medium dense	305
50	C-1		60	60	70	BEDROCK	Gray, GNEISS, medium grained, highly to intensely fractured, fresh, strong to very strong; C1: 3, 3, 2.5, 2.5, 2.5 min/ft	300
55							END OF BORING 53.5ft	295
60								290

Sample Type: S = Split Spoon C = Core UP = Undisturbed Piston V = Vane Shear Test

Proportions Used: Trace = 1 - 10%, Little = 10 - 20%, Some = 20 - 35%, And = 35 - 50%

Total Penetration in	NOTES: 1. SPTs taken with safety hammer, winch and NW rods	Sheet
Earth: 48ft Rock: 5.5ft	2. Drilling by Soil Testing Inc. with Diedrich D120 truck mounted drill rig	2 of 2
No. of Soil Samples: 10 No. of Core Runs: 1		SM-001-M REV. 1/02

REV.	DATE	REVISION DESCRIPTION	SHEET NO.

THE INFORMATION, INCLUDING ESTIMATED QUANTITIES OF WORK, SHOWN ON THESE SHEETS IS BASED ON LIMITED INVESTIGATIONS BY THE STATE AND IS IN NO WAY WARRANTED TO INDICATE THE CONDITIONS OF ACTUAL QUANTITIES OF WORK WHICH WILL BE REQUIRED.

Plotted Date: 12/10/2014

DESIGNER/DRAFTER: R.W.B/G.T.G

CHECKED BY: O.S.J

STATE OF CONNECTICUT
DEPARTMENT OF TRANSPORTATION

Filename: ...\SB_MSH_117_157_BOR-2.dgn

SIGNATURE/BLOCK:

PARSONS BRINCKERHOFF
500 WINDING BROOK DR.
GLASTONBURY, CT 06033

PROJECT TITLE:

REPLACEMENT OF ROUTE 7 OVER NORWALK RIVER (BRIDGE NO. 02029)

TOWN: **RIDGEFIELD**

DRAWING TITLE: **BORING LOGS - PB-2**

PROJECT NO. **117-157**

DRAWING NO. **S-05**

SHEET NO. **05.06**

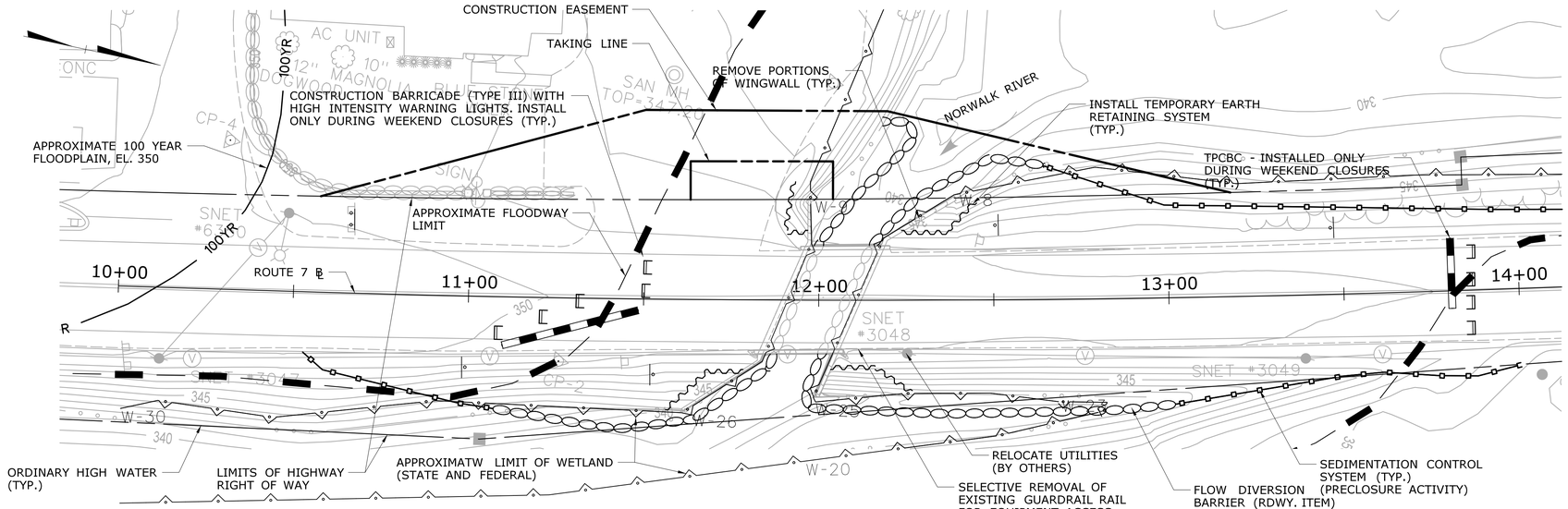

PLAN WEEKEND NO. 1

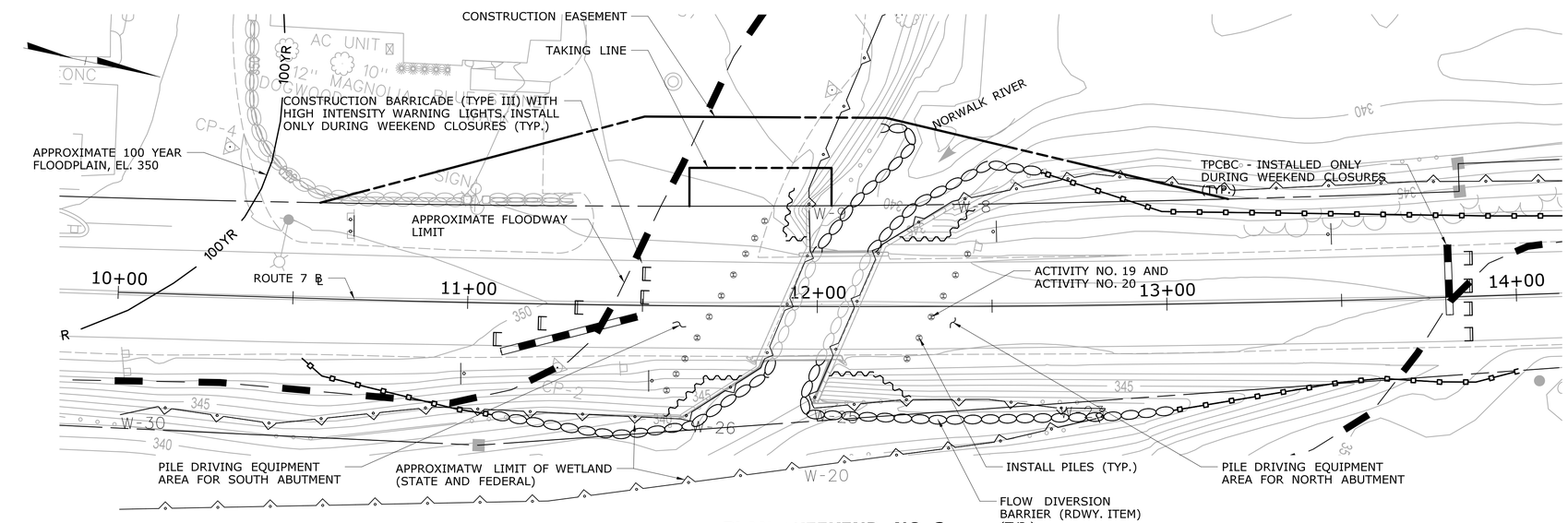

PLAN WEEKEND NO. 2

SUGGESTED CONSTRUCTION SEQUENCE

PRECLOSURE ACTIVITIES (TO BE PERFORMED OFFLINE WITH LANE CLOSURES AT NIGHT/OFF-PEAK HOURS)

ACTIVITY NO.

1 OVERHEAD UTILITY RELOCATION. (BY OTHERS).
2 MOBILIZE AND CONSTRUCT FIELD OFFICE.
3 INSTALL WATER HANDLING/DEWATERING MEASURES DURING ALLOWABLE TIME AS SHOWN.
4 INSTALL WETLAND, SEDIMENTATION, AND CONSTRUCTION PROTECTION AS SHOWN.
5 CLEARING AND GRUBBING.

DETOUR WEEKEND 1

ACTIVITY NO.

6 CLOSE BRIDGE AND DETOUR TRAFFIC.
7 SELECTIVE REMOVAL OF EXISTING GUARDRAIL RAIL FOR EQUIPMENT ACCESS.
8 INSTALL TEMPORARY EARTH RETAINING SYSTEM AS SHOWN.
9 REMOVE PORTIONS OF WINGWALLS.
10 RE-INSTALL GUARDRAIL RAIL AS REQUIRED BETWEEN EXISTING BRIDGE BARRIER AND EXISTING GUARDRAIL.
11 RE-OPEN TO TRAFFIC.

OFFLINE CONSTRUCTION

ACTIVITY NO.

12 CONTINUE OFF-LINE DEMOLITION WORK AT WINGWALLS.
13 CONTINUE CONSTRUCTION AT ACCESSIBLE AREAS INCLUDING EXCAVATION, REMOVAL, GRADING.

DETOUR WEEKEND 2

ACTIVITY NO.

14 CLOSE BRIDGE AND DETOUR TRAFFIC.
15 SELECTIVE REMOVAL OF EXISTING GUARDRAIL RAIL FOR EQUIPMENT ACCESS.
16 MOBILIZE CRANE TO BRIDGE AREA.
17 EXCAVATE AT PROPOSED ABUTMENT LOCATIONS FOR PILE DRIVING AS SHOWN.
18 MOBILIZE PILES FOR DRIVING.
19 DRIVE TEST PILE.
20 DRIVE PRODUCTION PILES AT ABUTMENTS AND WINGWALLS.
21 BACKFILL AND INSTALL TEMPORARY PAVEMENT, REINSTALL GUARDRAIL RAIL.
22 RE-OPEN TO TRAFFIC.

OFFLINE CONSTRUCTION

ACTIVITY NO.

23 CONTINUE CONSTRUCTION AT ACCESSIBLE AREAS INCLUDING EXCAVATION, REMOVAL, GRADING.

NOTES:

1. FOR STAGING DETAILS, SEE DWG. S-09.
2. THE "SUGGESTED CONSTRUCTION SEQUENCE" IS SHOWN TO OUTLINE SEQUENCE OF MAJOR WORK ONLY. THE CONTRACTOR SHALL PLAN AND PERFORM OTHER ACTIVITIES ACCORDINGLY.
3. THE CONTRACTOR TO PERFORM SIMULTANEOUS ACTIVITIES WHEREVER POSSIBLE.
4. SEDIMENTATION CONTROL SYSTEMS SHALL BE CARRIED OUT TO STA. 15+50 FOR GUARDRAIL INSTALLATION.
5. TIME OF YEAR RESTRICTION IS DEFINED AS THE TIME BETWEEN JUNE 1ST TO SEPT. 30TH WHERE UNCONFINED WORK WITHIN RIVER WILL BE ALLOWED TO PLACE WATER HANDLING DEVICES.
6. REMOVAL OF EXISTING GUARDRAIL SHALL BE PAID UNDER ITEM "REMOVE METAL BEAM RAIL". RESETTING OF GUARDRAIL SHALL BE PAID UNDER ITEM "RESET METAL BEAM RAIL".

REV.	DATE	REVISION DESCRIPTION	SHEET NO.

THE INFORMATION, INCLUDING ESTIMATED QUANTITIES OF WORK, SHOWN ON THESE SHEETS IS BASED ON LIMITED INVESTIGATIONS BY THE STATE AND IS IN NO WAY WARRANTED TO INDICATE THE CONDITIONS OF ACTUAL QUANTITIES OF WORK WHICH WILL BE REQUIRED.

Plotted Date: 12/8/2014

DESIGNER/DRAFTER: SFC
CHECKED BY: NSV
SCALE IN FEET 0 20 40
SCALE 1"=20'

STATE OF CONNECTICUT
DEPARTMENT OF TRANSPORTATION

Filename: ...\SB_MSH_Br02029_117_157_S-06_STG-1-2.dgn

SIGNATURE/BLOCK:
VB TECHNOLOGIES CORPORATION
STRUCTURAL & CIVIL ENGINEERS
2049 SILAS DEANE HIGHWAY, SUITE# 1E
ROCKY HILL, CT 06067

PROJECT TITLE:
REPLACEMENT OF ROUTE 7 OVER NORWALK RIVER (BRIDGE NO. 02029)

TOWN: **RIDGEFIELD**

DRAWING TITLE: **CONSTRUCTION SEQUENCE - 1**

PROJECT NO. 117-157
DRAWING NO. S-06
SHEET NO. 05.07

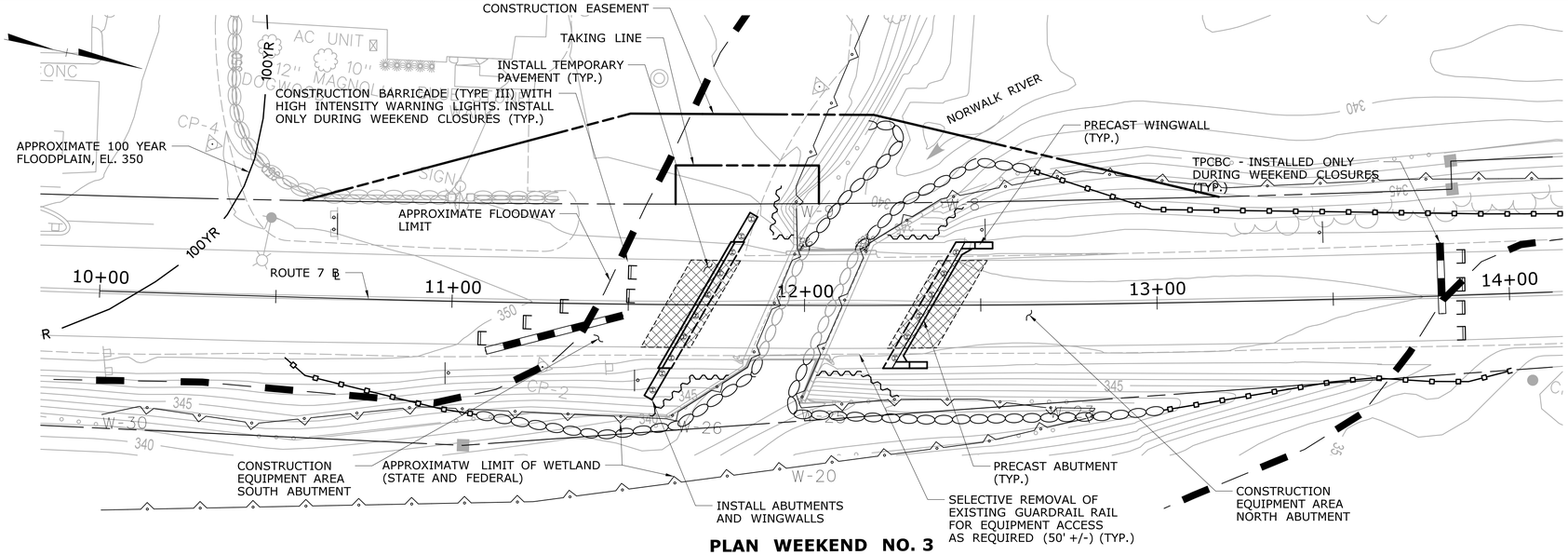

PLAN WEEKEND NO. 3

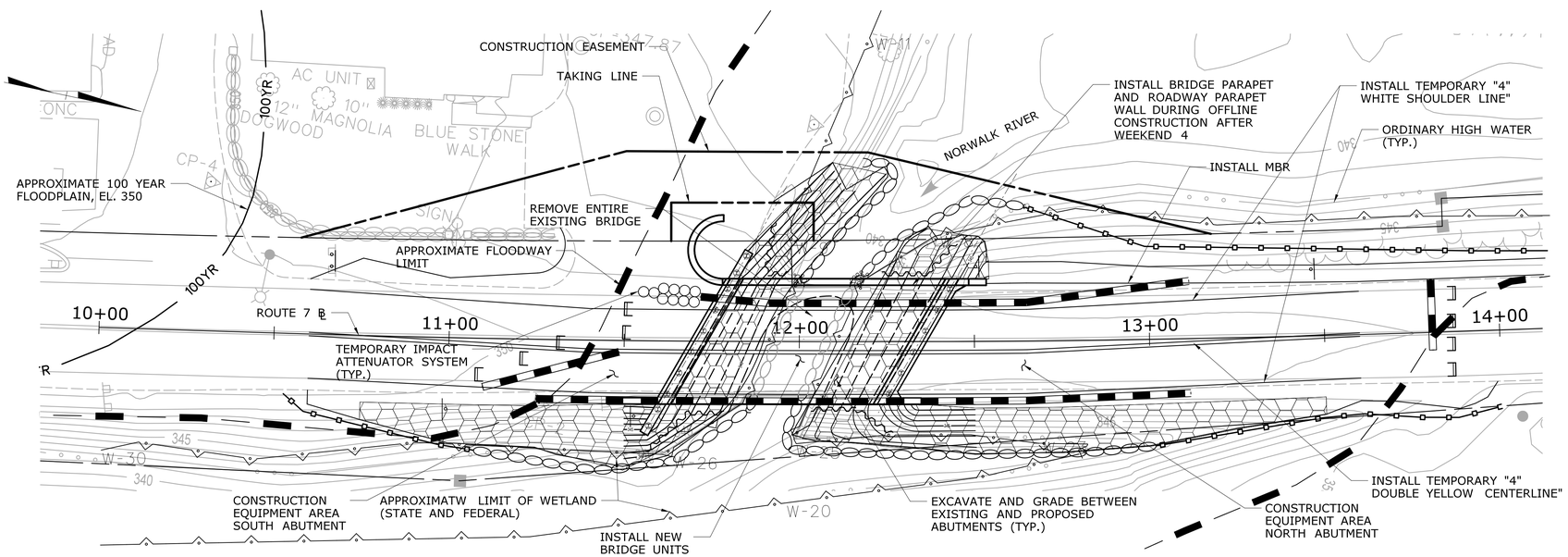

PLAN WEEKEND NO. 4

SUGGESTED CONSTRUCTION SEQUENCE

DETOUR WEEKEND 3

ACTIVITY NO.

24 CLOSE BRIDGE AND DETOUR TRAFFIC.
25 SELECTIVE REMOVAL OF EXISTING GUARDRAIL RAIL FOR EQUIPMENT ACCESS.
26 MOBILIZE CRANE TO EXISTING BRIDGE AREA.
27 EXCAVATE FOR INSTALLING BOTH THE ABUTMENT & WINGWALLS.
28 INSTALL PRECAST ABUTMENTS & WINGWALLS.
29 GROUT PILE POCKETS & SUBSTRUCTURE JOINTS.
30 ALLOW FOR MAXIMUM CURE TIME.
31 PERFORM WIDENING AT APPROACHES AS SHOWN ON EAST SIDE OF THE ROADWAY.
32 BACKFILL & INSTALL TEMPORARY PAVEMENT, REINSTALL GUARDRAIL RAIL.
33 RE-OPEN TO TRAFFIC.

OFFLINE CONSTRUCTION

ACTIVITY NO.

34 CONTINUE CONSTRUCTION AT ACCESSIBLE AREAS INCLUDING EXCAVATION, REMOVAL, GRADING, CLEARING AND GRUBBING.

DETOUR WEEKEND 4

ACTIVITY NO.

35 CLOSE BRIDGE AND DETOUR TRAFFIC.
36 SAWCUT & REMOVE 2' DECK SLAB, BARRIERS.
37 REMOVE GUARDRAIL.
38 EXCAVATE BETWEEN EXISTING/PROPOSED ABUTMENTS.
39 SAWCUT/DEMO & REMOVE EXISTING ABUTMENTS.
40 ROUGH GRADE TO PROPOSED GRADE.
41 INSTALL RIPRAP ON THE PROPOSED GRADE.
42 MOBILIZE CRANE & TRAILERS WITH BRIDGE UNITS.
43 ERECT BRIDGE UNIT NUMBER 1.
44 SECURE TO ABUTMENTS WITH LEVELING ANCHOR BOLTS.
45 REPEAT STEPS 41-42 FOR UNIT NUMBER 2.
46 SECURE DIAPHRAGMS BETWEEN UNIT 1 & 2.
47 REPEAT STEPS 43-44 FOR UNIT NUMBER 3.
48 SECURE DIAPHRAGMS BETWEEN UNIT 2 AND 3.
49 REPEAT STEPS 43-44 FOR UNIT NUMBER 4.
50 SECURE DIAPHRAGMS BETWEEN UNIT 3 AND 4.
51 FORM AND POUR LONGITUDINAL CLOSURE POUR.
52 PLACE FORMS AND POUR INTEGRAL ABUTMENT CLOSURE.
53 CURE TO MINIMUM CONCRETE COMPRESSIVE STRENGTH PER SPECIAL PROVISION.
54 PLACE TPCBC AND RE-OPEN TO TRAFFIC.

OFFLINE CONSTRUCTION

ACTIVITY NO.

55 CONTINUE CONSTRUCTION AT ACCESSIBLE AREAS INCLUDING EXCAVATION, REMOVAL, GRADING.
56 PLACE PARAPET REINFORCEMENT AND FORMS & POUR WEST BRIDGE PARAPET, ROADWAY PARAPET WALL AT WEST SIDE.
57 PERFORM GRADING AT APPROACHES.
58 INSTALL METAL BEAM RAIL (TYPE RB-350) AND MBR ATTACHMENTS WITHIN TPCBC LIMITS.

NOTES:

1. FOR STAGING DETAILS, SEE DWG. S-09.
2. FOR DEMOLITION PLANS AND DETAILS, SEE DWGS. S-11 AND S-12.
3. THE "SUGGESTED CONSTRUCTION SEQUENCE" IS SHOWN TO OUTLINE SEQUENCE OF MAJOR WORK ONLY. THE CONTRACTOR SHALL PLAN AND PERFORM OTHER ACTIVITIES ACCORDINGLY.
4. THE CONTRACTOR TO PERFORM SIMULTANEOUS ACTIVITIES WHEREVER POSSIBLE.
5. FOR TEMPORARY BARRIER DETAILS SEE DWG. S-26.
6. FOR SUPERSTRUCTURE DETAILS SEE DWGS. S-19 AND S-20.
7. FOR LOCATIONS OF TPCBC ON THE BRIDGE SEE DWG. S-10.

REV.	DATE	REVISION DESCRIPTION	SHEET NO.

THE INFORMATION, INCLUDING ESTIMATED QUANTITIES OF WORK, SHOWN ON THESE SHEETS IS BASED ON LIMITED INVESTIGATIONS BY THE STATE AND IS IN NO WAY WARRANTED TO INDICATE THE CONDITIONS OF ACTUAL QUANTITIES OF WORK WHICH WILL BE REQUIRED.

Plotted Date: 12/9/2014

DESIGNER/DRAFTER: SFC
CHECKED BY: NSV
SCALE IN FEET 0 20 40
SCALE 1"=20'

STATE OF CONNECTICUT
DEPARTMENT OF TRANSPORTATION

Filename: ...\SB_MSH_Br02029_117_157_S-07_STG-3-4.dgn

SIGNATURE/BLOCK:
VB TECHNOLOGIES CORPORATION
STRUCTURAL & CIVIL ENGINEERS
2049 SILAS DEANE HIGHWAY, SUITE# 1E
ROCKY HILL, CT 06067

PROJECT TITLE:
REPLACEMENT OF ROUTE 7 OVER NORWALK RIVER (BRIDGE NO. 02029)

TOWN: **RIDGEFIELD**

DRAWING TITLE: **CONSTRUCTION SEQUENCE - 2**

PROJECT NO. 117-157
DRAWING NO. S-07
SHEET NO. 05.08

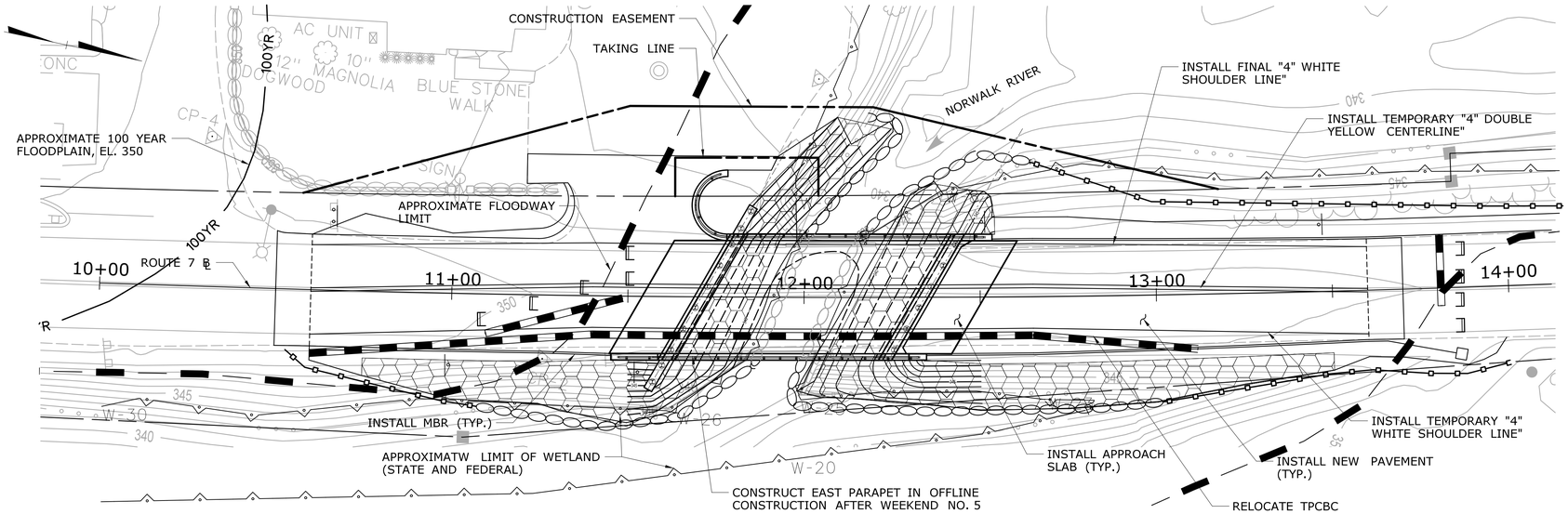

PLAN WEEKEND NO. 5

SUGGESTED CONSTRUCTION SEQUENCE

DETOUR WEEKEND 5

ACTIVITY NO.

59 CLOSE BRIDGE AND DETOUR TRAFFIC.
60 RELOCATE TPCBC.
61 CONSTRUCTION FULL DEPTH PAVEMENT.
62 EXCAVATE FOR PRECAST APPROACH SLABS.
63 INSTALL PRECAST APPROACH SLABS.
64 GROUT APPROACH SLABS & JOINTS.
65 CURE TO MINIMUM CONCRETE COMPRESSIVE STRENGTH PER SPECIAL PROVISION.
66 INSTALL REMAINING METAL BEAM RAIL (TYPE RB-350), MBR ATTACHMENTS, AND METAL BRIDGE RAIL HANDRAIL AT WEST SIDE.
67 TEMPORARY ROADWAY STRIPING.
68 RELOCATE TPCBC.
69 RE-OPEN TO TRAFFIC.

OFFLINE CONSTRUCTION

ACTIVITY NO.

70 POUR EAST BRIDGE PARAPET, ROADWAY PARAPET WALL ON EAST SIDE OF THE ROADWAY & CURE TO MINIMUM CONCRETE COMPRESSIVE STRENGTH PER SPECIAL PROVISION.
71 INSTALL MEMBRANE WATERPROOFING ON BRIDGE DECK AND APPROACH SLABS.
72 FINAL PAVING OF ROADWAY.
73 INSTALL APPROACH METAL BEAM RAIL (TYPE RB-350) AND MBR ATTACHMENTS ON EAST SIDE.
74 REMOVE TPCBC.
75 FINAL STRIPING & GRADING.
76 REMOVE WATER HANDLING & DEWATERING MEASURES.
77 REMOVE WETLAND PROTECTION AND SILT FENCES.
78 RESTORE STAGING AND LAYOUT AREAS AND AREAS DISTURBED BY THE CONSTRUCTION.
79 COMPLETE ALL INCOMPLETE CONSTRUCTION ITEMS.
80 DEMOBILIZE.

REV.	DATE	REVISION DESCRIPTION	SHEET NO.

THE INFORMATION, INCLUDING ESTIMATED QUANTITIES OF WORK, SHOWN ON THESE SHEETS IS BASED ON LIMITED INVESTIGATIONS BY THE STATE AND IS IN NO WAY WARRANTED TO INDICATE THE CONDITIONS OF ACTUAL QUANTITIES OF WORK WHICH WILL BE REQUIRED.

Plotted Date: 12/8/2014

DESIGNER/DRAFTER: SFC
CHECKED BY: NSV
SCALE IN FEET 0 20 40
SCALE 1"=20'

STATE OF CONNECTICUT
DEPARTMENT OF TRANSPORTATION

Filename: ...\SB_MSH_Br02029_117_157_S-08_STG-5.dgn

SIGNATURE/BLOCK:

VB TECHNOLOGIES CORPORATION
STRUCTURAL & CIVIL ENGINEERS
2049 BILAS DEANE HIGHWAY, SUITE# 1E
ROCKY HILL, CT 06067

PROJECT TITLE:
REPLACEMENT OF ROUTE 7 OVER NORWALK RIVER (BRIDGE NO. 02029)

TOWN: **RIDGEFIELD**

DRAWING TITLE: **CONSTRUCTION SEQUENCE - 3**

PROJECT NO. **117-157**
DRAWING NO. **S-08**
SHEET NO. **05.09**

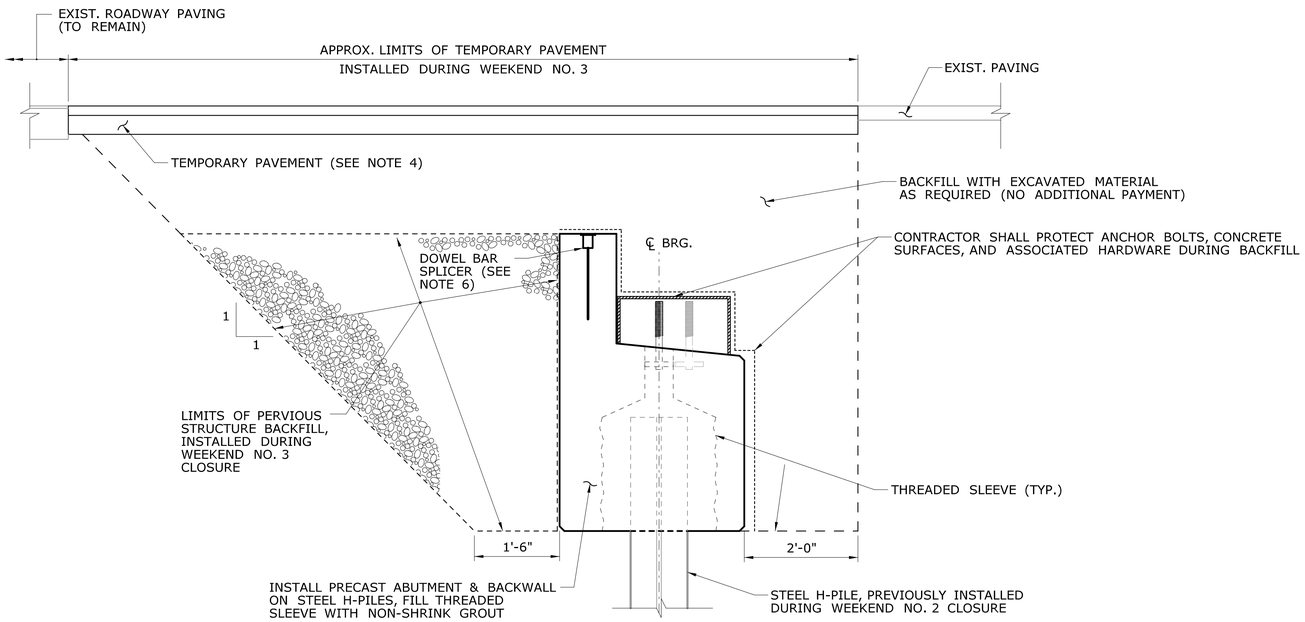

WEEKEND NO. 3: ABUTMENT INSTALLATION

SCALE: $1\frac{1}{2}$" = 1'-0"

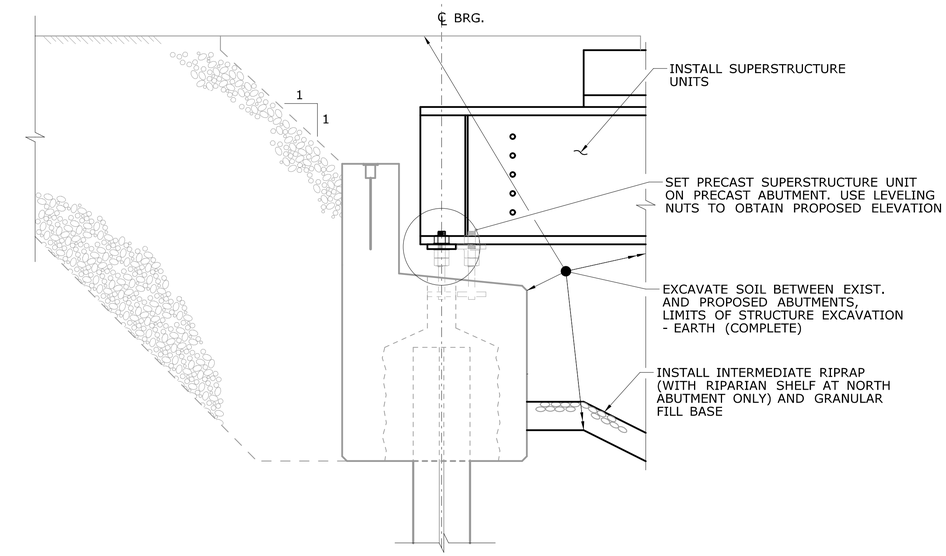

WEEKEND NO. 4: SUPERSTRUCTURE PLACEMENT

SCALE: $1\frac{1}{2}$" = 1'-0"

NOTES:

1. PERVIOUS STRUCTURE BACKFILL SHALL BE PAID UNDER ITEM, "PERVIOUS STRUCTURE BACKFILL".
2. STRUCTURE EXCAVATION SHALL BE PAID UNDER ITEM, "STRUCTURE EXCAVATION - EARTH (COMPLETE)".
3. ANCHOR BOLT AND HARDWARE PROTECTION DURING BACKFILL SHALL BE PAID UNDER, "PRECAST SUBSTRUCTURE ELEMENTS".
4. TEMPORARY PAVEMENT SHALL BE PAID UNDER "HMA S0.5" AND RDWY ITEM "SUBBASE". REMOVAL OF TEMPORARY PAVEMENT IN SUBSEQUENT WEEKEND SHALL BE PAID UNDER ITEM, "STRUCTURE EXCAVATION - EARTH (COMPLETE)".
5. FOR FURTHER INFORMATION ON INTERMEDIATE RIPRAP AND GRANULAR FILL (ROADWAY ITEMS) SEE HIGHWAY SUBSET.
6. DOWEL BAR SPLICER SHOWN SHALL BE PAID UNDER ITEM, "PRECAST SUBSTRUCTURE ELEMENTS".
7. FOR COMPLETE CONSTRUCTION SEQUENCE SEE DWGS. S-06, S-07, AND S-08.
8. FOR DETAILS OF ABUTMENT AND ABUTMENT REINFORCEMENT SEE DWGS. S-13, S-14, AND S-15.
9. IF GAP BETWEEN APPROACH SLAB AND CAST-IN-PLACE ABUTMENT IS PRESENT AFTER PLACEMENT OF APPROACH SLAB, CONTRACTOR SHALL FILL GAP WITH POURABLE SEALANT. POURABLE SEALANT SHALL BE PAID UNDER ITEM "PRECAST APPROACH SLAB".
10. SEE DWG. MDS-01 FOR INTERMEDIATE RIPRAP.

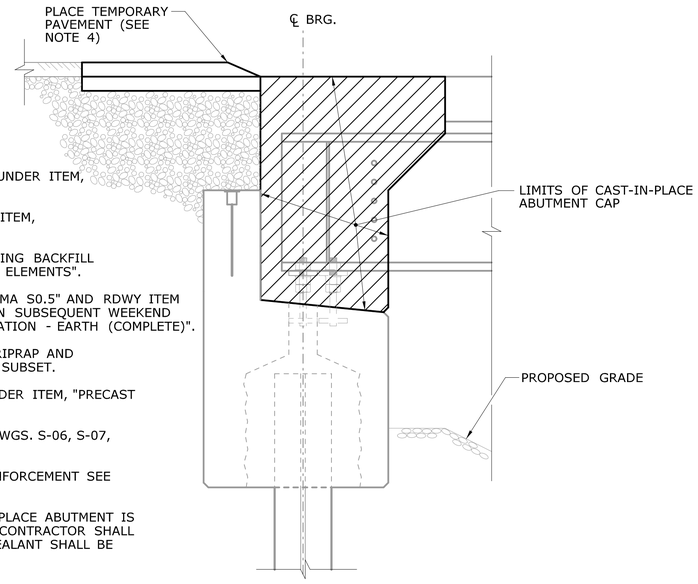

WEEKEND NO. 4: CAST-IN-PLACE ABUTMENT

SCALE: $1\frac{1}{2}$" = 1'-0"

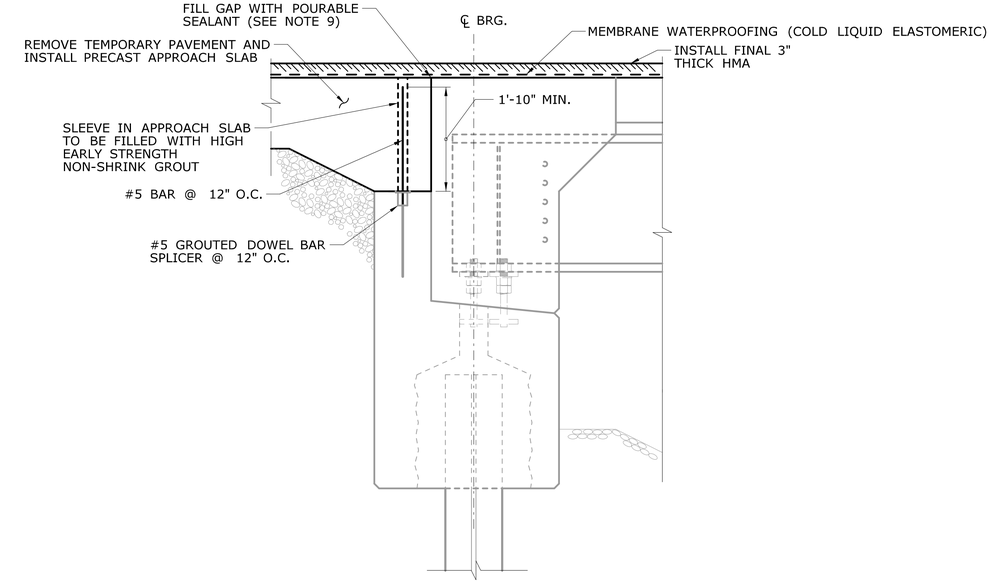

WEEKEND NO. 5: APPROACH SLAB PLACEMENT

SCALE: $1\frac{1}{2}$" = 1'-0"

REV.	DATE	REVISION DESCRIPTION	SHEET NO.

THE INFORMATION, INCLUDING ESTIMATED QUANTITIES OF WORK, SHOWN ON THESE SHEETS IS BASED ON LIMITED INVESTIGATIONS BY THE STATE AND IS IN NO WAY WARRANTED TO INDICATE THE CONDITIONS OF ACTUAL QUANTITIES OF WORK WHICH WILL BE REQUIRED.

Plotted Date: 12/10/2014

DESIGNER/DRAFTER: G.T.G/J.C.G
CHECKED BY: O.S.J
SCALE AS NOTED

STATE OF CONNECTICUT
DEPARTMENT OF TRANSPORTATION

Filename: ...\SB_MSH_117_157_STGDET.dgn

SIGNATURE/BLOCK:

PARSONS BRINCKERHOFF
500 WINDING BROOK DR.
GLASTONBURY, CT 06033

PROJECT TITLE:
REPLACEMENT OF ROUTE 7 OVER NORWALK RIVER (BRIDGE NO. 02029)

TOWN: RIDGEFIELD

DRAWING TITLE: STAGING DETAILS 1

PROJECT NO. 117-157
DRAWING NO. S-09
SHEET NO. 05.10

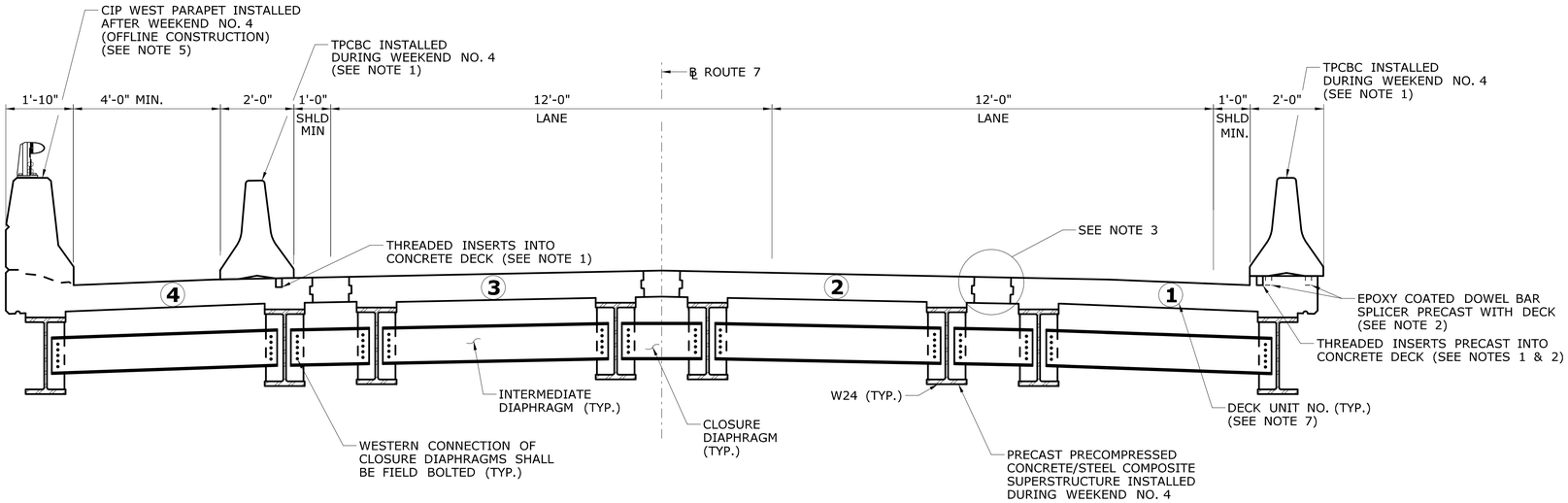

TYPICAL PROPOSED CROSS SECTION WEEKEND NO. 4

SCALE: ½" = 1'-0"

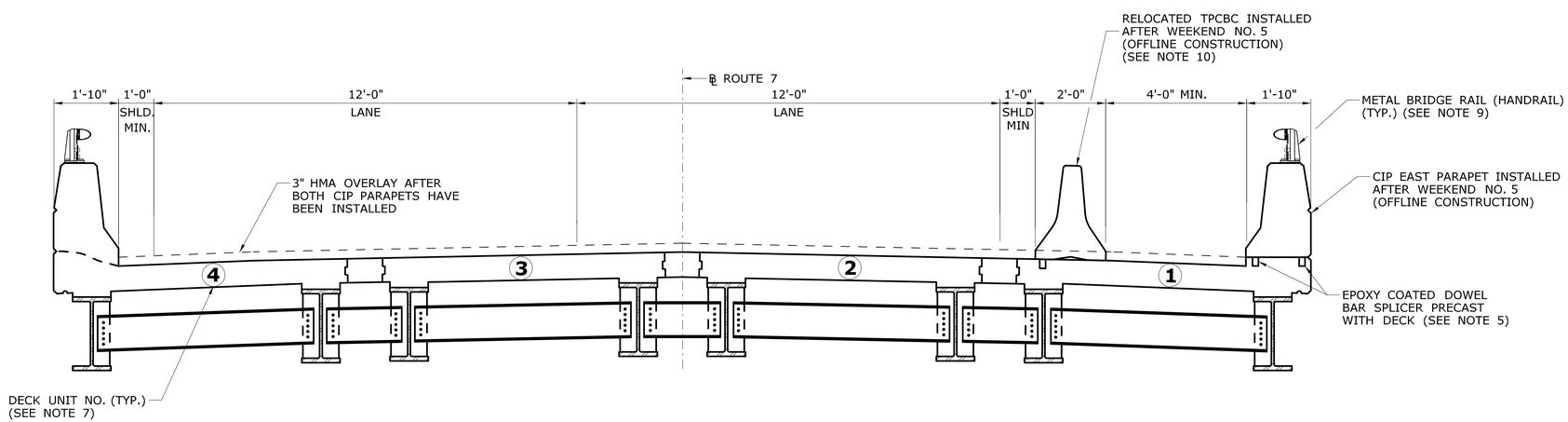

TYPICAL PROPOSED CROSS SECTION AFTER WEEKEND NO. 5

SCALE: ½" = 1'-0"

NOTES:

1. DECK UNIT NO. 1 & 4 SHALL BE PRECAST WITH THREADED INSERTS TO ACCOMMODATE THE TPCBC ANCHOR BOLTS. THE CONTRACTOR IS RESPONSIBLE FOR VERIFYING THE DRY-FIT OF TPCBC WITH THREADED INSERTS PRIOR TO THE WEEKEND CLOSURE TO ENSURE EASE OF ERECTION.
2. CONTRACTOR TO VERIFY IN SHOP PLACEMENT OF EPOXY COATED DOWEL BAR SPLICERS AND THREADED INSERTS FOR TPCBC ANCHORAGE TO ENSURE NO CONFLICT BETWEEN THEM AT UNIT NO. 1 CAST-IN-PLACE PARAPET LOCATION.
3. FOR "CLOSURE POUR DETAIL", SEE DWG. S-21.
4. FOR CONSTRUCTION SEQUENCE SEE DWGS. S-06, S-07, AND S-08.
5. THE EXTERIOR DECK UNIT NO. 1 SHALL BE CAST WITH EPOXY COATED DOWEL BAR SPLICERS AS SHOWN ON THE PLANS.
6. REINFORCING BARS FOR FASCIA BARRIER AT UNIT NO. 4 SHALL BE CAST WITH THE PRECAST DECK AND SHALL BE PAID UNDER ITEM, "PRECAST PRECOMPRESSED CONCRETE/STEEL COMPOSITE SUPERSTRUCTURE".
7. FOR FURTHER INFORMATION ON PRECAST DECK UNIT NOS. SEE DWG. S-20.
8. THE THREADED INSERTS FOR FASTENING TPCBC TO DECK UNITS NO. 1 & 4 SHALL BE PAID UNDER ITEM, "TEMPORARY PRECAST CONCRETE BARRIER CURB (STRUCTURE)".
9. FOR FURTHER DETAILS OF METAL BRIDGE RAIL (HANDRAIL), SEE DWG. S-25.
10. TPCBC INSTALLED AFTER WEEKEND NO. 5 ON DECK UNIT NO. 1 FOR EAST PARAPET CONSTRUCTION SHALL BE FASTENED TO DECK BY MEANS OF THREADED INSERTS. FOR MORE INFORMATION SEE DWG. S-26.

REV.	DATE	REVISION DESCRIPTION	SHEET NO.

THE INFORMATION, INCLUDING ESTIMATED QUANTITIES OF WORK, SHOWN ON THESE SHEETS IS BASED ON LIMITED INVESTIGATIONS BY THE STATE AND IS IN NO WAY WARRANTED TO INDICATE THE CONDITIONS OF ACTUAL QUANTITIES OF WORK WHICH WILL BE REQUIRED.

Plotted Date: 12/10/2014

DESIGNER/DRAFTER: G.T.G/G.L.L.
CHECKED BY: O.S.J
SCALE AS NOTED

STATE OF CONNECTICUT
DEPARTMENT OF TRANSPORTATION

Filename: ...\SB_MSH_117_157_SLAB.dgn

SIGNATURE/BLOCK:
PARSONS BRINCKERHOFF
500 WINDING BROOK DR.
GLASTONBURY, CT 06033

PROJECT TITLE:
REPLACEMENT OF ROUTE 7 OVER NORWALK RIVER (BRIDGE NO. 02029)

TOWN: RIDGEFIELD

DRAWING TITLE: STAGING DETAILS 2

PROJECT NO. 117-157
DRAWING NO. S-10
SHEET NO. 05.11

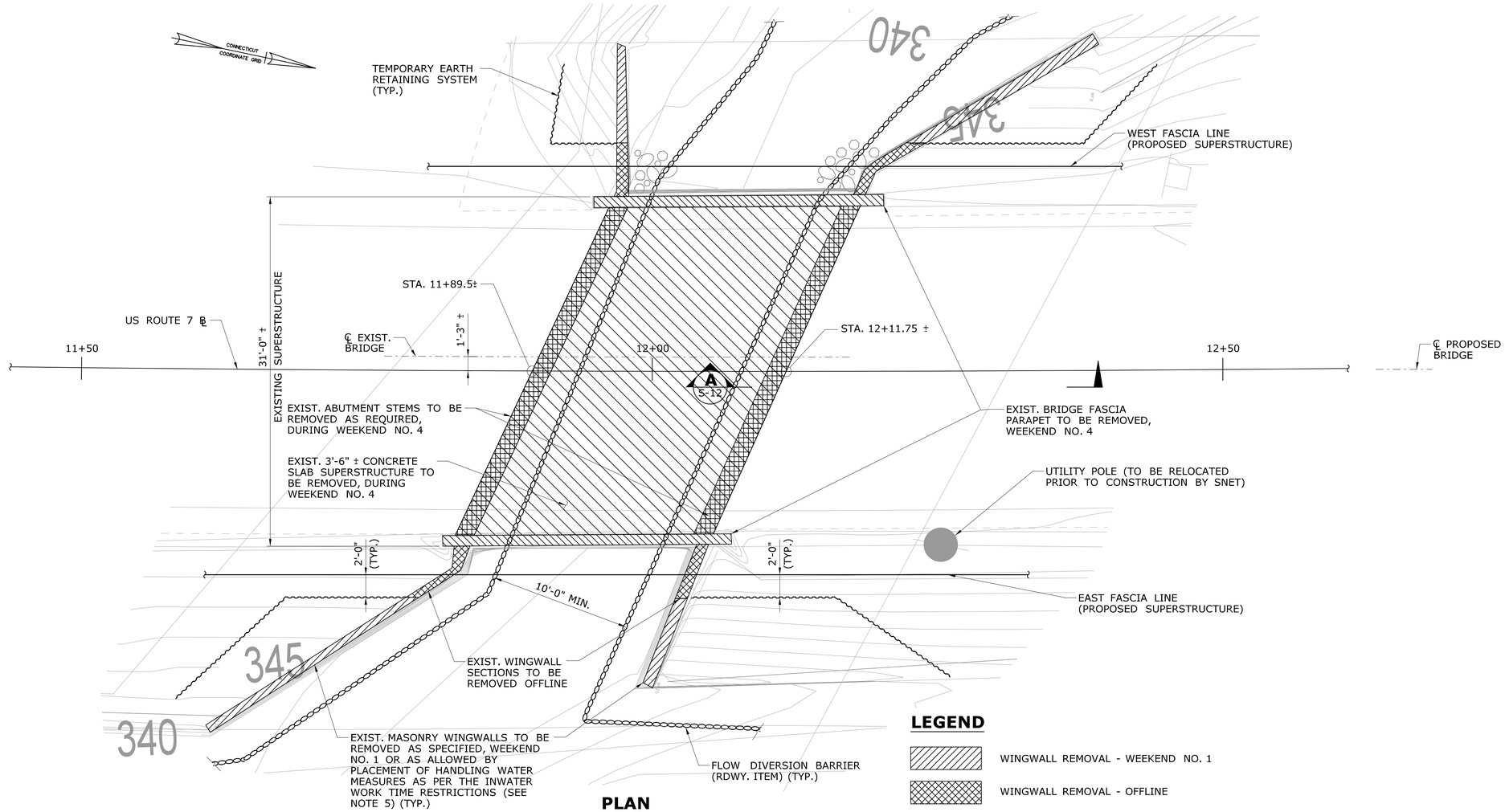

PLAN

SCALE: 3/16" = 1'-0"

LEGEND

- WINGWALL REMOVAL - WEEKEND NO. 1
- WINGWALL REMOVAL - OFFLINE
- SUPERSTRUCTURE REMOVAL - WEEKEND NO. 4
- ABUTMENT REMOVAL - WEEKEND NO. 4

NOTES:

1. REMOVAL OF EXISTING WINGWALLS AND ABUTMENTS SHALL BE PAID UNDER ITEM, "REMOVAL OF EXISTING MASONRY".
2. FOR LIMITS OF WINGWALL REMOVAL DURING WEEKEND NO. 1, SEE DWG. S-12.
3. EXISTING WINGWALLS AND ABUTMENTS TO BE REMOVED TO DEPTH 1'-0" BELOW PROPOSED GRADE.
4. REMOVAL OF EXISTING SUPERSTRUCTURE SHALL BE PAID UNDER ITEM, "REMOVAL OF SUPERSTRUCTURE".
5. NO UNCONFINED INWATER WORK WILL BE ALLOWED EXCEPT BETWEEN JUNE 1ST AND SEPTEMBER 30TH.
6. PROTECTIVE BARRIER SHALL BE INSTALLED IN ACCORDANCE WITH "REMOVAL OF SUPERSTRUCTURE" SPECIAL PROVISION.

REV.	DATE	REVISION DESCRIPTION	SHEET NO.

THE INFORMATION, INCLUDING ESTIMATED QUANTITIES OF WORK, SHOWN ON THESE SHEETS IS BASED ON LIMITED INVESTIGATIONS BY THE STATE AND IS IN NO WAY WARRANTED TO INDICATE THE CONDITIONS OF ACTUAL QUANTITIES OF WORK WHICH WILL BE REQUIRED.

Plotted Date: 12/10/2014

DESIGNER/DRAFTER: G.T.G/J.G.
CHECKED BY: O.S.J
SCALE AS NOTED

STATE OF CONNECTICUT
DEPARTMENT OF TRANSPORTATION

Filename: ...\SB_MSH_117_157_DEMOPLAN.dgn

SIGNATURE/BLOCK:
PARSONS BRINCKERHOFF
500 WINDING BROOK DR.
GLASTONBURY, CT 06033

PROJECT TITLE:
REPLACEMENT OF ROUTE 7 OVER NORWALK RIVER (BRIDGE NO. 02029)

TOWN: RIDGEFIELD

DRAWING TITLE: DEMOLITION PLAN

PROJECT NO. 117-157
DRAWING NO. S-11
SHEET NO. 05.12

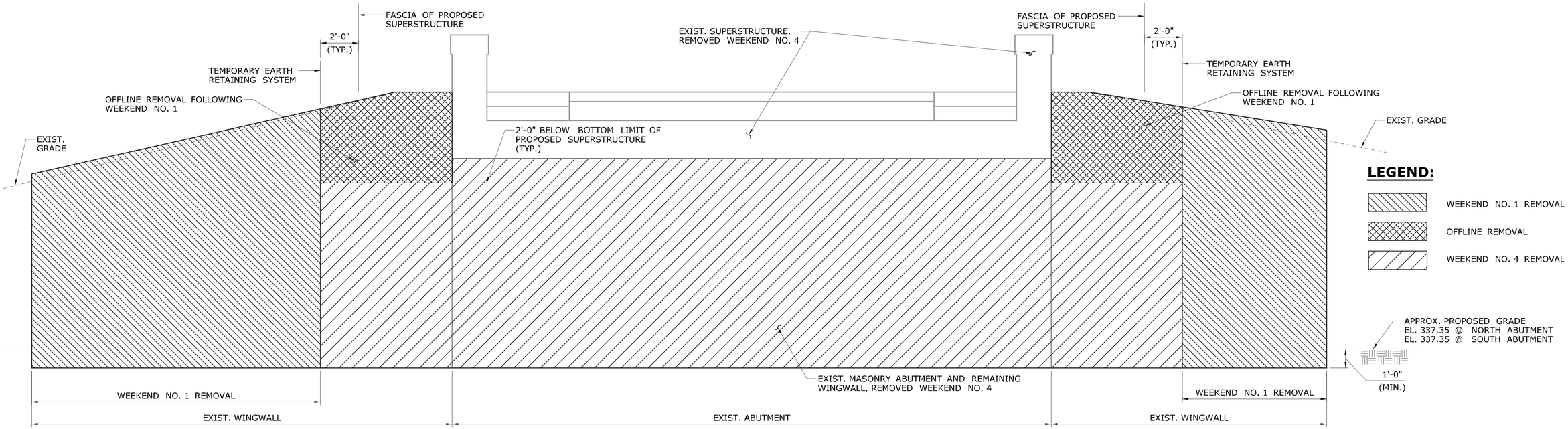

LEGEND:

- WEEKEND NO. 1 REMOVAL
- OFFLINE REMOVAL
- WEEKEND NO. 4 REMOVAL

TYPICAL SUBSTRUCTURE STAGE REMOVAL

SCALE : 3/8" = 1'-0"
(SOUTH ABUTMENT SHOWN, NORTH ABUTMENT SIMILAR)

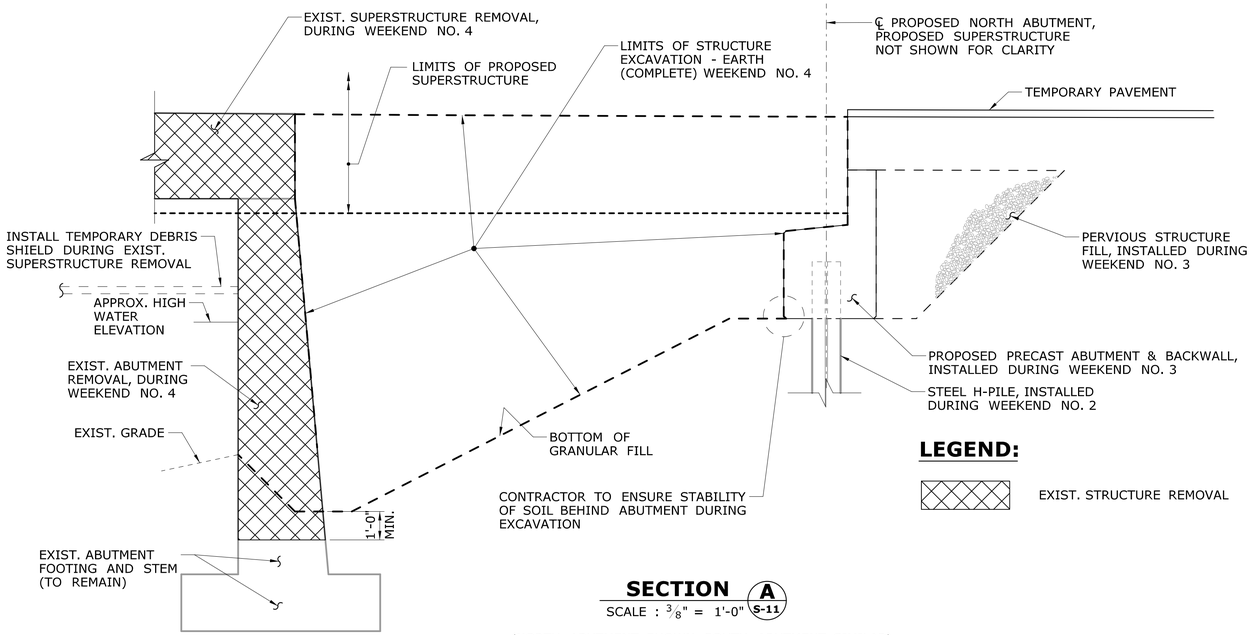

LEGEND:

- EXIST. STRUCTURE REMOVAL

SECTION A S-11

SCALE : 3/8" = 1'-0"

(NORTH ABUTMENT SHOWN, SOUTH ABUTMENT SIMILAR)
(NOTE: FLOW DIVERSION BARRIER (RDWY ITEM) NOT SHOWN FOR CLARITY)

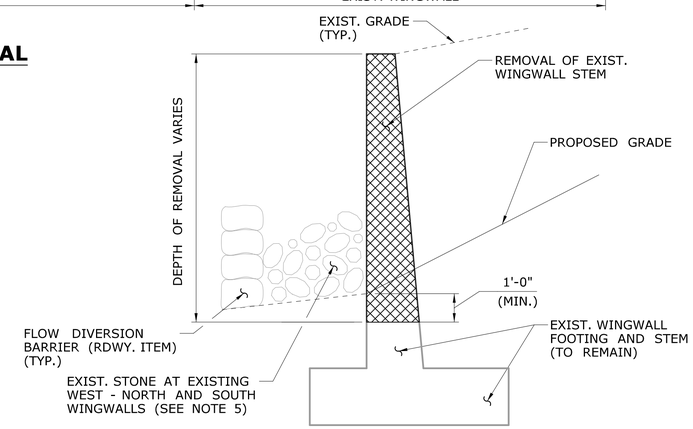

TYPICAL WINGWALL REMOVAL

SCALE : 3/8" = 1'-0"

NOTES:

1. EXCAVATION OF SOIL BEHIND WINGWALLS AND ABUTMENTS SHALL BE PAID UNDER ITEM, "STRUCTURE EXCAVATION - EARTH (COMPLETE)".
2. REMOVAL OF EXISTING WINGWALLS AND ABUTMENTS SHALL BE PAID UNDER ITEM, "REMOVAL OF EXISTING MASONRY".
3. REMOVAL OF EXISTING SUPERSTRUCTURE SHALL BE PAID UNDER ITEM, "REMOVAL OF SUPERSTRUCTURE".
4. FOR ADDITIONAL INFORMATION ON PROPOSED GRADE ELEVATION AT PROPOSED ABUTMENTS AND WINGWALLS, SEE DWG. S-01.
5. EXISTING STONE LOCATED AT EXISTING WEST - NORTH AND SOUTH WINGWALLS SHALL BE PROTECTED DURING CONSTRUCTION. IF DISRUPTION OF EXISTING FORMATION OCCURS, CONTRACTOR SHALL BE RESPONSIBLE FOR RESTORING THE STONE TO EXISTING CONDITION. NO EXTRA PAYMENT FOR THIS WORK WILL BE INCLUDED, COST OF THIS WORK WILL BE INCLUDED UNDER GENERAL COST OF JOB.
6. FOR MORE DETAILS OF GRANULAR FILL LIMITS SEE DETAIL, "RIPRAP FOR SLOPE PROTECTION DETAIL" DWG. MDS-01.

REV.	DATE	REVISION DESCRIPTION	SHEET NO.

THE INFORMATION, INCLUDING ESTIMATED QUANTITIES OF WORK, SHOWN ON THESE SHEETS IS BASED ON LIMITED INVESTIGATIONS BY THE STATE AND IS IN NO WAY WARRANTED TO INDICATE THE CONDITIONS OF ACTUAL QUANTITIES OF WORK WHICH WILL BE REQUIRED.

Plotted Date: 12/10/2014

DESIGNER/DRAFTER: G.T.G
CHECKED BY: O.S.J
SCALE AS NOTED

STATE OF CONNECTICUT
DEPARTMENT OF TRANSPORTATION

Filename: ...\SB_MSH_117_157_DEMDETS.dgn

SIGNATURE/BLOCK:

PARSONS BRINCKERHOFF
500 WINDING BROOK DR.
GLASTONBURY, CT 06033

PROJECT TITLE:
REPLACEMENT OF ROUTE 7 OVER NORWALK RIVER (BRIDGE NO. 02029)

TOWN: RIDGEFIELD

DRAWING TITLE: DEMOLITION DETAILS

PROJECT NO. 117-157
DRAWING NO. S-12
SHEET NO. 05.13

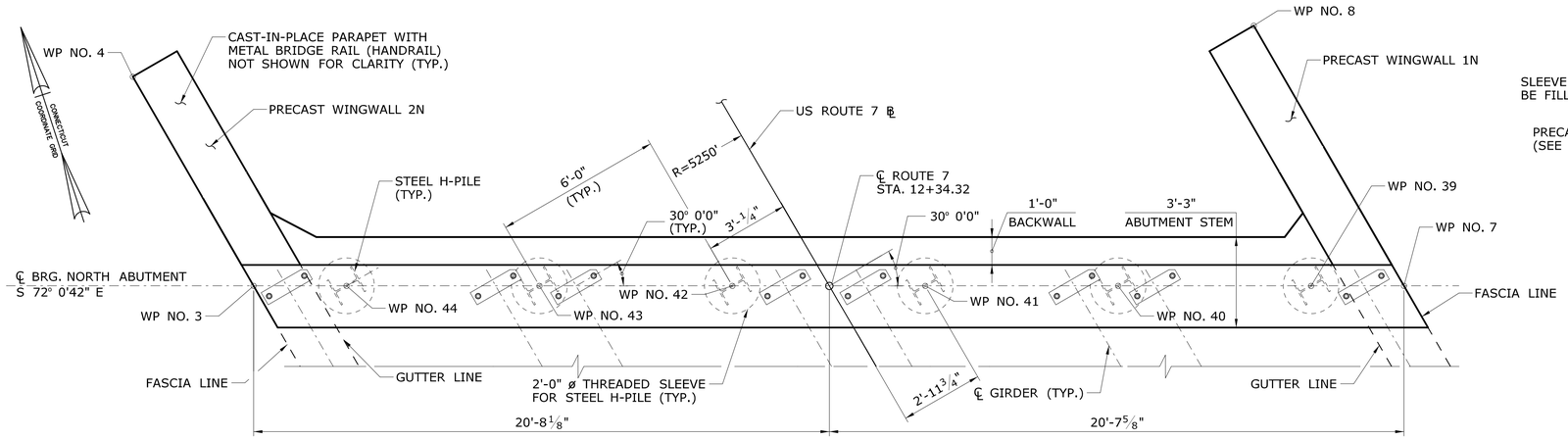

PLAN

SCALE: ⅜" = 1'-0"

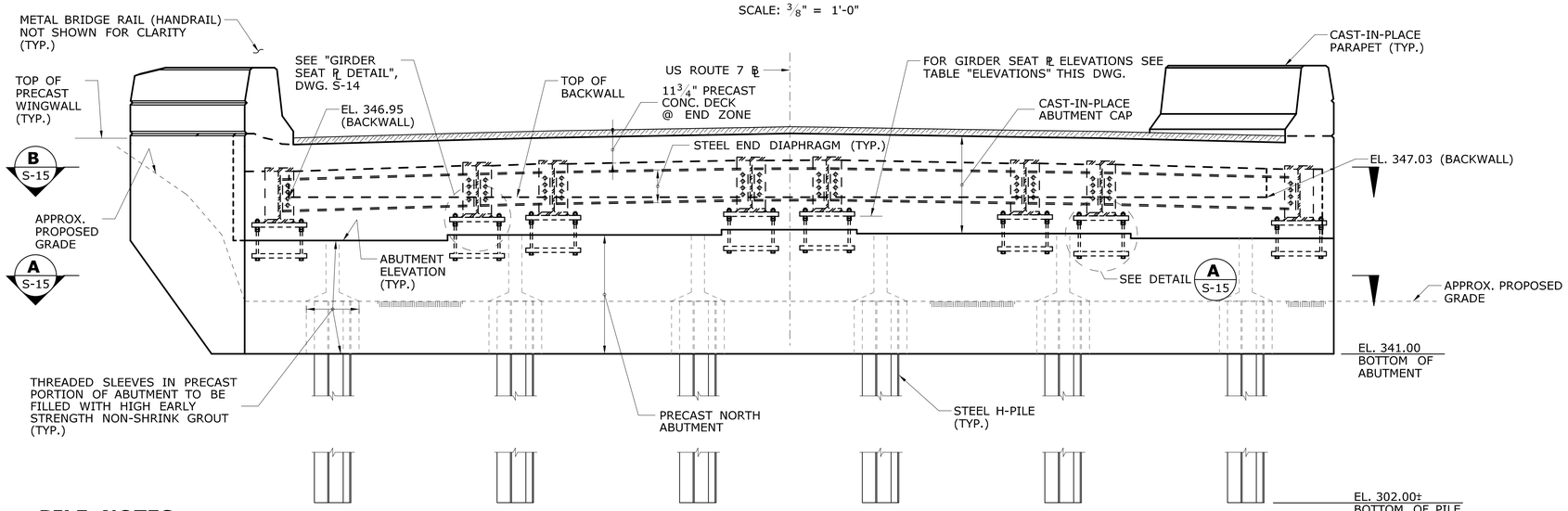

ELEVATION

SCALE: ⅜" = 1'-0"

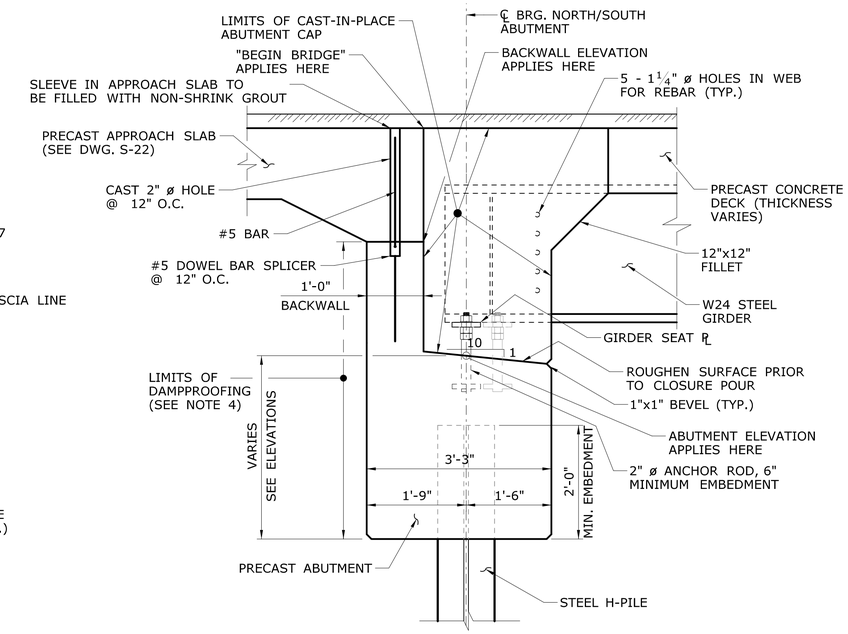

TYPICAL ABUTMENT DETAIL

SCALE: 3/4" = 1'-0"

ELEVATIONS

GIRDER	GIRDER SEAT ℄*	ABUTMENT
1	345.88	345.38
2	346.08	345.56
3	346.11	345.56
4	346.23	345.72
5	346.22	345.72
6	346.07	345.51
7	346.02	345.51
8	345.80	345.30

* SEE "DETAIL A", DWG. S-15

PILE NOTES:

1. ALL PILES SHALL BE HP12x74 (ASTM A709, GRADE 50).
2. ⊢ DENOTES PROPOSED VERTICAL PILE.
3. PILES SHALL BE DRIVEN TO REFUSAL ON BEDROCK.
4. NUMBER OF PILES = 6.
5. ESTIMATED LENGTH OF PILES = 42'-0"
6. PILES SHALL NOT BE SPLICED EXCEPT WITH THE APPROVAL OF THE ENGINEER. PREFABRICATED SPLICING DEVICES MAY BE USED AS APPROVED BY THE ENGINEER.
7. POINT REINFORCEMENT FOR STEEL PILES SHALL BE USED FOR ALL PILES. PREFABRICATED POINT REINFORCEMENT SHALL BE USED. THE CONTRACTOR IS REQUIRED TO SUBMIT PILE POINT REINFORCEMENT DETAILS TO THE ENGINEER FOR REVIEW AND APPROVAL.
8. PRIOR TO DRIVING PILES, THE CONTRACTOR SHALL SUBMIT TO THE ENGINEER FOR REVIEW AND APPROVAL, THE METHOD AND SEQUENCING OF PILE DRIVING.
9. MAX. DESIGN PILE LOAD: 122 KIPS FOR STRENGTH I
   96 KIPS FOR SERVICE I
10. LIMITS OF PAYMENT FOR PILES IS BASED ON ESTIMATED PILE LENGTH, ADDITIONAL PILE LENGTH MAY BE NEEDED FOR CONTRACTOR MEANS AND METHODS OF INSTALLATION. NO ADDITIONAL PAYMENT FOR THIS LENGTH AND CUTTING SHALL BE MADE.

NOTES:

1. FOR WORKING POINT COORDINATES, SEE DWG. S-03.
2. FOR PRECAST WINGWALL ELEVATIONS AND REINFORCEMENT SECTIONS, SEE DWG. S-16 TO S-18.
3. FOR PRECAST ABUTMENT REINFORCING DETAILS SEE DWG. S-15.
4. DAMPPROOFING OF ABUTMENTS AND WINGWALLS TO BE DONE DURING FABRICATION. CONTRACTOR SHALL COORDINATE WITH FABRICATOR THE APPLICATION OF DAMPPROOFING SO AS TO MINIMIZE POSSIBILITY OF ERROR IN APPLICATION.
5. PRECAST NORTH ABUTMENT CONCRETE, THREADED SLEEVES, NON-SHRINK GROUT, REINFORCEMENT, ANCHOR RODS, NUTS, WASHERS, ANCHOR PLATES & GIRDER SEAT PLATES SHALL BE PAID UNDER ITEM, "PRECAST SUBSTRUCTURE ELEMENTS".
6. ALL ABUTMENT AND GIRDER SEAT ELEVATIONS APPLY AT ℄ OF BEARING.
7. THE CAST-IN-PLACE ABUTMENT CAP CONCRETE AND REINFORCEMENT SHALL BE PAID UNDER ITEM, "PRECAST PRECOMPRESSED CONCRETE/STEEL COMPOSITE SUPERSTRUCTURE".
8. GIRDER SEAT PLATE AND ANCHOR PLATE SHALL CONFORM TO AASHTO M270, GRADE 50.
9. ANCHOR BOLT SHALL CONFORM TO AASHTO F 1554 GRADE 36.

REV.	DATE	REVISION DESCRIPTION	SHEET NO.

THE INFORMATION, INCLUDING ESTIMATED QUANTITIES OF WORK, SHOWN ON THESE SHEETS IS BASED ON LIMITED INVESTIGATIONS BY THE STATE AND IS IN NO WAY WARRANTED TO INDICATE THE CONDITIONS OF ACTUAL QUANTITIES OF WORK WHICH WILL BE REQUIRED.

Plotted Date: 12/10/2014

DESIGNER/DRAFTER: G.T.G/J.G.
CHECKED BY: O.S.J
SCALE AS NOTED

STATE OF CONNECTICUT
DEPARTMENT OF TRANSPORTATION

Filename: ...\SB_MSH_117_157_ABTS.dgn

SIGNATURE/BLOCK:
STATE OF CONNECTICUT INDUSTRY OF LICENSED PROFESSIONAL ENGINEER No. 20880

PARSONS BRINCKERHOFF
500 WINDING BROOK DR.
GLASTONBURY, CT 06033

PROJECT TITLE:
REPLACEMENT OF ROUTE 7 OVER NORWALK RIVER (BRIDGE NO. 02029)

TOWN: RIDGEFIELD

DRAWING TITLE: NORTH ABUTMENT PLAN AND ELEVATION

PROJECT NO. 117-157
DRAWING NO. S-13
SHEET NO. 05.14

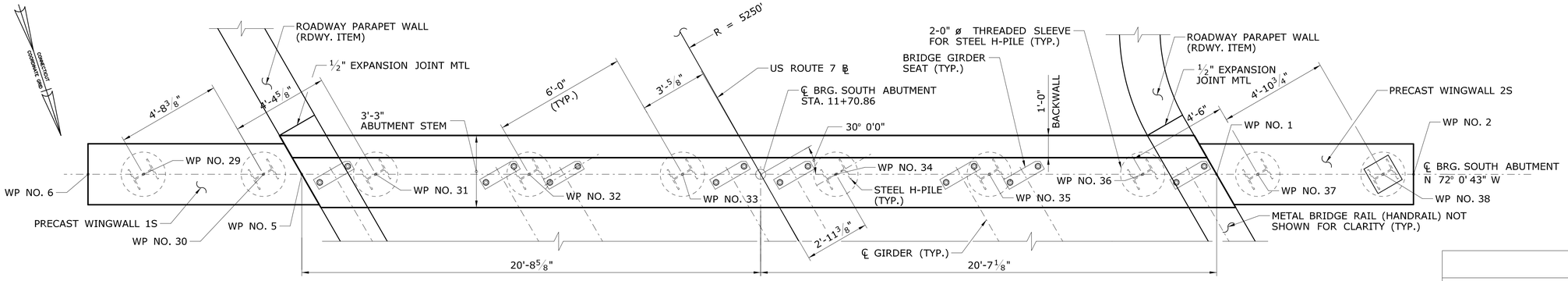

PLAN

SCALE: 3/8" = 1'-0"

ELEVATIONS		
GIRDER	GIRDER SEAT ℞*	ABUTMENT
1	346.16	345.66
2	346.35	345.84
3	346.39	345.84
4	346.51	346.00
5	346.50	346.00
6	346.35	345.80
7	346.30	345.80
8	346.09	345.59

*SEE "DETAIL A", SEE DWG. S-15

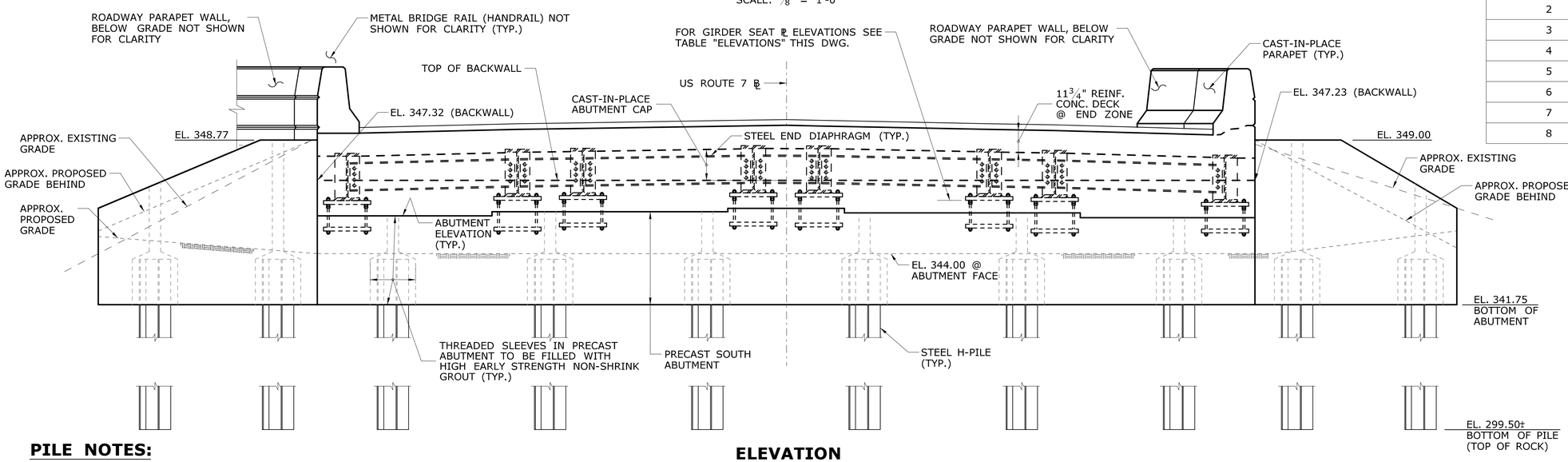

ELEVATION

SCALE: 3/8" = 1'-0"

PILE NOTES:

1. ALL PILES SHALL BE HP12x74 (ASTM A709, GRADE 50).
2. DENOTES PROPOSED VERTICAL PILE.
   DENOTES TEST PILE.
3. PILES SHALL BE DRIVEN TO REFUSAL ON BEDROCK.
4. NUMBER OF PILES = 10.
5. ESTIMATED LENGTH OF PILES = 44'-3"
6. PILES SHALL NOT BE SPLICED EXCEPT WITH THE APPROVAL OF THE ENGINEER. PREFABRICATED SPLICING DEVICES MAY BE USED AS APPROVED BY THE ENGINEER.
7. POINT REINFORCEMENT FOR STEEL PILES SHALL BE USED FOR ALL PILES. PREFABRICATED POINT REINFORCEMENT SHALL BE USED. THE CONTRACTOR IS REQUIRED TO SUBMIT PILE POINT REINFORCEMENT DETAILS TO THE ENGINEER FOR REVIEW AND APPROVAL.
8. PRIOR TO DRIVING PILES, THE CONTRACTOR SHALL SUBMIT TO THE ENGINEER FOR REVIEW AND APPROVAL, THE METHOD AND SEQUENCING OF PILE DRIVING.
9. SINGLE PDA TEST TO BE PERFORMED WITHIN WINGWALL 2S LIMITS.
   MAX. DESIGN PILE LOAD: 122 KIPS FOR STRENGTH I
   96 KIPS FOR SERVICE I
10. LIMITS OF PAYMENT FOR PILES IS BASED ON ESTIMATED PILE LENGTH, ADDITIONAL PILE LENGTH MAY BE NEEDED FOR CONTRACTOR MEANS AND METHODS OF INSTALLATION. NO ADDITIONAL PAYMENT FOR THIS LENGTH AND CUTTING SHALL BE MADE.

NOTES:

1. FOR WORKING POINT COORDINATES, SEE DWG. S-03.
2. FOR PRECAST WINGWALL ELEVATIONS AND REINFORCEMENT SECTIONS, SEE DWG. S-16 TO S-18.
3. FOR PRECAST ABUTMENT REINFORCING DETAILS SEE DWG. S-15.
4. DAMPPROOFING OF ABUTMENTS AND WINGWALLS TO BE DONE DURING FABRICATION. CONTRACTOR SHALL COORDINATE WITH FABRICATOR THE APPLICATION OF DAMPPROOFING SO AS TO MINIMIZE POSSIBILITY OF ERROR IN APPLICATION.
5. PRECAST NORTH ABUTMENT CONCRETE, THREADED SLEEVES, NON-SHRINK GROUT, REINFORCEMENT, ANCHOR RODS, NUTS, WASHERS, ANCHOR PLATES & GIRDER SEAT PLATES SHALL BE PAID UNDER ITEM, "PRECAST SUBSTRUCTURE ELEMENTS".
6. ALL ABUTMENT AND GIRDER SEAT ELEVATIONS APPLY AT ℄ OF BEARING.
7. THE CAST-IN-PLACE ABUTMENT CAP CONCRETE AND REINFORCEMENT SHALL BE PAID UNDER ITEM, "PRECAST PRECOMPRESSED CONCRETE/STEEL COMPOSITE SUPERSTRUCTURE".
8. GIRDER SEAT PLATE AND ANCHOR PLATE SHALL CONFORM TO AASHTO M270, GRADE 50.
9. ANCHOR BOLT SHALL CONFORM TO AASHTO F 1554 GRADE 36.

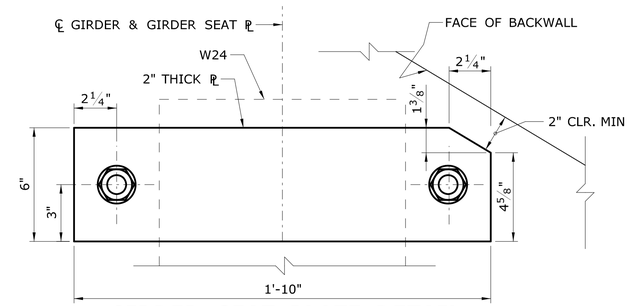

GIRDER SEAT PLATE DETAIL

SCALE: 3" = 1'-0"
(ANCHOR ℞ SIMILAR)

REV.	DATE	REVISION DESCRIPTION	SHEET NO.

THE INFORMATION, INCLUDING ESTIMATED QUANTITIES OF WORK, SHOWN ON THESE SHEETS IS BASED ON LIMITED INVESTIGATIONS BY THE STATE AND IS IN NO WAY WARRANTED TO INDICATE THE CONDITIONS OF ACTUAL QUANTITIES OF WORK WHICH WILL BE REQUIRED.

Plotted Date: 12/10/2014

DESIGNER/DRAFTER: G.T.G/J.G.
CHECKED BY: O.S.J
0 1' 2' 4'
SCALE 3/8"=1'-0"

STATE OF CONNECTICUT
DEPARTMENT OF TRANSPORTATION

Filename: ...\SB_MSH_117_157_ABTS-1.dgn

SIGNATURE/BLOCK:
PARSONS BRINCKERHOFF
500 WINDING BROOK DR.
GLASTONBURY, CT 06033

PROJECT TITLE:
REPLACEMENT OF ROUTE 7 OVER NORWALK RIVER (BRIDGE NO. 02029)

TOWN: RIDGEFIELD

DRAWING TITLE: SOUTH ABUTMENT PLAN AND ELEVATION

PROJECT NO. 117-157
DRAWING NO. S-14
SHEET NO. 05.15

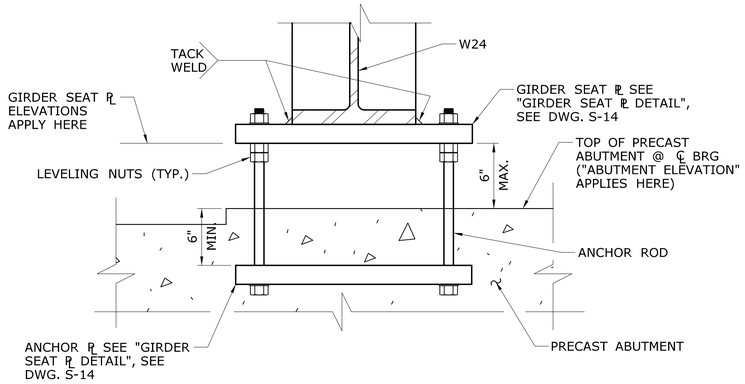

DETAIL A (S-13)
SCALE: 1½" = 1'-0"

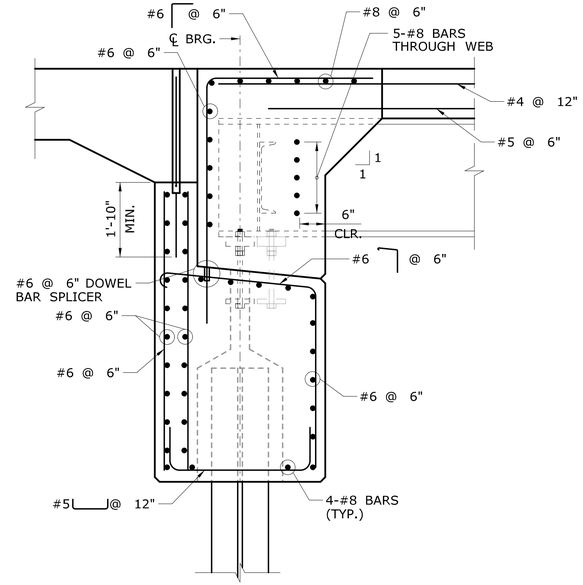

TYPICAL ABUTMENT REINFORCEMENT WITH GIRDER EMBEDMENT
SCALE: ¾" = 1'-0"

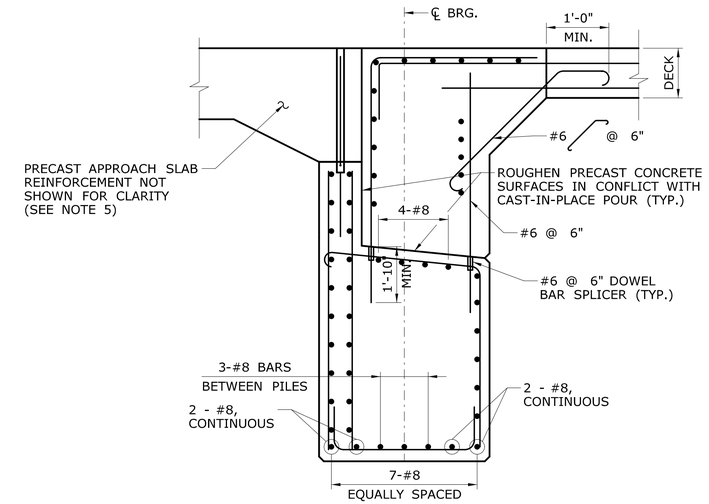

TYPICAL ABUTMENT REINFORCEMENT (BETWEEN GIRDERS)
SCALE: ¾" = 1'-0"

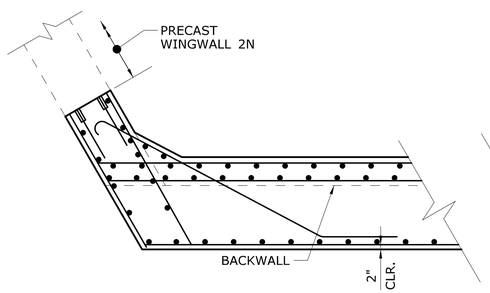

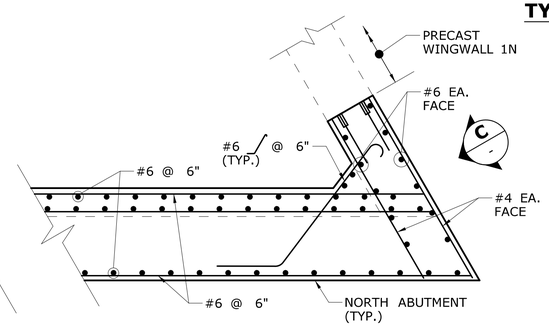

SECTION A (S-13)
SCALE: ⅜" = 1'-0"

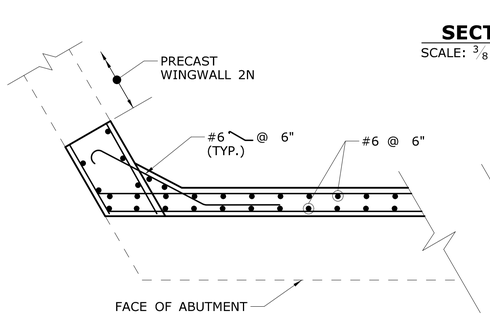

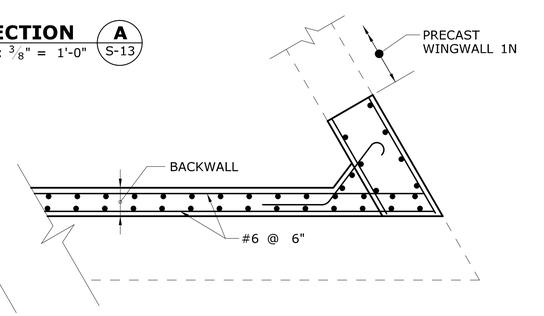

SECTION B (S-13)
SCALE: ⅜" = 1'-0"

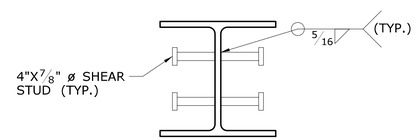

PLAN

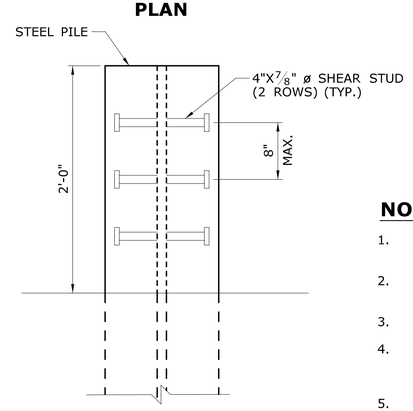

ELEVATION

PILE SHEAR STUD DETAIL
SCALE: ⅜" = 1'-0"

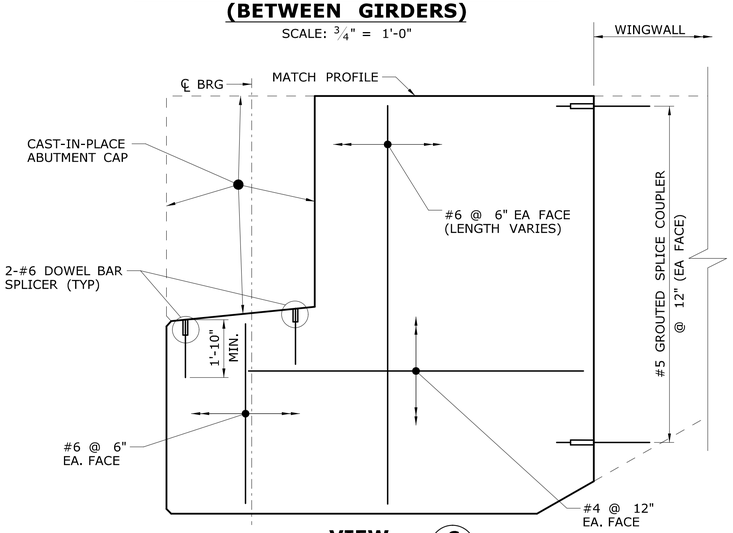

VIEW C (-)
SCALE: ¾" = 1'-0"
(EAST SHOWN, WEST SIMILAR)

NOTES:

1. ALL CONCRETE, THREADED SLEEVES, REINFORCEMENT, DOWEL BAR SPLICER SYSTEMS AND GROUTED SPLICE COUPLERS WITHIN PRECAST NORTH AND SOUTH ABUTMENT SHALL BE PAID UNDER ITEM, "PRECAST SUBSTRUCTURE ELEMENTS."
2. CAST-IN-PLACE NORTH AND SOUTH ABUTMENT CAP CONCRETE SHALL BE HIGH EARLY STRENGTH CONCRETE, AND SHALL BE PAID UNDER ITEM, "PRECAST PRECOMPRESSED CONCRETE/STEEL COMPOSITE SUPERSTRUCTURE".
3. ALL REINFORCEMENT SHALL BE ASTM A615, GRADE 60.
4. VERTICAL REINFORCEMENT AT FRONT FACE OF ABUTMENT CAP AND DOWEL BAR SPLICER EMBEDDED IN PRECAST ABUTMENT MUST BE PLACED SO AS NOT TO INTERFERE WITH GIRDER. SEE DETAIL "TYPICAL ABUTMENT REINFORCEMENT WITH GIRDER EMBEDMENT" FOR MORE INFORMATION.
5. FOR DETAILS OF APPROACH SLAB REINFORCING SEE DWG. S-22.
6. STUDS MAY BE FIELD OR SHOP WELDED AT THE OPTION OF THE CONTRACTOR AND SHALL BE PAID FOR UNDER ITEM, "FURNISHING STEEL PILES".
7. NO VEHICULAR TRAFFIC WILL BE ALLOWED ON THE SUPERSTRUCTURE UNLESS THE LONGITUDINAL CLOSURE POURS ARE CURED FOR A MINIMUM TIME AND COMPRESSIVE STRENGTH SPECIFIED IN THE SPECIAL PROVISION IS ACHIEVED.

REV.	DATE	REVISION DESCRIPTION	SHEET NO.

THE INFORMATION, INCLUDING ESTIMATED QUANTITIES OF WORK, SHOWN ON THESE SHEETS IS BASED ON LIMITED INVESTIGATIONS BY THE STATE AND IS IN NO WAY WARRANTED TO INDICATE THE CONDITIONS OF ACTUAL QUANTITIES OF WORK WHICH WILL BE REQUIRED.

Plotted Date: 12/10/2014

DESIGNER/DRAFTER: G.T.G/J.G.
CHECKED BY: O.S.J
SCALE AS NOTED

STATE OF CONNECTICUT
DEPARTMENT OF TRANSPORTATION

Filename: ...\SB_MSH_117_157_ABTDETS.dgn

SIGNATURE/BLOCK:
PARSONS BRINCKERHOFF
500 WINDING BROOK DR.
GLASTONBURY, CT 06033

PROJECT TITLE:
REPLACEMENT OF ROUTE 7 OVER NORWALK RIVER (BRIDGE NO. 02029)

TOWN: RIDGEFIELD

DRAWING TITLE: ABUTMENT DETAILS

PROJECT NO. 117-157
DRAWING NO. S-15
SHEET NO. 05.16

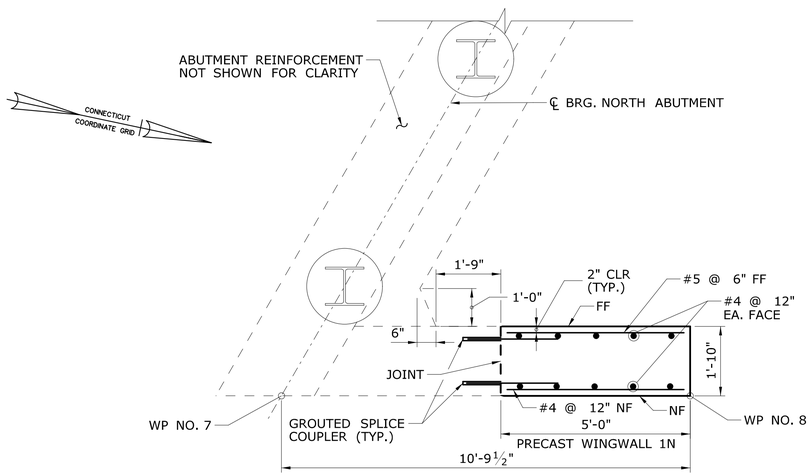

PLAN

(MBR ATTACHMENT & PARAPET NOT SHOWN FOR CLARITY - SEE NOTE 2)

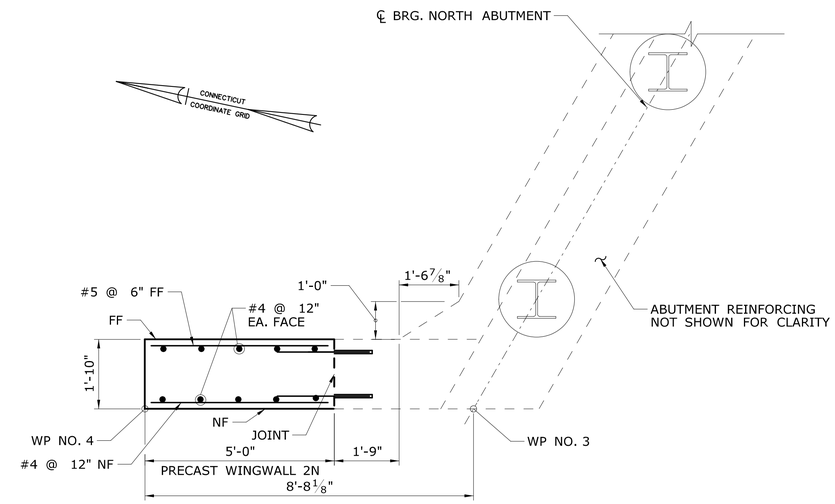

PLAN

(MBR ATTACHMENT & PARAPET NOT SHOWN FOR CLARITY - SEE NOTE 2)

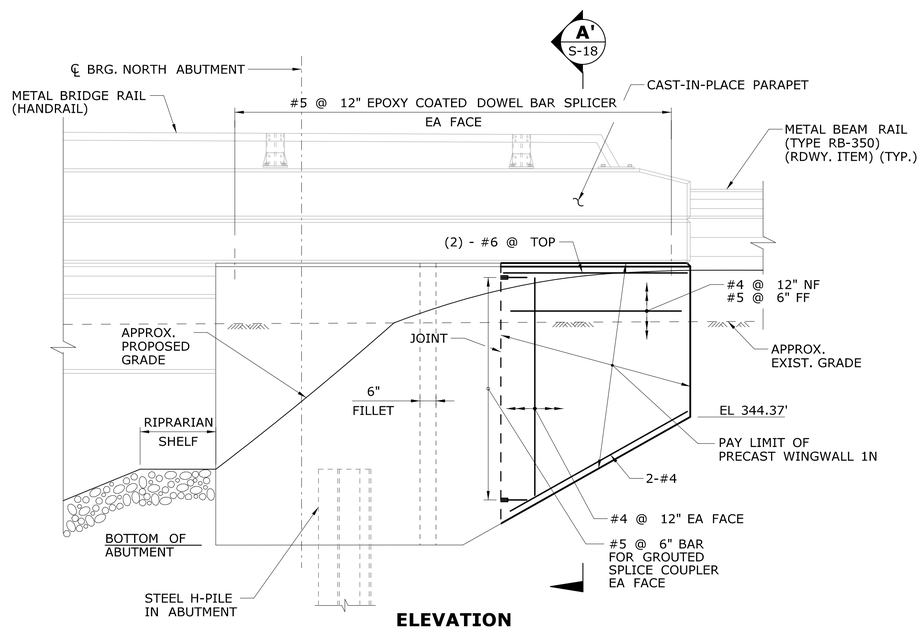

ELEVATION

PRECAST WINGWALL 1N

SCALE: ½" = 1'-0"

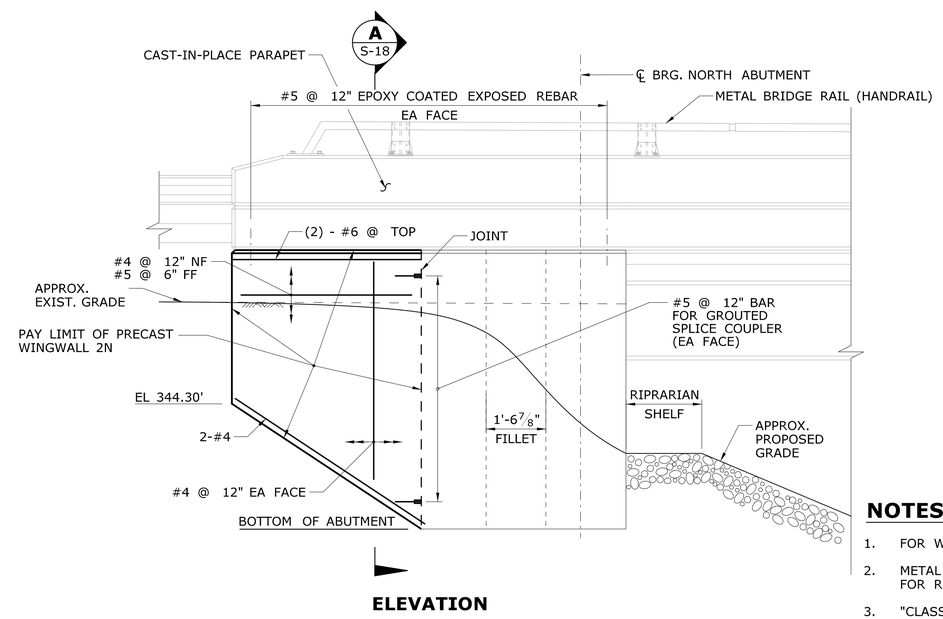

ELEVATION

PRECAST WINGWALL 2N

SCALE: ½" = 1'-0"

NOTES:

1. FOR WINGWALL SECTIONS, SEE DWG. S-18.
2. METAL BEAM RAIL (TYPE RB-350) NOT SHOWN IN DETAIL FOR CLARITY. FOR RB-350 BRIDGE ATTACHMENT DETAILS, SEE DWG. S-24.
3. "CLASS "F" CONCRETE" SHALL BE USED FOR CAST-IN-PLACE PARAPETS ON PRECAST WINGWALLS.
4. FOR WORKING POINT COORDINATES, SEE DWG. S-03.
5. ALL CONCRETE, THREADED SLEEVES, REINFORCEMENT, DOWEL BAR SPLICERS, AND GROUTED SPLICE COUPLERS IN THE PRECAST WINGWALLS SHALL BE PAID UNDER ITEM, "PRECAST SUBSTRUCTURE ELEMENTS".

REV.	DATE	REVISION DESCRIPTION	SHEET NO.

THE INFORMATION, INCLUDING ESTIMATED QUANTITIES OF WORK, SHOWN ON THESE SHEETS IS BASED ON LIMITED INVESTIGATIONS BY THE STATE AND IS IN NO WAY WARRANTED TO INDICATE THE CONDITIONS OF ACTUAL QUANTITIES OF WORK WHICH WILL BE REQUIRED.

Plotted Date: 12/10/2014

DESIGNER/DRAFTER: G.T.G/G.L.L.
CHECKED BY: O.S.J
SCALE AS NOTED

STATE OF CONNECTICUT
DEPARTMENT OF TRANSPORTATION

Filename: ...\SB_MSH_117_157_WWALL.dgn

SIGNATURE/BLOCK:

PARSONS BRINCKERHOFF
500 WINDING BROOK DR.
GLASTONBURY, CT 06033

PROJECT TITLE:
REPLACEMENT OF ROUTE 7
OVER NORWALK RIVER
(BRIDGE NO. 02029)

TOWN: RIDGEFIELD

DRAWING TITLE: PRECAST WINGWALLS 1N & 2N

PROJECT NO. 117-157
DRAWING NO. S-16
SHEET NO. 05.17

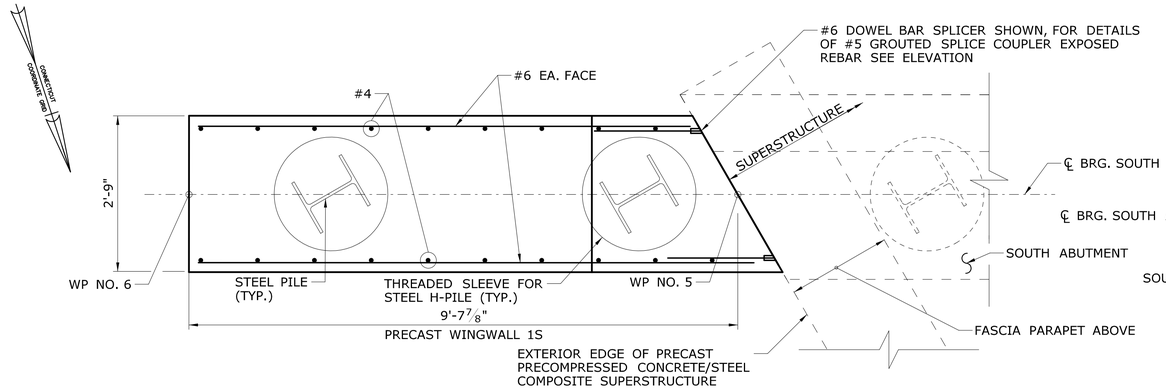

PLAN

B
S-18

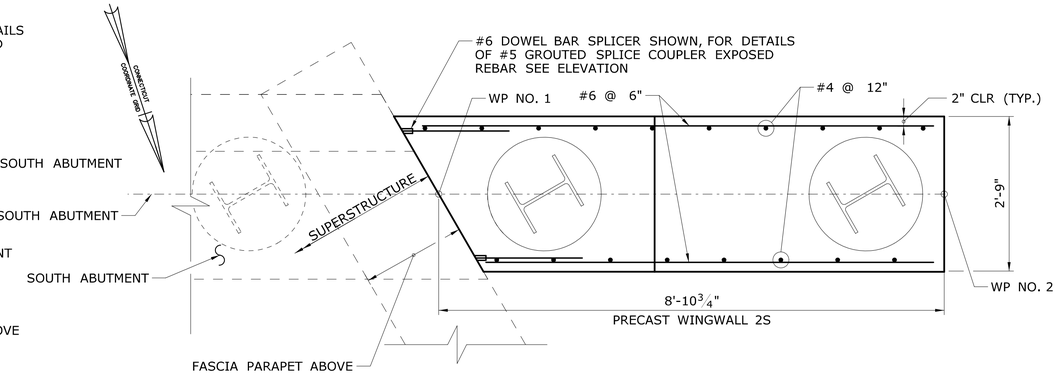

PLAN

B
S-18

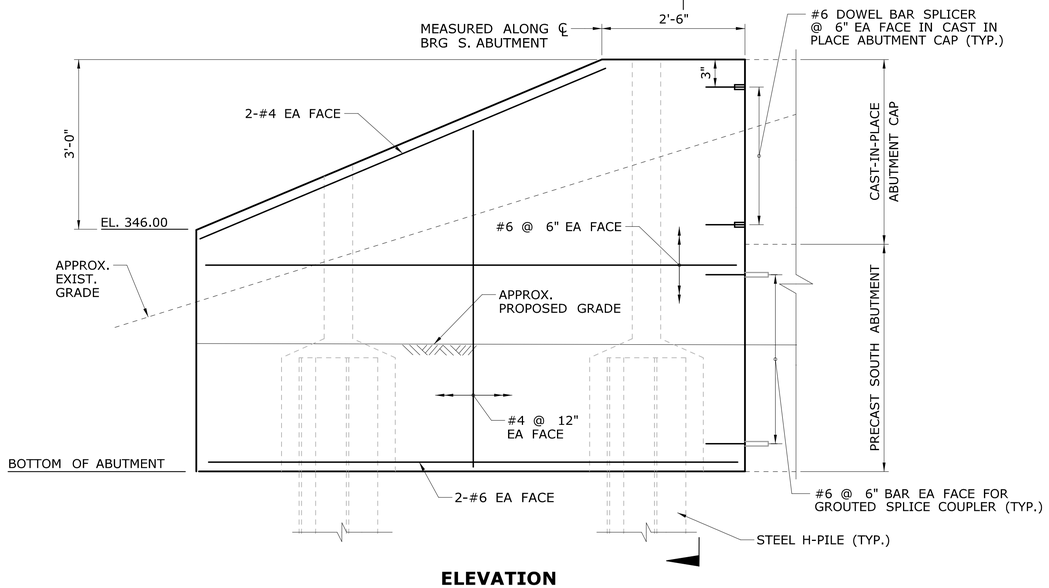

ELEVATION

PRECAST WINGWALL 1S

SCALE: 3/4" = 1'-0"

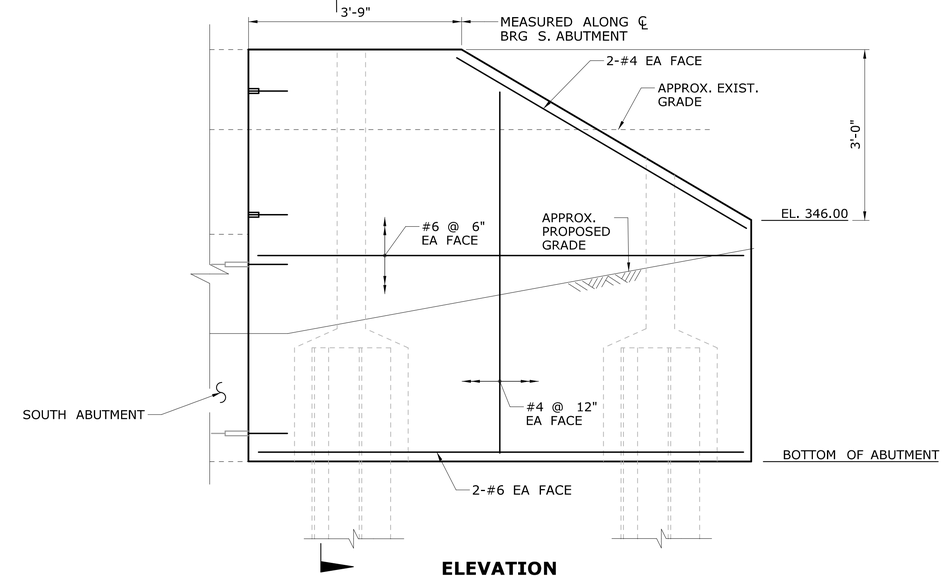

ELEVATION

PRECAST WINGWALL 2S

SCALE: 3/4" = 1'-0"

NOTES:

1. FOR WINGWALL SECTIONS, SEE DWG. S-18.
2. METAL BEAM RAIL (TYPE RB-350) NOT SHOWN IN DETAIL FOR CLARITY. FOR RB-350 BRIDGE ATTACHMENT DETAILS, SEE DWG. S-24.
3. FOR WORKING POINT COORDINATES, SEE DWG. S-03.
4. ALL CONCRETE AND REINFORCEMENT IN THE WINGWALL SHALL BE PAID UNDER ITEM, "PRECAST SUBSTRUCTURE ELEMENTS".
5. FOR REINFORCEMENT DETAILS OF SOUTH ABUTMENT SEE DWG. S-15.
6. REINFORCEMENT IN WINGWALLS SHALL BE PLACED SO AS TO LEAVE 2" MIN. CLR TO THREAD SLEEVES AND SHALL BE COORDINATED WITH PLACEMENT OF GROUTED SPLICE COUPLERS AND DOWEL BAR SPLICERS.
7. IT IS THE CONTRACTOR'S RESPONSIBILITY TO VERIFY THE FIT OF GROUTED SPLICE COUPLERS.

REV.	DATE	REVISION DESCRIPTION	SHEET NO.

THE INFORMATION, INCLUDING ESTIMATED QUANTITIES OF WORK, SHOWN ON THESE SHEETS IS BASED ON LIMITED INVESTIGATIONS BY THE STATE AND IS IN NO WAY WARRANTED TO INDICATE THE CONDITIONS OF ACTUAL QUANTITIES OF WORK WHICH WILL BE REQUIRED.

Plotted Date: 12/10/2014

DESIGNER/DRAFTER: G.T.G./G.L.L.
CHECKED BY: O.S.J
SCALE AS NOTED

STATE OF CONNECTICUT
DEPARTMENT OF TRANSPORTATION

Filename: ...\SB_MSH_117_157_WWALL2.dgn

SIGNATURE/BLOCK:
PARSONS BRINCKERHOFF
500 WINDING BROOK DR.
GLASTONBURY, CT 06033

PROJECT TITLE:
REPLACEMENT OF ROUTE 7 OVER NORWALK RIVER (BRIDGE NO. 02029)

TOWN: RIDGEFIELD

DRAWING TITLE: PRECAST WINGWALLS 1S & 2S

PROJECT NO. 117-157
DRAWING NO. S-17
SHEET NO. 05.18

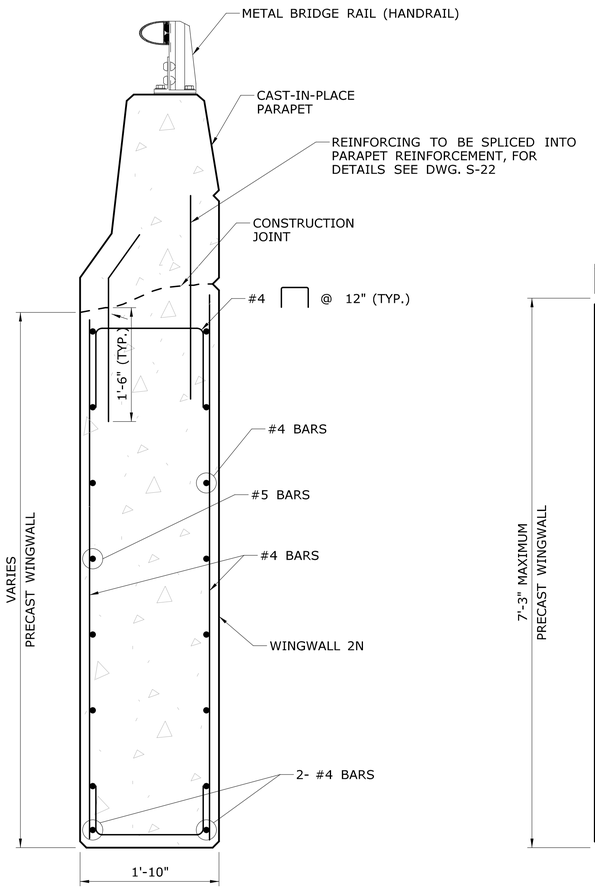

SECTION A
SCALE 1" = 1'-0" S-16

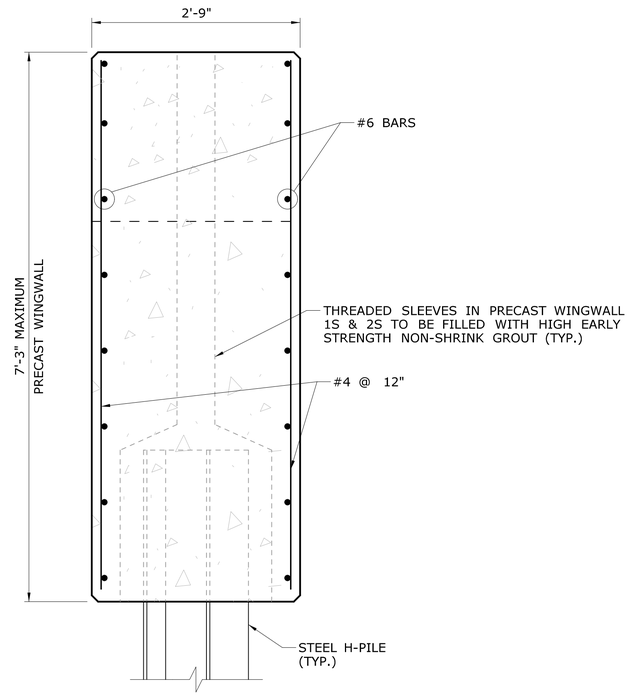

SECTION B
SCALE 1" = 1'-0" S-17

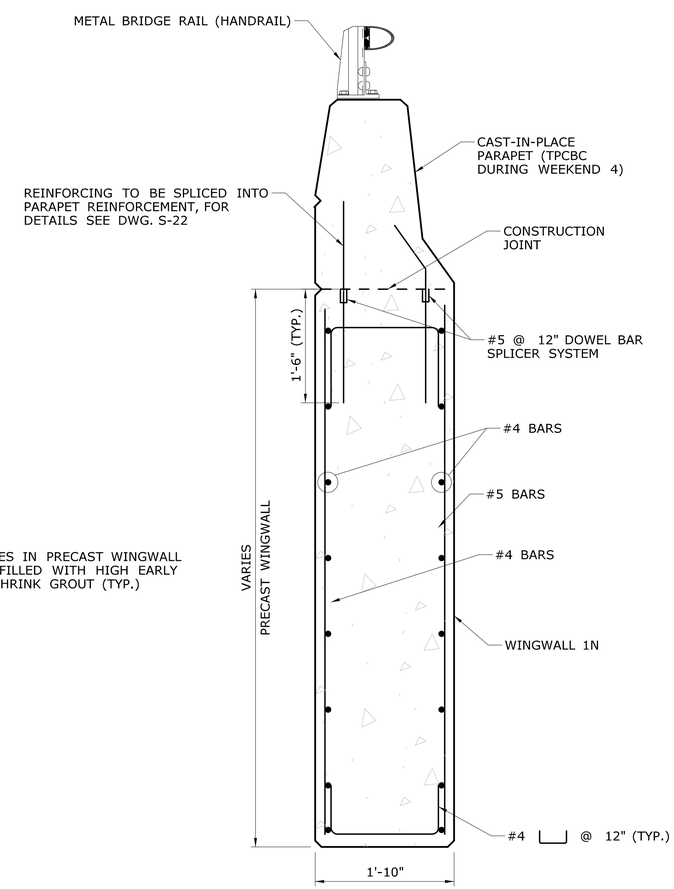

SECTION A'
SCALE 1" = 1'-0" S-16

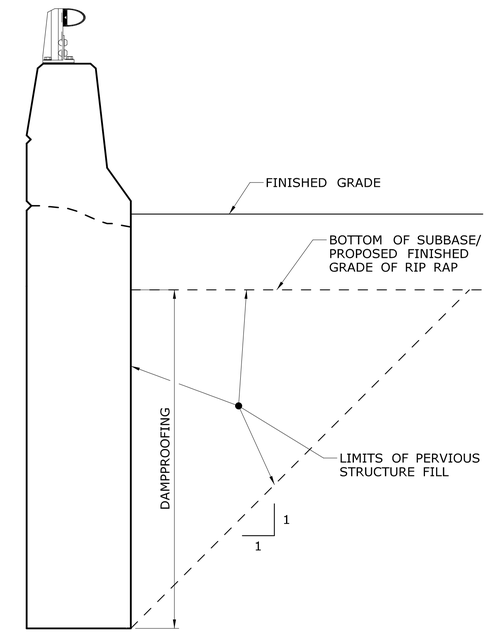

TYPICAL DAMPPROOFING LIMITS
N.T.S

NOTES:

1. FOR PARAPET REINFORCEMENT, SEE DWG. S-22.
2. THE WINGWALL 1N SHALL BE PRECAST WITH THREADED INSERTS TO ACCOMMODATE THE TPCBC ANCHOR BOLTS. THE CONTRACTOR IS RESPONSIBLE FOR VERIFYING THE DRY-FIT OF TPCBC WITH INSERTS PRIOR TO THE WEEKEND CLOSURE TO ENSURE EASE OF ERECTION.
3. CONTRACTOR TO VERIFY IN SHOP PLACEMENT OF EPOXY COATED DOWEL BAR SPLICERS AND THREADED INSERTS FOR TPCBC ANCHORAGE TO ENSURE NO CONFLICT BETWEEN THEM AT WINGWALL 1N.
4. DAMPPROOFING OF ABUTMENTS AND WINGWALLS TO BE DONE DURING FABRICATION. CONTRACTOR SHALL COORDINATE WITH FABRICATOR THE APPLICATION OF DAMPPROOFING SO AS TO MINIMIZE POSSIBILITY OF ERROR IN APPLICATION.

REV.	DATE	REVISION DESCRIPTION	SHEET NO.

THE INFORMATION, INCLUDING ESTIMATED QUANTITIES OF WORK, SHOWN ON THESE SHEETS IS BASED ON LIMITED INVESTIGATIONS BY THE STATE AND IS IN NO WAY WARRANTED TO INDICATE THE CONDITIONS OF ACTUAL QUANTITIES OF WORK WHICH WILL BE REQUIRED.

Plotted Date: 12/10/2014

DESIGNER/DRAFTER: G.T.G/G.L.L.
CHECKED BY: O.S.J
0 6" 1' 2'
SCALE 1"=1'-0"

STATE OF CONNECTICUT
DEPARTMENT OF TRANSPORTATION

Filename: ...\SB_MSH_117_157_WWALL3.dgn

SIGNATURE/ BLOCK:
PARSONS BRINCKERHOFF
500 WINDING BROOK DR.
GLASTONBURY, CT 06033

PROJECT TITLE:
REPLACEMENT OF ROUTE 7 OVER NORWALK RIVER (BRIDGE NO. 02029)

TOWN: RIDGEFIELD

DRAWING TITLE: PRECAST WINGWALL SECTIONS

PROJECT NO. 117-157
DRAWING NO. S-18
SHEET NO. 05.19

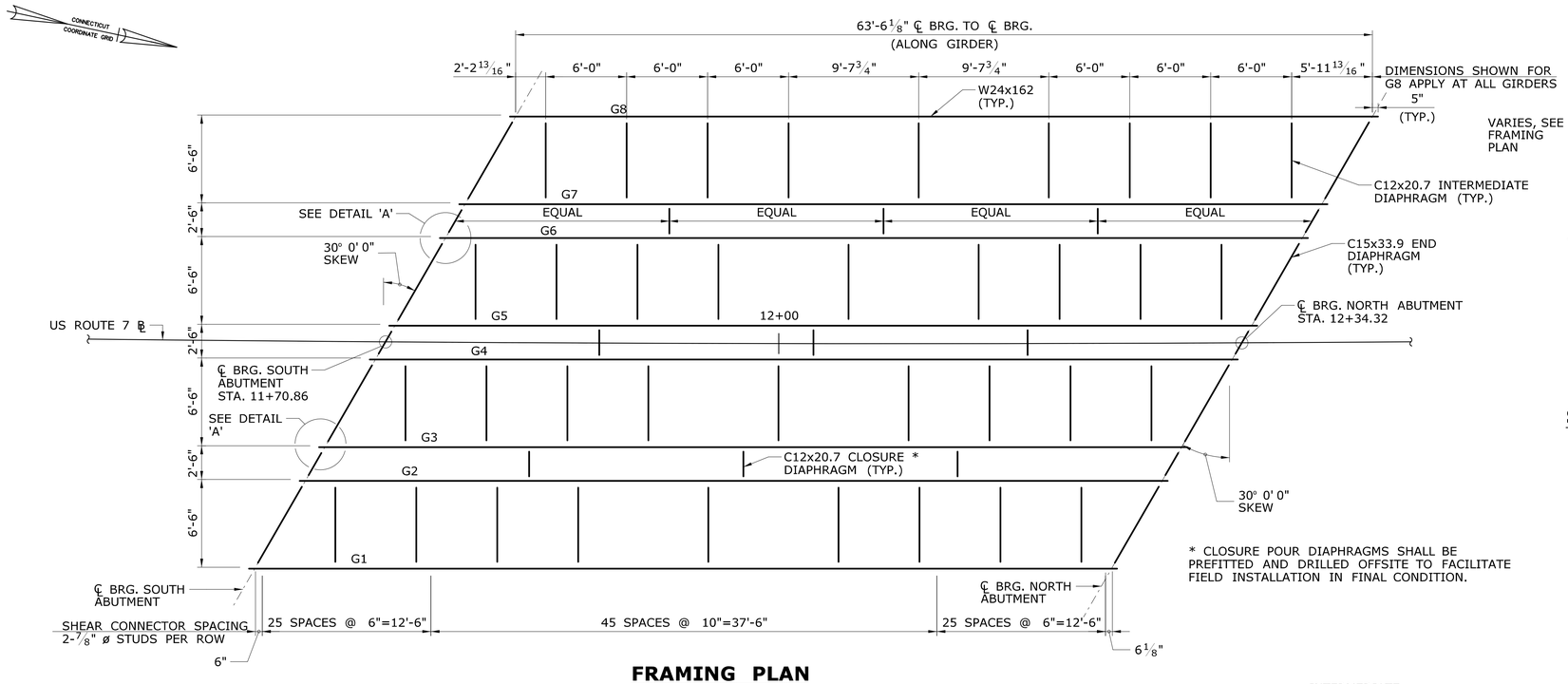

* CLOSURE POUR DIAPHRAGMS SHALL BE PREFITTED AND DRILLED OFFSITE TO FACILITATE FIELD INSTALLATION IN FINAL CONDITION.

FRAMING PLAN

SCALE: 3/16" = 1'-0"

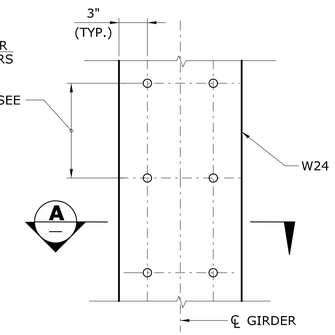

SHEAR CONNECTOR PLAN

NOT TO SCALE

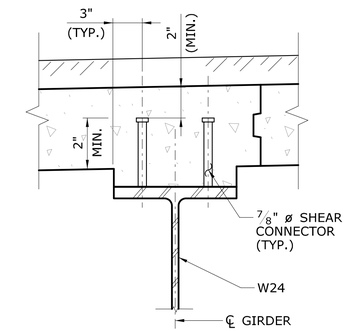

SECTION A

NOT TO SCALE

STRUCTURAL STEEL NOTES:

1. STRUCTURAL STEEL (LOW ALLOY) SHALL CONFORM TO AASHTO M270, GRADE 50 T2 AND SHALL BE GALVANIZED.
2. WELDING DETAILS, PROCEDURES AND TESTING METHODS SHALL CONFORM TO THE ANSI/AASHTO/AWS D1.5-2010 BRIDGE WELDING CODE, 6TH EDITION, WITH 2011 & 2012 INTERIM REVISIONS, UNLESS OTHERWISE NOTED ON THE PLANS.
3. FIELD SPLICES AND SHOP SPLICES IN STRUCTURAL STEEL ARE NOT ALLOWED ON THIS STRUCTURE.
4. ALL WEB TO BEARING STIFFENER AND BEARING STIFFENER TO FLANGE FILLET WELDS SHALL BE INSPECTED BY THE MAGNETIC PARTICLE METHOD.
5. MULTIPLE PASS WELDS, INSPECTED BY THE MAGNETIC PARTICLE METHOD SHALL HAVE EACH PASS OR LAYER INSPECTED AND ACCEPTED BEFORE PROCEEDING TO THE NEXT PASS OR LAYER, AS DETERMINED BY THE ENGINEER.
6. BEARING STIFFENERS AND THE ENDS OF GIRDERS SHALL BE VERTICAL AFTER THE APPLICATION OF FULL DEAD LOADS.
7. THE STRUCTURAL STEEL FABRICATORS SHALL BE CERTIFIED UNDER THE AISC QUALITY CONTROL PROGRAM AS NOTED BELOW:

   CATEGORY MBR - MAJOR STEEL BRIDGES

8. THE CONTRACTOR SHALL TAKE THE PROPER PRECAUTIONS TO ENSURE THE STABILITY OF ALL STRUCTURAL ELEMENTS UNTIL THE TOTAL STRUCTURE IS IN BEING.

HIGH STRENGTH BOLT NOTES:

1. ALL BOLTED CONNECTIONS SHALL BE "SLIP CRITICAL" CONNECTIONS WITH CLASS 'B' SURFACE CONDITIONS UNLESS OTHERWISE NOTED.
2. ALL HIGH STRENGTH BOLTS SHALL BE ASTM A325 TYPE 1 BOLTS IN STANDARD HOLES UNLESS NOTED OTHERWISE. BOLTS, NUTS AND WASHERS SHALL BE MECHANICALLY GALVANIZED IN ACCORDANCE WITH ASTM B695, CLASS 50.

FRAMING PLAN NOTES:

1. DIMENSIONS AT ENDS OF GIRDER ARE MEASURED ALONG THE ℄ OF BEARING.
2. ALL LENGTH DIMENSIONS ARE HORIZONTAL.
3. FOR GENERAL NOTES, SEE DWG. S-02.
4. FOR WORKING POINT COORDINATES, SEE DWG. S-03.

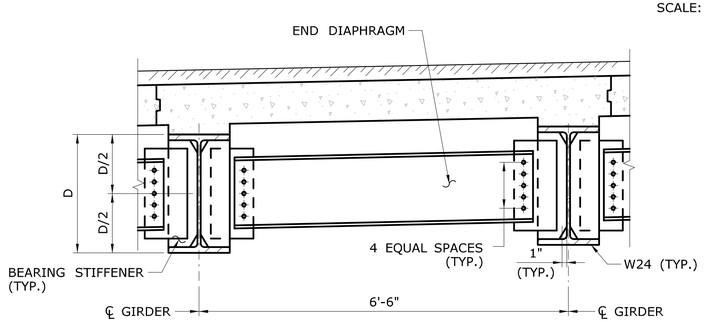

END DIAPHRAGM DETAIL

SCALE 3/4" = 1'-0"

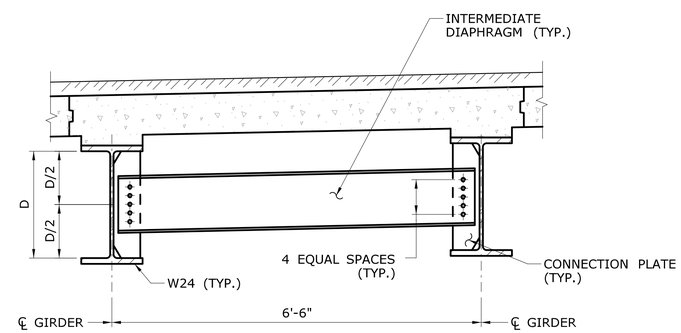

INTERMEDIATE DIAPHRAGM DETAIL

SCALE 3/4" = 1'-0"

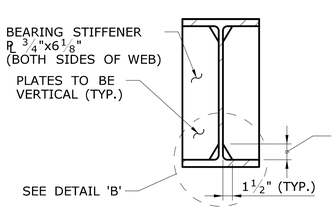

BEARING STIFFENER DETAIL

SCALE 1" = 1'-0"

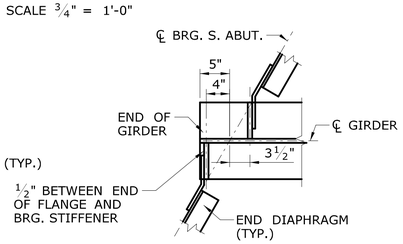

DETAIL 'A'

SCALE 1" = 1'-0"

(℄ BRG. S. ABUT. SHOWN, N. ABUT SIMILAR)

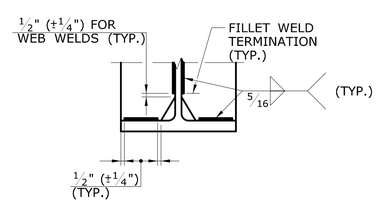

DETAIL 'B'

SCALE 1 1/2" = 1'-0"

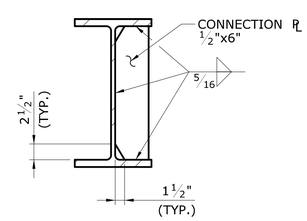

CONNECTION PLATE DETAIL

SCALE 1" = 1'-0"

DEFLECTIONS & CAMBERS

MARK	DEAD LOAD DEFLECTIONS @ C.L. OF SPAN			CAMBERS @ C.L. OF SPAN		
	STRUCTURAL STEEL	ADDITIONAL DEAD LOAD	COMPOSITE DEAD LOAD	TOTAL DEAD LOAD	EXTRA	TOTAL
G1	3/8	1 3/16	3/8	1 15/16	5/8	2 5/8
G2	3/8	1 1/4	3/8	2	5/8	2 5/8
G3	3/8	1 1/4	3/8	2	5/8	2 5/8
G4	3/8	1 1/4	3/8	2	5/8	2 5/8
G5	3/8	1 1/4	3/8	2	5/8	2 5/8
G6	3/8	1 1/4	3/8	2	5/8	2 5/8
G7	3/8	1 1/4	3/8	2	5/8	2 5/8
G8	3/8	1 3/16	3/8	1 15/16	5/8	2 5/8

REV.	DATE	REVISION DESCRIPTION	SHEET NO.

THE INFORMATION, INCLUDING ESTIMATED QUANTITIES OF WORK, SHOWN ON THESE SHEETS IS BASED ON LIMITED INVESTIGATIONS BY THE STATE AND IS IN NO WAY WARRANTED TO INDICATE THE CONDITIONS OF ACTUAL QUANTITIES OF WORK WHICH WILL BE REQUIRED.

Plotted Date: 12/10/2014

DESIGNER/DRAFTER: G.T.G/P.M.M.
CHECKED BY: O.S.J
0 2' 4' 8'
SCALE 3/16"=1'-0"

STATE OF CONNECTICUT
DEPARTMENT OF TRANSPORTATION

Filename: ...\SB_MSH_117_157_FRAMINGPLAN.dgn

SIGNATURE/BLOCK:
STATE OF CONNECTICUT JOHN R. LAMBERT III 36/20080 LICENSED PROFESSIONAL ENGINEER

PARSONS BRINCKERHOFF
500 WINDING BROOK DR.
GLASTONBURY, CT 06033

PROJECT TITLE:
REPLACEMENT OF ROUTE 7 OVER NORWALK RIVER (BRIDGE NO. 02029)

TOWN: RIDGEFIELD

DRAWING TITLE: FRAMING PLAN

PROJECT NO. 117-157
DRAWING NO. S-19
SHEET NO. 05.20

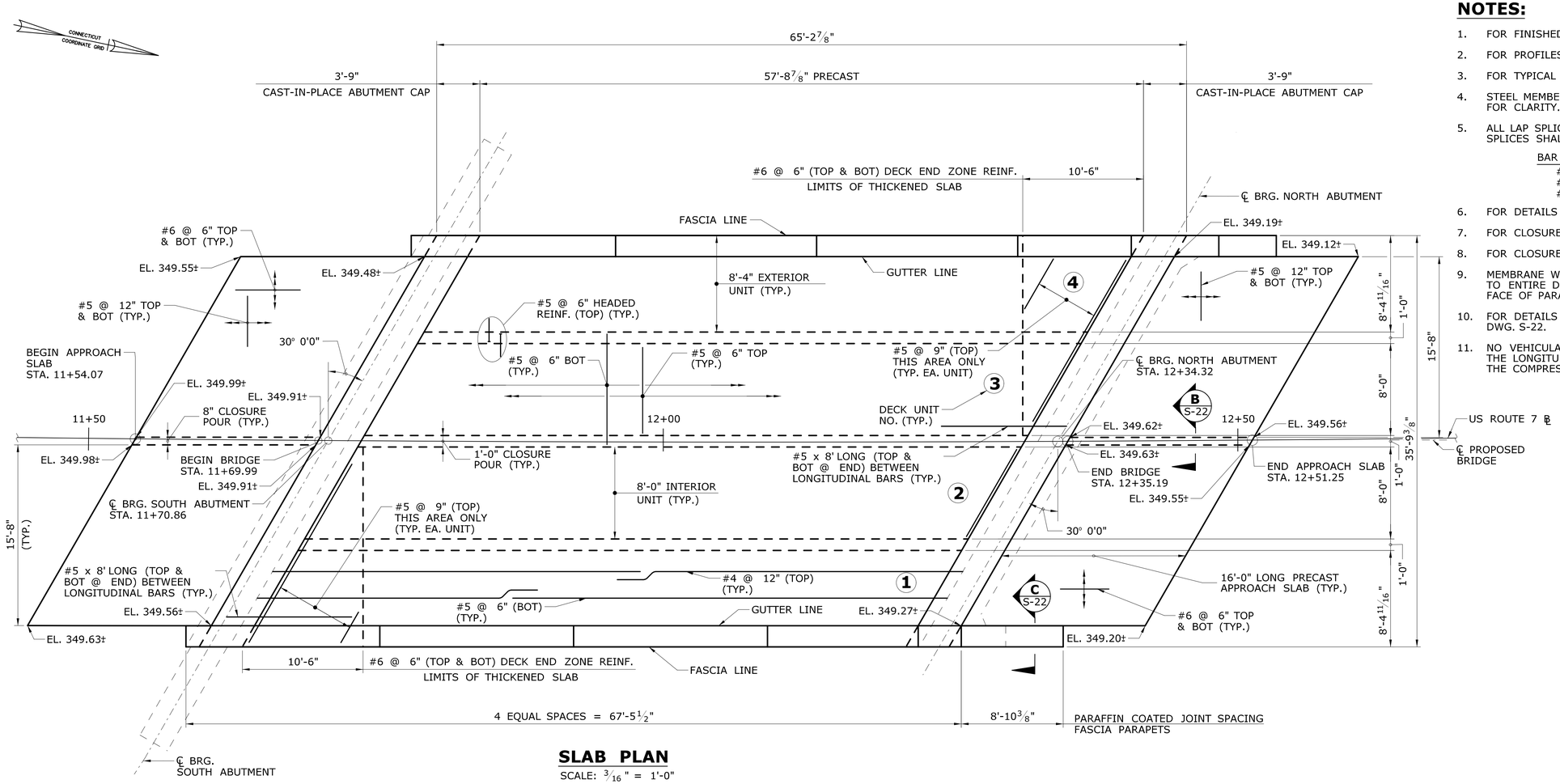

SLAB PLAN

SCALE: 3/16" = 1'-0"

NOTES:

1. FOR FINISHED SLAB ELEVATIONS, SEE DWG. S-21.
2. FOR PROFILES, SEE DWG. S-03.
3. FOR TYPICAL SLAB SECTIONS AND DETAILS, SEE DWG. S-21.
4. STEEL MEMBERS, DIAPHRAGMS AND GIRDERS NOT SHOWN IN SLAB PLAN FOR CLARITY.
5. ALL LAP SPLICES SHALL BE ALTERNATED A FULL LAP LENGTH. MINIMUM LAP SPLICES SHALL BE AS FOLLOWS:

BAR SIZE	SPLICE LENGTH (INCHES)
#4	15
#5	18
#6	22

6. FOR DETAILS OF PARAFFIN COATED JOINTS, SEE DWG. S-22.
7. FOR CLOSURE POUR DETAIL, SEE DWG. S-21.
8. FOR CLOSURE POUR REINFORCEMENT DETAILS SEE DWG. S-22.
9. MEMBRANE WATERPROOFING (COLD LIQUID ELASTOMERIC) SHALL BE APPLIED TO ENTIRE DECK AND APPROACH SLAB SURFACE, INCLUDING 3" RISE ON FACE OF PARAPET CURB.
10. FOR DETAILS OF PARAPET REINFORCING AT EAST AND WEST FASCIA SEE DWG. S-22.
11. NO VEHICULAR TRAFFIC WILL BE ALLOWED ON THE SUPERSTRUCTURE UNLESS THE LONGITUDINAL CLOSURE POURS ARE CURED FOR A MINIMUM TIME AND THE COMPRESSIVE STRENGTH SPECIFIED IN SPECIAL PROVISION IS ACHIEVED

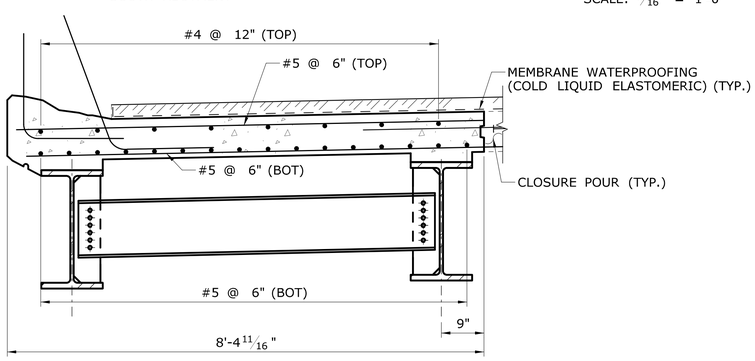

UNIT 4 DETAIL

SCALE: 3/4" = 1'-0"

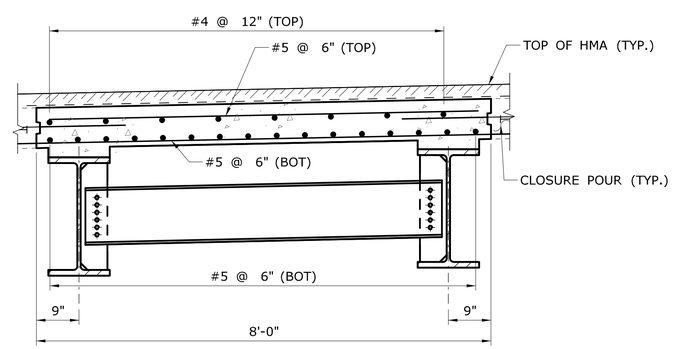

UNIT 2/3 DETAIL

SCALE: 3/4" = 1'-0"

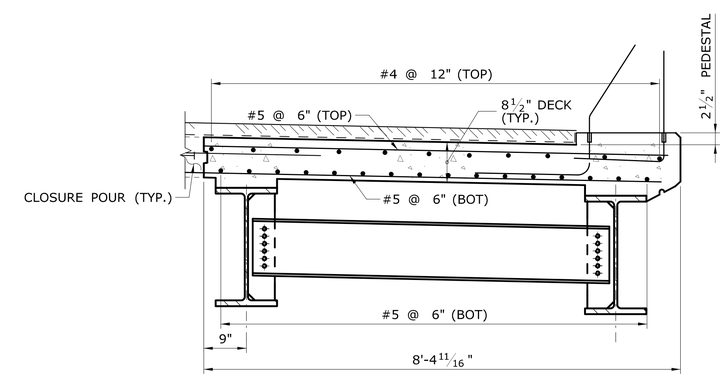

UNIT 1 DETAIL

SCALE: 3/4" = 1'-0"

REV.	DATE	REVISION DESCRIPTION	SHEET NO.

THE INFORMATION, INCLUDING ESTIMATED QUANTITIES OF WORK, SHOWN ON THESE SHEETS IS BASED ON LIMITED INVESTIGATIONS BY THE STATE AND IS IN NO WAY WARRANTED TO INDICATE THE CONDITIONS OF ACTUAL QUANTITIES OF WORK WHICH WILL BE REQUIRED.

Plotted Date: 12/10/2014

DESIGNER/DRAFTER: G.T.G/J.G.
CHECKED BY: O.S.J
SCALE AS NOTED

STATE OF CONNECTICUT
DEPARTMENT OF TRANSPORTATION

Filename: ...\SB_MSH_117_157_DECKPLAN.dgn

SIGNATURE/BLOCK:

PARSONS BRINCKERHOFF
500 WINDING BROOK DR.
GLASTONBURY, CT 06033

PROJECT TITLE:
REPLACEMENT OF ROUTE 7 OVER NORWALK RIVER (BRIDGE NO. 02029)

TOWN: RIDGEFIELD

DRAWING TITLE: SLAB PLAN

PROJECT NO. 117-157
DRAWING NO. S-20
SHEET NO. 05.21

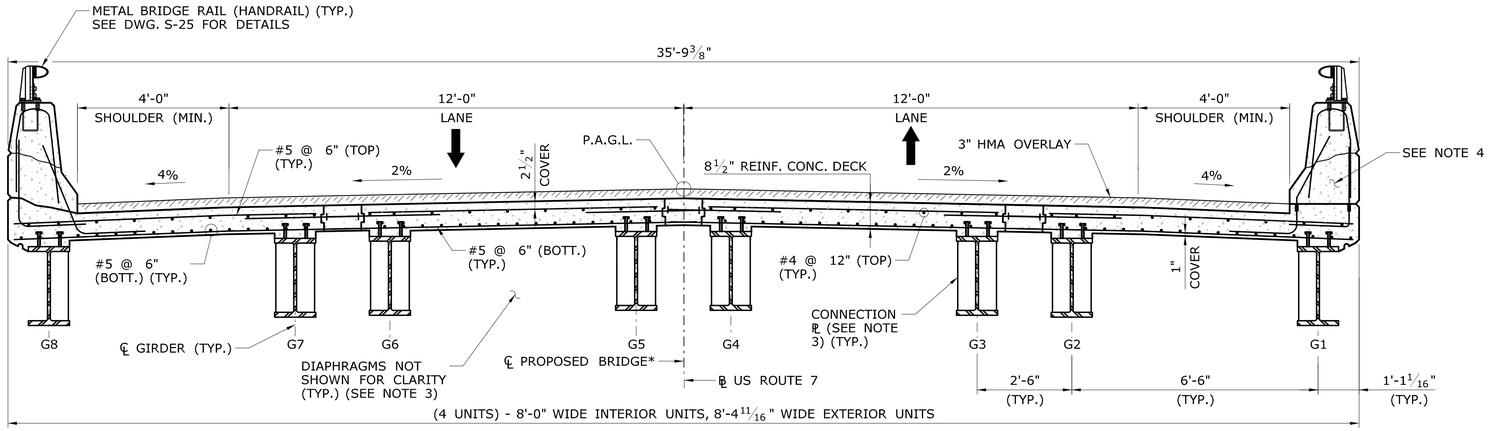

TYPICAL PROPOSED BRIDGE CROSS SECTION @ MIDSPAN

SCALE : 1/2" = 1'-0"

*DISTANCE FROM ℄ OF PROPOSED BRIDGE TO US ROUTE 7 ℄ VARIES OVER LENGTH OF BRIDGE, MINIMUM DISTANCE IS 1/4" AT ℄ BRG. NORTH ABUTMENT.

P.A.G.L. - POINT OF APPLICATION OF GRADE

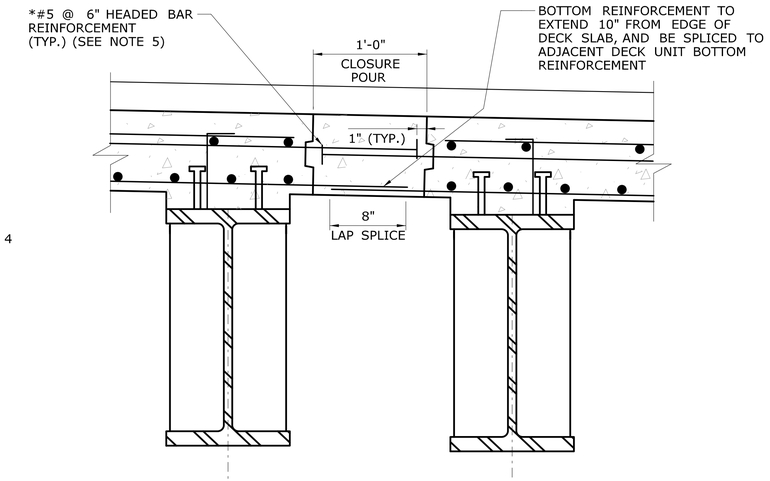

CLOSURE POUR DETAIL

SCALE : 1 1/2" = 1'-0"

*CONTRACTOR TO COORDINATE THE PLACEMENT OF REINFORCEMENT WITHIN PRECAST PRECOMPRESSED CONCRETE/STEEL COMPOSITE SUPERSTRUCTURE UNITS DURING FABRICATION SO AS TO AVOID ANY CONFLICTS WITH HEADED BAR REINFORCEMENT WITHIN THE LONGITUDINAL CLOSURE POURS.

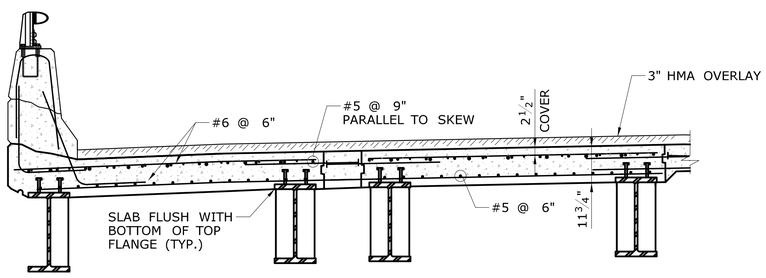

TYPICAL PROPOSED BRIDGE CROSS SECTION @ DECK END ZONE

SCALE : 1/2" = 1'-0"

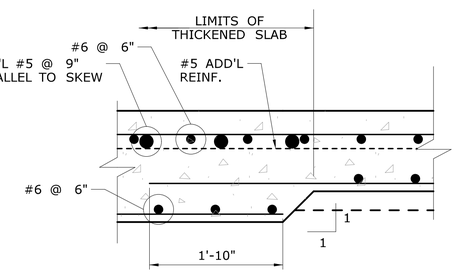

THICKENED SLAB TRANSITION DETAIL

SCALE : 1 1/2" = 1'-0"

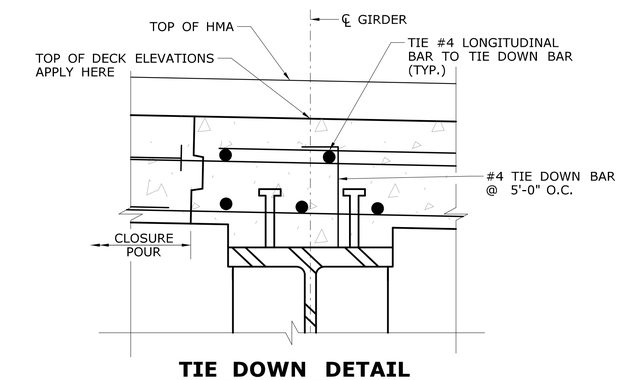

TIE DOWN DETAIL

SCALE : 2" = 1'-0"

TIE DOWN NOTES:

1. TIE-DOWN BARS DO NOT EXCLUDE THE USE OF CHAIRS FOR SUPPORTING THE REINFORCEMENT MAT.
2. THE COST OF FURNISHING AND PLACING TIE-DOWN BARS SHALL BE INCLUDED IN THE CONTRACT ITEM "PRECAST PRECOMPRESSED CONCRETE/STEEL COMPOSITE SUPERSTRUCTURE".
3. TIE-DOWN BARS AND LONGITUDINAL BARS SHALL CLEAR THE SHEAR CONNECTORS.

NOTES:

1. ALL REINFORCEMENT IN THE DECK SHALL BE EPOXY COATED AND SHALL BE PAID UNDER ITEM, "PRECAST PRECOMPRESSED CONCRETE/STEEL COMPOSITE SUPERSTRUCTURE".
2. FOR ADDITIONAL SLAB DETAILS, SEE DWGS. S-20 AND S-22.
3. FOR DETAILS OF CONNECTION PLATES AND DIAPHRAGMS SEE DWG. S-19.
4. FOR DETAILS OF PARAPET REINFORCEMENT SEE DWG. S-22.
5. FOR FURTHER DETAILS OF HEADED BAR REINFORCEMENT IN CLOSURE POUR SEE DWG. S-22.

TOP OF DECK ELEVATIONS ALONG ℄ OF GIRDERS

GIRDER	INCREMENT	℄ BRG S. ABUTMENT	1/11	2/11	3/11	4/11	5/11	6/11	7/11	8/11	9/11	10/11	℄ BRG N. ABUTMENT
1	5.293	349.53	349.51	349.48	349.46	349.44	349.41	349.39	349.37	349.34	349.32	349.51	349.27
2	5.293	349.72	349.69	349.67	349.65	349.62	349.60	349.58	349.55	349.53	349.51	349.48	349.46
3	5.293	349.76	349.74	349.71	349.69	349.67	349.64	349.62	349.60	349.57	349.55	349.53	349.50
4	5.293	349.88	349.85	349.83	349.81	349.78	349.76	349.74	349.71	349.69	349.67	349.64	349.62
5	5.293	349.87	349.85	349.82	349.80	349.78	349.75	349.73	349.71	349.68	349.66	349.64	349.62
6	5.293	349.72	349.70	349.68	349.65	349.63	349.61	349.58	349.56	349.54	349.51	349.49	349.47
7	5.293	349.67	349.64	349.62	349.60	349.57	349.55	349.53	349.50	349.48	349.46	349.44	349.41
8	5.293	349.46	349.43	349.41	349.39	349.36	349.34	349.32	349.29	349.27	349.25	349.22	349.20

REV.	DATE	REVISION DESCRIPTION	SHEET NO.

THE INFORMATION, INCLUDING ESTIMATED QUANTITIES OF WORK, SHOWN ON THESE SHEETS IS BASED ON LIMITED INVESTIGATIONS BY THE STATE AND IS IN NO WAY WARRANTED TO INDICATE THE CONDITIONS OF ACTUAL QUANTITIES OF WORK WHICH WILL BE REQUIRED.

Plotted Date: 12/10/2014

DESIGNER/DRAFTER: G.T.G/J.G
CHECKED BY: O.S.J
SCALE AS NOTED

STATE OF CONNECTICUT
DEPARTMENT OF TRANSPORTATION

Filename: ...\SB_MSH_117_157_XSEC.dgn

SIGNATURE/BLOCK:

PARSONS BRINCKERHOFF
500 WINDING BROOK DR.
GLASTONBURY, CT 06033

PROJECT TITLE:
REPLACEMENT OF ROUTE 7
OVER NORWALK RIVER
(BRIDGE NO. 02029)

TOWN: RIDGEFIELD

DRAWING TITLE:
SLAB DETAILS
SHEET 1 OF 2

PROJECT NO. 117-157
DRAWING NO. S-21
SHEET NO. 05.22

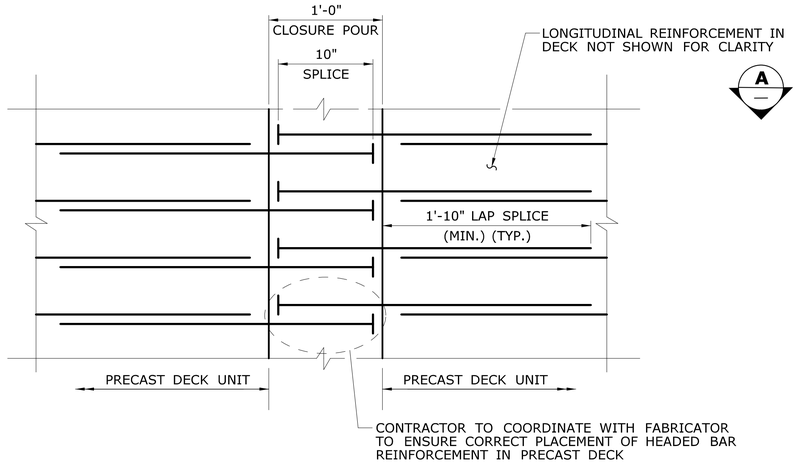

TOP MAT HEADED BAR REINFORCEMENT DETAIL PLAN

SCALE: $1\frac{1}{2}$" = 1'-0"

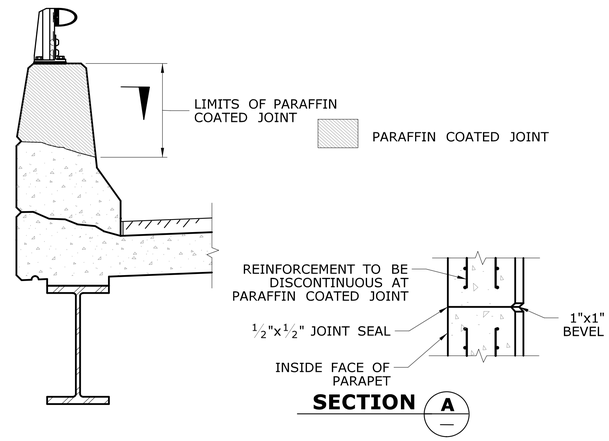

PARAFFIN COATED JOINT DETAILS

SCALE: $\frac{3}{4}$" = 1'-0"

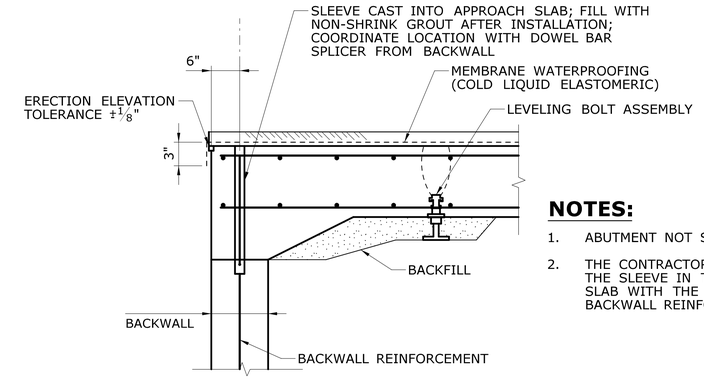

APPROACH SLAB AT ABUTMENT

SCALE: $\frac{3}{4}$" = 1'-0"

NOTES:

1. ABUTMENT NOT SHOWN FOR CLARITY.
2. THE CONTRACTOR SHALL VERIFY FIT OF THE SLEEVE IN THE PRECAST APPROACH SLAB WITH THE LOCATION OF BACKWALL REINFORCEMENT.

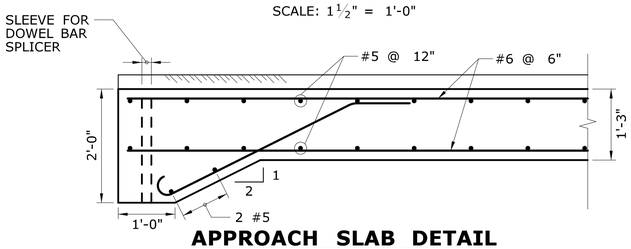

APPROACH SLAB DETAIL

SCALE: $\frac{3}{4}$" = 1'-0"

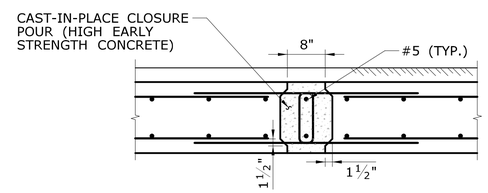

SECTION B

SCALE: $\frac{3}{4}$" = 1'-0" S-20

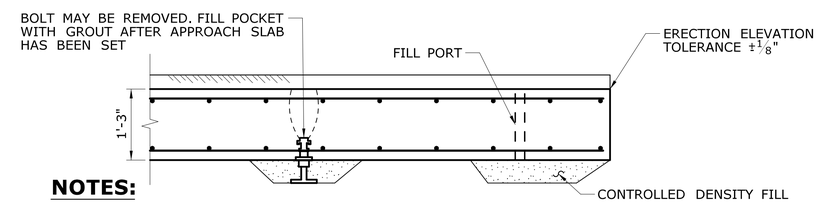

NOTES:

1. EXCAVATE TRENCH UNDER END OF APPROACH SLAB END PRIOR TO INSTALLATION.
2. SET APPROACH SLAB ON GRADE. ADJUST ELEVATIONS USING LEVELING DEVICE. SHIMS MAY BE USED IN LIEU OF LEVELING BOLTS.
3. FILL VOID UNDER SLAB END WITH CONTROLLED DENSITY FILL THROUGH EXCAVATION AND PORTS IN SLAB.
4. CONSTRUCT APPROACH ROADWAY AND OVERLAY.
5. ALL WORK SHOWN FOR PRECAST APPROACH SLAB IS INCLUDED IN ITEM "PRECAST APPROACH SLAB".

APPROACH SLAB AT END

SCALE: $\frac{3}{4}$" = 1'-0"

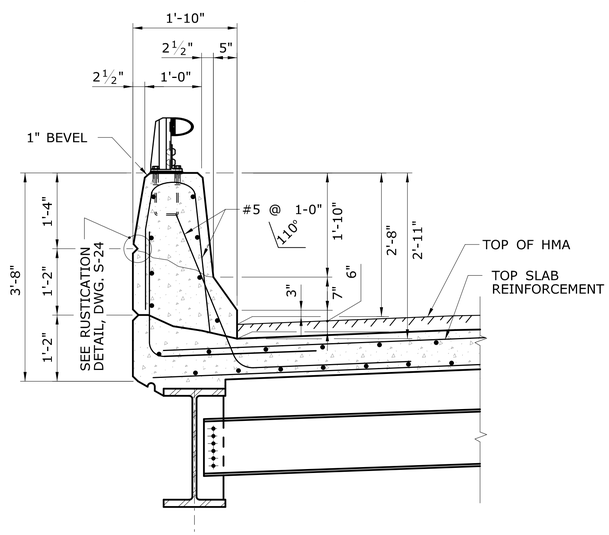

WEST FASCIA PARAPET SECTION

SCALE: $\frac{3}{4}$" = 1'-0"

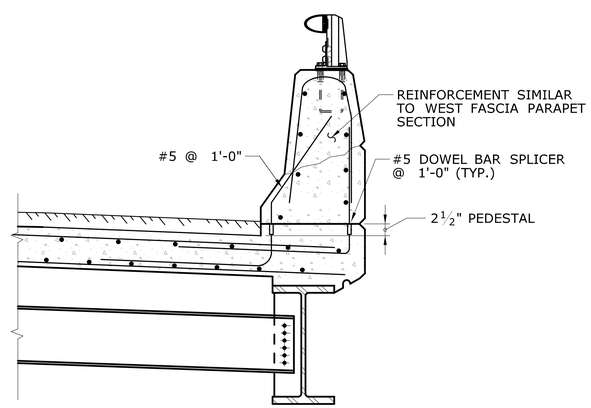

EAST FASCIA PARAPET SECTION

SCALE: $\frac{3}{4}$" = 1'-0"

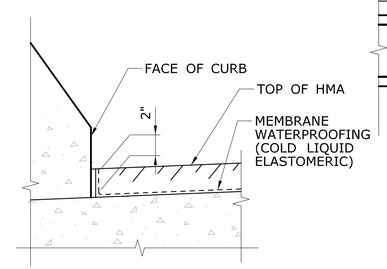

MEMBRANE WATERPROOFING AT GUTTERLINE

SCALE: $1\frac{1}{2}$" = 1' 0"

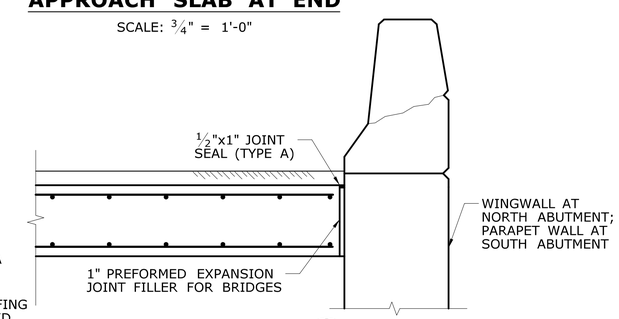

SECTION C

SCALE: $\frac{3}{4}$" = 1'-0" S-20

NOTES:

1. ALL REINFORCEMENT IN DECK SHALL BE EPOXY COATED.
2. FOR STEEL NOTES, SEE DWG. S-19.
3. FOR PROFILES, SEE DWG. S-03.
4. FOR ADDITIONAL SLAB DETAILS SEE DWGS. S-20 AND S-21.

REV.	DATE	REVISION DESCRIPTION	SHEET NO.

THE INFORMATION, INCLUDING ESTIMATED QUANTITIES OF WORK, SHOWN ON THESE SHEETS IS BASED ON LIMITED INVESTIGATIONS BY THE STATE AND IS IN NO WAY WARRANTED TO INDICATE THE CONDITIONS OF ACTUAL QUANTITIES OF WORK WHICH WILL BE REQUIRED.

Plotted Date: 12/10/2014

DESIGNER/DRAFTER: G.T.G/P.M.M.
CHECKED BY: O.S.J.
NOT TO SCALE

STATE OF CONNECTICUT
DEPARTMENT OF TRANSPORTATION

Filename: ...\SB_MSH_117_157_SLABDET.dgn

SIGNATURE/BLOCK: STATE OF CONNECTICUT LOUIS R. LAUBE No. 20880 LICENSED PROFESSIONAL ENGINEER

PARSONS BRINCKERHOFF
500 WINDING BROOK DR.
GLASTONBURY, CT 06033

PROJECT TITLE: REPLACEMENT OF ROUTE 7 OVER NORWALK RIVER (BRIDGE NO. 02029)

TOWN: RIDGEFIELD

DRAWING TITLE: SLAB DETAILS SHEET 2 OF 2

PROJECT NO. 117-157
DRAWING NO. S-22
SHEET NO. 05.23

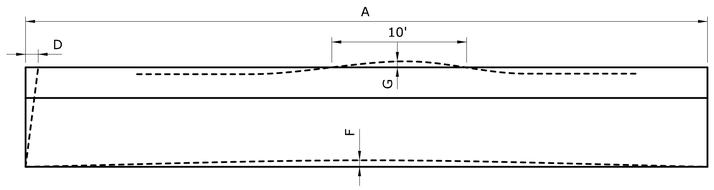

PLAN

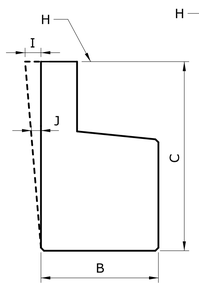

SECTION

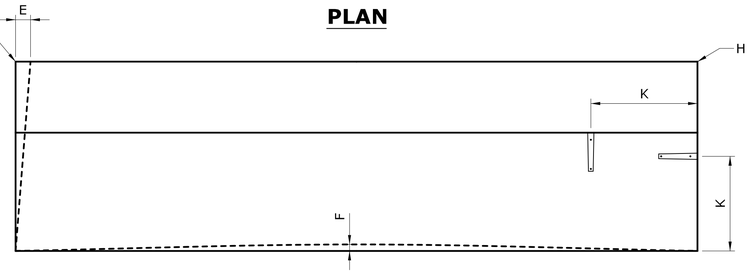

ELEVATION

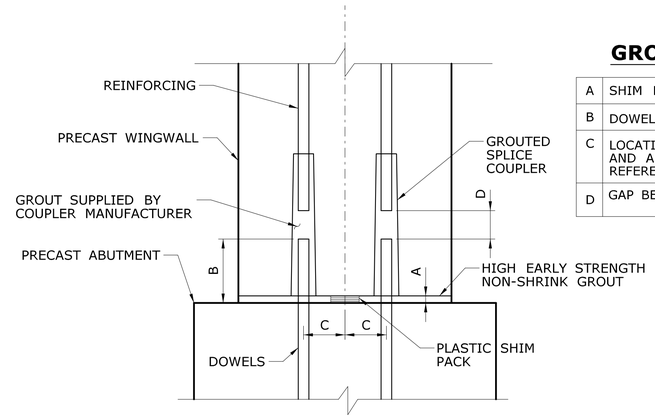

GROUTED SPLICE COUPLER DETAILS

GROUTED SPLICE COUPLER TOLERANCES

A	SHIM PACK HEIGHT	$1\frac{1}{2}$" ± $\frac{3}{8}$"
B	DOWEL HEIGHT	CONSULT MANUFACTURER
C	LOCATION OF REINFORCING, GROUTED SPLICE COUPLER, AND ABUTMENT DOWELS MEASURED FROM A COMMON REFERENCE POINT	±$\frac{1}{4}$"
D	GAP BETWEEN DOWELS AND REINFORCING	CONSULT MANUFACTURER

INTEGRAL ABUTMENT TOLERANCES

A	LENGTH	±$\frac{1}{4}$"
B	WIDTH (OVERALL)	±$\frac{1}{4}$"
C	DEPTH (OVERALL)	±$\frac{1}{4}$"
D	VARIATION FROM SPECIFIED PLAN END SQUARENESS OR SKEW	±$\frac{1}{4}$"
E	VARIATION FROM SPECIFIED ELEVATION END SQUARENESS OR SKEW	±$\frac{1}{4}$"
F	SWEEP OVER MEMBER LENGTH	±$\frac{1}{2}$"
G	LOCAL SMOOTHNESS OF ANY SURFACE	±$\frac{1}{4}$" IN 10 FEET

INTEGRAL ABUTMENT TOLERANCES

H	TOP ELEVATION FROM NOMINAL TOP ELEVATION	$\frac{1}{4}$"
I	MAXIMUM PLUMB VARIATION OVER HEIGHT OF PANEL	$\frac{1}{2}$"
J	PLUMB IN ANY 10 FEET OF PANEL HEIGHT	$\frac{1}{4}$"
K	HORIZONTAL LOCATION OF SPLICERS/COUPLERS MEASURED FROM A COMMON POINT	±$\frac{1}{4}$"

NOTES:

1. USE MATCHING TEMPLATES AND JIGS FOR THE LOCATION OF REINFORCEMENT AND GROUTED SPLICE COUPLER PLACEMENT WITHIN THE ELEMENTS TO CONTROL CRITICAL DIMENSION "C".
2. CONSULT MANUFACTURER OF THE GROUTED SPLICE COUPLER FOR PROPER DIMENSIONS "B" AND "D" AND FOR TOLERANCE ON THESE DIMENSIONS.
3. BEFORE EXECUTING GROUTED SPLICE COUPLER ASSEMBLIES, ALWAYS SEEK INSTALLATION RECOMMENDATIONS FROM THE MANUFACTURER OF THE GROUTED SPLICE COUPLER USED.

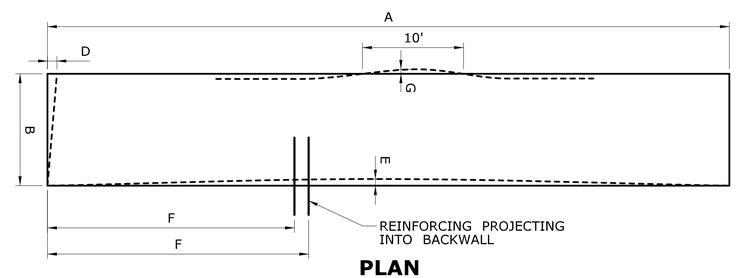

PLAN

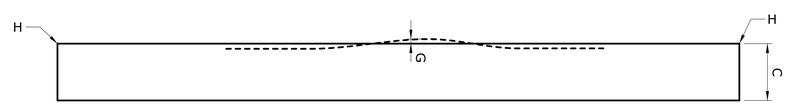

ELEVATION

APPROACH SLAB TOLERANCES

A	LENGTH	±$\frac{1}{4}$"
B	WIDTH (OVERALL)	±$\frac{1}{4}$"
C	DEPTH (OVERALL)	±$\frac{1}{4}$"
D	VARIATION FROM SPECIFIED PLAN END SQUARENESS OR SKEW	±$\frac{1}{2}$"
E	SWEEP OVER MEMBER LENGTH	±$\frac{1}{2}$"
F	LOCATION OF PROJECTING REINFORCING MEASURED FROM A COMMON REFERENCE POINT	±$\frac{1}{2}$"
G	LOCAL SMOOTHNESS OF ANY SURFACE	±$\frac{1}{8}$" IN 10 FEET
H	ERECTION ELEVATION TOLERANCE	±$\frac{1}{4}$"

REV.	DATE	REVISION DESCRIPTION	SHEET NO.

THE INFORMATION, INCLUDING ESTIMATED QUANTITIES OF WORK, SHOWN ON THESE SHEETS IS BASED ON LIMITED INVESTIGATIONS BY THE STATE AND IS IN NO WAY WARRANTED TO INDICATE THE CONDITIONS OF ACTUAL QUANTITIES OF WORK WHICH WILL BE REQUIRED.

Plotted Date: 12/10/2014

DESIGNER/DRAFTER: G.T.G
CHECKED BY: O.S.J.
NOT TO SCALE

STATE OF CONNECTICUT
DEPARTMENT OF TRANSPORTATION

Filename: ...\SB_MSH_117_157_TOLER.dgn

SIGNATURE/BLOCK:
STATE OF CONNECTICUT OSCAR S. JIMENEZ No. 20880 LICENSED PROFESSIONAL ENGINEER

PARSONS BRINCKERHOFF
500 WINDING BROOK DR.
GLASTONBURY, CT 06033

PROJECT TITLE:
REPLACEMENT OF ROUTE 7 OVER NORWALK RIVER (BRIDGE NO. 02029)

TOWN: RIDGEFIELD

DRAWING TITLE: PRECAST TOLERANCES

PROJECT NO. 117-157
DRAWING NO. S-23
SHEET NO. 05.24

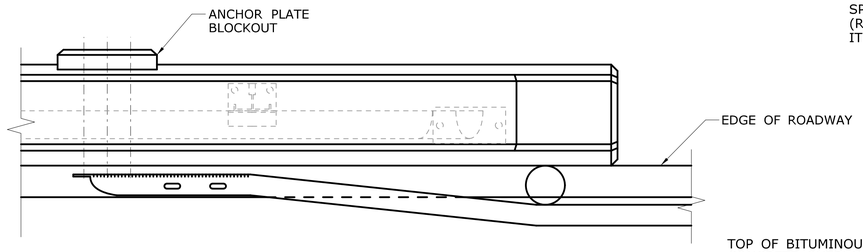

LEADING END R-B 350 RAIL ATTACHMENT PLAN

SCALE: 1" = 1'-0"

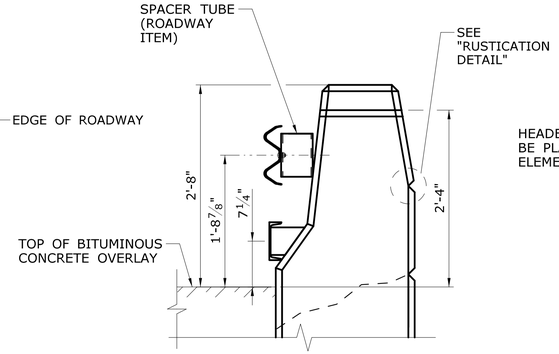

VIEW A

SCALE: 1" = 1'-0"

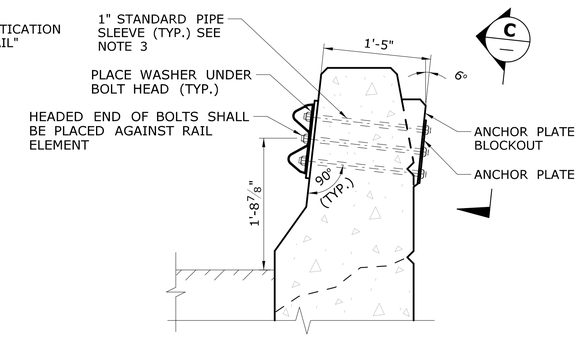

SECTION B

SCALE: 1" = 1'-0"

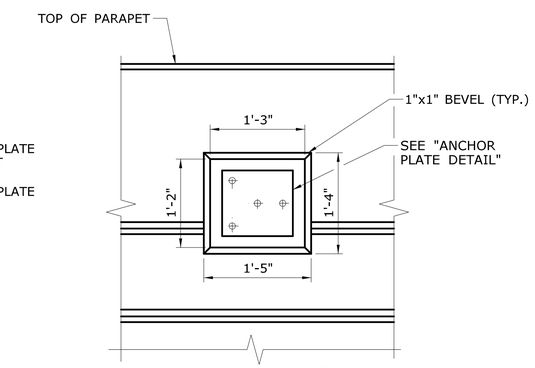

SECTION C

SCALE: 1" = 1'-0"

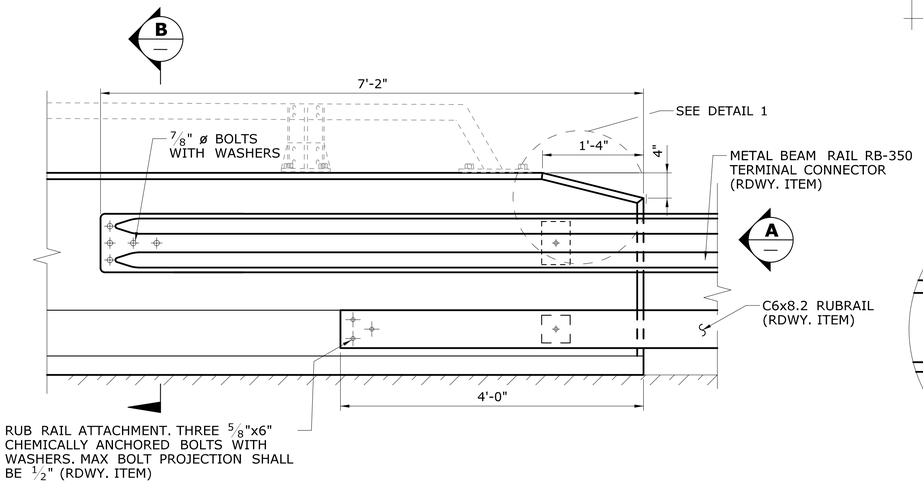

LEADING END R-B 350 RAIL ATTACHMENT ELEVATION

SCALE: 1" = 1'-0"

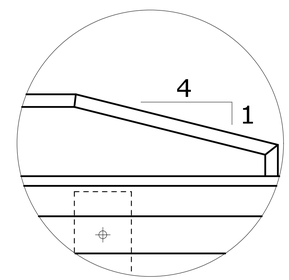

DETAIL 1

SCALE: 2" = 1'-0"

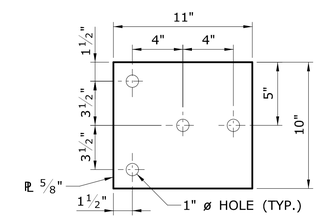

ANCHOR PLATE DETAIL

SCALE: 2" = 1'-0"

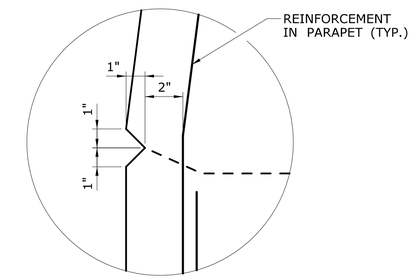

RUSTICATION DETAIL

SCALE: 3" = 1'-0"

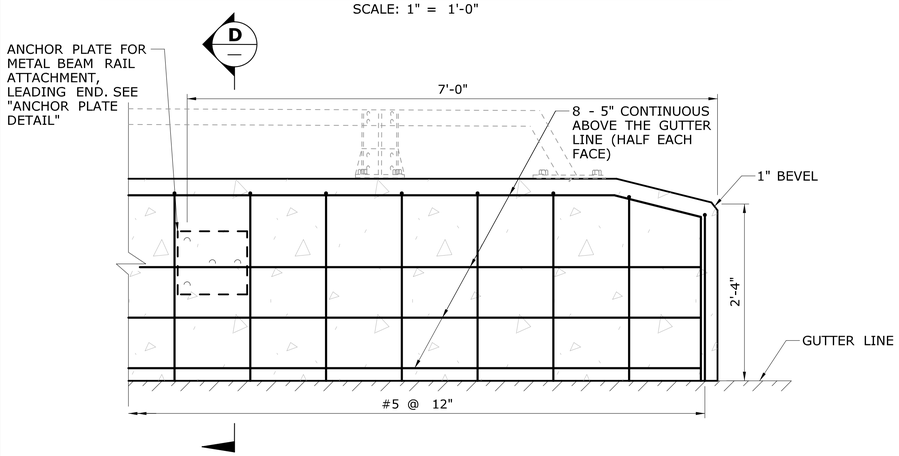

PARAPET REINFORCEMENT AT LEADING END

SCALE: 1" = 1'-0"

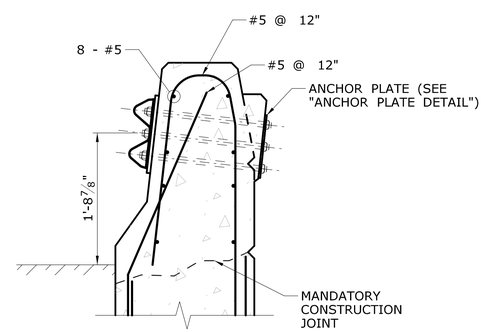

SECTION D

SCALE: 1" = 1'-0"

R-B 350 RAIL NOTES:

1. STEEL PLATES SHALL CONFORM TO THE REQUIREMENTS OF ASTM A36M. THE STEEL PLATES SHALL BE HOT DIP GALVANIZED IN ACCORDANCE WITH THE REQUIREMENTS OF ASTM A123.
2. ANCHOR BOLTS SHALL CONFORM TO THE REQUIREMENTS OF ASTM A325, MECHANICALLY GALVANIZED.
3. 1" DIAMETER PIPE SHALL CONFORM TO ASTM A53, GRADE B OR ASTM A501 AND SHALL BE GALVANIZED IN ACCORDANCE WITH THE REQUIREMENTS OF ASTM A123.
4. ROADWAY ELEMENTS SHALL BE PAID FOR UNDER THE APPLICABLE ROADWAY ITEMS.
5. ALL RAIL ANCHORAGE MATERIAL REQUIRED FOR END ATTACHMENTS SHALL BE PAID UNDER APPLICABLE ROADWAY ITEMS.

REV.	DATE	REVISION DESCRIPTION	SHEET NO.

THE INFORMATION, INCLUDING ESTIMATED QUANTITIES OF WORK, SHOWN ON THESE SHEETS IS BASED ON LIMITED INVESTIGATIONS BY THE STATE AND IS IN NO WAY WARRANTED TO INDICATE THE CONDITIONS OF ACTUAL QUANTITIES OF WORK WHICH WILL BE REQUIRED.

Plotted Date: 12/10/2014

DESIGNER/DRAFTER: G.T.G./J.G
CHECKED BY: O.S.J
0 6" 1' 2'
SCALE 1"=1'-0"

STATE OF CONNECTICUT
DEPARTMENT OF TRANSPORTATION

Filename: ...\SB_MSH_117_157_DETS1.dgn

SIGNATURE/BLOCK:
PARSONS BRINCKERHOFF
500 WINDING BROOK DR.
GLASTONBURY, CT 06033

PROJECT TITLE:
REPLACEMENT OF ROUTE 7 OVER NORWALK RIVER (BRIDGE NO. 02029)

TOWN: RIDGEFIELD

DRAWING TITLE: LEADING END PARAPET DETAIL

PROJECT NO. 117-157
DRAWING NO. S-24
SHEET NO. 05.25

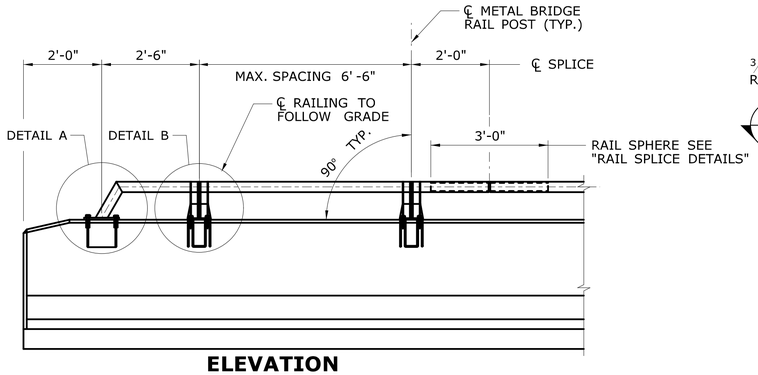

ELEVATION

SCALE: 1/2" = 1'-0"

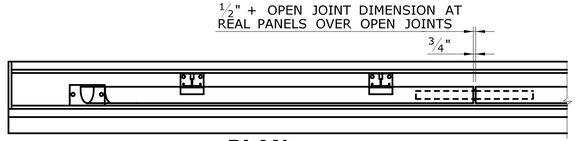

PLAN

SCALE: 3/4" = 1'-0"

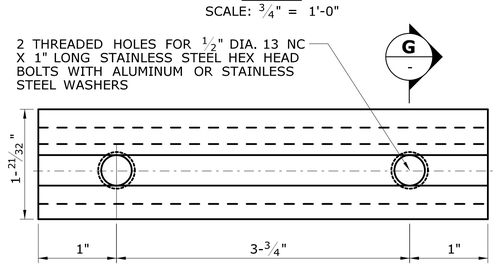

POST CONNECTION DEVICE DETAILS

N.T.S.

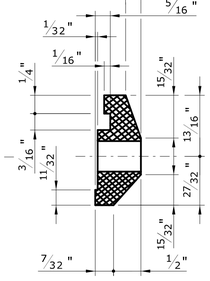

SECTION G

N.T.S.

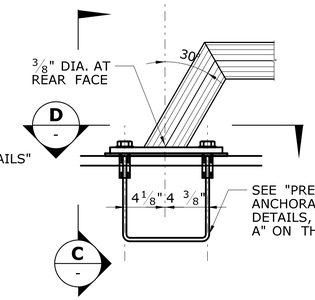

DETAIL-END RAIL A

SCALE: 1 1/2" = 1'-0"

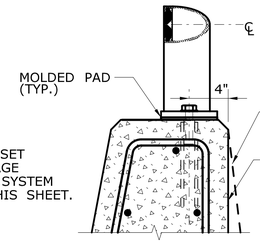

DETAIL-END RAIL C

SCALE: 1 1/2" = 1'-0"

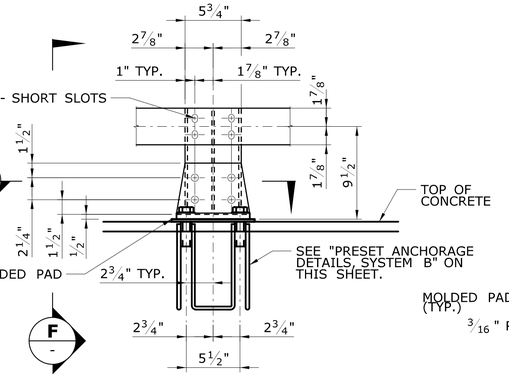

DETAIL-INTERIOR POST B

SCALE: 1 1/2" = 1'-0"

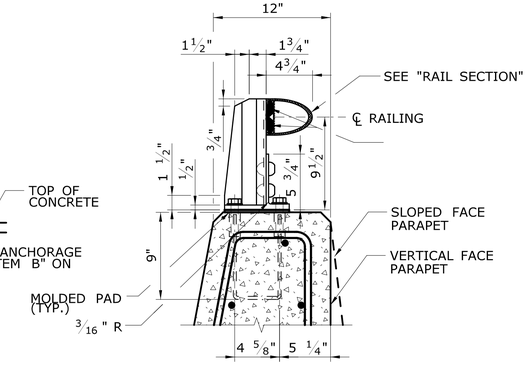

DETAIL-INTERIOR POST F

SCALE: 1 1/2" = 1'-0"

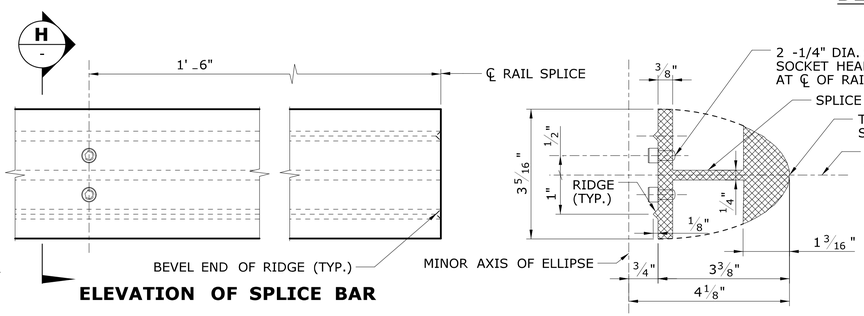

ELEVATION OF SPLICE BAR

SECTION H

RAIL SPLICE DETAILS

SCALE: 6" = 1'-0"

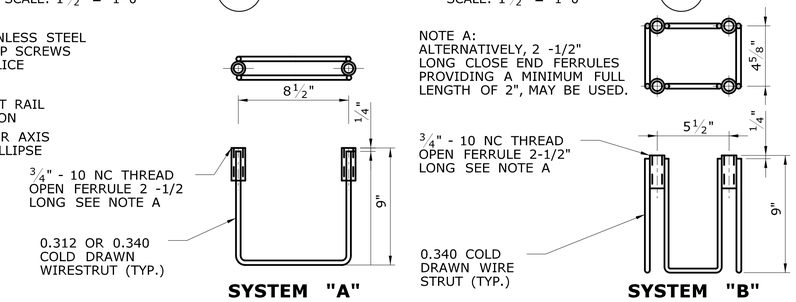

SYSTEM "A"

SYSTEM "B"

PRESET ANCHORAGE DETAILS

N.T.S.

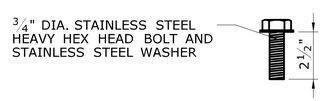

BOLT FOR PRESET ANCHORAGE

SCALE: 3" = 1'-0"

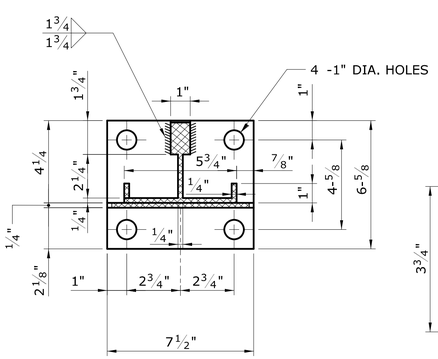

SECTION E

SCALE: 3" = 1'-0"

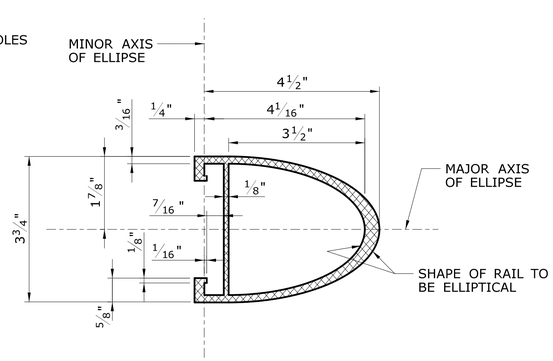

RAIL SECTION

SCALE: 6" = 1'-0"

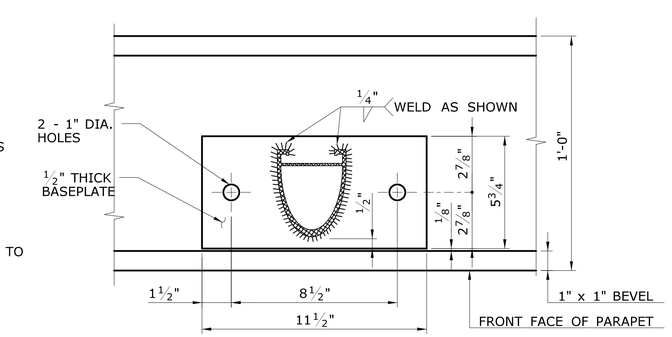

SECTION-END RAIL D

SCALE: 3" = 1'-0"

NOTES:

1. ALUMINUM WELDING SHALL BE IN ACCORDANCE WITH THE AMERICAN WELDING SOCIETY "STRUCTURAL WELDING CODE-ALUMINUM", ANSI/AWS D1.2.
2. RIVETING SHALL BE DONE IN ACCORDANCE WITH ARTICLE 6.5 - "RIVETING OF THE AASHTO SPECIFICATIONS FOR ALUMINUM STRUCTURES".
3. METAL BRIDGE RAIL: THE RAILING POSTS, POST CONNECTION DEVICES, SPLICE BARS AND RAILS SHALL BE EXTRUDED ALUMINUM AND CONFORM TO THE REQUIREMENTS OF ASTM B221, ALUMINUM ALLOY 6061-T6 OR 6005-T5.
4. SOCKET HEAD CAP SCREWS SHALL BE STAINLESS SHALL BE STAINLESS STEEL AND CONFORM TO THE REQUIREMENTS OF ASTM F837, GROUP 1 (ANSI TYPE 304).
5. ALL BOLTS SHALL BE STAINLESS STEEL AND CONFORMS TO THE REQUIREMENTS OF ASTM F593, GROUP 1, (ANSI TYPE 304). NUTS SHALL BE STAINLESS STEEL AND CONFORM TO THE REQUIREMENTS OF ASTM F594, GROUP 1. WASHERS SHALL BE STAINLESS AND CONFORM TO THE REQUIREMENTS OF ASTM A167, TYP302 THROUGH 305.
6. CONE POINT RIVETS SHALL CONFORM TO ASTM B316, ALUMINUM ALLOY 6061-T6 OR ASTM B221, ALUMINUM ALLOY 6061-T-6.
7. LENGTHS OF RAIL ELEMENTS SHALL BE CONTINUOUS OVER FOUR RAIL POSTS WHEREVER POSSIBLE BUT IN NO CASE LESS THAN TWO. WELDING OF TWO OR MORE RAILS TO FORM AN ELEMENT WILL NOT BE ALLOWED. RAIL SPLICES SHALL BE LOCATED IN RAIL PANELS OVER OPEN JOINTS IN PARAPETS. SPLICE BARS SHALL HAVE A SLIDING FIT IN THE RAIL SECTIONS.
8. ALUMINUM RAILINGS SHALL BE CAREFULLY ADJUSTED PRIOR TO FIXING IN PLACE TO INSURE PROPER MATCHING AT ABUTTING JOINTS AND CORRECT ALIGNMENT AND CURVATURE THROUGHOUT THEIR LENGTH. AFTER INSTALLATION, ALL RAILS AND POSTS SHALL BE FREE OF BURRS, SHARP EDGES AND IRREGULARITIES.
9. PRESET AHCHORAGES: THE WIRE STRUTS SHALL BE COLD-DRAWN AND CONFORM TO ASTM A510, GRADE 1030. THE FERRULES SHALL CONFORM TO ASTM 108, GRADE 12L14. AFTER FABRICATION, THE PRESET ANCHORAGES SHALL BE HOT-DIP GALVANIZED IN ACCORDANCE WITH ASTM A153. THE BOLTS SHALL BE "FREE RUNNING" IN THE FERRULES AFTER GALVANIZATIION.
10. THE ANCHORAGE ASSEMBLIES SHALL BE INSTALLED PERPENDICULAR TO THE GRADE OF THE BRIDGE DECK. THE ANCHORAGES SHALL BE FIRMLY AND ACCURATELY HELD IN POSITION PRIOR TO AND DURING THE PLACING OF CONCRETE.
11. MOLDED PADS: MOLDED PADS SHALL BE MANUFACTURED FROM NEW UNVULCANIZED ELASTOMER AND UNUSED SYNTHETIC FIBERS, WITH A WEIGHT PROPORTION OF FIBER CONTENT EQUAL TO APPROXIMATELY ONE-HALF OF THE TOTAL WEIGHT OF THE PAD.
12. ANODIZING: METAL BRIDGE RAIL SHALL NOT BE ANODIZED.

REV.	DATE	REVISION DESCRIPTION	SHEET NO.

THE INFORMATION, INCLUDING ESTIMATED QUANTITIES OF WORK, SHOWN ON THESE SHEETS IS BASED ON LIMITED INVESTIGATIONS BY THE STATE AND IS IN NO WAY WARRANTED TO INDICATE THE CONDITIONS OF ACTUAL QUANTITIES OF WORK WHICH WILL BE REQUIRED.

Plotted Date: 12/10/2014

DESIGNER/DRAFTER: G.T.G/J.G.
CHECKED BY: O.S.J
0 3" 6" 1'
SCALE 1 1/2"=1'-0"

STATE OF CONNECTICUT
DEPARTMENT OF TRANSPORTATION

Filename: ...\SB_MSH_117_157_BR-Rail.dgn

SIGNATURE/BLOCK:
STATE OF CONNECTICUT
JOHN P. LAWLESS
No. 20890
LICENSED
PROFESSIONAL ENGINEER

PARSONS BRINCKERHOFF
500 WINDING BROOK DR.
GLASTONBURY, CT 06033

PROJECT TITLE:
REPLACEMENT OF ROUTE 7 OVER NORWALK RIVER (BRIDGE NO. 02029)

TOWN: RIDGEFIELD

DRAWING TITLE: BRIDGE RAIL HANDRAIL DETAILS

PROJECT NO. 117-157
DRAWING NO. S-25
SHEET NO. 05.26

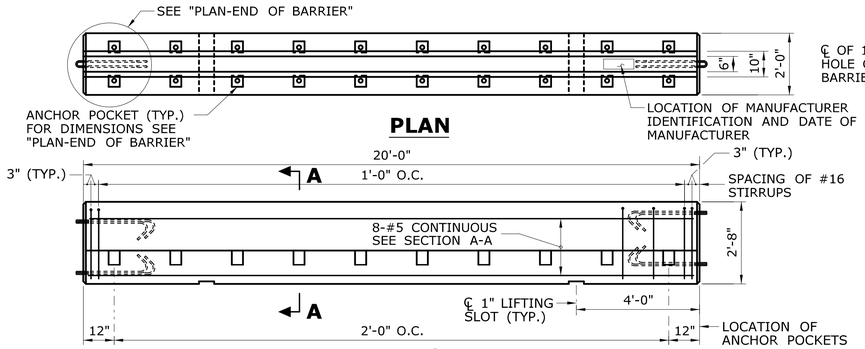

ELEVATION
PRECAST BARRIER UNIT (STRUCTURE)
NOT TO SCALE

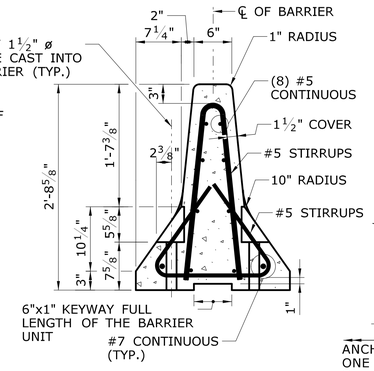

SECTION A-A
NOT TO SCALE

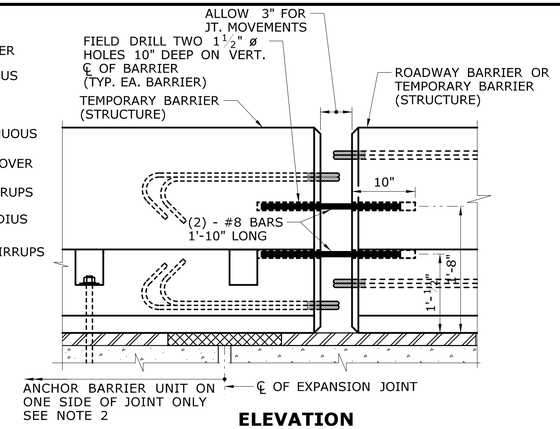

ELEVATION
BARRIER CONNECTION DETAILS AT EXPANSION JOINTS (CASE II SHOWN)
NOT TO SCALE

NOTES:

1. THE TEMPORARY BARRIER SHOWN ON THIS SHEET SHALL BE ANCHORED ONTO BRIDGE DECKS (SEE "TEMPORARY ANCHORAGE SYSTEM") WHEN IT IS USED TO PROTECT A VERTICAL DROP-OFF. THE TEMPORARY ANCHORAGE SYSTEM SHALL CONFORM TO THE FOLLOWING:

   A. PRESTRESSED DECK UNITS: THREADED INSERTS SHALL BE USED FOR SECURING TEMPORARY BARRIER (STRUCTURE) TO PRESTRESSED DECK UNITS. THE THREADED INSERTS SHALL BE CAST INTO THE DECK UNITS DURING FABRICATION AND SHALL BE LOCATED AS REQUIRED TO ACCOMMODATE THE STAGE CONSTRUCTION. SEE SPECIAL PROVISION FOR ADDITIONAL INFORMATION.

   B. CHEMICAL ANCHORING: THIS CONSISTS OF DRILLING HOLES IN NEW OR EXISTING CONCRETE, PLACING THREADED ANCHORS IN THE HOLES, AND SECURING THE ANCHORS WITH A PRE-APPROVED CHEMICAL ANCHOR MATERIAL WHICH CONFORMS TO M.03.01-15 OF THE STANDARD SPECIFICATIONS. HOLE DIAMETER SHALL BE DETERMINED BY THE MANUFACTURER OF THE CHEMICAL ANCHORING MATERIAL.

   C. THROUGH-BOLTING: THIS CONSISTS OF DRILLING THROUGH THE DECK SLABS AND SECURING REMOVABLE ANCHORS ON THE UNDERSIDE WITH PLATE WASHERS AND NUTS. THROUGH-BOLTING IS NOT PERMITTED ON NEW CONSTRUCTION OR PRESTRESSED CONCRETE. MAXIMUM HOLE SIZE IN SLAB = 40mm".

2. NUMBER OF ANCHORS: ON THE TRAFFIC SIDE OF A TYPICAL BARRIER, ANCHORS SHALL BE INSTALLED IN ALL POCKETS. AT BARRIER UNITS WHICH STRADDLE BRIDGE EXPANSION JOINTS THE ANCHOR AND CONNECTION DETAILS SHALL CONFORM TO TABLE "A".

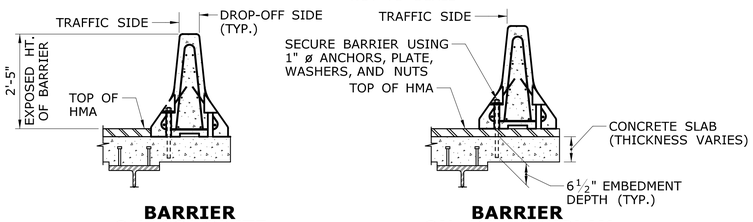

BARRIER ON CONCRETE — **BARRIER ON BIT. OVERLAY**

CHEMICAL ANCHORING OPTION
(SEE NOTE 1B)

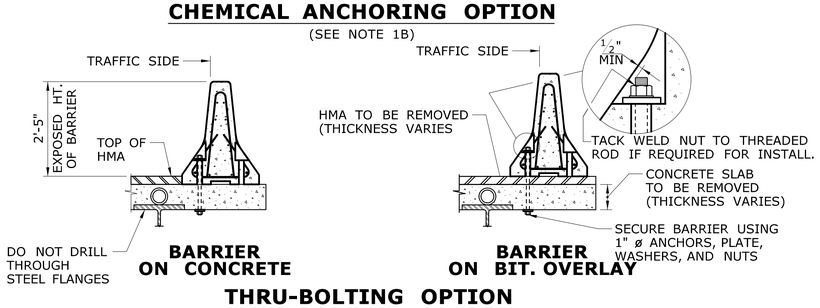

BARRIER ON CONCRETE — **BARRIER ON BIT. OVERLAY**

THRU-BOLTING OPTION
(SEE NOTE 1C)

TEMPORARY ANCHORAGE SYSTEM
NOT TO SCALE

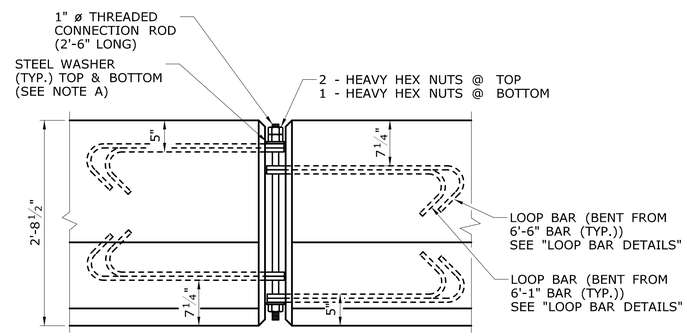

ELEVATION
BARRIER CONNECTION DETAILS
NOT TO SCALE

TABLE "A": BARRIER UNITS AT EXP. JOINTS			
CASE	SPAN LENGTH CONTRIBUTING TO MOVEMENT AT THE EXPANSION JOINT.	METHOD OF END CONNECTION TO ABUTTING BARRIER UNIT. (WHERE MOVEMENT WILL OCCUR)	ANCHOR REQUIREMENTS FOR THE BARRIER UNIT WHICH STRADDLES THE BRIDGE JOINT
I.	UP TO 100'	USE 25mm CONNECTION ROD BUT DO NOT OVER TIGHTEN THE NUTS TO ALLOW ROOM FOR EXPANSION AROUND THE ROD AND LOOPS	ON ONE SIDE OF THE JOINT ONLY, INSTALL AS MANY ANCHORS AS POSSIBLE ON THE TRAFFIC SIDE OF THE BARRIER, ON THE OTHER SIDE OF THE JOINT DO NOT INSTALL ANCHORS.
II.	100' TO 433'	FIELD DRILL HOLES IN ENDS OF BOTH UNITS AND CONNECT WITH 2-#8 BARS. FOR DETAILS SEE "BARRIER CONNECTION DETAILS"	ON ONE SIDE OF THE JOINT ONLY, INSTALL A TOTAL OF 10 ANCHORS. FILL THE POCKETS ON THE TRAFFIC SIDE BEFORE FILLING THE POCKETS ON THE DROP-OFF SIDE. IF THIS CANNOT BE ACHIEVED SEE III BELOW.
III.	OVER 433'	TO BE DESIGNED BY CONTRACTOR AND REVIEWED BY ENGINEER. COST OF DESIGNING AND FURNISHING SPECIAL BARRIER UNITS OR ATTACHMENTS PAID FOR UNDER "TPCBC (STRUCTURE)	TO BE DESIGNED BY CONTRACTOR AND REVIEWED BY ENGINEER. COST OF DESIGNING AND FURNISHING SPECIAL BARRIER UNITS OR ATTACHMENTS PAID FOR UNDER "TPCBC (STRUCTURE)".

3. THE WORK DONE ON THIS SHEET, WITH THE EXCEPTION OF THE DELINEATORS, SHALL BE PAID FOR UNDER THE ITEM "TEMPORARY PRECAST CONCRETE BARRIER CURB (STRUCTURE)".

4. DELINEATORS FOR THE TEMPORARY PRECAST BARRIER CURB SHALL CONFORM TO THE REQUIREMENTS SHOWN ON DOT STANDARD SHEET 1205A " TYPICAL DELINEATION, DELINEATOR AND OBJECT MARKER DETAILS".

NOTES:

1. FOR ANCHORING INTO DECK UNITS SEE NOTE 1A.
2. EXISTING REINFORCING BARS IN SLAB NOT DRAWN FOR CLARITY. AVOID DAMAGING THE REINFORCING IN ALL NEWLY CONSTRUCTED SLABS.

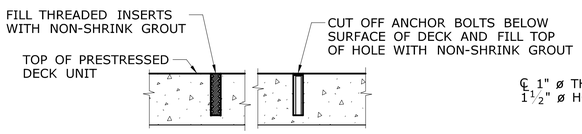

FILLING OF ANCHOR HOLES
NOT TO SCALE

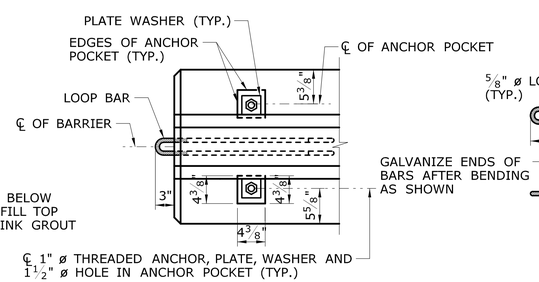

PLAN

END OF BARRIER
NOT TO SCALE

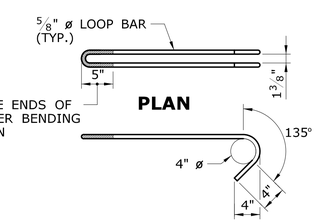

PLAN

ELEVATION

LOOP BAR DETAILS
NOT TO SCALE

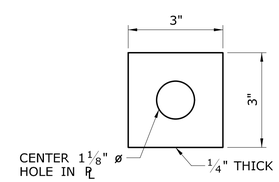

PLATE WASHER
NOT TO SCALE

NOTES FOR CONNECTION ROD DETAILS
(SEE "ELEVATION-BARRIER CONNECTION DETAILS")

A. PLAIN CIRCULAR STEEL WASHERS SHALL BE MANUFACTURED WITH THE FOLLOWING DIMENSIONS:

   OUTSIDE DIAMETER = 2⅞" (+¼, -0")
   INSIDE DIAMETER = 1⅛" (:1/16")
   THICKNESS = 3/16"

B. THE NUTS ON THE CONNECTION ROD SHALL BE TURNED UNTIL THE BOTTOM WASHER IS DRAWN UP AGAINST THE LOOP BAR. THE LOOP BARS SHALL NOT BE BENT DUE TO THE TIGHTENING PROCESS.

C. FOR EASE OF REMOVAL THE THREADS ON THE CONNECTION RODS AND NUTS SHALL BE WAXED.

REV.	DATE	REVISION DESCRIPTION	SHEET NO.

THE INFORMATION, INCLUDING ESTIMATED QUANTITIES OF WORK, SHOWN ON THESE SHEETS IS BASED ON LIMITED INVESTIGATIONS BY THE STATE AND IS IN NO WAY WARRANTED TO INDICATE THE CONDITIONS OF ACTUAL QUANTITIES OF WORK WHICH WILL BE REQUIRED.

Plotted Date: 12/10/2014

DESIGNER/DRAFTER: G.T.G/J.C.G
CHECKED BY: O.S.J
NOT TO SCALE

STATE OF CONNECTICUT
DEPARTMENT OF TRANSPORTATION

Filename: ...\SB_MSH_117_157_TPCBC.dgn

SIGNATURE/BLOCK:
STATE OF CONNECTICUT — HOWARD R. LAMBERT — No. 20890 — LICENSED PROFESSIONAL ENGINEER

PARSONS BRINCKERHOFF
500 WINDING BROOK DR.
GLASTONBURY, CT 06033

PROJECT TITLE:
REPLACEMENT OF ROUTE 7 OVER NORWALK RIVER (BRIDGE NO. 02029)

TOWN: RIDGEFIELD

DRAWING TITLE: TEMPORARY PRECAST BARRIER CURB DETAILS

PROJECT NO. 117-157
DRAWING NO. S-26
SHEET NO. 05.27