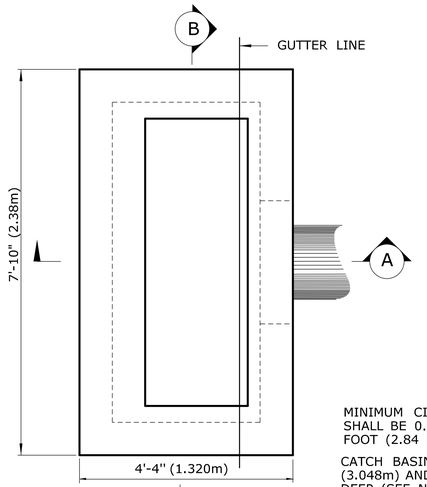

PLAN

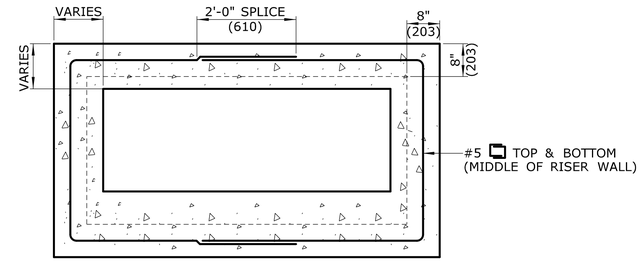

REDUCER SECTION (TYP.)

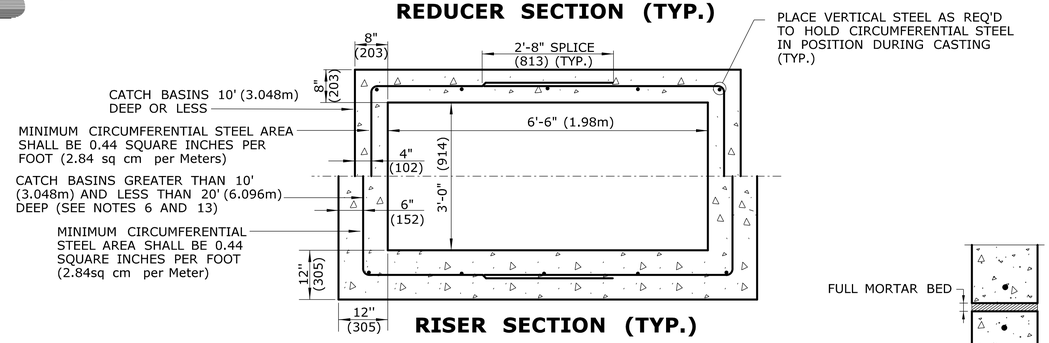

RISER SECTION (TYP.)

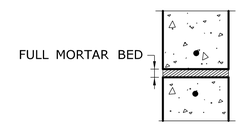

MORTAR JOINT DETAIL

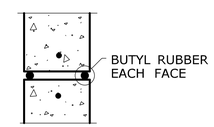

BUTYL RUBBER JOINT DETAIL

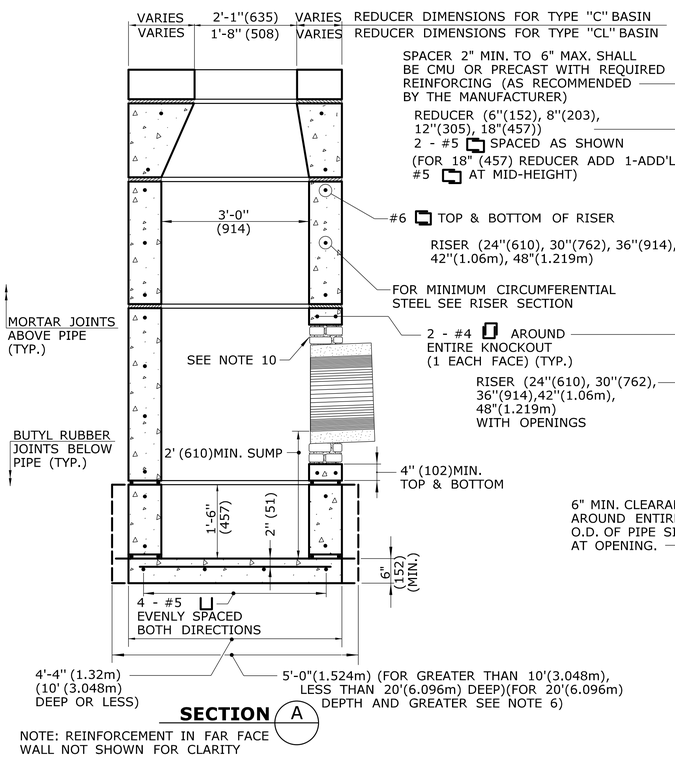

SECTION A

NOTE: REINFORCEMENT IN FAR FACE
WALL NOT SHOWN FOR CLARITY

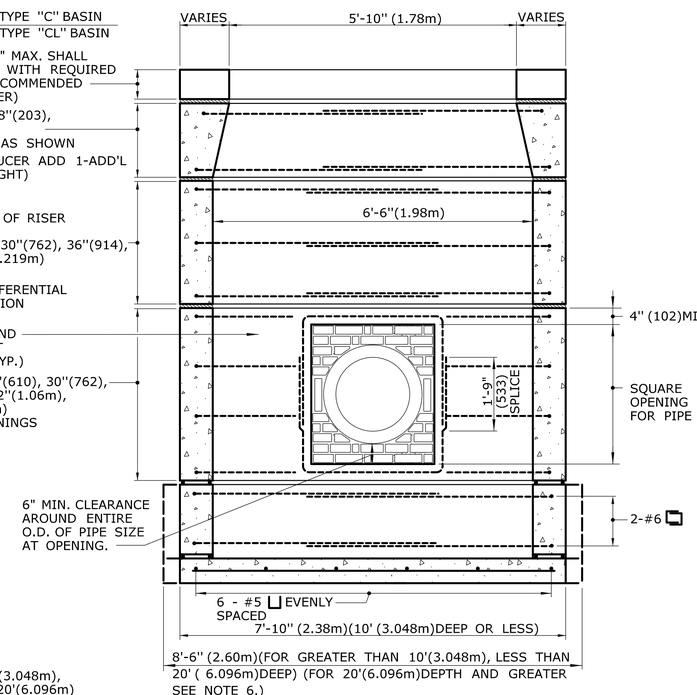

SECTION B

PRECAST CONCRETE TYPE "C" & "C-L" DOUBLE GRATE TYPE II CATCH BASIN

(UNDER 10' (3.048m) DEEP SHOWN)

GENERAL NOTES:

1. REINFORCEMENT SHALL CONFORM TO ASTM A615, GRADE 60.
2. DETAILS ON THIS SHEET SHOW STANDARD REINFORCEMENT. WELDED WIRE FABRIC WITH AN AREA EQUAL TO OR GREATER THAN THE REINFORCING SHOWN MAY BE SUBSTITUTED.
3. ALL LAP SPLICES, DEVELOPMENT LENGTHS, BENDS FOR REINFORCEMENT, AND WELDED WIRE FABRIC SHALL CONFORM TO AASHTO STANDARD SPECIFICATIONS FOR HIGHWAY BRIDGES.
4. ALL REINFORCEMENT SHALL HAVE A MINIMUM CLEAR COVER OF 2"(51), EXCEPT FOR BENEATH BOTTOM REINFORCEMENT IN TOP SLABS, WHERE THE MINIMUM MAY BE $1\frac{1}{2}$"(38).
5. MINIMUM CONCRETE COMPRESSIVE STRENGTH Fc' = 4000 PSI (27.580 kPa) SHALL BE OBTAINED PRIOR TO SHIPPING.
6. BASES AND RISERS AT A DEPTH OF 20' (6.096m) AND GREATER SHALL BE DESIGNED BY THE CONTRACTOR AND WORKING DRAWINGS SHALL BE SUBMITTED TO THE ENGINEER FOR REVIEW.
7. SEE STANDARD SHEET HW-507_08 FOR CATCH BASIN FRAMES AND GRATES.
8. FOR DOT MAINTENANCE PERSONNEL, RISERS MAY BE PREFABRICATED WITH PIPE OPENINGS IN ALL FOUR WALLS. ADEQUATE REINFORCING AROUND PIPE OPENINGS CONFORMING TO THESE PLANS SHALL BE PROVIDED. ANY RISERS USED WHERE A PIPE OPENING IS TO REMAIN IN PLACE, MUST BE FORMED UP WITH BRICK AS DIRECTED BY THE ENGINEER.
9. RISERS SHALL NEVER HAVE CORNER PIPE ENTRIES. WHERE THE ALIGNMENT OF THE PIPE WITH RESPECT TO THE CORNER OF THE CATCH BASIN CANNOT BE CHANGED, A ROUND STRUCTURE CONFORMING TO ASTM C478 SHALL BE USED. REINFORCING FOR THE ROUND TOP SLAB WITH A RECTANGULAR OPENING SHALL CONFORM TO DETAILS SHOWN HERE.
10. ALL PIPE OPENINGS SHALL BE CLOSED USING MATERIALS WHICH CONFORM TO STATE OF CONNECTICUT STANDARD SPECIFICATIONS SECTION M.08.02. IF THE ENGINEER DETERMINES THAT THE CLOSURE OF ANY PIPE OPENING IS UNSATISFACTORY, THE CONTRACTOR SHALL RECLOSE SAID OPENING AT NO ADDITIONAL COST TO THE STATE. OPENINGS FOR PIPE SHALL NOT RESULT IN A REDUCED WALL THICKNESS.
11. THE LATEST STATE OF CONNECTICUT STANDARD SPECIFICATIONS AND SUPPLEMENTALS SHALL GOVERN.
12. FOR ADDITIONAL DETAILS, SEE OTHER CATCH BASIN SHEETS.
13. WALL THICKNESS OF ALL CB'S OVER 10' (3.048m) DEEP SHALL BE INCREASED TO 12" (305) THICK. INSIDE DIMENSION SHALL REMAIN THE SAME. (THE 12" (305) THICKNESS WILL START AFTER THE FIRST 10' (3.048m).)
14. BUTYL RUBBER JOINT SEAL SHALL CONFORM TO AASHTO M-198 AND MORTAR SHALL CONFORM TO THE LATEST STATE OF CONNECTICUT STANDARD SPECIFICATIONS MATERIAL SECTION M11.04.

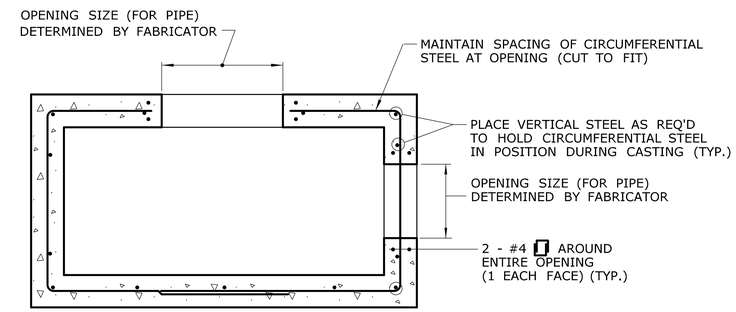

TYPICAL SECTION THRU SINGLE RISER WITH OPENINGS

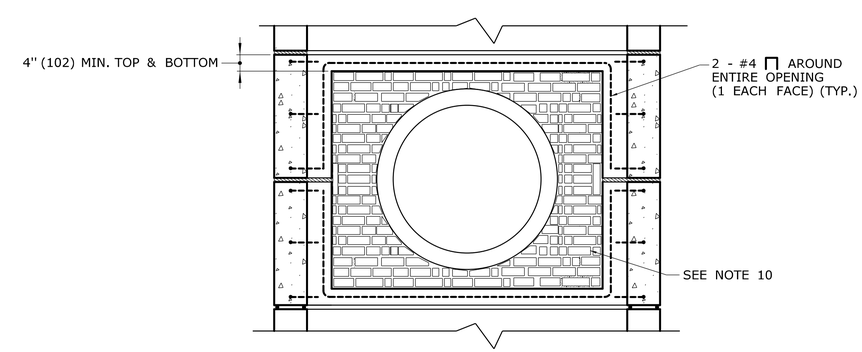

DOUBLE RISER OPENING (TYP.)
PIPES GREATER THAN 24" (610) O.D.

ALL METRIC DIMENSIONS ARE IN MILLIMETERS (mm) UNLESS OTHERWISE NOTED

REV.	DATE	REVISION DESCRIPTION
-	-	-
-	-	-
-	-	-
-	-	-
2	10/24/11	CHANGE WORD KNOCKOUT TO OPENING & ADD SPACER NOTE
1	6/01/10	CHANGE NOTE 7 TO REFERENCE HW-507_08

THE INFORMATION, INCLUDING ESTIMATED QUANTITIES OF WORK, SHOWN ON THESE SHEETS IS BASED ON LIMITED INVESTIGATIONS BY THE STATE AND IS IN NO WAY WARRANTED TO INDICATE THE CONDITIONS OF ACTUAL QUANTITIES OF WORK WHICH WILL BE REQUIRED.

Plotted Date: 10/22/2011

NOT TO SCALE

STATE OF CONNECTICUT
DEPARTMENT OF TRANSPORTATION

Filename: working_revisions.dgn Model: 11-HW-507_06

SUBMITTED BY: NAME/DATE/TIME: Leo Fontaine 2011.11.03 11:46:39 -04'00'

APPROVED BY: NAME/DATE/TIME: James H. Norman 2011.11.10 07:59:36 -05'00'

CTDOT STANDARD SHEET

OFFICE OF ENGINEERING

STANDARD SHEET TITLE: TYPE "C" & "C-L" PRECAST CONCRETE CB DOUBLE GRATE TYPE-II

STANDARD SHEET NO.: HW-507_06