NOTE:

1. ALL CONSTRUCTION DIMENSIONS ARE NOMINAL.

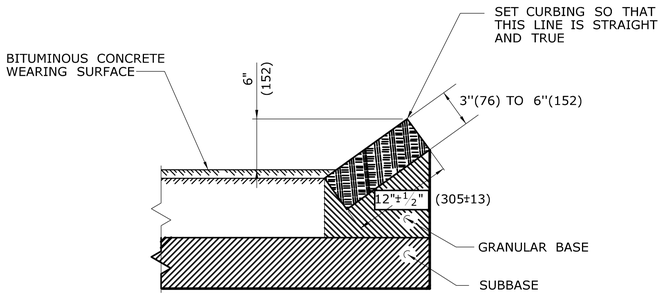

TYPICAL SECTION SHOWING SLOPE CURBING SET ADJACENT TO BITUMINOUS CONCRETE SURFACES

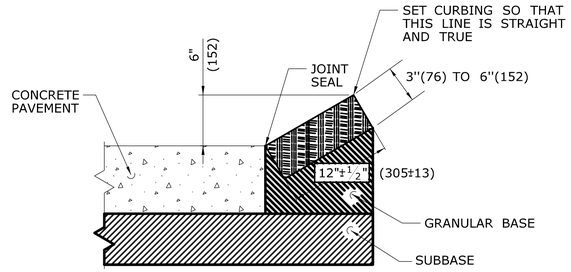

TYPICAL SECTION SHOWING SLOPE CURBING SET ADJACENT TO CONCRETE SURFACES

GRANITE SLOPE CURBING

½"(13) MORTAR JOINT REQUIRED

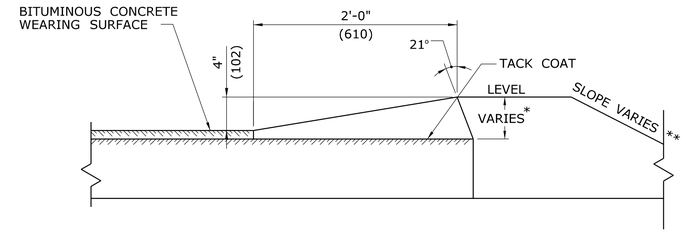

* THIS DIMENSION VARIES WITH THE THICKNESS OF THE TOP COURSE AND SLOPE OF SHOULDER.

** SEE TYPICAL SECTIONS FOR PROJECT. IN FILL AREAS 2'(610) LEVEL BEHIND THE CURB IS REQUIRED.

BITUMINOUS CONCRETE BERM

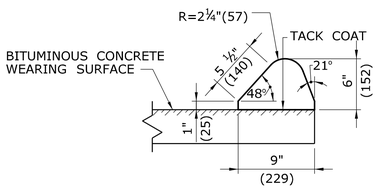

6"(150) BITUMINOUS CONCRETE LIP CURBING

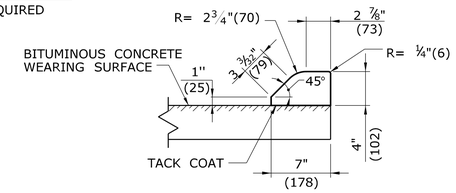

4"(100) BITUMINOUS CONCRETE PARK CURBING

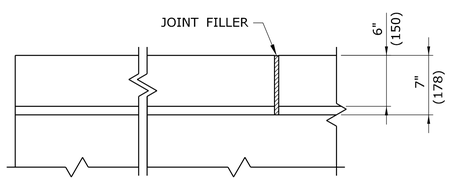

PLAN

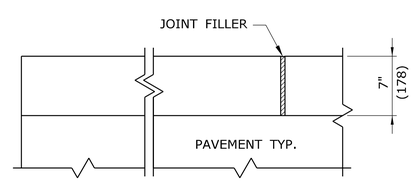

PLAN

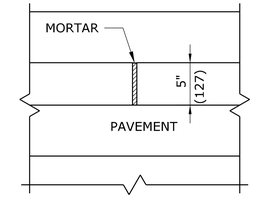

PLAN

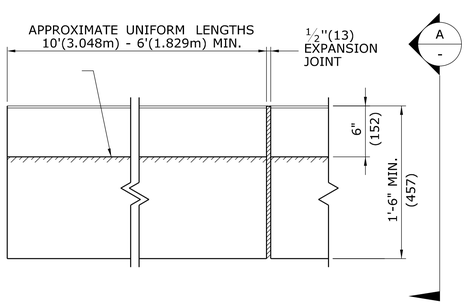

ELEVATION

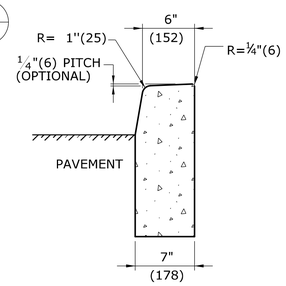

SECTION A -

6" (150) CONCRETE CURBING

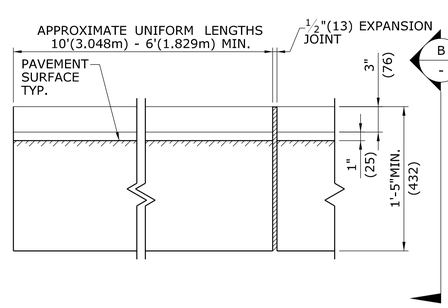

ELEVATION

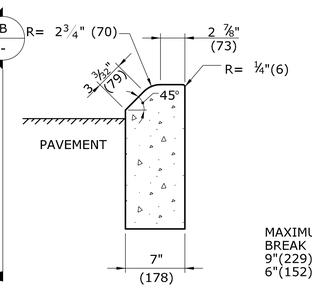

SECTION B -

4"(100) CONCRETE PARK CURBING

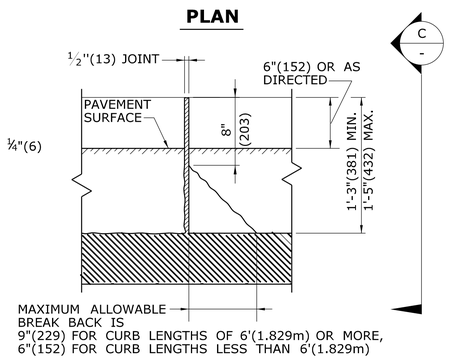

ELEVATION

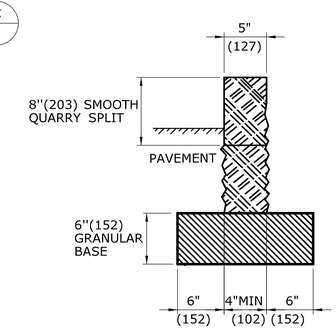

SECTION C -

STONE CURBING

ALL METRIC DIMENSIONS ARE IN MILLIMETERS (mm) UNLESS OTHERWISE NOTED

REV.	DATE	REVISION DESCRIPTION
-	-	-
-	-	-
-	-	-
-	-	-
-	-	-
1	6/01/10	REVISED TITLE FOR 6" CONC. CURB

THE INFORMATION, INCLUDING ESTIMATED QUANTITIES OF WORK, SHOWN ON THESE SHEETS IS BASED ON LIMITED INVESTIGATIONS BY THE STATE AND IS IN NO WAY WARRANTED TO INDICATE THE CONDITIONS OF ACTUAL QUANTITIES OF WORK WHICH WILL BE REQUIRED.

Plotted Date: 6/23/2011

NOT TO SCALE

STATE OF CONNECTICUT
DEPARTMENT OF TRANSPORTATION

Filename: CTDOT_HIGHWAY_STD_JUNE2011.dgn Model: 22 - HW-811_01

SUBMITTED BY: NAME/DATE/TIME: Digitally signed by Leo L. Fontaine DN: cn=Leo L. Fontaine, o=Parsons Brinckerhoff, ou=Transportation Principal Engineer Soils and Foundations, ou=Bureau of Engineering and Construction, ou=Department of Transportation, email=Leo.Fontaine@dot.gov, c=State of Connecticut, c=US Leo L. Fontaine Date: 2012.07.11 15:31:17 -04'00'

APPROVED BY: NAME/DATE/TIME: James H. Norman 2012.07.12 09:40:09 -04'00'

CTDOT STANDARD SHEET

OFFICE OF ENGINEERING

STANDARD SHEET TITLE: CURBING

STANDARD SHEET NO.: HW-811_01