NEW HAVEN RAIL YARD FACILITIES IMPROVEMENTS

NEW HAVEN RAIL YARD
New Haven, CT

MAINTENANCE OF WAY BUILDING

SPECIFICATIONS

(VOLUME 3 OF 3)

April 2015

STATE PROJECT NO. 0301-0124

Prepared For:

Connecticut Department of Transportation
2800 Berlin Turnpike
Newington, Connecticut 06131-7546

Submitted by:

Parsons Brinckerhoff
500 Winding Brook Drive
Glastonbury, Connecticut 06033

SECTION 00 01 01 - PROJECT TITLE PAGE

NEW HAVEN RAIL YARD FACILITIES IMPROVEMENTS

NEW HAVEN RAIL YARD
New Haven, CT

MAINTENANCE OF WAY BUILDING

SPECIFICATIONS

April 2015

STATE PROJECT NO. 0301-0124

Prepared For:

Connecticut Department of Transportation
2800 Berlin Turnpike
Newington, Connecticut 06131-7546

Submitted by:

Parsons Brinckerhoff
500 Winding Brook Drive
Glastonbury, Connecticut 06033

END OF PROJECT TITLE PAGE

SECTION 00 01 11 - TABLE OF CONTENTS

VOLUME 1

DIVISION 00 – INFORMATION AND CONTRACTING REQUIREMENTS

00 01 01	PROJECT TITLE PAGE
00 01 11	TABLE OF CONTENTS
00 31 00	AVAILABLE PROJECT INFORMATION
00 73 93	ENVIRONMENTAL HEALTH AND SAFETY REQUIREMENTS*

DIVISION 01 - GENERAL REQUIREMENTS

01 11 00	SUMMARY OF WORK
01 18 13	UTILITY SERVICE CONNECTIONS
01 20 00	CONTRACT CONSIDERATIONS
01 25 00	SUBSTITUTION PROCEDURES
01 26 00	CONTRACT MODIFICATION PROCEDURES
01 29 76	PROGRESS PAYMENT PROCEDURES
01 31 00	PROJECT MANAGEMENT AND COORDINATION
01 31 19	PROJECT MEETINGS
01 32 16.13	CPM SCHEDULES
01 32 33	PHOTOGRAPHIC DOCUMENTATION
01 33 00	SUBMITTAL PROCEDURES
01 33 00.13	DOCUMENT CONTROL**
01 35 13	SPECIAL PRODUCT PROCEDURES
01 35 26	GOVERNMENT SAFETY REQUIREMENTS
01 42 20	REFERENCE STANDARDS AND DEFINITIONS
01 45 00	QUALITY CONTROL
01 45 23.13	TESTING FOR INDOOR AIR QUALITY, BASELINE INDOOR AIR QUALITY AND MATERIALS
01 50 00	TEMPORARY FACILITIES AND CONTROLS
01 51 33	TEMPORARY TELECOMMUNICATIONS
01 51 39	TEMPORARY SUPPORT OF UTILITIES
01 55 26	TRAFFIC CONTROL
01 55 26.13	TRAFFIC PERSON
01 57 13	TEMPORARY EROSION AND SEDIMENT CONTROL
01 57 26	SITE WATERING FOR DUST CONTROL
01 57 30	INDOOR ENVIRONMENTAL CONTROL
01 57 40	CONSTRUCTION INDOOR AIR QUALITY MANAGEMENT PLAN
01 60 00	PRODUCT REQUIREMENTS
01 71 23	FIELD ENGINEERING
01 71 23.16	CONSTRUCTION SURVEYING
01 73 29	CUTTING AND PATCHING
01 74 19	CONSTRUCTION WASTE MANAGEMENT AND DISPOSAL
01 75 00	STARTING AND ADJUSTING
01 77 00	CLOSEOUT PROCEDURES
01 78 23	OPERATION AND MAINTENANCE DATA

01 78 30 WARRANTIES AND BONDS
01 81 13 SUSTAINABLE DESIGN REQUIREMENTS
01 91 00 COMMISSIONING *

DIVISION 02 – EXISTING CONDITIONS

02 22 26 DUCT BANK ASSESSMENT
02 41 13 SELECTIVE SITE DEMOLITION
02 41 13.23 UTILITY LINE REMOVAL
02 41 13.33 RAILTRACK REMOVAL
02 41 19.01 REMOVE POLE
02 67 00 REMOVAL AND DISPOSAL OF CONTAMINATED RAIL ROAD TIES *

DIVISION 03 - CONCRETE

03 05 05 UNDERSLAB VAPOR BARRIER
03 10 00 CONCRETE FORMING AND ACCESSORIES
03 20 00 CONCRETE REINFORCING
03 30 00 CAST-IN-PLACE CONCRETE
03 30 10 CONCRETE FLOOR HARDENER
03 36 00 CONCRETE FLOOR FINISHES

DIVISION 04 - MASONRY

04 05 11 MASONRY MORTARING AND GROUTING
04 20 01 MASONRY VENEER
04 27 31 REINFORCED UNIT MASONRY

DIVISION 05 - METALS

05 12 00 STRUCTURAL STEEL FRAMING
05 21 00 STEEL JOIST FRAMING
05 31 00 STEEL DECKING
05 40 00 COLD-FORMED METAL FRAMING
05 50 00 METAL FABRICATIONS
05 51 00 METAL STAIRS
05 52 13 PIPE AND TUBE RAILINGS
05 53 05 METAL GRATINGS AND FLOOR PLATES

VOLUME 2

DIVISION 06 - WOOD, PLASTICS, AND COMPOSITES

06 10 00 ROUGH CARPENTRY
06 41 00 ARCHITECTURAL WOOD CASEWORK
06 61 00 SOLID POLYMER SURFACING FABRICATIONS

DIVISION 07 - THERMAL AND MOISTURE PROTECTION

07 05 23 AIR BARRIER SYSTEM PRESSURE TESTING
07 08 00 COMMISSIONING OF THERMAL AND MOISTURE PROTECTION *
07 14 00 FLUID-APPLIED WATERPROOFING
07 21 00 THERMAL INSULATION
07 25 00 AIR BARRIER SYSTEM
07 41 13 METAL ROOF PANELS
07 42 13 METAL WALL PANELS
07 42 64 ALUMINUM COMPOSITE MATERIAL WALL PANELS
07 54 00 THERMOPLASTIC MEMBRANE ROOFING
07 62 00 SHEET METAL FLASHING AND TRIM
07 72 00 ROOF ACCESSORIES
07 84 00 FIRESTOPPING
07 90 05 JOINT SEALERS

DIVISION 08 - OPENINGS

08 08 00 COMMISSIONING OF OPENINGS *
08 11 13 HOLLOW METAL DOORS AND FRAMES
08 31 00 ACCESS DOORS AND PANELS
08 33 23 OVERHEAD COILING DOORS
08 43 13 ALUMINUM-FRAMED STOREFRONTS
08 44 13 GLAZED ALUMINUM CURTAIN WALLS
08 62 23 TUBULAR SKYLIGHTS
08 71 00 DOOR HARDWARE
08 80 00 GLAZING

DIVISION 09 - FINISHES

09 21 16 GYPSUM BOARD ASSEMBLIES
09 22 16 NON-STRUCTURAL METAL FRAMING
09 30 00 TILING
09 51 00 ACOUSTICAL CEILINGS
09 65 00 RESILIENT FLOORING
09 68 13 TILE CARPETING
09 90 00 PAINTING AND COATING

DIVISION 10 - SPECIALTIES

10 11 01 VISUAL DISPLAY BOARDS
10 14 00 SIGNAGE
10 14 53 TRAFFIC SIGNAGE

10 21 13.16 SOLID PLASTIC TOILET COMPARTMENTS
10 22 13 WIRE MESH PARTITIONS
10 26 01 WALL AND CORNER GUARDS
10 28 00 TOILET, BATH, AND LAUNDRY ACCESSORIES
10 44 00 FIRE PROTECTION SPECIALTIES
10 51 00 LOCKERS
10 56 00 STORAGE EQUIPMENT
10 75 00 FLAGPOLE

DIVISION 11 - EQUIPMENT

11 06 00 EQUIPMENT SCHEDULE
11 11 36 VEHICLE CHARGING EQUIPMENT
11 13 13 LOADING DOCK BUMPERS
11 40 00 FOOD SERVICE EQUIPMENT
11 96 00 SHOP EQUIPMENT

DIVISION 12 - FURNISHINGS

12 24 00 WINDOW SHADES

DIVISION 13 – SPECIAL CONSTRUCTION

13 34 23.10 PRE-FABRICATED HAZARDOUS MATERIALS STORAGE STRUCTURES

DIVISION 14 – CONVEYING EQUIPMENT

14 20 10 PASSENGER ELEVATORS

DIVISION 21 – FIRE SUPPRESSION

21 05 00 COMMON WORK RESULTS FOR FIRE SUPPRESSION
21 05 17 SLEEVES AND SLEEVE SEALS FOR FIRE-SUPPRESSION PIPING
21 05 18 ESCUTCHEONS FOR FIRE-SUPPRESSION PIPING
21 05 48 VIBRATION AND SEISMIC CONTROLS FOR FIRE-SUPPRESSION PIPING AND EQUIPMENT
21 13 13 AUTOMATIC SPRINKLER SYSTEM

DIVISION 22 – PLUMBING

22 00 00 PLUMBING
22 07 00 PLUMBING INSULATION
22 08 00 PLUMBING SYSTEMS COMMISSIONING *
22 13 13 FACILITY SANITARY SEWERS
22 13 73 FACILITY FLOOR DRAIN WATER TANKS

DIVISION 23 – HEATING, VENTILATION, AND AIR-CONDITIONING (HVAC)

23 05 00	COMMON WORK RESULTS FOR HVAC
23 05 13	COMMON MOTOR REQUIREMENTS FOR HVAC EQUIPMENT
23 05 17	SLEEVES AND SLEEVE SEALS FOR HVAC PIPING
23 05 29	HANGERS AND SUPPORTS FOR HVAC PIPING AND EQUIPMENT
23 05 48	VIBRATION AND SEISMIC CONTROLS FOR HVAC PIPING AND EQUIPMENT
23 05 53	IDENTIFICATION FOR HVAC PIPING AND EQUIPMENT
23 05 93	TESTING, ADJUSTING, AND BALANCING FOR HVAC
23 07 13	DUCT INSULATION
23 08 00	HVAC SYSTEMS COMMISSIONING *
23 09 23	BUILDING AUTOMATION SYSTEM
23 23 00	REFRIGERANT PIPING
23 29 23	VARIABLE FREQUENCY DRIVES
23 31 13	METAL DUCTS
23 33 00	AIR DUCT ACCESSORIES
23 36 00	AIR TERMINAL UNITS
23 51 00	LISTED TYPE III VENTS
23 55 23	GAS-FIRED RADIANT HEATERS
23 74 13	PACKAGED OUTDOOR ROOFTOP AIR-HANDLING UNITS
23 74 33	ENERGY RECOVERY UNITS
23 81 26	SPLIT-SYSTEM AIR-CONDITIONERS

VOLUME 3

DIVISION 26 – ELECTRICAL

26 01 00	BASIC ELECTRICAL REQUIREMENTS
26 05 00	COMMON WORK RESULTS FOR ELECTRICAL
26 05 13.19	SITE - MEDIUM VOLTAGE CABLES
26 05 19	LOW-VOLTAGE ELECTRICAL POWER CONDUCTORS AND CABLES
26 05 26	GROUNDING AND BONDING FOR ELECTRICAL SYSTEMS
26 05 29	HANGERS AND SUPPORTS FOR ELECTRICAL SYSTEMS
26 05 33	RACEWAYS AND BOXES FOR ELECTRICAL SYSTEMS
26 05 43.13	CLEANING UNDERGROUND DUCTS
26 05 48	VIBRATION AND SEISMIC CONTROLS FOR ELECTRICAL SYSTEMS
26 05 53	IDENTIFICATION FOR ELECTRICAL SYSTEMS
26 05 73	OVERCURRENT PROTECTIVE DEVICE COORDINATION STUDY
26 08 00	ELECTRICAL SYSTEMS COMMISSIONING *
26 09 23	LIGHTING CONTROL DEVICES
26 12 00	MEDIUM VOLTAGE TRANSFORMERS
26 13 00	MEDIUM VOLTAGE SWITCHGEAR
26 22 00	LOW-VOLTAGE TRANSFORMERS
26 24 16	PANELBOARDS
26 27 13	ELECTRICITY METERING
26 27 26	WIRING DEVICES
26 28 13	FUSES
26 28 16	ENCLOSED SWITCHES AND CIRCUIT BREAKERS
26 32 13	ENGINE GENERATORS
26 33 53	STATIC UNINTERRUPTIBLE POWER SUPPLY
26 36 00	TRANSFER SWITCHES
26 41 13	LIGHTNING PROTECTION FOR STRUCTURES
26 51 00	INTERIOR LIGHTING
26 56 26	SITE LIGHTING
26 56 29	SERVICE ENTRANCE AND CABINET
26 56 30	TEMPORARY ILLUMINATION UNIT

DIVISION 27 – COMMUNICATIONS

27 05 36	CABLE TRAYS FOR COMMUNICATIONS SYSTEMS
27 11 00	COMMUNICATIONS EQUIPMENT ROOM FITTINGS
27 13 00	COMMUNICATIONS BACKBONE CABLING
27 14 00	COMMUNICATIONS OUTSIDE PLANT CABLING
27 15 00	COMMUNICATIONS HORIZONTAL CABLING
27 51 16	PUBLIC ADDRESS SYSTEMS
27 51 23	INTERCOM SYSTEMS

DIVISION 28- ELECTRONIC SAFETY AND SECURITY

28 01 00	BASIC SECURITY SYSTEMS REQUIREMENTS
28 05 13	CONDUCTORS AND CABLES FOR ELECTRONIC SAFETY AND SECURITY
28 13 00	ACCESS CONTROL SYSTEM
28 23 00	VIDEO SURVEILLANCE SYSTEM
28 31 11	DIGITAL, ADDRESSABLE FIRE-ALARM SYSTEM

DIVISION 31 – EARTHWORK

31 11 00	CLEARING AND GRUBBING
31 22 16.23	ROADWAY SUBGRADE FORMATION
31 23 16	EXCAVATION
31 23 16.13	TRENCHING
31 23 19	DEWATERING
31 23 23	FILL
31 23 23.14	PERVIOUS STRUCTURE BACKFILL
31 23 23.33	FLOWABLE FILL
31 35 19.17	GEOTEXTILE (SEPARATION - HIGH SURVIVABILITY)
31 41 00	SHORING
31 62 13.19	PRECAST PRESTRESSED CONCRETE PILES

DIVISION 32 – EXTERIOR IMPROVEMENTS

32 11 23	AGGREGATE BASE COURSES
32 12 16	ASPHALT PAVING
32 16 13.13	CAST-IN-PLACE CONCRETE CURBS AND GUTTERS
32 16 13.43	STONE CURBS
32 16 23.13	CONCRETE SIDEWALK
32 16 23.16	CONCRETE PAD
32 17 23.13	PAINTED PAVEMENT MARKINGS
32 17 26.01	RUMBLE STRIPS - MANUAL
32 31 13	CHAIN LINK FENCES AND GATES
32 33 13	SITE BICYCLE RACKS
32 33 43.23	SITE BOLLARDS
32 91 19.13	TOPSOIL PLACEMENT AND GRADING
32 92 19	SEEDING

DIVISION 33 - UTILITIES

33 01 30.16	TV INSPECTION OF SEWER PIPELINES
33 22 00	WATER DISTRIBUTION SYSTEM
33 41 10	PUMPING STATION
33 41 13	PUBLIC STORM UTILITY DRAINAGE PIPING
33 41 20	FORCE MAIN
33 44 19.21	HYDRODYNAMIC SEPARATOR
33 49 00	STORM DRAINAGE STRUCTURES
33 49 27	STORM DRAINAGE TIDEGATE MANHOLE

DIVISION 34 - TRANSPORTATION

34 11 26.13	TRACK RAIL BALLAST

DIVISION 41 – MATERIAL PROCESSING AND HANDLING EQUIPMENT

41 22 00	CRANES AND HOISTS
41 63 00	GENERAL VEHICLES

DIVISION 44 – POLLUTION CONTROL EQUIPMENT

44 11 16 INDUSTRIAL DUST COLLECTORS
44 11 37 FUME AND EXHAUST EXTRACTION SYSTEMS

* Not authored by Parsons Brinckerhoff
** Not authored by Parsons Brinckerhoff; provided by SHAW

END OF TABLE OF CONTENTS

SECTION 26 01 00 - BASIC ELECTRICAL REQUIREMENTS

PART 1 - GENERAL

1.1 SUMMARY

A. This section includes the following:

1. General Conditions.
2. Sleeves and Box-outs.
3. Painting.
4. Plywood backboards.
5. Housekeeping Pads.

1.2 RELATED SECTIONS

A. Electrical requirements described in this Section apply to all Sections of Divisions 26, 27 and 28. Divisions 26, 27 and 28 specification sections are interrelated and what is called for by one section shall be deemed as required by the other sections. An individual specification section that lists other specific sections in RELATED SECTIONS is done for the convenience of the reader and is not to be construed as the only related sections.

B. Drawings and general provisions of Trade Contract, including General and Supplementary Conditions and Division 01 Specification Sections, apply to all sections of Divisions 26, 27 and 28.

C. Division 02 – Existing Conditions

D. Division 03 - Concrete

E. Division 07 – Thermal and Moisture Protection

F. Division 08 - Openings

G. Division 09 - Finishes

H. Division 10 - Specialties

I. Division 11 - Equipment

J. Division 12 – Furnishings

K. Division 13 – Special Construction

L. Division 14 - Conveying Systems

M. Division 21 – Fire Suppression Systems

N. Division 22 - Plumbing

O. Division 23 – HVAC

P. Division 27 – Communications

Q. Division 28 – Electronic Safety and Security

R. Division 31 – Earthwork

S. Division 32 – Exterior Improvements

T. Division 33 - Utilities

1.3 DEFINITIONS

A. Refer to Division 1 for definitions used in the Contract Documents. Some of the following definitions are duplicated from that reference for a specific purpose or are additions applicable to this Division.

1. Provide: Furnish, install and connect.
2. Wiring: Wire or cable installed in conduit with all required boxes, fittings, connectors, etc.
3. Work: Materials completely installed, including the labor involved.
4. Conduit: Rigid galvanized steel conduit (RGSC), electrical metallic tubing (EMT), intermediate metal conduit (IMC), rigid non-metal conduit (RNC), or flexible metal conduit (FMC).
5. Branch Circuit: The circuit conductors between the final overcurrent device protecting the circuit and the loads or outlets.
6. Feeder: All circuit conductors between the service equipment, the source of a separately derived system, or other power supply source and the final branch circuit overcurrent devices.
7. Where shown or where indicated: Reference to Drawings, item or items.
8. Or equal: Shall mean equivalent as approved by the CTDOT PM.

1.4 SYSTEM DESCRIPTION

A. The extent of Division 26 work shall be as shown on the Electrical Drawings. This Division includes all the electrical work except that work specifically designated as being specified or required by other Divisions. Work is to include all labor and material necessary for the complete electrical installation and proper operation of all electrical systems including but not limited to equipment associated with the HVAC, Fire Protection, Fire Alarm and Plumbing Systems.

B. Drawings: The Electrical Drawings are diagrammatic in nature except where specific dimensions, or specific details, are shown. Refer to other project drawings for exact locations of equipment, building dimensions, Architectural details and conditions affecting the electrical work.

1.5 SUBMITTALS

A. General: Unless otherwise indicated, all submittals shall be made in accordance with requirements as specified herein and in Division 1 Section Submittal Procedures.

B. All material lists and shop drawing submittals shall include a stamped indication signifying that the submittals have been previously reviewed for compliance with the Contract Documents, that all coordination required prior to field installation has occurred and that the material being submitted is approved for installation. The stamped indication shall include the name of the Contracting Firm, the date of the review and the signature of the Trade Contractor. The Engineer will not review the shop drawing submittals without the Trade Contractors stamped approval on the shop drawings. The responsibility of complying with the Contract Documents shall not be relieved by the Engineer's review and comments. The Engineer's review requires not less than two (2) weeks from date the shop drawings are received by the Engineer. Submittals for equipment specified in each Section, with the exception of samples, shall be bound and submitted as a complete package. The submittal may be included in more than one volume. However, the submittal shall be separated into groups of types of equipment as follows:

1. Group I – Devices:

    a. Wall Switches
    b. Wall Dimmer Switches
    c. Occupancy Sensors
    d. Receptacles
    e. Coverplates
    f. Time Clocks
    g. Photocells
    h. Contactors
    i. Cable Trays
    j. Fire Protection Seals, UL Assembly Details

2. Group II - Switchgear:

    a. Medium Voltage Switchgear
    b. Medium Voltage Tramsformers
    c. Distribution Panelboards
    d. Lighting and Appliance Branch Circuit Panelboards
    e. Dry-Type Transformers
    f. Disconnect Switches
    g. Circuit Breakers
    h. Metering Equipment
    i. Lightning Arrestors
    j. Fuses
    k. Transient Voltage Surge Suppressors

3. Group III - Lighting:

    a. Lighting Fixtures
    b. Ballasts

c. Lamps

4. Group IV - Systems:

a. Grounding System
b. Lightning Protection System.

5. Group V - Wire:

a. Medium Voltage Cables
b. Conductors, 0-600 Volts

6. Group VI - Emergency Systems:

a. Standby Generators
b. Automatic Transfer Switches

7. Group VI – Division 27 Communications:

a. Wiring Plant and Cable Labeling
b. Voice/Data Wire
c. Fiber Optic Cable
d. Outlets, Faceplates & Jacks
e. Termination Patch Panels, Racks and Accessories

8. Group VIII – Division 28 Electronic Safety and Security Systems:

a. Fire Alarm System
b. CCTV System
c. Card Access System

C. Product Data: Manufacturers technical product literature, including specifications and installation instructions for each component and system as listed in Products, Part 2, of each section.

D. Shop Drawings: Dimensioned drawings and layouts showing location of system components, accessories and secondary systems. Include wiring diagrams, connections and special installation details.

E. Coordination Drawings: Detailed layout drawings showing primary elements, components and systems of electrical equipment and materials in relationship with other building components.

1. Indicate clearances for servicing and maintaining equipment.
2. Indicate locations where space is limited and sequencing and coordination will affect efficient installation of the Work.

F. Quality Control Submittals: Provide the following for record:

1. Test Reports.
2. Certificates.
3. Manufacturers Instructions.
4. Manufacturers Field Reports.

G. Trade Contract Close-out Submittals: Provide tab pages with metal or plastic reinforced holes to separate each major item or closely related group of items with typed item names on the tabs. Supply a table of contents at the beginning of each volume listing all items, the manufacturers and the name, address and phone number of the nearest authorized service representative. In addition to operation, maintenance and lubrication instructions, the manuals shall include the following:

1. Parts lists.
2. Power and control wiring diagrams.
3. Elementary or schematic wiring diagrams.
4. Manufacturers recommended tightening torque for connections where applicable.

H. Project Record Documents: Furnish project record documents in AutoCAD 2004 or latest MNR Version in accordance with General Conditions and Division 1. Include marked up as-built drawings indicating proper circuit numbers, conduit homeruns, branch conduit runs, and other such pertinent data. Mark the actual installed depths of all buried electrical conduit or cable and show the measured horizontal distance from permanent construction, such as building walls. Especially mark where any riser conduit occurs. Include the following:

1. "As-built" conduit layout diagrams, including wire color code and/or tag number.
2. Complete "as-built" wiring diagrams.
3. Detailed catalog data on all installed system components.
4. Copy of the test reports described elsewhere.

I. Operation and maintenance data warranty: Provide three copies at time of Final Completion in accordance with the General Conditions and Division 01. Use multiple binders if a single binder would exceed 2-1/2" in thickness. Arrange the data in the same sequence as the specification Section. Delete or mark through extraneous data. Before final acceptance of work, the Trade Contractor shall deliver the composite "Operating and Shop Maintenance Manual." Each manual shall contain, but not be limited to:

1. A statement of guarantee, including date of termination and name and phone number of the person to be called in event of equipment failure.
2. Individual factory-issued manuals containing all technical information on each piece of equipment installed. In the event such manuals are not obtainable from the factory, it shall be the responsibility of the Trade Contractor to compile and include them. Advertising brochures or operational instructions shall not be used in lieu of the required technical manuals.

1.6 SUBSTITUTIONS

A. Throughout the Specifications, types of material may be specified by manufacturer’s name and catalog number in order to establish standards of quality and performance. Where one or more manufacturers are listed for a product, without the words "or equal", provide the equipment of one of the manufacturers listed. Where one or more manufacturers are listed followed by the words "or equal", provide the product of one of the manufacturers listed, or request a substitution of a product of equal quality, performance and function as specified in Division 01. However, the burden is upon the requester to prove such equivalence. He must request the CTDOT PM’s approval (in writing) to substitute such item for the specified item, with

supporting data (and samples, it required) to permit a fair evaluation of the proposed substitute with respect to quality, serviceability, warranty and cost.

B. When a substitute item is proposed, all costs associated with changes to incorporate the substituted item shall be borne by the Trade Contractor without incurring additions to the Trade Contract.

1.7 QUALITY ASSURANCE

A. Qualifications: Manufacturers shall have minimum 5 years experience in the manufacture of the indicated products.

B. Regulatory Requirements: All products (including equipment) furnished for the electrical installation shall bear the Listing Mark or Classification Marking (label) of UL where such marking is available or other approved testing agency. Products which are not listed will not be acceptable.

C. The work under Divisions 26, 27 and 28 shall comply with relevant portions of the following. The most stringent shall apply where a code conflict occurs.

1. Federal Occupational Safety and Health Act.
2. Americans with Disabilities Act (ADA).
3. 2005 Connecticut State Building Code with 2013 Amendments.
4. International Building Code, 2003.
5. NFPA-13 Installation of Sprinkler Systems.
6. NFPA-37 Installation and Use of Stationary Combustion Engines and Gas Turbines.
7. NFPA-70 National Electrical Code (NEC), 2011 with 2013 Connecticut State Amendments.
8. NFPA-72 National Fire Alarm Code.
9. NFPA-90A Installation of Air Conditioning and Ventilation Systems
10. NFPA-101 Life Safety Code.
11. NFPA-110 Emergency and Standby Power Systems.
12. NFPA-780 Lightning Protection Code.
13. International Energy Conservation Code (IECC), 2009 Edition
14. 2005 Connecticut State Fire Safety Code.

D. Where different sections of any of the aforementioned codes and regulations, or the Contract Documents, require different materials, methods of construction or other requirements, the most restrictive shall govern. In any conflict between a general provision and a special provision, the special provision shall govern. In case of differences between the drawings and the specifications, or where the drawings and specifications are not clear, the higher cost alternative shall be included in the contract and the subject shall be referred to the CTDOT PM for clarification and instructions.

1.8 DELIVERY STORAGE AND HANDLING

A. Packing and Shipping: All materials shall be packed to prevent damage during shipping. Packing shall include plastic rap and crating. Coordinate shipping of items to the jobsite to prevent exposure to weather. Equipment will not be permitted to be stored outside.

B. Acceptance at Site: Receive delivery of electrical equipment and protect from the weather at all times during storage and construction.

C. Storage and Protection: Provide offsite storage of equipment if building is not totally enclosed and ready to accept equipment. Manufacturer's recommendations with regard to storage and protection shall be followed. Should any apparatus be subjected to possible damage by water, it shall be replaced with new apparatus, or at the direction of the CTDOT PM, thoroughly dried and put through a dielectric test to ascertain the suitability of the apparatus, or it shall be replaced, in either case without incurring additions to the Trade Contract.

1.9 PROJECT / SITE CONDITIONS

A. Before ordering any equipment, the physical size of all equipment shall be checked to properly fit the allotted spaces shown, and to satisfy all NEC required clearances.

B. Environmental Requirements: Comply with manufacturer’s requirements for environmental conditions during shipping, storage, installation, testing and operation. Maintain manufacturers recommended ambient conditions such as temperature, humidity, altitude, ventilation, etc.

C. Field Measurements: Measure and confirm field conditions prior to installation of equipment. Notify CTDOT PM and Owner within 24 hours of any discrepancy or code violations caused by field conditions.

1.10 SEQUENCING, SCHEDULING AND COORDINATION

A. Work shall be coordinated to preclude interference between the work of different trades and to ensure necessary clearances at crossovers and equipment. Work requiring necessarily fixed locations (e.g., piping with required slopes, lighting fixtures in ceilings, etc.) shall take precedence over work not requiring such fixed locations. Furnish all labor, materials and incidental elements, such as junction and pull boxes, fittings, pull wires, connectors, support materials, fuses, lamps and labels, along with other necessary requirements to install, connect, start-up and result in complete and working systems in accordance with the requirements of the Contract Documents.

B. Provide all wiring, connectors, fittings and all other accessories necessary for the complete installation of, and final connections to, equipment furnished under other Divisions and/or by the Owner where shown. Secure approved shop drawings from all required disciplines and verify final electrical characteristics before roughing power feeds to any equipment. When electrical data on approved shop drawings differs from contemplated design, notify the CTDOT PM before proceeding with the installation. Attention is called to the fact that certain features of control, other functions, or systems may be specified in this Division by performance, and as such, all elements of wiring or other materials and devices required for the complete installation may not be shown.

C. Coordinate electrical equipment and materials installation with other building components.

D. Arrange for chases, slots, and openings in other building components to allow for electrical installations.

E. Coordinate the installation of required supporting devices, conduit, and sleeves to be set in poured in place concrete and other structural components, as they are constructed.

F. Sequence, coordinate, and integrate installations of electrical materials and equipment for efficient flow of the Work. Give particular attention to large equipment requiring positioning prior to closing in the building.

G. Coordinate the cutting and patching of building components to accommodate the installation of electrical equipment and materials.

1.11 PERMITS/LICENSES/FEES

A. Obtain all permits and licenses, and pay all fees as required for execution of the Trade Contract. Arrange for necessary inspections required by the city, county, territory and other authorities having jurisdiction, and present certificates of approval to the Construction Manager.

1.12 WARRANTY

A. All work specified in Divisions 26, 27 and 28 shall be guaranteed to be free from defects in material and workmanship for a period of eighteen months from date of substantial completion. Lamps for lighting fixtures or indicating devices, which fail to operate due to normal mortality rates, are excluded from this guarantee unless a part of a normal manufacturers' guarantee of total life for a lamp and fixture system.

B. Fixture or device damage resulting from a lamp failure shall fall within the required guarantee.

C. During this guarantee period, all defects in materials and workmanship shall be corrected without incurring additions to the Trade Contract. The correction shall include all required cutting, patching, repainting, or other work involved, including repair or restoration of any damaged sections or parts of the premises resulting from any fault included in the guarantee.

D. In addition to this general guarantee, present to the Owner any other guarantees or warranties from equipment or system manufacturers. These supplemental guarantees or warranties shall not invalidate the general guarantee.

E. The eighteen month warranty period shall commence upon system acceptance by the Owner.

F. In the event that defects in materials or workmanship are encountered during the warranty period, the Trade Contractor shall provide all materials and labor required for prompt and proper correction of such defects at no additional cost to the Owner.

1.13 TEMPORARY LIGHT AND POWER

A. Provide a temporary, construction area service of minimum 200A at 208/120V, 3-phase, 4-wire. Branch circuit requirements for building temporary lighting and power as follows:

1. Sufficient wiring, outlets and lamps shall be installed to insure proper lighting in accordance with OSHA, state and municipal codes.

B. Provide all necessary transformers, cables, panelboards, ground fault devices, switches and accessories required by the temporary light and power installation.

C. Install and maintain a feeder, or feeders, of sufficient capacity for the requirements of all areas. Also provide a sufficient number of outlets, located at convenient points throughout the construction area.

D. Remove all temporary service equipment, wiring and accessories after they have served their purpose.

PART 2 - PRODUCTS

2.1 GENERAL MATERIALS AND WORKMANSHIP

A. Materials and apparatus required for the work shall be new, of first-class quality, and shall be furnished, delivered, erected, connected, finished in every detail, and shall be so selected and arranged as to fit properly into the building spaces in compliance with all requirements.

B. Manufacturer's catalog numbers listed are not necessarily complete. Products provided shall be a standard product which has a history of successful installation and operation for a minimum period of two years. Prototype or custom made equipment is not acceptable unless so specified.

C. Manufacturer's instructions shall be obtained and used for the installation of all equipment and devices where such manufacturers' instructions are available.

2.2 PAINTING

A. See specification Division 09 for paint requirements.

2.3 PLYWOOD BACKBOARDS

A. 3/4" thick, softwood face plywood backboard with equipment mounting sides "finish grade", and all sides and edges painted with at least two coats of fire retardant black paint.

2.4 HOUSEKEEPING PADS

A. Concrete pads shall be 4" high unless otherwise noted. Exposed edges shall be constructed with 3/4" chamfer.

B. See Division 03 specification requirements for concrete materials.

PART 3 - EXECUTION

3.1 INSTALLATION

A. Applicable provisions of the latest edition of NECA 1 ”Standard Practices for Good Workmanship in Electrical Construction”, published by the National Electrical Contractors Association (NECA) shall set the standard for installation of materials and equipment and for workmanship. Install all materials in a neat and orderly manner. Cover conduits, boxes, cabinets, and other enclosures with plastic covers or caps to prevent entrance of plaster, concrete, or other debris when work is not being done. Materials and equipment shall be installed using tools and equipment designed for the particular application.

B. Manufacturer's instructions shall be obtained and used for the installation of all equipment and devices where such manufacturer's instructions are available.

3.2 PHASE ROTATION

A. The phase rotation (A, B, C) of all service entrance, distribution and branch circuit installations shall be maintained throughout the entire project.

B. Test the phase rotation at all distribution equipment to verify compliance.

3.3 PAINTING

A. The surface of ungalvanized troughs, metal frames, support racks and plywood backboards, provided under this Section, shall be painted. Clean surfaces completely of all oil, wax, rust and old paint prior to painting. Paint shall be applied to backboards before switches, troughs and devices are installed on them. Paint shall include a primer and two coats of finished paint. Backboards shall be painted with a flame retardant paint. Scratched or marred surfaces of lighting fixtures and other equipment shall be touched-up with paint specifically intended for that purpose, furnished by the equipment manufacturer.

B. Where equipment finish is damaged, touch up by wire brushing clean and applying two coats of rust inhibitive primer and two coats of epoxy enamel to match factory finish.

C. See Division 09 for additional installation requirements.

3.4 PLYWOOD BACKBOARDS

A. Where two or more items of equipment, such as safety switches, motor controllers, timers or contactors, are installed in one location, provide a plywood backboard for equipment mounting.

B. Backboard sizes shall be large enough to accommodate the equipment or devices to be mounted thereon. Backboard shall be attached to the wall or metal frame with not less than four bolts.

3.5 HOUSEKEEPING PADS

A. Provide concrete pad for floor mounted electrical equipment such as distribution panelboards, transformers, automatic transfer switches, etc. Pads shall be sloped slightly outward from edge of equipment.

B. Provide concrete pads for all exterior grade mounted equipment.

3.6 EQUIPMENT ACCESS

A. Install equipment so it is readily accessible for maintenance and operation. Provide access doors where required.

3.7 FIELD QUALITY CONTROL

A. Tests and Reports: All systems and equipment shall be extensively tested by the electrical contractor prior to final inspection. Each test shall be signed off by the Owner in writing.

B. At the time of the final inspection or at such time as part of the system may be completed, all electrical systems shall be tested, in the presence of the CTDOT PM, for compliance with the Contract Documents. Furnish all necessary personnel and equipment, such as measuring instruments for current, voltage and resistance, and ladders, two-way radios, lights, etc. to assist the Owner in conducting the tests. Authorized representatives of the manufacturer of specialty equipment or systems shall be present during the tests to demonstrate compliance with the Contract Documents.

C. Perform operational tests on all systems. Every system test report shall be performed according to the manufacturers instruction and shall include the following documentation, which shall be delivered to the Owner or a representative upon final acceptance of the system:

1. Summary of Project.
2. A complete list of equipment tested.
3. Description of test.
4. Indication that all equipment is properly installed and functions in conformance with the specifications.
5. Tests results of equipment as applicable.
6. Conclusions and recommendations
7. Appendix, including appropriate test forms.
8. List of test equipment used.
9. Technician's name, certificate number and date.

D. Final tests and inspection shall be held in the presence of the Owner's representatives and to their satisfaction. The Trade Contractor shall supply personnel and required auxiliary equipment for this test.

E. The complete system shall be tested to ensure that it is operating properly.

3.8 TEST INSTRUMENT CALIBRATION

A. Calibrate instruments in accordance with the following frequency schedule:

1. Field Instruments: Analog - 6 months maximum. Digital - 12 months maximum.
2. Laboratory Instruments - 12 months maximum.
3. Leased Specialty Equipment - 12 months.

B. Dated calibration labels shall be visible on all test equipment.

C. Records must be kept up to date which show date and results of instruments calibrated or tested.

D. Maintain an up-to-date instrument calibration instruction procedure.

E. Calibrating standard shall be of a higher accuracy than that of the instrument tested.

3.9 DEMONSTRATION

A. All training shall be scheduled and take place in a location and date agreed upon by the Owner. A course outline of the training program shall be forwarded to the CTDOT PM for delivery to the Owner at least three weeks in advance of presentation of each course. All training hours shall take place between the hours of 7:00 AM to 4:00 PM, Monday through Friday.

B. Operational and Maintenance Training: Furnish time by responsible and knowledgeable representatives to fully instruct the Owner in the location, function and operation of devices and equipment specified in Division 26. Instruct the Owner in the maintenance of all items of equipment for which an operating and maintenance manual is specified.

3.10 TRAINING AND TESTING SCHEDULE

A. Provide a schedule detailing the outline, date and duration of all training and testing no later than 60 days after the award of trade contract. Submit all dates to the Owner for approval. Coordinate all dates with Owner, Manufacturers, Utilities and all other parties involved.

B. The Owner reserves the right to revise the schedule without incurring delay or additional cost to the trade contract.

3.11 PROTECTION

A. Protect all electrical equipment from damage at all times. Cover and enclose all equipment to protect from damage by water or moisture.

3.12 ADJUSTMENT

A. Calibrate and adjust all equipment in accordance with manufacturer's instruction. Adjust and set all circuit breakers and relays in accordance with the coordination study when required by other specification sections.

3.13 CLEANING

A. At completion of the work, clean all elements of the electrical system so that all markings deteriorating the original finish appearance are removed. All lighting fixtures and lenses shall be cleaned inside and out. All lamps shall be left clear of dust, smudges and grime.

B. Additionally, examine the interiors of panelboards, cabinets, lighting fixtures, boxes, and like components where conduit and/or wire connections have been made, and all resulting wire ends, insulation cuttings, knock-out plugs, metal filings and any other construction debris shall be removed so that interiors and exteriors are clean.

END OF SECTION 26 01 00

SECTION 26 05 00 - COMMON WORK RESULTS FOR ELECTRICAL

PART 1 - GENERAL

1.1 RELATED DOCUMENTS

A. Drawings and general provisions of the Trade Contract, including General and Supplementary Conditions and Division 01 Specification Sections, apply to this Section.

1.2 SUMMARY

A. Section Includes:

1. Electrical equipment coordination and installation.
2. Sleeves for raceways and cables.
3. Sleeve seals.
4. Grout.
5. Common electrical installation requirements.

1.3 DEFINITIONS

A. EPDM: Ethylene-propylene-diene terpolymer rubber.

B. NBR: Acrylonitrile-butadiene rubber.

1.4 SUBMITTALS

A. Product Data: For sleeve seals.

1.5 COORDINATION

A. Coordinate arrangement, mounting, and support of electrical equipment:

1. To allow maximum possible headroom unless specific mounting heights that reduce headroom are indicated.
2. To provide for ease of disconnecting the equipment with minimum interference to other installations.
3. To allow right of way for piping and conduit installed at required slope.
4. So connecting raceways, cables, wireways, cable trays, and busways will be clear of obstructions and of the working and access space of other equipment.

B. Coordinate installation of required supporting devices and set sleeves in cast-in-place concrete, masonry walls, and other structural components as they are constructed.

C. Coordinate location of access panels and doors for electrical items that are behind finished surfaces or otherwise concealed. Access doors and panels are specified in Division 08 Section "Access Doors and Frames."

D. Coordinate sleeve selection and application with selection and application of firestopping specified in Division 07 Section " Firestopping."

PART 2 - PRODUCTS

2.1 SLEEVES FOR RACEWAYS AND CABLES

A. Steel Pipe Sleeves: ASTM A 53/A 53M, Type E, Grade B, Schedule 40, galvanized steel, plain ends.

B. Cast-Iron Pipe Sleeves: Cast or fabricated "wall pipe," equivalent to ductile-iron pressure pipe, with plain ends and integral waterstop, unless otherwise indicated.

C. Sleeves for Rectangular Openings: Galvanized sheet steel.

1. Minimum Metal Thickness:

a. For sleeve cross-section rectangle perimeter less than 50 inches (1270 mm) and no side more than 16 inches (400 mm), thickness shall be 0.052 inch (1.3 mm).
b. For sleeve cross-section rectangle perimeter equal to, or more than, 50 inches (1270 mm) and 1 or more sides equal to, or more than, 16 inches (400 mm), thickness shall be 0.138 inch (3.5 mm).

2.2 SLEEVE SEALS

A. Description: Modular sealing device, designed for field assembly, to fill annular space between sleeve and raceway or cable.

1. Manufacturers: Subject to compliance with requirements, available manufacturers offering products that may be incorporated into the Work include, but are not limited to, the following:

a. Advance Products & Systems, Inc.
b. Calpico, Inc.
c. Metraflex Co.
d. Pipeline Seal and Insulator, Inc.

2. Sealing Elements: EPDM interlocking links shaped to fit surface of cable or conduit. Include type and number required for material and size of raceway or cable.
3. Pressure Plates: Carbon steel. Include two for each sealing element.
4. Connecting Bolts and Nuts: Carbon steel with corrosion-resistant coating of length required to secure pressure plates to sealing elements. Include one for each sealing element.

2.3 GROUT

A. Nonmetallic, Shrinkage-Resistant Grout: ASTM C 1107, factory-packaged, nonmetallic aggregate grout, noncorrosive, nonstaining, mixed with water to consistency suitable for application and a 30-minute working time.

PART 3 - EXECUTION

3.1 COMMON REQUIREMENTS FOR ELECTRICAL INSTALLATION

A. Comply with NECA 1.

B. Measure indicated mounting heights to bottom of unit for suspended items and to center of unit for wall-mounting items.

C. Headroom Maintenance: If mounting heights or other location criteria are not indicated, arrange and install components and equipment to provide maximum possible headroom consistent with these requirements.

D. Equipment: Install to facilitate service, maintenance, and repair or replacement of components of both electrical equipment and other nearby installations. Connect in such a way as to facilitate future disconnecting with minimum interference with other items in the vicinity.

E. Right of Way: Give to piping systems installed at a required slope.

3.2 SLEEVE INSTALLATION FOR ELECTRICAL PENETRATIONS

A. Electrical penetrations occur when raceways, cables, wireways, cable trays, or busways penetrate concrete slabs, concrete or masonry walls, or fire-rated floor and wall assemblies.

B. Concrete Slabs and Walls: Install sleeves for penetrations unless core-drilled holes or formed openings are used. Install sleeves during erection of slabs and walls.

C. Use pipe sleeves unless penetration arrangement requires rectangular sleeved opening.

D. Fire-Rated Assemblies: Install sleeves for penetrations of fire-rated floor and wall assemblies unless openings compatible with firestop system used are fabricated during construction of floor or wall.

E. Cut sleeves to length for mounting flush with both surfaces of walls.

F. Extend sleeves installed in floors 4 inches (100 mm) above finished floor level.

G. Size pipe sleeves to provide 1/4-inch (6.4-mm) annular clear space between sleeve and raceway or cable, unless indicated otherwise.

H. Seal space outside of sleeves with grout for penetrations of concrete and masonry

1. Promptly pack grout solidly between sleeve and wall so no voids remain. Tool exposed surfaces smooth; protect grout while curing.

I. Interior Penetrations of Non-Fire-Rated Walls and Floors: Seal annular space between sleeve and raceway or cable, using joint sealant appropriate for size, depth, and location of joint. Comply with requirements in Division 07 Section "Joint Sealants."

J. Fire-Rated-Assembly Penetrations: Maintain indicated fire rating of walls, partitions, ceilings, and floors at raceway and cable penetrations. Install sleeves and seal raceway and cable penetration sleeves with firestop materials. Comply with requirements in Division 07 Section "Firestopping."

K. Roof-Penetration Sleeves: Seal penetration of individual raceways and cables with flexible boot-type flashing units applied in coordination with roofing work.

L. Aboveground, Exterior-Wall Penetrations: Seal penetrations using cast-iron pipe sleeves and mechanical sleeve seals. Select sleeve size to allow for 1-inch (25-mm) annular clear space between pipe and sleeve for installing mechanical sleeve seals.

M. Underground, Exterior-Wall Penetrations: Install cast-iron pipe sleeves. Size sleeves to allow for 1-inch (25-mm) annular clear space between raceway or cable and sleeve for installing mechanical sleeve seals.

3.3 SLEEVE-SEAL INSTALLATION

A. Install to seal exterior wall penetrations.

B. Use type and number of sealing elements recommended by manufacturer for raceway or cable material and size. Position raceway or cable in center of sleeve. Assemble mechanical sleeve seals and install in annular space between raceway or cable and sleeve. Tighten bolts against pressure plates that cause sealing elements to expand and make watertight seal.

3.4 FIRESTOPPING

A. Apply firestopping to penetrations of fire-rated floor and wall assemblies for electrical installations to restore original fire-resistance rating of assembly. Firestopping materials and installation requirements are specified in Division 07 Section "Firestopping."

END OF SECTION 26 05 00

SECTION 26 05 13.19 – SITE – MEDIUM-VOLTAGE CABLES

PART 1 - GENERAL

1.1 RELATED DOCUMENTS

A. Reference to CDOT shall consist of State of Connecticut department of Transportation Standard Specifications for Roads, Bridges and Incidental Construction, Form 816 including the latest supplements.

1.2 SUMMARY

A. Section includes cables and related cable splices, terminations, and accessories for medium-voltage (2001 to 35,000 V) electrical distribution systems.

1.3 DEFINITIONS

A. Jacket: A continuous nonmetallic outer covering for conductors or cables.

B. NETA ATS: Acceptance Testing Specification.

C. Sheath: A continuous metallic covering for conductors or cables.

1.4 ACTION SUBMITTALS

A. Product Data: For each type of cable. Include splices and terminations for cables and cable accessories.

B. Samples: 24-inch sample of each type of cable supplied to the site.

1.5 INFORMATIONAL SUBMITTALS

A. Qualification Data: For Installer and testing agency.

B. Material Certificates: For each type of cable and accessory.

C. Source quality-control reports.

D. Field quality-control reports.

1.6 QUALITY ASSURANCE

A. Installer: Engage a cable splicer, trained and certified by splice material manufacturer, to install, splice, and terminate medium-voltage cable.

B. Testing Agency Qualifications: Member company of NETA or an NRTL.

1. Testing Agency's Field Supervisor: Certified by NETA to supervise on-site testing.

1.7 FIELD CONDITIONS

A. Interruption of Existing Electric Service: Do not interrupt electric service to facilities occupied by Owner or others unless permitted under the following conditions and then only after arranging to provide temporary electric service according to requirements indicated:

1. Notify Construction Manager no fewer than five days in advance of proposed interruption of electric service.

2. Do not proceed with interruption of electric service without Owner's written permission.

PART 2 - PRODUCTS

2.1 MANUFACTURERS

A. Cables:

1. Manufacturers: Subject to compliance with requirements, provide products by one of the following:

a. Kerite Co. (The).

b. Okonite Company (The)

c. Pirelli Cables & Systems.

B. Cables Splicing and Terminating Products and Accessories:

1. Manufacturers: Subject to compliance with requirements, provide products by one of the following:

a. 3M.

b. Cooper Power Systems (Formerly RTE Components).

c. Raychem; TE Connectivity.

d. Thomas & Betts Corporation, A Member of the ABB Group.

C. Source Limitations: Obtain cables and accessories from single source from single manufacturer.

2.2 SYSTEM DESCRIPTION

A. Electrical Components, Devices, and Accessories: Listed and labeled as defined in NFPA 70, by a qualified testing agency, and marked for intended location and application.

B. Comply with IEEE C2 and NFPA 70.

2.3 CABLES

A. Cable Type: Type MV 105.

B. Comply with UL 1072, AEIC CS8, ICEA S-93-639/NEMA WC 74, ICEA S-97-682, and ICEA S-94-649.

C. Conductor: Copper.

D. Conductor Stranding: Compact round, concentric lay, Class B.

E. Strand Filling: Conductor interstices are filled with impermeable compound.

F. Conductor Insulation: Ethylene-propylene rubber.

1. Voltage Rating: 15 kV.
2. Insulation Thickness: 133 percent insulation level.
3. Halogen content: less than .02 percent by weight.

G. Shielding: Copper tape, helically applied over semiconducting insulation shield.

H. Three-Conductor Cable Assembly: Three insulated, shielded conductors cabled together with ground conductors.

1. Circuit Identification: Color-coded tape (black, red, blue) under the metallic shielding.

I. Cable Jacket: Sunlight-resistant PVC.

2.4 CONNECTORS

A. Comply with ANSI C119.4 for connectors between aluminum conductors or for connections between aluminum to copper conductors.

B. Copper-Conductor Connectors: Copper barrel crimped connectors.

2.5 SOLID TERMINATIONS

A. Shielded-Cable Terminations: Comply with the following classes of IEEE 48. Insulation class shall be equivalent to that of cable. Include shield ground strap for shielded cable terminations.

1. Class 1 Terminations: Modular type, furnished as a kit, with stress-relief tube; multiple, molded-silicone-rubber, insulator modules; shield ground strap; and compression-type connector.
2. Class 1 Terminations: Heat-shrink type with heat-shrink inner stress control and outer nontracking tubes; multiple, molded, nontracking skirt modules; and compression-type connector.
3. Class 1 Terminations: Modular type, furnished as a kit, with stress-relief shield terminator; multiple-wet-process, porcelain, insulator modules; shield ground strap; and compression-type connector.

2.6 SEPARABLE INSULATED CONNECTORS

A. Description: Modular system, complying with IEEE 386, with disconnecting, single-pole, cable terminators and with matching, stationary, plug-in, dead-front terminals designed for cable voltage and for sealing against moisture.

B. Terminations at Distribution Points: Modular type, consisting of terminators installed on cables and modular, dead-front, terminal junctions for interconnecting cables.

C. Load-Break Cable Terminators: Elbow-type units with 200-A-load make/break and continuous-current rating; coordinated with insulation diameter, conductor size, and material of cable being terminated. Include test point on terminator body that is capacitance coupled.

D. Dead-Break Cable Terminators: Elbow-type unit with 600-A continuous-current rating; designed for de-energized disconnecting and connecting; coordinated with insulation diameter, conductor size, and material of cable being terminated. Include test point on terminator body that is capacitance coupled.

E. Dead-Front Terminal Junctions: Modular bracket-mounted groups of dead-front stationary terminals that mate and match with above cable terminators. Two-, three-, or four-terminal units as indicated, with fully rated, insulated, watertight conductor connection between terminals and complete with grounding lug, manufacturer's standard accessory stands, stainless-steel mounting brackets, and attaching hardware.

   1. Protective Cap: Insulating, electrostatic-shielding, water-sealing cap with drain wire.

   2. Portable Feed-Through Accessory: Two-terminal, dead-front junction arranged for removable mounting on accessory stand of stationary terminal junction.

   3. Grounding Kit: Jumpered elbows, portable feed-through accessory units, protective caps, test rods suitable for concurrently grounding three phases of feeders, and carrying case.

   4. Standoff Insulator: Portable, single dead-front terminal for removable mounting on accessory stand of stationary terminal junction. Insulators suitable for fully insulated isolation of energized cable-elbow terminator.

F. Test-Point Fault Indicators: Applicable current-trip ratings and arranged for installation in test points of load-break separable connectors, and complete with self-resetting indicators capable of being installed with shotgun hot stick and tested with test tool.

G. Tool Set: Shotgun hot stick with energized terminal indicator, fault-indicator test tool, and carrying case.

2.7 SPLICE KITS

A. Splice Kits: Comply with IEEE 404; type as recommended by cable or splicing kit manufacturer for the application.

B. Splicing Products: As recommended, in writing, by splicing kit manufacturer for specific sizes, materials, ratings, and configurations of cable conductors. Include all components required for complete splice, with detailed instructions.

1. Combination tape and cold-shrink-rubber sleeve kit with rejacketing by cast-epoxy-resin encasement or other waterproof, abrasion-resistant material.
2. Heat-shrink splicing kit of uniform, cross-section, polymeric construction with outer heat-shrink jacket.
3. Premolded, cold-shrink-rubber, in-line splicing kit.
4. Premolded, EPDM splicing body kit with cable joint sealed by interference fit of mating parts and cable.
5. Separable multiway splice system with all components for the required splice configuration.

2.8 MEDIUM-VOLTAGE TAPES

A. Ethylene/propylene rubber-based, 30-mil splicing tape, rated for 130 deg C operation. Minimum 3/4 inch wide.

B. Silicone rubber-based, 12-mil self-fusing tape, rated for 130 deg C operation. Minimum 1-1/2 inches (38 mm) wide.

C. Insulating-putty, 125-mil elastic filler tape. Minimum 1-1/2 inches wide.

2.9 ARC-PROOFING MATERIALS

A. Tape for First Course on Metal Objects: 10-mil-thick, corrosion-protective, moisture-resistant, PVC pipe-wrapping tape.

B. Arc-Proofing Tape: Fireproof tape, flexible, conformable, intumescent to 0.3 inch thick, and compatible with cable jacket.

2.10 FAULT INDICATORS

A. Indicators: Automatically reset fault indicator with inrush restraint feature, arranged to clamp to cable sheath and provide a display after a fault has occurred in cable. Instrument shall not be affected by heat, moisture, and corrosive conditions and shall be recommended by manufacturer for installation conditions.

B. Resetting Tool: Designed for use with fault indicators, with moisture-resistant storage and carrying case.

2.11 SOURCE QUALITY CONTROL

A. Test and inspect cables according to ICEA S-97-682 before shipping.

B. Test strand-filled cables for water-penetration resistance according to ICEA T-31-610, using a test pressure of 5 psig.

PART 3 - EXECUTION

3.1 INSTALLATION

A. Install cables according to IEEE 576.

B. Proof conduits prior to conductor installation by passing a wire brush mandrel and then a rubber duct swab through the conduit. Separate the wire brush and the rubber swab by 48 to 72 inches on the pull rope.

1. Wire Brush Mandrel: Consists of a length of brush approximately the size of the conduit inner diameter with stiff steel bristles and an eye on each end for attaching the pull ropes. If an obstruction is felt, pull the brush back and forth repeatedly to break up the obstruction.

2. Rubber Duct Swab: Consists of a series of rubber discs approximately the size of the conduit inner diameter on a length of steel cable with an eye on each end for attaching the pull ropes. Pull the rubber duct swab through the duct to extract loose debris from the duct.

C. Pull Conductors: Do not exceed manufacturer's recommended maximum pulling tensions and sidewall pressure values.

1. Where necessary, use manufacturer-approved pulling compound or lubricant that does not deteriorate conductor or insulation.

2. Use pulling means, including fish tape, cable, rope, and basket-weave cable grips, that do not damage cables and raceways. Do not use rope hitches for pulling attachment to cable.

3. Use pull-in guides, cable feeders, and draw-in protectors as required to protect cables during installation.

4. Do not pull cables with ends unsealed. Seal cable ends with rubber tape.

D. Install exposed cables parallel and perpendicular to surfaces of exposed structural members and follow surface contours where possible.

E. Install direct-buried cables on leveled and tamped bed of 3-inch-thick, clean sand. Separate cables crossing other cables or piping by a minimum of 2 inches of tamped earth, plus an additional 2 inches of sand. Install permanent markers at ends of cable runs, changes in direction, and buried splices.

F. Install "buried-cable" warning tape 12 inches above duct banks and conduits protecting cables.

G. In manholes, handholes, pull boxes, junction boxes, and cable vaults, train cables around walls by the longest route from entry to exit; support cables at intervals adequate to prevent sag.

H. Install sufficient cable length to remove cable ends under pulling grips. Remove length of conductor damaged during pulling.

I. Install cable splices at pull points and elsewhere as indicated; use standard kits.

J. Install terminations at ends of conductors, and seal multiconductor cable ends with standard kits.

K. Install separable insulated-connector components as follows:

1. Protective Cap: At each terminal junction, with one on each terminal to which no feeder is indicated to be connected.

2. Portable Feed-Through Accessory: At each terminal junction, with one on each terminal.

3. Standoff Insulator: At each terminal junction, with one on each terminal.

L. Arc Proofing: Unless otherwise indicated, arc proof all medium-voltage cable at all locations where cable is not protected by conduit, , direct burial, or termination materials. In addition to arc-proofing tape manufacturer's written instructions, apply arc proofing as follows:

1. Clean cable sheath.

2. Wrap metallic cable components with 10-mil pipe-wrapping tape.

3. Smooth surface contours with electrical insulation putty.

4. Apply arc-proofing tape in one half-lapped layer with coated side toward cable.

5. Band arc-proofing tape with two layers of 1-inch-wide half-lapped, adhesive, glass-cloth tape at each end of the arc-proof tape.

M. Seal around cables passing through fire-rated elements according to Section 07 84 00 "Firestopping."

N. Install fault indicators on each phase where indicated.

O. Ground shields of shielded cable at terminations, splices, and separable insulated connectors. Ground metal bodies of terminators, splices, cable and separable insulated-connector fittings, and hardware.

P. Identify cables according to NFPA 70 and ANSI 13.1 "Identification for Electrical Systems." Identify phase and circuit number of each conductor at each splice, termination, pull point, and junction box. Arrange identification so that it is unnecessary to move the cable or conductor to read the identification.

3.2 FIELD QUALITY CONTROL

A. Testing Agency: Engage a qualified testing agency to perform tests and inspections.

B. Perform the following tests and inspections:

1. Perform each visual and mechanical inspection and electrical test stated in NETA ATS. Certify compliance with test parameters.

2. After installing medium-voltage cables and before electrical circuitry has been energized, test for compliance with requirements.

C. Medium-voltage cables will be considered defective if they do not pass tests and inspections.

D. Prepare test and inspection reports.

END OF SECTION 26 05 13.19

SECTION 26 05 19 - LOW-VOLTAGE ELECTRICAL POWER CONDUCTORS AND CABLES

PART 1 - GENERAL

1.1 RELATED DOCUMENTS

A. Drawings and general provisions of the Trade Contract, including General and Supplementary Conditions and Division 01 Specification Sections, apply to this Section.

1.2 SUMMARY

A. This Section includes the following:

1. Building wires and cables rated 600 V and less.
2. Connectors, splices, and terminations rated 600 V and less.

B. Related Sections include the following:

1. Division 27 Section "Communications Horizontal Cabling" for cabling used for voice and data circuits.

1.3 DEFINITIONS

A. EPDM: Ethylene-propylene-diene terpolymer rubber.

B. NBR: Acrylonitrile-butadiene rubber.

1.4 ACTION SUBMITTALS

A. Product Data: For each type of product indicated.

1.5 INFORMATIONAL SUBMITTALS

A. Qualification Data: For testing agency.

B. Field quality-control test reports.

1.6 QUALITY ASSURANCE

A. Electrical Components, Devices, and Accessories: Listed and labeled as defined in NFPA 70, Article 100, by a testing agency acceptable to authorities having jurisdiction, and marked for intended use.

B. Comply with NFPA 70.

PART 2 - PRODUCTS

2.1 CONDUCTORS AND CABLES

A. Available Manufacturers: Subject to compliance with requirements, manufacturers offering products that may be incorporated into the Work include, but are not limited to, the following:

1. Alpha Wire Company.
2. American Insulated Wire Corp.; a Leviton Company.
3. Belden Inc.
4. Cerro Wire LLC.
5. General Cable Corporation.
6. Senator Wire & Cable Company.
7. Southwire Company.

B. Copper Conductors: Comply with NEMA WC 70/ICEA S-95-658.

C. Conductor Insulation: Comply with NEMA WC 70/ICEA S-95-65 and type RHW-3.

D. Multiconductor Cable: Comply with NEMA WC 70 for metal-clad cable, Type MC with ground wire.

E. MC Metal Clad Cable: 90° C dry THHN copper conductors, maximum voltage 600V. Include green insulated grounding conductor. Steel or aluminum armor.

2.2 CONNECTORS AND SPLICES

A. Available Manufacturers: Subject to compliance with requirements, manufacturers offering products that may be incorporated into the Work include, but are not limited to, the following:

1. AFC Cable Systems, Inc.
2. Hubbell Power Systems, Inc.
3. O-Z/Gedney; EGS Electrical Group LLC.
4. 3M; Electrical Products Division.
5. Tyco Electronics Corp.

B. Description: Factory-fabricated connectors and splices of size, ampacity rating, material, type, and class for application and service indicated.

PART 3 - EXECUTION

3.1 CONDUCTOR MATERIAL APPLICATIONS

A. Feeders: Copper. Solid for No. 10 AWG and smaller; stranded for No. 8 AWG and larger.

B. Branch Circuits: Copper. Solid for No. 10 AWG and smaller; stranded for No. 8 AWG and larger.

3.2 CONDUCTOR INSULATION AND MULTICONDUCTOR CABLE APPLICATIONS AND WIRING METHODS

A. Service Entrance: Type THWN, single conductors in raceway.

B. Feeders: Type THHN-THWN, single conductors in raceway.

C. Exposed Branch Circuits: Type THHN-THWN, single conductors in raceway.

D. Branch Circuits Concealed above Accessible Ceilings and in Wallsor Partitions: Type THHN-THWN, single conductors in raceway or Metal-clad cable, Type MC.

E. Cord Drops and Portable Appliance Connections: Type SO, hard service cord with stainless-steel, wire-mesh, strain relief device at terminations to suit application.

F. Class 1 Control Circuits: Type THHN-THWN, in raceway.

G. Class 2 Control Circuits: Type THHN-THWN, in raceway.

H. Feeders and branch circuits underground in conduits or duct banks and outside the perimeter of the building: type RHW-2 single conductors in raceway.

3.3 INSTALLATION OF CONDUCTORS AND CABLES

A. Conceal cables in finished walls, ceilings, and floors, unless otherwise indicated.

B. Type MC cable above accessible ceilings:

1. Not more than 6 feet length as final connection to a luminaire.
2. May be spliced in overhead boxes, dropped into and routed concealed in walls to serve receptacles and other wall-mounted devices. May be routed horizontally, concealed in walls to serve other receptacles and wall-mounted devices.

C. Type MC cables shall not be used as feeders, homerun branch circuits, or branch circuits between boxes above accessible ceilings. Cable shall not be routed exposed and/or surface mounted.

D. Use manufacturer-approved pulling compound or lubricant where necessary; compound used must not deteriorate conductor or insulation. Do not exceed manufacturer's recommended maximum pulling tensions and sidewall pressure values.

E. Use pulling means, including fish tape, cable, rope, and basket-weave wire/cable grips, that will not damage cables or raceway.

F. Install exposed cables parallel and perpendicular to surfaces of exposed structural members, and follow surface contours where possible.

G. Support cables according to Division 26 Section "Hangers and Supports for Electrical Systems."

H. Identify and color-code conductors and cables according to Division 26 Section "Identification for Electrical Systems."

3.4 CONNECTIONS

A. Tighten electrical connectors and terminals according to manufacturer's published torque-tightening values. If manufacturer's torque values are not indicated, use those specified in UL 486A and UL 486B.

B. Make splices and taps that are compatible with conductor material and that possess equivalent or better mechanical strength and insulation ratings than unspliced conductors.

1. Use oxide inhibitor in each splice and tap conductor for aluminum conductors.

C. Wiring at Outlets: Install conductor at each outlet, with at least 6 inches (150 mm) of slack.

3.5 SLEEVE AND SLEEVE-SEAL INSTALLATION FOR ELECTRICAL PENETRATIONS

A. Install sleeves and sleeve seals at penetrations of exterior floor and wall assemblies. Comply with requirements in Division 26 Section ""Common Work Results for Electrical."

3.6 FIRESTOPPING

A. Apply firestopping to electrical penetrations of fire-rated floor and wall assemblies to restore original fire-resistance rating of assembly according to Division 07 Section "Firestopping."

3.7 FIELD QUALITY CONTROL

A. Perform tests and inspections and prepare test reports.

B. Tests and Inspections:

1. After installing conductors and cables and before electrical circuitry has been energized, test service entrance and feeder conductors, and conductors feeding the following critical equipment and services for compliance with requirements.
2. Perform each visual and mechanical inspection and electrical test stated in NETA Acceptance Testing Specification. Certify compliance with test parameters.

C. Test Reports: Prepare a written report to record the following:

1. Test procedures used.
2. Test results that comply with requirements.
3. Test results that do not comply with requirements and corrective action taken to achieve compliance with requirements.

D. Remove and replace malfunctioning units and retest as specified above.

END OF SECTION 26 05 19

SECTION 26 05 26 - GROUNDING AND BONDING FOR ELECTRICAL SYSTEMS

PART 1 - GENERAL

1.1 RELATED DOCUMENTS

A. Drawings and general provisions of the Trade Contract, including General and Supplementary Conditions and Division 01 Specification Sections, apply to this Section.

1.2 SUMMARY

A. Section Includes: Grounding systems and equipment.

B. Section includes grounding systems and equipment, plus the following special applications:

1. Underground distribution grounding.
2. Ground bonding common with lightning protection system.

1.3 ACTION SUBMITTALS

A. Product Data: For each type of product indicated.

1.4 INFORMATIONAL SUBMITTALS

A. Informational Submittals: Plans showing dimensioned as-built locations of grounding features specified in "Field Quality Control" Article, including the following:

1. Test wells.
2. Ground rods.
3. Ground rings.
4. Grounding arrangements and connections for separately derived systems.

B. Field quality-control reports.

1.5 CLOSEOUT SUBMITTALS

A. Operation and Maintenance Data: For grounding to include in emergency, operation, and maintenance manuals. In addition to items specified in Division 01 Section "Operation and Maintenance Data," include the following:

1. Instructions for periodic testing and inspection of grounding features at test wells, ground rings and grounding connections for separately derived systems based on NFPA 70B.

a. Tests shall determine if ground-resistance or impedance values remain within specified maximums, and instructions shall recommend corrective action if values do not.
b. Include recommended testing intervals.

1.6 QUALITY ASSURANCE

A. Electrical Components, Devices, and Accessories: Listed and labeled as defined in NFPA 70, by a qualified testing agency, and marked for intended location and application.

B. Comply with UL 467 for grounding and bonding materials and equipment.

PART 2 - PRODUCTS

2.1 CONDUCTORS

A. Insulated Conductors: Copper or tinned-copper wire or cable insulated for 600 V unless otherwise required by applicable Code or authorities having jurisdiction.

B. Bare Copper Conductors:

1. Solid Conductors: ASTM B 3.
2. Stranded Conductors: ASTM B 8.
3. Tinned Conductors: ASTM B 33.
4. Bonding Cable: 28 kcmil, 14 strands of No. 17 AWG conductor, 1/4 inch (6 mm) in diameter.
5. Bonding Conductor: No. 4 or No. 6 AWG, stranded conductor.
6. Bonding Jumper: Copper tape, braided conductors terminated with copper ferrules; 1-5/8 inches (41 mm) wide and 1/16 inch (1.6 mm) thick.
7. Tinned Bonding Jumper: Tinned-copper tape, braided conductors terminated with copper ferrules; 1-5/8 inches (41 mm) wide and 1/16 inch (1.6 mm) thick.

C. Grounding Bus: Predrilled rectangular bars of annealed copper, 1/4 by 4 inches (6.3 by 100 mm) in cross section, with 9/32-inch (7.14-mm) holes spaced 1-1/8 inches (28 mm) apart. Stand-off insulators for mounting shall comply with UL 891 for use in switchboards, 600 V. Lexan or PVC, impulse tested at 5000 V.

2.2 CONNECTORS

A. Listed and labeled by an NRTL acceptable to authorities having jurisdiction for applications in which used and for specific types, sizes, and combinations of conductors and other items connected.

B. Bolted Connectors for Conductors and Pipes: Copper or copper alloy, pressure type with at least two bolts.

1. Pipe Connectors: Clamp type, sized for pipe.

C. Welded Connectors: Exothermic-welding kits of types recommended by kit manufacturer for materials being joined and installation conditions.

D. Bus-bar Connectors: Mechanical type, cast silicon bronze, solderless compression-type wire terminals, and long-barrel, two-bolt connection to ground bus bar.

2.3 GROUNDING ELECTRODES

A. Ground Rods: Copper-clad steel, sectional type; 3/4 inch by 10 feet (19 mm by 3 m) in diameter.

PART 3 - EXECUTION

3.1 APPLICATIONS

A. Conductors: Install solid conductor for No. 8 AWG and smaller, and stranded conductors for No. 6 AWG and larger unless otherwise indicated.

B. Underground Grounding Conductors: Install bare tinned-copper conductor, No. 3/0 AWG minimum.

1. Bury at least 24 inches (600 mm) below grade.

C. Ground Bus: Install in electrical and telephone equipment rooms, in rooms housing service equipment, and elsewhere as indicated.

1. Install bus on insulated spacers 2 inches (50 mm) minimum from wall, 6 inches (150 mm) above finished floor unless otherwise indicated.

2. Where indicated on both sides of doorways, route bus up to top of door frame, across top of doorway, and down to specified height above floor; connect to horizontal bus.

D. Conductor Terminations and Connections:

1. Pipe and Equipment Grounding Conductor Terminations: Bolted connectors.

2. Underground Connections: Welded connectors except at test wells and as otherwise indicated.

3. Connections to Ground Rods at Test Wells: Bolted connectors.

4. Connections to Structural Steel: Welded connectors.

3.2 GROUNDING UNDERGROUND DISTRIBUTION SYSTEM COMPONENTS

A. Comply with IEEE C2 grounding requirements.

B. Pad-Mounted Transformers and Switches: Install two ground rods and ground ring around the pad. Ground pad-mounted equipment and noncurrent-carrying metal items associated with

substations by connecting them to underground cable and grounding electrodes. Install tinned-copper conductor not less than No. 3/0 AWG for ground ring and for taps to equipment grounding terminals. Bury ground ring not less than 6 inches (150 mm) from the foundation.

3.3 EQUIPMENT GROUNDING

A. Install insulated equipment grounding conductors with all feeders and branch circuits.

B. Air-Duct Equipment Circuits: Install insulated equipment grounding conductor to duct-mounted electrical devices operating at 120 V and more, including air cleaners, heaters, dampers, humidifiers, and other duct electrical equipment. Bond conductor to each unit and to air duct and connected metallic piping.

C. Water Heater, Heat-Tracing, and Antifrost Heating Cables: Install a separate insulated equipment grounding conductor to each electric water heater and heat-tracing cable. Bond conductor to heater units, piping, connected equipment, and components.

D. Signal and Communication Equipment: In addition to grounding and bonding required by NFPA 70, provide a separate grounding system complying with requirements in TIA/ATIS J-STD-607-A.

1. For telephone, alarm, voice and data, and other communication equipment, provide insulated grounding conductor in raceway sized per communications drawings requirements, from grounding electrode system to each service location, terminal cabinet, wiring closet, and central equipment location.

2. Service and Central Equipment Locations and Wiring Closets: Terminate grounding conductor on a 1/4-by-4-by-24-inch (6.3-by-100-by-600-mm) grounding bus.

3. Terminal Cabinets: Terminate grounding conductor on cabinet grounding terminal.

3.4 INSTALLATION

A. Grounding Conductors: Route along shortest and straightest paths possible unless otherwise indicated or required by Code. Avoid obstructing access or placing conductors where they may be subjected to strain, impact, or damage.

B. Ground Bonding Common with Lightning Protection System: Comply with NFPA 780 and UL 96 when interconnecting with lightning protection system. Bond electrical power system ground directly to lightning protection system grounding conductor at closest point to electrical service grounding electrode. Use bonding conductor sized same as system grounding electrode conductor, and install in conduit.

C. Ground Rods: Drive rods until tops are 2 inches (50 mm) below finished floor or final grade unless otherwise indicated.

1. Interconnect ground rods with grounding electrode conductor below grade and as otherwise indicated. Make connections without exposing steel or damaging coating if any.

D. Test Wells: Ground rod driven through drilled hole in bottom of handhole. Handholes are specified in Division 26 Section " Raceways and Boxes for Electrical Systems," and shall be at least 12 inches (300 mm) deep, with cover.

1. Test Wells: Install at least one test well for each service unless otherwise indicated. Install at the ground rod electrically closest to service entrance. Set top of test well flush with finished grade or floor.

E. Bonding Straps and Jumpers: Install in locations accessible for inspection and maintenance except where routed through short lengths of conduit.

1. Bonding to Structure: Bond straps directly to basic structure, taking care not to penetrate any adjacent parts.

2. Bonding to Equipment Mounted on Vibration Isolation Hangers and Supports: Install bonding so vibration is not transmitted to rigidly mounted equipment.

3. Use exothermic-welded connectors for outdoor locations; if a disconnect-type connection is required, use a bolted clamp.

F. Grounding and Bonding for Piping:

1. Metal Water Service Pipe: Install insulated copper grounding conductors, in conduit, from building's main service equipment, or grounding bus, to main metal water service entrances to building. Connect grounding conductors to main metal water service pipes; use a bolted clamp connector or bolt a lug-type connector to a pipe flange by using one of the lug bolts of the flange. Where a dielectric main water fitting is installed, connect grounding conductor on street side of fitting. Bond metal grounding conductor conduit or sleeve to conductor at each end.

2. Water Meter Piping: Use braided-type bonding jumpers to electrically bypass water meters. Connect to pipe with a bolted connector.

3. Bond each aboveground portion of gas piping system downstream from equipment shutoff valve.

G. Bonding Interior Metal Ducts: Bond metal air ducts to equipment grounding conductors of associated fans, blowers, electric heaters, and air cleaners. Install bonding jumper to bond across flexible duct connections to achieve continuity.

H. Grounding for Steel Building Structure: Install a driven ground rod at base of each corner column and at intermediate exterior columns at distances not more than 60 feet (18 m) apart.

I. Ground Ring: Install a grounding conductor, electrically connected to each building structure ground rod and to each indicated item, extending around the perimeter of building.

1. Install tinned-copper conductor not less than No. 3/0 AWG for ground ring and for taps to building steel.

2. Bury ground ring not less than 24 inches (600 mm) from building's foundation.

J. Ufer Ground (Concrete-Encased Grounding Electrode): Fabricate according to NFPA 70; use a minimum of 20 feet (6 m) of continuous reinforcing steel.

3.5 LABELING

A. Comply with requirements in Division 26 Section "Identification for Electrical Systems" Article for instruction signs. The label or its text shall be green.

B. Install labels at the telecommunications bonding conductor and grounding equalizer and at the grounding electrode conductor where exposed.

1. Label Text: "If this connector or cable is loose or if it must be removed for any reason, notify the facility manager."

3.6 FIELD QUALITY CONTROL

A. Perform tests and inspections.

1. Manufacturer's Field Service: Engage a factory-authorized service representative to inspect components, assemblies, and equipment installations, including connections, and to assist in testing.

B. Tests and Inspections:

1. After installing grounding system but before permanent electrical circuits have been energized, test for compliance with requirements.

2. Inspect physical and mechanical condition. Verify tightness of accessible, bolted, electrical connections with a calibrated torque wrench according to manufacturer's written instructions.

3. Test completed grounding system at each location where a maximum ground-resistance level is specified, at service disconnect enclosure grounding terminal, at ground test wells, and at individual ground rods. Make tests at ground rods before any conductors are connected.

a. Measure ground resistance no fewer than two full days after last trace of precipitation and without soil being moistened by any means other than natural drainage or seepage and without chemical treatment or other artificial means of reducing natural ground resistance.

b. Perform tests by fall-of-potential method according to IEEE 81.

4. Prepare dimensioned Drawings locating each test well, ground rod and ground-rod assembly, and other grounding electrodes. Identify each by letter in alphabetical order, and key to the record of tests and observations. Include the number of rods driven and their depth at each location, and include observations of weather and other phenomena that may affect test results. Describe measures taken to improve test results.

C. Grounding system will be considered defective if it does not pass tests and inspections.

D. Prepare test and inspection reports.

E. Report measured ground resistances that exceed the following values:

1. Power and Lighting Equipment or System with Capacity of 500 to 1000 kVA: 5 ohms.

2. Substations and Pad-Mounted Equipment: 5 ohms.

F. Excessive Ground Resistance: If resistance to ground exceeds specified values, notify CTDOT PM promptly and include recommendations to reduce ground resistance.

END OF SECTION 26 05 26

SECTION 26 05 29 - HANGERS AND SUPPORTS FOR ELECTRICAL SYSTEMS

PART 1 - GENERAL

1.1 RELATED DOCUMENTS

A. Drawings and general provisions of the Trade Contract, including General and Supplementary Conditions and Division 01 Specification Sections, apply to this Section.

1.2 SUMMARY

A. This Section includes the following:

1. Hangers and supports for electrical equipment and systems.

2. Construction requirements for concrete bases.

B. Related Sections include the following:

1. Division 26 Section "Vibration and Seismic Controls for Electrical Systems" for products and installation requirements necessary for compliance with seismic criteria.

1.3 DEFINITIONS

A. EMT: Electrical metallic tubing.

B. IMC: Intermediate metal conduit.

C. RMC: Rigid metal conduit.

1.4 PERFORMANCE REQUIREMENTS

A. Design supports for multiple raceways capable of supporting combined weight of supported systems and its contents.

1.5 QUALITY ASSURANCE

A. Welding: Qualify procedures and personnel according to AWS D1.1/D1.1M, "Structural Welding Code - Steel."

B. Comply with NFPA 70.

1.6 COORDINATION

A. Coordinate size and location of concrete bases. Cast anchor-bolt inserts into bases. Concrete, reinforcement, and formwork requirements are specified in Division 03.

B. Coordinate installation of roof curbs, equipment supports, and roof penetrations. These items are specified in Division 07 Section “Roof Accessories”.

PART 2 - PRODUCTS

2.1 SUPPORT, ANCHORAGE, AND ATTACHMENT COMPONENTS

A. Steel Slotted Support Systems: Comply with MFMA-4, factory-fabricated components for field assembly.

1. Available Manufacturers: Subject to compliance with requirements, manufacturers offering products that may be incorporated into the Work include, but are not limited to, the following:

a. Allied Tube & Conduit.
b. Cooper B-Line, Inc.; a division of Cooper Industries.
c. ERICO International Corporation.
d. GS Metals Corp.
e. Thomas & Betts Corporation.
f. Unistrut; Tyco International, Ltd.
g. Wesanco, Inc.

2. Metallic Coatings: Hot-dip galvanized after fabrication and applied according to MFMA-4.

3. Nonmetallic Coatings: Manufacturer's standard PVC, polyurethane, or polyester coating applied according to MFMA-4.

4. Painted Coatings: Manufacturer's standard painted coating applied according to MFMA-4.

5. Channel Dimensions: Selected for applicable load criteria.

B. Raceway and Cable Supports: As described in NECA 1 and NECA 101.

C. Conduit and Cable Support Devices: Steel hangers, clamps, and associated fittings, designed for types and sizes of raceway or cable to be supported.

D. Support for Conductors in Vertical Conduit: Factory-fabricated assembly consisting of threaded body and insulating wedging plug or plugs for non-armored electrical conductors or cables in riser conduits. Plugs shall have number, size, and shape of conductor gripping pieces as required to suit individual conductors or cables supported. Body shall be malleable iron.

E. Structural Steel for Fabricated Supports and Restraints: ASTM A 36/A 36M, steel plates, shapes, and bars; black and galvanized.

F. Mounting, Anchoring, and Attachment Components: Items for fastening electrical items or their supports to building surfaces include the following:

1. Powder-Actuated Fasteners: Threaded-steel stud, for use in hardened portland cement concrete, steel, or wood, with tension, shear, and pullout capacities appropriate for supported loads and building materials where used.

   a. Available Manufacturers: Subject to compliance with requirements, manufacturers offering products that may be incorporated into the Work include, but are not limited to, the following:

      1) Hilti Inc.
      2) ITW Ramset/Red Head; a division of Illinois Tool Works, Inc.
      3) MKT Fastening, LLC.
      4) Simpson Strong-Tie Co., Inc.; Masterset Fastening Systems Unit.

2. Mechanical-Expansion Anchors: Insert-wedge-type, zinc-coated steel, for use in hardened portland cement concrete with tension, shear, and pullout capacities appropriate for supported loads and building materials in which used.

   a. Available Manufacturers: Subject to compliance with requirements, manufacturers offering products that may be incorporated into the Work include, but are not limited to, the following:

      1) Cooper B-Line, Inc.; a division of Cooper Industries.
      2) Empire Tool and Manufacturing Co., Inc.
      3) Hilti Inc.
      4) ITW Ramset/Red Head; a division of Illinois Tool Works, Inc.
      5) MKT Fastening, LLC.

3. Concrete Inserts: Steel or malleable-iron, slotted support system units similar to MSS Type 18; complying with MFMA-4 or MSS SP-58.

4. Clamps for Attachment to Steel Structural Elements: MSS SP-58, type suitable for attached structural element.

5. Through Bolts: Structural type, hex head, and high strength. Comply with ASTM A 325.

6. Toggle Bolts: All-steel springhead type.

7. Hanger Rods: Threaded steel.

2.2 FABRICATED METAL EQUIPMENT SUPPORT ASSEMBLIES

A. Description: Welded or bolted, structural-steel shapes, shop or field fabricated to fit dimensions of supported equipment.

B. Materials: Comply with requirements in Division 05 Section "Metal Fabrications" for steel shapes and plates.

PART 3 - EXECUTION

3.1 APPLICATION

A. Comply with NECA 1 and NECA 101 for application of hangers and supports for electrical equipment and systems except if requirements in this Section are stricter.

B. Maximum Support Spacing and Minimum Hanger Rod Size for Raceway: Space supports for EMT, IMC, and RMC as required by NFPA 70. Minimum rod size shall be 1/4 inch (6 mm) in diameter.

C. Multiple Raceways or Cables: Install trapeze-type supports fabricated with steel slotted or other support system, sized so capacity can be increased by at least 25 percent in future without exceeding specified design load limits.

1. Secure raceways and cables to these supports with single-bolt conduit clamps using spring friction action for retention in support channel.

D. Spring-steel clamps designed for supporting single conduits without bolts may be used for 1-1/2-inch (38-mm) and smaller raceways serving branch circuits and communication systems above suspended ceilings and for fastening raceways to trapeze supports.

3.2 SUPPORT INSTALLATION

A. Comply with NECA 1 and NECA 101 for installation requirements except as specified in this Article.

B. Raceway Support Methods: In addition to methods described in NECA 1,EMT, IMC, and RMC may be supported by openings through structure members, as permitted in NFPA 70.

C. Strength of Support Assemblies: Where not indicated, select sizes of components so strength will be adequate to carry present and future static loads within specified loading limits. Minimum static design load used for strength determination shall be weight of supported components plus 200 lb (90 kg).

D. Mounting and Anchorage of Surface-Mounted Equipment and Components: Anchor and fasten electrical items and their supports to building structural elements by the following methods unless otherwise indicated by code:

1. To Wood: Fasten with lag screws or through bolts.

2. To New Concrete: Bolt to concrete inserts.

3. To Masonry: Approved toggle-type bolts on hollow masonry units and expansion anchor fasteners on solid masonry units.

4. To Existing Concrete: Expansion anchor fasteners.

5. Instead of expansion anchors, powder-actuated driven threaded studs provided with lock washers and nuts may be used in existing standard-weight concrete 4 inches (100 mm)

thick or greater. Do not use for anchorage to lightweight-aggregate concrete or for slabs less than 4 inches (100 mm) thick.

6. To Steel: Beam clamps (MSS Type 19, 21, 23, 25, or 27) complying with MSS SP-69.

7. To Light Steel: Sheet metal screws.

8. Items Mounted on Hollow Walls and Nonstructural Building Surfaces: Mount cabinets, panelboards, disconnect switches, control enclosures, pull and junction boxes, transformers, and other devices on slotted-channel racks attached to substrate.

E. Drill holes for expansion anchors in concrete at locations and to depths that avoid reinforcing bars.

3.3 INSTALLATION OF FABRICATED METAL SUPPORTS

A. Comply with installation requirements in Division 05 Section "Metal Fabrications" for site-fabricated metal supports.

B. Cut, fit, and place miscellaneous metal supports accurately in location, alignment, and elevation to support and anchor electrical materials and equipment.

C. Field Welding: Comply with AWS D1.1/D1.1M.

3.4 CONCRETE BASES

A. Construct concrete bases of dimensions indicated but not less than 4 inches (100 mm) larger in both directions than supported unit, and so anchors will be a minimum of 10 bolt diameters from edge of the base.

B. Use 3000-psi (20.7-MPa), 28-day compressive-strength concrete. Concrete materials, reinforcement, and placement requirements are specified in Division 03 Section "Cast-in-Place Concrete."

C. Anchor equipment to concrete base.

1. Place and secure anchorage devices. Use supported equipment manufacturer's setting drawings, templates, diagrams, instructions, and directions furnished with items to be embedded.

2. Install anchor bolts to elevations required for proper attachment to supported equipment.

3. Install anchor bolts according to anchor-bolt manufacturer's written instructions.

3.5 PAINTING

A. Touchup: Clean field welds and abraded areas of shop paint. Paint exposed areas immediately after erecting hangers and supports. Use same materials as used for shop painting. Comply with SSPC-PA 1 requirements for touching up field-painted surfaces.

1. Apply paint by brush or spray to provide minimum dry film thickness of 2.0 mils (0.05 mm).

B. Touchup: Comply with requirements in Division 09 painting Sections for cleaning and touchup painting of field welds, bolted connections, and abraded areas of shop paint on miscellaneous metal.

C. Galvanized Surfaces: Clean welds, bolted connections, and abraded areas and apply galvanizing-repair paint to comply with ASTM A 780.

END OF SECTION 26 05 29

SECTION 26 05 33 - RACEWAYS AND BOXES FOR ELECTRICAL SYSTEMS

PART 1 - GENERAL

1.1 RELATED DOCUMENTS

A. Drawings and general provisions of the Trade Contract, including General and Supplementary Conditions and Division 01 Specification Sections, apply to this Section.

1.2 SUMMARY

A. Section Includes:

1. Metal conduits, tubing, and fittings.
2. Nonmetallic conduits, tubing, and fittings.
3. Metal wireways and auxiliary gutters.
4. Surface raceways.
5. Boxes, enclosures, and cabinets.

B. Handholes and boxes for exterior underground cabling.

1.3 DEFINITIONS

A. EMT: Electrical metallic tubing.

B. FMC: Flexible metal conduit.

C. IMC: Intermediate metal conduit.

D. LFMC: Liquidtight flexible metal conduit.

E. RNC: Rigid nonmetallic conduit.

1.4 SUBMITTALS

A. Product Data: For surface raceways, wireways and fittings, floor boxes, hinged-cover enclosures, and cabinets.

B. Shop Drawings: For the following raceway components. Include plans, elevations, sections, details, and attachments to other work.

1. Custom enclosures and cabinets.
2. For handholes and boxes for underground wiring, including the following:

a. Duct entry provisions, including locations and duct sizes.
b. Frame and cover design.

c. Grounding details.
d. Dimensioned locations of cable rack inserts, and pulling-in and lifting irons.
e. Joint details.

C. Coordination Drawings: Conduit routing plans, drawn to scale, on which the following items are shown and coordinated with each other, based on input from installers of the items involved:

1. Structural members in the paths of conduit groups with common supports.
2. HVAC and plumbing items and architectural features in the paths of conduit groups with common supports.

D. Source quality-control test reports.

1.5 QUALITY ASSURANCE

A. Electrical Components, Devices, and Accessories: Listed and labeled as defined in NFPA 70, Article 100, by a testing agency acceptable to authorities having jurisdiction, and marked for intended use.

B. Comply with NFPA 70.

PART 2 - PRODUCTS

2.1 METAL CONDUIT AND TUBING

A. Available Manufacturers: Subject to compliance with requirements, manufacturers offering products that may be incorporated into the Work include, but are not limited to, the following:

1. AFC Cable Systems, Inc.
2. Alflex Inc.
3. Allied Tube & Conduit; a Tyco International Ltd. Co.
4. Anamet Electrical, Inc.; Anaconda Metal Hose.
5. Electri-Flex Co.
6. Manhattan/CDT/Cole-Flex.
7. Maverick Tube Corporation.
8. O-Z Gedney; a unit of General Signal.
9. Wheatland Tube Company.

B. Rigid Steel Conduit: ANSI C80.1.

C. IMC: ANSI C80.6.

D. PVC-Coated Steel Conduit: PVC-coated rigid steel conduit.

1. Comply with NEMA RN 1.
2. Coating Thickness: 0.040 inch (1 mm), minimum.

E. EMT: ANSI C80.3.

F. FMC: Zinc-coated steel.

G. LFMC: Flexible steel conduit with PVC jacket.

H. Fittings for Conduit (Including all Types and Flexible and Liquidtight), EMT, and Cable: NEMA FB 1; listed for type and size raceway with which used, and for application and environment in which installed.

1. Fittings for EMT: Steel, set-screw type.
2. Coating for Fittings for PVC-Coated Conduit: Minimum thickness, 0.040 inch (1 mm), with overlapping sleeves protecting threaded joints.

I. Joint Compound for Rigid Steel Conduit or IMC: Listed for use in cable connector assemblies, and compounded for use to lubricate and protect threaded raceway joints from corrosion and enhance their conductivity.

2.2 NONMETALLIC CONDUIT AND TUBING

A. Available Manufacturers: Subject to compliance with requirements, manufacturers offering products that may be incorporated into the Work include, but are not limited to, the following:

1. AFC Cable Systems, Inc.
2. Anamet Electrical, Inc.; Anaconda Metal Hose.
3. Arnco Corporation.
4. CANTEX Inc.
5. CertainTeed Corp.; Pipe & Plastics Group.
6. Condux International, Inc.
7. ElecSYS, Inc.
8. Electri-Flex Co.
9. Lamson & Sessions; Carlon Electrical Products.
10. Manhattan/CDT/Cole-Flex.
11. RACO; a Hubbell Company.
12. Thomas & Betts Corporation.

B. RNC: NEMA TC 2, Type EPC-80-PVC, unless otherwise indicated.

C. Fittings for RNC: NEMA TC 3; match to conduit or tubing type and material.

2.3 METAL WIREWAYS

A. Available Manufacturers: Subject to compliance with requirements, manufacturers offering products that may be incorporated into the Work include, but are not limited to, the following:

1. Cooper B-Line, Inc.
2. Hoffman.
3. Square D; Schneider Electric.

B. Description: Sheet metal sized and shaped as indicated, NEMA 250, Type 1, unless otherwise indicated.

C. Fittings and Accessories: Include couplings, offsets, elbows, expansion joints, adapters, hold-down straps, end caps, and other fittings to match and mate with wireways as required for complete system.

D. Wireway Covers: Screw-cover type.

E. Finish: Manufacturer's standard enamel finish.

2.4 SURFACE RACEWAYS

A. Surface Metal Raceways: Galvanized steel with snap-on covers. Manufacturer's standard enamel finish.

1. Available Manufacturers: Subject to compliance with requirements, manufacturers offering products that may be incorporated into the Work include, but are not limited to, the following:

   a. Thomas & Betts Corporation.
   b. Walker Systems, Inc.; Wiremold Company (The).
   c. Wiremold Company (The); Electrical Sales Division.

2.5 BOXES, ENCLOSURES, AND CABINETS

A. Available Manufacturers: Subject to compliance with requirements, manufacturers offering products that may be incorporated into the Work include, but are not limited to, the following:

1. Cooper Crouse-Hinds; Div. of Cooper Industries, Inc.
2. EGS/Appleton Electric.
3. Erickson Electrical Equipment Company.
4. Hoffman.
5. Hubbell Incorporated; Killark Electric Manufacturing Co. Division.
6. O-Z/Gedney; a unit of General Signal.
7. RACO; a Hubbell Company.
8. Robroy Industries, Inc.; Enclosure Division.
9. Scott Fetzer Co.; Adalet Division.
10. Spring City Electrical Manufacturing Company.
11. Thomas & Betts Corporation.
12. Walker Systems, Inc.; Wiremold Company (The).
13. Woodhead, Daniel Company; Woodhead Industries, Inc. Subsidiary.

B. Sheet Metal Outlet and Device Boxes: NEMA OS 1.

C. Cast-Metal Outlet and Device Boxes: NEMA FB 1, ferrous alloy, Type FD, with gasketed cover.

D. Metal Floor Boxes: Cast metal, fully adjustable, rectangular.

E. Small Sheet Metal Pull and Junction Boxes: NEMA OS 1.

F. Cast-Metal Access, Pull, and Junction Boxes: NEMA FB 1, galvanized, cast iron with gasketed cover.

G. Hinged-Cover Enclosures: NEMA 250, Type 1, with continuous-hinge cover with flush latch, unless otherwise indicated.

1. Metal Enclosures: Steel, finished inside and out with manufacturer's standard enamel.

H. Cabinets:

1. NEMA 250, Type 1, galvanized-steel box with removable interior panel and removable front, finished inside and out with manufacturer's standard enamel.
2. Hinged door in front cover with flush latch and concealed hinge.
3. Key latch to match panelboards.
4. Metal barriers to separate wiring of different systems and voltage.
5. Accessory feet where required for freestanding equipment.

2.6 HANDHOLES AND BOXES FOR EXTERIOR UNDERGROUND WIRING

A. General Requirements for Handholes and Boxes:

1. Boxes and handholes for use in underground systems shall be designed and identified as defined in NFPA 70, for intended location and application.
2. Boxes installed in wet areas shall be listed and labeled as defined in NFPA 70, by a qualified testing agency, and marked for intended location and application.

B. Polymer-Concrete Handholes and Boxes with Polymer-Concrete Cover: Molded of sand and aggregate, bound together with polymer resin, and reinforced with steel, fiberglass, or a combination of the two.

1. Manufacturers: Subject to compliance with requirements, available manufacturers offering products that may be incorporated into the Work include, but are not limited to, the following:

a. Armorcast Products Company.
b. Carson Industries LLC.
c. CDR Systems Corporation; Hubbell Power Systems.
d. NewBasis.
e. Oldcastle Precast, Inc.; Christy Concrete Products.
f. Synertech Moulded Products; a division of Oldcastle Precast, Inc.

2. Standard: Comply with SCTE 77.
3. Configuration: Designed for flush burial with open bottom unless otherwise indicated.
4. Cover: Weatherproof, secured by tamper-resistant locking devices and having structural load rating consistent with enclosure and handhole location.
5. Cover Finish: Nonskid finish shall have a minimum coefficient of friction of 0.50.
6. Cover Legend: Molded lettering, "ELECTRIC" or “GROUND” as applicable.
7. Conduit Entrance Provisions: Conduit-terminating fittings shall mate with entering ducts for secure, fixed installation in enclosure wall.

2.7 SOURCE QUALITY CONTROL FOR UNDERGROUND ENCLOSURES

A. Handhole and Pull-Box Prototype Test: Test prototypes of handholes and boxes for compliance with SCTE 77. Strength tests shall be for specified tier ratings of products supplied.

1. Tests of materials shall be performed by an independent testing agency.

PART 3 - EXECUTION

3.1 RACEWAY APPLICATION

A. Outdoors: Apply raceway products as specified below, unless otherwise indicated:

1. Exposed Conduit: Rigid steel conduit.
2. Concealed Conduit, Aboveground: Rigid steel conduit.
3. Underground Conduit: RNC, Type EPC-80-PVC, direct buried.
4. Connection to Vibrating Equipment (Including Transformers and Hydraulic, Pneumatic, Electric Solenoid, or Motor-Driven Equipment): LFMC.
5. Boxes and Enclosures, Aboveground: NEMA 250, Type 3R.

B. Comply with the following indoor applications, unless otherwise indicated:

1. Exposed: Rigid steel conduit. Includes raceways in the following locations:

a. Shops and Storage Rooms.
b. EMT may be run exposed within Mechanical, Electrical and Communications Rooms.

2. Concealed in Ceilings and Interior Walls and Partitions: EMT.
3. Connection to Vibrating Equipment (Including Transformers and Hydraulic, Pneumatic, Electric Solenoid, or Motor-Driven Equipment): FMC, except use LFMC in damp or wet locations.
4. Damp or Wet Locations: Rigid steel conduit.
5. Boxes and Enclosures: NEMA 250, Type 1, except use NEMA 250, Type 3R in damp or wet locations.

C. Minimum Raceway Size: 3/4-inch (21-mm) trade size, except for Communications/Data conduits which shall be 1-inch (27-mm) minimum.

D. Raceway Fittings: Compatible with raceways and suitable for use and location.

1. Rigid and Intermediate Steel Conduit: Use threaded rigid steel conduit fittings, unless otherwise indicated.
2. PVC Externally Coated, Rigid Steel Conduits: Use only fittings listed for use with that material. Patch and seal all joints, nicks, and scrapes in PVC coating after installing conduits and fittings. Use sealant recommended by fitting manufacturer.

3.2 INSTALLATION

A. Comply with NECA 1 for installation requirements applicable to products specified in Part 2 except where requirements on Drawings or in this Article are stricter.

B. Keep raceways at least 6 inches (150 mm) away from parallel runs of flues and steam or hot-water pipes. Install horizontal raceway runs above water and steam piping.

C. Complete raceway installation before starting conductor installation.

D. Support raceways as specified in Division 26 Section "Hangers and Supports for Electrical Systems."

E. Arrange stub-ups so curved portions of bends are not visible above the finished slab.

F. Install no more than the equivalent of three 90-degree bends in any conduit run except for communications conduits, for which fewer bends are allowed.

G. Conceal conduit and EMT within finished walls, ceilings, and floors, unless otherwise indicated.

H. Raceways Embedded in Slabs:

1. Run conduit larger than 1-inch (27-mm) trade size, parallel or at right angles to main reinforcement. Where at right angles to reinforcement, place conduit close to slab support.
2. Arrange raceways to cross building expansion joints at right angles with expansion fittings.
3. Change from RNC, Type EPC-80-PVC to rigid steel conduit or IMC before rising above the floor.

I. Threaded Conduit Joints, Exposed to Wet, Damp, Corrosive, or Outdoor Conditions: Apply listed compound to threads of raceway and fittings before making up joints. Follow compound manufacturer's written instructions.

J. Raceway Terminations at Locations Subject to Moisture or Vibration: Use insulating bushings to protect conductors, including conductors smaller than No. 4 AWG.

K. Install pull wires in empty raceways. Use polypropylene or monofilament plastic line with not less than 200-lb (90-kg) tensile strength. Leave at least 12 inches (300 mm) of slack at each end of pull wire.

L. Raceways for Communications Cable: Install raceways, metallic and as follows:

1. 1-Inch (25-mm) Trade Size and Larger: Install raceways in maximum lengths of 75 feet (23 m).
2. Install with a maximum of two 90-degree bends or equivalent for each length of raceway unless Drawings show stricter requirements. Separate lengths with pull or junction boxes or terminations at distribution frames or cabinets where necessary to comply with these requirements.

M. Install raceway sealing fittings at suitable, approved, and accessible locations and fill them with listed sealing compound. For concealed raceways, install each fitting in a flush steel box with a blank cover plate having a finish similar to that of adjacent plates or surfaces. Install raceway sealing fittings at the following points:

1. Where conduits pass from warm to cold locations, such as boundaries of refrigerated spaces.
2. Where otherwise required by NFPA 70.

N. Flexible Conduit Connections: Use maximum of 72 inches (1830 mm) of flexible conduit for recessed and semirecessed lighting fixtures, equipment subject to vibration, noise transmission, or movement; and for transformers and motors.

1. Use LFMC in damp or wet locations.

O. Recessed Boxes in Masonry Walls: Saw-cut opening for box in center of cell of masonry block, and install box flush with surface of wall.

P. Set metal floor boxes level and flush with finished floor surface.

Q. Set nonmetallic floor boxes level. Trim after installation to fit flush with finished floor surface.

3.3 INSTALLATION OF UNDERGROUND CONDUIT

A. All conduit ductbanks containing primary and secondary service feeders, emergency generator feeders, communications service feeders, communications and security system service feeders shall be concrete encased along entire lengths. Conduits for individual power branch circuits may be direct-buried where located directly beneath building slabs, or where routed in grade not subject to damage by vehicular traffic above.

B. Underground Conduit:

1. Install manufactured rigid steel conduit elbows for stub-ups at poles and equipment and at building entrances through floor.

   a. Couple steel conduits to ducts with adapters designed for this purpose, and encase coupling with 3 inches (75 mm) of concrete for a minimum of 12 inches (300 mm) on each side of the coupling.
   b. For stub-ups at equipment mounted on outdoor concrete bases and where conduits penetrate building foundations, extend steel conduit horizontally a minimum of 60 inches (1500 mm) from edge of foundation or equipment base. Install insulated grounding bushings on terminations at equipment.

2. Warning Planks: Bury warning planks approximately 12 inches (300 mm) above direct-buried conduits but a minimum of 6 inches (150 mm) below grade. Align planks along centerline of conduit.
3. Underground Warning Tape: Comply with requirements in Division 26 Section "Identification for Electrical Systems."

3.4 INSTALLATION OF UNDERGROUND HANDHOLES AND BOXES

A. Install handholes and boxes level and plumb and with orientation and depth coordinated with connecting conduits to minimize bends and deflections required for proper entrances.

B. Unless otherwise indicated, support units on a level bed of crushed stone or gravel, graded from 1/2-inch (12.5-mm) sieve to No. 4 (4.75-mm) sieve and compacted to same density as adjacent undisturbed earth.

C. Elevation: In paved areas, set so cover surface will be flush with finished grade. Set covers of other enclosures 1 inch (25 mm) above finished grade.

D. Install handholes with bottom below frost line, below grade.

E. Install removable hardware, including pulling eyes, cable stanchions, cable arms, and insulators, as required for installation and support of cables and conductors and as indicated. Select arm lengths to be long enough to provide spare space for future cables but short enough to preserve adequate working clearances in enclosure.

F. Field-cut openings for conduits according to enclosure manufacturer's written instructions. Cut wall of enclosure with a tool designed for material to be cut. Size holes for terminating fittings to be used, and seal around penetrations after fittings are installed.

3.5 PROTECTION

A. Provide final protection and maintain conditions that ensure coatings, finishes, and cabinets are without damage or deterioration at time of Substantial Completion.

1. Repair damage to galvanized finishes with zinc-rich paint recommended by manufacturer.
2. Repair damage to PVC or paint finishes with matching touchup coating recommended by manufacturer.

END OF SECTION 26 05 33

SECTION 26 05 43.13 – CLEANING UNDERGROUND DUCTS

PART 1 - GENERAL

1.1 SECTION INCLUDES

A. Removal of debris, obstructions and blockages from electrical conduits in ducts bank discovered during inspections.

1.2 SUBMITTALS

A. Refer to Section 01 33 00 Submittal Procedures and Section 01 33 00.13 – Document Control, for submittal procedures

B. Submission of the method proposed for removal of materials from conduits.

PART 2 - PRODUCTS

2.1 MATERIALS

A. The Trade Contractor shall utilize rods or mandrels to remove materials blocking conduits.

PART 3 - EXECUTION

3.1 CONSTRUCTION METHODS

A. The Trade Contractor shall provide qualified and experienced personnel and all necessary equipment, tools and materials and all incidentals required to perform the cleaning according to the requirements of this specification.

3.2 LEGAL, HEALTH AND SAFETY REQUIREMENTS

A. The Trade Contractor shall observe all federal, state and local laws, ordinances, policies, practices and regulations. In addition, the Trade Contractor agrees to promptly procure all necessary approvals, licenses and permits, pay all charges and fees, and give all notices necessary and incident to the due and lawful prosecution of the work.

B. The Trade Contractor shall conduct the work at all times in such a manner as to insure the least possible obstruction to traffic. The convenience of the general public and of the residents along and adjacent to the roadway shall be provided for in an adequate and satisfactory manner as the Engineer may direct.

C. All equipment and Materials shall be placed or stored in such locations so as not to be or to create the danger of becoming a hazard to the traveling public. No section of road shall be closed to the public except by permission of the City of New Haven.

D. The safety provisions of applicable laws, building, construction and fire safety codes and the latest edition of the "Construction Safety Code, State of Connecticut, Labor Department", approved by the State Labor Commissioner, shall be complied with at all times.

E. The Trade Contractor shall obtain the appropriate permits and approvals, and perform operations in strict accordance with OSHA and equipment manufacturers' safety requirements. Particular attention is drawn to safety requirements involving entering confined spaces.

3.3 ACCEPTANCE BY THE ENGINEER

A. Final Acceptance of the work shall be determined by the Engineer based upon the verification that the work has been successfully completed in accordance with this specification and the results of Television Inspections of the conduit.

END OF SECTION 26 05 43.13

SECTION 26 05 48 - VIBRATION AND SEISMIC CONTROLS FOR ELECTRICAL SYSTEMS

PART 1 - GENERAL

1.1 RELATED DOCUMENTS

A. Drawings and general provisions of the Trade Contract, including General and Supplementary Conditions and Division 01 Specification Sections, apply to this Section.

1.2 SUMMARY

A. This Section includes the following:

1. Isolation pads.
2. Spring isolators.
3. Restrained spring isolators.
4. Channel support systems.
5. Restraint cables.
6. Hanger rod stiffeners.
7. Anchorage bushings and washers.

B. Related Sections include the following:

1. Division 26 Section "Hangers and Supports for Electrical Systems" for commonly used electrical supports and installation requirements.

1.3 DEFINITIONS

A. The IBC: International Building Code.

B. ICC-ES: ICC-Evaluation Service.

1.4 PERFORMANCE REQUIREMENTS

A. Seismic-Restraint Loading:

1. Seismic Design Category: C.
2. Site Class as Defined in the IBC: E
3. Assigned Seismic Use Group or Occupancy Category as Defined in the IBC: II.
   a. Component Importance Factor: 1.0.
   b. Component Response Modification Factor: 3.0.
   c. Component Amplification Factor: 2.25.

4. Design Spectral Response Acceleration at Short Periods (0.2 Second): 24.3%.

5. Design Spectral Response Acceleration at 1.0-Second Period: 6.2%.

1.5 ACTION SUBMITTALS

A. Product Data: For the following:

1. Include rated load, rated deflection, and overload capacity for each vibration isolation device.

2. Illustrate and indicate style, material, strength, fastening provision, and finish for each type and size of seismic-restraint component used.

   a. Tabulate types and sizes of seismic restraints, complete with report numbers and rated strength in tension and shear as evaluated by an evaluation service member of ICC-ES.

   b. Annotate to indicate application of each product submitted and compliance with requirements.

3. Restrained-Isolation Devices: Include ratings for horizontal, vertical, and combined loads.

B. Delegated-Design Submittal: For vibration isolation and seismic-restraint details indicated to comply with performance requirements and design criteria, including analysis data signed and sealed by the qualified professional engineer responsible for their preparation.

1. Design Calculations: Calculate static and dynamic loading due to equipment weight and operation, seismic forces required to select vibration isolators and seismic restraints.

   a. Coordinate design calculations with wind-load calculations required for equipment mounted outdoors. Comply with requirements in other Division 26 Sections for equipment mounted outdoors.

2. Indicate materials and dimensions and identify hardware, including attachment and anchorage devices.

3. Field-fabricated supports.

4. Seismic-Restraint Details:

   a. Design Analysis: To support selection and arrangement of seismic restraints. Include calculations of combined tensile and shear loads.

   b. Details: Indicate fabrication and arrangement. Detail attachments of restraints to the restrained items and to the structure. Show attachment locations, methods, and spacings. Identify components, list their strengths, and indicate directions and values of forces transmitted to the structure during seismic events. Indicate association with vibration isolation devices.

1.6 INFORMATIONAL SUBMITTALS

A. Coordination Drawings: Show coordination of seismic bracing for electrical components with other systems and equipment in the vicinity, including other supports and seismic restraints.

B. Qualification Data: For professional engineer.

C. Welding certificates.

D. Field quality-control test reports.

1.7 QUALITY ASSURANCE

A. Testing Agency Qualifications: An independent agency, with the experience and capability to conduct the testing indicated, that is a nationally recognized testing laboratory (NRTL) as defined by OSHA in 29 CFR 1910.7, and that is acceptable to authorities having jurisdiction.

B. Comply with seismic-restraint requirements in the IBC unless requirements in this Section are more stringent.

C. Welding: Qualify procedures and personnel according to AWS D1.1/D1.1M, "Structural Welding Code - Steel."

D. Seismic-restraint devices shall have horizontal and vertical load testing and analysis and shall bear anchorage preapproval by ICC-ES, or preapproval by another agency acceptable to authorities having jurisdiction, showing maximum seismic-restraint ratings. Ratings based on independent testing are preferred to ratings based on calculations. If preapproved ratings are not available, submittals based on independent testing are preferred. Calculations (including combining shear and tensile loads) to support seismic-restraint designs must be signed and sealed by a qualified professional engineer.

E. Comply with NFPA 70.

PART 2 - PRODUCTS

2.1 VIBRATION ISOLATORS

A. Available Manufacturers: Subject to compliance with requirements, manufacturers offering products that may be incorporated into the Work include, but are not limited to, the following:

1. Ace Mountings Co., Inc.
2. Amber/Booth Company, Inc.
3. California Dynamics Corporation.
4. Isolation Technology, Inc.
5. Kinetics Noise Control.
6. Mason Industries.
7. Vibration Eliminator Co., Inc.
8. Vibration Isolation.
9. Vibration Mountings & Controls, Inc.

B. Pads: Arrange in single or multiple layers of sufficient stiffness for uniform loading over pad area, molded with a nonslip pattern and galvanized-steel baseplates, and factory cut to sizes that match requirements of supported equipment.

1. Resilient Material: Oil- and water-resistant neoprene.

C. Restrained Spring Isolators: Freestanding, steel, open-spring isolators with seismic or limit-stop restraint.

1. Housing: Steel with resilient vertical-limit stops to prevent spring extension due to weight being removed; factory-drilled baseplate bonded to 1/4-inch- (6-mm-) thick, neoprene or rubber isolator pad attached to baseplate underside; and adjustable equipment mounting and leveling bolt that acts as blocking during installation.

2. Restraint: Seismic or limit-stop as required for equipment and authorities having jurisdiction.

3. Outside Spring Diameter: Not less than 80 percent of the compressed height of the spring at rated load.

4. Minimum Additional Travel: 50 percent of the required deflection at rated load.

5. Lateral Stiffness: More than 80 percent of rated vertical stiffness.

6. Overload Capacity: Support 200 percent of rated load, fully compressed, without deformation or failure.

2.2 SEISMIC-RESTRAINT DEVICES

A. Available Manufacturers: Subject to compliance with requirements, manufacturers offering products that may be incorporated into the Work include, but are not limited to, the following:

1. Amber/Booth Company, Inc.

2. California Dynamics Corporation.

3. Cooper B-Line, Inc.; a division of Cooper Industries.

4. Hilti Inc.

5. Loos & Co.; Seismic Earthquake Division.

6. Mason Industries.

7. TOLCO Incorporated; a brand of NIBCO INC.

8. Unistrut; Tyco International, Ltd.

B. General Requirements for Restraint Components: Rated strengths, features, and application requirements shall be as defined in reports by an evaluation service member of ICC-ES.

1. Structural Safety Factor: Allowable strength in tension, shear, and pullout force of components shall be at least four times the maximum seismic forces to which they will be subjected.

C. Channel Support System: MFMA-3, shop- or field-fabricated support assembly made of slotted steel channels with accessories for attachment to braced component at one end and to building

structure at the other end and other matching components and with corrosion-resistant coating; and rated in tension, compression, and torsion forces.

D. Restraint Cables: ASTM A 603 galvanized-steel cables with end connections made of steel assemblies with thimbles, brackets, swivels, and bolts designed for restraining cable service; and with a minimum of two clamping bolts for cable engagement.

E. Hanger Rod Stiffener: Steel tube or steel slotted-support-system sleeve with internally bolted connections to hanger rod. Do not weld stiffeners to rods.

F. Bushings for Floor-Mounted Equipment Anchor: Neoprene bushings designed for rigid equipment mountings, and matched to type and size of anchors and studs.

G. Bushing Assemblies for Wall-Mounted Equipment Anchorage: Assemblies of neoprene elements and steel sleeves designed for rigid equipment mountings, and matched to type and size of attachment devices.

H. Resilient Isolation Washers and Bushings: One-piece, molded, oil- and water-resistant neoprene, with a flat washer face.

I. Mechanical Anchor: Drilled-in and stud-wedge or female-wedge type in zinc-coated steel for interior applications and stainless steel for exterior applications. Select anchors with strength required for anchor and as tested according to ASTM E 488. Minimum length of eight times diameter.

J. Adhesive Anchor: Drilled-in and capsule anchor system containing polyvinyl or urethane methacrylate-based resin and accelerator, or injected polymer or hybrid mortar adhesive. Provide anchor bolts and hardware with zinc-coated steel for interior applications and stainless steel for exterior applications. Select anchor bolts with strength required for anchor and as tested according to ASTM E 488.

2.3 FACTORY FINISHES

A. Finish: Manufacturer's standard prime-coat finish ready for field painting.

B. Finish: Manufacturer's standard paint applied to factory-assembled and -tested equipment before shipping.

1. Powder coating on springs and housings.
2. All hardware shall be galvanized. Hot-dip galvanize metal components for exterior use.
3. Baked enamel or powder coat for metal components on isolators for interior use.
4. Color-code or otherwise mark vibration isolation and seismic-control devices to indicate capacity range.

PART 3 - EXECUTION

3.1 EXAMINATION

A. Examine areas and equipment to receive vibration isolation and seismic-control devices for compliance with requirements for installation tolerances and other conditions affecting performance.

B. Examine roughing-in of reinforcement and cast-in-place anchors to verify actual locations before installation.

C. Proceed with installation only after unsatisfactory conditions have been corrected.

3.2 APPLICATIONS

A. Multiple Raceways or Cables: Secure raceways and cables to trapeze member with clamps approved for application by an evaluation service member of ICC-ES.

B. Hanger Rod Stiffeners: Install hanger rod stiffeners where indicated or scheduled on Drawings to receive them and where required to prevent buckling of hanger rods due to seismic forces.

C. Strength of Support and Seismic-Restraint Assemblies: Where not indicated, select sizes of components so strength will be adequate to carry present and future static and seismic loads within specified loading limits.

3.3 SEISMIC-RESTRAINT DEVICE INSTALLATION

A. Equipment and Hanger Restraints:

1. Install restrained isolators on electrical equipment.
2. Install resilient, bolt-isolation washers on equipment anchor bolts where clearance between anchor and adjacent surface exceeds 0.125 inch (3.2 mm).
3. Install seismic-restraint devices using methods approved by an evaluation service member of ICC-ES providing required submittals for component.

B. Install bushing assemblies for mounting bolts for wall-mounted equipment, arranged to provide resilient media where equipment or equipment-mounting channels are attached to wall.

C. Attachment to Structure: If specific attachment is not indicated, anchor bracing to structure at flanges of beams, at upper truss chords of bar joists, or at concrete members.

D. Drilled-in Anchors:

1. Identify position of reinforcing steel and other embedded items prior to drilling holes for anchors. Do not damage existing reinforcing or embedded items during coring or drilling. Notify the structural engineer if reinforcing steel or other embedded items are encountered during drilling. Locate and avoid prestressed tendons, electrical and telecommunications conduit, and gas lines.

2. Do not drill holes in concrete or masonry until concrete, mortar, or grout has achieved full design strength.

3. Wedge Anchors: Protect threads from damage during anchor installation. Heavy-duty sleeve anchors shall be installed with sleeve fully engaged in the structural element to which anchor is to be fastened.

4. Adhesive Anchors: Clean holes to remove loose material and drilling dust prior to installation of adhesive. Place adhesive in holes proceeding from the bottom of the hole and progressing toward the surface in such a manner as to avoid introduction of air pockets in the adhesive.

5. Set anchors to manufacturer's recommended torque, using a torque wrench.

6. Install zinc-coated steel anchors for interior and stainless-steel anchors for exterior applications.

3.4 ACCOMMODATION OF DIFFERENTIAL SEISMIC MOTION

A. Install flexible connections in runs of raceways, cables, wireways, cable trays, and busways where they cross seismic joints, where adjacent sections or branches are supported by different structural elements, and where they terminate with connection to equipment that is anchored to a different structural element from the one supporting them as they approach equipment.

3.5 FIELD QUALITY CONTROL

A. Testing Agency: Engage a qualified testing agency to perform tests and inspections and prepare test reports.

B. Perform tests and inspections.

C. Tests and Inspections:

1. Provide evidence of recent calibration of test equipment by a testing agency acceptable to authorities having jurisdiction.

2. Schedule test with Owner, through CTDOT PM, before connecting anchorage device to restrained component (unless postconnection testing has been approved), and with at least seven days' advance notice.

3. Obtain CTDOT PM's approval before transmitting test loads to structure. Provide temporary load-spreading members.

4. Test at least four of each type and size of installed anchors and fasteners selected by CTDOT PM.

5. Test to 90 percent of rated proof load of device.

6. Measure isolator restraint clearance.

7. Measure isolator deflection.

8. Verify snubber minimum clearances.

9. If a device fails test, modify all installations of same type and retest until satisfactory results are achieved.

D. Remove and replace malfunctioning units and retest as specified above.

E. Prepare test and inspection reports.

3.6 ADJUSTING

A. Adjust isolators after isolated equipment is at operating weight.

B. Adjust limit stops on restrained spring isolators to mount equipment at normal operating height. After equipment installation is complete, adjust limit stops so they are out of contact during normal operation.

C. Adjust active height of spring isolators.

D. Adjust restraints to permit free movement of equipment within normal mode of operation.

END OF SECTION 26 05 48

SECTION 26 05 53 - IDENTIFICATION FOR ELECTRICAL SYSTEMS

PART 1 - GENERAL

1.1 RELATED DOCUMENTS

A. Drawings and general provisions of the Trade Contract, including General and Supplementary Conditions and Division 01 Specification Sections, apply to this Section.

1.2 SUMMARY

A. Section Includes:

1. Identification for conductors.
2. Warning labels and signs.
3. Instruction signs.
4. Equipment identification labels.
5. Miscellaneous identification products.

1.3 QUALITY ASSURANCE

A. Comply with ANSI A13.1 and IEEE C2.

B. Comply with NFPA 70.

C. Comply with 29 CFR 1910.144 and 29 CFR 1910.145.

D. Comply with ANSI Z535.4 for safety signs and labels.

E. Adhesive-attached labeling materials, including label stocks, laminating adhesives, and inks used by label printers, shall comply with UL 969.

1.4 COORDINATION

A. Coordinate identification names, abbreviations, colors, and other features with requirements in other Sections requiring identification applications, Drawings, Shop Drawings, manufacturer's wiring diagrams, and the Operation and Maintenance Manual; and with those required by codes, standards, and 29 CFR 1910.145. Use consistent designations throughout Project.

B. Coordinate installation of identifying devices with completion of covering and painting of surfaces where devices are to be applied.

C. Coordinate installation of identifying devices with location of access panels and doors.

D. Install identifying devices before installing acoustical ceilings and similar concealment.

PART 2 - PRODUCTS

2.1 CONDUCTOR IDENTIFICATION MATERIALS

A. Color-Coding Conductor Tape: Colored, self-adhesive vinyl tape not less than 3 mils (0.08 mm) thick by 1 to 2 inches (25 to 50 mm) wide.

B. Self-Adhesive Vinyl Labels: Preprinted, flexible label laminated with a clear, weather- and chemical-resistant coating and matching wraparound adhesive tape for securing ends of legend label.

C. Snap-Around Labels: Slit, pretensioned, flexible, preprinted, color-coded acrylic sleeve, with diameter sized to suit diameter of raceway or cable it identifies and to stay in place by gripping action.

D. Snap-Around, Color-Coding Bands: Slit, pretensioned, flexible, solid-colored acrylic sleeve, 2 inches (50 mm) long, with diameter sized to suit diameter of raceway or cable it identifies and to stay in place by gripping action.

E. Marker Tapes: Vinyl or vinyl-cloth, self-adhesive wraparound type, with circuit identification legend machine printed by thermal transfer or equivalent process.

F. Write-On Tags: Polyester tag, 0.010 inch (0.25 mm) thick, with corrosion-resistant grommet and cable tie for attachment to conductor or cable.

1. Marker for Tags: Permanent, waterproof, black ink marker recommended by tag manufacturer.

2.2 FLOOR MARKING TAPE

A. 2-inch- (50-mm-) wide, 5-mil (0.125-mm) pressure-sensitive vinyl tape, with black and white stripes and clear vinyl overlay.

2.3 WARNING LABELS AND SIGNS

A. Comply with NFPA 70 and 29 CFR 1910.145.

B. Self-Adhesive Warning Labels: Factory-printed, multicolor, pressure-sensitive adhesive labels, configured for display on front cover, door, or other access to equipment unless otherwise indicated.

C. Baked-Enamel Warning Signs:

1. Preprinted aluminum signs, punched or drilled for fasteners, with colors, legend, and size required for application.

2. 1/4-inch (6.4-mm) grommets in corners for mounting.

3. Nominal size, 7 by 10 inches (180 by 250 mm).

D. Metal-Backed, Butyrate Warning Signs:

1. Weather-resistant, nonfading, preprinted, cellulose-acetate butyrate signs with 0.0396-inch (1-mm) galvanized-steel backing; and with colors, legend, and size required for application.

2. 1/4-inch (6.4-mm) grommets in corners for mounting.

3. Nominal size, 10 by 14 inches (250 by 360 mm).

E. Warning label and sign shall include, but are not limited to, the following legends:

1. Multiple Power Source Warning: "DANGER - ELECTRICAL SHOCK HAZARD - EQUIPMENT HAS MULTIPLE POWER SOURCES."

2. Workspace Clearance Warning: "WARNING - OSHA REGULATION - AREA IN FRONT OF ELECTRICAL EQUIPMENT MUST BE KEPT CLEAR FOR 36 INCHES."

2.4 INSTRUCTION SIGNS

A. Engraved, laminated acrylic or melamine plastic, minimum 1/16 inch (1.6 mm) thick for signs up to 20 sq. inches (129 sq. cm) and 1/8 inch (3.2 mm) thick for larger sizes.

1. Engraved legend with black letters on white face.

2. Punched or drilled for mechanical fasteners.

3. Framed with mitered acrylic molding and arranged for attachment at applicable equipment.

B. Adhesive Film Label: Machine printed, in black, by thermal transfer or equivalent process. Minimum letter height shall be 3/8 inch (10 mm).

C. Adhesive Film Label with Clear Protective Overlay: Machine printed, in black, by thermal transfer or equivalent process. Minimum letter height shall be 3/8 inch (10 mm). Overlay shall provide a weatherproof and UV-resistant seal for label.

2.5 EQUIPMENT IDENTIFICATION LABELS

A. Self-Adhesive, Engraved, Laminated Acrylic or Melamine Label: Adhesive backed, with white letters on a dark-gray background. Minimum letter height shall be 3/8 inch (10 mm).

B. Stenciled Legend: In nonfading, waterproof, black ink or paint. Minimum letter height shall be 1 inch (25 mm).

2.6 CABLE TIES

A. General-Purpose Cable Ties: Fungus inert, self extinguishing, one piece, self locking, Type 6/6 nylon.

1. Minimum Width: 3/16 inch (5 mm).

2. Tensile Strength at 73 deg F (23 deg C), According to ASTM D 638: 12,000 psi (82.7 MPa).

3. Temperature Range: Minus 40 to plus 185 deg F (Minus 40 to plus 85 deg C).

4. Color: Black except where used for color-coding.

B. Plenum-Rated Cable Ties: Self extinguishing, UV stabilized, one piece, self locking.

1. Minimum Width: 3/16 inch (5 mm).

2. Tensile Strength at 73 deg F (23 deg C), According to ASTM D 638: 7000 psi (48.2 MPa).

3. UL 94 Flame Rating: 94V-0.

4. Temperature Range: Minus 50 to plus 284 deg F (Minus 46 to plus 140 deg C).

5. Color: Black.

2.7 MISCELLANEOUS IDENTIFICATION PRODUCTS

A. Paint: Comply with requirements in Division 09 painting Sections for paint materials and application requirements. Select paint system applicable for surface material and location (exterior or interior).

B. Fasteners for Labels and Signs: Self-tapping, stainless-steel screws or stainless-steel machine screws with nuts and flat and lock washers.

PART 3 - EXECUTION

3.1 INSTALLATION

A. Verify identity of each item before installing identification products.

B. Location: Install identification materials and devices at locations for most convenient viewing without interference with operation and maintenance of equipment.

C. Apply identification devices to surfaces that require finish after completing finish work.

D. Self-Adhesive Identification Products: Clean surfaces before application, using materials and methods recommended by manufacturer of identification device.

E. Attach signs and plastic labels that are not self-adhesive type with mechanical fasteners appropriate to the location and substrate.

F. Marker Labels and Metal Tags: Secure tight to surface of conductor or cable at a location with high visibility and accessibility.

G. Cable Ties: For attaching tags. Use general-purpose type, except as listed below:

1. Outdoors: UV-stabilized nylon.

2. In Spaces Handling Environmental Air: Plenum rated.

H. Painted Identification: Comply with requirements in Division 09 painting Sections for surface preparation and paint application.

3.2 IDENTIFICATION SCHEDULE

A. Power-Circuit Conductor Identification, 600 V or Less: For conductors in vaults, pull and junction boxes, manholes, and handholes, use color-coding conductor tape to identify the phase.

1. Color-Coding for Phase and Voltage Level Identification, 600 V or Less: Use colors listed below for ungrounded service, feeder and branch-circuit conductors.

a. Color shall be factory applied or field applied for sizes larger than No. 8 AWG, if authorities having jurisdiction permit.

b. Colors for 208/120-V Circuits:

1) Phase A: Black.
2) Phase B: Red.
3) Phase C: Blue.

c. Colors for 480/277-V Circuits:

1) Phase A: Brown.
2) Phase B: Orange.
3) Phase C: Yellow.

d. Field-Applied, Color-Coding Conductor Tape: Apply in half-lapped turns for a minimum distance of 6 inches (150 mm) from terminal points and in boxes where splices or taps are made. Apply last two turns of tape with no tension to prevent possible unwinding. Locate bands to avoid obscuring factory cable markings.

B. Install instructional sign including the color-code for grounded and ungrounded conductors using adhesive-film-type labels.

C. Conductors to Be Extended in the Future: Attach write-on tags to conductors and list source.

D. Auxiliary Electrical Systems Conductor Identification: Identify field-installed alarm, control, and signal connections.

1. Identify conductors, cables, and terminals in enclosures and at junctions, terminals, and pull points. Identify by system and circuit designation. Control wire shall include “to” or “from”.

2. Use system of marker tape designations that is uniform and consistent with system used by manufacturer for factory-installed connections.

3. Coordinate identification with Project Drawings, manufacturer's wiring diagrams, and the Operation and Maintenance Manual.

E. Workspace Indication: Install floor marking tape to show working clearances in the direction of access to live parts. Workspace shall be as required by NFPA 70 and 29 CFR 1926.403 unless

otherwise indicated. Do not install at flush-mounted panelboards and similar equipment in finished spaces.

F. Warning Labels for Indoor Cabinets, Boxes, and Enclosures for Power and Lighting: Self-adhesive warning labels.

1. Comply with 29 CFR 1910.145.

2. Identify system voltage with black letters on an orange background.

3. Apply to exterior of door, cover, or other access.

4. For equipment with multiple power or control sources, apply to door or cover of equipment including, but not limited to, the following:

a. Power transfer switches.

b. Controls with external control power connections.

G. Operating Instruction Signs: Install instruction signs to facilitate proper operation and maintenance of electrical systems and items to which they connect. Install instruction signs with approved legend where instructions are needed for system or equipment operation.

H. Emergency Operating Instruction Signs: Install instruction signs with white legend on a red background with minimum 3/8-inch- (10-mm-) high letters for emergency instructions at equipment used for power transfer.

I. Equipment Identification Labels: On each unit of equipment, install unique designation label that is consistent with wiring diagrams, schedules, and the Operation and Maintenance Manual. Apply labels to disconnect switches and protection equipment, central or master units, control panels, control stations, terminal cabinets, and racks of each system. Systems include power, lighting, control, communication, signal, monitoring, and alarm systems unless equipment is provided with its own identification.

1. Labeling Instructions:

a. Indoor Equipment: Self-adhesive, engraved, laminated acrylic or melamine label. Unless otherwise indicated, provide a single line of text with 1/2-inch- (13-mm-) high letters on 1-1/2-inch- (38-mm-) high label; where two lines of text are required, use labels 2 inches (50 mm) high.

b. Outdoor Equipment: Stenciled legend 4 inches (100 mm) high.

c. Elevated Components: Increase sizes of labels and letters to those appropriate for viewing from the floor.

d. Unless provided with self-adhesive means of attachment, fasten labels with appropriate mechanical fasteners that do not change the NEMA or NRTL rating of the enclosure.

2. Equipment to Be Labeled:

a. Panelboards: Typewritten directory of circuits in the location provided by panelboard manufacturer. Panelboard identification shall be self-adhesive, engraved, laminated acrylic or melamine label.

b. Enclosures and electrical cabinets.

c. Access doors and panels for concealed electrical items.

d. Transformers: Label that includes tag designation shown on Drawings for the transformer, feeder, and panelboards or equipment supplied by the secondary.

e. Enclosed switches.

f. Enclosed circuit breakers.

g. Enclosed controllers.

h. Variable-speed controllers.

i. Power transfer equipment.

j. Remote-controlled switches, dimmer modules, and control devices.

k. Power-generating units.

l. Monitoring and control equipment.

END OF SECTION 26 05 53

SECTION 26 05 73 - OVERCURRENT PROTECTIVE DEVICE COORDINATION STUDY

PART 1 - GENERAL

1.1 RELATED DOCUMENTS

A. Drawings and general provisions of the Trade Contract, including General and Supplementary Conditions and Division 01 Specification Sections, apply to this Section.

1.2 SUMMARY

A. This Section includes computer-based, fault-current, arc flash and overcurrent protective device coordination studies. Protective devices shall be set based on results of the protective device coordination study.

1.3 ACTION SUBMITTALS

A. Product Data: For computer software program to be used for studies.

B. Other Action Submittals: The following submittals shall be made after the approval process for system protective devices has been completed. Submittals may be in digital form.

1. Coordination-study input data, including completed computer program input data sheets.

2. Study and Equipment Evaluation Reports.

3. Coordination-Study Report.

1.4 INFORMATIONAL SUBMITTALS

A. Qualification Data: For coordination-study specialist.

B. Product Certificates: For coordination-study and fault-current-study computer software programs, certifying compliance with IEEE 399.

1.5 QUALITY ASSURANCE

A. Studies shall use computer programs that are distributed nationally and are in wide use. Software algorithms shall comply with requirements of standards and guides specified in this Section. Manual calculations are not acceptable.

B. Coordination-Study Specialist Qualifications: An entity experienced in the application of computer software used for studies, having performed successful studies of similar magnitude on electrical distribution systems using similar devices.

1. Professional engineer, licensed in the state where Project is located, shall be responsible for the study. All elements of the study shall be performed under the direct supervision and control of engineer.

C. Comply with IEEE 242 for short-circuit currents and coordination time intervals.

D. Comply with IEEE 399 for general study procedures.

PART 2 - PRODUCTS

2.1 COMPUTER SOFTWARE DEVELOPERS

A. Computer Software Developers: Subject to compliance with requirements, provide products by one of the following:

1. CGI CYME.

2. EDSA Micro Corporation.

3. ESA Inc.

4. SKM Systems Analysis, Inc.

2.2 COMPUTER SOFTWARE PROGRAM REQUIREMENTS

A. Comply with IEEE 399.

B. Analytical features of fault-current-study computer software program shall include "mandatory," "very desirable," and "desirable" features as listed in IEEE 399.

C. Computer software program shall be capable of plotting and diagramming time-current-characteristic curves as part of its output. Computer software program shall report device settings and ratings of all overcurrent protective devices and shall demonstrate selective coordination by computer-generated, time-current coordination plots.

1. Optional Features:

a. Arcing faults.
b. Simultaneous faults.
c. Explicit negative sequence.
d. Mutual coupling in zero sequence.

PART 3 - EXECUTION

3.1 EXAMINATION

A. Examine Project overcurrent protective device submittals for compliance with electrical distribution system coordination requirements and other conditions affecting performance. Devices to be coordinated are indicated on Drawings.

1. Proceed with coordination study only after relevant equipment submittals have been assembled. Overcurrent protective devices that have not been submitted and approved prior to coordination study may not be used in study.

3.2 POWER SYSTEM DATA

A. Gather and tabulate the following input data to support coordination study:

1. Product Data for overcurrent protective devices specified in other Division 26 Sections and involved in overcurrent protective device coordination studies. Use equipment designation tags that are consistent with electrical distribution system diagrams, overcurrent protective device submittals, input and output data, and recommended device settings.

2. Impedance of utility service entrance.

3. Electrical Distribution System Diagram: In hard-copy and electronic-copy formats, showing the following:

   a. Circuit-breaker and fuse-current ratings and types.
   b. Relays and associated power and current transformer ratings and ratios.
   c. Transformer kilovolt amperes, primary and secondary voltages, connection type, impedance, and X/R ratios.
   d. Generator kilovolt amperes, size, voltage, and source impedance.
   e. Cables: Indicate conduit material, sizes of conductors, conductor material, insulation, and length.
   f. Motor horsepower and code letter designation according to NEMA MG 1.

4. Data sheets to supplement electrical distribution system diagram, cross-referenced with tag numbers on diagram, showing the following:

   a. Special load considerations, including starting inrush currents and frequent starting and stopping.
   b. Transformer characteristics, including primary protective device, magnetic inrush current, and overload capability.
   c. Motor full-load current, locked rotor current, service factor, starting time, type of start, and thermal-damage curve.
   d. Generator thermal-damage curve.
   e. Ratings, types, and settings of utility company's overcurrent protective devices.
   f. Special overcurrent protective device settings or types stipulated by utility company.

g. Time-current-characteristic curves of devices indicated to be coordinated.
h. Manufacturer, frame size, interrupting rating in amperes rms symmetrical, ampere or current sensor rating, long-time adjustment range, short-time adjustment range, and instantaneous adjustment range for circuit breakers.
i. Manufacturer and type, ampere-tap adjustment range, time-delay adjustment range, instantaneous attachment adjustment range, and current transformer ratio for overcurrent relays.
j. Panelboards, switchboards, motor-control center ampacity, and interrupting rating in amperes rms symmetrical.

3.3 FAULT-CURRENT STUDY

A. Calculate the maximum available short-circuit current in amperes rms symmetrical at circuit-breaker positions of the electrical power distribution system. The calculation shall be for a current immediately after initiation and for a three-phase bolted short circuit at each of the following:

1. Medium-voltage service transformer.

2. Main Secondary Service and Distribution panelboards.

3. Branch circuit panelboards.

B. Study electrical distribution system from normal and alternate power sources throughout electrical distribution system for Project. Include studies of system-switching configurations and alternate operations that could result in maximum fault conditions.

C. Calculate momentary and interrupting duties on the basis of maximum available fault current.

D. Calculations to verify interrupting ratings of overcurrent protective devices shall comply with IEEE 241 and IEEE 242.

1. Transformers:

a. ANSI C57.12.10.
b. ANSI C57.12.22.
c. ANSI C57.12.40.
d. IEEE C57.12.00.
e. IEEE C57.96.

2. Medium-Voltage Circuit Breakers: IEEE C37.010.

3. Low-Voltage Circuit Breakers: IEEE 1015 and IEEE C37.20.1.

4. Low-Voltage Fuses: IEEE C37.46.

E. Study Report:

1. Show calculated X/R ratios and equipment interrupting rating (1/2-cycle) fault currents on electrical distribution system diagram.

2. Show interrupting (5-cycle) and time-delayed currents (6 cycles and above) on medium- and high-voltage breakers as needed to set relays and assess the sensitivity of overcurrent relays.

F. Equipment Evaluation Report:

1. For 600-V overcurrent protective devices, ensure that interrupting ratings are equal to or higher than calculated 1/2-cycle symmetrical fault current.

2. For devices and equipment rated for asymmetrical fault current, apply multiplication factors listed in the standards to 1/2-cycle symmetrical fault current.

3. Verify adequacy of phase conductors at maximum three-phase bolted fault currents; verify adequacy of equipment grounding conductors and grounding electrode conductors at maximum ground-fault currents. Ensure that short-circuit withstand ratings are equal to or higher than calculated 1/2-cycle symmetrical fault current.

3.4 COORDINATION STUDY

A. Perform coordination study using approved computer software program. Prepare a written report using results of fault-current study. Comply with IEEE 399.

1. Calculate the maximum and minimum 1/2-cycle short-circuit currents.

2. Calculate the maximum and minimum interrupting duty (5 cycles to 2 seconds) short-circuit currents.

3. Calculate the maximum and minimum ground-fault currents.

B. Comply with IEEE 241 recommendations for fault currents and time intervals.

C. Transformer Primary Overcurrent Protective Devices:

1. Device shall not operate in response to the following:

a. Inrush current when first energized.
b. Self-cooled, full-load current or forced-air-cooled, full-load current, whichever is specified for that transformer.
c. Permissible transformer overloads according to IEEE C57.96 if required by unusual loading or emergency conditions.

2. Device settings shall protect transformers according to IEEE C57.12.00, for fault currents.

D. Conductor Protection: Protect cables against damage from fault currents according to ICEA P-32-382, ICEA P-45-482, and conductor melting curves in IEEE 242. Demonstrate that equipment withstands the maximum short-circuit current for a time equivalent to the tripping time of the primary relay protection or total clearing time of the fuse. To determine temperatures that damage insulation, use curves from cable manufacturers or from listed standards indicating conductor size and short-circuit current.

E. Coordination-Study Report: Prepare a written report indicating the following results of coordination study:

1. Tabular Format of Settings Selected for Overcurrent Protective Devices:

   a. Device tag.
   b. Relay-current transformer ratios; and tap, time-dial, and instantaneous-pickup values.
   c. Circuit-breaker sensor rating; and long-time, short-time, and instantaneous settings.
   d. Fuse-current rating and type.
   e. Ground-fault relay-pickup and time-delay settings.

2. Coordination Curves: Prepared to determine settings of overcurrent protective devices to achieve selective coordination. Graphically illustrate that adequate time separation exists between devices installed in series, including power utility company's upstream devices. Prepare separate sets of curves for the switching schemes and for emergency periods where the power source is local generation. Show the following information:

   a. Device tag.
   b. Voltage and current ratio for curves.
   c. Three-phase and single-phase damage points for each transformer.
   d. No damage, melting, and clearing curves for fuses.
   e. Cable damage curves.
   f. Transformer inrush points.
   g. Maximum fault-current cutoff point.

F. Completed data sheets for setting of overcurrent protective devices.

3.5 ARC FLASH HAZARD ANALYSIS

A. The arc flash hazard analysis shall be performed according to the IEEE 1584 equations that are presented in NFPA70E, Annex D.

B. The flash protection boundary and the incident energy shall be calculated at all significant locations in the electrical distribution system (switchboards, panelboards and splitters) where work could be performed on energized parts.

C. The flash protection boundary and the incident energy shall be calculated at all significant locations in the electrical distribution system (switchboards, panelboards and splitters) where work could be performed on energized parts.

D. The Arc-Flash Hazard Analysis shall include all significant locations in 208 volt systems fed from transformers equal to or greater than 125 kVA where work could be performed on energized parts.

E. Safe working distances shall be based upon the calculated arc flash boundary considering an incident energy of 1.2 cal/cm^2.

F. When appropriate, the short circuit calculations and the clearing times of the phase overcurrent devices will be retrieved from the short-circuit and coordination study model. Ground overcurrent relays should not be taken into consideration when determining the clearing time when performing incident energy calculations

G. The short-circuit calculations and the corresponding incident energy calculations for multiple system scenarios must be compared and the greatest incident energy must be uniquely reported for each equipment location. Calculations must be performed to represent the maximum and minimum contributions of fault current magnitude for all normal operating conditions. The minimum calculation will assume that the utility contribution is at a minimum and will assume a minimum motor contribution (all motors off). Conversely, the maximum calculation will assume a maximum contribution from the utility and will assume the maximum amount of motors to be operating. Calculations shall take into consideration the parallel operation of synchronous generators with the electric utility, where applicable.

H. The incident energy calculations must consider the accumulation of energy over time when performing arc flash calculations on buses with multiple sources. Iterative calculations must take into account the changing current contributions, as the sources are interrupted or decremented with time. Fault contribution from motors and generators should be decremented as follows:

1. Fault contribution from induction motors should not be considered beyond 3-5 cycles.

2. Fault contribution from synchronous motors and generators should be decayed to match the actual decrement of each as closely as possible (e.g. contributions from permanent magnet generators will typically decay from 10 per unit to 3 per unit after 10 cycles).

I. For each equipment location with a separately enclosed main device (where there is adequate separation between the line side terminals of the main protective device and the work location), calculations for incident energy and flash protection boundary shall include both the line and load side of the main breaker.

J. When performing incident energy calculations on the line side of a main breaker (as required per above), the line side and load side contributions must be included in the fault calculation.

K. Mis-coordination should be checked amongst all devices within the branch containing the immediate protective device upstream of the calculation location and the calculation should utilize the fastest device to compute the incident energy for the corresponding location.

L. Arc Flash calculations shall be based on actual overcurrent protective device clearing time. Maximum clearing time will be capped at 2 seconds based on IEEE 1584-2002 section B.1.2. Where it is not physically possible to move outside of the flash protection boundary in less than 2 seconds during an arc flash event, a maximum clearing time based on the specific location shall be utilized.

3.6 ARC FLASH WARNING LABELS

A. The trade contractor of the Arc Flash Hazard Analysis shall provide a 3.5 in. x 5 in. thermal transfer type label of high adhesion polyester for each work location analyzed.

B. All labels will be based on recommended overcurrent device settings and will be provided after the results of the analysis have been presented to the owner and after any system changes, upgrades or modifications have been incorporated in the system.

C. The label shall include the following information, at a minimum:

1. Location designation
2. Nominal voltage
3. Flash protection boundary
4. Hazard risk category
5. Incident energy
6. Working distance
7. Engineering report number, revision number and issue date.

D. Labels shall be machine printed, with no field markings.

E. Arc flash labels shall be provided in the following manner and all labels shall be based on recommended overcurrent device settings.

1. For each 480 and applicable 208 volt panelboard, one arc flash label shall be provided.

2. For each low voltage switchboard, one arc flash label shall be provided.

F. Labels shall be field installed by the engineering service division of the equipment manufacturer under the Startup and Acceptance Testing contract portion.

3.7 ARC FLASH TRAINING

A. The trade contractor of the Arc Flash Hazard Analysis shall train the owner's qualified electrical personnel of the potential arc flash hazards associated with working on energized equipment (minimum of 4 hours).

END OF SECTION 26 05 73

SECTION 26 08 00 – ELECTRICAL SYSTEMS COMMISSIONING

PART 1 – GENERAL

1.1. RELATED DOCUMENTS

A. Drawings and general provisions of the Trade Contract, including General and Supplementary Conditions and Division 1 Specification Sections, apply to this Section.

1.2. SUMMARY

A. Commissioning consists of systematically documenting that specified components and systems have been installed and started up properly and then functionally tested to verify and document proper operation through all sequences of operation and conditions. In addition, training of the Owner's Operations Personnel will be verified and final project O&M Documents will be reviewed for completeness.

1.3. DESCRIPTION

A. This section also includes requirements for furnishing all labor, materials, and technical supervision to perform training for equipment and special systems described herein.

B. This Section specifies that Trade Contractor shall engage the services of a recognized independent testing company for performing final inspections and tests as specified.

1. The CM/GC will witness Inspections and tests. Notify the CM/GC a minimum of 14 working days in advance of testing date.

C. The testing company shall provide all material, test instruments, equipment, labor, and technical supervision to perform such tests and inspections.

D. It is the intent of these tests to verify that electrical equipment is operational within industry and manufacturer's tolerances, and is installed in accordance with these specifications.

E. Perform tests, calibration, adjustment of relays and inspections before energizing any equipment.

F. Upon completion of the tests and inspections specified, a label shall be provided in accordance with NETA labeling.

G. Relay settings shall be made using approved relay setting reports, short circuit and coordination studies.

1.4. QUALITY ASSURANCE

A. Reference Standards:

1. OSHA Part 1910; Subpart S. 1910.308.

a. American National Standards Institute: ANSI
b. American Society for Testing and Materials: ASTM
c. Association of Edison Illuminating Companies: AEIC
d. Institute of Electrical and Electronics Engineers: IEEE
e. Insulated Cable Engineers Association: ICEA
f. National Electrical Manufacturers Association: NEMA

g. National Electrical Testing Association: NETA
h. National Fire Protection Association (NFPA):
   1) National Electrical Code (NEC).

B. All inspections and tests shall use the following references.

1. Trade Contract Specifications.
2. Drawings.
3. Manufacturer's instruction manuals and approved shop drawings for applicable equipment.
4. "Acceptance Testing Specifications for Electrical Power Distribution Equipment and Systems" by InterNational Electrical Testing Association (NETA).

C. Qualifications of Testing Company:

1. The testing company shall meet OSHA 29 CFR 1907 criteria for accreditation of testing laboratories. A testing company with full membership in NETA constitutes proof of meeting such criteria. Trade Contractors with employees that are full members of NETA are not acceptable.
2. Trade Contractor shall submit the testing company's qualifications and the resumes of the personnel proposed to be assigned to this Project for the CM/GC's approval before commencement of the work.

1.5. SUBMITTALS

A. In accordance with the requirements of Section 01 33 00 – Submittal Procedures, Section 01 33 00.13 – Document Control and Section 01 78 30 – Warranties and Bonds.

B. Submit the testing company's qualifications and the resumes of the personnel proposed to be assigned to this Project.

C. Fixed test procedures as recommended by the equipment/system manufacturer.

D. Submit proposed testing program and test procedures for review and approval by the CDOT and MNR before beginning any testing thirty (30) days before any testing is conducted. Each procedure shall include the following as a minimum:

1. Statement of procedure objective and scope.
2. List of equipment required to set up and perform the procedure.
3. List of equipment or services required from areas outside Trade Contractor's control.
4. List of prerequisite tests that need to be completed before the procedure can be performed.
5. Description of the required procedure setup, including diagrams illustrating test equipment connections and identifying test points, where applicable.
6. Step-by-step instructions for performing the procedure identifying the points where data is to be recorded and the limits for acceptable data, in accordance with referenced standards.
7. Provisions for recording pertinent test conditions and environment at time of test.

8. Instructions for recording data on data sheets and verifying that procedure steps have been completed.

E. Test Report (Draft and Final)

1. The draft and final test reports, shall include, but not be limited to, the following:

   a. Summary of Project.
   b. Description of equipment tested.
   c. Description of test.
   d. List of test equipment used in calibration and calibration date.
   e. Test results, including plots/graphs and actual readings/measurements taken including corrected values.
   f. Conclusions and recommendations.
   g. Appendix, including appropriate test forms.
   h. All test reports shall be signed by the CM/GC's authorized witness present at the test.

2. The final test report shall be bound and its contents certified.

3. Furnish ten copies of the completed final test report to the CM/GC no later than 15 days after completion of the inspection and testing.

F. Instruments: Submit list of instruments and certification indicating that instruments that will be used for testing have been calibrated and their accuracy certified within a previous period of not more than one month. List types of instruments to be used, manufacturer, model, serial number, latest date of calibration, and calibration organization.

1.6. TEST INSTRUMENT SERVICE AND CALIBRATION

A. Calibration Program and Accuracy:

1. The testing company shall have a calibration program that maintains applicable test instrumentation within rated accuracy in accordance with manufacturer’s recommendations and standard industry practice.

2. The accuracy shall be traceable to the National Bureau of Standards (NBS) in an unbroken chain.

3. Instruments shall be calibrated in accordance with the following frequency schedule:

   a. Field instruments: 6 months, maximum.
   b. Laboratory instruments: 12 months.
   c. Leased specialty equipment: 12 months (where accuracy is guaranteed by the lessor)

4. Dated calibration labels shall be visible on test equipment.

B. Safety and Precautions:

1. Safety practices shall include, but are not limited to, the following requirements.

   a. OSHA
   b. Accident Prevention Manual for Industrial Operations, Seventh Edition, National Safety Council, Chapter 4.
   c. Applicable State and local safety operating procedures.

2. Acceptance tests shall be performed with apparatus de-energized, unless otherwise specified.
3. The testing company shall have a designated safety representative who shall be present on the Project and supervise operations with respect to safety.
4. Circuits operating in excess of 600-volts between conductors shall have conductors shorted to ground by a hot-line grounded device UL approved for the purpose.
5. In all cases, work shall not proceed until the safety representative has determined that it is safe to do so.
6. The testing company shall have available sufficient protective barriers and warning signs. The testing company shall place the protective barriers and warning signs in close proximity to the area where testing is being performed.

PART 2 – PRODUCTS

2.1. PRE-FUNCTIONIAL AND FUNCTIONAL PERFORMANCE TESTING EQUIPMENT AND INSTRUMENTS

A. The appropriate Trade Contractor(s) shall furnish all special tools and equipment required during the entire commissioning process. A list of all tools and equipment to be used during commissioning shall be submitted to the Commissioning Authority for approval. The owner shall furnish necessary utilities for the commissioning process.

B. Proprietary test equipment and software required by any equipment manufacturer for programming and/or start-up, whether specified or not, shall be provided by the manufacturer of the equipment. Manufacturer shall provide the test equipment, demonstrate its use, and assist in the commissioning process as needed. Proprietary test equipment (and software) shall become the property of the owner upon completion of the commissioning process.

PART 3 – EXECUTION

3.1. GENERAL

A. The Trade Contractor shall complete all phases of work so the systems can be started, tested, balanced, and acceptance procedures undertaken. This includes the complete installation of all equipment, materials, pipe, wire, insulation, controls, etc., per the contract documents and related directives, clarifications, and change orders.

B. Restore all connections and equipment to operating conditions after testing has been completed.

3.2. PARTICIPATION IN ACCEPTANCE PROCEDURES

A. The Trade Contractor shall provide skilled technicians to startup and debug all systems within the project trade contracted work. These same technicians shall be made available to assist the Commissioning Authority in completing the commissioning program. Work schedules, time required for testing, etc., shall be requested by the Commissioning Authority and coordinated by the trade contractor. Trade Contractor shall ensure that the qualified technician(s) are available and present during the agreed upon schedules and of sufficient duration to complete the necessary tests, adjustments, and/or problem resolutions.

B. System performance problems and discrepancies may require additional technician time, Commissioning Authority time, reconstruction of systems, and/or replacement of system components. The additional technician time shall be made available for subsequent commissioning periods until the required system performance is obtained.

C. The Commissioning Authority reserves the right to question the appropriateness and qualifications of the technicians relative to each item of equipment, system, and/or sub-system. Qualifications of technicians shall include expert knowledge relative to the specific equipment involved and a willingness to work with the Commissioning Authority. Trade Contractor shall provide adequate documentation and tools to start-up and test the equipment, system, and/or sub-system.

3.3. DEFICIENCY RESOLUTION

A. In some systems, misadjustments, misapplied equipment, and/or deficient performance under varying loads will result in additional work being required to commission the systems. This work shall be completed under the direction of the Owner, with input from the trade contractor, equipment supplier, and Commissioning Authority. Whereas all members shall have input and the opportunity to discuss, debate, and work out problems, the Owner and/or CTDOT PM shall have final jurisdiction over any additional work done to achieve performance.

B. Corrective work shall be completed in a timely fashion to permit the completion of the commissioning process. Experimentation to demonstrate system performance may be permitted. If the Commissioning Authority deems the experimentation work to be ineffective or untimely as it relates to the commissioning process, the Commissioning Authority shall notify the Owner, indicating the nature of the problem, expected steps to be taken, and suggested deadline(s) for completion of activities. If the deadline(s) pass without resolution of the problem, the Owner reserves the right to obtain supplementary services and/or equipment to resolve the problem. Costs incurred to solve the problems in an expeditious manner shall be the trade contractor's responsibility.

3.4. ADDITIONAL COMMISSIONING

A. Additional commissioning activities may be required after system adjustments, replacements, etc., are completed. The trade contractor(s), suppliers, and Commissioning Authority shall include a reasonable reserve to complete this work as part of their trade contractual obligations.

3.5. SUSTAINING SYSTEM READINESS

A. Refer to Section 019110, General Commissioning Requirements for Pre-Functional Checklist requirements and expectations.

3.6. FUNCTIONAL PERFORMANCE TESTING

A. The trade contractor shall demonstrate to the Owner's Representative and the Cx Authority the performance of the following Electrical Systems to the performance level identified.

1. Electrical System:

a. System / Equipment to be tested:

1) Lighting Controls Systems

2) Emergency Generator

3) Automatic Transfer Switches

B. Detailed testing shall be performed on all installed equipment and systems to ensure that operation and performance conform to contract documents. All tests shall be witnessed by the Commissioning Authority. The following testing is required as part of the commissioning process:

1. Verification tests are comprised of a full range of checks and tests to determine that all components, equipment, systems, and interfaces between systems operate in accordance with contract documents. This includes all operating modes, interlocks, control responses, and specific responses to abnormal or emergency conditions.

3.7. RESPONSIBILITIES

A. General Trade Contractor / Construction Manager - General Construction Trade Representative

1. Assure acceptable representation, with the means and authority to prepare and coordinate execution of the electrical system commissioning program as described in the contract documents.
2. Attend commissioning meetings scheduled by the CA.
3. Coordinate inclusion of commissioning activities in the construction schedule.
4. Complete System Verification Checklists and manufacturer's pre-start checklists prior to scheduling pre-testing of the fire alarm system.
5. Monitor and respond to Resolution Tracking Forms distributed by the CA in order to expedite corrective actions necessary to achieve design intent.
6. Facilitate resolution of deficiencies identified by observation or performance testing.
7. Participate in the Functional Performance Tests as required to achieve design intent.
8. Participate in O&M Training as required by project specifications.

B. Electrical Trade Contractors: The commissioning responsibilities applicable to the trade contractor are as follows *(all references apply to commissioned equipment only)*:

1. Construction and Acceptance Phases
   a. Include the cost of commissioning in the trade contract price, if not yet let.
   b. In each purchase order or trade subcontract written, include requirements for submittal data, O&M data and training.
   c. Attend a commissioning scoping meeting and other necessary meetings scheduled by the CxA to facilitate the Cx process.
   d. Trade Contractors shall provide normal cut sheets and shop drawing submittals to the CxA of commissioned equipment.
   e. Provide additional requested documentation, prior to normal O&M manual submittals, to the CxA for development of start-up and functional testing procedures.
      1) Typically this will include detailed manufacturer installation and start-up, operating, troubleshooting and maintenance procedures, full details of any owner-contracted tests, full factory testing reports, if any, and full warranty information, including all responsibilities of the Owner to keep the warranty in force clearly identified. In addition, the installation and checkout materials that are actually shipped inside the equipment and the actual field checkout

sheet forms to be used by the factory or field technicians shall be submitted to the Commissioning Agent.

2) The Commissioning Agent may request further documentation necessary for the commissioning process.

3) This data request may be made prior to normal submittals.

f. Provide a copy of the O&M manuals submittals of commissioned equipment, through normal channels, to the CxA for review and approval.

g. Trade Contractors shall assist (along with the design engineers) in clarifying the operation and control of commissioned equipment in areas where the specifications, control drawings or equipment documentation is not sufficient for writing detailed testing procedures.

h. Provide assistance to the CxA in preparation of the specific functional performance test procedures as specified in the appropriate trade contract document section. Subs shall review test procedures to ensure feasibility, safety and equipment protection and provide necessary written alarm limits to be used during the tests.

i. Develop a full start-up and initial checkout plan using manufacturer's start-up procedures and the prefunctional checklists from the CxA. Submit manufacturer's detailed start-up procedures and the full start-up plan and procedures and other requested equipment documentation to CxA for review.

j. During the startup and initial checkout process, execute and document the electrical-related portions of the prefunctional checklists provided by the CxA for all commissioned equipment.

k. Perform and clearly document all completed startup and system operational checkout procedures, providing a copy to the CxA.

l. Address current A/E punch list items before functional testing. Air and water TAB shall be completed with discrepancies and problems remedied before functional testing of the respective air- or water-related systems.

m. Provide skilled technicians to execute starting of equipment and to execute the functional performance tests. Ensure that they are available and present during the agreed upon schedules and for sufficient duration to complete the necessary tests, adjustments and problem solving.

n. Perform functional performance testing under the direction of the CxA for specified equipment. Assist the CxA in interpreting the monitoring data, as necessary.

o. Correct deficiencies (differences between specified and observed performance) as interpreted by the CxA, CM/GC and A/E and retest the equipment.

p. Prepare O&M manuals according to the Contract Documents, including clarifying and updating the original sequences of operation to as-built conditions.

q. During construction, maintain as built redline drawings for all drawings and final CAD as-builts for trade contractor-generated coordination drawings. Update after completion of commissioning (excluding deferred testing). Prepare redline as-built drawings for all drawings and final as-builts for trade contractor-generated coordination drawings.

r. Provide training of the Owner's operating personnel as specified.

s. Coordinate with equipment manufacturers to determine specific requirements to maintain the validity of the warranty.

2. Warranty Period

a. Execute seasonal or deferred functional performance testing, witnessed by the CxA, according to the specifications.

b. Correct deficiencies and make necessary adjustments to O&M manuals and as-built drawings for applicable issues identified in any seasonal testing.

3.8. STARTUP

A. The trade contractors shall follow the start-up and initial checkout procedures listed in the Responsibilities list in this section and in section 019100. Division 26 has start-up responsibility and is required to complete systems and sub-systems so they are fully functional, meeting the design objectives of the Contract Documents. The commissioning procedures and functional testing do not relieve or lessen this responsibility or shift that responsibility partially to the commissioning agent or Owner.

B. Functional testing is intended to begin upon completion of a system. Functional testing may proceed prior to the completion of systems, or sub-systems at the discretion of the CxA and CM/GC. Beginning system testing before full completion does not relieve the Trade Contractor from fully completing the system, including all prefunctional checklists as soon as possible.

3.9. COMMISSIONING STATUS TRACKING

A. The following table represents the equipment that will be commissioned under this section. The Trade Contractor shall verify that the Tag designation as well as the number (count) of each unit listed is correct against those contained within the initial Contract Documents. This will be to ensure that the Trade Contractor's Bid contains all of the equipment required to be commissioned. At the time of the Bid proposal the Trade Contractor shall state that his bid incorporates all the equipment listed within the Contract Documents regardless if the following table incorporated all the designations or not. No additional cost associated with missed units shall be borne by this Trade Contract based upon initial Contract Documents. It will be the Trade Contractor's responsibility to ensure the unit commissioning costs have been clarified before the Trade Contract is executed and included in their base bid.

Project Name: Proj #:	Pre-Functional (PFC)					Start-Up (SU)				Post Startup Testing		Functional (FPT)			Notes
Electrical Tag Location/Service	Submittal Rev.	OM Received	Form Developed	% Complete, PFC	doc received	Form Received	Form Reviewed	% Complete, SU	doc received	% Complete, PST	doc received	Form Developed	% Complete, FPT	doc received	
Lighting Controls															
Daylight Controls															

END OF SECTION 26 08 00

SECTION 26 09 23 - LIGHTING CONTROL DEVICES

PART 1 - GENERAL

1.1 RELATED DOCUMENTS

A. Drawings and general provisions of the Trade Contract, including General and Supplementary Conditions and Division 01 Specification Sections, apply to this Section.

1.2 SUMMARY

A. Section Includes:

1. Time Switches
2. Photoelectric switches.
3. Indoor occupancy sensors.
4. Lighting contactors.
5. Emergency shunt relays.

B. Related Requirements:

1. Division 26 Section "Wiring Devices" for wall-box dimmers and manual light switches.

1.3 ACTION SUBMITTALS

A. Product Data: For each type of product.

B. Shop Drawings: Show installation details for occupancy and light-level sensors.

1. Interconnection diagrams showing field-installed wiring.
2. Include diagrams for power, signal, and control wiring.

1.4 INFORMATIONAL SUBMITTALS

A. Field quality-control reports.

1.5 CLOSEOUT SUBMITTALS

A. Operation and Maintenance Data: For each type of lighting control device to include in emergency, operation, and maintenance manuals.

PART 2 - PRODUCTS

2.1 TIME SWITCHES

A. Manufacturers: Subject to compliance with requirements, provide products by one of the following:

1. Cooper Industries, Inc.

2. Intermatic, Inc.

3. Invensys Controls.

4. Leviton Mfg. Company Inc.

5. NSi Industries LLC; TORK Products.

B. Electronic Time Switches: Solid state, programmable, with alphanumeric display; complying with UL 917.

1. Listed and labeled as defined in NFPA 70, by a qualified testing agency, and marked for intended location and application.

2. Contact Configuration: SPST.

3. Contact Rating: 20-A ballast load, 120-/240-V ac.

4. Programs: Minimum of three channels; each channel is individually programmable with eight on-off set points on a 24-hour schedule.

5. Circuitry: Allow connection of a photoelectric relay as substitute for on-off function of a program on selected channels.

6. Astronomic Time: All channels.

7. Automatic daylight savings time changeover.

8. Battery Backup: Not less than seven days reserve, to maintain schedules and time clock.

2.2 OUTDOOR PHOTOELECTRIC SWITCHES

A. Manufacturers: Subject to compliance with requirements, available manufacturers offering products that may be incorporated into the Work include, but are not limited to, the following:

1. Cooper Industries, Inc.

2. Intermatic, Inc.

3. NSi Industries LLC; TORK Products.

4. Tyco Electronics; ALR Brand.

B. Description: Solid state, with SPST dry contacts rated for 1800-VA tungsten or 1000-VA inductive, to operate connected relay, contactor coils, or microprocessor input; complying with UL 773A.

1. Listed and labeled as defined in NFPA 70, by a qualified testing agency, and marked for intended location and application.

2. Light-Level Monitoring Range: 1.5 to 10 fc (16.14 to 108 lux), with an adjustment for turn-on and turn-off levels within that range, and a directional lens in front of the photocell to prevent fixed light sources from causing turn-off.

3. Time Delay: Fifteen second minimum, to prevent false operation.

4. Surge Protection: Metal-oxide varistor.

5. Mounting: Twist lock complies with NEMA C136.10, with base-and-stem mounting or stem-and-swivel mounting accessories as required to direct sensor to the north sky exposure.

2.3 INDOOR OCCUPANCY SENSORS

A. Manufacturers: Subject to compliance with requirements, available manufacturers offering products that may be incorporated into the Work include, but are not limited to, the following:

1. Cooper Industries, Inc.

2. Hubbell Building Automation, Inc.

3. Lightolier Controls.

4. Lithonia Lighting; Acuity Lighting Group, Inc.

5. Lutron Electronics Co., Inc.

6. NSi Industries LLC; TORK Products.

7. Sensor Switch, Inc.

8. Square D; a brand of Schneider Electric.

9. Watt Stopper.

B. General Requirements for Sensors: Wall- or ceiling-mounted, solid-state indoor occupancy sensors with a separate power pack.

1. Listed and labeled as defined in NFPA 70, by a qualified testing agency, and marked for intended location and application.

2. Operation: Unless otherwise indicated, turn lights on when coverage area is occupied, and turn them off when unoccupied; with a time delay for turning lights off, adjustable over a minimum range of 1 to 15 minutes.

3. Sensor Output: Contacts rated to operate the connected relay, complying with UL 773A. Sensor is powered from the power pack.

4. Power Pack: Dry contacts rated for 20-A ballast load at 120- and 277-V ac, for 13-A tungsten at 120-V ac, and for 1 hp at 120-V ac. Sensor has 24-V dc, 150-mA, Class 2 power source, as defined by NFPA 70.

5. Mounting:

   a. Sensor: Suitable for mounting in any position on a standard outlet box.
   b. Relay: Externally mounted through a 1/2-inch (13-mm) knockout in a standard electrical enclosure.
   c. Time-Delay and Sensitivity Adjustments: Recessed and concealed behind hinged door.

6. Indicator: Digital display, to show when motion is detected during testing and normal operation of sensor.

7. Bypass Switch: Override the "on" function in case of sensor failure.

8. Automatic Light-Level Sensor: Adjustable from 2 to 200 fc (21.5 to 2152 lux); turn lights off when selected lighting level is present.

C. Dual-Technology Type: Ceiling mounted; detect occupants in coverage area using PIR and ultrasonic detection methods. The particular technology or combination of technologies that control on-off functions is selectable in the field by operating controls on unit.

1. Sensitivity Adjustment: Separate for each sensing technology.

2. Detector Sensitivity: Detect occurrences of 6-inch- (150-mm-) minimum movement of any portion of a human body that presents a target of not less than 36 sq. in. (232 sq. cm), and detect a person of average size and weight moving not less than 12 inches (305 mm) in either a horizontal or a vertical manner at an approximate speed of 12 inches/s (305 mm/s).

3. Detection Coverage (Standard Room): Detect occupancy anywhere within a circular area of 1000 sq. ft. (93 sq. m) when mounted on a 96-inch- (2440-mm-) high ceiling.

2.4 SWITCHBOX-MOUNTED OCCUPANCY SENSORS

A. Manufacturers: Subject to compliance with requirements, available manufacturers offering products that may be incorporated into the Work include, but are not limited to, the following:

1. Cooper Industries, Inc.

2. Hubbell Building Automation, Inc.

3. Lightolier Controls.

4. Lithonia Lighting; Acuity Lighting Group, Inc.

5. Lutron Electronics Co., Inc.

6. NSi Industries LLC; TORK Products.

7. Sensor Switch, Inc.

8. Square D; a brand of Schneider Electric.

9. Watt Stopper.

B. General Requirements for Sensors: Automatic-wall-switch occupancy sensor, suitable for mounting in a single gang switchbox.

1. Listed and labeled as defined in NFPA 70, by a qualified testing agency, and marked for intended location and application.

2. Operating Ambient Conditions: Dry interior conditions, 32 to 120 deg F (0 to 49 deg C).

3. Switch Rating: Not less than 1200-VA fluorescent at 277 V.

4. Standard Range: 180-degree field of view, field adjustable from 180 to 40 degrees; with a minimum coverage area of 2100 sq. ft (196 sq. m).

5. Sensing Technology: Dual technology - PIR and ultrasonic.

6. Switch Type: SP, field selectable automatic "on," or manual "on" automatic "off."

7. Voltage: Dual voltage, 120 and 277 V.

8. Ambient-Light Override: Concealed, field-adjustable, light-level sensor from 10 to 150 fc (108 to 1600 lux). The switch prevents the lights from turning on when the light level is higher than the set point of the sensor.

9. Concealed, field-adjustable, "off" time-delay selector at up to 30 minutes.

10. Concealed "off" time-delay selector at 30 seconds, and 5, 10, and 20 minutes.

11. Adaptive Technology: Self-adjusting circuitry detects and memorizes usage patterns of the space and helps eliminate false "off" switching.

2.5 HIGH-BAY OCCUPANCY SENSORS

A. Manufacturers: Subject to compliance with requirementsavailable manufacturers offering products that may be incorporated into the Work include, but are not limited to, the following:

1. Cooper Industries, Inc.

2. Hubbell Building Automation, Inc.

3. Lightolier Controls.

4. Lithonia Lighting; Acuity Lighting Group, Inc.

5. Lutron Electronics Co., Inc.

6. NSi Industries LLC; TORK Products.

7. Sensor Switch, Inc.

8. Square D; a brand of Schneider Electric.

9. Watt Stopper.

B. General Description: Solid-state unit. The unit is designed to operate with the lamp and ballasts indicated.

1. Listed and labeled as defined in NFPA 70, by a qualified testing agency, and marked for intended location and application.

2. Operation: Turn lights on when coverage area is occupied, and to half-power when unoccupied; with a time delay for turning lights to half-power that is adjustable over a minimum range of 1 to 16 minutes.

3. Continuous Lamp Monitoring: When lamps are dimmed continuously for 24 hours, automatically turn lamps on to full power for 15 minutes for every 24 hours of continuous dimming.

4. Operating Ambient Conditions: 32 to 149 deg F (0 to 65 deg C).

5. Mounting: Threaded pipe.

6. Time-Delay and Sensitivity Adjustments: Recessed and concealed behind hinged door.

7. Detector Technology: PIR.

8. Power and dimming control from the lighting fixture ballast that has been modified to include the dimming capacitor and MyzerPORT option.

C. Detector Coverage: User selectable by interchangeable PIR lenses, suitable for mounting heights from 12 to 50 feet (3.7 to 15.2 m).

D. Accessories: Obtain manufacturer's installation and maintenance kit with laser alignment tool for sensor positioning and power port connectors.

2.6 LIGHTING CONTACTORS

A. Manufacturers: Subject to compliance with requirements, provide products by one of the following:

1. ASCO Power Technologies, LP; a division of Emerson Electric Co.

2. Eaton Corporation.

3. General Electric Company; GE Consumer & Industrial - Electrical Distribution; Total Lighting Control.

4. Square D; a brand of Schneider Electric.

5. Siemens.

B. Description: Electrically operated and mechanically held, combination-type lighting contactors with nonfused disconnect, complying with NEMA ICS 2 and UL 508.

1. Current Rating for Switching: Listing or rating consistent with type of load served, including tungsten filament, inductive, and high-inrush ballast (ballast with 15 percent or less total harmonic distortion of normal load current).

2. Fault Current Withstand Rating: Equal to or exceeding the available fault current at the point of installation.

3. Enclosure: Comply with NEMA 250.

2.7 EMERGENCY SHUNT RELAY

A. Manufacturers: Subject to compliance with requirements, available manufacturers offering products that may be incorporated into the Work include, but are not limited to, the following:

1. Lighting Control and Design; Acuity Lighting Group, Inc.

2. Watt Stopper.

B. Description: Normally closed, electrically held relay, arranged for wiring in parallel with manual or automatic switching contacts; complying with UL 924.

1. Coil Rating: 277 V.

PART 3 - EXECUTION

3.1 SENSOR INSTALLATION

A. Coordinate layout and installation of ceiling-mounted devices with other construction that penetrates ceilings or is supported by them, including light fixtures, HVAC equipment, smoke detectors, fire-suppression systems, and partition assemblies.

B. Install and aim sensors in locations to achieve not less than 90 percent coverage of areas indicated. Do not exceed coverage limits specified in manufacturer's written instructions.

3.2 CONTACTOR INSTALLATION

A. Mount electrically held lighting contactors with elastomeric isolator pads to eliminate structure-borne vibration, unless contactors are installed in an enclosure with factory-installed vibration isolators.

3.3 WIRING INSTALLATION

A. Wiring Method: Comply with Division 26 Section "Low-Voltage Electrical Power Conductors and Cables".

B. Wiring within Enclosures: Comply with NECA 1. Separate power-limited and nonpower-limited conductors according to conductor manufacturer's written instructions.

C. Size conductors according to lighting control device manufacturer's written instructions unless otherwise indicated.

D. Splices, Taps, and Terminations: Make connections only on numbered terminal strips in junction, pull, and outlet boxes; terminal cabinets; and equipment enclosures.

3.4 IDENTIFICATION

A. Identify components and power and control wiring according to Division 26 Section "Identification for Electrical Systems."

1. Identify controlled circuits in lighting contactors.

2. Identify circuits or luminaires controlled by photoelectric and occupancy sensors at each sensor.

3.5 FIELD QUALITY CONTROL

A. Perform the following tests and inspections:

1. Operational Test: After installing time switches and sensors, and after electrical circuitry has been energized, start units to confirm proper unit operation.

2. Test and adjust controls and safeties. Replace damaged and malfunctioning controls and equipment.

B. Lighting control devices will be considered defective if they do not pass tests and inspections.

C. Prepare test and inspection reports.

3.6 ADJUSTING

A. Occupancy Adjustments: When requested within 12 months from date of Substantial Completion, provide on-site assistance in adjusting sensors to suit actual occupied conditions. Provide up to two visits to Project during other-than-normal occupancy hours for this purpose.

1. For occupancy and motion sensors, verify operation at outer limits of detector range. Set time delay to suit Owner's operations.

2. Align high-bay occupancy sensors using manufacturer's laser aiming tool.

3.7 DEMONSTRATION

A. Train Owner's maintenance personnel to adjust, operate, and maintain lighting control devices.

END OF SECTION 26 09 23

SECTION 26 12 00 - MEDIUM-VOLTAGE TRANSFORMERS

PART 1 - GENERAL

1.1 RELATED DOCUMENTS

A. Drawings and general provisions of the Trade Contract, including General and Supplementary Conditions and Division 01 Specification Sections, apply to this Section.

1.2 SUMMARY

A. This Section includes the following types of transformers with medium-voltage primaries:

1. Liquid-filled unit substation transformers.

1.3 DEFINITIONS

A. NETA ATS: Acceptance Testing Specification.

1.4 ACTION SUBMITTALS

A. Product Data: Include rated nameplate data, capacities, weights, dimensions, minimum clearances, installed devices and features, location of each field connection, and performance for each type and size of transformer indicated.

B. Shop Drawings: Diagram power and control wiring.

1.5 INFORMATIONAL SUBMITTALS

A. Coordination Drawings: Floor plans, drawn to scale, on which the following items are shown and coordinated with each other, based on input from installers of the items involved:

1. Underground primary and secondary conduit stub-up location.

2. Dimensioned concrete base, outline of transformer, and required clearances.

3. Ground rod and grounding cable locations.

4. Dimensioned Outline Drawings of Equipment Unit: Identify center of gravity and locate and describe mounting and anchorage provisions.

5. Detailed description of equipment anchorage devices on which the certification is based and their installation requirements.

B. Source quality-control test reports.

C. Field quality-control test reports.

D. Follow-up service reports.

1.6 CLOSEOUT SUBMITTALS

A. Operation and Maintenance Data: For transformer and accessories to include in emergency, operation, and maintenance manuals.

1.7 QUALITY ASSURANCE

A. Product Options: Drawings indicate size, profiles, and dimensional requirements of transformers and are based on the specific system indicated. Refer to Division 01 Section "Product Requirements."

B. Electrical Components, Devices, and Accessories: Listed and labeled as defined in NFPA 70, Article 100, by a testing agency acceptable to authorities having jurisdiction, and marked for intended use.

C. Comply with IEEE C2.

D. Comply with ANSI C57.12.10, ANSI C57.12.28, IEEE C57.12.70, and IEEE C57.12.80.

E. Comply with NFPA 70.

1.8 DELIVERY, STORAGE, AND HANDLING

A. Store transformers protected from weather and so condensation will not form on or in units. Provide temporary heating according to manufacturer's written instructions.

1.9 PROJECT CONDITIONS

A. Service Conditions: IEEE C37.121, usual service conditions except for the following:

1. Exposure to significant solar radiation.
2. Exposure to fumes, vapors, or dust.
3. Exposure to hot and humid climate or to excessive moisture, including steam, salt spray, and dripping water.
4. Exposure to excessively high or low temperatures.

1.10 COORDINATION

A. Coordinate size and location of concrete bases. Cast anchor-bolt inserts into bases. Concrete, reinforcement, and formwork requirements are specified in Division 03.

B. Coordinate installation of louvers, doors, spill retention areas, and sumps. Coordinate installation so no piping or conduits are installed in space allocated for medium-voltage transformers except those directly associated with transformers.

PART 2 - PRODUCTS

2.1 MANUFACTURERS

A. Basis-of-Design Product: Subject to compliance with requirements, provide ABB Inc., or comparable product by one of the following:

1. Cooper Industries; Cooper Power Systems Division.
2. Cutler-Hammer.
3. GE Electrical Distribution & Control.
4. Siemens Energy & Automation, Inc.
5. Square D; Schneider Electric.

2.2 LIQUID-FILLED DISTRIBUTION AND POWER TRANSFORMERS

A. Description: IEEE C57.12.00 and UL 1062, liquid-filled, 2-winding transformers.

B. Insulating Liquid: Mineral oil, complying with ASTM D 3487, Type II, and tested according to ASTM D 117.

C. Insulation Temperature Rise: 65 deg C, based on an average ambient temperature of 30 deg C over 24 hours with a maximum ambient temperature of 40 deg C.

D. Basic Impulse Level: 95 kV.

E. Full-Capacity Voltage Taps: Four nominal 2.5 percent taps, 2 above and 2 below rated primary voltage; with externally operable tap changer for de-energized use and with position indicator and padlock hasp.

F. Cooling System: Class ONAN, self-cooled.

G. Sound level may not exceed 56 dB.

H. Impedance: 5.75 percent.

I. Windings: Copper.

J. Finish: Painted Manufacturer’s standard enamel ANSI 61 Gray.

K. Accessories: Grounding pads, lifting lugs, and provisions for jacking under base. Transformers shall have a steel base and frame allowing use of pipe rollers in any direction, and an insulated,

low-voltage, neutral bushing with removable ground strap. Include the following additional accessories:

1. Radiator.

2. Liquid-level gage.

3. Pressure-vacuum gage.

4. Liquid temperature indicator.

5. Drain and filter valves.

6. Pressure relief device.

2.3 IDENTIFICATION DEVICES

A. Nameplates: Engraved, laminated-plastic or metal nameplate for each transformer, mounted with corrosion-resistant screws. Nameplates and label products are specified in Division 26 Section "Identification for Electrical Systems."

2.4 SOURCE QUALITY CONTROL

A. Factory Tests: Perform design and routine tests according to standards specified for components. Conduct transformer tests according to IEEE C57.12.90.

B. Factory Tests: Perform the following factory-certified tests on each transformer:

1. Resistance measurements of all windings on rated-voltage connection and on tap extreme connections.

2. Ratios on rated-voltage connection and on tap extreme connections.

3. Polarity and phase relation on rated-voltage connection.

4. No-load loss at rated voltage on rated-voltage connection.

5. Excitation current at rated voltage on rated-voltage connection.

6. Impedance and load loss at rated current on rated-voltage connection and on tap extreme connections.

7. Applied potential.

8. Induced potential.

9. Owner will witness all required factory tests. Notify CTDOT and MNR at least 5 weeks before date of tests and indicate their approximate duration.

PART 3 - EXECUTION

3.1 EXAMINATION

A. Examine areas and conditions for compliance with requirements for medium-voltage transformers.

B. Examine roughing-in of conduits and grounding systems to verify the following:

1. Wiring entries comply with layout requirements.

2. Entries are within conduit-entry tolerances specified by manufacturer and no feeders will have to cross section barriers to reach load or line lugs.

C. Examine walls, floors, roofs, and concrete bases for suitable mounting conditions where transformers will be installed.

D. Verify that ground connections are in place and that requirements in Division 26 Section "Grounding and Bonding for Electrical Systems" have been met. Maximum ground resistance shall be 5 ohms at location of transformer.

E. Proceed with installation only after unsatisfactory conditions have been corrected.

3.2 INSTALLATION

A. Install transformers on concrete bases.

1. Anchor transformers to concrete bases according to manufacturer's written instructions, seismic codes at Project, and requirements in Division 26 Section "Hangers and Supports for Electrical Systems."

2. Construct concrete bases of dimensions indicated, but not less than 4 inches (100 mm) larger in both directions than supported unit and 4 inches (100 mm) high.

3. Use 3000-psi (20.7-MPa), 28-day compressive-strength concrete and reinforcement as specified in Division 03 Section "Cast-in-Place Concrete."

4. Install dowel rods to connect concrete bases to concrete floor. Unless otherwise indicated, install dowel rods on 18-inch (450-mm) centers around full perimeter of base.

5. Install epoxy-coated anchor bolts, for supported equipment, that extend through concrete base and anchor into structural concrete floor.

6. Place and secure anchorage devices. Use supported equipment manufacturer's setting drawings, templates, diagrams, instructions, and directions furnished with items to be embedded.

7. Tack-weld or bolt transformers to channel-iron sills embedded in concrete bases. Install sills level and grout flush with floor or base.

B. Maintain minimum clearances and workspace at equipment according to manufacturer's written instructions and NFPA 70.

3.3 IDENTIFICATION

A. Identify field-installed wiring and components and provide warning signs as specified in Division 26 Section "Identification for Electrical Systems."

3.4 CONNECTIONS

A. Ground equipment according to Division 26 Section "Grounding and Bonding for Electrical Systems."

B. Connect wiring according to Division 26 Section "Low-Voltage Electrical Power Conductors and Cables" and Division 26 Section “Site Medium Voltage Cables.”

3.5 FIELD QUALITY CONTROL

A. Manufacturer's Field Service: Engage a factory-authorized service representative to inspect, test, and adjust field-assembled components and equipment installation, including connections, and to assist in field testing. Report results in writing.

B. Perform the following field tests and inspections and prepare test reports:

1. After installing transformers but before primary is energized, verify that grounding system at substation is tested at specified value or less.

2. After installing transformers and after electrical circuitry has been energized, test for compliance with requirements.

3. Perform visual and mechanical inspection and electrical test stated in NETA ATS. Certify compliance with test parameters.

4. Test and adjust controls and safeties. Replace damaged and malfunctioning controls and equipment.

C. Remove and replace malfunctioning units and retest as specified above.

D. Test Reports: Prepare written reports to record the following:

1. Test procedures used.

2. Test results that comply with requirements.

3. Test results that do not comply with requirements and corrective actions taken to achieve compliance with requirements.

3.6 FOLLOW-UP SERVICE

A. Voltage Monitoring and Adjusting: If requested by Owner, perform the following voltage monitoring after Substantial Completion but not more than six months after Final Acceptance:

1. During a period of normal load cycles as evaluated by Owner, perform seven days of three-phase voltage recording at secondary terminals of each transformer. Use voltmeters with calibration traceable to National Institute of Science and Technology standards and with a chart speed of not less than 1 inch (25 mm) per hour. Voltage unbalance greater than 1 percent between phases, or deviation of any phase voltage from nominal value by more than plus or minus 5 percent during test period, is unacceptable.

2. Corrective Actions: If test results are unacceptable, perform the following corrective actions, as appropriate:

a. Adjust transformer taps.
b. Prepare written request for voltage adjustment by electric utility.

3. Retests: After corrective actions have been performed, repeat monitoring until satisfactory results are obtained.

4. Report: Prepare written report covering monitoring and corrective actions performed.

B. Infrared Scanning: Perform as specified in Division 26 Section "Medium-Voltage Switchgear."

END OF SECTION 26 12 00

SECTION 26 13 00 - MEDIUM-VOLTAGE SWITCHGEAR

PART 1 - GENERAL

1.1 RELATED DOCUMENTS

A. Drawings and general provisions of the Contract, including General and Supplementary Conditions and Division 01 Specification Sections, apply to this Section.

1.2 SUMMARY

A. This Section includes metal-enclosed interrupter switchgear with the following optional components, features, and accessories:

1. Copper, silver-plated main bus at connection points.

2. Communication modules.

3. Analog instruments.

4. Relays.

5. Surge arresters.

6. Fungus proofing.

1.3 DEFINITIONS

A. ATS: Acceptance Testing Specifications.

B. GFCI: Ground-Fault Circuit Interrupter.

1.4 SUBMITTALS

A. Product Data: For each type of switchgear and related equipment, include the following:

1. Rated capacities, operating characteristics, furnished specialties, and accessories for individual interrupter switches.

2. Time-current characteristic curves for overcurrent protective devices, including fusible devices.

B. Shop Drawings: For each type of switchgear and related equipment, include the following:

1. Dimensioned plans, elevations, sections, and details, including required clearances and service space around equipment. Show method of field assembly and location and size of each field connection. Include the following:

   a. Tabulation of installed devices with features and ratings.
   b. Outline and general arrangement drawing showing dimensions, shipping sections, and weights of each assembled section.
   c. Drawing of cable termination compartments showing preferred locations for conduits and indicating space available for cable terminations.
   d. Floor plan drawing showing locations for anchor bolts and leveling channels.
   e. Current ratings of buses.
   f. Short-time and short-circuit ratings of switchgear assembly.
   g. Nameplate legends.

2. Wiring Diagrams: For each type of switchgear and related equipment, include the following:

   a. Power, signal, and control wiring.
   b. Three-line diagrams of secondary circuits showing device terminal numbers and internal diagrams.
   c. Schematic control diagrams.
   d. Diagrams showing connections of component devices and equipment.

C. Coordination Drawings: Floor plans showing dimensioned layout, required working clearances, and required area above and around switchgear where piping and ducts are prohibited. Show switchgear layout and relationships between components and adjacent structural and mechanical elements. Show support locations, type of support, and weight on each support. Identify field measurements.

D. Source quality-control test reports.

E. Field quality-control test reports.

F. Operation and Maintenance Data: For switchgear and switchgear components to include in emergency, operation, and maintenance manuals. In addition to items specified in Division 01 Section "Operation and Maintenance Data," include the following:

1. Manufacturer's written instructions for testing and adjusting overcurrent protective devices.

2. Time-current curves, including selectable ranges for each type of overcurrent protective device.

1.5 QUALITY ASSURANCE

A. Source Limitations: Obtain each type of switchgear and associated components through one source from a single manufacturer.

B. Product Options: Drawings indicate size, profiles, and dimensional requirements of switchgear and are based on the specific system indicated. Refer to Division 01 Section "Product Requirements."

C. Electrical Components, Devices, and Accessories: Listed and labeled as defined in NFPA 70, Article 100, by a testing agency acceptable to authorities having jurisdiction, and marked for intended use.

D. Comply with IEEE C2.

1.6 DELIVERY, STORAGE, AND HANDLING

A. Deliver in sections of lengths that can be moved past obstructions in delivery path as indicated.

B. Store switchgear indoors in clean dry space with uniform temperature to prevent condensation. Protect switchgear from exposure to dirt, fumes, water, corrosive substances, and physical damage.

C. If stored in areas subjected to weather, cover switchgear to provide protection from weather, dirt, dust, corrosive substances, and physical damage. Remove loose packing and flammable materials from inside switchgear; install electric heating (250 W per section) to prevent condensation.

1.7 PROJECT CONDITIONS

A. Environmental Limitations: Rate equipment for continuous operation at indicated ampere ratings for the following conditions:

1. Ambient temperature not exceeding 122 deg F (50 deg C).

B. Product Selection for Restricted Space: Drawings indicate maximum dimensions for switchgear, including clearances between switchgear and adjacent surfaces and other items. Comply with indicated maximum dimensions.

1.8 COORDINATION

A. Coordinate layout and installation of switchgear and components with other construction including conduit, piping, equipment, and adjacent surfaces. Maintain required clearances for workspace and equipment access doors and panels.

B. Coordinate size and location of concrete bases. Concrete, reinforcement, and formwork requirements are specified in Division 03.

1.9 EXTRA MATERIALS

A. Furnish extra materials described below that match products installed and that are packaged with protective covering for storage and identified with labels describing contents.

1. Fuses: Three of each type and rating used. Include spares for future transformers, control power circuits, and fusible devices.

2. Touchup Paint: Three containers of paint matching enclosure finish, each 0.5 pint (250 mL).

B. Maintenance Tools: Furnish tools and miscellaneous items required for interrupter switchgear test, inspection, maintenance, and operation. Include the following:

1. Fuse-handling tool.

2. Extension rails, lifting device, transport or dockable dolly or mobile lift, and all other items necessary to remove circuit breaker from housing and transport to remote location.

PART 2 - PRODUCTS

2.1 MANUFACTURED UNITS

A. Description: Factory assembled and tested, and complying with IEEE C37.20.1.

B. Ratings: Suitable for application in 3-phase, 60-Hz, solidly grounded-neutral system.

C. System Voltage: 13.8 kV nominal; 15 kV maximum.

2.2 METAL-ENCLOSED INTERRUPTER SWITCHGEAR

A. Basis-of-Design Product: Subject to compliance with requirements, provide Eaton Corporation; Cutler-Hammer Products, MVS Load Interrupter Switchgear., or comparable product by one of the following:

1. ABB Control, Inc.

2. S&C Electric Company.

3. Siemens Energy & Automation, Inc.

4. Square D; Schneider Electric.

B. Comply with IEEE C37.20.3.

C. Comply with IEEE C37.20.7. Provide arc-resistant switchgear, Type 2C.

D. Design Level of Available-Source Fault Current: Integrated short-circuit rating consistent with value of fault current indicated.

E. Ratings: Comply with standard ratings designated in IEEE C37.20.3 for maximum-rated voltage specified.

1. Main-Bus Rating: 600 A, continuous.

F. Interrupter Switches: Stationary, gang operated, and suitable for application at maximum short-circuit rating of integrated switchgear assembly.

1. Rating: 600-A continuous duty and load break.

2. Duty-Cycle, Fault Closing: 40,000 asymmetrical A.

3. Switch Action: No external arc and no significant quantities of ionized gas released into the enclosure.

4. Switch Construction: Supported entirely by interior framework of structure, with copper switchblades and stored-energy operating mechanism.

5. Phase Barriers: Full length of switchblades and fuses for each pole; designed for easy removal; allow visual inspection of switch components if barrier is in place.

6. Protective Shields: Cover live components and terminals.

7. Fuses: De-energized if switch is open.

G. Mechanical Interlock: Prevent opening switch compartment door unless switchblades are open, and prevent closing switch if door is open.

H. Window: Permit viewing switchblade positions if door is closed.

I. Power Fuses: Comply with the following and with applicable requirements in NEMA SG 2:

1. Indicator: Integral with each fuse to indicate when it has blown.

2. Mounting: Positively held in position with provision for easy removal and replacement from front without special tools.

3. Current-Limiting Fuses: Full-range, fast-replaceable, current-limiting type that will operate without explosive noise or expulsion of gas, vapor, or foreign matter from tube.

4. Expulsion Fuses: Furnished in disconnect-type mountings and renewable with replacement fuse units. Gases emitted on interruption are controlled and silenced by chambers designed for that purpose.

2.3 FABRICATION

A. Outdoor Enclosure: Galvanized steel, weatherproof construction; integral structural-steel base frame with factory-applied asphaltic undercoating.

1. Each compartment shall have the following features:

a. Structural design and anchorage adequate to resist loads imposed by 125-mph (200-km/h) wind.
b. Space heater operating at one-half or less of rated voltage, sized to prevent condensation.

c. Louvers equipped with insect and rodent screen and filter, and arranged to permit air circulation while excluding rodents and exterior dust.
d. Hinged front door with locking provisions.
e. Interior light with switch.
f. Weatherproof GFCI duplex receptacle.
g. Power for heaters, lights, and receptacles to be provided as indicated.

B. Finish: Manufacturer's ANSI 61 gray finish over rust-inhibiting primer on phosphatizing-treated metal surfaces.

C. Bus Transition Unit: Arranged to suit bus and adjacent units.

D. Incoming-Line Unit: Arranged to suit incoming line.

E. Outgoing Feeder Units: Arranged to suit distribution feeders.

F. Auxiliary Compartments: Arranged to suit house meters, relays, controls, and auxiliary equipment; isolated from medium-voltage components.

G. Key Interlocks: Arranged to effect interlocking schemes indicated.

2.4 COMPONENTS

A. Main Bus: Copper, silver plated at connection points; full length of switchgear.

B. Ground Bus: Copper, silver plated or copper, tin plated; minimum size 1/4 by 2 inches (6 by 50 mm); full length of switchgear.

C. Bus Insulation: Covered with flame-retardant insulation.

D. Instrument Transformers: Comply with IEEE C57.13.

1. Potential Transformers: Secondary voltage rating of 120 V and NEMA accuracy class of 0.3 with burdens of W, X, and Y.

2. Current Transformers: Burden and accuracy class suitable for connected relays, meters, and instruments.

E. Multifunction Digital-Metering Monitor: Microprocessor-based unit suitable for three- or four-wire systems, listed and labeled by an NRTL, and with the following features:

1. Inputs from sensors or 5-A current-transformer secondaries, and potential terminals rated to 600 V.

2. Switch-selectable digital display with the following features:

a. Phase Currents, Each Phase: Plus or minus 1 percent.
b. Phase-to-Phase Voltages, Three Phase: Plus or minus 1 percent.
c. Phase-to-Neutral Voltages, Three Phase: Plus or minus 1 percent.
d. Three-Phase Real Power: Plus or minus 2 percent.
e. Three-Phase Reactive Power: Plus or minus 2 percent.

f. Power Factor: Plus or minus 2 percent.
g. Frequency: Plus or minus 0.5 percent.
h. Integrated Demand, with Demand Interval Selectable from 5 to 60 Minutes: Plus or minus 2 percent.
i. Accumulated energy, in megawatt hours (joules), plus or minus 2 percent; stored values unaffected by power outages for up to 72 hours.

3. Communications module suitable for remote monitoring of meter quantities and functions. Interface communication and metering requirements according to Division 26 Section "Electrical Power Monitoring and Control."

4. Mounting: Display and control unit that is flush or semiflush mounted in instrument compartment door.

F. Relays: Comply with IEEE C37.90, integrated digital type; with test blocks and plugs.

G. Surge Arresters: Distribution class, metal-oxide-varistor type. Comply with NEMA LA 1.

1. Install in cable termination compartments in each phase of circuit.

2. Coordinate rating with circuit voltage.

H. Fungus Proofing: Permanent fungicidal treatment for switchgear interior, including instruments and instrument transformers.

I. Control Wiring: Factory installed, complete with bundling, lacing, and protection; and complying with the following:

1. Flexible conductors for No. 8 AWG and smaller, for conductors across hinges, and for conductors for interconnections between shipping units.

2. Conductors sized according to NFPA 70 for duty required.

2.5 IDENTIFICATION

A. Materials: Refer to Division 26 Section "Identification for Electrical Systems." Identify units, devices, controls, and wiring.

2.6 SOURCE QUALITY CONTROL

A. Before shipment of equipment, perform the following tests and prepare test reports:

1. Production tests on circuit breakers according to ANSI C37.09.

2. Production tests on completed switchgear assembly according to IEEE C37.20.2.

B. Assemble switchgear and equipment in manufacturer's plant and perform the following:

1. Functional tests of all relays, instruments, meters, and control devices by application of secondary three-phase voltage to voltage circuits and injection of current in current transformer secondary circuits.

2. Functional test of all control and trip circuits. Connect test devices into circuits to simulate operation of controlled remote equipment such as circuit-breaker trip coils, close coils, and auxiliary contacts. Test proper operation of relay targets.

C. Prepare equipment for shipment.

1. Provide suitable crating, blocking, and supports so equipment will withstand expected domestic shipping and handling shocks and vibration.

2. Weatherproof equipment for shipment. Close connection openings to prevent entrance of foreign material during shipment and storage.

2.7 FACTORY FINISHES

A. Finish: Manufacturer's ANSI 61 gray color finish applied to equipment before shipping.

PART 3 - EXECUTION

3.1 EXAMINATION

A. Examine elements and surfaces to receive switchgear for compliance with requirements for installation tolerances, required clearances, and other conditions affecting performance.

1. Proceed with installation only after unsatisfactory conditions have been corrected.

3.2 INSTALLATION

A. Anchor switchgear assembly to 4-inch (100-mm), channel-iron sill embedded in concrete base and attach by bolting.

1. Sills: Select to suit switchgear; level and grout flush into concrete base.

2. Concrete Bases: 4 inches (100 mm) high, reinforced, with chamfered edges. Extend base no less than 3 inches (75 mm) in all directions beyond the maximum dimensions of switchgear, unless otherwise indicated or unless required for seismic anchor support. Construct concrete bases according to Division 26 Section "Hangers and Supports for Electrical Systems."

B. Temporary Lifting Provisions: Remove temporary lifting eyes, channels, and brackets and temporary blocking of moving parts from switchgear units and components.

3.3 IDENTIFICATION

A. Identify field-installed conductors, interconnecting wiring, and components; provide warning signs as specified in Division 26 Section "Identification for Electrical Systems."

B. Diagram and Instructions:

1. Frame under clear acrylic plastic on front of switchgear.

   a. Operating Instructions: Printed basic instructions for switchgear, including control and key-interlock sequences and emergency procedures.
   b. System Power Riser Diagrams: Depict power sources, feeders, distribution components, and major loads.

2. Storage for Maintenance: Include a rack or holder, near the operating instructions, for a copy of maintenance manual.

3.4 CONNECTIONS

A. Cable terminations at switchgear are specified in Division 26 Section "Medium-Voltage Cables."

B. Tighten bus joints, electrical connectors, and terminals according to manufacturer's published torque-tightening values.

C. Ground equipment according to Division 26 Section "Grounding and Bonding for Electrical Systems."

D. Connect wiring according to Division 26 Sections "Low-Voltage Electrical Power Conductors and Cables" and "Site-Medium-Voltage Cables."

3.5 FIELD QUALITY CONTROL

A. Prepare for acceptance tests as follows:

1. Test insulation resistance for each switchgear bus, component, connecting supply, feeder, and control circuit.

2. Test continuity of each circuit.

B. Manufacturer's Field Service: Engage a factory-authorized service representative to perform the following:

1. Inspect switchgear, wiring, components, connections, and equipment installation. Test and adjust components and equipment.

2. Report results in writing.

C. Perform the following field tests and inspections and prepare test reports:

1. Perform each electrical test and visual and mechanical inspection stated in NETA ATS. Certify compliance with test parameters. Perform NETA tests and inspections for each of the following NETA categories:

   a. Switchgear.
   b. Metering and instrumentation.
   c. Surge arresters.

D. Remove and replace malfunctioning units and retest as specified above.

E. Infrared Scanning: After Substantial Completion, but not more than 60 days after Final Acceptance, perform infrared scan of each switchgear. Remove front and rear panels so joints and connections are accessible to portable scanner.

1. Follow-up Infrared Scanning: Perform an additional follow-up infrared scan of each switchgear 11 months after date of Substantial Completion.

2. Instrument: Use an infrared-scanning device designed to measure temperature or to detect significant deviations from normal values. Provide calibration record for device.

3. Record of Infrared Scanning: Prepare a certified report that identifies switchgear checked and that describes infrared-scanning results. Include notation of deficiencies detected, remedial action taken, and observations after remedial action.

3.6 CLEANING

A. On completion of installation, inspect interior and exterior of switchgear. Vacuum dirt and debris; do not use compressed air to assist in cleaning. Repair damaged finishes.

3.7 PROTECTION

A. Temporary Heating: Apply temporary heat to switchgear, according to manufacturer's written instructions, throughout periods when switchgear environment is not controlled for temperature and humidity within manufacturer's stipulated service conditions.

3.8 DEMONSTRATION

A. Engage a factory-authorized service representative to train Owner's maintenance personnel to adjust, operate, and maintain switchgear.

END OF SECTION 26 13 00

SECTION 26 22 00 - LOW-VOLTAGE TRANSFORMERS

PART 1 - GENERAL

1.1 RELATED DOCUMENTS

A. Drawings and general provisions of the Trade Contract, including General and Supplementary Conditions and Division 01 Specification Sections, apply to this Section.

1.2 SUMMARY

A. This Section includes the following types of dry-type transformers rated 600 V and less, with capacities up to 300 kVA:

1. Distribution transformers.

1.3 ACTION SUBMITTALS

A. Product Data: Include rated nameplate data, capacities, weights, dimensions, minimum clearances, installed devices and features, and performance for each type and size of transformer indicated.

B. Shop Drawings: Detail equipment assemblies and indicate dimensions, weights, loads, required clearances, method of field assembly, components, and location and size of each field connection.

1. Wiring Diagrams: Power, signal, and control wiring.

1.4 INFORMATIONAL SUBMITTALS

A. Dimensioned Outline Drawings of Equipment Unit: Identify center of gravity and locate and describe mounting and anchorage provisions.

B. Detailed description of equipment anchorage devices on which the certification is based and their installation requirements.

C. Source quality-control test reports.

D. Field quality-control test reports.

1.5 CLOSEOUT SUBMITTALS

A. Operation and Maintenance Data: For transformers to include in emergency, operation, and maintenance manuals.

1.6 QUALITY ASSURANCE

A. Source Limitations: Obtain each transformer type through one source from a single manufacturer.

B. Electrical Components, Devices, and Accessories: Listed and labeled as defined in NFPA 70, Article 100, by a testing agency acceptable to authorities having jurisdiction, and marked for intended use.

C. Comply with IEEE C57.12.91, "Test Code for Dry-Type Distribution and Power Transformers."

1.7 DELIVERY, STORAGE, AND HANDLING

A. Temporary Heating: Apply temporary heat according to manufacturer's written instructions within the enclosure of each ventilated-type unit, throughout periods during which equipment is not energized and when transformer is not in a space that is continuously under normal control of temperature and humidity.

1.8 COORDINATION

A. Coordinate size and location of concrete bases with actual transformer provided. Cast anchor-bolt inserts into bases. Concrete, reinforcement, and formwork requirements are specified in Division 03.

B. Coordinate installation of wall-mounting and structure-hanging supports with actual transformer provided.

PART 2 - PRODUCTS

2.1 MANUFACTURERS

A. Basis-of-Design Product: Subject to compliance with requirements, provide Square D; Schneider Electric or comparable product by one of the following:

1. Eaton Electrical Inc.; Cutler-Hammer Products.

2. General Electric Company.

3. Siemens Energy & Automation, Inc.

2.2 GENERAL TRANSFORMER REQUIREMENTS

A. Description: Factory-assembled and -tested, air-cooled units for 60-Hz service.

B. Cores: Grain-oriented, non-aging silicon steel.

C. Coils: Continuous windings without splices except for taps.

1. Internal Coil Connections: Brazed or pressure type.

2. Coil Material: Copper.

2.3 DISTRIBUTION TRANSFORMERS

A. Comply with NEMA ST 20, and list and label as complying with UL 1561.

B. Provide transformers that are constructed to withstand seismic forces specified in Division 26 Section "Vibration and Seismic Controls for Electrical Systems."

C. Cores: One leg per phase.

D. Enclosure: Ventilated, NEMA 250, Type 2.

1. Core and coil shall be encapsulated within resin compound, sealing out moisture and air.

E. Transformer Enclosure Finish: Comply with NEMA 250.

1. Finish Color: Gray.

F. Taps for Transformers 15 kVA and Larger: Two 2.5 percent taps above and four 2.5 percent taps below normal full capacity.

G. Insulation Class: 220 deg C, UL-component-recognized insulation system with a maximum of 150 deg C rise above 40 deg C ambient temperature.

H. Energy Efficiency for Transformers Rated 15 kVA and Larger:

1. Complying with NEMA TP 1, Class 1 efficiency levels.
2. Tested according to NEMA TP 2.

I. Low-Sound-Level Requirements: Minimum of 3 dBA less than NEMA ST 20 standard sound levels when factory tested according to IEEE C57.12.91.

2.4 IDENTIFICATION DEVICES

A. Nameplates: Engraved, laminated-plastic nameplate for each distribution transformer. Nameplates and label products are specified in Division 26 Section "Identification for Electrical Systems."

2.5 SOURCE QUALITY CONTROL

A. Test and inspect transformers according to IEEE C57.12.91.

B. Provide certified test reports prior to shipping.

C. Factory Sound-Level Tests: Conduct sound-level tests on equipment for this Project.

PART 3 - EXECUTION

3.1 EXAMINATION

A. Examine conditions for compliance with enclosure- and ambient-temperature requirements for each transformer.

B. Verify that field measurements are as needed to maintain working clearances required by NFPA 70 and manufacturer's written instructions.

C. Examine walls, floors, roofs, and concrete bases for suitable mounting conditions where transformers will be installed.

D. Verify that ground connections are in place and requirements in Division 26 Section "Grounding and Bonding for Electrical Systems" have been met. Maximum ground resistance shall be 5 ohms at location of transformer.

E. Proceed with installation only after unsatisfactory conditions have been corrected.

3.2 INSTALLATION

A. Construct concrete bases and anchor floor-mounting transformers according to manufacturer's written instructions and requirements in Division 26 Section "Hangers and Supports for Electrical Systems."

3.3 CONNECTIONS

A. Ground equipment according to Division 26 Section "Grounding and Bonding for Electrical Systems."

B. Connect wiring according to Division 26 Section "Low-Voltage Electrical Power Conductors and Cables."

3.4 FIELD QUALITY CONTROL

A. Manufacturer's Field Service: Engage a factory-authorized service representative to inspect, test, and adjust components, assemblies, and equipment installations, including connections. Report results in writing.

B. Perform tests and inspections and prepare test reports.

1. Manufacturer's Field Service: Engage a factory-authorized service representative to inspect components, assemblies, and equipment installations, including connections, and to assist in testing.

C. Tests and Inspections:

1. Perform each visual and mechanical inspection and electrical test stated in NETA Acceptance Testing Specification. Certify compliance with test parameters.

D. Remove and replace units that do not pass tests or inspections and retest as specified above.

E. Test Labeling: On completion of satisfactory testing of each unit, attach a dated and signed "Satisfactory Test" label to tested component.

3.5 ADJUSTING

A. Record transformer secondary voltage at each unit for at least 48 hours of typical occupancy period. Adjust transformer taps to provide optimum voltage conditions at secondary terminals. Optimum is defined as not exceeding nameplate voltage plus 10 percent and not being lower than nameplate voltage minus 3 percent at maximum load conditions. Submit recording and tap settings as test results.

B. Connect buck-boost transformers to provide nameplate voltage of equipment being served, plus or minus 5 percent, at secondary terminals.

C. Output Settings Report: Prepare a written report recording output voltages and tap settings.

3.6 CLEANING

A. Vacuum dirt and debris; do not use compressed air to assist in cleaning.

END OF SECTION 26 22 00

SECTION 26 24 16 - PANELBOARDS

PART 1 - GENERAL

1.1 RELATED DOCUMENTS

A. Drawings and general provisions of the Trade Contract, including General and Supplementary Conditions and Division 01 Specification Sections, apply to this Section.

1.2 SUMMARY

A. Section Includes:

1. Distribution panelboards.

2. Lighting and appliance branch-circuit panelboards.

1.3 DEFINITIONS

A. SPD: Surge protection device.

B. SVR: Suppressed voltage rating.

1.4 ACTION SUBMITTALS

A. Product Data: For each type of panelboard, switching and overcurrent protective device, transient voltage suppression device, accessory, and component indicated. Include dimensions and manufacturers' technical data on features, performance, electrical characteristics, ratings, and finishes.

B. Shop Drawings: For each panelboard and related equipment.

1. Include dimensioned plans, elevations, sections, and details. Show tabulations of installed devices, equipment features, and ratings.

2. Detail enclosure types and details for types other than NEMA 250, Type 1.

3. Detail bus configuration, current, and voltage ratings.

4. Short-circuit current rating of panelboards and overcurrent protective devices.

5. Detail features, characteristics, ratings, and factory settings of individual overcurrent protective devices and auxiliary components.

1.5 INFORMATIONAL SUBMITTALS

A. Field Quality-Control Reports:

1. Test procedures used.

2. Test results that comply with requirements.

3. Results of failed tests and corrective action taken to achieve test results that comply with requirements.

1.6 CLOSEOUT SUBMITTALS

A. Operation and Maintenance Data: For panelboards and components to include in emergency, operation, and maintenance manuals. In addition to items specified in Division 01 Section "Operation and Maintenance Data," include the following:

1. Manufacturer's written instructions for testing and adjusting overcurrent protective devices.

2. Time-current curves, including selectable ranges for each type of overcurrent protective device that allows adjustments.

1.7 QUALITY ASSURANCE

A. Source Limitations: Obtain panelboards, overcurrent protective devices, components, and accessories from single source from single manufacturer.

B. Product Selection for Restricted Space: Drawings indicate maximum dimensions for panelboards including clearances between panelboards and adjacent surfaces and other items. Comply with indicated maximum dimensions.

C. Electrical Components, Devices, and Accessories: Listed and labeled as defined in NFPA 70, by a qualified testing agency, and marked for intended location and application.

D. Comply with NEMA PB 1.

E. Comply with NFPA 70.

1.8 DELIVERY, STORAGE, AND HANDLING

A. Remove loose packing and flammable materials from inside panelboards; install temporary electric heating (250 W per panelboard) to prevent condensation.

B. Handle and prepare panelboards for installation according to NEMA PB 1.

1.9 PROJECT CONDITIONS

A. Environmental Limitations:

1. Do not deliver or install panelboards until spaces are enclosed and weathertight, wet work in spaces is complete and dry, work above panelboards is complete, and temporary HVAC system is operating and maintaining ambient temperature and humidity conditions at occupancy levels during the remainder of the construction period.

2. Rate equipment for continuous operation under the following conditions unless otherwise indicated:

a. Ambient Temperature: Not exceeding minus 22 deg F (minus 30 deg C) to plus 104 deg F (plus 40 deg C).

B. Service Conditions: NEMA PB 1, usual service conditions, as follows:

1. Ambient temperatures within limits specified.

1.10 COORDINATION

A. Coordinate layout and installation of panelboards and components with other construction that penetrates walls or is supported by them, including electrical and other types of equipment, raceways, piping, encumbrances to workspace clearance requirements, and adjacent surfaces. Maintain required workspace clearances and required clearances for equipment access doors and panels.

B. Coordinate sizes and locations of concrete bases with actual equipment provided. Cast anchor-bolt inserts into bases. Concrete, reinforcement, and formwork requirements are specified in Division 03.

1.11 WARRANTY

A. Special Warranty: Manufacturer's standard form in which manufacturer agrees to repair or replace surge protection devices that fail in materials or workmanship within specified warranty period.

1. Warranty Period: Five years from date of Substantial Completion.

PART 2 - PRODUCTS

2.1 GENERAL REQUIREMENTS FOR PANELBOARDS

A. Enclosures: Flush- and surface-mounted cabinets.

1. Rated for environmental conditions at installed location.

a. Indoor Dry and Clean Locations: NEMA 250, Type 1.

b. Outdoor Locations: NEMA 250, Type 3R.

2. Front: Secured to box with concealed trim clamps. For surface-mounted fronts, match box dimensions; for flush-mounted fronts, overlap box.

3. Hinged Front Cover: Entire front trim hinged to box and with standard door within hinged trim cover.

4. Skirt for Surface-Mounted Panelboards: Same gauge and finish as panelboard front with flanges for attachment to panelboard, wall, and ceiling or floor.

5. Gutter Extension and Barrier: Same gauge and finish as panelboard enclosure; integral with enclosure body. Arrange to isolate individual panel sections.

6. Finishes:

a. Panels and Trim: Steel, factory finished immediately after cleaning and pretreating with manufacturer's standard two-coat, baked-on finish consisting of prime coat and thermosetting topcoat.
b. Back Boxes: Galvanized steel.

7. Directory Card: Inside panelboard door, mounted in metal frame with transparent protective cover.

B. Incoming Mains Location: Top and bottom.

C. Phase, Neutral, and Ground Buses:

1. Material: Copper.

2. Equipment Ground Bus: Adequate for feeder and branch-circuit equipment grounding conductors; bonded to box.

D. Conductor Connectors: Suitable for use with conductor material and sizes.

1. Material: Hard-drawn copper, 98 percent conductivity.

2. Main and Neutral Lugs: Compression type.

3. Ground Lugs and Bus-Configured Terminators: Compression type.

4. Feed-Through Lugs: Compression type, suitable for use with conductor material. Locate at opposite end of bus from incoming lugs or main device.

5. Subfeed (Double) Lugs: Compression type suitable for use with conductor material. Locate at same end of bus as incoming lugs or main device.

E. Service Equipment Label: NRTL labeled for use as service equipment for panelboards with one or more main service disconnecting and overcurrent protective devices.

F. Future Devices: Mounting brackets, bus connections, filler plates, and necessary appurtenances required for future installation of devices.

G. Panelboard Short-Circuit Current Rating: Fully rated to interrupt symmetrical short-circuit current available at terminals.

2.2 DISTRIBUTION PANELBOARDS

A. Basis-of-Design Product: Subject to compliance with requirements, provide Square D; a brand of Schneider Electric, or comparable product by one of the following:

1. Eaton Electrical Inc.; Cutler-Hammer Business Unit.

2. General Electric Company; GE Consumer & Industrial - Electrical Distribution.

3. Siemens Energy & Automation, Inc.

B. Panelboards: NEMA PB 1, power and feeder distribution type.

C. Doors: Secured with vault-type latch with tumbler lock; keyed alike.

1. For doors more than 36 inches (914 mm) high, provide two latches, keyed alike.

D. Mains: Circuit breaker.

E. Branch Overcurrent Protective Devices for Circuit-Breaker Frame Sizes 125 A and Smaller: Bolt-on circuit breakers.

F. Branch Overcurrent Protective Devices for Circuit-Breaker Frame Sizes Larger Than 125 A: Bolt-on circuit breakers; plug-in circuit breakers where individual positive-locking device requires mechanical release for removal.

2.3 LIGHTING AND APPLIANCE BRANCH-CIRCUIT PANELBOARDS

A. Basis-of-Design Product: Subject to compliance with requirements, provide Square D; a brand of Schneider Electric, or comparable product by one of the following:

1. Eaton Electrical Inc.; Cutler-Hammer Business Unit.

2. General Electric Company; GE Consumer & Industrial - Electrical Distribution.

3. Siemens Energy & Automation, Inc.

B. Panelboards: NEMA PB 1, lighting and appliance branch-circuit type.

C. Mains: Circuit breaker or lugs only.

D. Branch Overcurrent Protective Devices: Bolt-on circuit breakers, replaceable without disturbing adjacent units.

E. Doors: Concealed hinges; secured with flush latch with tumbler lock; keyed alike.

2.4 DISCONNECTING AND OVERCURRENT PROTECTIVE DEVICES

A. Molded-Case Circuit Breaker (MCCB): Comply with UL 489, with interrupting capacity to meet available fault currents.

1. Thermal-Magnetic Circuit Breakers: Inverse time-current element for low-level overloads, and instantaneous magnetic trip element for short circuits. Adjustable magnetic trip setting for circuit-breaker frame sizes 250 A and larger.

2. Electronic trip circuit breakers with rms sensing; field-replaceable rating plug or field-replicable electronic trip; and the following field-adjustable settings:

   a. Instantaneous trip.
   b. Long- and short-time pickup levels.
   c. Long- and short-time time adjustments.
   d. Ground-fault pickup level, time delay, and I^2t response.

3. Current-Limiting Circuit Breakers: Frame sizes 400 A and smaller; let-through ratings less than NEMA FU 1, RK-5.

4. GFCI Circuit Breakers: Single- and two-pole configurations with Class A ground-fault protection (6-mA trip).

5. Ground-Fault Equipment Protection (GFEP) Circuit Breakers: Class B ground-fault protection (30-mA trip).

6. Molded-Case Circuit-Breaker (MCCB) Features and Accessories:

   a. Standard frame sizes, trip ratings, and number of poles.
   b. Lugs: Compression style, suitable for number, size, trip ratings, and conductor materials.
   c. Application Listing: Appropriate for application; Type SWD for switching fluorescent lighting loads; Type HID for feeding fluorescent and high-intensity discharge (HID) lighting circuits.
   d. Ground-Fault Protection: Integrally mounted relay and trip unit with adjustable pickup and time-delay settings, push-to-test feature, and ground-fault indicator.
   e. Shunt Trip: 120V trip coil energized from separate circuit, set to trip at 55 percent of rated voltage.
   f. Undervoltage Trip: Set to operate at 35 to 75 percent of rated voltage without intentional time delay.
   g. Auxiliary Contacts: One SPDT switch with "a" and "b" contacts; "a" contacts mimic circuit-breaker contacts and "b" contacts operate in reverse of circuit-breaker contacts.
   h. Multipole units enclosed in a single housing or factory assembled to operate as a single unit.
   i. Handle Padlocking Device: Fixed attachment, for locking circuit-breaker handle in on or off position.
   j. Handle Clamp: Loose attachment, for holding circuit-breaker handle in on position.

2.5 PANELBOARD SUPPRESSORS (SPD)

A. Basis-of-Design Product: Subject to compliance with requirements, provide Square D; a brand of Schneider Electric, or comparable product by one of the following:

1. Eaton Electrical Inc.; Cutler-Hammer Business Unit.

2. General Electric Company; GE Consumer & Industrial - Electrical Distribution.

3. Siemens Energy & Automation, Inc.

B. Surge Protection Device: IEEE C62.41-compliant, integrally mounted, bolt-on, solid-state, parallel-connected, modular (with field-replaceable modules) type, with sine-wave tracking suppression and filtering modules, UL 1449, second edition, short-circuit current rating matching or exceeding the panelboard short-circuit rating, and with the following features and accessories:

1. Accessories:

a. Fuses rated at 200-kA interrupting capacity.
b. Fabrication using bolted compression lugs for internal wiring.
c. Integral disconnect switch.
d. Redundant suppression circuits.
e. Redundant replaceable modules.
f. Arrangement with wire connections to phase buses, neutral bus, and ground bus.
g. LED indicator lights for power and protection status.
h. Audible alarm, with silencing switch, to indicate when protection has failed.
i. Form-C contacts rated at 5 A and 250-V ac, one normally open and one normally closed, for remote monitoring of system operation. Contacts shall reverse position on failure of any surge diversion module or on opening of any current-limiting device. Coordinate with building power monitoring and control system.
j. Six-digit, transient-event counter set to totalize transient surges.

2. Peak Single-Impulse Surge Current Rating: 120 kA per mode/240 kA per phase.

3. Minimum single-impulse current ratings, using 8-by-20-mic.sec. waveform described in IEEE C62.41.2.

a. Line to Neutral: 70,000 A.
b. Line to Ground: 70,000 A.
c. Neutral to Ground: 50,000 A.

4. Withstand Capabilities: 12,000 IEEE C62.41, Category C3 (10 kA), 8-by-20-mic.sec. surges with less than 5 percent change in clamping voltage.

5. Protection modes and UL 1449 SVR for grounded wye circuits with 480Y/277 and 208Y/120-V, three-phase, four-wire circuits shall be as follows:

a. Line to Neutral: 800 V for 480Y/277, 400 V for 208Y/120.
b. Line to Ground: 800 V for 480Y/277, 400 V for 208Y/120.
c. Neutral to Ground: 800 V for 480Y/277, 400 V for 208Y/120V.

2.6 ACCESSORY COMPONENTS AND FEATURES

A. Accessory Set: Include tools and miscellaneous items required for overcurrent protective device test, inspection, maintenance, and operation.

B. Portable Test Set: For testing functions of solid-state trip devices without removing from panelboard. Include relay and meter test plugs suitable for testing panelboard meters and switchboard class relays.

2.7 ELECTRICAL LOAD CENTER

A. The Electric Load Center shall be a mini-unit substation consisting of a dry type transformer with an attached electrical panel. The transformer shall be either a three phase configuration (480VAC delta primary; 120/208VAC three phase wye secondary) or a single phase configuration (480VAC primary; 120/240VAC secondary) as shown on the drawings. The KVA rating for the transformer shall be as shown on the drawings. The electrical panel shall be a circuit breaker type and shall include both transformer primary and transformer secondary (panelboard main) circuit breakers. It shall be provided as a single factory assembled unit in a NEMA 3R enclosure suitable for exterior use and installation on a concrete pad or an elevated platform. The unit shall be UL listed for unit substations.

B. The transformer shall comply with NEMA ST 20, shall have a NEMA 3R ventilated enclosure and shall be an air cooled construction type with resin compound encapsulated core and coil to seal out moisture and air. A single phase transformer shall be rated 180 deg. C with a 115 deg. rise and have the following taps: One 5 percent tap above and two 5 percent tap below rated primary volts. A three phase transformer shall be rated 220 deg. C with a 150 deg. rise and have the following taps: One 5 percent tap above and two 5 percent tap below rated primary volts.

C. The panelboard shall have a NEMA 3R ventilated enclosure with a padlockable hinged front cover. The interior panel cover shall be a hinged trim cover; secured with flush latch. The panel shall have bottom fed mains and tin plated copper phase, neutral and ground bars. Conductor connectors shall be mechanical type labeled for use with copper conductors. Provide the panel complete with all mounting brackets, bus connections, filler plates, and necessary appurtenances required for present and future installation of devices. The panelboard shall be fully rated at the short circuit rating indicated and provided with circuit breakers as scheduled on the drawings. The circuit breakers shall be molded case in compliance with UL489. Provide GFCI circuit breakers for any 120 VAC receptacle circuits.

PART 3 - EXECUTION

3.1 EXAMINATION

A. Receive, inspect, handle, and store panelboards according to NEMA PB 1.1.

B. Examine panelboards before installation. Reject panelboards that are damaged or rusted or have been subjected to water saturation.

C. Examine elements and surfaces to receive panelboards for compliance with installation tolerances and other conditions affecting performance of the Work.

D. Proceed with installation only after unsatisfactory conditions have been corrected.

3.2 INSTALLATION

A. Install panelboards and accessories according to NEMA PB 1.1.

B. Equipment Mounting: Install panelboards on concrete bases, 4-inch (100-mm) nominal thickness. Comply with requirements for concrete base specified in Division 03 Section "Cast-in-Place Concrete."

1. Install dowel rods to connect concrete base to concrete floor. Unless otherwise indicated, install dowel rods on 18-inch (450-mm) centers around full perimeter of base.

2. For panelboards, install epoxy-coated anchor bolts that extend through concrete base and anchor into structural concrete floor.

3. Place and secure anchorage devices. Use setting drawings, templates, diagrams, instructions, and directions furnished with items to be embedded.

4. Install anchor bolts to elevations required for proper attachment to panelboards.

5. Attach panelboard to the vertical finished or structural surface behind the panelboard.

C. Temporary Lifting Provisions: Remove temporary lifting eyes, channels, and brackets and temporary blocking of moving parts from panelboards.

D. Comply with mounting and anchoring requirements specified in Division 26 Section "Vibration and Seismic Controls for Electrical Systems."

E. Mount top of trim 90 inches (2286 mm) above finished floor unless otherwise indicated.

F. Mount panelboard cabinet plumb and rigid without distortion of box. Mount recessed panelboards with fronts uniformly flush with wall finish and mating with back box.

G. Install overcurrent protective devices and controllers not already factory installed.

H. Install filler plates in unused spaces.

I. Arrange conductors in gutters into groups and bundle and wrap with wire ties.

J. Comply with NECA 1.

3.3 IDENTIFICATION

A. Identify field-installed conductors, interconnecting wiring, and components; provide warning signs complying with Division 26 Section "Identification for Electrical Systems."

B. Create a directory to indicate installed circuit loads; incorporate Owner's final room designations. Obtain approval before installing. Use a computer or typewriter to create directory; handwritten directories are not acceptable.

C. Panelboard Nameplates: Label each panelboard with a nameplate complying with requirements for identification specified in Division 26 Section "Identification for Electrical Systems."

D. Device Nameplates: Label each branch circuit device in distribution panelboards with a nameplate complying with requirements for identification specified in Division 26 Section "Identification for Electrical Systems."

3.4 FIELD QUALITY CONTROL

A. Perform tests and inspections.

1. Manufacturer's Field Service: Engage a factory-authorized service representative to inspect components, assemblies, and equipment installations, including connections, and to assist in testing.

B. Acceptance Testing Preparation:

1. Test insulation resistance for each panelboard bus, component, connecting supply, feeder, and control circuit.

2. Test continuity of each circuit.

C. Tests and Inspections:

1. Trade malfunctioning units on-site, where possible, and retest to demonstrate compliance; otherwise, replace with new units and retest.

D. Panelboards will be considered defective if they do not pass tests and inspections.

E. Prepare test and inspection reports, including a certified report that identifies panelboards included. Include notation of deficiencies detected, remedial action taken and observations after remedial action.

3.5 ADJUSTING

A. Adjust moving parts and operable component to function smoothly, and lubricate as recommended by manufacturer.

B. Set field-adjustable circuit-breaker trip ranges as specified in Division 26 Section "Overcurrent Protective Device Coordination Study."

END OF SECTION 26 24 16

SECTION 26 27 13 - ELECTRICITY METERING

PART 1 - GENERAL

1.1 RELATED DOCUMENTS

A. Drawings and general provisions of the Trade Contract, including General and Supplementary Conditions and Division 01 Specification Sections, apply to this Section.

1.2 SUMMARY

A. Section includes equipment for electricity metering by Owner.

1.3 DEFINITIONS

A. KY Pulse: Term used by the metering industry to describe a method of measuring consumption of electricity that is based on a relay opening and closing in response to the rotation of the disk in the meter.

B. PC: Personal computer.

1.4 ACTION SUBMITTALS

A. Product Data: For each type of product indicated.

B. Shop Drawings: For electricity-metering equipment.

1. Dimensioned plans and sections or elevation layouts.

2. Wiring Diagrams: For power, signal, and control wiring. Identify terminals and wiring designations and color-codes to facilitate installation, operation, and maintenance. Indicate recommended types, wire sizes, and circuiting arrangements for field-installed wiring, and show circuit protection features.

1.5 INFORMATIONAL SUBMITTALS

A. Field quality-control reports.

1.6 CLOSEOUT SUBMITTALS

A. Operation and Maintenance Data. In addition to items specified in Division 01 Section "Operation and Maintenance Data," include the following:

1. Application and operating software documentation.

2. Software licenses.

3. Software service agreement.

4. Hard copies of manufacturer's operating specifications, design user's guides for software and hardware, and PDF files on CD-ROM of the hard-copy Submittal.

1.7 QUALITY ASSURANCE

A. Electrical Components, Devices, and Accessories: Listed and labeled as defined in NFPA 70, by a qualified testing agency, and marked for intended location and application.

1.8 DELIVERY, STORAGE, AND HANDLING

A. Receive, store, and handle modular meter center according to NECA 400.

1.9 COORDINATION

A. Electrical Service Connections: Coordinate with utility companies and components they furnish as follows:

1. Comply with requirements of utilities providing electrical power services.

2. Coordinate installation and connection of utilities and services, including provision for electricity-metering components.

1.10 SOFTWARE SERVICE AGREEMENT

A. Technical Support: Beginning with Substantial Completion, provide software support for two years.

B. Upgrade Service: Update software to latest version at Project completion. Install and program software upgrades that become available within two years from date of Substantial Completion. Upgrading software shall include operating system. Upgrade shall include new or revised licenses for use of software.

1. Provide 30 days' notice to Owner to allow scheduling and access to system and to allow Owner to upgrade his computer equipment if necessary.

PART 2 - PRODUCTS

2.1 EQUIPMENT FOR ELECTRICITY METERING BY OWNER

A. Basis-of-Design Product: Subject to compliance with requirements, provide E-Mon or comparable product by one of the following:
1. National Meter Industries.
2. Osaki Meter Sales, Inc.
3. Square D; a brand of Schneider Electric.
4. Siemens.

5. General Electric Company.
6. Eaton.

B. General Requirements for Owner's Meters:

1. Comply with UL 1244.

2. Meters used for billing shall have an accuracy of 0.2 percent of reading, complying with requirements in ANSI C12.20.

3. Enclosure: NEMA 250, Type 1 minimum, with hasp for padlocking or sealing.

4. Identification: Comply with requirements in Division 26 Section "Identification for Electrical Systems."

5. Memory Backup: Self-contained to maintain memory throughout power outages of 72 hours, minimum.

6. Sensors: Current-sensing type, with current or voltage output, selected for optimum range and accuracy for meters indicated for this application.

a. Type: Split and solid core.

7. Current-Transformer Cabinet: Listed or recommended by metering equipment manufacturer for use with sensors indicated.

8. Building Automation System (BAS) Interface: One digital KY pulse to a user-definable increment of energy measurement. Match signal to BAS input and arrange to convey the instantaneous, integrated, demand level measured by meter to provide data for processing and possible programmed demand control action by destination system.

C. Kilowatt-hour/Demand Meter: Electronic three-phase meters, measuring electricity use and demand. Demand shall be integrated over a 15-minute interval.

1. Voltage and Phase Configuration: Meter shall be designed for use on circuits with voltage rating and phase configuration indicated for its application.

2. Display: LCD with characters not less than 0.25 inch (6 mm) high, indicating accumulative kilowatt-hours, current time and date, current demand, and historic peak demand, and time and date of historic peak demand. Retain accumulated kilowatt-hour and historic peak demand in a nonvolatile memory, until reset.

D. Data Transmission Cable: Transmit KY pulse data over Class 1 control-circuit conductors in raceway. Comply with Division 26 Section "Low-Voltage Electrical Power Conductors and Cables."

E. Software: PC based, a product of meter manufacturer, suitable for calculation of utility cost allocation and billing.

1. Utility Cost Allocation: Automatically import energy-usage records to allocate energy costs for the following:

a. At least five processes.

2. Activity Billing Software: Automatically import energy-usage records to automatically compute and prepare activity demand and energy-use statements based on metering of

energy use and peak demand. Prepare summary reports in user-defined formats and time intervals.

PART 3 - EXECUTION

3.1 INSTALLATION

A. Comply with equipment installation requirements in NECA 1.

B. Install meters furnished by utility company. Install raceways and equipment according to utility company's written requirements. Provide empty conduits for metering leads and extend grounding connections as required by utility company.

C. Install modular meter center according to NECA 400 switchboard installation requirements.

3.2 IDENTIFICATION

A. Comply with requirements for identification specified in Division 26 Section "Identification for Electrical Systems."

3.3 FIELD QUALITY CONTROL

A. Perform tests and inspections.

1. Manufacturer's Field Service: Engage a factory-authorized service representative to inspect components, assemblies, and equipment installations, including connections, and to assist in testing.

B. Tests and Inspections:

1. Connect a load of known kilowatt rating, 1.5 kW minimum, to a circuit supplied by metered feeder.
2. Turn off circuits supplied by metered feeder and secure them in off condition.
3. Run test load continuously for eight hours minimum, or longer, to obtain a measurable meter indication. Use test-load placement and setting that ensures continuous, safe operation.
4. Check and record meter reading at end of test period and compare with actual electricity used, based on test-load rating, duration of test, and sample measurements of supply voltage at test-load connection. Record test results.

C. Electricity metering will be considered defective if it does not pass tests and inspections.

D. Prepare test and inspection reports.

END OF SECTION 26 27 13

SECTION 26 27 26 - WIRING DEVICES

PART 1 - GENERAL

1.1 RELATED DOCUMENTS

A. Drawings and general provisions of the Trade Contract, including General and Supplementary Conditions and Division 01 Specification Sections, apply to this Section.

1.2 SUMMARY

A. Section Includes:

1. Receptacles, receptacles with integral GFCI, and associated device plates.

2. Twist-locking receptacles.

3. Weather-resistant receptacles.

4. Snap switches and wall-box dimmers.

5. Pendant cord-connector devices.

6. Floor service outlets, poke-through assemblies and multioutlet assemblies.

1.3 DEFINITIONS

A. EMI: Electromagnetic interference.

B. GFCI: Ground-fault circuit interrupter.

C. Pigtail: Short lead used to connect a device to a branch-circuit conductor.

D. RFI: Radio-frequency interference.

E. UTP: Unshielded twisted pair.

1.4 ADMINISTRATIVE REQUIREMENTS

A. Coordination:

1. Receptacles for Owner-Furnished Equipment: Match plug configurations.

1.5 ACTION SUBMITTALS

A. Product Data: For each type of product.

B. Shop Drawings: List of legends and description of materials.

1.6 INFORMATIONAL SUBMITTALS

A. Field quality-control reports.

1.7 CLOSEOUT SUBMITTALS

A. Operation and Maintenance Data: For wiring devices to include in all manufacturers' packing-label warnings and instruction manuals that include labeling conditions.

PART 2 - PRODUCTS

2.1 MANUFACTURERS

A. Manufacturers' Names: Shortened versions (shown in parentheses) of the following manufacturers' names are used in other Part 2 articles:

1. Cooper Wiring Devices; Division of Cooper Industries, Inc. (Cooper).

2. Hubbell Incorporated; Wiring Device-Kellems (Hubbell).

3. Leviton Mfg. Company Inc. (Leviton).

4. Pass & Seymour/Legrand (Pass & Seymour).

B. Source Limitations: Obtain each type of wiring device and associated wall plate from single source from single manufacturer.

2.2 GENERAL WIRING-DEVICE REQUIREMENTS

A. Wiring Devices, Components, and Accessories: Listed and labeled as defined in NFPA 70, by a qualified testing agency, and marked for intended location and application.

B. Comply with NFPA 70.

C. Devices that are manufactured for use with modular plug-in connectors may be substituted under the following conditions:

1. Connectors shall comply with UL 2459 and shall be made with stranding building wire.

2. Devices shall comply with the requirements in this Section.

2.3 STRAIGHT-BLADE RECEPTACLES

A. Convenience Receptacles, 125 V, 20 A: Comply with NEMA WD 1, NEMA WD 6 Configuration 5-20R, UL 498, and FS W-C-596.

1. Products: Subject to compliance with requirements, provide one of the following:

a. Cooper; 5351 (single), CR5362 (duplex).
b. Hubbell; HBL5351 (single), HBL5352 (duplex).
c. Leviton; 5891 (single), 5352 (duplex).
d. Pass & Seymour; 5361 (single), 5362 (duplex).

2.4 GFCI RECEPTACLES

A. General Description:

1. Straight blade, non-feed-through type.

2. Comply with NEMA WD 1, NEMA WD 6, UL 498, UL 943 Class A, and FS W-C-596.

3. Include indicator light that shows when the GFCI has malfunctioned and no longer provides proper GFCI protection.

B. Duplex GFCI Convenience Receptacles, 125 V, 20 A:

1. Products: Subject to compliance with requirements, provide one of the following:

a. Cooper; VGF20.
b. Hubbell; GFR5352L.
c. Pass & Seymour; 2095.
d. Leviton; 7590.

2.5 TWIST-LOCKING RECEPTACLES

A. Single Convenience Receptacles, 125 V, 20 A: Comply with NEMA WD 1, NEMA WD 6 Configuration L5-20R, and UL 498.

1. Products: Subject to compliance with requirements, provide one of the following:

a. Cooper; CWL520R.
b. Hubbell; HBL2310.
c. Leviton; 2310.
d. Pass & Seymour; L520-R.

2.6 PENDANT CORD-CONNECTOR DEVICES

A. Description:

1. Matching, locking-type plug and receptacle body connector.

2. NEMA WD 6 Configurations L5-20P and L5-20R, heavy-duty grade, and FS W-C-596.

3. Body: Nylon, with screw-open, cable-gripping jaws and provision for attaching external cable grip.

4. External Cable Grip: Woven wire-mesh type made of high-strength, galvanized-steel wire strand, matched to cable diameter, and with attachment provision designed for corresponding connector.

2.7 CORD AND PLUG SETS

A. Description:

1. Match voltage and current ratings and number of conductors to requirements of equipment being connected.

2. Cord: Rubber-insulated, stranded-copper conductors, with Type SOW-A jacket; with green-insulated grounding conductor and ampacity of at least 130 percent of the equipment rating.

3. Plug: Nylon body and integral cable-clamping jaws. Match cord and receptacle type for connection.

2.8 TOGGLE SWITCHES

A. Comply with NEMA WD 1, UL 20, and FS W-S-896.

B. Switches, 120/277 V, 20 A:

1. Products: Subject to compliance with requirements, provide one of the following:

a. Single Pole:

1) Cooper; AH1221.
2) Hubbell; HBL1221.
3) Leviton; 1221-2.
4) Pass & Seymour; CSB20AC1.

b. Three Way:

1) Cooper; AH1223.
2) Hubbell; HBL1223.
3) Leviton; 1223-2.
4) Pass & Seymour; CSB20AC3.

c. Four Way:

1) Cooper; AH1224.
2) Hubbell; HBL1224.
3) Leviton; 1224-2.

4) Pass & Seymour; CSB20AC4.

2.9 WALL-BOX DIMMERS

A. Dimmer Switches: Modular, full-wave, solid-state units with integral, quiet on-off switches, with audible frequency and EMI/RFI suppression filters.

B. Control: Continuously adjustable slider; with single-pole or three-way switching. Comply with UL 1472.

C. Fluorescent Lamp Dimmer Switches: Modular; compatible with dimmer ballasts; trim potentiometer to adjust low-end dimming; dimmer-ballast combination capable of consistent dimming with low end not greater than 20 percent of full brightness.

2.10 WALL PLATES

A. Single and combination types shall match corresponding wiring devices.

1. Plate-Securing Screws: Metal with head color to match plate finish.

2. Material for Finished Spaces: 0.035-inch- (1-mm-) thick, satin-finished, Type 302 stainless steel.

3. Material for Unfinished Spaces: Galvanized steel.

4. Material for Damp Locations: Die cast aluminum with spring-loaded lift cover, and listed and labeled for use in wet and damp locations.

B. Wet-Location, Weatherproof Cover Plates: NEMA 250, complying with Type 3R, weather-resistant, die-cast aluminum with lockable cover, labeled for use in wet locations.

2.11 FLOOR SERVICE FITTINGS

A. Type: Modular, flush-type, dual-service units suitable for wiring method used.

B. Compartments: Barrier separates power from voice and data communication cabling.

C. Service Plate: Round, solid brass with satin finish.

D. Power Receptacle: NEMA WD 6 Configuration 5-20R, gray finish, unless otherwise indicated.

E. Voice and Data Communication Outlet: Two modular, keyed, color-coded, RJ-45 jacks for UTP cable complying with requirements in Division 27 Section "Communications Horizontal Cabling."

2.12 POKE-THROUGH ASSEMBLIES

A. Manufacturers: Subject to compliance with requirements, provide products by one of the following:

1. Hubbell Incorporated; Wiring Device-Kellems.

2. Pass & Seymour/Legrand.

3. Square D/Schneider Electric.

4. Thomas & Betts Corporation.

5. Wiremold/Legrand.

B. Description:

1. Factory-fabricated and -wired assembly of below-floor junction box with multichanneled, through-floor raceway/firestop unit and detachable matching floor service-outlet assembly.

2. Comply with UL 514 scrub water exclusion requirements.

3. Service-Outlet Assembly: Flush type with four simplex receptacles and space for four RJ-45 jacks complying with requirements in Division 27 Section "Communications Horizontal Cabling."

4. Size: Selected to fit nominal 4-inch (100-mm) cored holes in floor and matched to floor thickness.

5. Fire Rating: Unit is listed and labeled for fire rating of floor-ceiling assembly.

6. Closure Plug: Arranged to close unused 4-inch (100-mm) cored openings and reestablish fire rating of floor.

7. Wiring Raceways and Compartments: For a minimum of four No. 12 AWG conductors and a minimum of four, four-pair cables that comply with requirements in Division 27 Section "Communications Horizontal Cabling."

2.13 PREFABRICATED MULTIOUTLET ASSEMBLIES

A. Basis-of-Design Product: Subject to compliance with requirements, provide product indicated on Drawings or comparable product by one of the following:

1. Hubbell Incorporated; Wiring Device-Kellems.

2. Wiremold/Legrand.

B. Description:

1. Two-piece surface metal raceway, with factory-wired multioutlet harness.

2. Components shall be products from single manufacturer designed for use as a complete, matching assembly of raceways and receptacles.

C. Raceway Material: Metal, with manufacturer's standard finish.

D. Multioutlet Harness:

1. Receptacles: 20-A, 125-V, NEMA WD 6 Configuration 5-20R receptacles complying with NEMA WD 1, UL 498, and FS W-C-596.

2. Receptacle Spacing: 12 inches (300 mm).

3. Wiring: No. 12 AWG solid, Type THHN copper.

2.14 FINISHES

A. Device Color:

1. Wiring Devices Connected to Normal Power System: Gray unless otherwise indicated or required by NFPA 70 or device listing.

2. Wiring Devices Connected to Emergency Power System: Red.

PART 3 - EXECUTION

3.1 INSTALLATION

A. Comply with NECA 1, including mounting heights listed in that standard, unless otherwise indicated.

B. Coordination with Other Trades:

1. Protect installed devices and their boxes. Do not place wall finish materials over device boxes and do not cut holes for boxes with routers that are guided by riding against outside of boxes.

2. Keep outlet boxes free of plaster, drywall joint compound, mortar, cement, concrete, dust, paint, and other material that may contaminate the raceway system, conductors, and cables.

3. Install device boxes in brick or block walls so that the cover plate does not cross a joint unless the joint is troweled flush with the face of the wall.

4. Install wiring devices after all wall preparation, including painting, is complete.

C. Conductors:

1. Do not strip insulation from conductors until right before they are spliced or terminated on devices.

2. Strip insulation evenly around the conductor using tools designed for the purpose. Avoid scoring or nicking of solid wire or cutting strands from stranded wire.

3. The length of free conductors at outlets for devices shall meet provisions of NFPA 70, Article 300, without pigtails.

D. Device Installation:

1. Replace devices that have been in temporary use during construction and that were installed before building finishing operations were complete.

2. Keep each wiring device in its package or otherwise protected until it is time to connect conductors.

3. Do not remove surface protection, such as plastic film and smudge covers, until the last possible moment.

4. Connect devices to branch circuits using pigtails that are not less than 6 inches (152 mm) in length.

5. Use a torque screwdriver when a torque is recommended or required by manufacturer.

6. When conductors larger than No. 12 AWG are installed on 15- or 20-A circuits, splice No. 12 AWG pigtails for device connections.

7. Tighten unused terminal screws on the device.

8. When mounting into metal boxes, remove the fiber or plastic washers used to hold device-mounting screws in yokes, allowing metal-to-metal contact.

E. Receptacle Orientation:

1. Install ground pin of vertically mounted receptacles up, and on horizontally mounted receptacles to the right.

F. Device Plates: Do not use oversized or extra-deep plates. Repair wall finishes and remount outlet boxes when standard device plates do not fit flush or do not cover rough wall opening.

G. Dimmers:

1. Install dimmers within terms of their listing.

2. Verify that dimmers used for fan speed control are listed for that application.

3. Install unshared neutral conductors on line and load side of dimmers according to manufacturers' device listing conditions in the written instructions.

H. Arrangement of Devices: Unless otherwise indicated, mount flush, with long dimension vertical and with grounding terminal of receptacles on top. Group adjacent switches under single, multigang wall plates.

I. Adjust locations of floor service outlets and service poles to suit arrangement of partitions and furnishings.

3.2 GFCI RECEPTACLES

A. Install non-feed-through-type GFCI receptacles where protection of downstream receptacles is not required.

3.3 IDENTIFICATION

A. Comply with Division 26 Section "Identification for Electrical Systems."

3.4 FIELD QUALITY CONTROL

A. Perform the following tests and inspections:

1. Test Instruments: Use instruments that comply with UL 1436.

B. Tests for Convenience Receptacles:

1. Line Voltage: Acceptable range is 105 to 132 V.

2. Percent Voltage Drop under 15-A Load: A value of 6 percent or higher is unacceptable.

3. Ground Impedance: Values of up to 2 ohms are acceptable.

4. GFCI Trip: Test for tripping values specified in UL 1436 and UL 943.

5. Using the test plug, verify that the device and its outlet box are securely mounted.

6. Tests shall be diagnostic, indicating damaged conductors, high resistance at the circuit breaker, poor connections, inadequate fault current path, defective devices, or similar problems. Correct circuit conditions, remove malfunctioning units and replace with new ones, and retest as specified above.

C. Wiring device will be considered defective if it does not pass tests and inspections.

D. Prepare test and inspection reports.

END OF SECTION 26 27 26

SECTION 26 28 13 - FUSES

PART 1 - GENERAL

1.1 RELATED DOCUMENTS

A. Drawings and general provisions of the Trade Contract, including General and Supplementary Conditions and Division 01 Specification Sections, apply to this Section.

1.2 SUMMARY

A. Section Includes:

1. Cartridge fuses rated 600-V ac and less for use in enclosed switches and enclosed controllers.

2. Spare-fuse cabinets.

1.3 ACTION SUBMITTALS

A. Product Data: For each type of product indicated. Include construction details, material, dimensions, descriptions of individual components, and finishes for spare-fuse cabinets. Include the following for each fuse type indicated:

1. Ambient Temperature Adjustment Information: If ratings of fuses have been adjusted to accommodate ambient temperatures, provide list of fuses with adjusted ratings.

a. For each fuse having adjusted ratings, include location of fuse, original fuse rating, local ambient temperature, and adjusted fuse rating.
b. Provide manufacturer's technical data on which ambient temperature adjustment calculations are based.

2. Dimensions and manufacturer's technical data on features, performance, electrical characteristics, and ratings.

3. Current-limitation curves for fuses with current-limiting characteristics.

4. Time-current coordination curves (average melt) and current-limitation curves (instantaneous peak let-through current) for each type and rating of fuse.

5. Coordination charts and tables and related data.

1.4 CLOSEOUT SUBMITTALS

A. Operation and Maintenance Data: For fuses to include in emergency, operation, and maintenance manuals. In addition to items specified in Division 01 Section "Operation and Maintenance Data," include the following:

1. Ambient temperature adjustment information.

2. Current-limitation curves for fuses with current-limiting characteristics.

3. Time-current coordination curves (average melt) and current-limitation curves (instantaneous peak let-through current) for each type and rating of fuse.

4. Coordination charts and tables and related data.

1.5 MAINTENANCE MATERIAL SUBMITTALS

A. Furnish extra materials that match products installed and that are packaged with protective covering for storage and identified with labels describing contents.

1. Fuses: Equal to 10 percent of quantity installed for each size and type, but no fewer than three of each size and type.

1.6 QUALITY ASSURANCE

A. Source Limitations: Obtain fuses, for use within a specific product or circuit, from single source from single manufacturer.

B. Electrical Components, Devices, and Accessories: Listed and labeled as defined in NFPA 70, by a qualified testing agency, and marked for intended location and application.

C. Comply with NEMA FU 1 for cartridge fuses.

D. Comply with NFPA 70.

1.7 PROJECT CONDITIONS

A. Where ambient temperature to which fuses are directly exposed is less than 40 deg F (5 deg C) or more than 100 deg F (38 deg C), apply manufacturer's ambient temperature adjustment factors to fuse ratings.

1.8 COORDINATION

A. Coordinate fuse ratings with utilization equipment nameplate limitations of maximum fuse size and with system short-circuit current levels.

PART 2 - PRODUCTS

2.1 MANUFACTURERS

A. Manufacturers: Subject to compliance with requirements, provide products by one of the following:

1. Cooper Bussmann, Inc.

2. Edison Fuse, Inc.

3. Ferraz Shawmut, Inc.

4. Littelfuse, Inc.

2.2 CARTRIDGE FUSES

A. Characteristics: NEMA FU 1, nonrenewable cartridge fuses with voltage ratings consistent with circuit voltages.

2.3 SPARE-FUSE CABINET

A. Characteristics: Wall-mounted steel unit with full-length, recessed piano-hinged door and key-coded cam lock and pull.

1. Size: Adequate for storage of spare fuses specified with 15 percent spare capacity minimum.

2. Finish: Gray, baked enamel.

3. Identification: "SPARE FUSES" in 1-1/2-inch- (38-mm-) high letters on exterior of door.

4. Fuse Pullers: For each size of fuse, where applicable and available, from fuse manufacturer.

PART 3 - EXECUTION

3.1 EXAMINATION

A. Examine fuses before installation. Reject fuses that are moisture damaged or physically damaged.

B. Examine holders to receive fuses for compliance with installation tolerances and other conditions affecting performance, such as rejection features.

C. Examine utilization equipment nameplates and installation instructions. Install fuses of sizes and with characteristics appropriate for each piece of equipment.

D. Evaluate ambient temperatures to determine if fuse rating adjustment factors must be applied to fuse ratings.

E. Proceed with installation only after unsatisfactory conditions have been corrected.

3.2 FUSE APPLICATIONS

A. Cartridge Fuses:

1. Motor Branch Circuits: Class RK5, time delay.

2. Non-motor Branch Circuits: Class RK1, time delay.

3.3 INSTALLATION

A. Install fuses in fusible devices. Arrange fuses so rating information is readable without removing fuse.

B. Install spare-fuse cabinet(s).

3.4 IDENTIFICATION

A. Install labels complying with requirements for identification specified in Division 26 Section "Identification for Electrical Systems" and indicating fuse replacement information on inside door of each fused switch and adjacent to each fuse block, socket, and holder.

END OF SECTION 26 28 13

SECTION 26 28 16 - ENCLOSED SWITCHES AND CIRCUIT BREAKERS

PART 1 - GENERAL

1.1 RELATED DOCUMENTS

A. Drawings and general provisions of the Trade Contract, including General and Supplementary Conditions and other Division 01 Specification Sections, apply to this Section.

1.2 SUMMARY

A. Section Includes:

1. Fusible switches.

2. Nonfusible switches.

3. Molded-case circuit breakers (MCCBs) for stand-alone enclosure use.

4. Molded-case switches.

5. Enclosures.

1.3 DEFINITIONS

A. NC: Normally closed.

B. NO: Normally open.

C. SPDT: Single pole, double throw.

1.4 ACTION SUBMITTALS

A. Product Data: For each type of enclosed switch, circuit breaker, accessory, and component indicated. Include dimensioned elevations, sections, weights, and manufacturers' technical data on features, performance, electrical characteristics, ratings, accessories, and finishes.

1. Enclosure types and details for types other than NEMA 250, Type 1.

2. Current and voltage ratings.

3. Short-circuit current ratings (interrupting and withstand, as appropriate).

4. Include evidence of NRTL listing for series rating of installed devices.

5. Detail features, characteristics, ratings, and factory settings of individual overcurrent protective devices, accessories, and auxiliary components.

6. Include time-current coordination curves (average melt) for each type and rating of overcurrent protective device; include selectable ranges for each type of overcurrent protective device.

B. Shop Drawings: For enclosed switches and circuit breakers. Include plans, elevations, sections, details, and attachments to other work.

1. Wiring Diagrams: For power, signal, and control wiring.

1.5 INFORMATIONAL SUBMITTALS

A. Field quality-control reports.

1. Test procedures used.

2. Test results that comply with requirements.

3. Results of failed tests and corrective action taken to achieve test results that comply with requirements.

B. Manufacturer's field service report.

1.6 CLOSEOUT SUBMITTALS

A. Operation and Maintenance Data: For enclosed switches and circuit breakers to include in emergency, operation, and maintenance manuals. In addition to items specified in Division 01 Section "Operation and Maintenance Data," include the following:

1. Manufacturer's written instructions for testing and adjusting enclosed switches and circuit breakers.

2. Time-current coordination curves (average melt) for each type and rating of overcurrent protective device; include selectable ranges for each type of overcurrent protective device.

1.7 QUALITY ASSURANCE

A. Source Limitations: Obtain enclosed switches and circuit breakers, overcurrent protective devices, components, and accessories, within same product category, from single source from single manufacturer.

B. Product Selection for Restricted Space: Drawings indicate maximum dimensions for enclosed switches and circuit breakers, including clearances between enclosures, and adjacent surfaces and other items. Comply with indicated maximum dimensions.

C. Electrical Components, Devices, and Accessories: Listed and labeled as defined in NFPA 70, by a qualified testing agency, and marked for intended location and application.

D. Comply with NFPA 70.

1.8 PROJECT CONDITIONS

A. Environmental Limitations: Rate equipment for continuous operation under the following conditions unless otherwise indicated:

1. Ambient Temperature: Not less than minus 22 deg F (minus 30 deg C) and not exceeding 104 deg F (40 deg C).

1.9 COORDINATION

A. Coordinate layout and installation of switches, circuit breakers, and components with equipment served and adjacent surfaces. Maintain required workspace clearances and required clearances for equipment access doors and panels.

PART 2 - PRODUCTS

2.1 FUSIBLE SWITCHES

A. Basis-of-Design Product: Subject to compliance with requirements, provide Square D; a brand of Schneider Electric, or comparable product by one of the following:

1. Eaton Electrical Inc.; Cutler-Hammer Business Unit.

2. General Electric Company; GE Consumer & Industrial - Electrical Distribution.

3. Siemens Energy & Automation, Inc.

B. Type HD, Heavy Duty, Single Throw, 600-V ac, 1200 A and Smaller: UL 98 and NEMA KS 1, horsepower rated, with clips or bolt pads to accommodate specified fuses, lockable handle with capability to accept three padlocks, and interlocked with cover in closed position.

C. Accessories:

1. Equipment Ground Kit: Internally mounted and labeled for copper and aluminum ground conductors.

2. Neutral Kit: Internally mounted; insulated, capable of being grounded and bonded; labeled for copper and aluminum neutral conductors.

3. Isolated Ground Kit: Internally mounted; insulated, capable of being grounded and bonded; labeled for copper and aluminum neutral conductors.

4. Class R Fuse Kit: Provides rejection of other fuse types when Class R fuses are specified.

5. Auxiliary Contact Kit: One NO/NC (Form "C") auxiliary contact(s), arranged to activate before switch blades open.

6. Hookstick Handle: Allows use of a hookstick to operate the handle.

7. Lugs: Compression type, suitable for number, size, and conductor material.

2.2 NONFUSIBLE SWITCHES

A. Basis-of-Design Product: Subject to compliance with requirements, provide Square D; a brand of Schneider Electric, or comparable product by one of the following:

1. Eaton Electrical Inc.; Cutler-Hammer Business Unit.

2. General Electric Company; GE Consumer & Industrial - Electrical Distribution.

3. Siemens Energy & Automation, Inc.

B. Type HD, Heavy Duty, Single Throw, 600-V ac, 1200 A and Smaller: UL 98 and NEMA KS 1, horsepower rated, lockable handle with capability to accept three padlocks, and interlocked with cover in closed position.

C. Accessories:

1. Equipment Ground Kit: Internally mounted and labeled for copper and aluminum ground conductors.

2. Neutral Kit: Internally mounted; insulated, capable of being grounded and bonded; labeled for copper and aluminum neutral conductors.

3. Isolated Ground Kit: Internally mounted; insulated, capable of being grounded and bonded; labeled for copper and aluminum neutral conductors.

4. Auxiliary Contact Kit: One NO/NC (Form "C") auxiliary contact(s), arranged to activate before switch blades open.

5. Hookstick Handle: Allows use of a hookstick to operate the handle.

6. Lugs: Compression type, suitable for number, size, and conductor material.

2.3 MOLDED-CASE CIRCUIT BREAKERS

A. Basis-of-Design Product: Subject to compliance with requirements, provide Square D; a brand of Schneider Electric, or comparable product by one of the following:

1. Eaton Electrical Inc.; Cutler-Hammer Business Unit.

2. General Electric Company; GE Consumer & Industrial - Electrical Distribution.

3. Siemens Energy & Automation, Inc.

B. General Requirements: Comply with UL 489, NEMA AB 1, and NEMA AB 3, with interrupting capacity to comply with available fault currents.

C. Thermal-Magnetic Circuit Breakers: Inverse time-current element for low-level overloads and instantaneous magnetic trip element for short circuits. Adjustable magnetic trip setting for circuit-breaker frame sizes 250 A and larger.

D. Current-Limiting Circuit Breakers: Frame sizes 400 A and smaller, and let-through ratings less than NEMA FU 1, RK-5.

E. Ground-Fault, Circuit-Interrupter (GFCI) Circuit Breakers: Single- and two-pole configurations with Class A ground-fault protection (6-mA trip).

F. Ground-Fault, Equipment-Protection (GFEP) Circuit Breakers: With Class B ground-fault protection (30-mA trip).

G. Features and Accessories:

1. Standard frame sizes, trip ratings, and number of poles.

2. Lugs: Compression type, suitable for number, size, trip ratings, and conductor material.

3. Application Listing: Appropriate for application; Type SWD for switching fluorescent lighting loads; Type HID for feeding fluorescent and high-intensity discharge lighting circuits.

4. Ground-Fault Protection: Comply with UL 1053; integrally mounted, self-powered type with mechanical ground-fault indicator; relay with adjustable pickup and time-delay settings, push-to-test feature, internal memory, and shunt trip unit; and three-phase, zero-sequence current transformer/sensor.

5. Shunt Trip: Trip coil energized from separate circuit, with coil-clearing contact.

6. Undervoltage Trip: Set to operate at 35 to 75 percent of rated voltage without intentional time delay.

7. Auxiliary Contacts: One SPDT switch with "a" and "b" contacts; "a" contacts mimic circuit-breaker contacts, "b" contacts operate in reverse of circuit-breaker contacts.

2.4 MOLDED-CASE SWITCHES

A. Basis-of-Design Product: Subject to compliance with requirements, provide Square D; a brand of Schneider Electric, or comparable product by one of the following:

1. Eaton Electrical Inc.; Cutler-Hammer Business Unit.

2. General Electric Company; GE Consumer & Industrial - Electrical Distribution.

3. Siemens Energy & Automation, Inc.

B. General Requirements: MCCB with fixed, high-set instantaneous trip only, and short-circuit withstand rating equal to equivalent breaker frame size interrupting rating.

C. Features and Accessories:

1. Standard frame sizes and number of poles.

2. Lugs: Compression type, suitable for number, size, trip ratings, and conductor material.

3. Ground-Fault Protection: Comply with UL 1053; remote-mounted and powered type with mechanical ground-fault indicator; relay with adjustable pickup and time-delay settings, push-to-test feature, internal memory, and shunt trip unit; and three-phase, zero-sequence current transformer/sensor.

4. Shunt Trip: Trip coil energized from separate circuit, with coil-clearing contact.

5. Undervoltage Trip: Set to operate at 35 to 75 percent of rated voltage without intentional time delay.

6. Auxiliary Contacts: One SPDT switch with "a" and "b" contacts; "a" contacts mimic switch contacts, "b" contacts operate in reverse of switch contacts.

2.5 ENCLOSURES

A. Enclosed Switches and Circuit Breakers: NEMA AB 1, NEMA KS 1, NEMA 250, and UL 50, to comply with environmental conditions at installed location.

1. Indoor, Dry and Clean Locations: NEMA 250, Type 1.

2. Outdoor Locations: NEMA 250, Type 3R.

3. Wet or Damp, Indoor Locations: NEMA 250, Type 3R

PART 3 - EXECUTION

3.1 EXAMINATION

A. Examine elements and surfaces to receive enclosed switches and circuit breakers for compliance with installation tolerances and other conditions affecting performance of the Work.

B. Proceed with installation only after unsatisfactory conditions have been corrected.

3.2 INSTALLATION

A. Install individual wall-mounted switches and circuit breakers with tops at uniform height unless otherwise indicated.

B. Comply with mounting and anchoring requirements specified in Division 26 Section "Vibration and Seismic Controls for Electrical Systems."

C. Temporary Lifting Provisions: Remove temporary lifting eyes, channels, and brackets and temporary blocking of moving parts from enclosures and components.

D. Install fuses in fusible devices.

E. Comply with NECA 1.

3.3 IDENTIFICATION

A. Comply with requirements in Division 26 Section "Identification for Electrical Systems."

1. Identify field-installed conductors, interconnecting wiring, and components; provide warning signs.

2. Label each enclosure with engraved metal or laminated-plastic nameplate.

3.4 FIELD QUALITY CONTROL

A. Perform tests and inspections.

1. Manufacturer's Field Service: Engage a factory-authorized service representative to inspect components, assemblies, and equipment installations, including connections, and to assist in testing.

B. Acceptance Testing Preparation:

1. Test insulation resistance for each enclosed switch and circuit breaker, component, connecting supply, feeder, and control circuit.

2. Test continuity of each circuit.

C. Tests and Inspections:

1. Perform each visual and mechanical inspection and electrical test stated in NETA Acceptance Testing Specification. Certify compliance with test parameters.

2. Correct malfunctioning units on-site, where possible, and retest to demonstrate compliance; otherwise, replace with new units and retest.

3. Test and adjust controls, remote monitoring, and safeties. Replace damaged and malfunctioning controls and equipment.

D. Enclosed switches and circuit breakers will be considered defective if they do not pass tests and inspections.

3.5 ADJUSTING

A. Adjust moving parts and operable components to function smoothly, and lubricate as recommended by manufacturer.

B. Set field-adjustable circuit-breaker trip ranges as specified in Division 26 Section "Overcurrent Protective Device Coordination Study".

END OF SECTION 26 28 16

SECTION 26 32 13 - ENGINE GENERATORS

PART 1 - GENERAL

1.1 RELATED DOCUMENTS

A. Drawings and general provisions of the Trade Contract, including General and Supplementary Conditions and Division 01 Specification Sections, apply to this Section.

1.2 SUMMARY

A. This Section includes packaged engine-generator sets for standby power supply with the following features:

1. Natural Gas engine.

2. Unit-mounted cooling system.

3. Unit-mounted control and monitoring.

4. Outdoor enclosure.

B. Related Sections include the following:

1. Division 26 Section "Transfer Switches" for transfer switches including sensors and relays to initiate automatic-starting and -stopping signals for engine-generator sets.

1.3 DEFINITIONS

A. Operational Bandwidth: The total variation from the lowest to highest value of a parameter over the range of conditions indicated, expressed as a percentage of the nominal value of the parameter.

1.4 ACTION SUBMITTALS

A. Product Data: For each type of packaged engine generator indicated. Include rated capacities, operating characteristics, and furnished specialties and accessories. In addition, include the following:

1. Thermal damage curve for generator.

2. Time-current characteristic curves for generator protective device.

B. Shop Drawings: Detail equipment assemblies and indicate dimensions, weights, loads, required clearances, method of field assembly, components, and location and size of each field connection.

1. Dimensioned outline plan and elevation drawings of engine-generator set and other components specified.

2. Design Calculations: Signed and sealed by a qualified professional engineer. Calculate requirements for selecting vibration isolators and seismic restraints and for designing vibration isolation bases.

3. Wiring Diagrams: Power, signal, and control wiring.

1.5 INFORMATIONAL SUBMITTALS

A. Qualification Data: For installer and manufacturer.

B. Source quality-control test reports.

1. Certified summary of prototype-unit test report.

2. Certified Test Reports: For components and accessories that are equivalent, but not identical, to those tested on prototype unit.

3. Certified Summary of Performance Tests: Certify compliance with specified requirement to meet performance criteria for sensitive loads.

4. Report of factory test on units to be shipped for this Project, showing evidence of compliance with specified requirements.

5. Report of sound generation.

6. Report of exhaust emissions showing compliance with applicable regulations.

7. Certified Torsional Vibration Compatibility: Comply with NFPA 110.

C. Field quality-control test reports.

D. Warranty: Special warranty specified in this Section.

1.6 CLOSEOUT SUBMITTALS

A. Operation and Maintenance Data: For packaged engine generators to include in emergency, operation, and maintenance manuals. In addition to items specified in Division 01 Section "Operation and Maintenance Data," include the following:

1. List of tools and replacement items recommended to be stored at Project for ready access. Include part and drawing numbers, current unit prices, and source of supply.

1.7 QUALITY ASSURANCE

A. Installer Qualifications: Manufacturer's authorized representative who is trained and approved for installation of units required for this Project.

1. Maintenance Proximity: Not more than four hours' normal travel time from Installer's place of business to Project site.
2. Engineering Responsibility: Preparation of data for vibration isolators of engine skid mounts, including Shop Drawings, based on testing and engineering analysis of manufacturer's standard units in assemblies similar to those indicated for this Project.

B. Manufacturer Qualifications: A qualified manufacturer. Maintain, within 200 miles (321 km) of Project site, a service center capable of providing training, parts, and emergency maintenance repairs.

C. Source Limitations: Obtain packaged generator sets and auxiliary components through one source from a single manufacturer.

D. Electrical Components, Devices, and Accessories: Listed and labeled as defined in NFPA 70, Article 100, by a testing agency acceptable to authorities having jurisdiction, and marked for intended use.

E. Comply with ASME B15.1.

F. Comply with NFPA 37.

G. Comply with NFPA 70.

H. Comply with NFPA 110 requirements for Level 1emergency power supply system.

I. Comply with UL 2200.

J. Engine Exhaust Emissions: Comply with applicable state and local government requirements.

K. Noise Emission: Comply with applicable state and local government requirements for maximum noise level at adjacent property boundaries due to sound emitted by generator set including engine, engine exhaust, engine cooling-air intake and discharge, and other components of installation.

1.8 PROJECT CONDITIONS

A. Environmental Conditions: Engine-generator system shall withstand the following environmental conditions without mechanical or electrical damage or degradation of performance capability:

1. Ambient Temperature: Minus 15 to plus 40 deg C.

2. Relative Humidity: 0 to 95 percent.

3. Altitude: Sea level to 1000 feet (300 m).

1.9 COORDINATION

A. Coordinate size and location of concrete bases for package engine generators. Cast anchor-bolt inserts into bases. Concrete, reinforcement, and formwork requirements are specified in Division 03.

B. Coordinate size and location of roof curbs, equipment supports, and roof penetrations for remote radiators. These items are specified in Division 07 Section "Roof Accessories."

1.10 WARRANTY

A. Special Warranty: Manufacturer's standard form in which manufacturer agrees to repair or replace components of packaged engine generators and associated auxiliary components that fail in materials or workmanship within specified warranty period.

1. Warranty Period: 10 years from date of Substantial Completion.

1.11 MAINTENANCE SERVICE

A. Initial Maintenance Service: Beginning at Substantial Completion, provide 12 months' full maintenance by skilled employees of manufacturer's designated service organization. Include quarterly exercising to check for proper starting, load transfer, and running under load. Include routine preventive maintenance as recommended by manufacturer and adjusting as required for proper operation. Provide parts and supplies same as those used in the manufacture and installation of original equipment.

PART 2 - PRODUCTS

2.1 MANUFACTURERS

A. Basis-of-Design Product: Subject to compliance with requirements, provide Caterpillar.; Generator Division, or a comparable product by one of the following:

1. Kohler.

2. Onan/Cummins Power Generation; Industrial Business Group.

3. Spectrum Detroit Diesel.

2.2 ENGINE-GENERATOR SET

A. Factory-assembled and -tested, engine-generator set.

B. Mounting Frame: Maintain alignment of mounted components without depending on concrete foundation; and have lifting attachments.

1. Rigging Diagram: Inscribed on metal plate permanently attached to mounting frame to indicate location and lifting capacity of each lifting attachment and generator-set center of gravity.

C. Capacities and Characteristics:

1. Power Output Ratings: Standby rated, nominal kw as indicated on plans.

2. Output Connections: Three-phase, four wire.

3. Nameplates: For each major system component to identify manufacturer's name and address, and model and serial number of component.

D. Generator-Set Performance:

1. Steady-State Voltage Operational Bandwidth: 3 percent of rated output voltage from no load to full load.

2. Transient Voltage Performance: Not more than 20 percent variation for 50 percent step-load increase or decrease. Voltage shall recover and remain within the steady-state operating band within three seconds.

3. Steady-State Frequency Operational Bandwidth: 0.5 percent of rated frequency from no load to full load.

4. Steady-State Frequency Stability: When system is operating at any constant load within the rated load, there shall be no random speed variations outside the steady-state operational band and no hunting or surging of speed.

5. Transient Frequency Performance: Less than 5 percent variation for 50 percent step-load increase or decrease. Frequency shall recover and remain within the steady-state operating band within five seconds.

6. Output Waveform: At no load, harmonic content measured line to line or line to neutral shall not exceed 5 percent total and 3 percent for single harmonics. Telephone influence factor, determined according to NEMA MG 1, shall not exceed 50 percent.

7. Sustained Short-Circuit Current: For a 3-phase, bolted short circuit at system output terminals, system shall supply a minimum of 250 percent of rated full-load current for not less than 10 seconds and then clear the fault automatically, without damage to generator system components.

8. Start Time: Comply with NFPA 110, Type 10, system requirements.

2.3 ENGINE

A. Fuel: Natural gas.

B. Rated Engine Speed: 1800 rpm.

C. Maximum Piston Speed for Four-Cycle Engines: 2250 fpm (11.4 m/s).

D. Lubrication System: The following items are mounted on engine or skid:

1. Filter and Strainer: Rated to remove 90 percent of particles 5 micrometers and smaller while passing full flow.

2. Thermostatic Control Valve: Control flow in system to maintain optimum oil temperature. Unit shall be capable of full flow and is designed to be fail-safe.

3. Crankcase Drain: Arranged for complete gravity drainage to an easily removable container with no disassembly and without use of pumps, siphons, special tools, or appliances.

E. Engine Fuel System:

1. Main Fuel Pump: Mounted on engine. Pump ensures adequate primary fuel flow under starting and load conditions.

2. Relief-Bypass Valve: Automatically regulates pressure in fuel line and returns excess fuel to source.

F. Coolant Jacket Heater: Electric-immersion type, factory installed in coolant jacket system. Comply with NFPA 110 requirements for Level 1 equipment for heater capacity.

G. Governor: Adjustable isochronous, with speed sensing.

H. Cooling System: Closed loop, liquid cooled, with radiator factory mounted on engine-generator-set mounting frame and integral engine-driven coolant pump.

1. Coolant: Solution of 50 percent ethylene-glycol-based antifreeze and 50 percent water, with anticorrosion additives as recommended by engine manufacturer.

2. Size of Radiator: Adequate to contain expansion of total system coolant from cold start to 110 percent load condition.

3. Expansion Tank: Constructed of welded steel plate and rated to withstand maximum closed-loop coolant system pressure for engine used. Equip with gage glass and petcock.

4. Temperature Control: Self-contained, thermostatic-control valve modulates coolant flow automatically to maintain optimum constant coolant temperature as recommended by engine manufacturer.

I. Muffler/Silencer: Critical type, sized as recommended by engine manufacturer and selected with exhaust piping system to not exceed engine manufacturer's engine backpressure requirements.

1. Minimum sound attenuation of 25 dB at 500 Hz.

2. Sound level measured at a distance of 10 feet (3 m) from exhaust discharge after installation is complete shall be 85 dBA or less.

J. Air-Intake Filter: Heavy-duty, engine-mounted air cleaner with replaceable dry-filter element and "blocked filter" indicator.

K. Starting System: 24-V electric, with negative ground.

1. Components: Sized so they will not be damaged during a full engine-cranking cycle with ambient temperature at maximum specified in Part 1 "Project Conditions" Article.

2. Cranking Motor: Heavy-duty unit that automatically engages and releases from engine flywheel without binding.

3. Cranking Cycle: As required by NFPA 110 for Level 1 system.

4. Battery: Adequate capacity within ambient temperature range specified in Part 1 "Project Conditions" Article to provide specified cranking cycle at least three times without recharging.

5. Battery Cable: Size as recommended by engine manufacturer for cable length indicated. Include required interconnecting conductors and connection accessories.

6. Battery Compartment: Factory fabricated of metal with acid-resistant finish and thermal insulation. Thermostatically controlled heater shall be arranged to maintain battery above 10 deg C regardless of external ambient temperature within range specified in Part 1 "Project Conditions" Article. Include accessories required to support and fasten batteries in place.

7. Battery-Charging Alternator: Sealed lead-acid factory mounted on engine with solid-state voltage regulation and 35-A minimum continuous rating.

8. Battery Charger: Current-limiting, automatic-equalizing and float-charging type, compatible with battery type provided. Unit shall comply with UL 1236 and include the following features:

   a. Operation: Equalizing-charging rate of 10 A shall be initiated automatically after battery has lost charge until an adjustable equalizing voltage is achieved at battery terminals. Unit shall then be automatically switched to a lower float-charging mode and shall continue to operate in that mode until battery is discharged again.
   b. Automatic Temperature Compensation: Adjust float and equalize voltages for variations in ambient temperature from minus 40 deg C to plus 60 deg C to prevent overcharging at high temperatures and undercharging at low temperatures.
   c. Automatic Voltage Regulation: Maintain constant output voltage regardless of input voltage variations up to plus or minus 10 percent.
   d. Ammeter and Voltmeter: Flush mounted in door. Meters shall indicate charging rates.
   e. Safety Functions: Sense abnormally low battery voltage and close contacts providing low battery voltage indication on control and monitoring panel. Sense high battery voltage and loss of ac input or dc output of battery charger. Either condition shall close contacts that provide a battery-charger malfunction indication at system control and monitoring panel.

2.4 CONTROL AND MONITORING

A. Automatic Starting System Sequence of Operation: When mode-selector switch on the control and monitoring panel is in the automatic position, remote-control contacts in one or more separate automatic transfer switches initiate starting and stopping of generator set. When mode-selector switch is switched to the on position, generator set starts. The off position of same switch initiates generator-set shutdown. When generator set is running, specified system or equipment failures or derangements automatically shut down generator set and initiate alarms. Operation of a remote emergency-stop switch also shuts down generator set.

B. Manual Starting System Sequence of Operation: Switching on-off switch on the generator control panel to the on position starts generator set. The off position of same switch initiates generator-set shutdown. When generator set is running, specified system or equipment failures or derangements automatically shut down generator set and initiate alarms. Operation of a remote emergency-stop switch also shuts down generator set.

C. Configuration: Operating and safety indications, protective devices, basic system controls, and engine gages shall be grouped in a common control and monitoring panel mounted on the generator set. Mounting method shall isolate the control panel from generator-set vibration.

D. Indicating and Protective Devices and Controls: As required by NFPA 110 for Level 1 system, and the following:

1. AC voltmeter.

2. AC ammeter.

3. AC frequency meter.

4. DC voltmeter (alternator battery charging).

5. Engine-coolant temperature gage.

6. Engine lubricating-oil pressure gage.

7. Running-time meter.

8. Ammeter-voltmeter, phase-selector switch(es).

9. Generator-voltage adjusting rheostat.

10. Fuel tank derangement alarm.

11. Fuel tank high-level shutdown of fuel supply alarm.

12. Generator overload.

E. Supporting Items: Include sensors, transducers, terminals, relays, and other devices and include wiring required to support specified items. Locate sensors and other supporting items on engine or generator, unless otherwise indicated.

F. Connection to Data Link: A separate terminal block, factory wired to Form C dry contacts, for each alarm and status indication is reserved for connections for data-link transmission of indications to remote data terminals.

2.5 GENERATOR OVERCURRENT AND FAULT PROTECTION

A. Generator Circuit Breaker: Molded-case, electronic-trip type; 100 percent rated; complying with UL 489.

1. Tripping Characteristics: Adjustable long-time and short-time delay and instantaneous.

2. Trip Settings: Selected to coordinate with generator thermal damage curve.

3. Shunt Trip: Connected to trip breaker when generator set is shut down by other protective devices.

4. Mounting: Adjacent to or integrated with control and monitoring panel.

B. Ground-Fault Indication: Comply with NFPA 70, "Emergency System" signals for ground-fault. Integrate ground-fault alarm indication with other generator-set alarm indications.

2.6 GENERATOR, EXCITER, AND VOLTAGE REGULATOR

A. Comply with NEMA MG 1.

B. Drive: Generator shaft shall be directly connected to engine shaft. Exciter shall be rotated integrally with generator rotor.

C. Electrical Insulation: Class H or Class F.

D. Stator-Winding Leads: Brought out to terminal box to permit future reconnection for other voltages if required.

E. Construction shall prevent mechanical, electrical, and thermal damage due to vibration, overspeed up to 125 percent of rating, and heat during operation at 110 percent of rated capacity.

F. Enclosure: Dripproof.

G. Instrument Transformers: Mounted within generator enclosure.

H. Voltage Regulator: Solid-state type, separate from exciter, providing performance as specified.

1. Adjusting rheostat on control and monitoring panel shall provide plus or minus 5 percent adjustment of output-voltage operating band.

I. Strip Heater: Thermostatically controlled unit arranged to maintain stator windings above dew point.

J. Windings: Two-thirds pitch stator winding and fully linked amortisseur winding.

K. Subtransient Reactance: 12 percent, maximum.

2.7 OUTDOOR GENERATOR-SET ENCLOSURE

A. Description: Vandal-resistant, weatherproof steel housing, wind resistant up to 120 mph. Multiple panels shall be lockable and provide adequate access to components requiring maintenance. Panels shall be removable by one person without tools. Instruments and control shall be mounted within enclosure.

B. Engine Cooling Airflow through Enclosure: Maintain temperature rise of system components within required limits when unit operates at 110 percent of rated load for 2 hours with ambient temperature at top of range specified in system service conditions.

1. Louvers: Fixed-engine, cooling-air inlet and discharge. Storm-proof and drainable louvers prevent entry of rain and snow.

2. Automatic Dampers: At engine cooling-air inlet and discharge. Dampers shall be closed to reduce enclosure heat loss in cold weather when unit is not operating.

2.8 VIBRATION ISOLATION DEVICES

A. Restrained Spring Isolators: Freestanding, steel, open-spring isolators with seismic restraint.

1. Housing: Steel with resilient vertical-limit stops to prevent spring extension due to wind loads or if weight is removed; factory-drilled baseplate bonded to 1/4-inch- (6-mm-) thick, elastomeric isolator pad attached to baseplate underside; and adjustable equipment mounting and leveling bolt that acts as blocking during installation.

2. Outside Spring Diameter: Not less than 80 percent of compressed height of the spring at rated load.

3. Minimum Additional Travel: 50 percent of required deflection at rated load.

4. Lateral Stiffness: More than 80 percent of rated vertical stiffness.

5. Overload Capacity: Support 200 percent of rated load, fully compressed, without deformation or failure.

2.9 FINISHES

A. Indoor and Outdoor Enclosures and Components: Manufacturer's standard finish over corrosion-resistant pretreatment and compatible primer. Color preference is white.

2.10 SOURCE QUALITY CONTROL

A. Prototype Testing: Factory test engine-generator set using same engine model, constructed of identical or equivalent components and equipped with identical or equivalent accessories.

1. Tests: Comply with NFPA 110, Level 1 Energy Converters and with IEEE 115.

B. Project-Specific Equipment Tests: Before shipment, factory test engine-generator set and other system components and accessories manufactured specifically for this Project. Perform tests at rated load and power factor. Include the following tests:

1. Test components and accessories furnished with installed unit that are not identical to those on tested prototype to demonstrate compatibility and reliability.

2. Full load run.

3. Maximum power.

4. Voltage regulation.

5. Transient and steady-state governing.

6. Single-step load pickup.

7. Safety shutdown.

8. Provide 14 days' advance notice of tests and opportunity for observation of tests by Owner's representative.

9. Report factory test results within 10 days of completion of test.

PART 3 - EXECUTION

3.1 EXAMINATION

A. Examine areas, equipment bases, and conditions, with Installer present, for compliance with requirements for installation and other conditions affecting packaged engine-generator performance.

B. Examine roughing-in of piping systems and electrical connections. Verify actual locations of connections before packaged engine-generator installation.

C. Proceed with installation only after unsatisfactory conditions have been corrected.

3.2 INSTALLATION

A. Comply with packaged engine-generator manufacturers' written installation and alignment instructions and with NFPA 110.

B. Install packaged engine generator to provide access, without removing connections or accessories, for periodic maintenance.

C. Install packaged engine generator with restrained spring isolators having a minimum deflection of 1 inch (25 mm) on 4-inch- (100-mm-) high concrete base. Secure sets to anchor bolts

installed in concrete bases. Concrete base construction is specified in Division 26 Section "Vibration and Seismic Controls for Electrical Systems."

D. Electrical Wiring: Install electrical devices furnished by equipment manufacturers but not specified to be factory mounted.

3.3 CONNECTIONS

A. Piping installation requirements are specified in Division 23 Sections. Drawings indicate general arrangement of piping and specialties.

B. Connect fuel system piping adjacent to packaged engine generator to allow service and maintenance.

C. Connect fuel piping to engines with a gate valve and union and flexible connector.

1. Natural-gas piping, valves, and specialties for gas distribution are specified in Division 23 Section "Facility Natural-Gas Piping."

D. Ground equipment according to Division 26 Section "Grounding and Bonding for Electrical Systems."

E. Connect wiring according to Division 26 Section "Low-Voltage Electrical Power Conductors and Cables."

3.4 IDENTIFICATION

A. Identify system components according to Division 26 Section "Identification for Electrical Systems."

3.5 FIELD QUALITY CONTROL

A. Perform tests and inspections and prepare test reports.

1. Manufacturer's Field Service: Engage a factory-authorized service representative to inspect components, assemblies, and equipment installations, including connections, and to assist in testing.

B. Tests and Inspections:

1. Perform tests recommended by manufacturer and each electrical test and visual and mechanical inspection for "AC Generators and for Emergency Systems" specified in NETA Acceptance Testing Specification. Certify compliance with test parameters.

2. NFPA 110 Acceptance Tests: Perform tests required by NFPA 110 that are additional to those specified here including, but not limited to, single-step full-load pickup test.

3. Battery Tests: Equalize charging of battery cells according to manufacturer's written instructions. Record individual cell voltages.

a. Measure charging voltage and voltages between available battery terminals for full-charging and float-charging conditions. Check electrolyte level and specific gravity under both conditions.
b. Test for contact integrity of all connectors. Perform an integrity load test and a capacity load test for the battery.
c. Verify acceptance of charge for each element of the battery after discharge.
d. Verify that measurements are within manufacturer's specifications.

4. Battery-Charger Tests: Verify specified rates of charge for both equalizing and float-charging conditions.

5. System Integrity Tests: Methodically verify proper installation, connection, and integrity of each element of engine-generator system before and during system operation. Check for air, exhaust, and fluid leaks.

6. Exhaust-System Back-Pressure Test: Use a manometer with a scale exceeding 40-inch wg (120 kPa). Connect to exhaust line close to engine exhaust manifold. Verify that back pressure at full-rated load is within manufacturer's written allowable limits for the engine.

7. Exhaust Emissions Test: Comply with applicable government test criteria.

8. Voltage and Frequency Transient Stability Tests: Use recording oscilloscope to measure voltage and frequency transients for 50 and 100 percent step-load increases and decreases, and verify that performance is as specified.

9. Harmonic-Content Tests: Measure harmonic content of output voltage under 25 percent and at 100 percent of rated linear load. Verify that harmonic content is within specified limits.

10. Noise Level Tests: Measure A-weighted level of noise emanating from generator-set installation, including engine exhaust and cooling-air intake and discharge, at four locations on the property line, and compare measured levels with required values.

C. Coordinate tests with tests for transfer switches and run them concurrently.

D. Test instruments shall have been calibrated within the last 12 months, traceable to standards of NIST, and adequate for making positive observation of test results. Make calibration records available for examination on request.

E. Leak Test: After installation, charge system and test for leaks. Repair leaks and retest until no leaks exist.

F. Operational Test: After electrical circuitry has been energized, start units to confirm proper motor rotation and unit operation.

G. Test and adjust controls and safeties. Replace damaged and malfunctioning controls and equipment.

H. Remove and replace malfunctioning units and retest as specified above.

I. Retest: Correct deficiencies identified by tests and observations and retest until specified requirements are met.

J. Report results of tests and inspections in writing. Record adjustable relay settings and measured insulation resistances, time delays, and other values and observations. Attach a label or tag to each tested component indicating satisfactory completion of tests.

3.6 DEMONSTRATION

A. Engage a factory-authorized service representative to train Owner's maintenance personnel to adjust, operate, and maintain packaged engine generators.

END OF SECTION 26 32 13

SECTION 26 33 53 - STATIC UNINTERRUPTIBLE POWER SUPPLY

PART 1 - GENERAL

1.1 RELATED DOCUMENTS

A. Drawings and general provisions of the Trade Contract, including General and Supplementary Conditions and Division 01 Specification Sections, apply to this Section.

1.2 SUMMARY

A. Section Includes:

1. Three-phase, on-line, double-conversion, static-type, UPS units with the following features:

a. Surge suppression.

b. Input harmonics reduction.

c. Rectifier-charger.

d. Inverter.

e. Static bypass transfer switch.

f. Battery and battery disconnect device.

g. Internal maintenance bypass/isolation switch.

h. Remote monitoring.

1.3 DEFINITIONS

A. EMI: Electromagnetic interference.

B. LCD: Liquid-crystal display.

C. LED: Light-emitting diode.

D. PC: Personal computer.

E. THD: Total harmonic distortion.

F. UPS: Uninterruptible power supply.

1.4 PERFORMANCE REQUIREMENTS

A. Seismic Performance: UPS shall withstand the effects of earthquake motions determined according to ASCE/SEI 7

1. The term "withstand" means "the unit will remain in place without separation of any parts from the device when subjected to the seismic forces specified.

1.5 ACTION SUBMITTALS

A. Product Data: For each type of product indicated. Include data on features, components, ratings, and performance.

B. Shop Drawings: For UPS. Include plans, elevations, sections, details, and attachments to other work.

1. Detail equipment assemblies and indicate dimensions, weights, components, and location and identification of each field connection. Show access, workspace, and clearance requirements; details of control panels; and battery arrangement.

2. Wiring Diagrams: For power, signal, and control wiring.

1.6 INFORMATIONAL SUBMITTALS

A. Qualification Data: For qualified testing agency.

B. Seismic Qualification Certificates: For UPS equipment, from manufacturer.

1. Basis for Certification: Indicate whether withstand certification is based on actual test of assembled components or on calculation.

2. Dimensioned Outline Drawings of Equipment Unit: Identify center of gravity and locate and describe mounting and anchorage provisions.

3. Detailed description of equipment anchorage devices on which the certification is based and their installation requirements.

C. Manufacturer Certificates: For each product, from manufacturer.

D. Factory Test Reports: Comply with specified requirements.

E. Field quality-control reports.

F. Performance Test Reports: Indicate test results compared with specified performance requirements, and provide justification and resolution of differences if values do not agree.

G. Warranties: Sample of special warranties.

1.7 CLOSEOUT SUBMITTALS

A. Operation and Maintenance Data: For UPS units to include in emergency, operation, and maintenance manuals.

1. Cabinet Ventilation Filters: One complete set(s).

1.8 QUALITY ASSURANCE

A. Electrical Components, Devices, and Accessories: Listed and labeled as defined in NFPA 70, by a qualified testing agency, and marked for intended location and application.

B. UL Compliance: Listed and labeled under UL 1778 by an NRTL.

1.9 WARRANTY

A. Special Battery Warranties: Specified form in which manufacturer and Installer agree to repair or replace UPS system storage batteries that fail in materials or workmanship within specified warranty period.

1. Warranted Cycle Life for Valve-Regulated, Lead-Calcium Batteries: Equal to or greater than that represented in manufacturer's published table, including figures corresponding to the following, based on annual average battery temperature of 77 deg F (25 deg C):

Discharge Rate	Discharge Duration	Discharge End Voltage	Cycle Life
8 hours	8 hours	1.67	6 cycles
30 minutes	30 minutes	1.67	20 cycles
15 minutes	45 seconds	1.67	120 cycles

2. Special Warranty Period: Two years from date of Substantial Completion.

PART 2 - PRODUCTS

2.1 OPERATIONAL REQUIREMENTS

A. Automatic operation includes the following:

1. Normal Conditions: Load is supplied with power flowing from the normal power input terminals, through the rectifier-charger and inverter, with the battery connected in parallel with the rectifier-charger output.

2. Abnormal Supply Conditions: If normal supply deviates from specified and adjustable voltage, voltage waveform, or frequency limits, the battery supplies energy to maintain constant, regulated inverter power output to the load without switching or disturbance.

3. If normal power fails, energy supplied by the battery through the inverter continues supply-regulated power to the load without switching or disturbance.

4. When power is restored at the normal supply terminals of the system, controls automatically synchronize the inverter with the external source before transferring the load. The rectifier-charger then supplies power to the load through the inverter and simultaneously recharges the battery.

5. If the battery becomes discharged and normal supply is available, the rectifier-charger charges the battery. On reaching full charge, the rectifier-charger automatically shifts to float-charge mode.

6. If any element of the UPS system fails and power is available at the normal supply terminals of the system, the static bypass transfer switch switches the load to the normal ac supply circuit without disturbance or interruption.

7. If a fault occurs in the system supplied by the UPS, and current flows in excess of the overload rating of the UPS system, the static bypass transfer switch operates to bypass the fault current to the normal ac supply circuit for fault clearing.

8. When the fault has cleared, the static bypass transfer switch returns the load to the UPS system.

9. If the battery is disconnected, the UPS continues to supply power to the load with no degradation of its regulation of voltage and frequency of the output bus.

B. Manual operation includes the following:

1. Turning the inverter off causes the static bypass transfer switch to transfer the load directly to the normal ac supply circuit without disturbance or interruption.

2. Turning the inverter on causes the static bypass transfer switch to transfer the load to the inverter.

C. Maintenance Bypass/Isolation Switch Operation: Switch is interlocked so it cannot be operated unless the static bypass transfer switch is in the bypass mode. Device provides manual selection among the three conditions in subparagraphs below without interrupting supply to the load during switching:

1. Full Isolation: Load is supplied, bypassing the UPS. Normal UPS ac input circuit, static bypass transfer switch, and UPS load terminals are completely disconnected from external circuits.

2. Maintenance Bypass: Load is supplied, bypassing the UPS. UPS ac supply terminals are energized to permit operational checking, but system load terminals are isolated from the load.

3. Normal: Normal UPS ac supply terminals are energized and the load is supplied through either the static bypass transfer switch and the UPS rectifier-charger and inverter, or the battery and the inverter.

D. Environmental Conditions: The UPS shall be capable of operating continuously in the following environmental conditions without mechanical or electrical damage or degradation of operating capability, except battery performance.

1. Ambient Temperature for Electronic Components: 32 to 104 deg F (0 to 40 deg C).

2. Ambient Temperature for Battery: 41 to 95 deg F (5 to 35 deg C).

3. Relative Humidity: 0 to 95 percent, noncondensing.

4. Altitude: Sea level to 4000 feet (1220 m).

2.2 PERFORMANCE REQUIREMENTS

A. The UPS shall perform as specified in this article while supplying rated full-load current, composed of any combination of linear and nonlinear load, up to 100 percent nonlinear load

with a load crest factor of 3.0, under the following conditions or combinations of the following conditions:

1. Inverter is switched to battery source.
2. Steady-state ac input voltage deviates up to plus or minus 10 percent from nominal voltage.
3. Steady-state input frequency deviates up to plus or minus 5 percent from nominal frequency.
4. THD of input voltage is 15 percent or more with a minimum crest factor of 3.0, and the largest single harmonic component is a minimum of 5 percent of the fundamental value.
5. Load is 30 percent unbalanced continuously.

B. Minimum Duration of Supply: If battery is sole energy source supplying rated full UPS load current at 80 percent power factor, duration of supply is five minutes.

C. Input Voltage/configuration: 208Y, 3-phase, 3W.

D. Output Voltage/configuration: 208/120V, 3-phase, 4W.

E. Output Capacity: 10 KVA.

F. Input Voltage Tolerance: System steady-state and transient output performance remains within specified tolerances when steady-state ac input voltage varies plus 10, minus 15 percent from nominal voltage.

G. Overall UPS Efficiency: Equal to or greater than 86 percent at 100 percent load, 85 percent at 75 percent load, and 84 percent at 50 percent load.

H. Maximum Acoustical Noise: 58dB "A" weighting, emanating from any UPS component under any condition of normal operation, measured 36 inches from nearest surface of component enclosure.

I. Maximum Energizing Inrush Current: Six times the full-load current.

J. Maximum AC Output-Voltage Regulation for Loads up to 50 Percent Unbalanced: Plus or minus 2 percent over the full range of battery voltage.

K. Output Frequency: 60 Hz, plus or minus 0.5 percent over the full range of input voltage, load, and battery voltage.

L. Limitation of harmonic distortion of input current to the UPS shall be as follows:

1. Description: Either a tuned harmonic filter or an arrangement of rectifier-charger circuits shall limit THD to 10 percent, maximum, at rated full UPS load current, for power sources with X/R ratio between 2 and 30.

M. Maximum Harmonic Content of Output-Voltage Waveform: 5 percent rms total and 3 percent rms for any single harmonic, for rated full load with THD up to 50 percent, with a load crest factor of 3.0.

N. Minimum Overload Capacity of UPS at Rated Voltage: 125 percent of rated full load for 10 minutes, and 150 percent for 30 seconds in all operating modes.

O. Maximum Output-Voltage Transient Excursions from Rated Value: For the following instantaneous load changes, stated as percentages of rated full UPS load, voltage shall remain within stated percentages of rated value and recover to, and remain within, plus or minus 2 percent of that value within 100 ms:

1. 50 Percent: Plus or minus 5 percent.
2. 100 Percent: Plus or minus 5 percent.
3. Loss of AC Input Power: Plus or minus 1 percent.
4. Restoration of AC Input Power: Plus or minus 1 percent.

P. Input Power Factor: A minimum of 0.70 lagging when supply voltage and current are at nominal rated values and the UPS is supplying rated full-load current.

Q. EMI Emissions: Comply with FCC Rules and Regulations and with 47 CFR 15 for Class A equipment.

2.3 UPS SYSTEMS

A. Basis-of-Design Product: Subject to compliance with requirements, provide product indicated on Drawings or comparable product by one of the following:

1. Eaton Corporation; Powerware Division.
2. Liebert Corporation; a division of Emerson.
3. MGE UPS SYSTEMS.
4. Mitsubishi Electric Automation, Inc.
5. Toshiba Corporation; Industrial Systems.

B. Electronic Equipment: Solid-state devices using hermetically sealed, semiconductor elements. Devices include rectifier-charger, inverter, static bypass transfer switch, and system controls.

C. Enclosures: Comply with NEMA 250, Type 1, unless otherwise indicated.

D. Control Assemblies: Mount on modular plug-ins, readily accessible for maintenance.

E. Surge Suppression: Protect internal UPS components from surges that enter at each ac power input connection including main disconnect switch, static bypass transfer switch. Protect rectifier-charger, inverter, controls, and output components.

1. Use factory-installed surge suppressors tested according to IEEE C62.41.1 and IEEE C62.41.2, Category B.
2. Additional Surge Protection: Protect internal UPS components from low-frequency, high-energy voltage surges described in IEEE C62.41.1 and IEEE C62.41.2. Design the circuits connecting with external power sources and select circuit elements, conductors, conventional surge suppressors, and rectifier components and controls so input assemblies will have adequate mechanical strength and thermal and current-carrying

capacity to withstand stresses imposed by 40-Hz, 180 percent voltage surges described in IEEE C62.41.1 and IEEE C62.41.2.

F. Maintainability Features: Mount rectifier-charger and inverter sections and the static bypass transfer switch on modular plug-ins, readily accessible for maintenance.

G. Seismic-Restraint Design: UPS assemblies, subassemblies, and components (and fastenings and supports, mounting, and anchorage devices for them) shall be designed and fabricated to withstand static and seismic forces.

H. UPS Cabinet Ventilation: Redundant fans or blowers draw in ambient air near the bottom of cabinet and discharge it near the top rear.

I. Output Circuit Neutral Bus, Conductor, and Terminal Ampacity: Rated phase current times a multiple of 1.73, minimum.

2.4 RECTIFIER-CHARGER

A. Capacity: Adequate to supply the inverter during rated full output load conditions and simultaneously recharge the battery from fully discharged condition to 95 percent of full charge within 10 times the rated discharge time for duration of supply under battery power at full load.

B. Output Ripple: Limited by output filtration to less than 0.5 percent of rated current, peak to peak.

C. Control Circuits: Immune to frequency variations within rated frequency ranges of normal and emergency power sources.

1. Response Time: Field adjustable for maximum compatibility with local generator-set power source.

D. Battery Float-Charging Conditions: Comply with battery manufacturer's written instructions for battery terminal voltage and charging current required for maximum battery life.

2.5 INVERTER

A. Description: Pulse-width modulated, with sinusoidal output.

B. Description: Pulse-width modulated, with sinusoidal output. Include a bypass phase synchronization window adjustment to optimize compatibility with local engine-generator-set power source.

2.6 STATIC BYPASS TRANSFER SWITCH

A. Description: Solid-state switching device providing uninterrupted transfer. A contactor or electrically operated circuit breaker automatically provides electrical isolation for the switch.

B. Switch Rating: Continuous duty at the rated full UPS load current, minimum.

2.7 BATTERY

A. Description: Valve-regulated, recombinant, lead-calcium units, factory assembled in an isolated compartment of UPS cabinet, complete with battery disconnect switch.

B. Basis-of-Design Product: Subject to compliance with requirements, provide product indicated on Drawings or comparable product by one of the following:

1. C&D Technologies, Inc.; Standby Power Division.
2. Eaton Corporation; Powerware Division.
3. EnerSys.
4. Panasonic Corporation of North America; Panasonic Industrial Company.

C. Seismic-Restraint Design: Battery racks, cabinets, assemblies, subassemblies, and components (and fastenings and supports, mounting, and anchorage devices for them) shall be designed and fabricated to withstand static and seismic forces.

2.8 CONTROLS AND INDICATIONS

A. Description: Group displays, indications, and basic system controls on a common control panel on front of UPS enclosure.

B. Minimum displays, indicating devices, and controls include those in lists below. Provide sensors, transducers, terminals, relays, and wiring required to support listed items. Alarms include audible signals and visual displays.

1. Basic status condition indications shall include the following:
   a. Normal operation.
   b. Load-on bypass.
   c. Load-on battery.
   d. Inverter off.
   e. Alarm condition.
2. Controls shall include the following:
   a. Inverter on-off.
   b. UPS start.
   c. Battery test.
   d. Alarm silence/reset.

2.9 MAINTENANCE BYPASS/ISOLATION SWITCH

A. Description: Manually operated switch or arrangement of switching devices with mechanically actuated contact mechanism arranged to route the flow of power to the load around the rectifier-charger, inverter, and static bypass transfer switch.

1. Switch shall be electrically and mechanically interlocked to prevent interrupting power to the load when switching to bypass mode.
2. Switch shall electrically isolate other UPS components to permit safe servicing.

B. Comply with NEMA PB 2 and UL 891.

C. Switch Rating: Continuous duty at rated full UPS load current.

D. Mounting Provisions: Internal to system cabinet.

2.10 MONITORING BY REMOTE COMPUTER

A. Description: Communication module in unit control panel provides capability for remote monitoring of status, parameters, and alarms specified in "Controls and Indications" Article. The remote computer and the connecting signal wiring are not included in this Section. Include the following features:

1. Connectors and network interface units or modems for data transmission via Ethernet link.
2. Software designed for control and monitoring of UPS functions and to provide on-screen explanations, interpretations, diagnosis, action guidance, and instructions for use of monitoring indications and development of meaningful reports. Permit storage and analysis of power-line transient records. Designs for Windows applications, software, and computer are not included in this Section.
3. Software and Hardware: Compatible with that specified in Division 26 Section "Electrical Power Monitoring and Control."

PART 3 - EXECUTION

3.1 EXAMINATION

A. Examine areas and conditions, with Installer present, for compliance with requirements for conditions affecting performance of the UPS.

B. Proceed with installation only after unsatisfactory conditions have been corrected.

3.2 INSTALLATION

A. Equipment Mounting: Secure UPS to floor with anchor bolts.

B. Maintain minimum clearances and workspace at equipment according to manufacturer's written instructions and NFPA 70.

C. Connections: Interconnect system components. Make connections to supply and load circuits according to manufacturer's wiring diagrams unless otherwise indicated.

3.3 GROUNDING

A. Separately Derived Systems: If not part of a listed power supply for a data-processing room, comply with NFPA 70 requirements for connecting to grounding electrodes and for bonding to metallic piping near isolation transformer.

3.4 BATTERY EQUALIZATION

A. Equalize charging of battery cells according to manufacturer's written instructions. Record individual-cell voltages.

3.5 FIELD QUALITY CONTROL

A. Perform tests and inspections.

1. Manufacturer's Field Service: Engage a factory-authorized service representative to inspect components, assemblies, and equipment installations, including connections, and to assist in testing.

B. Tests and Inspections:

1. Comply with manufacturer's written instructions.
2. Inspect interiors of enclosures, including the following:
   a. Integrity of mechanical and electrical connections.
   b. Component type and labeling verification.
   c. Ratings of installed components.
3. Inspect batteries and chargers according to requirements in NETA Acceptance Testing Specifications.
4. Test manual and automatic operational features and system protective and alarm functions.
5. Test communication of status and alarms to remote monitoring equipment.

C. The UPS system will be considered defective if it does not pass tests and inspections.

D. Record of Tests and Inspections: Maintain and submit documentation of tests and inspections, including references to manufacturers' written instructions and other test and inspection criteria. Include results of tests, inspections, and retests.

E. Prepare test and inspection reports.

3.6 DEMONSTRATION

A. Train Owner's maintenance personnel to adjust, operate, and maintain the UPS.

END OF SECTION 26 33 53

SECTION 26 36 00 - TRANSFER SWITCHES

PART 1 - GENERAL

1.1 RELATED DOCUMENTS

A. Drawings and general provisions of the Trade Contract, including General and Supplementary Conditions and Division 01 Specification Sections, apply to this Section.

1.2 SUMMARY

A. This Section includes transfer switches rated 600 V and less, including the following:

1. Automatic transfer switches.
2. Bypass/isolation switches.

1.3 ACTION SUBMITTALS

A. Product Data: For each type of product indicated. Include rated capacities, weights, operating characteristics, furnished specialties, and accessories.

B. Shop Drawings: Dimensioned plans, elevations, sections, and details showing minimum clearances, conductor entry provisions, gutter space, installed features and devices, and material lists for each switch specified.

1. Single-Line Diagram: Show connections between transfer switch, bypass/isolation switch, power sources, and load; and show interlocking provisions for each combined transfer switch and bypass/isolation switch.

1.4 INFORMATIONAL SUBMITTALS

A. Qualification Data: For manufacturer.

B. Field quality-control test reports.

1.5 CLOSEOUT SUBMITTALS

A. Operation and Maintenance Data: For each type of product to include in emergency, operation, and maintenance manuals. In addition to items specified in Division 01 Section "Operation and Maintenance Data," include the following:

1. Features and operating sequences, both automatic and manual.
2. List of all factory settings of relays; provide relay-setting and calibration instructions, including software, where applicable.

1.6 QUALITY ASSURANCE

A. Manufacturer Qualifications: Maintain a service center capable of providing training, parts, and emergency maintenance repairs within a response period of less than eight hours from time of notification.

B. Source Limitations: Obtain automatic transfer switches and bypass/isolation switches through one source from a single manufacturer.

C. Electrical Components, Devices, and Accessories: Listed and labeled as defined in NFPA 70, Article 100, by a testing agency acceptable to authorities having jurisdiction, and marked for intended use.

D. Comply with NEMA ICS 1.

E. Comply with NFPA 70.

F. Comply with NFPA 110.

G. Comply with UL 1008 unless requirements of these Specifications are stricter.

1.7 COORDINATION

A. Coordinate size and location of concrete bases. Cast anchor-bolt inserts into bases. Concrete, reinforcement, and formwork requirements are specified in Division 03.

PART 2 - PRODUCTS

2.1 MANUFACTURERS

A. Basis-of-Design Product: Subject to compliance with requirements, provide Emerson; ASCO Power Technologies, LP, or comparable product by one of the following:

1. Caterpillar; Engine Div.
2. GE Zenith Controls.
3. Kohler Power Systems; Generator Division.
4. Spectrum Detroit Diesel.

2.2 GENERAL TRANSFER-SWITCH PRODUCT REQUIREMENTS

A. Indicated Current Ratings: Apply as defined in UL 1008 for continuous loading and total system transfer, including tungsten filament lamp loads not exceeding 30 percent of switch ampere rating, unless otherwise indicated.

B. Tested Fault-Current Closing and Withstand Ratings: Adequate for duty imposed by protective devices at installation locations in Project under the fault conditions indicated, based on testing according to UL 1008.

1. Where transfer switch includes internal fault-current protection, rating of switch and trip unit combination shall exceed indicated fault-current value at installation location.

C. Solid-State Controls: Repetitive accuracy of all settings shall be plus or minus 2 percent or better over an operating temperature range of minus 20 to plus 70 deg C.

D. Resistance to Damage by Voltage Transients: Components shall meet or exceed voltage-surge withstand capability requirements when tested according to IEEE C62.41. Components shall meet or exceed voltage-impulse withstand test of NEMA ICS 1.

E. Electrical Operation: Accomplish by a nonfused, momentarily energized solenoid or electric-motor-operated mechanism, mechanically and electrically interlocked in both directions.

F. Switch Characteristics: Designed for continuous-duty repetitive transfer of full-rated current between active power sources.

1. Limitation: Switches using molded-case switches or circuit breakers or insulated-case circuit-breaker components are not acceptable.
2. Switch Action: Double throw; mechanically held in both directions.
3. Contacts: Silver composition or silver alloy for load-current switching. Conventional automatic transfer-switch units, rated 225 A and higher, shall have separate arcing contacts.

G. Neutral Switching. Where four-pole switches are indicated, provide overlapping neutral contacts.

H. Neutral Terminal: Solid and fully rated, unless otherwise indicated.

I. Oversize Neutral: Ampacity and switch rating of neutral path through units indicated for oversize neutral shall be double the nominal rating of circuit in which switch is installed.

J. Heater: Equip switches exposed to outdoor temperatures and humidity, and other units indicated, with an internal heater. Provide thermostat within enclosure to control heater.

K. Annunciation, Control, and Programming Interface Components: Devices at transfer switches for communicating with remote programming devices, annunciators, or annunciator and control panels shall have communication capability matched with remote device.

L. Factory Wiring: Train and bundle factory wiring and label, consistent with Shop Drawings, either by color-code or by numbered or lettered wire and cable tape markers at terminations. Color-coding and wire and cable tape markers are specified in Division 26 Section "Identification for Electrical Systems."

1. Designated Terminals: Pressure type, suitable for types and sizes of field wiring indicated.
2. Power-Terminal Arrangement and Field-Wiring Space: Suitable for top, side, or bottom entrance of feeder conductors as indicated.
3. Control Wiring: Equipped with lugs suitable for connection to terminal strips.

M. Enclosures: General-purpose NEMA 250, Type **1**, complying with NEMA ICS 6 and UL 508, unless otherwise indicated.

2.3 AUTOMATIC TRANSFER SWITCHES

A. Comply with Level 1 equipment according to NFPA 110.

B. Switching Arrangement: Double-throw type, incapable of pauses or intermediate position stops during normal functioning, unless otherwise indicated.

C. Manual Switch Operation: Under load, with door closed and with either or both sources energized. Transfer time is same as for electrical operation. Control circuit automatically disconnects from electrical operator during manual operation.

D. Manual Switch Operation: Unloaded. Control circuit automatically disconnects from electrical operator during manual operation.

E. Signal-Before-Transfer Contacts: A set of normally open/normally closed dry contacts operates in advance of retransfer to normal source. Interval is adjustable from 1 to 30 seconds.

F. Digital Communication Interface: Matched to capability of remote annunciator or annunciator and control panel.

G. In-Phase Monitor: Factory-wired, internal relay controls transfer so it occurs only when the two sources are synchronized in phase. Relay compares phase relationship and frequency difference between normal and emergency sources and initiates transfer when both sources are within 15 electrical degrees, and only if transfer can be completed within 60 electrical degrees. Transfer is initiated only if both sources are within 2 Hz of nominal frequency and 70 percent or more of nominal voltage.

H. Motor Disconnect and Timing Relay: Controls designate starters so they disconnect motors before transfer and reconnect them selectively at an adjustable time interval after transfer. Control connection to motor starters is through wiring external to automatic transfer switch. Time delay for reconnecting individual motor loads is adjustable between 1 and 60 seconds, and settings are as indicated. Relay contacts handling motor-control circuit inrush and seal currents are rated for actual currents to be encountered.

I. Programmed Neutral Switch Position: Switch operator has a programmed neutral position arranged to provide a midpoint between the two working switch positions, with an intentional, time-controlled pause at midpoint during transfer. Pause is adjustable from 0.5 to 30 seconds minimum and factory set for 0.5 second, unless otherwise indicated. Time delay occurs for both transfer directions. Pause is disabled unless both sources are live.

J. Automatic Transfer-Switch Features:

1. Undervoltage Sensing for Each Phase of Normal Source: Sense low phase-to-ground voltage on each phase. Pickup voltage shall be adjustable from 85 to 100 percent of nominal, and dropout voltage is adjustable from 75 to 98 percent of pickup value. Factory set for pickup at 90 percent and dropout at 85 percent.
2. Adjustable Time Delay: For override of normal-source voltage sensing to delay transfer and engine start signals. Adjustable from zero to six seconds, and factory set for one second.
3. Voltage/Frequency Lockout Relay: Prevent premature transfer to generator. Pickup voltage shall be adjustable from 85 to 100 percent of nominal. Factory set for pickup at 90 percent. Pickup frequency shall be adjustable from 90 to 100 percent of nominal. Factory set for pickup at 95 percent.
4. Time Delay for Retransfer to Normal Source: Adjustable from 0 to 30 minutes, and factory set for 10 minutes to automatically defeat delay on loss of voltage or sustained undervoltage of emergency source, provided normal supply has been restored.
5. Test Switch: Simulate normal-source failure.
6. Switch-Position Pilot Lights: Indicate source to which load is connected.
7. Source-Available Indicating Lights: Supervise sources via transfer-switch normal- and emergency-source sensing circuits.

    a. Normal Power Supervision: Green light with nameplate engraved "Normal Source Available."
    b. Emergency Power Supervision: Red light with nameplate engraved "Emergency Source Available."

8. Unassigned Auxiliary Contacts: Two normally open, single-pole, double-throw contacts for each switch position, rated 10 A at 240-V ac.
9. Transfer Override Switch: Overrides automatic retransfer control so automatic transfer switch will remain connected to emergency power source regardless of condition of normal source. Pilot light indicates override status.
10. Engine Starting Contacts: One isolated and normally closed, and one isolated and normally open; rated 10 A at 32-V dc minimum.
11. Engine Shutdown Contacts: Instantaneous; shall initiate shutdown sequence at remote engine-generator controls after retransfer of load to normal source.
12. Engine Shutdown Contacts: Time delay adjustable from zero to five minutes, and factory set for five minutes. Contacts shall initiate shutdown at remote engine-generator controls after retransfer of load to normal source.
13. Engine-Generator Exerciser: Solid-state, programmable-time switch starts engine generator and transfers load to it from normal source for a preset time, then retransfers and shuts down engine after a preset cool-down period. Initiates exercise cycle at preset intervals adjustable from 7 to 30 days. Running periods are adjustable from 10 to 30 minutes. Factory settings are for 7-day exercise cycle, 20-minute running period, and 5-minute cool-down period. Exerciser features include the following:

    a. Exerciser Transfer Selector Switch: Permits selection of exercise with and without load transfer.
    b. Push-button programming control with digital display of settings.
    c. Integral battery operation of time switch when normal control power is not available.

2.4 BYPASS/ISOLATION SWITCHES

A. Comply with requirements for Level 1 equipment according to NFPA 110.

B. Description: Manual type, arranged to select and connect either source of power directly to load, isolating transfer switch from load and from both power sources. Include the following features for each combined automatic transfer switch and bypass/isolation switch:

1. Means to lock bypass/isolation switch in the position that isolates transfer switch with an arrangement that permits complete electrical testing of transfer switch while isolated. While isolated, interlocks prevent transfer-switch operation, except for testing or maintenance.
2. Drawout Arrangement for Transfer Switch: Provide physical separation from live parts and accessibility for testing and maintenance operations.
3. Bypass/Isolation Switch Current, Voltage, Closing, and Short-Circuit Withstand Ratings: Equal to or greater than those of associated automatic transfer switch, and with same phase arrangement and number of poles.
4. Contact temperatures of bypass/isolation switches shall not exceed those of automatic transfer-switch contacts when they are carrying rated load.
5. Operability: Constructed so load bypass and transfer-switch isolation can be performed by 1 person in no more than 2 operations in 15 seconds or less.
6. Legend: Manufacturer's standard legend for control labels and instruction signs shall describe operating instructions.
7. Maintainability: Fabricate to allow convenient removal of major components from front without removing other parts or main power conductors.

C. Interconnection of Bypass/Isolation Switches with Automatic Transfer Switches: Factory-installed copper bus bars; plated at connection points and braced for the indicated available short-circuit current.

2.5 SOURCE QUALITY CONTROL

A. Factory test and inspect components, assembled switches, and associated equipment. Ensure proper operation. Check transfer time and voltage, frequency, and time-delay settings for compliance with specified requirements. Perform dielectric strength test complying with NEMA ICS 1.

PART 3 - EXECUTION

3.1 INSTALLATION

A. Design each fastener and support to carry load indicated by seismic requirements and according to seismic-restraint details.

B. Floor-Mounting Switch: Anchor to floor by bolting.

1. Concrete Bases: 4 inches high, reinforced, with chamfered edges. Extend base no more than 4 inches in all directions beyond the maximum dimensions of switch, unless

otherwise indicated or unless required for seismic support. Construct concrete bases according to Division 26 Section "Hangers and Supports for Electrical Systems."

C. Annunciator and Control Panel Mounting: Flush in wall, unless otherwise indicated.

D. Identify components according to Division 26 Section "Identification for Electrical Systems."

E. Set field-adjustable intervals and delays, relays, and engine exerciser clock.

3.2 CONNECTIONS

A. Wiring to Remote Components: Match type and number of cables and conductors to control and communication requirements of transfer switches as recommended by manufacturer. Increase raceway sizes at no additional cost to Owner if necessary to accommodate required wiring.

B. Ground equipment according to Division 26 Section "Grounding and Bonding for Electrical Systems."

C. Connect wiring according to Division 26 Section "Low-Voltage Electrical Power Conductors and Cables."

3.3 FIELD QUALITY CONTROL

A. Perform tests and inspections and prepare test reports.

1. Manufacturer's Field Service: Engage a factory-authorized service representative to inspect components, assemblies, and equipment installation, including connections, and to assist in testing.
2. After installing equipment and after electrical circuitry has been energized, test for compliance with requirements.
3. Perform each visual and mechanical inspection and electrical test stated in NETA Acceptance Testing Specification. Certify compliance with test parameters.
4. Measure insulation resistance phase-to-phase and phase-to-ground with insulation-resistance tester. Include external annunciation and control circuits. Use test voltages and procedure recommended by manufacturer. Comply with manufacturer's specified minimum resistance.

    a. Check for electrical continuity of circuits and for short circuits.
    b. Inspect for physical damage, proper installation and connection, and integrity of barriers, covers, and safety features.
    c. Verify that manual transfer warnings are properly placed.
    d. Perform manual transfer operation.

5. After energizing circuits, demonstrate interlocking sequence and operational function for each switch at least three times.

    a. Simulate power failures of normal source to automatic transfer switches and of emergency source with normal source available.

b. Simulate loss of phase-to-ground voltage for each phase of normal source.
c. Verify time-delay settings.
d. Verify pickup and dropout voltages by data readout or inspection of control settings.
e. Test bypass/isolation unit functional modes and related automatic transfer-switch operations.
f. Perform contact-resistance test across main contacts and correct values exceeding 500 microhms and values for 1 pole deviating by more than 50 percent from other poles.
g. Verify proper sequence and correct timing of automatic engine starting, transfer time delay, retransfer time delay on restoration of normal power, and engine cool-down and shutdown.

6. Ground-Fault Tests: Coordinate with testing of ground-fault protective devices for power delivery from both sources.

a. Verify grounding connections and locations and ratings of sensors.

B. Engage a factory-authorized service representative to train Owner's maintenance personnel to adjust, operate, and maintain transfer switches and related equipment.

C. Coordinate this training with that for generator equipment.

END OF SECTION 26 36 00

SECTION 26 41 13 - LIGHTNING PROTECTION FOR STRUCTURES

PART 1 - GENERAL

1.1 RELATED DOCUMENTS

A. Drawings and general provisions of the Trade Contract, including General and Supplementary Conditions and Division 01 Specification Sections, apply to this Section.

1.2 SUMMARY

A. Section includes lightning protection for structures.

1.3 ACTION SUBMITTALS

A. Product Data: For each type of product indicated.

B. Shop Drawings: For air terminals and mounting accessories.

1. Layout of the lightning protection system, along with details of the components to be used in the installation.

2. Include indications for use of raceway, data on how concealment requirements will be met, and calculations required by NFPA 780 for bonding of grounded and isolated metal bodies.

1.4 INFORMATIONAL SUBMITTALS

A. Qualification Data: For qualified Installer and manufacturer. Include data on listing or certification by UL.

B. Certification, signed by Trade Contractor, that roof adhesive is approved by manufacturer of roofing material.

C. Field quality-control reports.

D. Comply with recommendations in NFPA 780, Annex D, "Inspection and Maintenance of Lightning Protection Systems," for maintenance of the lightning protection system.

E. Other Informational Submittals: Plans showing dimensioned as-built locations of grounding features, including the following:

1. Ground rods.

2. Ground loop conductor.

1.5 QUALITY ASSURANCE

A. Installer Qualifications: Certified by UL, trained and approved for installation of units required for this Project.

B. System Certificate:

1. UL Master Label.

C. Electrical Components, Devices, and Accessories: Listed and labeled as defined in NFPA 780, "Definitions" Article.

1.6 COORDINATION

A. Coordinate installation of lightning protection with installation of other building systems and components, including electrical wiring, supporting structures and building materials, metal bodies requiring bonding to lightning protection components, and building finishes.

B. Coordinate installation of air terminals attached to roof systems with roofing manufacturer and Installer.

C. Flashings of through-roof assemblies shall comply with roofing manufacturers' specifications.

PART 2 - PRODUCTS

2.1 LIGHTNING PROTECTION SYSTEM COMPONENTS

A. Comply with UL 96 and NFPA 780.

B. Roof-Mounted Air Terminals: NFPA 780, Class I copper, except aluminum is acceptable where attached to aluminum roof element

1. Manufacturers: Subject to compliance with requirements, available manufacturers offering products that may be incorporated into the Work include, but are not limited to, the following:

a. East Coast Lightning Equipment Inc.
b. ERICO International Corporation.
c. Heary Bros. Lightning Protection Co. Inc.
d. Independent Protection Co.
e. Robbins Lightning, Inc.
f. Thompson Lightning Protection, Inc.

2. Air Terminals More than 24 Inches (600 mm) Long: With brace attached to the terminal at not less than half the height of the terminal.

3. Single-Membrane, Roof-Mounted Air Terminals: Designed specifically for single-membrane roof system materials. Comply with requirements in Division 07 roofing Sections.

C. Main and Bonding Conductors: Copper.

D. Ground Loop Conductor: The same size and type as the main conductor except tinned.

E. Ground Rods: Copper-clad steel, sectional type; 3/4 inch (19 mm) in diameter by 10 feet (3 m) long.

PART 3 - EXECUTION

3.1 INSTALLATION

A. Install lightning protection components and systems according to UL 96A and NFPA 780.

B. Install conductors with direct paths from air terminals to ground connections. Avoid sharp bends.

C. Conceal the following conductors:

1. System conductors.

2. Down conductors.

3. Interior conductors.

4. Conductors within normal view of exterior locations at grade within 200 feet (60 m) of building.

D. Cable Connections: Use crimped or bolted connections for all conductor splices and connections between conductors and other components. Use exothermic-welded connections in underground portions of the system.

E. Air Terminals on Single-Ply Membrane Roofing: Comply with roofing membrane and adhesive manufacturer's written instructions.

F. Bond extremities of vertical metal bodies exceeding 60 feet (18 m) in length to lightning protection components.

G. Ground Loop: Install ground-level, potential equalization conductor and extend around the perimeter of structure.

1. Bury ground ring not less than 24 inches (600 mm) from building foundation.

2. Bond ground terminals to the ground loop.

3. Bond grounded building systems to the ground loop conductor within 12 feet (3.6 m) of grade level.

H. Bond lightning protection components with intermediate-level interconnection loop conductors to grounded metal bodies of building at 60-foot (18-m) intervals.

3.2 CORROSION PROTECTION

A. Do not combine materials that can form an electrolytic couple that will accelerate corrosion in the presence of moisture unless moisture is permanently excluded from junction of such materials.

B. Use conductors with protective coatings where conditions cause deterioration or corrosion of conductors.

3.3 FIELD QUALITY CONTROL

A. Notify CTDOT PM at least 48 hours in advance of inspection before concealing lightning protection components.

B. UL Inspection: Meet requirements to obtain a UL Master Label for system.

END OF SECTION 26 41 13

SECTION 26 51 00 - INTERIOR LIGHTING

PART 1 - GENERAL

1.1 RELATED DOCUMENTS

A. Drawings and general provisions of the Trade Contract, including General and Supplementary Conditions and Division 01 Specification Sections, apply to this Section.

1.2 SUMMARY

A. Section Includes:

1. Interior lighting fixtures, lamps, and ballasts.

2. Emergency lighting units.

3. Exit signs.

4. Lighting fixture supports.

B. Related Sections:

1. Division 26 Section "Lighting Control Devices" for automatic control of lighting, including time switches, photoelectric relays, occupancy sensors, and multipole lighting relays and contactors.

2. Division 26 Section "Wiring Devices" for manual switches and wall-box dimmers.

1.3 DEFINITIONS

A. BF: Ballast factor.

B. CCT: Correlated color temperature.

C. CRI: Color-rendering index.

D. HID: High-intensity discharge.

E. LER: Luminaire efficacy rating.

F. Lumen: Measured output of lamp and luminaire, or both.

G. Luminaire: Complete lighting fixture, including ballast housing if provided.

1.4 ACTION SUBMITTALS

A. Product Data: For each type of lighting fixture, arranged in order of fixture designation. Include data on features, accessories, finishes, and the following:

1. Physical description of lighting fixture including dimensions.

2. Emergency lighting units including battery and charger.

3. Ballast, including BF.

4. Energy-efficiency data.

5. Air and Thermal Performance Data: For air-handling lighting fixtures. Furnish data required in "Action Submittals" Article in Division 23 Section "Diffusers, Registers, and Grilles."

6. Life, output (lumens, CCT, and CRI), and energy-efficiency data for lamps.

7. Photometric data and adjustment factors based on laboratory tests, complying with IESNA Lighting Measurements Testing & Calculation Guides, of each lighting fixture type. The adjustment factors shall be for lamps, ballasts, and accessories identical to those indicated for the lighting fixture as applied in this Project.

   a. Manufacturer Certified Data: Photometric data shall be certified by a manufacturer's laboratory with a current accreditation under the National Voluntary Laboratory Accreditation Program for Energy Efficient Lighting Products.

B. Shop Drawings: For nonstandard or custom lighting fixtures. Include plans, elevations, sections, details, and attachments to other work.

1. Detail equipment assemblies and indicate dimensions, weights, loads, required clearances, method of field assembly, components, and location and size of each field connection.
2. Wiring Diagrams: For power, signal, and control wiring.

C. Installation instructions.

D. Qualification Data: For qualified agencies providing photometric data for lighting fixtures.

E. Product Certificates: For each type of ballast for bi-level and dimmer-controlled fixtures, from manufacturer.

F. Field quality-control reports.

G. Warranty: Sample of special warranty.

1.5 CLOSEOUT SUBMITTALS

A. Operation and Maintenance Data: For lighting equipment and fixtures to include in emergency, operation, and maintenance manuals.

1. Provide a list of all lamp types used on Project; use ANSI and manufacturers' codes.

1.6 QUALITY ASSURANCE

A. Luminaire Photometric Data Testing Laboratory Qualifications: Provided by an independent agency, with the experience and capability to conduct the testing indicated, that is an NRTL as defined by OSHA in 29 CFR 1910, complying with the IESNA Lighting Measurements Testing & Calculation Guides.

B. Electrical Components, Devices, and Accessories: Listed and labeled as defined in NFPA 70, by a qualified testing agency, and marked for intended location and application.

C. Comply with NFPA 70.

1.7 COORDINATION

A. Coordinate layout and installation of lighting fixtures and suspension system with other construction that penetrates ceilings or is supported by them, including HVAC equipment, fire-suppression system, and partition assemblies.

1.8 WARRANTY

A. Special Warranty for Emergency Lighting Batteries: Manufacturer's standard form in which manufacturer of battery-powered emergency lighting unit agrees to repair or replace components of rechargeable batteries that fail in materials or workmanship within specified warranty period.

1. Warranty Period for Emergency Fluorescent Ballast and Self-Powered Exit Sign Batteries: Seven years from date of Substantial Completion. Full warranty shall apply for first year, and prorated warranty for the remaining six years.

PART 2 - PRODUCTS

2.1 MANUFACTURERS

A. Products: Subject to compliance with requirements, provide one of the products indicated on Drawings.

2.2 GENERAL REQUIREMENTS FOR LIGHTING FIXTURES AND COMPONENTS

A. Recessed Fixtures: Comply with NEMA LE 4 for ceiling compatibility for recessed fixtures.

B. Fluorescent Fixtures: Comply with UL 1598. Where LER is specified, test according to NEMA LE 5 and NEMA LE 5A as applicable.

C. HID Fixtures: Comply with UL 1598. Where LER is specified, test according to NEMA LE 5B.

D. Metal Parts: Free of burrs and sharp corners and edges.

E. Sheet Metal Components: Steel unless otherwise indicated. Form and support to prevent warping and sagging.

F. Doors, Frames, and Other Internal Access: Smooth operating, free of light leakage under operating conditions, and designed to permit relamping without use of tools. Designed to prevent doors, frames, lenses, diffusers, and other components from falling accidentally during relamping and when secured in operating position.

G. Diffusers:

1. Acrylic Lighting Diffusers: 100 percent virgin acrylic plastic. High resistance to yellowing and other changes due to aging, exposure to heat, and UV radiation.

a. Lens Thickness: At least 0.125 inch (3.175 mm) minimum unless otherwise indicated.
b. UV stabilized.

H. Factory-Applied Labels: Comply with UL 1598. Include recommended lamps and ballasts. Labels shall be located where they will be readily visible to service personnel, but not seen from normal viewing angles when lamps are in place.

1. Label shall include the following lamp and ballast characteristics:

a. "USE ONLY" and include specific lamp type.
b. Lamp diameter code (T-4, T-5, T-8, T-12, etc.), tube configuration (twin, quad, triple, etc.), base type, and nominal wattage for fluorescent and compact fluorescent luminaires.
c. Lamp type, wattage, bulb type (ED17, BD56, etc.) and coating (clear or coated) for HID luminaires.
d. Start type (preheat, rapid start, instant start, etc.) for fluorescent and compact fluorescent luminaires.
e. ANSI ballast type (M98, M57, etc.) for HID luminaires.
f. CCT and CRI for all luminaires.

I. Air-Handling Fluorescent Fixtures: For use with plenum ceiling for air return and heat extraction.

1. Dampers: Operable from outside fixture for control of return-air volume.

2. Static Fixture: Air-supply slots are blanked off, and fixture appearance matches active units.

2.3 BALLASTS FOR LINEAR FLUORESCENT LAMPS

A. General Requirements for Electronic Ballasts:

1. Comply with UL 935 and with ANSI C82.11.

2. Designed for type and quantity of lamps served.

3. Ballasts shall be designed for full light output unless another BF, dimmer, or bi-level control is indicated.

4. Sound Rating: Class A.

5. Total Harmonic Distortion Rating: Less than 10 percent.

6. Transient Voltage Protection: IEEE C62.41.1 and IEEE C62.41.2, Category A or better.

7. Operating Frequency: 42 kHz or higher.

8. Lamp Current Crest Factor: 1.7 or less.

9. BF: 0.88 or higher.

10. Power Factor: 0.98 or higher.

11. Parallel Lamp Circuits: Multiple lamp ballasts shall comply with ANSI C82.11 and shall be connected to maintain full light output on surviving lamps if one or more lamps fail.

B. Luminaires controlled by occupancy sensors shall have programmed-start ballasts.

C. Electronic Programmed-Start Ballasts for T5, T8 and T5HO Lamps: Comply with ANSI C82.11 and the following:

1. Lamp end-of-life detection and shutdown circuit for T5 diameter lamps.

2. Automatic lamp starting after lamp replacement.

D. Single Ballasts for Multiple Lighting Fixtures: Factory wired with ballast arrangements and bundled extension wiring to suit final installation conditions without modification or rewiring in the field.

E. Ballasts for Low-Temperature Environments:

1. Temperatures 0 Deg F (Minus 17 Deg C) and Higher: Electronic type rated for 0 deg F (minus 17 deg C) starting and operating temperature with indicated lamp types.

F. Ballasts for Dimmer-Controlled Lighting Fixtures: Electronic type.

1. Dimming Range: 100 to 5 percent of rated lamp lumens.

2. Ballast Input Watts: Can be reduced to 20 percent of normal.

3. Compatibility: Certified by manufacturer for use with specific dimming control system and lamp type indicated.

4. Control: Coordinate wiring from ballast to control device to ensure that the ballast, controller, and connecting wiring are compatible.

2.4 BALLASTS FOR COMPACT FLUORESCENT LAMPS

A. Description: Electronic-programmed rapid-start type, complying with UL 935 and with ANSI C 82.11, designed for type and quantity of lamps indicated. Ballast shall be designed for full light output unless dimmer or bi-level control is indicated:

1. Lamp end-of-life detection and shutdown circuit.

2. Automatic lamp starting after lamp replacement.

3. Sound Rating: Class A.

4. Total Harmonic Distortion Rating: Less than 20 percent.

5. Transient Voltage Protection: IEEE C62.41.1 and IEEE C62.41.2, Category A or better.

6. Operating Frequency: 20 kHz or higher.

7. Lamp Current Crest Factor: 1.7 or less.

8. BF: 0.95 or higher unless otherwise indicated.

9. Power Factor: 0.98 or higher.

10. Interference: Comply with 47 CFR 18, Ch. 1, Subpart C, for limitations on electromagnetic and radio-frequency interference for nonconsumer equipment.

2.5 EMERGENCY FLUORESCENT POWER UNIT

A. Internal Type: Self-contained, modular, battery-inverter unit, factory mounted within lighting fixture body and compatible with ballast. Comply with UL 924.

1. Emergency Connection: Operate two fluorescent lamp(s) continuously at an output of 1300 lumens each. Connect unswitched circuit to battery-inverter unit and switched circuit to fixture ballast.

2. Test Push Button and Indicator Light: Visible and accessible without opening fixture or entering ceiling space.

a. Push Button: Push-to-test type, in unit housing, simulates loss of normal power and demonstrates unit operability.
b. Indicator Light: LED indicates normal power on. Normal glow indicates trickle charge; bright glow indicates charging at end of discharge cycle.

3. Battery: Sealed, maintenance-free, nickel-cadmium type.

4. Charger: Fully automatic, solid-state, constant-current type with sealed power transfer relay.

2.6 POWER SUPPLY DRIVER FOR LED FIXTURES

A. Driver: 120 – 277 volt, UL Listed, CSA Certified, Sound Rated A+. Driver shall be > 80% efficient at full load across all input voltages. Input wires shall be 18AWG solid copper minimum.

1. Driver shall be suitable for full-range dimming. The luminaire shall be capable of continuous dimming without perceivable flicker over a range of 100% to 5% of rated lumen output with a smooth shut off function. Dimming shall be controlled by a 0-10V signal.

2. Driver shall be UL listed.

3. Maximum stand-by power shall be 1 Watt.

4. Driver disconnect shall be provided where required to comply with codes.

5. The electronics/power supply enclosure shall be internal to the luminaire and be accessible per UL requirements.

6. The surge protection which resides within the driver shall protect the luminaire from damage and failure for transient voltages and currents as defined in ANSI/IEEE C64.41 2002 for Location Category A, where failure does not mean a momentary loss of light during the transient event.

B. Power Factor: The luminaire shall have a power factor of 90% or greater at all standard operating voltages and full luminaire output

2.7 EXIT SIGNS

A. General Requirements for Exit Signs: Comply with UL 924; for sign colors, visibility, luminance, and lettering size, comply with authorities having jurisdiction.

B. Internally Lighted Signs:

1. Lamps for AC Operation: LEDs, 50,000 hours minimum rated lamp life.

2. Self-Powered Exit Signs (Battery Type): Integral automatic charger in a self-contained power pack.

a. Battery: Sealed, maintenance-free, nickel-cadmium type.
b. Charger: Fully automatic, solid-state type with sealed transfer relay.
c. Operation: Relay automatically energizes lamp from battery when circuit voltage drops to 80 percent of nominal voltage or below. When normal voltage is restored, relay disconnects lamps from battery, and battery is automatically recharged and floated on charger.

d. Test Push Button: Push-to-test type, in unit housing, simulates loss of normal power and demonstrates unit operability.
e. LED Indicator Light: Indicates normal power on. Normal glow indicates trickle charge; bright glow indicates charging at end of discharge cycle.
f. Remote Test: Switch in hand-held remote device aimed in direction of tested unit initiates coded infrared signal. Signal reception by factory-installed infrared receiver in tested unit triggers simulation of loss of its normal power supply, providing visual confirmation of either proper or failed emergency response.
g. Integral Self-Test: Factory-installed electronic device automatically initiates code-required test of unit emergency operation at required intervals. Test failure is annunciated by an integral audible alarm and a flashing red LED.

2.8 FLUORESCENT LAMPS

A. T8 rapid-start lamps, CRI 80 (minimum), color temperature 3500 K, and average rated life 20,000 hours unless otherwise indicated.

B. T5 rapid-start lamps, CRI 80 (minimum), color temperature 3500 K, and average rated life of 20,000 hours unless otherwise indicated.

C. T5HO rapid-start, high-output lamps, CRI 80 (minimum), color temperature 3500 K, and average rated life of 20,000 hours unless otherwise indicated.

D. Compact Fluorescent Lamps: 4-Pin, CRI 80 (minimum), color temperature 3500 K, average rated life of 10,000 hours at three hours operation per start, and suitable for use with dimming ballasts unless otherwise indicated.

2.9 LED LAMPS

A. General Requirements: Lumen output shall not decrease by more than 20% over the minimum operational life of 50,000 hours. Individual LEDs shall be connected such that a catastrophic loss or the failure of one LED will not result in the loss of the entire luminaire. LED Boards shall be suitable for field maintenance or service from below the ceiling with plug-in connectors. LED boards shall be upgradable.

B. Light Color and Quality: Correlated Color temperature (CCT) range as per specification, between 3500K, 4100K and 5000K shall be correlated to chromaticity as defined by the absolute (X,Y) coordinates on the 2- D CIE chromaticity chart. The color rendition index (CRI) shall be 82 or greater. Color shift over 6,000 hours shall be <0.007 change in u’ v’ as demonstrated in IES LM80 report.

2.10 LIGHTING FIXTURE SUPPORT COMPONENTS

A. Comply with Division 26 Section "Hangers and Supports for Electrical Systems" for channel- and angle-iron supports and nonmetallic channel and angle supports.

B. Single-Stem Hangers: 1/2-inch (13-mm) steel tubing with swivel ball fittings and ceiling canopy. Finish same as fixture.

C. Twin-Stem Hangers: Two, 1/2-inch (13-mm) steel tubes with single canopy designed to mount a single fixture. Finish same as fixture.

D. Wires: ASTM A 641/A 641M, Class 3, soft temper, zinc-coated steel, 12 gage (2.68 mm).

E. Rod Hangers: 3/16-inch (5-mm) minimum diameter, cadmium-plated, threaded steel rod.

PART 3 - EXECUTION

3.1 INSTALLATION

A. Lighting fixtures:

1. Set level, plumb, and square with ceilings and walls unless otherwise indicated.

2. Install lamps in each luminaire.

B. Temporary Lighting: If it is necessary, and approved by CTDOT PM, to use permanent luminaires for temporary lighting, install and energize the minimum number of luminaires necessary. When construction is sufficiently complete, remove the temporary luminaires, disassemble, clean thoroughly, install new lamps, and reinstall.

C. Remote Mounting of Ballasts: Distance between the ballast and fixture shall not exceed that recommended by ballast manufacturer. Verify, with ballast manufacturers, maximum distance between ballast and luminaire.

D. Lay-in Ceiling Lighting Fixtures Supports: Do not use grid as a structural support element.

1. Install ceiling support system rods or wires, independent of the ceiling suspension devices, for each fixture. Locate not more than 6 inches (150 mm) from lighting fixture corners.

2. Fixtures of Sizes Less Than Ceiling Grid: Install as indicated on reflected ceiling plans or center in acoustical panel, and support fixtures independently with at least two 3/4-inch (20-mm) metal channels spanning and secured to ceiling tees.

3. Install at least one independent support rod or wire from structure to a tab on lighting fixture. Wire or rod shall have breaking strength of the weight of fixture at a safety factor of 3.

E. Suspended Lighting Fixture Support:

1. Pendants and Rods: Where longer than 48 inches (1200 mm), brace to limit swinging.

2. Stem-Mounted, Single-Unit Fixtures: Suspend with twin-stem hangers.

3. Continuous Rows: Use tubing or stem for wiring at one point and tubing or rod for suspension for each unit length of fixture chassis, including one at each end.

4. Do not use grid as support for pendant luminaires. Connect support wires or rods to building structure.

F. Connect wiring according to Division 26 Section "Low-Voltage Electrical Power Conductors and Cables."

3.2 IDENTIFICATION

A. Install labels with panel and circuit numbers on concealed junction and outlet boxes. Comply with requirements for identification specified in Division 26 Section "Identification for Electrical Systems."

3.3 FIELD QUALITY CONTROL

A. Test for Emergency Lighting: Interrupt power supply to demonstrate proper operation. Verify transfer from normal power to battery and retransfer to normal.

3.4 STARTUP SERVICE

A. Burn-in all lamps that require specific aging period to operate properly, prior to occupancy by Owner. Burn-in fluorescent and compact fluorescent lamps intended to be dimmed, for at least 100 hours at full voltage.

END OF SECTION 26 51 00

SECTION 26 56 26 – SITE LIGHTING

PART 1 - GENERAL

1.1 RELATED REQUIREMENTS

A. Work included in this section may require coordination with MNRR regarding flagmen, or other issues related to work around railroad facilities. The Trade Contractor shall pay special attention to Division 01 specifications and other MNRR Specifications contained in the Trade Contract.

B. Section 26 05 26 Grounding and Bonding for Electrical Systems

C. Section 26 05 33 Raceway and Boxes for Electrical Systems

1.2 SUMMARY

A. Section includes:

1. Exterior luminaries with lamps and ballasts;

2. Poles and accessories;

3. Luminaire lowering devices.

1.3 DEFINITIONS:

A. CCT: Correlated color temperature

B. CRI: Color-rendering index

C. LED: Light-emitting diode

D. LER: Luminaire efficacy rating

E. Luminaire: Complete lighting fixture, including ballast housing if provided.

F. Pole: Luminaire support structure

G. Standard: Same definition as “pole” above

1.4 STRUCTURAL ANALYSIS CRITERIA FOR POLE SELECTION:

A. Dead Load: Weight of luminaire and its horizontal and vertical supports and supporting structure, applied as stated in AASHTO LTS-4-M.

B. Ice Load: Load of 3 lbf/sq. ft applied as stated in AASHTO LTS-4-M

C. Wind Load: Pressure of wind on pole and luminaire and banners and banner arms, calculated and applied as stated in AASHTO LTS-4-M.

1. Basic wind speed for calculating wind load for poles exceeding 49.2 feet in height is 120 mph.

   a. Wind Importance Factor: 1.0.

   b. Minimum Design Life: 50 years.

   c. Velocity Conversion Factors: 1.0.

2. Basic wind speed for calculating wind load for poles 50 feet high or less is 120 mph.

   a. Wind Importance Factor: 1.0

   b. Minimum Design Life: 25 years.

   c. Velocity Conversion Factors: 1.0.

1.5 SUBMITTALS:

A. Submit the following in accordance with Section 01 33 00 – Submittal Procedures and Section 01 33 00.13 – Document Control.

B. Product Data: For each luminaire, pole, and support component, arranged in order of lighting unit designation. Include data on features, accessories, finishes, and the following:

1. Physical description of luminaire, including materials, dimensions, effective projected area, and verification of indicated parameters.

2. Details of attaching luminaires and accessories.

3. Details of installation and construction.

4. Luminaire materials.

5. Photometric data based on laboratory tests of each luminaire type, complete with indicated lamps, ballasts, and accessories.

6. Ballasts, including energy-efficiency data.

7. Lamps, including life, output, CCT, CRI, lumens and energy-efficient data.

8. Materials, dimensions, and finishes of poles.

9. Means of attaching luminaires to supports, and indication that attachment is suitable for components involved.

10. Anchor bolts for poles.

11. Manufactured pole foundations.

C. Shop drawings: Include plans, elevations, sections, details, and attachments to other work.

D. Pole and support component certificates.

E. Maintenance Data: Include operation and maintenance manuals specified in Section 01 78 23 Operation and Maintenance Data.

F. Warranties: Special warranties specified in Section 01 78 30, Warranties and Bonds.

1.6 QUALITY ASSURANCE:

A. Source Limitations: Obtain products from a single manufacturer in accordance with Section 01 45 00 Quality Control.

B. Luminaire photometric data testing laboratory qualifications.

C. Electrical components, devices and accessories.

D. Comply with IEEE C2, “National Electrical Safety Code.”

E. Comply with NFPA 70.

1.7 DELIVERY, STORAGE AND HANDLING:

A. Package aluminum poles for shipping according to ASTM B660.

B. Store poles on decay-resistant skids at least 12 inches above grade and vegetation. Support poles to prevent distortion and arrange to provide free air circulation.

C. Retain factory-applied pole wrappings on metal poles until right before pole installation. For poles with nonmetallic finishes, handle with web fabric straps.

1.8 WARRANTY:

A. Refer to Section 01 77 00, Closeout Procedures for additional information.

B. Special Warranty: Manufacturer’s standard form in which manufacturer agrees to repair or replace products that fail in materials or workmanship; that corrode; or that fade, stain, perforate, erode, or chalk due to effects of weather or solar radiation within specified warranty period. Manufacturer may exclude lightning damage, hail damage, vandalism, abuse, or unauthorized repaired repairs or alterations from special warranty coverage.

1. Warranty period for luminaires: Five years from the date of substantial completion.
2. Warranty period for metal corrosion: Five years from the date of substantial Completion.
3. Warranty period for color retention: Five years from date of substantial completion.
4. Warranty period for poles: repair or replace lighting poles and standards that fail in finish, materials and workmanship within manufacturer’s standard warranty period, but not less than three years from the date of substantial completion.

1.9 SPARE PARTS:

A. Furnish extra materials described below that match products installed and that are packaged with protective covering for storage and identified labels.

1. Lamps: 10 for every 100 of each type and rating installed. Furnish at least one of each type.
2. Glass and plastic lenses, covers and other optical parts: 1 for every 100 of each type and rating installed. Furnish at least one of each type.
3. Ballast: 1 for every 100 of each type and rating installed. Furnish at least one of each type.
4. Globes and guards: 1 for every 20 of each type and rating installed. Furnish at least one of each type.

1.10 COORDINATION

A. Furnish bolt templates and pole mounting accessories to installer of pole foundations.

PART 2 - PRODUCTS

2.1 MANUFACTURERS:

A. Products: Subject to compliance with requirements, available products that may be incorporated into the work include, but are not limited to, products indicated on drawings.

2.2 LUMINARIES

A. Luminaires shall comply with UL 1598 and be listed labeled for installation in wet locations by an NRTL acceptable to authorities having jurisdiction.

1. LER tests HID fixtures: Where LER is specified, test according to NEMA LE 5B.

B. Lateral light distribution patterns: Comply with IESNA RP-8 for parameters of lateral light distribution patterns indicated for luminaires.

C. Metal parts: Free of burrs and sharp corners and edges.

D. Sheet metal components: Corrosion-resistant aluminum unless otherwise indicated. Form and support to prevent warping and sagging.

E. Housings: Rigidly formed, weather-and light –tight enclosures that will not wrap, sag, or deform in use. Provide filter/breather for enclosed luminaires.

F. Doors, frames, and other internal access: smooth operating, free of light leakage under operating conditions, and designed to permit relamping without use of tools. Designed to prevent doors, frames, lenses, diffusers, and other components from falling accidentally during relamping and when secured in operating position. Doors shall be removable for cleaning or replacing lenses. Designed to disconnect ballast when door opens.

G. Exposed hardware material: Stainless steel.

H. Plastic parts: High resistance to yellowing and other changes due to aging, exposure to heat, and UV radiation.

I. Light shields: Metal baffles, factory installed and filed adjustable, arranged to block light distribution to indicated of normal illuminated area or field.

J. Reflecting surfaces shall have minimum reflectance as follows unless otherwise indicated:

1. White surface: 85 percent
2. Specular surfaces:83 percent
3. Diffusing specular surfaces:75 percent

K. Lenses and refractors gaskets: Use heat and aging resistant resilient gaskets to seal and cushion lenses and refractors in luminaire doors.

L. Luminaire finish: manufacturer's standard paint applied to factory-assembled and tested luminaire before shipping. Where indicated, match finish process and color of pole or support materials.

M. Factory-applied finish for steel luminaires: comply with NAAMM's "Metal finishes manual for Architectural and metal products" for recommendations for applying and designating finishes.

N. Factory-applied finish for aluminum luminaires: Comply with NAAMM's "Metal Finishes Manual for Architectural and Metal Products" for recommendations for applying and designating finishes.

O. Factory-applied labels: Comply with UL1598. Include recommended lamps and ballasts. Labels shall be located where they will be readily visible to service personnel, but not seen from normal viewing angles when lamps are in place.

2.3 LED FIXTURES

A. The complete system shall be capable of starting and operating the light engine within the limits specified by the LED manufacturer. The luminaire shall contain completely prewired integral drivers and an optical assembly that shall provide a distribution type, specified according to the drawings.

B. Labeling shall be in accordance with ANSI standards. All units shall be UL Certified.

C. Light Engine: Composed of 4 main components:

1. LED lamp
2. Optical System
3. Heat Sink
4. Driver

D. Electrical components shall be RoHS compliant.

E. Lens: Made of soda lime tempered glass lens, mechanically assembled and sealed onto the lower part of the heat sink.

F. Lamp: (Included), Composed of high performance white LEDs. Color temperature of 3500 Kelvin nominal, 70 CRI. Operating lifespan, 70 000 hours after which the system emits 70% of its original lumen output, all of those parameters are tested for 100% of light engines. Provide metal core board to insure greater heat transfer and longer lifespan of the light engine

G. Optical System: Composed of high performance collimators, optimized with varying acrylic beam angles to achieve desired distribution. System is rated IP66. Performance shall be tested per LM63 and LM79 (IESNA) certifying its photometric performance.

H. Heat Sink: Made of cast aluminum optimizing the LEDs efficiency and life. Product shall not use any cooling device with moving parts (passive cooling device)

I. Driver: High power factor of 90%. Electronic driver, 60 Hz. Auto adjusting to a voltage between 120 and 277 volt AC, Class II, THD of 20% max. Maximum ambient operating temperature from 40F to 130F degrees. Certified in compliance to CUL requirement Weather tightness rating IP66. Assembled on a unitized removable tray with Tyco quick disconnect plug resisting to 221F degrees.

J. The current supplying the LEDs shall be reduced by the driver if the internal temperature exceeds 185F, as a protection to the LEDs and the electrical components. Output is protected from short circuits, voltage overload and current overload. Automatic recovery after correction.

K. Surge Protector: LED Driver 3 poles surge Protectors that protect Line Ground, Line Neutral, and Neutral Ground in accordance with IEEE / ANSI C62.41.2 guidelines.

2.4 GENERAL REQUIREMENTS FOR POLES AND SUPPORT COMPONENTS

A. Structural characteristics; Comply with AASHTO LTS-4-M.

1. Wind-Load strength of poles: Adequate at indicated height above grade without failure permanent deflection, or whipping in steady winds of 100mph with a gust of 1.3.
2. Strength analysis: For each pole, multiply the actual equivalent projected area of luminaires and brackets by a factor of 1.1 to obtain the equivalent projected area to be used in pole selection strength analysis.

B. Luminaire attachment provisions: comply with luminaire manufacturer' mounting requirements. Use stainless-steel fasteners and mounting bolts unless otherwise indicated.

C. Mountings, fasteners, and appurtenances: corrosion-resistant items compatible with support components.

D. Power installed screw foundations: Factory fabricated by pole manufacturer, with structural steel complying with ASTM A 36/A 36M and hot-dip galvanized according to ASTM A123/A 123M; and with top-plate and mounting bolts to match pole base flange and strength required to support pole, luminaire, and accessories.

E. Coordinate color and finish with the CTDOT PM.

2.5 STEEL POLES:

A. Poles: ASTM A572, Galvanized Steel with access handhole in pole wall.

1. Shape: Round, tapered/Round, straight

2. Mounting provisions: Butt flange for bolted mounting on foundation or breakaway support.

C. Pole-top tenons: Fabricated to support luminaire or luminaires and brackets indicated, and securely fastened to pole top.

D. Grounding and bonding lugs: welded ½-inch threaded lug, complying with requirements in Division 26 Section 26 05 26 "Grounding and Bonding for Electrical Systems", listed for attaching grounding and bonding conductors of type and size listed in that section, and accessible through handhole.

E. Brackets for luminaires: Detachable, with pole and adapter fittings of cast aluminum. Adapter fitting welded to pole and bracket, then bolted together with stainless-steel bolts.

1. Tapered oval cross section, with straight tubular end section to accommodate luminaire.

2. Finish: Same as luminaire.

F. Prime-coat finish: manufacturer's standard prime-coat finish ready for field painting.

G. Steel finish: Comply with NAAMM's "Metal Finishes Manual for Architectural and Metal Products" for recommendations for applying and designating finishes.

2.6 WOOD POLES:

A. Wood poles shall conform to the pertinent requirements of ANSI 05.1, AWPA C-1 and ACPA C-4.. Wood poles shall be of the length specified on the plans or as ordered by the CTDOT PM. The preservative treatment of the pole shall be done in accordance with AASHTO M 133.

B. The Anchors shall be a four-way sliding plate. The anchor rod to be used for guying the pole shall be of drop steel and shall be hot-dip galvanized. The anchor guy strand wire shall be 3/8-inch 7-wire strand supplied with a zinc coating by the hot-dip galvanized process in accordance with ASTM A 475 for zinc-coated steel wire strand, and hall have a minimum breaking strength of strand of 11,200 pounds for utilities. The guy wire protector to be used shall be of the half-round type either fabricated from high impact 13454A polyvinyl chloride ASTMD 1784 compound standard. It shall have hot-dip galvanized steel clamps. The steel clamps shall conform to ASTM requirements A 36 for steel and A 123 for galvanization. There will be 3 clamps which will accept any strand size 1/4 inch diameter and larger, and any anchor rod up to a 1 inch diameter.

C. Brackets shall be fabricated from tubular steel with an upsweep design and shall accommodate a 2" slip-fitter type luminaire. The bracket shall be galvanized and designed for wood pole attachment. Length shall be as called for on the plans.

D. Ground rods shall be 3/4-inch x 10-foot copper-clad steel with an approved square head bolt-type ground clamp.

E. Ground wire shall be #8 AWG stranded bare soft-drawn copper.

F. Conduit shall comply with Section 26 05 33 “Raceway and Boxes for Electrical Systems”

G. Back guy or braces shall be encased in high visibility yellow plastic safety covers to a height of eight feet above ground.

H. The wood pole, with required anchors, bracket, ground rod and ground wire, including excavation of earth or rock, shall be installed as detailed, at the locations shown on the plans.

I. The actual location of anchor shall be as indicated on the plans and directed by the CTDOT PM.

PART 3 - EXECUTION

3.1 LUMINAIRE INSTALLATION

A. Install lamps in each luminaire.

B. Fasten luminaire to indicated structural supports.
   1. Use fastening methods and materials selected to resist seismic forces defined for the application and approved by manufacturer.

C. Adjust luminaires that require field adjustment or aiming.

3.2 EXAMINATION

A. Verify foundations are ready to receive fixtures.

3.3 POLE INSTALLATION

A. Alignment: Align pole foundations and poles for optimum directional alignment of luminaires and their mounting provisions on the pole.

B. Foundation-mounted poles: mount pole with leveling nuts, and tighten top nuts to torque level recommended by pole manufacturer.

C. Poles and pole foundations set in concrete paved areas: install poles with minimum of 6-inch wide, unpaved gap between the pole or pole foundation and the edge of adjacent concrete slab.

3.4 INSTALLATION OF INDIVIDUAL GROUND-MOUNTING LUMINAIRES

A. Install on concrete base per the Trade Contract drawings. Mount pole with leveling nuts, and tighten top nuts to torque level recommended by pole manufacturer..

B. Cast conduit into base and finish by troweling and rubbing smooth. Concrete materials, installation and finish are in Division 03.

3.5 CORROSION PREVENSION

A. Aluminum: Do not use in contact with earth concrete. When in direct contact with a dissimilar metal, protect aluminum by insulating fittings or treatment.

B. Steel conduits: Comply with Section 26 05 33 “Raceway and Boxes for Electrical Systems” In concrete foundations, wrap conduit with 0.010-inch thick, pipe-wrapping plastic tape applied with a 50 percent overlap.

3.6 GROUNDING:

A. Ground metal poles and support structures according to Section 26 05 26 “Grounding and bonding for electrical systems”

3.7 FIELD QUALITY CONTROL

A. Inspect each installed fixture for damage. Replace damaged fixtures and components.

B. Illumination observations: verify normal operation of lighting units after installing luminaires and energizing circuits with normal power source.

C. Illumination tests:

1. Measure light intensities at night. Use photometers with calibration referenced to NIST standards. Comply with the following IESNA testing guides:

a. IESNA LM-64, “Photometric Measurements of Parking Areas”

b. IESNA LM-50, “Photometric Measurements of Roadway Lighting Installations”

c. IESNA LM-72, “Directional Positioning of Photometric Data”

D. Prepare a written report of tests, inspections, observations, and verifications indicating and interpreting results. If adjustments are made to lighting system, retest to demonstrate compliance with standards.

E. Operate each luminaire after installation and connection. Inspect for improper connections and operation.

F. Take measurements during night sky, without moon or with heavy overcast clouds effectively obscuring moon.

3.8 ADJUSTING

A. Aim and adjust luminaries to provide illumination levels and distribution as indicated on Drawings.

3.9 CLEANING

A. Clean photometric control surfaces as recommended by manufacturer.

B. Clean finishes and touch up damage.

3.10 PROTECTION OF FINISHED WORK

A. Protect surfaces from contact with contaminating substances and from damage resulting from construction operations or other causes so surfaces are without deterioration or damage at time of Substantial Completion. If, despite such protection, damage or deterioration occurs, remove damaged or deteriorated components immediately and replace.

END OF SECTION 26 56 26

SECTION 26 56 29 – SERVICE ENTRANCE AND CABINET

PART 1 – GENERAL

1.1 This item shall consist of furnishing and installing a service entrance and cabinets of the type specified as detailed on the plans at the location shown on the plans or as directed by the CTDOT PM and in accordance with these specifications. Included in this work, where called for, are service entrance cabinet, lighting control cabinet, electrical components, service entrance conductors and conduit, foundations, transformer pad, fence, metering provisions and utility work.

1.2 Related Requirements

A. Section 31 23 16.13 Trenching

PART 2 – PRODUCTS

2.1 Cabinets: The service entrance cabinet and the lighting control cabinet shall be sheet aluminum and conform to NEMA type 3R enclosure requirements. Type and dimensions are as called for on the plans. The doors shall be hinged, weatherproof gasketed, with handle and Conn-1 lock for the lighting control cabinet, and a stainless steel door handle with hasp for utility company padlock for the service entrance cabinet. The cabinet shall have a full- size backboard of 3/4-inch smooth marine grade plywood, painted black.

2.2 Instrument Transformer Cabinet: The instrument transformer cabinet shall conform to the requirements for the service cabinet.

2.3 Meter Socket and Enclosure: The meter socket and enclosure shall conform to utility company specifications.

2.4 Pedestal:

Shaft: The shaft shall be made of ASTM B 210 Grade 6063-T6 or ASTM B 221 Grade 6005-T5 aluminum alloy and shall be either a seamless tapered tube with a 6- inch outside diameter at the base and a 4 1/2-inch outside diameter at the top, or a seamless straight tube with a 4 1/2-inch outside diameter. The height of the pedestal shall be as required by the item. The shaft shall have a minimum wall thickness of 125 inches and shall be devoid of welding except at the base. The shaft shall be satin brush finished and each shaft shall be individually protected from scratches, dents and abrasions during handling and shipping.

Base: The base shall be a permanent mold casting of 356 aluminum alloy conforming to ASTM B 108 and shall be of the dimensions shown on the plans. The tapered shaft shall be secured to the base by means of a circumferential fillet weld on the inside of the base top, and the straight shaft shall be secured by means of threads and machine screws, which when set, shall be flush with the base top. The base shall be provided with a cast aluminum door with dimensions shown on the plans, which shall be held in place by an approved locking device. Each base shall be provided with a grounding

stud. All hardware used on the pedestal shall be 304 stainless steel conforming to ASTM A 276.

2.5 Foundations: Concrete shall be Class "A." Anchor bolts: The anchor bolts shall be ASTM A 36 steel rods having a minimum yield of 36,000 psi. The dimensions shall be as shown on the plans. Each anchor bolt shall have a 90- degree bend at one end and shall be threaded at the other end for a sufficient length to properly mount the pedestal or controller. Threads, nuts, flat washers and lock washers shall be galvanized as per ASTM A 153/A 153M. Pedestal foundation may be precast.

2.6 Ground Rod: The ground rod shall be dimensioned as shown on the plans, copper clad steel. The clamp shall be a square head bolt type.

2.7 Conduit:

Rigid Metal Conduit: Rigid Metal Conduit (RMC) and fittings shall be galvanized steel. Each section of conduit shall be labeled as UL listed, and shall conform to the requirements of the latest UL and ANSI standards for Rigid Metal Conduit. Set-screw or compression fittings shall not be used.

Intermediate Metal Conduit: Intermediate Metal Conduit (IMC) and fittings shall be galvanized steel. Each section of conduit shall be labeled as UL listed, and shall conform to the requirements of the latest UL and ANSI standards for Intermediate Metal Conduit. Set-screws or compression fittings shall not be used.

Polyvinyl Chloride Conduit: Polyvinyl Chloride Conduit (PVC) and fittings shall be UL listed, and shall conform to the requirements of the latest UL and ANSI standards for Polyvinyl Chloride Conduit. Schedule 40 grade shall be used where underground, Schedule 80 grade shall be used on surface.

Liquid Tight Flexible Metal Conduit: Liquid tight flexible metal conduit shall consist of a continuous strip of flexible galvanized metal, coated with an extruded jacket of polyvinyl chloride. Liquid tight flexible metal conduit shall be suitable for use in wet locations and shall meet the requirements of the latest UL and ANSI standards for liquid tight flexible metal conduit.

2.8 Conductors:

Insulation: Insulation type, size, and voltage rating shall be as shown on the plans. Insulation shall be permanently color identified throughout its entire length. Color shall be as called for on the plans. A green, white or natural gray color shall not be used unless it is a grounded conductor. The rating, type, size, and manufacturer shall be durably marked in accordance with the NEC.

Conductor: Conductors shall be single conductor, stranded, copper, meeting the latest ICEA, UL, NEMA, and FS for the type specified.

2.9 Photoelectric Control: The photoelectric control shall have an adjustable turn on setting set at approximately 2 foot-candles (20 lux) with a time delay of at least 3 to 5 seconds. The control relay shall have single pole double throw contacts rated for 1000 watts. The coil shall operate at 120 Volts AC. It shall be applicable to the electrically operated, mechanically held contactor. Conductors shall be #12 AWG conforming to

conductors section above. The manual switch shall be a three-way toggle switch mounted in a single gang utility box.

2.10 Contactor: The control contactor shall be of the size, rating and number of poles, as shown on the plans. It shall be electrically operated (120 volt), and mechanically held.

2.11 Control Transformer: The transformer shall be dry type, single-phase, two winding for wall mounting, of the size rating and voltages as called for on the plans.

2.12 Circuit Breakers: Circuit breakers shall be thermal magnetic type, non-enclosed, front-connecting, for mounting to the backboard. The number of poles, voltage rating and current rating shall be as shown in the plans.

2.13 A utility light shall be mounted in the cabinet with porcelain or plastic base, pull chain and incandescent lamp.

2.14 Ground Fault-Circuit Interrupter Receptacle: The ground fault-circuit interrupter receptacle shall be 20 amp, 125 volt, 60 HZ Class A, and shall be UL listed.

2.15 Main Disconnect Safety Switch: The main disconnect safety switch shall be a heavy-duty, non-fusible, three pole, single throw switch, with a manual lever, appropriate service grounding kit, rated for 480 volts, with a current rating as shown on the plans, NEMA Type 1 housing, UL-listed, and suitable for use as service equipment

PART 3 – EXECUTION

3.1 CONDUIT INSTALLATION

All work shall be constructed as shown on the plans or as required by the utility company and directed by the CTDOT PM. The Trade Contractor shall give adequate notice to the utility company for scheduling of work by utility.

The installation of the service conduit of the size and type specified, and all the conduit required in the concrete pad or concrete foundation, shall conform to the following for the type of installation required: The conduit shall be installed in the locations and to the dimensions shown on the plans or as directed by the CTDOT PM. All conduit runs shall be installed in a neat and workmanlike manner in accordance with recognized trade practices. Trenching and backfilling of conduit shall conform to Section 31 23 16.13 Trenching. All conduit shall be installed in strict accordance with the current NEC. Where conduit is to be capped, a commercial pipe or conduit cap shall be used. An expansion fitting shall be used wherever required by an expansion joint in the structure. Upon completion of the work, all conduits shall be cleaned, swabbed and free from obstructions and burrs. For buried conduit, marking tape shall be installed in the trench at the depth and to the requirements as set forth in the Section 31 23 16.13 Trenching. After all cable has been installed, U.L. approved duct sealing compound shall be installed in the ends of all conduit which terminates in foundations, handholes, junction boxes and manholes.

Conduit Surface: Beam clamps or conduit strips with back spacers shall be provided at intervals in accordance with the NEC. Expansion fittings shall be installed at all expansion joints. All surface mounted conduit on wood poles shall be bonded to a

driven ground rod. Stand-offs shall be installed in accordance with serving utility company regulations.

Conduit in Trench: Trenches shall be of the depth and cross section shown on the plans or as directed by the CTDOT PM. All conduit shall have a minimum covering of 2 feet.

Conduit Under Roadway: Installations shall be such as to avoid pockets in runs. Conduit shall have a minimum cover of 2 feet. Each end of conduit runs shall terminate with a cap in a concrete handhole as shown on the plans. The Trade Contractor shall coordinate the placement of the conduit prior to the placement of the pavement.

Where conduit is to be installed under an existing roadway a trench shall be opened and conduit installed as shown on plans, or as directed by the CTDOT PM. The trench shall be backfilled with suitable material and the surface shall be restored to original condition.

Conduit in Structure: It shall be the Trade Contractor's responsibility to coordinate the setting of all conduit in structure prior to pouring concrete. Expansion fittings shall be installed at all expansion joints. Where shown on the plans, outlet boxes with the conduits properly connected and conduit hanger inserts with proper sized nuts installed, shall be accurately and securely placed in the forms for concrete. Care shall be taken during the placing of the concrete around these boxes and inserts to consolidate the concrete thoroughly, preventing voids and honeycomb and to prevent any material displacement of the boxes or inserts. Sealed bonding bushing shall be provided at each conduit outlet in all boxes.

Conduit Under Slope Protection: Conduit shall be installed in trench under bridge slope protection or between the slope protection and the edge of pavement at the locations and to the dimensions shown on the plans or as directed by the CTDOT PM. The conduit shall have a minimum cover of two feet under finish grade and each end of the conduit shall extend 10 feet beyond the limits of the slope protection. All conduit shall terminate with a standard pipe cap and the trench shall be backfilled with suitable material. The Trade Contractor shall coordinate the placement of the conduit prior to the placement of slope protection.

Where service entrance conductors are provided by the utility company, the Trade Contractor shall provide pull wire.

3.2 TRENCHING AND BACKFILLING

Trenching and backfilling for conduit shall comply with Section 31 23 16.13 and conform to the following:

Trenches shall be of the depth and cross-section shown on the plans. The sand for encasement shall be placed as shown on the plans.

After the excavation is completed, the Trade Contractor shall notify the CTDOT PM; and no conduit or cable shall be placed in the excavated area until the CTDOT PM has approved the depth and cross-section of the excavation.

Suitable material removed in making the excavation shall be used for backfill. No stones or coarse material shall be placed adjacent to the conduit or cable. All surplus or

unsuitable material shall be removed and disposed of as directed. Should additional material be required for backfilling, it shall be obtained from sources approved by the CTDOT PM.

All backfill shall be placed in layers of not more than 6 inches in depth after compaction and shall be thoroughly compacted by means of vibrators or by pneumatic tampers. Hand tampers shall be used only with permission of the CTDOT PM. The backfill shall be brought to the surface of the surrounding ground and neatly graded, except that where excavation is required in existing lawn or grass areas, the backfill shall be brought to within 4 inches of the top of the trench; and the remainder shall be filled with topsoil to 3/4 inch above adjacent areas as directed by the CTDOT PM. Marking tape shall be installed in conformance with Section 16-345 of the Regulations of the Department of Public Utility Control, the Trade Contractor is responsible for notifying "Call Before You Dig" prior to commencing any excavation, including milling, reclamation or trenching; and the Trade Contractor shall install a warning tape located a minimum of 12 inches above all conduits, wires, cables, utility pipes, drainage pipes, underdrains, or other facility, unless the excavation's depth, other underground facilities, or other engineering considerations make this minimum separation unfeasible. The warning tape shall be of durable impervious material, designed to withstand extended under- ground exposure without material deterioration or fading of color. The tape shall be of the color assigned to the type of facility for surface markings and shall be durably imprinted with an appropriate warning message. The tape shall also comply with the specific requirements of the utility that owns the facility.

All tapes, unless otherwise directed by the specific utility, shall be detectable to a depth of at least 3 feet with a commercial radio-type metal locator.

Assigned colors are:

Green—Storm and sanitary sewers and drainage systems, including force mains and other non-hazardous materials

Blue—Water

Orange—Communication lines or cables, including, but not limited to, those used in, or in connection with, telephone, telegraph, fire signals, cable television, civil defense, data systems, electronic controls and other instrumentation

Red—Electrical power lines, electrical power conduits and other electrical power facilities, traffic signals and appurtenances and illumination facilities

Yellow—Gas, oil petroleum products, steam, com- pressed air, compressed gases and all other hazardous material except water

Brown—Other Purple—Radioactive materials

Payment for warning tapes shall be included in the bid price for the pay item of the specific facility for which the tape is used.

Where trenching occurs in riprap or crushed stone areas, the surface material shall be replaced in kind. Where trenching in bituminous concrete sidewalk or paved areas, the trench shall be sawcut and backfilled to within the depth from the surface required to replace the removed sidewalk or pavement structure, which shall then be replaced.

The edges of all trenches in paved surfaces shall be sawcut to neat lines prior to paving. All trenches in existing paved surfaces, which parallel the curb, shall be no more than 1 1/2 feet from the curb, or when no curb is present, the apparent edge of road. The exception shall be to avoid existing appurtenances such as catch basins, water gates, manholes etc.

3.3 ELECTRICAL COMPONENT INSTALLATION

The electrical components shall be mounted to the plywood back panel in each cabinet, and wired as shown on the plans or as directed.

The Trade Contractor shall label all circuits in each cabinet. The photoelectric control shall be located as indicated on the plans. The cell shall be positioned according to the manufacturer's recommendations. No. 12 conductors shall be run from the cell to the service cabinet and the necessary connections made for proper operation.

END OF SECTION 26 56 29

SECTION 26 56 30 – TEMPORARY ILLUMINATION UNIT

PART 1 – GENERAL

1.1 SECTION INCLUDES

A. Under this item the Trade Contractor shall furnish and install a fiberglass pole, anchors, bracket, luminaire with ballast, and necessary hardware for lighting during construction, as directed by the CTDOT PM. The Trade Contractor shall remove the temporary illumination unit upon completion of construction and at the end of the project, the temporary illumination unit shall become the property of the Trade Contractor.

PART 2 – MATERIALS

2.1 POLE SHAFT

A. The shaft shall be fiberglass reinforced plastic (FRP). The pole shaft shall be constructed by the filament winding process using glass filaments continuously impregnated with thermo-setting, color pigmented polyester resin. The resin is to be uniformly pigmented to match the final grey color of the finished FRP pole. The pole is to contain solid coloration throughout the entire wall thickness and is to contain ultraviolet (UV) inhibitors. The pole is to contain a minimum of 65 percent fiberglass by weight when finished. The pole is to be round, tapered, hollow, and reinforced in the support arm and hardware attachment areas. The butt end is to be enlarged so as to provide resistance to rotation and pull out. The pole is to be non-conductive and chemically inert. The pole shall meet the 1985 AASHTO breakaway standards, and shall be approved by FHWA for use on Federal Aid projects. The pole shaft shall be of sufficient length so that the luminaire mounting height over the roadway will be 30 feet.

2.2 POLE TOP CAP

A. A cast aluminum removable cap shall be securely mounted to the top of the pole. The cap shall be corrosion resistant and must remain in place when subjected to the maximum wind loading for which the pole is designed.

2.3 BRACKET ATTACHMENT

A. The top of the pole is to be pre-drilled for two M16 thru bolts on 9 1/2 in. centers starting 4 in. below the top of the pole. A 1.5 in. wire exit hole shall be centered 1/2 the distance between the two holes.

2.4 BRACKET ARM

A. Arms shall be 10 feet in length (single member) of an upsweep design fabricated from tubular aluminum. The luminaire end shall have a 2.5 in. outside diameter.

2.5 FINISH

A. The pole exterior surface is to be grey with a natural (textured) finish. The surface of the pole will be uniform for the entire length of the pole. The laminate shall contain colored pigment, the color of the final coating and be of uniform color throughout the entire wall thickness of the pole. A coating shall be applied to the pole to maintain surface integrity against the damaging effects of sunlight and extremes in weather. The coating is to be highly weather resistant pigmented polyurethane. The coating thickness shall have minimum dry film thickness of 0.015 in.

B. The surface shall be tested for a minimum of 2500 hours of accelerated testing in accordance with ASTM G53.84 (UV-B lamp 313 NM wave length, 130 degree F, cycle lamp 4 hours on 4 hours off) with the following results:

Fiber exposure:	none
Crazing:	none
Checking:	none
Chalking:	none
Color:	may dull slightly

2.6 STRENGTH

A. The pole (with luminaire) shall be designed to withstand a wind speed of 90 mph. The manufacturer is to certify that each FRP pole supplied (per this specification) shall meet the following requirements:

1. Vertical Load - a load is to be applied in 50 lb increments at a point 3 in. from the end of the bracket arm until an ultimate load of 300 lbs has been applied. This 300 lbs. load is to be held for a minimum of 5 minutes without structural damage.

2. Transverse Horizontal Load - A load is to be applied in 50 lb. increments at a point 3 in. from the end of the bracket arm until an ultimate load of 250 lbs. has been applied. This 250 lbs. load is to held for a minimum of 5 minutes without structural damage.

3. Horizontal Load - A load is to be applied in 100 lb increments at a point 9 in. from the top of the pole until an ultimate load of 900 lb., (for 30 foot M.H.) or 1150 lb (for 35 foot M.H.) has been applied. Deflections shall not exceed dimensions shown below. This load is to be held for a minimum of 5 minutes without pole failure and the pole is to have no more than 1 percent permanent deflection after unloading. Maximum deflection under load shall be within the tolerances specified by the manufacturer.

2.7 WEIGHT

A. The minimum pole weight shall be 120 lb. The weight of each pole shall not deviate from the specified weight by more than +/- 10 lb.

2.8 MARKING

A. Each pole is to be permanently marked in characters 0.2 inch minimum high on a brass or stainless steel plate with the manufacturer's identification symbol, month and year of manufacture.

2.9 SHIPPING

A. Each pole shall be individually spiral wrapped with creped paper and overwrapped with plastic shrink film for protection during shipping and storage. The wrapping shall incorporate a zip string running the entire length for ease in removing the wrapping.

2.10 WARRANTY

A. The pole shall be warranted to be free of defects in materials and workmanship for a period of three years from the date of purchase.

B. Anchors shall conform to the pertinent requirements of Section 26 56 26, Site Lighting.

C. The luminaire shall conform to the pertinent requirements of Section 26 56 26, Site Lighting and shall be 200 watt high pressure sodium. The socket shall be adjustable to provide I.E.S. light distribution type M-S-II. The ballast shall be under guarantee of the manufacturer for a period of one year commencing when the unit is installed and accepted.

D. All temporary illumination shall be grounded per the latest adopted National Electric Code.

PART 3 – EXECUTION

A. The fiberglass pole shall be set in the earth to the required depth and proper compaction of backfill provided around the pole and then attached to the anchors with guys as necessary. The brackets shall be attached to the pole so that the luminaire mounting height over the roadway will be 30 feet. The bracket and luminaire assembly shall be perpendicular to the center line of the roadway.

B. Upon completion of the project the temporary illumination units shall be removed and shall remain the property of the Trade Contractor.

END OF SECTION 26 56 30

SECTION 27 05 36 - CABLE TRAYS FOR COMMUNICATIONS SYSTEMS

PART 1 - GENERAL

1.1 RELATED DOCUMENTS

A. Drawings and general provisions of the Trade Contract, including General and Supplementary Conditions Division 01 Specifications Section and Division 26 Sections, apply to this Section.

1.2 SUMMARY

A. Section Includes:

1. Ladder cable trays.

1.3 ACTION SUBMITTALS

A. Product Data: For each type of cable tray.

1. Include data indicating dimensions and finishes for each type of cable tray indicated.

B. Shop Drawings: For each type of cable tray.

1. Show fabrication and installation details of cable trays, including plans, elevations, and sections of components and attachments to other construction elements. Designate components and accessories, including clamps, brackets, hanger rods, splice-plate connectors, expansion-joint assemblies, straight lengths, and fittings.

C. Delegated-Design Submittal: For seismic restraints.

1. Seismic-Restraint Details: Signed and sealed by a qualified professional engineer, licensed in the state where Project is located, who is responsible for their preparation.

2. Design Calculations: Calculate requirements for selecting seismic restraints.

3. Detail fabrication, including anchorages and attachments to structure and to supported cable trays.

1.4 INFORMATIONAL SUBMITTALS

A. Coordination Drawings: Floor plans and sections, drawn to scale, on which the following items are shown and coordinated with each other, using input from installers of the items involved:

1. Include scaled cable tray layout and relationships between components and adjacent structural, electrical, and mechanical elements.

2. Vertical and horizontal offsets and transitions.

3. Clearances for access above and to side of cable trays.

4. Vertical elevation of cable trays above the floor or below bottom of ceiling structure.

B. Seismic Qualification Certificates: For cable trays, accessories, and components, from manufacturer.

1. Basis for Certification: Indicate whether withstand certification is based on actual test of assembled components or on calculation.

2. Dimensioned Outline Drawings of Equipment Unit: Identify center of gravity and locate and describe mounting and anchorage provisions.

3. Detailed description of equipment anchorage devices on which the certification is based and their installation requirements.

C. Field quality-control reports.

PART 2 - PRODUCTS

2.1 PERFORMANCE REQUIREMENTS

A. Delegated Design: Engage a qualified professional engineer, as defined in Division 01 Section "Quality Requirements," to design cable tray supports and seismic bracing.

B. Seismic Performance: Cable trays and supports shall withstand the effects of earthquake motions determined according to ASCE/SEI 7

1. The term "withstand" means "the cable trays will remain in place without separation of any parts when subjected to the seismic forces specified."

2. Component Importance Factor: 1.0.

2.2 GENERAL REQUIREMENTS FOR CABLE TRAYS

A. Cable Trays and Accessories: Identified as defined in NFPA 70 and marked for intended location, application, and grounding.

1. Source Limitations: Obtain cable trays and components from single manufacturer.

B. Sizes and Configurations: See the Cable Tray Schedule on Drawings for specific requirements for types, materials, sizes, and configurations.

C. Structural Performance: See articles for individual cable tray types for specific values for the following parameters:

1. Uniform Load Distribution: Capable of supporting a uniformly distributed load on the indicated support span when supported as a simple span and tested according to NEMA VE 1.

2. Concentrated Load: A load applied at midpoint of span and centerline of tray.

3. Load and Safety Factors: Applicable to both side rails and rung capacities.

2.3 LADDER CABLE TRAYS

A. Manufacturers: Subject to compliance with requirements available manufacturers offering products that may be incorporated into the Work include, but are not limited to, the following:

1. Chalfant Manufacturing Company.
2. Cooper B-Line, Inc.
3. MP Husky.

B. Description:

1. Configuration: Two I-beam side rails with transverse rungs welded to side rails.
2. Rung Spacing: 12 inches (300 mm) o.c.
3. Radius-Fitting Rung Spacing: 9 inches (225 mm) at center of tray's width.
4. Minimum Cable-Bearing Surface for Rungs: 7/8-inch (22-mm) width with radius edges.
5. No portion of the rungs shall protrude below the bottom plane of side rails.
6. Structural Performance of Each Rung: Capable of supporting a maximum cable load, with a safety factor of 1.5, plus a 200-lb (90-kg) concentrated load, when tested according to NEMA VE 1.
7. Minimum Usable Load Depth: 3 inches (75 mm).
8. Straight Section Lengths: 10 feet (3 m) except where shorter lengths are required to facilitate tray assembly.
9. Width: 12 inches (150 mm) unless otherwise indicated on Drawings.
10. Fitting Minimum Radius: 24 inches (600 mm).
11. Class Designation: Comply with NEMA VE 1, Class 12B.
12. Splicing Assemblies: Bolted type using serrated flange locknuts.
13. Hardware and Fasteners: Steel, zinc plated according to ASTM B 633.
14. Splice Plate Capacity: Splices located within support span shall not diminish rated loading capacity of cable tray.

2.4 MATERIALS AND FINISHES

A. Aluminum:

1. Materials: Alloy 6063-T6 according to ANSI H 35.1/H 35.1M for extruded components and Alloy 5052-H32 according to ANSI H 35.1/H 35.1M for fabricated parts.
2. Hardware: Chromium-zinc-plated steel, ASTM F 1136.
3. Hardware for Aluminum Cable Tray Used Outdoors: Stainless steel, Type 316, ASTM F 593 and ASTM F 594.

2.5 CABLE TRAY ACCESSORIES

A. Fittings: Tees, crosses, risers, elbows, and other fittings as indicated, of same materials and finishes as cable tray.

B. Barrier Strips: Same materials and finishes as for cable tray.

C. Cable tray supports and connectors, including bonding jumpers, as recommended by cable tray manufacturer.

2.6 WARNING SIGNS

A. Lettering: 1-1/2-inch- (40-mm-) high, black letters on yellow background with legend "Warning! Not To Be Used as Walkway, Ladder, or Support for Ladders or Personnel."

B. Comply with requirements for fasteners in Division 26 Section "Identification for Electrical Systems."

2.7 SOURCE QUALITY CONTROL

A. Testing: Test and inspect cable trays according to NEMA VE 1.

PART 3 - EXECUTION

3.1 CABLE TRAY INSTALLATION

A. Install cable trays according to NEMA VE 2.

B. Install cable trays as a complete system, including fasteners, hold-down clips, support systems, barrier strips, adjustable horizontal and vertical splice plates, elbows, reducers, tees, crosses, cable dropouts, adapters, covers, and bonding.

C. Install cable trays so that the tray is accessible for cable installation and all splices are accessible for inspection and adjustment.

D. Remove burrs and sharp edges from cable trays.

E. Join aluminum cable tray with splice plates; use four square neck-carriage bolts and locknuts.

F. Fasten cable tray supports to building structure and install seismic restraints.

G. Design fasteners and supports to carry cable tray, the cables, and a concentrated load of 200 lb (90 kg). Comply with requirements in Division 26 Section "Hangers and Supports for Electrical Systems." Comply with seismic-restraint details according to Division 26 Section "Vibration and Seismic Controls for Electrical Systems."

H. Place supports so that spans do not exceed maximum spans on schedules and provide clearances shown on Drawings. Install intermediate supports when cable weight exceeds the load-carrying capacity of the tray rungs.

I. Construct supports from channel members, threaded rods, and other appurtenances furnished by cable tray manufacturer. Arrange supports in trapeze or wall-bracket form as required by application.

J. Support bus assembly to prevent twisting from eccentric loading.

K. Install center-hung supports for single-rail trays designed for 60 versus 40 percent eccentric loading condition, with a safety factor of 3.

L. Locate and install supports according to NEMA VE . Do not install more than one cable tray splice between supports.

M. Support wire-basket cable trays with trapeze hangers.

N. Make connections to equipment with flanged fittings fastened to cable trays and to equipment. Support cable trays independent of fittings. Do not carry weight of cable trays on equipment enclosure.

O. Install expansion connectors where cable trays cross building expansion joints and in cable tray runs that exceed dimensions recommended in NEMA VE 2. Space connectors and set gaps according to applicable standard.

P. Make changes in direction and elevation using manufacturer's recommended fittings.

Q. Make cable tray connections using manufacturer's recommended fittings.

R. Seal penetrations through fire and smoke barriers. Comply with requirements in Division 07 Section "Firestopping."

S. Install capped metal sleeves for future cables through firestop-sealed cable tray penetrations of fire and smoke barriers.

T. Install cable trays with enough workspace to permit access for installing cables.

U. Install barriers to separate cables of different systems, such as power, communications, and data processing; or of different insulation levels, such as 600, 5000, and 15 000 V.

V. Install permanent covers, if used, after installing cable. Install cover clamps according to NEMA VE 2.

W. Clamp covers on cable trays installed outdoors with heavy-duty clamps.

X. Install warning signs in visible locations on or near cable trays after cable tray installation.

3.2 CABLE TRAY GROUNDING

A. Ground cable trays according to NFPA 70 unless additional grounding is specified. Comply with requirements in Division 26 Section "Grounding and Bonding for Electrical Systems.

B. Cable trays with communications cable shall be bonded together with splice plates listed for grounding purposes or with listed bonding jumpers.

C. Cable trays with control conductors shall be bonded together with splice plates listed for grounding purposes or with listed bonding jumpers.

D. Bond cable trays to power source for cables contained within with bonding conductors sized according to NFPA 70, Article 250.122, "Size of Equipment Grounding Conductors."

3.3 CABLE INSTALLATION

A. Install cables only when each cable tray run has been completed and inspected.

B. Fasten cables on horizontal runs with cable clamps or cable ties according to NEMA VE 2. Tighten clamps only enough to secure the cable, without indenting the cable jacket. Install cable ties with a tool that includes an automatic pressure-limiting device.

C. Fasten cables on vertical runs to cable trays every 18 inches (450 mm).

D. Fasten and support cables that pass from one cable tray to another or drop from cable trays to equipment enclosures. Fasten cables to the cable tray at the point of exit and support cables independent of the enclosure. The cable length between cable trays or between cable tray and enclosure shall be no more than 72 inches (1800 mm).

E. Tie MI cables down every 36 inches (900 mm) where required to provide a 2-hour fire rating and every 72 inches (1800 mm) elsewhere.

F. In existing construction, remove inactive or dead cables from cable trays.

3.4 CONNECTIONS

A. Remove paint from all connection points before making connections. Repair paint after the connections are completed.

B. Connect pathways to cable trays according to requirements in NEMA VE 2 and NEMA FG 1.

3.5 FIELD QUALITY CONTROL

A. Perform the following tests and inspections:

1. After installing cable trays and after electrical circuitry has been energized, survey for compliance with requirements.

2. Visually inspect cable insulation for damage. Correct sharp corners, protuberances in cable trays, vibrations, and thermal expansion and contraction conditions, which may cause or have caused damage.

3. Verify that the number, size, and voltage of cables in cable trays do not exceed that permitted by NFPA 70. Verify that communications or data-processing circuits are separated from power circuits by barriers or are installed in separate cable trays.

4. Verify that there are no intruding items such as pipes, hangers, or other equipment in the cable tray.

5. Remove dust deposits, industrial process materials, trash of any description, and any blockage of tray ventilation.

6. Visually inspect each cable tray joint and each ground connection for mechanical continuity. Check bolted connections between sections for corrosion. Clean and retorque in suspect areas.

7. Check for improperly sized or installed bonding jumpers.

8. Check for missing, incorrect, or damaged bolts, bolt heads, or nuts. When found, replace with specified hardware.

9. Perform visual and mechanical checks for adequacy of cable tray grounding; verify that all takeoff raceways are bonded to cable trays. Test entire cable tray system for continuity. Maximum allowable resistance is 1 ohm.

B. Prepare test and inspection reports.

3.6 PROTECTION

A. Protect installed cable trays and cables.

1. Install temporary protection for cables in open trays to safeguard exposed cables against falling objects or debris during construction. Temporary protection for cables and cable tray can be constructed of wood or metal materials and shall remain in place until the risk of damage is over.

2. Repair damage to galvanized finishes with zinc-rich paint recommended by cable tray manufacturer.

3. Repair damage to paint finishes with matching touchup coating recommended by cable tray manufacturer.

END OF SECTION 27 05 36

SECTION 27 11 00 - COMMUNICATIONS EQUIPMENT ROOM FITTINGS

PART 1 - GENERAL

1.1 RELATED DOCUMENTS

A. Drawings and general provisions of the Trade Contract, including General and Supplementary Conditions, Division 01 Specification Sections, and Division 26 Sections apply to this Section.

1.2 SUMMARY

A. Section Includes:

1. Telecommunications mounting elements.
2. Backboards.
3. Telecommunications equipment racks and cabinets.
4. Uninterruptable Power Supply (UPS)
5. Power Distribution Unit (PDU)
6. Grounding.

B. Related Requirements:

1. Division 26, “Basic Electrical Requirements” for submittals.
2. Division 27 Section "Cable Trays for Communications Systems" for cable trays and accessories.
3. Division 27 Section "Communications Backbone Cabling" for voice and data cabling associated with system panels and devices.
4. Division 27 Section "Communications Horizontal Cabling" for voice and data cabling associated with system panels and devices.
5. Division 28 Section "Conductors and Cables for Electronic Safety and Security" for voice and data cabling associated with system panels and devices.
6. Division 28 Section, Video Surveillance System
7. Division 28 Section, Access Control

1.3 DEFINITIONS

A. BICSI: Building Industry Consulting Service International.

B. LAN: Local area network.

C. RCDD: Registered Communications Distribution Designer.

1.4 ACTION SUBMITTALS

A. Product Data: For each type of product.

1. Include construction details, material descriptions, dimensions of individual components and profiles, and finishes for equipment racks and cabinets.

2. Include rated capacities, operating characteristics, electrical characteristics, and furnished specialties and accessories.

B. Shop Drawings: For communications equipment room fittings. Include plans, elevations, sections, details, and attachments to other work.

1. Detail equipment assemblies and indicate dimensions, weights, loads, required clearances, method of field assembly, components, and location and size of each field connection.

2. Equipment Racks and Cabinets: Include workspace requirements and access for cable connections.

3. Grounding: Indicate location of grounding bus bar and its mounting detail showing standoff insulators and wall mounting brackets.

1.5 INFORMATIONAL SUBMITTALS

A. Qualification Data: For Installer, qualified layout technician, installation supervisor, and field inspector.

B. Seismic Qualification Certificates: For equipment frames from manufacturer.

1. Basis for Certification: Indicate whether withstand certification is based on actual test of assembled components or on calculation.

2. Dimensioned Outline Drawings of Equipment Unit: Identify center of gravity and locate and describe mounting and anchorage provisions. Base certification on the maximum number of components capable of being mounted in each rack type. Identify components on which certification is based.

3. Detailed description of equipment anchorage devices on which the certification is based and their installation requirements.

1.6 QUALITY ASSURANCE

A. Installer Qualifications: Cabling Installer must have personnel certified by BICSI on staff.

1. Layout Responsibility: Preparation of Shop Drawings shall be under the direct supervision of RCDD/NTS.

2. Installation Supervision: Installation shall be under the direct supervision of Registered Technician, who shall be present at all times when Work of this Section is performed at Project site.

3. Field Inspector: Currently registered by BICSI as RCDD to perform the on-site inspection.

PART 2 - PRODUCTS

2.1 PERFORMANCE REQUIREMENTS

A. Seismic Performance: Equipment frames shall withstand the effects of earthquake motions determined according to ASCE/SEI 7.

1. The term "withstand" means "the unit will remain in place without separation of any parts from the device when subjected to the seismic forces specified."

2.2 BACKBOARDS

A. Backboards: Plywood, marine grade, 3/4 by 48 by 96 inches (19 by 1220 by 2440 mm) unless noted otherwise. Comply with requirements for plywood backing panels specified in Division 06 Section "Rough Carpentry." Paint with two coats of fire retardant pant, flat light gray color.

2.3 EQUIPMENT FRAMES

A. Manufacturers: Subject to compliance with requirements, provide products by one of the following:
1. Great Lakes

B. General Frame Requirements:

1. Distribution Frames: Freestanding modular-steel units designed for telecommunications terminal support and coordinated with dimensions of units to be supported.
2. Module Dimension: Width compatible with EIA 310-D standard, 19-inch (480-mm) panel mounting.
3. Finish: Manufacturer's standard, baked-polyester powder coat.

C. Floor-Mounted Racks: Modular-type, steel construction.

1. Vertical and horizontal cable management channels, top and bottom cable troughs, grounding lug, and a power strip.
2. 12” wide rail with threaded mounting holes.
3. Baked-polyester powder coat finish.
4. 54 mounting units.
5. Provide cable rings for vertical cable management, 16 minimum.
6. Provide with water falls for cables.
7. Provide Great Lakes, Cable Management Rack series.

D. Cable Management for Equipment Frames:

1. Metal, with integral wire retaining fingers.
2. Baked-polyester powder coat finish.

3. Provide horizontal crossover cable manager at the top of each relay rack, with a minimum height of two rack units each.

2.4 POWER STRIPS

A. Power Strips: Comply with UL 1363.

1. Listed and labeled as defined in NFPA 70, by a qualified testing agency, and marked for intended location and application.
2. Rack mounting.
3. Six, 20-A, 120-V ac, NEMA WD 6, Configuration 5-20R receptacles.
4. LED indicator lights for power and protection status.
5. LED indicator lights for reverse polarity and open outlet ground.
6. Circuit Breaker and Thermal Fusing: When protection is lost, circuit opens and cannot be reset.
7. Circuit Breaker and Thermal Fusing: Unit continues to supply power if protection is lost.
8. Cord connected with 15-foot (4.5-m) line cord.
9. Rocker-type on-off switch, illuminated when in on position.
10. Peak Single-Impulse Surge Current Rating: 33kA per phase.
11. Protection modes shall be line to neutral, line to ground, and neutral to ground. UL 1449 clamping voltage for all three modes shall be not more than 330 V.

2.5 GROUNDING

A. Comply with requirements in Division 26 Section "Grounding and Bonding for Electrical Systems." for grounding conductors and connectors.

B. Telecommunications Main Bus Bar:

1. Connectors: Mechanical type, cast silicon bronze, solderless compression type wire terminals, and long-barrel, two-bolt connection to ground bus bar.
2. Ground Bus Bar: Copper, minimum 1/4 inch thick by 4 inches wide (6 mm thick by 100 mm wide) with 9/32-inch (7.14-mm) holes spaced 1-1/8 inches (28 mm) apart.
3. Stand-Off Insulators: Comply with UL 891 for use in switchboards, 600 V. Lexan or PVC, impulse tested at 5000 V.
4. For conductors #10 or smaller, provide 42 circuit, 400A panelboard neutral bus bolted to busbar.

C. Comply with J-STD-607-A.

2.6 LABELING

A. Comply with TIA/EIA-606-A and UL 969 for a system of labeling materials, including label stocks, laminating adhesives, and inks used by label printers.

PART 3 - EXECUTION

3.1 ENTRANCE FACILITIES

A. Comply with requirements in Division 26 Section "Raceways and Boxes for Electrical Systems" for materials and installation requirements for underground pathways.

3.2 INSTALLATION

A. Comply with NECA 1.

B. Comply with BICSI TDMM for layout and installation of communications equipment rooms.

C. Bundle, lace, and train conductors and cables to terminal points without exceeding manufacturer's limitations on bending radii. Install lacing bars and distribution spools.

D. Coordinate layout and installation of communications equipment with Owner's telecommunications and LAN equipment (MNR IT) and service suppliers.

1. Meet jointly with MNR IT to exchange information and agree on details of equipment arrangements and installation interfaces.

2. Record agreements reached in meetings and distribute them to other participants.

3. Adjust arrangements and locations of distribution frames, cross-connects, and patch panels in equipment rooms to accommodate and optimize arrangement and space requirements of telephone switch and LAN equipment.

4. Adjust arrangements and locations of equipment with distribution frames, cross-connects, and patch panels of cabling systems of other communications, electronic safety and security, and related systems that share space in the equipment room.

E. Coordinate location of power raceways and receptacles with locations of communications equipment requiring electrical power to operate.

3.3 SLEEVE AND SLEEVE SEAL INSTALLATION FOR ELECTRICAL PENETRATIONS

A. Install sleeves and sleeve seals at penetrations of exterior floor and wall assemblies. Comply with requirements in Division 26 Section "Basic Electrical Requirements."

3.4 FIRESTOPPING

A. Comply with requirements in Division 07 Section " Firestopping."

3.5 GROUNDING

A. Install grounding according to BICSI TDMM, "Grounding, Bonding, and Electrical Protection" Chapter.

B. Comply with J-STD-607-A.

C. Locate grounding bus bar to minimize the length of bonding conductors. Fasten to wall allowing at least 2-inch (50-mm) clearance behind the grounding bus bar. Connect grounding bus bar with a minimum No. 4 AWG grounding electrode conductor from grounding bus bar to suitable electrical building ground.

D. Bond metallic equipment to the grounding bus bar, using not smaller than No. 6 AWG equipment grounding conductor.

1. Bond the shield of shielded cable to the grounding bus bar in communications rooms and spaces.

3.6 IDENTIFICATION

A. Identify system components, wiring, and cabling complying with TIA/EIA-606-A. Comply with requirements in Division 26 Section "Identification for Electrical Systems."

B. Comply with requirements in Division 09 Section "Interior Painting" for painting backboards. For fire-resistant plywood, do not paint over manufacturer's label.

C. Paint and label colors for equipment identification shall comply with TIA/EIA-606-A for Class 2 level of administration including optional identification requirements of this standard.

D. Labels shall be preprinted or computer-printed type.

END OF SECTION 27 11 00

SECTION 27 13 00 - COMMUNICATIONS BACKBONE CABLING

PART 1 - GENERAL

1.1 RELATED DOCUMENTS

A. Drawings and general provisions of the Trade Contract, including General and Supplementary Conditions, Division 01 Specification Sections, and Division 26 Sections, apply to this Section.

1.2 SUMMARY

A. Section Includes:

1. Pathways.
2. UTP cable.
3. Optical fiber cabling.
4. Cable connecting hardware, patch panels, and cross-connects.
5. Cabling identification products.

1.3 DEFINITIONS

A. BICSI: Building Industry Consulting Service International.

B. Cross-Connect: A facility enabling the termination of cable elements and their interconnection or cross-connection.

C. EMI: Electromagnetic interference.

D. IDC: Insulation displacement connector.

E. LAN: Local area network.

F. RCDD: Registered Communications Distribution Designer.

G. UTP: Unshielded twisted pair.

1.4 BACKBONE CABLING DESCRIPTION

A. Backbone cabling system shall provide interconnections between communications equipment rooms, main terminal space, and entrance facilities in the telecommunications cabling system structure. Cabling system consists of backbone cables, intermediate and main cross-connects, mechanical terminations, and patch cords or jumpers used for backbone-to-backbone cross-connection.

B. Backbone cabling cross-connects may be located in communications equipment rooms or at entrance facilities. Bridged taps and splitters shall not be used as part of backbone cabling.

1.5 PERFORMANCE REQUIREMENTS

A. General Performance: Backbone cabling system shall comply with transmission standards in TIA/EIA-568-B.2, when tested according to test procedures of this standard.

1.6 ACTION SUBMITTALS

A. Product Data: For each type of product indicated.

B. Shop Drawings:

1. System Labeling Schedules: Electronic copy of labeling schedules, in software and format selected by Owner.
2. System Labeling Schedules: Electronic copy of labeling schedules that are part of the cabling and asset identification system of the software.
3. Cabling administration drawings and printouts.
4. Wiring diagrams to show typical wiring schematics including the following:
   a. Cross-connects.
   b. Patch panels.
   c. Patch cords.
5. Cross-connects and patch panels. Detail mounting assemblies, and show elevations and physical relationship between the installed components.
6. Cable tray layout, showing cable tray route to scale, with relationship between the tray and adjacent structural, electrical, and mechanical elements. Include the following:
   a. Vertical and horizontal offsets and transitions.
   b. Clearances for access above and to side of cable trays.
   c. Vertical elevation of cable trays above the floor or bottom of ceiling structure.
   d. Load calculations to show dead and live loads as not exceeding manufacturer's rating for tray and its support elements.

1.7 INFORMATIONAL SUBMITTALS

A. Qualification Data: For Installer, qualified layout technician, installation supervisor, and field inspector.

B. Source quality-control reports.

C. Field quality-control reports.

D. Maintenance Data: For splices and connectors to include in maintenance manuals.

1.8 CLOSEOUT SUBMITTALS

A. Software and Firmware Operational Documentation:

1. Software operating and upgrade manuals.
2. Program Software Backup: On magnetic media or compact disk, complete with data files.
3. Device address list.
4. Printout of software application and graphic screens.

1.9 QUALITY ASSURANCE

A. Installer Qualifications: Cabling Installer must have personnel certified by BICSI on staff.

1. Layout Responsibility: Preparation of Shop Drawings, Cabling Administration Drawings, and field testing program development by an RCDD.
2. Installation Supervision: Installation shall be under the direct supervision of Level 2 Installer, who shall be present at all times when Work of this Section is performed at Project site.
3. Testing Supervisor: Currently certified by BICSI as an RCDD to supervise on-site testing.

B. Testing Agency Qualifications: An NRTL.

1. Testing Agency's Field Supervisor: Currently certified by BICSI as an RCDD to supervise on-site testing.

C. Surface-Burning Characteristics: As determined by testing identical products according to ASTM E 84 by a qualified testing agency. Identify products with appropriate markings of applicable testing agency.

1. Flame-Spread Index: 25 or less.
2. Smoke-Developed Index: 50 or less.

D. Electrical Components, Devices, and Accessories: Listed and labeled as defined in NFPA 70, by a qualified testing agency, and marked for intended location and application.

E. Telecommunications Pathways and Spaces: Comply with TIA/EIA-569-A.

F. Grounding: Comply with ANSI-J-STD-607-A.

1.10 DELIVERY, STORAGE, AND HANDLING

A. Test cables upon receipt at Project site.

1. Test optical fiber cable to determine the continuity of the strand end to end. Use optical fiber flashlight.

2. Test optical fiber cable while on reels. Use an optical time domain reflectometer to verify the cable length and locate cable defects, splices, and connector, including the loss value of each. Retain test data and include the record in maintenance data.

3. Test each pair of UTP cable for open and short circuits.

1.11 PROJECT CONDITIONS

A. Environmental Limitations: Do not deliver or install cables and connecting materials until wet work in spaces is complete and dry, and temporary HVAC system is operating and maintaining ambient temperature and humidity conditions at occupancy levels during the remainder of the construction period.

1.12 COORDINATION

A. Coordinate layout and installation of telecommunications pathways and cabling with Owner's telecommunications and LAN equipment and service suppliers.

1.13 SOFTWARE SERVICE AGREEMENT

A. Technical Support: Beginning with Substantial Completion, provide software support for two years.

B. Upgrade Service: Update software to latest version at Project completion. Install and program software upgrades that become available within two years from date of Substantial Completion. Upgrading software shall include operating system. Upgrade shall include new or revised licenses for use of software.

1. Provide 30 days' notice to Owner to allow scheduling and access to system and to allow Owner to upgrade computer equipment if necessary.

PART 2 - PRODUCTS

2.1 UTP CABLE

A. Manufacturers: Subject to compliance with requirements, provide products by one of the following:

1. ADC.
2. Belden Inc.
3. Berk-Tek; a Nexans company.
4. CommScope, Inc.
5. Draka Cableteq USA.
6. General Cable
7. Mohawk; a division of Belden Networking, Inc.

8. Superior Essex Inc.

9. SYSTIMAX Solutions; a CommScope, Inc. brand.

10. 3M Communication Markets Division.

B. Description: 100-ohm, number of pairs shown on drawings, formed into 25-pair binder groups covered with a gray thermoplastic jacket.

1. Comply with ICEA S-90-661 for mechanical properties.

2. Comply with TIA/EIA-568-B.1 for performance specifications.

3. Comply with TIA/EIA-568-B.2, Category 3.

4. Listed and labeled by an NRTL acceptable to authorities having jurisdiction as complying with UL 444 and NFPA 70 for the following types:

a. Communications, Riser Rated: Type CMR; or MPP, CMP, or MPR, complying with UL 1666.

2.2 UTP CABLE HARDWARE

A. Manufacturers: Subject to compliance with requirements, provide products by one of the following:

1. American Technology Systems Industries, Inc.

2. Dynacom Corporation.

3. Hubbell Premise Wiring.

4. KRONE Incorporated.

5. Leviton Voice & Data Division.

6. Molex Premise Networks; a division of Molex, Inc.

7. Nordex/CDT; a subsidiary of Cable Design Technologies.

8. Panduit Corp.

9. Siemon Co. (The).

10. Tyco Electronics/AMP Netconnect; Tyco International Ltd.

B. General Requirements for Cable Connecting Hardware: Comply with TIA/EIA-568-B.2, IDC type, with modules designed for punch-down caps or tools. Cables shall be terminated with connecting hardware of same category or higher.

C. Connecting Blocks: 66-style IDC for Category 5e. Provide blocks for the number of cables terminated on the block, plus 25 percent spare. Integral with connector bodies, including plugs and jacks where indicated. Provide stand-off brackets for each block.

D. Cross-Connect: Modular array of connecting blocks arranged to terminate building cables and permit interconnection between cables.

1. Number of Terminals per Field: One for each conductor in assigned cables.

2.3 OPTICAL FIBER CABLE

A. Manufacturers: Subject to compliance with requirements, provide products by one of the following:

1. Berk-Tek; a Nexans company.
2. CommScope, Inc.
3. Corning Cable Systems.
4. General Cable Technologies Corporation.
5. Mohawk; a division of Belden CDT.
6. Nordex/CDT; a subsidiary of Cable Design Technologies.
7. Optical Connectivity Solutions Division; Emerson Network Power.
8. Superior Essex Inc.
9. SYSTIMAX Solutions; a CommScope Inc. brand.
10. 3M.
11. Tyco Electronics/AMP Netconnect; Tyco International Ltd.

B. Description: Single mode, fiber count as shown on drawings, nonconductive, tight buffer, optical fiber cable.

1. Comply with ICEA S-83-596 for mechanical properties.
2. Comply with TIA/EIA-568-C.x for performance specifications.
3. Comply with TIA/EIA-492-CAAA for detailed specifications.
4. Listed and labeled by an NRTL acceptable to authorities having jurisdiction as complying with UL 444, UL 1651, and NFPA 70 for the following types:

a. Riser Rated, Nonconductive: Type OFNR or OFNP, complying with UL 1666.

5. Maximum Attenuation: 1.0dB/km @ 1310nm and 1550nm.

C. Jacket:

1. Jacket Color: Yellow
2. Cable cordage jacket, fiber, unit, and group color shall be according to TIA/EIA-598-B.
3. Imprinted with fiber count, fiber type, and aggregate length at regular intervals not to exceed 40 inches (1000 mm).

2.4 OPTICAL FIBER CABLE HARDWARE

A. Manufacturers: Subject to compliance with requirements, provide products by one of the following:

1. ADC.
2. American Technology Systems Industries, Inc.
3. Berk-Tek; a Nexans company.
4. Corning Cable Systems.

5. Dynacom Corporation.
6. Hubbell Premise Wiring.
7. Molex Premise Networks; a division of Molex, Inc.
8. Nordex/CDT; a subsidiary of Cable Design Technologies.
9. Optical Connectivity Solutions Division; Emerson Network Power.
10. Siemon Co. (The).

B. Cross-Connects and Patch Panels: Modular panels housing multiple-numbered, duplex cable connectors.

1. Number of Connectors per Field: One for each fiber of cable or cables assigned to field, plus spares and blank positions adequate to suit specified expansion criteria.

C. Patch Cords: Factory-made, dual-fiber cables in 36-inch (900-mm) lengths.

D. Cable Connecting Hardware:

1. Comply with Optical Fiber Connector Intermateability Standards (FOCIS) specifications of TIA/EIA-604-2, TIA/EIA-604-3-A, and TIA/EIA-604-12. Comply with TIA/EIA-568-B.3.
2. Quick-connect, simplex and duplex, Type LC connectors. Insertion loss not more than 0.75 dB.
3. Type SFF connectors may be used in termination racks, panels, and equipment packages.

E. Comply with requirements in Division 26 Section "Grounding and Bonding for Electrical Systems." for grounding conductors and connectors.

F. Comply with ANSI-J-STD-607-A.

2.5 IDENTIFICATION PRODUCTS

A. Comply with TIA/EIA-606-A and UL 969 for a system of labeling materials, including label stocks, laminating adhesives, and inks used by label printers.

2.6 SOURCE QUALITY CONTROL

A. Testing Agency: Engage a qualified testing agency to evaluate cables.

B. Factory test cables on reels according to TIA/EIA-568-B.1.

C. Factory test UTP cables according to TIA/EIA-568-B.2.

D. Factory test multimode optical fiber cables according to TIA/EIA-526-14-A and TIA/EIA-568-B.3.

E. Cable will be considered defective if it does not pass tests and inspections.

F. Prepare test and inspection reports.

PART 3 - EXECUTION

3.1 ENTRANCE FACILITIES

A. Coordinate backbone cabling with the protectors and demarcation point provided by communications service provider.

3.2 WIRING METHODS

A. Wiring Method: Install cables in raceways and cable trays except within consoles, cabinets, desks. Conceal raceway and cables except in unfinished spaces.

1. Install plenum cable in environmental air spaces, including plenum ceilings.
2. Comply with requirements for raceways and boxes specified in Division 26 Section "Raceway and Boxes for Electrical Systems."

B. Wiring Method: Conceal conductors and cables in accessible ceilings, walls, and floors where possible.

C. Wiring within Enclosures: Bundle, lace, and train cables within enclosures. Connect to terminal points with no excess and without exceeding manufacturer's limitations on bending radii. Provide and use lacing bars and distribution spools.

3.3 INSTALLATION OF PATHWAYS

A. Cable Trays: Comply with NEMA VE 2 and TIA/EIA-569-A.

B. Comply with requirements for demarcation point, pathways, cabinets, and racks specified in Division 27 Section "Communications Equipment Room Fittings." Drawings indicate general arrangement of pathways and fittings.

C. Comply with TIA/EIA-569-A for pull-box sizing and length of conduit and number of bends between pull points.

D. Comply with requirements in Division 26 Section "Raceway and Boxes for Electrical Systems" for installation of conduits and wireways.

E. Install manufactured conduit sweeps and long-radius elbows whenever possible.

F. Pathway Installation in Communications Equipment Rooms:

1. Position conduit ends adjacent to a corner on backboard where a single piece of plywood is installed, or in the corner of room where multiple sheets of plywood are installed around perimeter walls of room.
2. Install cable trays to route cables if conduits cannot be located in these positions.

3. Secure conduits to backboard when entering room from overhead.

4. Extend conduits 3 inches (76 mm) above finished floor.

5. Install metal conduits with grounding bushings and connect with grounding conductor to grounding system.

G. Backboards: Install backboards with 96-inch (2440-mm) dimension vertical. Butt adjacent sheets tightly, and form smooth gap-free corners and joints.

3.4 INSTALLATION OF CABLES

A. Comply with NECA 1.

B. General Requirements for Cabling:

1. Comply with TIA/EIA-568-B.1.

2. Comply with BICSI ITSIM, Ch. 6, "Cable Termination Practices."

3. Install 110-style IDC termination hardware unless otherwise indicated.

4. Terminate all conductors; no cable shall contain unterminated elements. Make terminations only at indicated outlets, terminals, cross-connects, and patch panels.

5. Cables may not be spliced. Secure and support cables at intervals not exceeding 30 inches (760 mm) and not more than 6 inches (150 mm) from cabinets, boxes, fittings, outlets, racks, frames, and terminals.

6. Install lacing bars to restrain cables, to prevent straining connections, and to prevent bending cables to smaller radii than minimums recommended by manufacturer.

7. Bundle, lace, and train conductors to terminal points without exceeding manufacturer's limitations on bending radii, but not less than radii specified in BICSI ITSIM, "Cabling Termination Practices" Chapter. Use lacing bars and distribution spools.

8. Do not install bruised, kinked, scored, deformed, or abraded cable. Do not splice cable between termination, tap, or junction points. Remove and discard cable if damaged during installation and replace it with new cable.

9. Cold-Weather Installation: Bring cable to room temperature before dereeling. Heat lamps shall not be used for heating.

10. In the communications equipment room, install a 10-foot- (3-m-) long service loop on each end of cable.

11. Pulling Cable: Comply with BICSI ITSIM, Ch. 4, "Pulling Cable." Monitor cable pull tensions.

C. Optical Fiber Cable Installation:

1. Comply with TIA/EIA-568-B.3.

2. Cable may be terminated on connecting hardware that is rack or cabinet mounted.

D. Open-Cable Installation:

1. Install cabling with horizontal and vertical cable guides in telecommunications spaces with terminating hardware and interconnection equipment.

E. Group connecting hardware for cables into separate logical fields.

3.5 FIRESTOPPING

A. Comply with requirements in Division 07 Section "Firestopping."

B. Comply with TIA/EIA-569-A, Annex A, "Firestopping."

C. Comply with BICSI TDMM, "Firestopping Systems" Article.

3.6 GROUNDING

A. Install grounding according to BICSI TDMM, "Grounding, Bonding, and Electrical Protection" Chapter.

B. Comply with ANSI-J-STD-607-A.

C. Locate grounding bus bar to minimize the length of bonding conductors. Fasten to wall allowing at least 2-inch (50-mm) clearance behind the grounding bus bar. Connect grounding bus bar with a minimum No. 4 AWG grounding electrode conductor from grounding bus bar to suitable electrical building ground.

D. Bond metallic equipment to the grounding bus bar, using not smaller than No. 6 AWG equipment grounding conductor.

3.7 IDENTIFICATION

A. Identify system components, wiring, and cabling complying with TIA/EIA-606-A. Comply with requirements for identification specified in Division 26 Section "Identification for Electrical Systems."

1. Administration Class: 1.

2. Color-code cross-connect fields and apply colors to voice and data service backboards, connections, covers, and labels.

B. Comply with requirements in Division 09 Section "Interior Painting" for painting backboards.

C. Comply with requirements in Division 27 Section "Communications Horizontal Cabling" for cable and asset management software.

D. Cable Schedule: Install in a prominent location in each equipment room and wiring closet. List incoming and outgoing cables and their designations, origins, and destinations. Protect with rigid frame and clear plastic cover. Furnish an electronic copy of final comprehensive schedules for Project.

E. Cabling Administration Drawings: Show building floor plans with cabling administration-point labeling. Identify labeling convention and show labels for telecommunications closets, backbone pathways and cables, terminal hardware and positions, horizontal cables, work areas and workstation terminal positions, grounding buses and pathways, and equipment grounding conductors.

F. Cable and Wire Identification:

1. Label each cable within 4 inches (100 mm) of each termination and tap, where it is accessible in a cabinet or junction or outlet box, and elsewhere as indicated.

2. Each wire connected to building-mounted devices is not required to be numbered at device if color of wire is consistent with associated wire connected and numbered within panel or cabinet.

3. Exposed Cables and Cables in Cable Trays and Wire Troughs: Label each cable at intervals not exceeding 15 feet (4.5 m).

4. Label each terminal strip and screw terminal in each cabinet, rack, or panel.

a. Individually number wiring conductors connected to terminal strips and identify each cable or wiring group being extended from a panel or cabinet to a building-mounted device with name and number of particular device as shown.
b. Label each unit and field within distribution racks and frames.

5. Identification within Connector Fields in Equipment Rooms and Wiring Closets: Label each connector and each discrete unit of cable-terminating and connecting hardware. Where similar jacks and plugs are used for both voice and data communication cabling, use a different color for jacks and plugs of each service.

G. Labels shall be preprinted or computer-printed type with printing area and font color that contrasts with cable jacket color but still complies with requirements in TIA/EIA 606-A, for the following:

1. Cables use flexible vinyl or polyester that flexes as cables are bent.

3.8 FIELD QUALITY CONTROL

A. Testing Agency: Engage a qualified testing agency to perform tests and inspections.

B. Perform tests and inspections.

C. Tests and Inspections:

1. Visually inspect UTP and optical fiber jacket materials for NRTL certification markings. Inspect cabling terminations in communications equipment rooms for compliance with color-coding for pin assignments, and inspect cabling connections for compliance with TIA/EIA-568-B.1.

2. Visually inspect cable placement, cable termination, grounding and bonding, equipment and patch cords, and labeling of all components.

3. Test UTP copper cabling for DC loop resistance, shorts, opens, intermittent faults, and polarity between conductors. Test operation of shorting bars in connection blocks. Test cables after termination but not cross-connection.

   a. Test instruments shall meet or exceed applicable requirements in TIA/EIA-568-B.2. Perform tests with a tester that complies with performance requirements in "Test Instruments (Normative)" Annex, complying with measurement accuracy specified in "Measurement Accuracy (Informative)" Annex. Use only test cords and adapters that are qualified by test equipment manufacturer for channel or link test configuration.

4. Optical Fiber Cable Tests:

   a. Test instruments shall meet or exceed applicable requirements in TIA/EIA-568-B.1. Use only test cords and adapters that are qualified by test equipment manufacturer for channel or link test configuration.
   b. Link End-to-End Attenuation Tests:

      1) Horizontal and multimode backbone link measurements: Test at 850 or 1300 nm in 1 direction according to TIA/EIA-526-14-A, Method B, One Reference Jumper.
      2) Attenuation test results for backbone links shall be less than 2.0 dB. Attenuation test results shall be less than that calculated according to equation in TIA/EIA-568-B.1.

D. Data for each measurement shall be documented. Data for submittals shall be printed in a summary report that is formatted similar to Table 10.1 in BICSI TDMM, or transferred from the instrument to the computer, saved as text files, and printed and submitted.

E. Remove and replace cabling where test results indicate that they do not comply with specified requirements.

F. End-to-end cabling will be considered defective if it does not pass tests and inspections.

G. Prepare test and inspection reports.

END OF SECTION 27 13 00

SECTION 27 14 00 - COMMUNICATIONS OUTSIDE PLANT CABLING

PART 1 - GENERAL

1.1 RELATED DOCUMENTS

A. Drawings and general provisions of the Contract, including General and Supplementary Conditions, Division 01 Specification Sections and Division 26 Sections, apply to this Section.

1.2 SUMMARY

A. Section Includes:

1. Copper cabling.
2. Optical fiber air-blown cabling.
3. Cable connecting hardware, closures, splicing.
4. Cabling identification products.

1.3 DEFINITIONS

A. Unless otherwise specified or indicated, electrical and electronics terms used in this specification shall be as defined in TIA-568-C.1 ANSI/TIA/EIA-568-B.2-2, TIA-568-C.3TIA-569-B, TIA/EIA-606-A, and IEEE 100 and herein.

B. BICSI: Building Industry Consulting Service International.

C. IDC: Insulation displacement connector.

D. RCDD: Registered Communications Distribution Designer.

E. RUS: U.S. DEPARTMENT OF AGRICULTURE (USDA)

F. UTP: Unshielded twisted pair.

1.4 OUTSIDE CABLING DESCRIPTION

A. The communications outside plant consists of cable, conduit, manholes, etc. required to provide signal paths, including backboards, interconnecting hardware, terminating cables, lightning and surge protection modules at the entrance facility. Provide testing, interconnecting hardware and lightning and surge protection necessary to form a complete and operational outside plant telecommunications system.

1.5 ACTION SUBMITTALS

A. Shop Drawings:

1. Include wiring diagrams and installation details of equipment indicating proposed location, layout and arrangement, control panels, accessories, piping, ductwork, and other items that must be shown to ensure a coordinated installation. Wiring diagrams shall identify circuit terminals and indicate the internal wiring for each item of equipment and the interconnection between each item of equipment. Drawings shall indicate adequate clearance for operation, maintenance, and replacement of operating equipment devices. Submittals shall include the nameplate data, size, and capacity.

2. Provide shop drawings that show the physical and logical connections from the perspective of an entire campus, such as actual building locations, exterior pathways and campus backbone cabling on plan view drawings, major system nodes, and related connections on the logical system drawings in accordance with TIA/EIA-606-A. Drawings shall include wiring and schematic diagrams for fiber optic and copper cabling and splices, copper conductor gauge and pair count, fiber pair count and type, pathway duct and air-blown tube arrangement, associated construction materials, and any details required to demonstrate that cable system has been coordinated and will properly support the switching and transmission system identified in specification and drawings. Provide Registered Communications Distribution Designer (RCDD) approved drawings of the telecommunications outside plant.

1.6 INFORMATIONAL SUBMITTALS

A. Qualification Data: For Installer, qualified layout technician, installation supervisor, and field inspector.

B. Source quality-control reports.

C. Field quality-control reports.

D. Maintenance Data: For splices and connectors to include in maintenance manuals.

1.7 CLOSEOUT SUBMITTALS

A. Provide drawings including documentation on cables and termination hardware in accordance with TIA/EIA-606-A. Drawings shall include schedules to show information for cut-overs and cable plant management, patch panel layouts, cross-connect information and connecting terminal layout as a minimum. Drawings shall be provided in hard copy format. Provide the following drawing documentation as a minimum:

1. Cables - A record of installed cable shall be provided in accordance with TIA/EIA-606-A. The cable records shall include the required data fields for each cable and complete end-to-end circuit report for each complete circuit from the assigned outlet to the entry

facility in accordance with TIA/EIA-606-A. Include manufacture date of cable with submittal.

2. Termination Hardware - Provide a record of installed patch panels, cross-connect points, campus distributor and terminating block arrangements and type in accordance with TIA/EIA-606-A. Documentation shall include the required data fields as a minimum in accordance with TIA/EIA-606-A.
3. Extra Materials: Furnish extra materials that match products installed and that are packaged with protective covering for storage and identified with labels describing contents.
4. Protector Modules: 10 of each type.

1.8 QUALITY ASSURANCE

A. Installer Qualifications: Work under this section shall be performed by and the equipment shall be provided by the approved communications contractor and key personnel. Qualifications shall be provided for the communications system contractor, the communications system installer, the supervisor (if different from the installer), and the cable splicing and terminating personnel. A minimum of 30 days prior to installation, submit documentation of the experience of the communications contractor and of the key personnel.

1. Provide key personnel who are regularly and professionally engaged in the business of the application, installation and testing of the specified telecommunications systems and equipment. There may be one key person or more key persons proposed for this solicitation depending upon how many of the key roles each has successfully provided. Each of the key personnel shall demonstrate experience in providing successful communications systems within the past 3 years.
2. Cable splicing and terminating personnel assigned to the installation of this system or any of its components shall have training in the proper techniques and have a minimum of 3 years experience in splicing and terminating the specified cables. Modular splices shall be performed by factory certified personnel or under direct supervision of factory trained personnel for products used.
3. Supervisors and installers assigned to the installation of this system or any of its components shall have factory or factory approved certification from each equipment manufacturer indicating that they are qualified to install and test the provided products.

B. Layout Responsibility: Preparation of Shop Drawings, Cabling Administration Drawings, and field testing program development by an RCDD.

C. Installation Supervision: Installation shall be under the direct supervision of Registered Technician, who shall be present at all times when Work of this Section is performed at Project site.

D. Testing Supervisor: Currently certified by BICSI as an RCDD to supervise on-site testing.

E. Testing Agency Qualifications: An NRTL.

1. Testing Agency's Field Supervisor: Currently certified by BICSI as an RCDD to supervise on-site testing.

2. Prepare and provide a complete and detailed test plan for field tests of the outside plant including a complete list of test equipment for the copper conductor and optical fiber cables, components, and accessories for approval by the Contracting Officer. Include a cut-over plan with procedures and schedules for relocation of facility station numbers without interrupting service to any active location, 30 days prior to work. Provide outside plant testing and performance measurement criteria in accordance with TIA-568-C.1 and RUS Bull 1753F-201. Include procedures for certification, validation, and testing that includes fiber optic link performance criteria.

F. Electrical Components, Devices, and Accessories: Listed and labeled as defined in NFPA 70, by a qualified testing agency, and marked for intended location and application.

1.9 PROJECT CONDITIONS

A. Environmental Limitations: Do not deliver or install cables and connecting materials until wet work in spaces is complete and dry, and temporary HVAC system is operating and maintaining ambient temperature and humidity conditions at occupancy levels during the remainder of the construction period.

1.10 COORDINATION

A. Coordinate layout and installation of telecommunications pathways and cabling with Owner's telecommunications and LAN equipment and service suppliers.

PART 2 - PRODUCTS

2.1 PATHWAYS

A. General Requirements: Comply with TIA/EIA-569-A and Division 26 Section "Raceway and Boxes for Electrical Systems".

2.2 COPPER CABLES

A. Manufacturers: Subject to compliance with requirements, provide products by one of the following:

1. Belden CDT Inc.; Electronics Division.
2. CommScope, Inc.
3. KRONE Incorporated.
4. Nordex/CDT; a subsidiary of Cable Design Technologies.
5. Superior Essex Inc.
6. 3M.
7. Tyco Electronics/AMP Netconnect; Tyco International Ltd.

B. Description: Solid copper conductors, covered with an extruded solid insulating compound. Insulated conductors shall be twisted into pairs which are then stranded or oscillated to form a cylindrical core. Cable core shall be separated into compartments for improved high frequency performance. Cable shall be completed by the application of a suitable core wrapping material, a corrugated copper or plastic coated aluminum shield, and an overall extruded jacket. Conductors shall be 22 gauge.

C. Provide filled cable meeting the requirements of ICEA S-99-689 and RUS 1755.890.

2.3 OPTICAL FIBER CABLE

A. Optical fiber media shall meet all performance requirements of TIA-568-C.1, TIA-568-C.3 and the physical requirements of ICEA S-87-640 and TIA/EIA-598.

B. Provide single mode fiber media with outer sheath jacket, strength member, ripcords, water blocking material, core tube, and core fibers as installed in a permanent underground pathway system as shown on the construction drawings. Media shall have all glass, dual window, graded index material. Coat fiber with a cladding material which is concentric with the core. Fiber cladding diameter shall be nominal 125 microns. Media shall have a transmission window centered at 1300 and 1550 nanometer wavelengths, attenuation at 1550 nanometers shall be less than 0.5 dB per kilometer. Fiber optic media shall comply with TIA/EIA-472DAAA,and TIA-758.

C. Central Core Member. Material of the central core member shall be non-metallic.

D. Single-Mode (SM) fiber shall be the equivalent graded index optical glass. Core diameter of the fiber shall be approximately 8.7 micrometer. Cladding diameter shall be 125 plus or minus 3 micrometer.

E. Loose Tube Buffering: Surround color-code coated fibers with a loose tube buffering for protection from external mechanical and environmental influences. Fill interior of the tube with a suitable gel-fitting compound to prevent water migration. Color code loose tube buffering for the tube identification. Material of the buffering tube shall be PVC.

2.4 COPPER CABLE CLOSURES

A. Provide closure suitable to house a straight splice, butt, and branch splice in a protective housing into which can be poured an encapsulating compound. Closure shall be of suitable thermoplastic, thermoset, or stainless steel material supplying structural strength necessary to pass the mechanical and electrical requirements in a vault or manhole environment. Encapsulating compound shall be reenterable and shall not alter the chemical stability of the closure. Provide filled splice cases in accordance with RUS Bull 345-72.

B. Provide multipair, foldback or in-line splices of a moisture resistant, two or three wire insulation displacement connector held rigidly in place to assure maximum continuity in accordance with RUS Bull 1753F-401. Cables greater than 25 pairs shall be spliced using multipair splicing connectors, which accommodate 25 pairs of conductors at a time. Provide correct connector size to accommodate the cable gauge of the supplied cable.

C. Provide splice connectors with a polycarbonate body and cap and a tin-plated brass contact element. Connector shall accommodate 22 to 26 AWG solid wire with a maximum insulation diameter of 0.065 inch. Fill connector with sealant grease to make a moisture resistant connection, in accordance with RUS Bull 1753F-401.

2.5 FIBER OPTIC CLOSURES

A. In Vault or Manhole: Provide underground closure suitable to house splice organizer in a protective housing into which can be poured an encapsulating compound. Closure shall be of thermoplastic, thermoset, or stainless steel material supplying structural strength necessary to pass the mechanical and electrical requirements in a vault or manhole environment. Encapsulating compound shall be reenterable and shall not alter the chemical stability of the closure.

B. Provide fiber optic cable splices and splicing materials for fusion methods. The splice insertion loss shall be 0.3 dB maximum when measured in accordance with TIA-455-78-B using an Optical Time Domain Reflectometer (OTDR). Splices shall be designed for a return loss of 40.0 db max for single mode fiber when tested in accordance with TIA-455-107A. Physically protect each fiber optic splice by a splice kit specially designed for the splice.

C. Provide splice organizer suitable for housing fiber optic splices in a neat and orderly fashion. Splice organizer shall allow for a minimum of 3 feet of fiber for each fiber within the cable to be neatly stored without kinks or twists. Splice organizer shall accommodate individual strain relief for each splice and allow for future maintenance or modification, without damage to the cable or splices. Provide splice organizer hardware, such as splice trays, protective glass shelves, and shield bond connectors in a splice organizer kit.

2.6 BUILDING PROTECTORS

A. Provide self-contained 5 pin unit supplied with a field cable stub factory connected to protector socket blocks to terminate and accept protector modules for each pair of outside cable. Building protector assembly shall have interconnecting hardware for connection to interior cabling at full capacity. Provide manufacturer’s instructions for building protector assembly installation.

B. Provide in accordance with UL 497 three-electrode gas tube or solid state type 5 pin rated for the application. Provide gas tube protection modules in accordance with RUS Bull 345-83 and shall be maximum duty, A>20kA, B>1000, C>200A where A is the maximum single impulse discharge current, B is the impulse life and C is the AC discharge current in accordance with ANSI C62.61. The gas modules shall shunt high voltage to ground, fail short, and be equipped

with an external spark gap and heat coils in accordance with UL 497. Provide the number of surge protection modules equal to the number of pairs of exterior cable of the building protector assembly.

C. All cables and conductors, except fiber optic cable, which serve as communication lines through off-premise lines, shall have surge protection installed at each end which meet the requirements of RUS Bull 1751F-815.

2.7 GROUNDING

A. Comply with requirements in Division 26 Section "Grounding and Bonding for Electrical Systems." for grounding conductors and connectors.

B. Comply with ANSI-J-STD-607-A.

C. Provide grounding braid that provides low electrical impedance connections for dependable shield bonding in accordance with RUS 1755.200. Braid shall be made from flat tin-plated copper.

2.8 IDENTIFICATION PRODUCTS

A. Comply with TIA/EIA-606-A and UL 969 for a system of labeling materials, including label stocks, laminating adhesives, and inks used by label printers.

B. Provide tags for each telecommunications cable or wire located in manholes, handholes, and vaults. Cable tags shall be polyethylene and labeled in accordance with TIA/EIA-606-A. Handwritten labeling is unacceptable.

C. Provide tags of polyethylene that have an average tensile strength of 3250 pounds per square inch and that are 0.08 inch thick (minimum), non-corrosive non-conductive; resistive to acids, alkalis, organic solvents, and salt water; and distortion resistant to 170 degrees F. Provide 0.05 inch (minimum) thick black polyethylene tag holder. Provide a one-piece nylon, self-locking tie at each end of the cable tag. The cable tags shall have black block letters, numbers, and symbols one inch high on a yellow background. Letters, numbers, and symbols shall not fall off or change positions regardless of the cable tags' orientation.

2.9 SOURCE QUALITY CONTROL

A. Testing Agency: Engage a qualified testing agency to evaluate cables.

B. Factory test cables on reels according to TIA/EIA-568-B.1.

C. Factory test UTP cables according to TIA/EIA-568-B.2.

D. Factory test multimode optical fiber cables according to TIA/EIA-526-14-A and TIA/EIA-568-B.3.

E. Cable will be considered defective if it does not pass tests and inspections.

F. Prepare test and inspection reports.

2.10 COMMUNICATIONS CABINET (152 Water Street):

The enclosure shall be a 50”H x 30” W x 20” D lockable single door NEMA 4X rated enclosure designed for exterior concrete pad installation with an integral mounting plinth. It shall be constructed of aluminum with a slanted top, separate solar shield and finished with polyester powder paint. The cabinet shall have continuously welded seams ground smooth. All fasteners and hardware shall be stainless steel type 304/316.

1. The cabinet interior will be insulated on the top and sides.
2. The cabinet door shall use a three point latching mechanism with padlockable handle, have a wind latch mechanism and include a seamless foamed in place gasket
3. The cabinet door shall be equipped with a tamper switch similar to a Sentrol model number 30141.
4. The cabinet interior base shall have three pyramidal flexible boots for sealing various cable sizes.
5. The cabinet shall have an interior ground bus bar.
6. The cabinet interior shall include internally mounted rack angles adjustable for 19 or 23 inch spacing without modifications.
7. The cabinet will be equipped with an 1500W -120VAC integral heater.
8. The cabinet shall be provided complete with all accessories, back panels, hardware, wire or fiber management devices, equipment chassis or other devices required for the complete installation of the equipment to be installed.
9. The cabinet shall be similar to a Hoffman T503020FTTX fiber optic cabinet.

PART 3 - EXECUTION

3.1 INSTALLATION

3.2 Install all system components and appurtenances in accordance with manufacturer's instructions IEEE C2, NFPA 70, and as indicated. Provide all necessary interconnections, services, and adjustments required for a complete and operable telecommunications system.

3.3 INSTALLATION OF CABLES

A. End Caps: Cable ends shall be sealed at all times with coated heat shrinkable end caps.

1. Cables ends shall be sealed when the cable is delivered to the job site, while the cable is stored and during installation of the cable.

2. Caps shall remain in place until the cable is spliced or terminated.

3. Sealing compounds and tape are not acceptable substitutes for heat shrinkable end caps.

B. Cable Pulling:

1. Test duct lines with a mandrel and swab out to remove foreign material before the pulling of cables.

2. Avoid damage to cables in setting up pulling apparatus or in placing tools or hardware.

3. Under no circumstances shall the cable be paid off from the bottom of a reel. Use a cable feeder guide of suitable dimensions between cable reel and face of duct to protect cable and guide cable into the duct as it is paid off the reel. As cable is paid off the reel, lubricate and inspect cable for sheath defects.

4. Provide cable lubricants recommended by the cable manufacturer.

5. Do not bend cable and wire in a radius less than 10 times the outside diameter of the cable or wire.

6. Cable Tensions: Obtain from the cable manufacturer the maximum allowable pulling tension. This tension shall not be exceeded.

7. Pulling Eyes:

a. Equip cables 1.25 inches in diameter and larger with cable manufacturer's factory installed pulling-in eyes.

b. Provide cables with diameter smaller than 1.25 inches with heat shrinkable type end caps or seals on cable ends when using cable pulling grips.

c. Rings to prevent grip from slipping shall not be beaten into the cable sheath.

d. Use a swivel of 3/4 inch links between pulling-in eyes or grips and pulling strand.

C. Installation of Cables in Manholes, Handholes, and Vaults:

1. Do not install cables utilizing the shortest route, but route along those walls providing the longest route and the maximum spare cable lengths.

2. Form cables to closely parallel walls, not to interfere with duct entrances, and support cables on brackets and cable insulators at a maximum of 4 feet.

3. In existing manholes, handholes, and vaults where new ducts are to be terminated, or where new cables are to be installed, modify the existing installation of cables, cable supports, and grounding as required with cables arranged and supported as specified for new cables.

4. Identify each cable with corrosion-resistant embossed metal tags.

D. Cable Splicing

1. Conductor Splices: Perform splicing in accordance with requirements of RUS Bull 1753F-401

2. Fiber Optic Splices: Fiber optic splicing shall be in accordance with manufacturer's recommendation and shall exhibit an insertion loss not greater than 0.2 dB for fusion splices.

3.4 GROUNDING

A. Provide grounding and bonding in accordance with RUS 1755.200, TIA J-STD-607-A<, IEEE C2, and NFPA 70. Ground exposed noncurrent carrying metallic parts of telephone equipment, cable sheaths, cable splices, and terminals.

B. Protection assemblies: Mount protector assemblies directly on the telecommunications backboard. Connect assemblies mounted on each vertical frame with No. 6 AWG copper conductor to provide a low resistance path to TMGB.

3.5 CUT-OVER

A. All necessary transfers and cut-overs, shall be accomplished by the telecommunications contractor.

3.6 IDENTIFICATION

A. Identify system components, wiring, and cabling complying with TIA/EIA-606-A. Comply with requirements for identification specified in Division 26 Section "Identification for Electrical Systems."

1. Administration Class: 3

2. Color-code cross-connect fields and apply colors to voice and data service backboards, connections, covers, and labels.

B. Comply with requirements in Division 09 Section "Interior Painting" for painting backboards. For fire-resistant plywood, do not paint over manufacturer's label.

C. Paint and label colors for equipment identification shall comply with TIA/EIA-606-A for Class 3 level of administration including optional identification requirements of this standard.

3.7 FIELD QUALITY CONTROL

A. Testing Agency: Engage a qualified testing agency to perform tests and inspections.

B. Pre-Installation Tests

1. Perform the following tests on cable at the job site before it is removed from the cable reel. For cables with factory installed pulling eyes, these tests shall be performed at the factory and certified test results shall accompany the cable.

2. Perform capacitance tests on at least 10 percent of the pairs within a cable to determine if cable capacitance is within the limits specified.

3. Perform DC-loop resistance on at least 10 percent of the pairs within a cable to determine if DC-loop resistance is within the manufacturer's calculated resistance.

C. Tests and Inspections:

1. Perform acceptance testing in accordance with RUS Bull 1753F-201 and as further specified in this section.

   a. Provide personnel, equipment, instrumentation, and supplies necessary to perform required testing.

   b. Provide test plan to CTDOT PM before proceeding with testing. Test plans shall define the tests required to ensure that the system meets technical, operational, and performance specifications. The test plans shall define milestones for the tests, equipment, personnel, facilities, and supplies required. The test plans shall identify the capabilities and functions to be tested.

   c. Provide test reports in booklet form showing all field tests performed, upon completion and testing of the installed system. Measurements shall be tabulated on a pair by pair or strand by strand basis.

2. Copper Conductor Cable: Perform the following acceptance tests in accordance with TIA-758-A

   1) Wire map (pin to pin continuity)

   2) Continuity to remote end

   3) Crossed pairs

   4) Reversed pairs

   5) Split pairs

   6) Shorts between two or more conductors

3. Fiber Optic Cable:

   a. Test fiber optic cable in accordance with TIA/EIA-455-B and as further specified in this section.

      1) Two optical tests shall be performed on all optical fibers: Optical Time Domain Reflectometry (OTDR) Test, and Attenuation Test.

      2) These tests shall be performed on the completed end-to-end spans which include the near-end pre-connectorized single fiber cable assembly, outside plant as specified, and the far-end pre-connectorized single fiber cable assembly.

   b. OTDR Test: The OTDR test shall be used to determine the adequacy of the cable installations by showing any irregularities, such as discontinuities, micro-bendings or improper splices for the cable span under test.

1) Hard copy fiber signature records shall be obtained from the OTDR for each fiber in each span and shall be included in the test results. The OTDR test shall be measured in both directions.

2) A reference length of fiber, 66 feet minimum, used as the delay line shall be placed before the new end connector and after the far end patch panel connectors for inspection of connector signature. Conduct OTDR test and provide calculation or interpretation of results in accordance with TIA-526-7 for single-mode fiber and TIA-526-14-A for multimode fiber. Splice losses shall not exceed 0.3 db.

c. Attenuation Test: End-to-end attenuation measurements shall be made on all fibers, in both directions, using a 850, 1300, 1310, 1550 nanometer light source at one end and the optical power meter on the other end to verify that the cable system attenuation requirements are met in accordance with TIA-455-46A for multimode and TIA-526-7 for single-mode fiber optic cables.

1) The measurement method shall be in accordance with TIA-455-78-B. Attenuation losses shall not exceed 0.5 db/km at 1310 nm and 1550 nm for single-mode fiber.

2) Attenuation losses shall not exceed 5.0 db/km at 850 nm and 1.5 db/km at 1300 nm for multimode fiber.

D. Data for each measurement shall be documented. Data for submittals shall be printed in a summary report that is formatted similar to Table 10.1 in BICSI TDMM, or transferred from the instrument to the computer, saved as text files, and printed and submitted.

E. Remove and replace cabling where test results indicate that they do not comply with specified requirements.

F. End-to-end cabling will be considered defective if it does not pass tests and inspections.

G. Prepare test and inspection reports.

END OF SECTION 27 14 00

SECTION 27 15 00 - COMMUNICATIONS HORIZONTAL CABLING

PART 1 - GENERAL

1.1 RELATED DOCUMENTS

A. Drawings and general provisions of the Trade Contract, including General and Supplementary Conditions Division 01 Specification Sections, and Division 26 Sections apply to this Section.

1.2 SUMMARY

A. Section Includes:

1. UTP cabling.
2. Cable connecting hardware, patch panels, and cross-connects.
3. Telecommunications outlet/connectors.
4. Cabling system identification products.
5. Cable management system.

B. Related Requirements:

1. Division 28 Section "Conductors and Cables for Electronic Safety and Security" for voice and data cabling associated with system panels and devices.

1.3 DEFINITIONS

A. BICSI: Building Industry Consulting Service International.

B. Consolidation Point: A location for interconnection between horizontal cables extending from building pathways and horizontal cables extending into furniture pathways.

C. Cross-Connect: A facility enabling the termination of cable elements and their interconnection or cross-connection.

D. EMI: Electromagnetic interference.

E. IDC: Insulation displacement connector.

F. LAN: Local area network.

G. Outlet/Connectors: A connecting device in the work area on which horizontal cable or outlet cable terminates.

H. RCDD: Registered Communications Distribution Designer.

I. UTP: Unshielded twisted pair.

1.4 ADMINISTRATIVE REQUIREMENTS

A. Coordinate layout and installation of telecommunications cabling with MNR IT, Owner's telecommunications and LAN equipment and service suppliers.

B. Coordinate telecommunications outlet/connector locations with location of power receptacles at each work area.

1.5 ACTION SUBMITTALS

A. Product Data: For each type of product.

B. Shop Drawings:

1. System Labeling Schedules: Electronic copy of labeling schedules, in software and format selected by Owner.
2. System Labeling Schedules: Electronic copy of labeling schedules that are part of the cabling and asset identification system of the software.
3. Cabling administration drawings and printouts.
4. Wiring diagrams to show typical wiring schematics, including the following:
   a. Cross-connects.
   b. Patch panels.
   c. Patch cords.
5. Cross-connects and patch panels. Detail mounting assemblies, and show elevations and physical relationship between the installed components.

1.6 INFORMATIONAL SUBMITTALS

A. Qualification Data: For Installer, qualified layout technician, installation supervisor, and field inspector.

B. Source quality-control reports.

C. Field quality-control reports.

1.7 CLOSEOUT SUBMITTALS

A. Maintenance Data: For splices and connectors to include in maintenance manuals.

B. Software and Firmware Operational Documentation:

1. Software operating and upgrade manuals.
2. Program Software Backup: On magnetic media or compact disk, complete with data files.
3. Device address list.

4. Printout of software application and graphic screens.

1.8 MAINTENANCE MATERIAL SUBMITTALS

A. Furnish extra materials that match products installed and that are packaged with protective covering for storage and identified with labels describing contents.

1. Patch-Panel Units: One of each type.

2. Connecting Blocks: One of each type.

3. Device Plates: One of each type.

1.9 QUALITY ASSURANCE

A. Installer Qualifications: Cabling Installer must have personnel certified by BICSI on staff.

1. Layout Responsibility: Preparation of Shop Drawings, Cabling Administration Drawings, and field testing program development by an RCDD.

2. Installation Supervision: Installation shall be under the direct supervision of Registered Technician, who shall be present at all times when Work of this Section is performed at Project site.

3. Testing Supervisor: Currently certified by BICSI as an RCDD to supervise on-site testing.

B. Testing Agency Qualifications: An NRTL.

1. Testing Agency's Field Supervisor: Currently certified by BICSI as an RCDD to supervise on-site testing.

1.10 DELIVERY, STORAGE, AND HANDLING

A. Test cables upon receipt at Project site.

B. Test each pair of UTP cable for open and short circuits.

PART 2 - PRODUCTS

2.1 HORIZONTAL CABLING DESCRIPTION

A. Horizontal cable and its connecting hardware provide the means of transporting signals between the telecommunications outlet/connector and the horizontal cross-connect located in the communications equipment room. This cabling and its connecting hardware are called a "permanent link," a term that is used in the testing protocols.

1. TIA/EIA-568-B.1 requires that a minimum of two telecommunications outlet/connectors be installed for each work area.

2. Horizontal cabling shall contain no more than one transition point or consolidation point between the horizontal cross-connect and the telecommunications outlet/connector.

3. Bridged taps and splices shall not be installed in the horizontal cabling.

4. Splitters shall not be installed as part of the optical fiber cabling.

B. A work area is approximately 100 sq. ft. (9.3 sq. m), and includes the components that extend from the telecommunications outlet/connectors to the station equipment.

C. The maximum allowable horizontal cable length is 295 feet (90 m). This maximum allowable length does not include an allowance for the length of 16 feet (4.9 m) to the workstation equipment or in the horizontal cross-connect.

2.2 PERFORMANCE REQUIREMENTS

A. General Performance: Horizontal cabling system shall comply with transmission standards in TIA/EIA-568-B.1 when tested according to test procedures of this standard.

B. Surface-Burning Characteristics: Comply with ASTM E 84; testing by a qualified testing agency. Identify products with appropriate markings of applicable testing agency.

1. Flame-Spread Index: 25 or less.

2. Smoke-Developed Index: 50 or less.

C. Electrical Components, Devices, and Accessories: Listed and labeled as defined in NFPA 70, by a qualified testing agency, and marked for intended location and application.

D. Grounding: Comply with J-STD-607-A.

2.3 BACKBOARDS

A. Backboards: Plywood, 3/4 by 48 by 96 inches (19 by 1220 by 2440 mm). Comply with requirements in Division 06 Section "Rough Carpentry" for plywood backing panels.

2.4 UTP CABLE

A. Manufacturers: Subject to compliance with requirements, available manufacturers offering products that may be incorporated into the Work include, but are not limited to, the following:
1. SYSTIMAX Solutions; a CommScope, Inc. brand.

B. Description: Interior installation, 100-ohm, four-pair UTP:

1. Jacket: Blue thermoplastic

2. Comply with ICEA S-90-661 for mechanical properties.

3. Comply with TIA/EIA-568-B.1 for performance specifications.

4. Comply with TIA/EIA-568-B.2, Category 6.

5. Listed and labeled by an NRTL acceptable to authorities having jurisdiction as complying with UL 444 and NFPA 70 for the following types:
   a. Communications, Plenum Rated: Type CMP, complying with NFPA 262.

C. Description: Under slab and in slab installation, 100-ohm, four-pair UTP:

1. Jacket: Polyethlyne Jacket, Black
2. Fill: Dry water block compound
3. Shield: Unshielded.

D. Basis of design: Commscope GigaSPEED

2.5 UTP CABLE HARDWARE

A. Manufacturers: Subject to compliance with requirements, available manufacturers offering products that may be incorporated into the Work include, but are not limited to, the following:

1. ADC.
2. Belden Inc.
3. Hubbell Premise Wiring.
4. Leviton Commercial Networks Division.
5. Molex Premise Networks; a division of Molex, Inc.
6. Panduit Corp.
7. Siemon Co. (The).
8. Tyco Electronics Corporation; AMP Products.

B. General Requirements for Cable Connecting Hardware: Comply with TIA/EIA-568-B.2, IDC type, with modules designed for punch-down caps or tools. Cables shall be terminated with connecting hardware of same category or higher.

C. Connecting Blocks: See 27 13 00, Communications Backbone Cabling.

D. Cross-Connect: Modular array of connecting blocks arranged to terminate building cables and permit interconnection between cables.

1. Number of Terminals per Field: One for each conductor in assigned cables.

E. Patch Panel: Modular panels housing multiple-numbered jack units with IDC-type connectors at each jack for permanent termination of pair groups of installed cables.

1. Number of Jacks per Field: One for each four-pair UTP cable.

F. Jacks and Jack Assemblies: Modular, color-coded, eight-position modular receptacle units with integral IDC-type terminals.

2.6 TELECOMMUNICATIONS OUTLET/CONNECTORS

A. Jacks: 100-ohm, balanced, twisted-pair connector; four-pair, eight-position modular. Comply with TIA/EIA-568-B.1.

B. Workstation Outlets: Number of port connector assemblies shown on drawings mounted in single faceplate.

1. Metal Faceplate: Stainless steel complying with requirements in Division 26 Section "Wiring Devices."

2. For use with snap-in jacks accommodating any combination of UTP, optical fiber, and coaxial work area cords.

3. Legend: Snap-in, clear-label covers and machine-printed paper inserts.

4. Color code jacks as follows:
   a. DATA #1 – Green
   b. DATA #2 – Yellow
   c. VOICE #1 – Ivory
   d. VOICE #2 – Ivory

5. Wall Telephone Outlets:
   a. Metal Faceplate: Stainless steel complying with requirements in Division 26 Section "Wiring Devices."
   b. For use with snap-in jacks accommodating any combination of UTP.
   c. Mounting studs for wall mounted telephone.

C. Wiring Configuration: 568B

2.7 GROUNDING

A. Comply with requirements in Division 26 Section "Grounding and Bonding for Electrical Systems" for grounding conductors and connectors.

B. Comply with J-STD-607-A.

2.8 J HOOKS

A. Galvanized steel with spring clip retainer.

B. Size for 2x installed cable bundle, minimum 1”.

2.9 “D” RINGS

A. Provide D Rings or Bridle rings for cable management on all backboards.

B. Minimum 2” Diameter.

C. Maximum spacing shall be 24”.

D. Provide rings between each row of connector blocks, on side of connector blocks, bottom & top of connector blocks.

2.10 IDENTIFICATION PRODUCTS

A. Comply with TIA/EIA-606-A and UL 969 for labeling materials, including label stocks, laminating adhesives, and inks used by label printers.

B. Comply with requirements in Division 26 Section "Identification for Electrical Systems."

2.11 CABLE MANAGEMENT SYSTEM

A. Manufacturers: Subject to compliance with requirements, provide products by one of the following:

1. iTRACS Corporation, Inc.
2. TelSoft Solutions.

B. Description: Computer-based cable management system, with integrated database and graphic capabilities.

C. Document physical characteristics by recording the network, TIA/EIA details, and connections between equipment and cable.

D. Information shall be presented in database view, schematic plans, or technical drawings.

1. Microsoft Visio Professional drawing software shall be used as drawing and schematic plans software.

E. System shall interface with the following testing and recording devices:

1. Direct upload tests from circuit testing instrument into the personal computer.
2. Direct download circuit labeling into labeling printer.

2.12 SOURCE QUALITY CONTROL

A. Testing Agency: Engage a qualified testing agency to evaluate cables.

B. Factory test UTP cables according to TIA/EIA-568-B.2.

C. Factory test multimode optical fiber cables according to TIA-526-14-A and TIA/EIA-568-B.3.

D. Factory-sweep test coaxial cables at frequencies from 5 MHz to 1 GHz. Sweep test shall test the frequency response, or attenuation over frequency, of a cable by generating a voltage whose frequency is varied through the specified frequency range and graphing the results.

E. Cable will be considered defective if it does not pass tests and inspections.

F. Prepare test and inspection reports.

PART 3 - EXECUTION

3.1 ENTRANCE FACILITIES

A. Coordinate backbone cabling with the protectors and demarcation point provided by communications service provider.

3.2 WIRING METHODS

A. Install cables in pathways and cable trays except within consoles, cabinets, desks, and counters and except in accessible ceiling spaces and in gypsum board partitions where unenclosed wiring method may be used. Conceal pathways and cables except in unfinished spaces.

1. Install plenum cable in all spaces.
2. Comply with requirements in Division 26 Section "Raceway and Boxes for Electrical Systems."
3. Comply with requirements in Division 27 Section "Cable Trays for Communications Systems."

B. Conceal conductors and cables in accessible ceilings, walls, and floors where possible.

C. Wiring within Enclosures:

1. Bundle, lace, and train conductors to terminal points with no excess and without exceeding manufacturer's limitations on bending radii.
2. Install lacing bars and distribution spools.
3. Install conductors parallel with or at right angles to sides and back of enclosure.

3.3 INSTALLATION OF CABLES

A. Comply with NECA 1.

B. General Requirements for Cabling:

1. Comply with TIA/EIA-568-B.1.
2. Comply with BICSI ITSIM, Ch. 6, "Cable Termination Practices."
3. Install 110-style IDC termination hardware unless otherwise indicated.
4. Consolidation points may be used only for making a direct connection to telecommunications outlet/connectors:

    a. Do not use consolidation point as a cross-connect point, as a patch connection, or for direct connection to workstation equipment.
    b. Locate consolidation points for UTP at least 49 feet (15 m) from communications equipment room.

5. Terminate conductors; no cable shall contain unterminated elements. Make terminations only at indicated outlets, terminals, cross-connects, and patch panels.

6. Cables may not be spliced. Secure and support cables at intervals not exceeding 30 inches (760 mm) and not more than 6 inches (150 mm) from cabinets, boxes, fittings, outlets, racks, frames, and terminals.

7. Install lacing bars to restrain cables, to prevent straining connections, and to prevent bending cables to smaller radii than minimums recommended by manufacturer.

8. Bundle, lace, and train conductors to terminal points without exceeding manufacturer's limitations on bending radii, but not less than radii specified in BICSI ITSIM, "Cabling Termination Practices" Chapter. Install lacing bars and distribution spools.

9. Do not install bruised, kinked, scored, deformed, or abraded cable. Do not splice cable between termination, tap, or junction points. Remove and discard cable if damaged during installation and replace it with new cable.

10. Cold-Weather Installation: Bring cable to room temperature before dereeling. Heat lamps shall not be used for heating.

11. In the communications equipment room, install a 10-foot- (3-m-) long service loop on each end of cable.

12. Pulling Cable: Comply with BICSI ITSIM, Ch. 4, "Pulling Cable." Monitor cable pull tensions.

C. UTP Cable Installation:

1. Comply with TIA/EIA-568-B.2.

2. Do not untwist UTP cables more than 1/2 inch (12 mm) from the point of termination to maintain cable geometry.

D. Open-Cable Installation:

1. Install cabling with horizontal and vertical cable guides in telecommunications spaces with terminating hardware and interconnection equipment.

2. Suspend UTP cable not in a wireway or pathway a minimum of 8 inches (200 mm) above ceilings by cable supports not more than 48 inches **(1524 mm)** apart.

3. Cable shall not be run through structural members or in contact with pipes, ducts, or other potentially damaging items.

4. Cable is exposed areas shall be in conduit.

E. Group connecting hardware for cables into separate logical fields.

F. Separation from EMI Sources:

1. Comply with BICSI TDMM and TIA-569-B for separating unshielded copper voice and data communication cable from potential EMI sources, including electrical power lines and equipment.

2. Separation between open communications cables or cables in nonmetallic raceways and unshielded power conductors and electrical equipment shall be as follows:

a. Electrical Equipment Rating Less Than 2 kVA: A minimum of 5 inches (127 mm).

3. Separation between communications cables in grounded metallic raceways and unshielded power lines or electrical equipment shall be as follows:

a. Electrical Equipment Rating Less Than 2 kVA: A minimum of 2-1/2 inches (64 mm).

4. Separation between communications cables in grounded metallic raceways and power lines and electrical equipment located in grounded metallic conduits or enclosures shall be as follows:

a. Electrical Equipment Rating Less Than 2 kVA: No requirement.

5. Separation between Communications Cables and Electrical Motors and Transformers, 5 kVA or HP and Larger: A minimum of 48 inches (1200 mm).

6. Separation between Communications Cables and Fluorescent Fixtures: A minimum of 5 inches (127 mm).

3.4 FIRESTOPPING

A. Comply with requirements in Division 07 Section "Firestopping."

B. Comply with TIA-569-B, Annex A, "Firestopping."

C. Comply with BICSI TDMM, "Firestopping Systems" Article.

3.5 GROUNDING

A. Install grounding according to BICSI TDMM, "Grounding, Bonding, and Electrical Protection" Chapter.

B. Comply with J-STD-607-A.

C. Locate grounding bus bar to minimize the length of bonding conductors. Fasten to wall allowing at least 2-inch (50-mm) clearance behind the grounding bus bar. Connect grounding bus bar with a minimum No. 4 AWG grounding electrode conductor from grounding bus bar to suitable electrical building ground.

D. Bond metallic equipment to the grounding bus bar, using not smaller than No. 6 AWG equipment grounding conductor.

3.6 IDENTIFICATION

A. Identify system components, wiring, and cabling complying with TIA/EIA-606-A. Comply with requirements for identification specified in Division 26 Section "Identification for Electrical Systems."

1. Administration Class: 1.

2. Color-code cross-connect fields. Apply colors to voice and data service backboards, connections, covers, and labels.

B. Using cable management system software specified in Part 2, develop Cabling Administration Drawings for system identification, testing, and management. Use unique, alphanumeric designation for each cable and label cable, jacks, connectors, and terminals to which it connects with same designation. At completion, cable and asset management software shall reflect as-built conditions.

C. Comply with requirements in Division 09 Section "Painting and Coating" for painting backboards. For fire-resistant plywood, do not paint over manufacturer's label.

D. Cable Schedule: Post in prominent location in each equipment room and wiring closet. List incoming and outgoing cables and their designations, origins, and destinations. Protect with rigid frame and clear plastic cover. Furnish an electronic copy of final comprehensive schedules for Project.

E. Cabling Administration Drawings: Show building floor plans with cabling administration-point labeling. Identify labeling convention and show labels for telecommunications closets, terminal hardware and positions, horizontal cables, work areas and workstation terminal positions, grounding buses and pathways, and equipment grounding conductors. Follow convention of TIA/EIA-606-A. Furnish electronic record of all drawings, in software and format selected by Owner.

F. Cable and Wire Identification:

1. Label each cable within 4 inches (100 mm) of each termination and tap, where it is accessible in a cabinet or junction or outlet box, and elsewhere as indicated.

2. Each wire connected to building-mounted devices is not required to be numbered at device if color of wire is consistent with associated wire connected and numbered within panel or cabinet.

3. Exposed Cables and Cables in Cable Trays and Wire Troughs: Label each cable at intervals not exceeding 15 feet (4.5 m).

4. Label each terminal strip and screw terminal in each cabinet, rack, or panel.

   a. Individually number wiring conductors connected to terminal strips, and identify each cable or wiring group being extended from a panel or cabinet to a building-mounted device shall be identified with name and number of particular device as shown.
   b. Label each unit and field within distribution racks and frames.

5. Identification within Connector Fields in Equipment Rooms and Wiring Closets: Label each connector and each discrete unit of cable-terminating and connecting hardware. Where similar jacks and plugs are used for both voice and data communication cabling, use a different color for jacks and plugs of each service.

6. Uniquely identify and label work area cables extending from the MUTOA to the work area. These cables may not exceed the length stated on the MUTOA label.

G. Labels shall be preprinted or computer-printed type with printing area and font color that contrasts with cable jacket color but still complies with requirements in TIA/EIA-606-A.

1. Cables use flexible vinyl or polyester that flex as cables are bent.

3.7 FIELD QUALITY CONTROL

A. Testing Agency: Engage a qualified testing agency to perform tests and inspections.

B. Manufacturer's Field Service: Engage a factory-authorized service representative to test and inspect components, assemblies, and equipment installations, including connections.

C. Perform the following tests and inspections:

1. Visually inspect UTP and optical fiber cable jacket materials for NRTL certification markings. Inspect cabling terminations in communications equipment rooms for compliance with color-coding for pin assignments, and inspect cabling connections for compliance with TIA/EIA-568-B.1.

2. Visually confirm Category 6, marking of outlets, cover plates, outlet/connectors, and patch panels.

3. Visually inspect cable placement, cable termination, grounding and bonding, equipment and patch cords, and labeling of all components.

4. Test UTP backbone copper cabling for DC loop resistance, shorts, opens, intermittent faults, and polarity between conductors. Test operation of shorting bars in connection blocks. Test cables after termination but not cross-connection.

a. Test instruments shall meet or exceed applicable requirements in TIA/EIA-568-B.2. Perform tests with a tester that complies with performance requirements in "Test Instruments (Normative)" Annex, complying with measurement accuracy specified in "Measurement Accuracy (Informative)" Annex. Use only test cords and adapters that are qualified by test equipment manufacturer for channel or link test configuration.

5. UTP Performance Tests:

a. Test for each outlet and MUTOA. Perform the following tests according to TIA/EIA-568-B.1 and TIA/EIA-568-B.2:

1) Wire map.
2) Length (physical vs. electrical, and length requirements).
3) Insertion loss.
4) Near-end crosstalk (NEXT) loss.
5) Power sum near-end crosstalk (PSNEXT) loss.
6) Equal-level far-end crosstalk (ELFEXT).
7) Power sum equal-level far-end crosstalk (PSELFEXT).
8) Return loss.
9) Propagation delay.
10) Delay skew.

6. Final Verification Tests: Perform verification tests for UTP systems after the complete communications cabling and workstation outlet/connectors are installed.

   a. Voice Tests: These tests assume that dial tone service has been installed. Connect to the network interface device at the demarcation point. Go off-hook and listen and receive a dial tone. If a test number is available, make and receive a local, long distance, and digital subscription line telephone call.
   b. Data Tests: These tests assume the Information Technology Staff has a network installed and is available to assist with testing. Connect to the network interface device at the demarcation point. Log onto the network to ensure proper connection to the network.

D. Document data for each measurement. Data for submittals shall be printed in a summary report that is formatted similar to Table 10.1 in BICSI TDMM, or transferred from the instrument to the computer, saved as text files, and printed and submitted.

E. End-to-end cabling will be considered defective if it does not pass tests and inspections.

F. Prepare test and inspection reports.

3.8 SOFTWARE SERVICE AGREEMENT

A. Technical Support: Beginning with Substantial Completion, provide software support for **two** years.

B. Upgrade Service: Update software to latest version at Project completion. Install and program software upgrades that become available within **two** years from date of Substantial Completion. Upgrading software shall include operating system. Upgrade shall include new or revised licenses for use of software.

   1. Provide 30 days' notice to Owner to allow scheduling and access to system and to allow Owner to upgrade computer equipment if necessary.

END OF SECTION 27 15 00

SECTION 27 51 16 - PUBLIC ADDRESS SYSTEM

PART 1 - GENERAL

1.1 RELATED DOCUMENTS

A. Drawings and general provisions of the Trade Contract, including General and Supplementary Conditions, Division 01 Specification Sections, and Division 26 Sections apply to this Section.

1.2 SUMMARY

A. Section Includes:

1. Power amplifiers.
2. Telephone paging adapters.
3. Loudspeakers.
4. Conductors and cables.
5. Raceways.

1.3 DEFINITIONS

A. Channels: Separate parallel signal paths, from sources to loudspeakers or loudspeaker zones, with separate amplification and switching that permit selection between paths for speaker alternative program signals.

B. VU: Volume unit.

C. Zone: Separate group of loudspeakers and associated supply wiring that may be arranged for selective switching between different channels.

1.4 PERFORMANCE REQUIREMENTS

A. Delegated Design: Design supports and seismic restraints for control consoles, equipment cabinets and racks, and components, including comprehensive engineering analysis by a qualified professional engineer, using performance requirements and design criteria indicated.

B. Seismic Performance: Supports and seismic restraints for control consoles, equipment cabinets and racks, and components shall withstand the effects of earthquake motions determined according to SEI/ASCE 7.

1. The term "withstand" means "the unit will remain in place without separation of any parts from the device when subjected to the seismic forces specified."

1.5 ACTION SUBMITTALS

A. Product Data: For each type of product indicated.

B. Shop Drawings: For supports and seismic restraints for control consoles, equipment cabinets and racks, and components. Include plans, elevations, sections, details, and attachments to other work.

1. Detail equipment assemblies and indicate dimensions, weights, required clearances, method of field assembly, components, and location and size of each field connection.

2. Calculations: For sizing backup battery.

3. Wiring Diagrams: For power, signal, and control wiring.

a. Identify terminals to facilitate installation, operation, and maintenance.
b. Single-line diagram showing interconnection of components.
c. Cabling diagram showing cable routing.

C. Delegated-Design Submittal: For supports and seismic restraints for control consoles, equipment cabinets and racks, and components indicated to comply with performance requirements and design criteria, including analysis data signed and sealed by the qualified professional engineer responsible for their preparation.

1. Detail fabrication and assembly of supports and seismic restraints for control consoles, equipment cabinets and racks, and components.

1.6 INFORMATIONAL SUBMITTALS

A. Coordination Drawings: Reflected ceiling plans, drawn to scale, on which ceiling-mounted items including lighting fixtures, diffusers, grilles, speakers, sprinklers, access panels, and special moldings are shown and coordinated with each other, using input from installers of the items involved.

B. Qualification Data: For qualified Installer.

C. Seismic Qualification Certificates: For control consoles, equipment cabinets and racks, accessories, and components, from manufacturer.

1. Basis for Certification: Indicate whether withstand certification is based on actual test of assembled components or on calculation.

2. Detailed description of equipment anchorage devices on which the certification is based and their installation requirements.

D. Field quality-control reports.

1.7 CLOSEOUT SUBMITTALS

A. Operation and Maintenance Data: For public address and mass notification systems to include in emergency, operation, and maintenance manuals.

1.8 MAINTENANCE MATERIAL SUBMITTALS

A. Furnish extra materials that match products installed and that are packaged with protective covering for storage and identified with labels describing contents.

1. Speaker: One – ceiling mounted speaker assembly (including brackets, boxes and supports), one – wall mounted speaker assembly.

1.9 QUALITY ASSURANCE

A. Installer Qualifications: Manufacturer's authorized representative who is trained and approved for installation of units required for this Project.

1. Personnel certified by NICET as Audio Systems Level II Technician.

B. Source Limitations: Obtain public address and mass notification systems from single source from single manufacturer.

C. Electrical Components, Devices, and Accessories: Listed and labeled as defined in NFPA 70, by a qualified testing agency, and marked for intended location and application.

D. Comply with NFPA 70.

1.10 COORDINATION

A. Coordinate layout and installation of system components and suspension system with other construction that penetrates ceilings or is supported by them, including light fixtures, HVAC equipment, fire-suppression system, and partition assemblies.

PART 2 - PRODUCTS

2.1 MANUFACTURERS

A. Manufacturers: Subject to compliance with requirements, available manufacturers offering products that may be incorporated into the Work include, but are not limited to, the following:

1. Alpha Communications.
2. Atlas Sound LP.
3. Bogen Communications, Inc.
4. Edwards Signaling & Security Systems; part of GE Infrastructure, Security.
5. Electro-Voice; Telex Communications, Inc.
6. Federal Signal Corporation; Electrical Products Division.
7. Peavey Electronics.
8. Rauland-Borg Corporation.

2.2 FUNCTIONAL DESCRIPTION OF SYSTEM

A. System Functions:

1. Input: Telephone analog line from campus telephone switch.
2. Zone selection: DTMF for each zone and all call.
3. Number of Zones: 3
4. Channels: 1

2.3 GENERAL EQUIPMENT AND MATERIAL REQUIREMENTS

A. Compatibility of Components: Coordinate component features to form an integrated system. Match components and interconnections for optimum performance of specified functions.

B. Equipment: Comply with UL 813. Equipment shall be modular, using solid-state components, and fully rated for continuous duty unless otherwise indicated. Select equipment for normal operation on input power usually supplied at 110 to 130 V, 60 Hz.

C. Equipment Mounting: Wall mounted on backboards. Provide “D” rings to manage cables.

D. Weather-Resistant Equipment: Listed and labeled by a qualified testing agency for duty outdoors or in damp locations.

2.4 PAGING ADAPTER:

A. Input: POTS line from campus telephone switch.

B. Zones: 3 + all call

C. Paging: one way

D. Mounting: Wall

E. Power Supply: 120VAC, provide low voltage adapter as required.

F. Basis of design: Bogen ZPM3

2.5 POWER AMPLIFIERS

A. Mounting: Wall.

B. Output Power: 70-V balanced line. 100Watts

C. Total Harmonic Distortion: Less than 3 percent at rated power output from 50 to 12,000 Hz.

D. Bases of design: Bogen TPU series.

2.6 LOUDSPEAKERS

A. Cone-Type Loudspeakers:

1. Minimum Axial Sensitivity: 91 dB at one meter, with 1-W input.
2. Frequency Response: Within plus or minus 3 dB from 50 to 15,000 Hz.
3. Size: 8 inches (200 mm) with 1-inch (25-mm) voice coil and minimum 5-oz. (140-g) ceramic magnet.
4. Minimum Dispersion Angle: 100 degrees.
5. Rated Output Level: 10 W.
6. Matching Transformer: Full-power rated with four taps. Maximum insertion loss of 0.5 dB.
7. Surface-Mounting Units: Ceiling, wall, or pendant mounting, as indicated, in steel back boxes, acoustically dampened. Front face of at least 0.0478-inch (1.2-mm) steel and whole assembly rust proofed and shop primed for field painting.
8. Flush-Ceiling-Mounting Units: In steel back boxes, acoustically dampened. Metal ceiling grille with white baked enamel.

B. Horn-Type Loudspeakers:

1. Type: Single-horn units, double-reentrant design, with minimum full-range power rating of 15 W.
2. Matching Transformer: Full-power rated with four standard taps. Maximum insertion loss of 0.5 dB.
3. Frequency Response: Within plus or minus 3 dB from 400 to 12,000 Hz.
4. Dispersion Angle: 70 degrees.
5. Mounting: Integral bracket.

2.7 CONDUCTORS AND CABLES

A. Jacketed, twisted pair and twisted multipair, untinned solid copper.

1. Insulation for Wire in Conduit: Thermoplastic, not less than 1/32 inch (0.8 mm) thick.
2. Microphone Cables: Neoprene jacketed, not less than 2/64 inch (0.8 mm) thick, over shield with filled interstices. Shield No. 34 AWG, tinned, soft-copper strands formed into a braid or approved equivalent foil. Shielding coverage on conductors is not less than 60 percent.
3. Plenum Cable: Listed and labeled for plenum installation.
4. Minimum wire size shall be #18 AWG, copper.

2.8 RACEWAYS

A. Conduit and Boxes: Comply with Division 26 Section "Raceway and Boxes for Electrical Systems."

1. Outlet boxes shall be not less than 2 inches (50 mm) wide, 3 inches (75 mm) high, and 2-1/2 inches (64 mm) deep.

PART 3 - EXECUTION

3.1 WIRING METHODS

A. Wiring Method: Install cables in raceways and cable trays except within consoles, cabinets, desks, and counters, and except in accessible ceiling spaces and in gypsum board partitions where unenclosed wiring method may be used. Conceal raceway and cables except in unfinished spaces.

1. Install plenum cable in environmental air spaces, including plenum ceilings.
2. Comply with requirements for raceways and boxes specified in Division 26 Section "Raceway and Boxes for Electrical Systems."

B. Wiring Method: Conceal conductors and cables in accessible ceilings, walls, and floors where possible.

C. Wiring within Enclosures: Bundle, lace, and train cables to terminal points with no excess and without exceeding manufacturer's limitations on bending radii. Provide and use lacing bars and distribution spools.

3.2 INSTALLATION OF RACEWAYS

A. Comply with requirements in Division 26 Section "Raceway and Boxes for Electrical Systems" for installation of conduits and wireways.

B. Install manufactured conduit sweeps and long-radius elbows whenever possible.

3.3 INSTALLATION OF CABLES

A. Comply with NECA 1.

B. General Cable Installation Requirements:

1. Terminate conductors; no cable shall contain unterminated elements. Make terminations only at outlets and terminals.
2. Splices, Taps, and Terminations: Arrange on numbered terminal strips in junction, pull, and outlet boxes; terminal cabinets; and equipment enclosures. Cables may not be spliced.
3. Secure and support cables at intervals not exceeding 30 inches (760 mm) and not more than 6 inches (150 mm) from cabinets, boxes, fittings, outlets, racks, frames, and terminals.
4. Bundle, lace, and train conductors to terminal points without exceeding manufacturer's limitations on bending radii. Install lacing bars and distribution spools.

5. Do not install bruised, kinked, scored, deformed, or abraded cable. Do not splice cable between termination, tap, or junction points. Remove and discard cable if damaged during installation and replace it with new cable.

6. Cold-Weather Installation: Bring cable to room temperature before dereeling. Heat lamps shall not be used.

C. Open-Cable Installation:

1. Install cabling with horizontal and vertical cable guides in telecommunications spaces with terminating hardware and interconnection equipment.

2. Suspend speaker cable not in a wireway or pathway a minimum of 8 inches (200 mm) above ceiling by cable supports not more than 60 inches (1524 mm)> apart.

3. Cable shall not be run through structural members or be in contact with pipes, ducts, or other potentially damaging items.

4. Cables in exposed areas shall be in conduit.

D. Separation of Wires: Separate speaker-microphone, line-level, speaker-level, and power wiring runs. Install in separate raceways or, where exposed or in same enclosure, separate conductors at least 12 inches (300 mm) apart for speaker microphones and adjacent parallel power and telephone wiring. Separate other intercommunication equipment conductors as recommended by equipment manufacturer.

3.4 INSTALLATION

A. Match input and output impedances and signal levels at signal interfaces. Provide matching networks where required.

B. Identification of Conductors and Cables: Color-code conductors and apply wire and cable marking tape to designate wires and cables so they identify media in coordination with system wiring diagrams.

C. Conductor Sizing: Unless otherwise indicated, size speaker circuit conductors from racks to loudspeaker outlets not smaller than No. 18 AWG and conductors from microphone receptacles to amplifiers not smaller than No. 22 AWG.

D. Weatherproof Equipment: For units that are mounted outdoors, in damp locations, or where exposed to weather, install consistent with requirements of weatherproof rating.

E. Speaker-Line Matching Transformer Connections: Make initial connections using tap settings indicated on Drawings.

F. Connect wiring according to Division 26 Section "Low-Voltage Electrical Power Conductors and Cables."

3.5 GROUNDING

A. Ground cable shields and equipment to eliminate shock hazard and to minimize ground loops, common-mode returns, noise pickup, cross talk, and other impairments.

B. Signal Ground Terminal: Locate at main equipment cabinet. Isolate from power system and equipment grounding.

C. Install grounding electrodes as specified in Division 26 Section "Grounding and Bonding for Electrical Systems."

3.6 FIELD QUALITY CONTROL

A. Testing Agency: Engage a qualified testing agency to perform tests and inspections.

B. Manufacturer's Field Service: Engage a factory-authorized service representative to inspect, test, and adjust components, assemblies, and equipment installations, including connections.

C. Perform tests and inspections.

1. Manufacturer's Field Service: Engage a factory-authorized service representative to inspect components, assemblies, and equipment installations, including connections, and to assist in testing.

D. Tests and Inspections:

1. Schedule tests with at least seven days' advance notice of test performance.
2. After installing public address and mass notification systems and after electrical circuitry has been energized, test for compliance with requirements.
3. Operational Test: Perform tests that include originating program and page messages at microphone outlets, preamplifier program inputs, and other inputs. Verify proper routing and volume levels and that system is free of noise and distortion.
4. Acoustic Coverage Test: Feed pink noise into system using octaves centered at 500 and 4000 Hz. Use sound-level meter with octave-band filters to measure level at five locations in each zone. Maximum permissible variation in level is plus or minus 6 dB between two speakers.

E. Inspection: Verify that units and controls are properly labeled and interconnecting wires and terminals are identified. Prepare a list of final tap settings of paging speaker-line matching transformers.

F. Public address and mass notification systems will be considered defective if they do not pass tests and inspections.

G. Prepare test and inspection reports.

1. Include a record of final speaker-line matching transformer-tap settings, and signal ground-resistance measurement certified by Installer.

3.7 STARTUP SERVICE

A. Perform startup service.

1. Verify that electrical wiring installation complies with manufacturer's submittal and installation requirements.

2. Complete installation and startup checks according to manufacturer's written instructions.

3.8 ADJUSTING

A. On-Site Assistance: Engage a factory-authorized service representative to provide on-site assistance in adjusting sound levels, resetting transformer taps, and adjusting controls to meet occupancy conditions.

B. Occupancy Adjustments: When requested within 12 months of date of Substantial Completion, provide on-site assistance in adjusting system to suit actual occupied conditions. Provide up to two visits to Project during other-than-normal occupancy hours for this purpose.

3.9 DEMONSTRATION

A. Train Owner's maintenance personnel to adjust, operate, and maintain the public address and mass notification systems and equipment.

END OF SECTION 27 51 16

SECTION 27 51 23 - INTERCOM SYSTEMS

PART 1 - GENERAL

1.1 RELATED DOCUMENTS

A. Drawings and general provisions of the Trade Contract, including General and Supplementary Conditions, Division 01 Specification Sections, and Division 26 Sections apply to this Section.

1.2 SUMMARY

A. Section Includes: Microprocessor-switched intercommunications and program systems with the following components:

1. Master stations.
2. Speaker-microphone stations.
3. Call-switch unit.
4. Intercommunication amplifier.
5. Conductors and cables.
6. Raceways.

1.3 ACTION SUBMITTALS

A. Product Data: For each type of product indicated.

B. Shop Drawings: For intercommunications and program systems. Include plans, elevations, sections, details, and attachments to other work.

1. Detail equipment assemblies and indicate dimensions, weights, required clearances, method of field assembly, components, and location and size of each field connection.
2. Include scaled drawings for master station that detail built-in equipment.
3. Wiring Diagrams: For power, signal, and control wiring.

a. Identify terminals to facilitate installation, operation, and maintenance.
b. Single-line diagram showing interconnection of components.
c. Cabling diagram showing cable routing.

1.4 INFORMATIONAL SUBMITTALS

A. Qualification Data: For qualified Installer and testing agency.

B. Field quality-control reports.

1.5 CLOSEOUT SUBMITTALS

A. Operation and Maintenance Data: For intercommunications and program systems to include in operation and maintenance manuals. In addition to items specified in Division 01 Section "Operation and Maintenance Data," include the following:

1. A record of Owner's equipment-programming option decisions.

1.6 QUALITY ASSURANCE

A. Installer Qualifications: Manufacturer's authorized representative who is trained and approved for installation of units required for this Project.

B. Testing Agency Qualifications: Qualified agency, with the experience and capability to conduct testing indicated.

1. Testing Agency's Field Supervisor: Certified by NICET as Audio Systems Level II Technician.

C. Electrical Components, Devices, and Accessories: Listed and labeled as defined in NFPA 70, by a qualified testing agency, and marked for intended location and application.

D. Comply with NFPA 70.

1.7 COORDINATION

A. Coordinate layout and installation of ceiling-mounted speaker microphones with other construction that penetrates ceilings or is supported by them, including light fixtures, HVAC equipment, fire-suppression system, and partition assemblies.

PART 2 - PRODUCTS

2.1 MANUFACTURERS

A. Manufacturers: Subject to compliance with requirements, provide products by one of the following:

1. Digital Acoustics.

2.2 GENERAL REQUIREMENTS FOR EQUIPMENT AND MATERIALS

A. Coordinate features and select components to form an integrated system. Match components and interconnections for optimum performance of specified functions.

B. Equipment: Modular type using solid-state components, fully rated for continuous duty unless otherwise indicated. Select equipment for normal operation on input power usually supplied at 110 to 130 V, 60 Hz.

C. Weather-Resistant Equipment: Listed and labeled by an NRTL for duty outdoors or in damp locations.

2.3 MASTER STATION

A. Expanding existing workstations with Digital Acoustics TalkMaster software. Upgrade software to manufactures latest version.

2.4 IP INTERFACE

A. Analog to Ethernet converter

B. Provide Digital Acoustics IP-7 singe and dual as required.

2.5 SPEAKER-MICROPHONE STATIONS

A. Mounting: Flush unless otherwise indicated, and suitable for mounting conditions indicated.

B. Faceplate: Stainless steel or anodized aluminum with tamperproof mounting screws.

C. Back Box: Two-gang galvanized steel with 2-1/2-inch (64-mm) minimum depth.

D. Speaker: 3 inches (76 mm), 2.3 oz. (65 g) minimum; permanent magnet.

E. Provide Digital Acoustics CIS-4 Vandal proof station.

2.6 POWER SUPPLY

A. Voltage/Current: 12VDC, 10A

B. Outputs: 8 outputs, provide PTC per output.

C. Battery: 12AH

D. Enclosure: Wall, NEMA 1, hinged door.

E. Provide Altronix AL1012UL series.

2.7 SURGE PROTECTOR

A. Provide surge protectors for all circuits leaving the building. Provide protectors on both ends of each circuit.

B. Terminals: screw type.

C. Provide Ditek LVLP series.

2.8 CONDUCTORS AND CABLES

A. Conductors: Jacketed, twisted pair and twisted multipair, untinned solid copper. Sizes as recommended by system manufacturer, but no smaller than No. 22 AWG.

B. Insulation: Thermoplastic, not less than 1/32 inch (0.8 mm) thick.

C. Shielding: For speaker-microphone leads and elsewhere where recommended by manufacturer; No. 34 AWG, tinned, soft-copper strands formed into a braid or equivalent foil.

1. Minimum Shielding Coverage on Conductors: 60 percent.

D. Plenum Cable: Listed and labeled for plenum installation.

E. Ethernet cabling shall comply with division 27, Communications Horizontal Cabling.

2.9 RACEWAYS

A. Intercommunication and Program System Raceways and Boxes: Comply with requirements in Division 26 Section "Raceway and Boxes for Electrical Systems."

B. Intercommunication and Program System Raceways and Boxes: Metal wireways.

C. Outlet boxes shall be not less than 2 inches (50 mm) wide, 3 inches (75 mm) high, and 2-1/2 inches (64 mm) deep.

D. Flexible metal conduit is prohibited.

PART 3 - EXECUTION

3.1 WIRING METHODS

A. Wiring Method: Install cables in raceways and cable trays except within consoles, cabinets, desks, and counters.

1. Comply with requirements for raceways and boxes specified in Division 26 Section "Raceway and Boxes for Electrical Systems."

B. Wiring within Enclosures: Bundle, lace, and train cables to terminal points with no excess and without exceeding manufacturer's limitations on bending radii. Provide and use lacing bars and distribution spools.

3.2 INSTALLATION OF RACEWAYS

A. Comply with requirements in Division 26 Section "Raceway and Boxes for Electrical Systems" for installation of conduits and wireways.

B. Install manufactured conduit sweeps and long-radius elbows whenever possible.

3.3 INSTALLATION OF CABLES

A. Comply with NECA 1.

B. General Requirements:

1. Terminate conductors; no cable shall contain unterminated elements. Make terminations only at outlets and terminals.

2. Splices, Taps, and Terminations: Arrange on numbered terminal strips in junction, pull, and outlet boxes; terminal cabinets; and equipment enclosures. Cables may not be spliced.

3. Secure and support cables at intervals not exceeding 30 inches (760 mm) and not more than 6 inches (150 mm) from cabinets, boxes, fittings, outlets, racks, frames, and terminals.

4. Bundle, lace, and train conductors to terminal points without exceeding manufacturer's limitations on bending radii. Install lacing bars and distribution spools.

5. Do not install bruised, kinked, scored, deformed, or abraded cable. Do not splice cable between termination, tap, or junction points. Remove and discard cable if damaged during installation and replace it with new cable.

6. Cold-Weather Installation: Bring cable to room temperature before dereeling. Heat lamps shall not be used.

C. Separation of Wires: Separate speaker-microphone, line-level, speaker-level, and power wiring runs. Install in separate raceways or, where exposed or in same enclosure, separate conductors at least 12 inches (300 mm) apart for speaker microphones and adjacent parallel power and telephone wiring. Separate other intercommunication equipment conductors as recommended by equipment manufacturer.

3.4 INSTALLATION

A. Match input and output impedances and signal levels at signal interfaces. Provide matching networks where required.

B. Identification of Conductors and Cables: Color-code conductors and apply wire and cable marking tape to designate wires and cables so they identify media in coordination with system wiring diagrams.

C. Weatherproof Equipment: For units that are mounted outdoors, in damp locations, or where exposed to weather, install consistent with requirements of weatherproof rating.

D. Connect wiring according to Division 26 Section "Low-Voltage Electrical Power Conductors and Cables."

3.5 GROUNDING

A. Ground cable shields and equipment to eliminate shock hazard and to minimize ground loops, common-mode returns, noise pickup, cross talk, and other impairments.

B. Signal Ground Terminal: Locate at main equipment cabinet. Isolate from power system and equipment grounding.

C. Install grounding electrodes as specified in Division 26 Section "Grounding and Bonding for Electrical Systems."

3.6 SYSTEM PROGRAMMING

A. Programming: Fully brief Owner on available programming options. Record Owner's decisions and set up initial system program. Prepare a written record of decisions, implementation methodology, and final results.

3.7 FIELD QUALITY CONTROL

A. Testing Agency: Engage a qualified testing agency to perform tests and inspections.

B. Manufacturer's Field Service: Engage a factory-authorized service representative to inspect, test, and adjust components, assemblies, and equipment installations, including connections.

C. Perform tests and inspections.

1. Manufacturer's Field Service: Engage a factory-authorized service representative to inspect components, assemblies, and equipment installations, including connections, and to assist in testing.

D. Tests and Inspections:

1. Schedule tests with at least seven days' advance notice of test performance.
2. After installing intercommunications and program systems and after electrical circuitry has been energized, test for compliance with requirements.
3. Operational Test: Test originating station-to-station messages at each intercommunication station. Verify proper routing and volume levels and that system is free of noise and distortion. Test each available message path from each station on system.

E. Inspection: Verify that units and controls are properly labeled and interconnecting wires and terminals are identified. Prepare a list of final tap settings of paging speaker-line matching transformers.

F. Intercommunications and program systems will be considered defective if they do not pass tests and inspections.

G. Prepare test and inspection reports.

3.8 STARTUP SERVICE

A. Engage a factory-authorized service representative to perform startup service and initial system programming.

1. Verify that electrical wiring installation complies with manufacturer's submittal and installation requirements.

2. Complete installation and startup checks according to manufacturer's written instructions.

3.9 ADJUSTING

A. On-Site Assistance: Engage a factory-authorized service representative to provide on-site assistance in adjusting sound levels, resetting transformer taps, and adjusting controls to meet occupancy conditions.

B. Occupancy Adjustments: When requested within 12 months of date of Substantial Completion, provide on-site assistance in adjusting system to suit actual occupied conditions. Provide up to two to Project during other-than-normal occupancy hours for this purpose.

END OF SECTION 27 51 23

SECTION 28 01 00 – BASIC SECURITY SYSTEM REQUIREMENTS

PART 1 - GENERAL

1.1 SUMMARY

A. This section includes the following:

1. General Conditions.
2. Qualifications
3. Security Integration (SI)
4. General Programming Requirements
5. Testing and Training

1.2 RELATED SECTIONS

A. Security system requirements described in this Section apply to all the following sections:

1. 28 05 13 - CONDUCTORS AND CABLES FOR ELECTRONIC SAFETY AND SECURITY
2. 28 13 00 - ACCESS CONTROL SYSTEM
3. 28 23 00 - VIDEO SURVEILLANCE SYSTEM
4. 28 51 23 - INTERCOM SYSTEM

B. Division 28 and applicable sections of Division 26 specification sections are interrelated and what is called for by one section shall be deemed as required by the other sections. An individual specification section that lists other specific sections in RELATED SECTIONS is done for the convenience of the reader and is not to be construed as the only related sections.

C. Drawings and general provisions of the Contract, including General and Supplementary Conditions and Division 01 Specification Sections, apply to all sections of Divisions 28.

D. Division 03 - Concrete

E. Division 07 – Thermal and Moisture Protection

F. Division 08 - Openings

G. Division 09 - Finishes

H. Division 14 - Conveying Systems

I. Division 21 – Fire Suppression Systems

J. Division 27 – Communications

K. Division 31 – Earthwork

L. Division 33 - Utilities

1.3 DEFINITIONS

A. Refer to Division 1 for definitions used in the Contract Documents. Some of the following definitions are duplicated from that reference for a specific purpose or are additions applicable to this Division.

1. Provide: Furnish, install and connect.

2. Wiring: Wire or cable installed in conduit with all required boxes, fittings, connectors, etc.

3. Work: Materials completely installed, including the labor involved.

4. Conduit: Rigid galvanized steel conduit (RGSC), electrical metallic tubing (EMT), intermediate metal conduit (IMC), rigid non-metal conduit (RNC), or flexible metal conduit (FMC).

5. Where shown or where indicated: Reference to Drawing(s), item or items.

6. Or equal: Shall mean equivalent as approved by the Architect or Engineer.

7. Construction Manager (CM): Representative of the Owner in design and construction related matters.

1.4 SYSTEM DESCRIPTION

A. The extent of Division 28 work shall be as shown on the Facilities Security Drawings. This Division includes all the security system work except that work specifically designated as being specified or required by other Divisions. Work is to include all labor and material necessary for the complete security system installation and proper operation of all security systems including but not limited to equipment associated with the Electrical, Mechanical Controls and Communications systems.

B. Drawings: The Facilities Security Drawings are diagrammatic in nature except where specific dimensions, or specific details, are shown. Refer to other project drawings for exact locations of equipment, building dimensions, Architectural details and conditions affecting the communications work.

1.5 SUBMITTALS

A. General: Unless otherwise indicated, all submittals shall be made in accordance with requirements as specified herein and in Division 1 Section "Submittal Procedures."

1. Transmit each submittal with the proper Transmittal Form specified in the specification Section, Submittal Procedures.

B. All material lists and shop drawing submittals shall include a stamped or electronically “stamped” indication signifying that the submittals have been previously reviewed for compliance with the Contract Documents, that all coordination required prior to field installation has occurred and that the material being submitted is approved for installation. The stamped indication shall include the name of the Contracting Firm, the date of the review and the signature of the Contractor. The Engineer will not review the shop drawing submittals without the Contractor’s stamped approval on the shop drawings. The Contractor’s responsibility for complying with the Contract Documents shall not be relieved by the Engineer's review and comments. The Engineer's review requires not less than two (2) weeks from date the submittals are received by the Engineer. If more than two submissions are required due to the shop drawings not complying with the specifications, the contractor shall compensate the owner $1000 per instance, until the shop drawings are approved.

C. Submittals for equipment specified in each Section, with the exception of samples, shall be loose-leaf pages, produced as .PDF files, and submitted electronically as a complete package. The submittal may be separated by Group(s) for submission at different times or all at the same time. However, each Group submittal must be 100% complete and submitted at the same time.

1. The Engineer’s submittal comments will be returned to the Contractor electronically on a Submittal Comments form, .PDF file.

2. The Engineer will not receive, review or process hard-copy submittals.

D. The submittal shall be separated by system and tabbed into groups of equipment as follows:

1. Group I - Card Access System Devices:

   a. Card Readers
   b. Controllers
   c. Power Supplies
   d. Surge Protectors
   e. Tamper Switches
   f. Miscellaneous card access system devices
   g. Programming Sheets
   h. Fire Protection Seals, UL Assembly Details

2. Group II - Closed Circuit television System

   a. Cameras
   b. Camera Mounts
   c. Network Video Recorders
   d. Surge Protectors
   e. Miscellaneous closed circuit system devices
   f. Programming sheets
   g. Fire Protection Seals, UL Assembly Details

3. Group III - Intercom System

   a. Master Station
   b. IP Interface
   c. Speaker-Microphone Stations
   d. Software
   e. Surge Protectors
   f. Power Supplies
   g. Programming Sheets
   h. Fire Protection Seals, UL Assembly Details

4. Group IV – Network:

   a. Network Switches
   b. Patch Panels
   c. Patch Cords
   d. Protectors
   e. Programming Sheets

5. Group V – Conductors and Cable:

   a. Conductors and cables
   b. Identification Materials, Equipment, Technique

E. Product Data: Manufacturers technical product literature, including specifications and installation instructions for each component and system as listed in Products, Part 2, of each section.

F. Shop Drawings: Dimensioned drawings and layouts showing location of system components, accessories and secondary systems. Include wiring diagrams, connections and special installation details.

G. Coordination Drawings: Detailed layout drawings showing primary elements, of components and systems of communications equipment and materials in relationship with other building components.

   1. Indicate clearances for servicing and maintaining equipment.

   2. Indicate locations where space is limited and sequencing and coordination will affect efficient installation of the Work.

3. Show location of each device on walls. All devices located in the room, even if not security shall be shown to scale.

H. Quality Control Submittals: Provide the following for record:

1. Test Reports.

2. Certificates.

3. Manufacturers Instructions.

4. Manufacturers Field Reports.

I. Contract Close-out Submittals: Provide loose-leaf pages, produced as .PDF files, and submitted electronically as a complete package. Tab pages to separate each major item or closely related group of items with typed item names on the tabs. Supply a table of contents at the beginning of each volume listing all items, the manufacturers and the name, address and phone number of the nearest authorized service representative. In addition to operation, maintenance and lubrication instructions, the manuals shall include the following:

1. Parts list(s).

2. Security System wiring diagrams.

3. Elementary or schematic wiring diagrams.

J. Programming Sheets: Provide programming sheets for all equipment and devices that is hardware or software configurable in the field. Document all settings, IP addresses to provide a complete record of settings.

K. Project Record Documents: Furnish project record documents in accordance with General Conditions and Division 1. Include marked up as-built drawings indicating proper outlet numbers, conduit homeruns, branch conduit runs, and other such pertinent data. Include the following:

1. "As-built" conduit layout diagrams, including wire color code and/or tag number.

2. Complete "as-built" wiring diagrams.

3. Detailed catalog data on all installed system components.

4. Copy of the test reports described elsewhere.

L. Operation and maintenance data warranty: Provide loose-leaf pages, produced as .PDF files, and furnished electronically as a complete package on compact disc or USB flash drive. Also,

provide three copies at time of Final Completion in accordance with the General Conditions and Division 01. Use multiple binders if a single binder would exceed 2-1/2" in thickness. Arrange the data in the same sequence as the specification Section. Delete or mark through extraneous data. Before final acceptance of work, the Contractor shall deliver the composite "Operating and Shop Maintenance Manual." Each manual shall contain, but not be limited to:

1. A statement of guarantee, including date of termination and name and phone number of the person to be called in event of equipment failure.

2. Individual factory-issued manuals containing all technical information on each piece of equipment installed. In the event such manuals are not obtainable from the factory, it shall be the responsibility of the Contractor to compile and include them. Advertising brochures or operational instructions shall not be used in lieu of the required technical manuals.

1.6 SUBSTITUTIONS

A. Throughout the Specifications, types of material may be specified by manufacturer's name and catalog number in order to establish standards of quality and performance, unless specifically noted to be of one manufacture and part of a system expansion. Where one or more manufacturers are listed for a product, without the words "or equivalent", provide the equipment of one of the manufacturers listed. Where one or more manufacturers are listed followed by the words "or equivalent", provide the product of one of the manufacturers listed, or request a substitution of a product of equal quality, performance and function as specified in Division 01. However, the burden is upon the requester to prove such equivalence. He must request the Engineer's approval (in writing) to substitute such item for the specified item, with supporting data (and samples, if required) to permit a fair evaluation of the proposed substitute with respect to quality, serviceability, warranty and cost.

B. Comply with Division 1, "Product Substitution Procedures" and submit substitution requests on the Contractor's Substitution Request form.

C. When a substitute item is proposed, all costs associated with changes to incorporate the substituted item shall be borne by the Contractor without incurring additions to the Contract. The Engineer reserves the right to be compensated for any extra requested review on the same product.

D. Written acceptance or rejection of a proposed substitution will be conveyed in a timely manner to the Contractor according to Division 1 procedures for Project Consultant's Action.

1.7 QUALITY ASSURANCE

A. Qualifications: Manufacturers shall have minimum five (5) years experience in the manufacture of the indicated products.

B. Regulatory Requirements: All products (including equipment) furnished for the communications installation shall bear the Listing Mark or Classification Marking (label) of UL

where such marking is available or other approved testing agency. Products which are not listed will not be acceptable.

C. The work under Division 28 shall comply with the latest adopted edition and relevant portions of codes and standards from the following list. The most stringent shall apply where a code conflict occurs.

1. Federal Occupational Safety and Health Act.

2. Americans with Disabilities Act (ADA).

3. State of Florida Accessibility Code.

4. State of Florida Building Code.

5. State of Florida Fire Prevention Code.

6. State of Florida Energy Efficiency Code.

7. NFPA-37 Installation and Use of Stationary Combustion Engines and Gas Turbines.

8. NFPA-70 National Electrical Code (NEC), 2008 with local amendments.

9. NFPA-72 National Fire Alarm Code.

10. NFPA-101 Life Safety Code.

D. Where different sections of any of the aforementioned codes and regulations, or the Contract Documents, require different materials, methods of construction or other requirements, the most restrictive shall govern. In any conflict between a general provision and a special provision, the special provision shall govern. In case of differences between the drawings and the specifications, or where the drawings and specifications are not clear, the higher cost alternative shall be included in the contract and the subject shall be referred to the Architect for clarification and instructions.

1.8 DELIVERY STORAGE AND HANDLING

A. Packing and Shipping: All materials shall be packed to prevent damage during shipping. Packing shall include plastic rap and crating. Coordinate shipping of items to the jobsite to prevent exposure to weather. Equipment will not be permitted to be stored outside.

B. Acceptance at Site: Receive delivery of communications equipment and protect from the weather at all times during storage and construction.

C. Storage and Protection: Provide offsite storage of equipment if building is not totally enclosed and ready to accept equipment. Manufacturer's recommendations with regard to storage and protection shall be followed. Should any apparatus be subjected to possible damage by water, it shall be replaced with new apparatus, or at the direction of the Architect, thoroughly dried and put through a dielectric test to ascertain the suitability of the apparatus, or it shall be replaced, in either case without incurring additions to the Contract.

1.9 PROJECT / SITE CONDITIONS

A. Before ordering any equipment, the physical size of all equipment shall be checked to properly fit the allotted spaces shown, and to satisfy all NEC required clearances.

B. Environmental Requirements: Comply with manufacturer’s requirements for environmental conditions during shipping, storage, installation, testing and operation. Maintain manufacturers recommended ambient conditions such as temperature, humidity, altitude, ventilation, etc.

C. Presently located on this project site are an existing parking structure, west and central wing buildings, and centralized energy center. Demolition of these buildings and the parking structure is not included in the Contract Documents.

D. Field Measurements: Measure and confirm field conditions prior to installation of equipment. Notify Construction Manager within 24 hours of any discrepancy or code violations caused by field conditions.

E. The Contractor shall comply with the requirements of MTA Security Sensitive Information Handbook version 3.

1.10 SEQUENCING, SCHEDULING AND COORDINATION

A. Work shall be coordinated to preclude interference between or among the work of different trades and to ensure necessary clearances at crossovers and equipment. Work requiring necessarily fixed locations (e.g., piping with required slopes, lighting fixtures in ceilings, etc.) shall take precedence over work not requiring such fixed locations. Furnish all labor, materials and incidental elements, such as junction and pull boxes, fittings, pull wires, connectors, support materials, fuses, lamps and labels, along with other necessary requirements to install, connect, start-up and result in complete and working systems in accordance with the requirements of the Contract Documents.

B. Provide all wiring, connectors, fittings and all other accessories necessary for the complete installation of, and final connections to, equipment furnished under other Divisions and/or by the Owner where shown. Secure approved shop drawings from all required disciplines and verify final communications characteristics before roughing outlets at any equipment. When communications data on approved shop drawings differs from contemplated design, notify the Construction Manager before proceeding with the installation. Attention is called to the fact that certain features of control, other functions, or systems may be specified in this Division by performance, and as such, all elements of wiring or other materials and devices required for the complete installation may not be shown.

C. Coordinate communications equipment and materials installation with other building components.

D. Arrange for chases, slots, and openings in structural concrete components to allow for passage of communications components or component installations.

E. Coordinate the installation of required supporting devices, boxes, conduit, and sleeves to be set in poured in place concrete and other structural components, as they are constructed.

F. Sequence, coordinate, and integrate installations of communications materials and equipment for efficient flow of the Work. Give particular attention to large equipment requiring positioning prior to closing in the building.

G. Only when the Architect's and/or Structural Engineer's written permission have been previously obtained, may cutting and patching of building components and structural elements to accommodate passage or installation of communications equipment and materials be undertaken.

1.11 SYSTEM INTERGRATION (SI)

A. The contractor for the systems specified here-in in Related Sections shall retain the services of a Security System Integrator (SI) to provide the systems integration services described herein, for the equipment and work required, either by its own firm if approved, or a qualified System Integration firm. The name of the proposed SI shall be submitted to the Authority for approval. Together with adequate information which addresses all the requirements stipulated herein. It shall also include the proposed SI's company profile (number and locations of offices, number and locations of assembly facilities, number of engineers and technicians employed by the SI, default history in the past five years if any, business affiliation, etc.), as well as any other relevant information. MNR may disqualify the Systems Integrator should the integrator's proposed solution, personnel and integration effort to be noncompliant with or deficient to meet the requirements of the Specifications.

B. The Contractor shall provide personnel with the necessary skills and experience. The SI personnel/team shall meet or exceed the following requirements:

1. A minimum of five years of experience in providing comprehensive engineering integration services for large scale, stand alone and network capable CCTV, access control, intercom, and intrusion detection systems.

2. The SI must be able to provide supporting documentation and demonstrate its factory training, experience and knowledge of systems engineering, installation and integration in the following areas:

   a. ANSI, IEEE, IETF, ITU-T, and Telecordia standards for Ethernet and IP
   b. Software/Hardware integration of IP networks
   c. Systems engineering related to IP networks
   d. Cisco Networks
   e. Axis cameras

f. Pelco

g. Lenel Access Control System

h. Digital Acoustics IP Intercom system.

i. Installation standards, Maintenance procedures, Operating, Administration and quality

j. Configuration management and general testing procedure

1.12 PERMITS/LICENSES/FEES

A. Obtain all permits and licenses, and pay all fees as required for execution of the Contract. Arrange for necessary inspections required by the city, county, territory and other authorities having jurisdiction, and present certificates of approval to the Construction Manager.

1.13 WARRANTY

A. All work specified in Division 28 shall be guaranteed to be free from defects in material and workmanship for a period of one year or longer as required from date of final acceptance by the Construction Manager.

B. During this guarantee period, all defects in materials and workmanship shall be corrected without incurring additions to the Contract. The correction shall include all required cutting, patching, repainting, or other work involved, including repair or restoration of any damaged sections or parts of the premises resulting from any fault included in the guarantee. Provisions of previous paragraph 1.10 G. apply.

C. In addition to this general guarantee, present to the Construction Manager any other guarantees or warranties from equipment or system manufacturers. These supplemental guarantees or warranties shall not invalidate the general guarantee.

D. The one-year warranty period shall commence upon system acceptance by the Construction Manager (Owner).

E. In the event that defects in materials or workmanship are encountered during the warranty period, the Contractor shall provide all materials and labor required for prompt and proper correction of such defects at no additional cost to the Owner.

1.14 SPARE PARTS

A. Extra Materials - Spare Parts: As a separate item, a price list for a complete spare parts package shall be included with the shop drawings submittal. Provide a recommended spare parts list for all major pieces of equipment and devices.

1.15 SECURITY PROCEDURES

A. Comply with Metropolitan Transportation Authority, MTA Sensitive Information Handbook for site access forms.

PART 2 - PRODUCTS

2.1 GENERAL MATERIALS AND WORKMANSHIP

A. Materials and apparatus required for the work shall be new, of first-class quality, and shall be furnished, delivered, erected, connected, finished in every detail, and shall be so selected and arranged as to fit properly into the building spaces in compliance with all requirements.

B. Manufacturer's catalog numbers listed are not necessarily complete. Products provided shall be a standard product which has a history of successful installation and operation for a minimum period of two years. Prototype or custom made equipment is not acceptable unless so specified.

C. Manufacturer's instructions shall be obtained and used for the installation of all equipment and devices where such manufacturers' instructions are available.

2.2 PAINTING

A. See specification Division 09 for paint requirements.

PART 3 - EXECUTION

3.1 INSTALLATION

A. Applicable provisions of the latest edition of NECA 1”Standard Practices for Good Workmanship in Electrical Construction, published by the National Electrical Contractors Association (NECA) shall set the standard for installation of materials and equipment and for workmanship. Install all materials in a neat and orderly manner. Cover conduits, boxes, cabinets, and other enclosures with plastic covers or caps to prevent entrance of plaster, concrete, or other debris when work is not being done. Materials and equipment shall be installed using tools and equipment designed for the particular application.

B. Manufacturer's instructions shall be obtained and used for the installation of all equipment and devices where such manufacturer's instructions are available.

3.2 SLEEVES AND BOX-OUTS

A. Comply with the requirements of 26 01 00 Basic Electrical Requirements.

3.3 PAINTING

A. The surface of ungalvanized troughs, metal frames, support racks and plywood backboards, provided under this Section, shall be painted. Clean surfaces completely of all oil, wax, rust and old paint prior to painting. Paint shall be applied to backboards before switches, troughs and devices are installed on them. Paint shall include a primer and two coats of finished paint. Backboards shall be painted with a flame retardant paint. Scratched or marred surfaces of lighting fixtures and other equipment shall be touched-up with paint specifically intended for that purpose, furnished by the equipment manufacturer.

B. Where equipment finish is damaged, touch up by wire brushing clean and applying two coats of rust inhibitive primer and two coats of epoxy enamel to match factory finish.

C. See Division 09 for additional installation requirements.

3.4 EQUIPMENT ACCESS

A. Install equipment so it is readily accessible for maintenance and operation. Provide access doors where required.

3.5 FIELD QUALITY CONTROL

A. Tests and Reports: All systems and equipment shall be extensively tested by the communications contractor prior to final inspection. Each test shall be signed off by the Construction Manager in writing.

B. At the time of the final inspection or at such time as part of the system may be completed, Contractor shall test all communications systems in the presence of the Construction Manager for compliance with the Contract Documents. Furnish all necessary personnel and equipment, such as measuring instruments for current, voltage and resistance, and ladders, two-way radios, lights, etc. to facilitate conducting the tests. Authorized representatives of the manufacturer of specialty equipment or systems shall be present during the tests to demonstrate compliance with the Contract Documents.

C. Perform operational tests on all systems. Every system test report shall be performed according to the manufacturers instruction and shall include the following documentation, which shall be delivered to the Construction Manager upon final acceptance of the system:

1. Summary of Project.

2. A complete list of equipment tested.

3. Description of test.

4. Indication that all equipment is properly installed and functions in conformance with the specifications.

5. Tests results of equipment as applicable.

6. Conclusions and recommendations

7. Appendix, including appropriate test forms.

8. List of test equipment used.

9. Technician's name, certificate number and date.

D. Contractor shall perform all final tests and inspections in the presence of the Construction Manager and to his/her satisfaction. The Contractor shall supply personnel and required auxiliary equipment for all tests.

E. The complete system shall be tested to ensure that it is operating properly.

3.6 TEST INSTRUMENT CALIBRATION

A. Calibrate instruments in accordance with the following frequency schedule:

1. Field Instruments: Analog - 6 months maximum. Digital - 12 months maximum.

2. Laboratory Instruments - 12 months maximum.

3. Leased Specialty Equipment - 12 months.

B. Dated calibration labels shall be visible on all test equipment.

C. Records must be kept up to date which show date and results of instruments calibrated or tested.

D. Maintain an up-to-date instrument calibration instruction procedure.

E. Calibrating standard shall be of a higher accuracy than that of the instrument tested.

3.7 DEMONSTRATION

A. All training shall be scheduled and take place in a location and date agreed upon by the Owner. A course outline of the training program shall be forwarded to the Construction Manager for delivery to the Owner at least three weeks in advance of presentation of each course. All training hours shall take place between the hours of 8:00 AM to 5:00 PM, Monday through Friday.

B. Maintenance Training to be Coordinated With the Construction Manager:

1. During the course of the installation, several persons will be designated by the Owner for receiving maintenance training.

2. The maintenance training courses shall include operation, troubleshooting using both test hardware and diagnostic programs, and failure repair of actual system hardware. Servicing personnel shall receive detailed instructions in principles of operation, set-up, adjustments and routine preventive maintenance, diagnosis and corrective repair of all system components. The training of service personnel shall be completed at least sixty (60) days prior to substantial completion and systems acceptance by the Owner. Provide two, eight (8) hour maintenance training sessions.

3. Contractor shall provide proposed course outlines.

C. Operational Training:

1. During the course of the installation the Owner will designate personnel to receive instruction in the operation and use of the specified systems. A minimum of forty (40) hours shall be provided to train these personnel in the aspects of operating these systems in five (5) separate, eight (8) hour sessions.

3.8 TRAINING AND TESTING SCHEDULE

A. Provide a schedule detailing the outline, date and duration of all training and testing no later than 120 days before substantial completion and systems acceptance by the Owner. Submit all dates to the Construction Manager for approval. Coordinate all dates with the CM, Owner, A/E, Manufacturers, Utilities and all other parties involved.

B. The Owner reserves the right to revise the schedule without incurring delay or additional cost to the contract.

3.9 AS-BUILT DOCUMENTS

A. In addition to the requirements of the specifications, as-built documents shall be provided to the engineer with all RFI's incorporated in an Autodesk REVIT 2014 drawing file.

3.10 PROTECTION

A. Protect all communications equipment from damage at all times. Cover and enclose all equipment to protect from damage by water or moisture.

3.11 ADJUSTMENT

A. Calibrate and adjust all equipment in accordance with manufacturer's instruction. Adjust and set all circuit breakers and relays in accordance with the Power System Study-Submittal 2.

3.12 CLEANING

A. At completion of the work, clean all elements of the communications system so that all markings deteriorating the original finish appearance are removed. All lighting fixtures and lenses shall be cleaned inside and out. All lamps shall be left clear of dust, smudges and grime.

B. Additionally, examine the interiors of panelboards, cabinets, lighting fixtures, boxes, and like components where conduit and/or wire connections have been made, and all resulting wire ends, insulation cuttings, knock-out plugs, metal filings and any other construction debris shall be removed so that interiors and exteriors are clean.

END OF SECTION 28 01 00

SECTION 28 05 13 - CONDUCTORS AND CABLES FOR ELECTRONIC SAFETY AND SECURITY

PART 1 - GENERAL

1.1 RELATED DOCUMENTS

A. Drawings and general provisions of the Trade Contract, including General and Supplementary Conditions, Division 01 Specification Sections, and Division 26 Sections apply to this Section.

1.2 SUMMARY

A. Section Includes:

1. UTP cabling.
2. Single mode optical fiber cabling.
3. RS-232 cabling.
4. RS-485 cabling.
5. Low-voltage control cabling.
6. Control-circuit conductors.
7. Fire alarm wire and cable.
8. Identification products.

1.3 DEFINITIONS

A. BICSI: Building Industry Consulting Service International.

B. EMI: Electromagnetic interference.

C. IDC: Insulation displacement connector.

D. Low Voltage: As defined in NFPA 70 for circuits and equipment operating at less than 50 V or for remote-control and signaling power-limited circuits.

E. Open Cabling: Passing telecommunications cabling through open space (e.g., between the studs of a wall cavity).

F. RCDD: Registered Communications Distribution Designer.

1.4 ACTION SUBMITTALS

A. Product Data: For each type of product.

1. For coaxial cable, include the following installation data for each type used:

   a. Nominal OD.
   b. Minimum bending radius.
   c. Maximum pulling tension.

1.5 INFORMATIONAL SUBMITTALS

A. Qualification Data: For qualified layout technician, installation supervisor, and field inspector.

B. Source quality-control reports.

C. Field quality-control reports.

1.6 QUALITY ASSURANCE

A. Testing Agency Qualifications: An NRTL.

   1. Testing Agency's Field Supervisor: Currently certified by BICSI as an RCDD to supervise on-site testing.

1.7 FIELD CONDITIONS

A. Do not install conductors and cables that are wet, moisture damaged, or mold damaged.

   1. Indications that wire and cables are wet or moisture damaged include, but are not limited to, discoloration and sagging of factory packing materials.

B. Environmental Limitations: Do not deliver or install UTP, optical fiber, and coaxial cables and connecting materials until wet work in spaces is complete and dry, and temporary HVAC system is operating and maintaining ambient temperature and humidity conditions at occupancy levels during the remainder of the construction period.

PART 2 - PRODUCTS

2.1 PERFORMANCE REQUIREMENTS

A. Surface-Burning Characteristics: Comply with ASTM E 84; testing by a qualified testing agency. Identify products with appropriate markings of applicable testing agency.

   1. Flame-Spread Index: 25 or less.

   2. Smoke-Developed Index: 50 or less.

B. Electrical Components, Devices, and Accessories: Listed and labeled as defined in NFPA 70, by a qualified testing agency, and marked for intended location and application.

2.2 BACKBOARDS

A. Backboards: Plywood, marine grade, painted with two coats of fire retardant paint, 3/4 by 48 by 96 inches (19 by 1220 by 2440 mm) unless noted otherwise. Comply with requirements for plywood backing panels in Division 06 Section "Rough Carpentry."

2.3 UTP CABLE AND HARDWARE

A. Conform to the requirements of Section 27, Communications Horizontal Cabling.

2.4 OPTICAL FIBER CABLE AND HARDWARE

A. Conform to the requirements of Division 27, Communications Backbone Cabling.

2.5 RS-232 CABLE

A. Plenum-Rated Cable: NFPA 70, Type CMP.

1. Paired, 2 pairs, No. 22 AWG, stranded (7x30) tinned copper conductors.
2. Plastic insulation.
3. Individual aluminum foil-polyester tape shielded pairs with 100 percent shield coverage.
4. Plastic jacket.
5. Pairs are cabled on common axis with No. 24 AWG, stranded (7x32) tinned copper drain wire.
6. Flame Resistance: Comply with NFPA 262.

2.6 RS-485 CABLE

A. Plenum-Rated Cable: NFPA 70, Type CMP.

1. Paired, 2 pairs, No. 22 AWG, stranded (7x30) tinned copper conductors.
2. Fluorinated ethylene propylene insulation.
3. Unshielded.
4. Fluorinated ethylene propylene jacket.
5. Flame Resistance: NFPA 262, Flame Test.

2.7 LOW-VOLTAGE CONTROL CABLE

A. Plenum-Rated, Paired Cable: NFPA 70, Type CMP.

1. One pair, twisted, size as recommended by manufacture, tinned copper conductors.
2. PVC insulation.
3. Unshielded.

4. PVC jacket.

5. Flame Resistance: Comply with NFPA 262.

2.8 CONTROL-CIRCUIT CONDUCTORS

A. Class 1 Control Circuits: Stranded copper, Type THHN-THWN, complying with UL 83, in raceway.

B. Class 2 Control Circuits: Stranded copper, Type THHN-THWN, complying with UL 83, in raceway.

C. Class 3 Remote-Control and Signal Circuits: Stranded copper, Type TW or TF, complying with UL 83.

2.9 FIRE ALARM WIRE AND CABLE

A. Manufacturers: Subject to compliance with requirements, available manufacturers offering products that may be incorporated into the Work include, but are not limited to, the following:

1. Comtran Corporation.

2. Draka Cableteq USA.

3. Genesis Cable Products; Honeywell International, Inc.

4. Rockbestos-Suprenant Cable Corp.

5. West Penn Wire.

B. General Wire and Cable Requirements: NRTL listed and labeled as complying with NFPA 70, Article 760.

C. Signaling Line Circuits: Twisted, shielded pair, not less than No. 18 AWG.

1. Circuit Integrity Cable: Twisted shielded pair, NFPA 70, Article 760, Classification CI, for power-limited fire alarm signal service Type FPL. NRTL listed and labeled as complying with UL 1424 and UL 2196 for a 2-hour rating.

D. Non-Power-Limited Circuits: Solid-copper conductors with 600-V rated, 75 deg C, color-coded insulation.

1. Low-Voltage Circuits: No. 16 AWG, minimum.

2. Line-Voltage Circuits: No. 12 AWG, minimum.

2.10 IDENTIFICATION PRODUCTS

A. Manufacturers: Subject to compliance with requirements, available manufacturers offering products that may be incorporated into the Work include, but are not limited to, the following:

1. Brady Worldwide, Inc.

2. HellermannTyton North America.

3. Kroy LLC.

4. Panduit Corp.

B. Comply with UL 969 for a system of labeling materials, including label stocks, laminating adhesives, and inks used by label printers.

C. Comply with requirements in Division 26 Section "Identification for Electrical Systems."

PART 3 - EXECUTION

3.1 INSTALLATION OF HANGERS AND SUPPORTS

A. Comply with requirements in Division 26 Section "Hangers and Supports for Electrical Systems" for installation of supports for cables.

3.2 WIRING METHOD

A. Install wiring in metal pathways and wireways.

1. Minimum conduit size shall be 3/4 inch (21 mm). Control and data transmission wiring shall not share conduit with other building wiring systems.

2. Comply with requirements in Division 26 Section "Raceway and Boxes For Electrical Systems."

3. Comply with requirements in Division 26 Section "Cable Trays for Communications Systems."

B. Wiring within Enclosures:

1. Bundle, lace, and train conductors to terminal points with no excess and without exceeding manufacturer's limitations on bending radii.

2. Install lacing bars and distribution spools.

3. Separate power-limited and non-power-limited conductors as recommended in writing by manufacturer.

4. Install conductors parallel with or at right angles to sides and back of enclosure.

5. Connect conductors that are terminated, spliced, or interrupted in any enclosure associated with intrusion system to terminal blocks.

6. Mark each terminal according to system's wiring diagrams.

7. Make all connections with approved crimp-on terminal spade lugs, pressure-type terminal blocks, or plug connectors.

3.3 INSTALLATION OF CONDUCTORS AND CABLES

A. Comply with NECA 1.

B. Conductors: Size according to system manufacturer's written instructions unless otherwise indicated.

C. General Requirements for Cabling:

1. Comply with TIA/EIA-568-B.1.

2. Comply with BICSI ITSIM, Ch. 6, "Cable Termination Practices."

3. Terminate all conductors; no cable shall contain unterminated elements. Make terminations only at indicated outlets, terminals, and cross-connect and patch panels.

4. Cables may not be spliced. Secure and support cables at intervals not exceeding 30 inches (760 mm) and not more than 6 inches (150 mm) from cabinets, boxes, fittings, outlets, racks, frames, and terminals.

5. Bundle, lace, and train conductors to terminal points without exceeding manufacturer's limitations on bending radii, but not less than radii specified in BICSI ITSIM, "Cabling Termination Practices" Chapter. Install lacing bars and distribution spools.

6. Do not install bruised, kinked, scored, deformed, or abraded cable. Do not splice cable between termination, tap, or junction points. Remove and discard cable if damaged during installation and replace it with new cable.

7. Cold-Weather Installation: Bring cable to room temperature before dereeling. Heat lamps shall not be used for heating.

8. Pulling Cable: Comply with BICSI ITSIM, Ch. 4, "Pulling Cable." Monitor cable pull tensions.

D. UTP and Fiber Optic Cable Installation: Conform with Division 27 requirements.

E. Separation from EMI Sources:

1. Comply with BICSI TDMM and TIA-569-B recommendations for separating unshielded copper voice and data communication cable from potential EMI sources, including electrical power lines and equipment.

2. Separation between open communications cables or cables in nonmetallic raceways and unshielded power conductors and electrical equipment shall be as follows:

a. Electrical Equipment Rating Less Than 2 kVA: A minimum of 5 inches (127 mm).

3. Separation between communications cables in grounded metallic raceways and unshielded power lines or electrical equipment shall be as follows:

a. Electrical Equipment Rating Less Than 2 kVA: A minimum of 2-1/2 inches (64 mm).

4. Separation between cables in grounded metallic raceways and power lines and electrical equipment located in grounded metallic conduits or enclosures shall be as follows:

a. Electrical Equipment Rating Less Than 2 kVA: No requirement.

5. Separation between Cables and Electrical Motors and Transformers, 5 kVA or HP and Larger: A minimum of 48 inches (1200 mm).

6. Separation between Cables and Fluorescent Fixtures: A minimum of 5 inches (127 mm).

3.4 FIRE ALARM WIRING INSTALLATION

A. Comply with NECA 1 and NFPA 72.

B. Wiring Method: Install wiring in metal raceway according to Division 26 Section "Raceways and Boxes for Electrical Systems."

1. Install plenum cable in environmental air spaces, including plenum ceilings.
2. Fire alarm circuits and equipment control wiring associated with the fire alarm system shall be installed in a dedicated raceway system. This system shall not be used for any other wire or cable.

C. Wiring within Enclosures: Separate power-limited and non-power-limited conductors as recommended by manufacturer. Install conductors parallel with or at right angles to sides and back of the enclosure. Bundle, lace, and train conductors to terminal points with no excess. Connect conductors that are terminated, spliced, or interrupted in any enclosure associated with the fire alarm system to terminal blocks. Mark each terminal according to the system's wiring diagrams. Make all connections with approved crimp-on terminal spade lugs, pressure-type terminal blocks, or plug connectors.

D. Cable Taps: Use numbered terminal strips in junction, pull, and outlet boxes, cabinets, or equipment enclosures where circuit connections are made.

E. Color-Coding: Color-code fire alarm conductors differently from the normal building power wiring. Use one color-code for alarm circuit wiring and another for supervisory circuits. Color-code audible alarm-indicating circuits differently from alarm-initiating circuits. Use different colors for visible alarm-indicating devices. Paint fire alarm system junction boxes and covers red.

F. Risers: Install at least two vertical cable risers to serve the fire alarm system. Separate risers in close proximity to each other with a minimum one-hour-rated wall, so the loss of one riser does not prevent the receipt or transmission of signals from other floors or zones.

G. Wiring to Remote Alarm Transmitting Device: 1-inch (25-mm) conduit between the fire alarm control panel and the transmitter. Install number of conductors and electrical supervision for connecting wiring as needed to suit monitoring function.

3.5 POWER AND CONTROL-CIRCUIT CONDUCTORS

A. 120-V Power Wiring: Install according to Division 26 Section "Low-Voltage Electrical Power Conductors and Cables" unless otherwise indicated.

B. Minimum Conductor Sizes:

1. Class 1 remote-control and signal circuits, No. 14 AWG.
2. Class 2 low-energy, remote-control and signal circuits, No. 16 AWG.
3. Class 3 low-energy, remote-control, alarm and signal circuits, No. 12 AWG.

3.6 CONNECTIONS

A. Comply with requirements in Division 28 Section "Access Control" for connecting, terminating, and identifying wires and cables.

B. Comply with requirements in Division 28 Section "Video Surveillance" for connecting, terminating, and identifying wires and cables.

C. Comply with requirements in Division 28 Section "Digital, Addressable Fire-Alarm System" for connecting, terminating, and identifying wires and cables.

3.7 FIRESTOPPING

A. Comply with requirements in Division 07 Section "Penetration Firestopping."

3.8 GROUNDING

A. For communications wiring, comply with J-STD-607-A and with BICSI TDMM, "Grounding, Bonding, and Electrical Protection" Chapter.

B. For low-voltage wiring and cabling, comply with requirements in Division 26 Section "Grounding and Bonding for Electrical Systems."

3.9 IDENTIFICATION

A. Identify system components, wiring, and cabling complying with TIA/EIA-606-A. Comply with requirements for identification specified in Division 26 Section "Identification for Electrical Systems."

3.10 FIELD QUALITY CONTROL

A. Testing Agency: Engage a qualified testing agency to perform tests and inspections.

B. Manufacturer's Field Service: Engage a factory-authorized service representative to test and inspect components, assemblies, and equipment installations, including connections.

C. Perform the following tests and inspections per Division 27 requirements for the specific cable type.Document data for each measurement. Print data for submittals in a summary report that is formatted using Table 10.1 in BICSI TDMM as a guide, or transfer the data from the instrument to the computer, save as text files, print, and submit.

D. End-to-end cabling will be considered defective if it does not pass tests and inspections.

E. Prepare test and inspection reports.

END OF SECTION 28 05 13

SECTION 28 13 00 - ACCESS CONTROL SYSTEM

PART 1 - GENERAL

1.1 RELATED DOCUMENTS

A. Drawings and general provisions of the Trade Contract, including General and Supplementary Conditions and Division 01 Specification Sections, apply to this Section.

1.2 SUMMARY

A. Section Includes:

1. Security access central-control station.
2. One or more security access networked workstations.
3. Security access operating system and application software.
4. Security access controllers connected to high-speed electronic-data transmission network.

1.3 SCOPE:

A. Scope of Work for Access Control System shall be as specified below as a minimum.

B. Provide and configure the new electronic security access control system as shown on the drawings and specified here-in. All component of the access control system shall be configured to communicate to the existing head-end security system (Lenel Head-end) located in the security system communication room located in New Haven Component Change-Out (CCO) building (Room 160), see drawing SC-010 for location.

C. Furnish and install all cabling/conduit/raceways and modules required for a complete and operational system.

D. All Access Control System component shall be install/configured as specified on the contract drawings and directed by the Contractor's System Integrator, the system shall perform its functions in conjunction to the following (but not limited to) physical security hardware: Magnetic lock, door contact, traffic gate, slide gate, personal swing gate to achieve the intended access control, intrusion detection and alarm acknowledge/reporting functionalities.

E. Access Control shall be via card-reader capable of reading the agency's issued contactless card (iclass card). The contractor shall also program and configure other proximity frequencies in the access control system to allow other agency's approved personnel to gain access, as directed by MNR Security/Contractor's System Integrator.

F. All access control system equipment cabinet shall be wired with tamper alarm which will report back to the Lenel Head-End as a tamper alarm that requires acknowledgement from security operators via the access control system clients.

G. Provide all client software and programming as needed to allow all physical security hardware and access control system component to fully function capable of all required control, indications and reporting.

H. A configuration plan shall be submitted to the Engineer and MNR representatives for approval; the configuration plan shall outline the following:

1. Device naming convention
2. Device default setting – access card reader behavior, terminal type used
3. Access Control System Behavior (include but not limited to): Open timer, extended open timer, alarm interval, alarm severity level, required action, device linkage, time zone configuration, emergency override, other aux input/output alert/alarm notification
4. Proximity card parameter configurations as requested by the agency, and its associated credentials/properties (i.e. default activation/deactivation)
5. General Access Control Level Assignment
6. Special Restrict Access Parameters, Assignment and Exceptions
7. Access Control Cardholder database form IWT (approx. 20,000 entries) shall be imported into the existing Lenel data base.

I. Furnish all required licenses (with a minimum of 10% spare) and provide any additional system configuration or system administrative tasks are required to ensure a fully function access control system. The tasks included (but not limited to):

1. Patching/Updating of Access Control System Software
2. Patching/Updating of Access Control System Server Operating System
3. Install new database product to support access control system
4. Install/configure diagnostic application to allow testing/verification of access control system communication status.
5. Provide Training, As-built, OEM Manual and all administrative password to all system for the required purposes of future administrative needs of the access control system.

1.4 ACTION SUBMITTIALS

A. Product Data: For each type of product indicated. Include rated capacities, operating characteristics, and furnished specialties and accessories. Reference each product to a location on Drawings. Test and evaluation data presented in Product Data shall comply with SIA BIO-01.

B. Shop Drawings: Include plans, elevations, sections, details, and attachments to other work.

1. Diagrams for cable management system.
2. System labeling schedules, including electronic copy of labeling schedules that are part of the cable and asset identification system of the software specified in Parts 2 and 3.
3. Wiring Diagrams. For power, signal, and control wiring. Cable Administration Drawings: As specified in "Identification" Article.
4. Battery and charger calculations for central station, workstations, and controllers.

C. Other Action Submittals:

1. Project planning documents as specified in Part 3.

1.5 INFORMATIONAL SUBMITTALS

A. Field quality-control reports.

1.6 CLOSEOUT SUBMITTALS

A. Operation and Maintenance Data: For security system to include in emergency, operation, and maintenance manuals. In addition to items specified in Division 01 Section "Operation and Maintenance Data," include the following:

1. Hard copies of manufacturer's specification sheets, operating specifications, design guides, user's guides for software and hardware, and PDF files on CD-ROM of the hard-copy submittal.

2. System installation and setup guides with data forms to plan and record options and setup decisions.

1.7 QUALITY ASSURANCE

A. Contractor Qualifications: The Contractor/Subcontractor shall be an authorized distributor of the manufacturer’s equipment specified for the Access Control and Intrusion Detection systems and a listed Lenel Value Added Reseller for Connecticut. The owner has utilized National Security Cooperation, 74 Montowese Ave, North Haven, CT for previous projects.

B. Technician Qualifications: All technicians who install/program or configure the system shall be factory trained and certified by the Access Control system manufacturers (equivalent of a Gold level certification for Lenel Onguard Access Control System).

C. Installer Qualifications: An employer of workers trained and approved by manufacturer.

1. Cable installer must have on staff a registered communication distribution designer certified by Building Industry Consulting Service International.

D. Source Limitations: Obtain central station, workstations, controllers, Identifier readers, and all software through one source from single manufacturer.

E. Electrical Components, Devices, and Accessories: Listed and labeled as defined in NFPA 70, by a qualified testing agency, and marked for intended location and application.

F. Comply with NFPA 70, "National Electrical Code."

G. The Trade Contractor shall adhere to MNR security requirements specified in Section 01 11 00 - Notice to Contractor - Compliance with MTA Security Sensitive Information Handbook. The Trade Contractor shall read, understand, and adhere to the handbook. In

addition to this, the Trade Contractor shall complete and submit all required forms and documentation specified within the handbook to MNR for approval.

1.8 DELIVERY, STORAGE, AND HANDLING

A. Controllers:

1. Store in temperature- and humidity-controlled environment in original manufacturer's sealed containers. Maintain ambient temperature between 50 and 85 deg F (10 and 30 deg C), and not more than 80 percent relative humidity, noncondensing.

2. Open each container; verify contents against packing list; and file copy of packing list, complete with container identification, for inclusion in operation and maintenance data.

3. Mark packing list with the same designations assigned to materials and equipment for recording in the system labeling schedules that are generated by software specified in "Cable and Asset Management Software" Article.

4. Save original manufacturer's containers and packing materials and deliver as directed under provisions covering extra materials.

1.9 PROJECT CONDITIONS

A. Environmental Conditions: System shall be capable of withstanding the following environmental conditions without mechanical or electrical damage or degradation of operating capability:

1. Control Station: Rated for continuous operation in ambient conditions of 60 to 85 deg F (16 to 30 deg C) and a relative humidity of 20 to 80 percent, noncondensing.

2. Indoor, Controlled Environment: NEMA 250, Type 1 enclosure. System components, except the central-station control unit, installed in air-conditioned indoor environments shall be rated for continuous operation in ambient conditions of 36 to 122 deg F (2 to 50 deg C) dry bulb and 20 to 90 percent relative humidity, noncondensing.

3. Indoor, Uncontrolled Environment: NEMA 250. System components installed in non-air-conditioned indoor environments shall be rated for continuous operation in ambient conditions of 0 to 122 deg F (minus 18 to plus 50 deg C) dry bulb and 20 to 90 percent relative humidity, noncondensing.

4. Outdoor Environment: NEMA 250, NEMA 250, Type 3R enclosures. System components installed in locations exposed to weather shall be rated for continuous operation in ambient conditions of minus 30 to plus 122 deg F (minus 34 to plus 50 deg C) dry bulb and 20 to 90 percent relative humidity, condensing. Rate for continuous operation where exposed to rain as specified in NEMA 250, winds up to 85 mph (137 km/h) and snow cover up to 24 inches (610 mm) thick.

5. Hazardous Environment: System components located in areas where fire or explosion hazards may exist because of flammable gases or vapors, flammable liquids, combustible dust, or ignitable fibers shall be rated, listed, and installed according to NFPA 70.

PART 2 - PRODUCTS

2.1 MANUFACTURERS

A. Basis-of-Design Product: Subject to compliance with requirements, hardware provided by Lenel.

2.2 DESCRIPTION

A. Security Access System: Existing PC-based central station and field-installed controllers, connected by a high-speed electronic-data transmission network.

B. System Software: Existing software shall be expanded to provide capacity for the new facility. System operation shall remain as is, except as required for this expansion.

C. Provide card access controllers to control doors and gates as shown on drawings.

D. Security access system shall use existing single database for access-control and credential-creation functions.

2.3 SURGE AND TAMPER PROTECTION

A. Surge Protection: Protect components from voltage surges originating external to equipment housing and entering through power, communication, signal, control, or sensing leads. Include surge protection for external wiring of each conductor-entry connection to components.

1. Minimum Protection for Communication, Signal, Control, and Low-Voltage Power Connections: Comply with requirements in Division 26 Section "Transient-Voltage Suppression for Low-Voltage Electrical Power Circuits." as recommended by manufacturer for type of line being protected.

B. Tamper Protection: Tamper switches on enclosures, control units, pull boxes, junction boxes, cabinets, and other system components shall initiate a tamper-alarm signal when unit is opened or partially disassembled. Control-station control-unit alarm display shall identify tamper alarms and indicate locations.

2.4 CONTROLLERS

A. Controllers: Intelligent peripheral control unit, complying with UL 294, that stores time, date, valid codes, access levels, and similar data downloaded from the central station or workstation for controlling its operation. All controllers shall be Lenel LNL series.

B. Entry-Control Controller:

1. Function: Provide local entry-control functions including one- and two-way communications with access-control devices such as card readers, keypads, biometric personnel identity-verification devices, door strikes, magnetic latches, gate and door operators, and exit push buttons. Provide Lenel LNL-1320 (single door), LNL-2220 (dual

door) readers as required for doors shown. Each controller cabinets shall have tamper a switch.

C. Input Controller:

1. Input controller shall have a minimum of 16 inputs for security contact devices.

2. Provide Lenel 1100 with power, cabinet and tamper switch.

3. Provide number of controllers as required for devices shown on plans.

D. Output Controller:

1. Output controller shall be Lenel 1200; provide number of controllers as required for devices shown on plans

E. System Controllers:

1. Provide Lenel system controller for interfacing to Ethernet network for reporting and database access. Each controller cabinets shall have tamper a switch. Provide Lenel 3300.

F. Controller Power: NFPA 70, Class II power-supply transformer, with 12- or 24-V ac secondary, backup battery and charger.

a. Backup Power-Supply Capacity: 90 minutes of battery supply.

b. Provide Lenel or Altronix AL600UL, quantity as required for number of doors shown.

2.5 CARD READERS, CREDENTIAL CARDS, AND KEYPADS

A. Card-Reader Power: Powered from its associated controller, including its standby power source.

B. Enclosure: Suitable for surface, semi-flush, pedestal, or weatherproof mounting. Mounting types shall additionally be suitable for installation in the following locations:

1. Indoors, controlled environment.

2. Indoors, uncontrolled environment.

3. Outdoors, with built-in heaters or other cold-weather equipment to extend the operating temperature range as needed for operation at the site.

C. Display: Digital visual indicator shall provide visible and audible status indications and user prompts. Indicate power on or off, whether user passage requests have been accepted or rejected, and whether the door is locked or unlocked.

D. Proximity Readers:

1. Active-detection proximity card readers shall provide power to compatible credential cards through magnetic induction, and shall receive and decode a unique identification code number transmitted from the credential card.

2. Passive-detection proximity card readers shall use a swept-frequency, RF field generator to read the resonant frequencies of tuned circuits laminated into compatible credential

cards. The resonant frequencies read shall constitute a unique identification code number.

3. The card reader shall read proximity cards in a range from direct contact to at least 6 inches (150 mm) from the reader.

4. Provide Lenel RP40 series.

E. Credential Card: Existing credential cards will be utilized.

2.6 PUSH-BUTTON SWITCHES

A. Schlage, Model 631, Extreme Duty Pushbuttons, Push to Exit nomenclature.

2.7 DOOR AND GATE HARDWARE INTERFACE

A. Exit Device with Alarm: Operation of the exit device shall generate an alarm and annunciate a local alarm. Exit device and alarm contacts are specified in Division 08 Section "Door Hardware."

B. Exit Alarm: Operation of a monitored door shall generate an alarm.

C. Electric Door Strikes: Use end-of-line resistors to provide power-line supervision. Signal switches shall transmit data to controller to indicate when the bolt is not engaged and the strike mechanism is unlocked, and they shall report a forced entry. Power and signal shall be from the controller. Electric strikes are specified in Division 08 Section "Door Hardware."

D. Electromagnetic Locks: End-of-line resistors shall provide power-line supervision. Lock status sensing signal shall positively indicate door is secure. Power and signal shall be from the controller. Electromagnetic locks are specified in Division 08 Section "Door Hardware."

E. Vehicle Gate Operator: Interface electrical operation of gate with controls in this Section. Vehicle gate operators shall be connected, monitored, and controlled by the security access controllers. Vehicle gate and accessories are specified in Division 32 Section "Chain Link Fences and Gates."

F. Provide surge protectors (MOV) on all door strikes. MOV shall be 25mm diameter minimum or larger as recommended by manufacture.

2.8 DOOR SWITCHES:

A. Provide wide gap, surface of flush mounted door switches.

B. Door switches for swing doors shall be concealed, Sentrol 2757/2767 provided by door hardware trade

C. Door switches for rolling overhead doors, Sentrol 2302 series with mounting brackets.

2.9 PASSIVE INFRARED MOTION DETECTOR

A. Passive infrared detectors shall be designed for request to exit service.

B. View shall be adjustable vertically for best operation.

C. Provide Detection Systems, model TP160.

2.10 TAMPER SWITCHES

A. Tamper switches shall be plunger type, Sentrol 3012 series.

B. Provide tamper switches on all cabinets and junction boxes larger than 5” in any dimension.

2.11 AUDIO/VISUAL SIGNALS

A. Provide Wheelock MT series.

2.12 PEDESTAL

A. Pedestals shall be dual height powder coated steel with pedestal housing for security electronics.

B. Pedestal construction shall be 2” square tubes welded to a base flange and 4” universal housing flanges.

C. Basis of design: Pedestal CEO 72-9C-d with two MC-CS/-16-E.

2.13 CABLES

A. General Cable Requirements: Comply with requirements in Division 28 Section "Conductors and Cables for Electronic Safety and Security" and as recommended by system manufacturer for integration requirement.

B. PVC-Jacketed, TIA 485-A Cables: Two pairs, twisted, No. 22 AWG, stranded (7x30) tinned copper conductors, PVC insulation, unshielded, PVC jacket, and NFPA 70, Type CMG.

C. Multiconductor, Plenum-Type, Reader and Wiegand Keypad Cables:

1. Six conductors, No. 20 AWG, stranded (7x28) tinned copper conductors, fluorinated-ethylene-propylene insulation, overall aluminum-foil/polyester-tape shield with 100 percent shield coverage plus tinned copper braid shield with 85 percent shield coverage, and fluorinated-ethylene-propylene jacket.
2. NFPA 70, Type CMP.
3. Flame Resistance: NFPA 262 flame test.

D. Paired, Plenum-Type, Lock Cables:

1. One pair, twisted, No. 18 AWG, stranded (19x30) tinned copper conductors, fluorinated-ethylene-propylene insulation, unshielded, and plastic jacket.
2. NFPA 70, Type CMP.
3. Flame Resistance: NFPA 262 flame test.

E. Paired, Plenum-Type, Input Cables:

1. One pair, twisted, No. 22 AWG, stranded (7x30) tinned copper conductors, fluorinated-ethylene-propylene insulation, aluminum-foil/polyester-tape shield (foil side out), with No. 22 AWG drain wire, 100 percent shield coverage, and plastic jacket.
2. NFPA 70, Type CMP.
3. Flame Resistance: NFPA 262 flame test.

F. Paired, Plenum-Type, AC Transformer Cables:

1. One pair, twisted, No. 18 AWG, stranded (19x30) tinned copper conductors, fluorinated-ethylene-propylene insulation, unshielded, and plastic jacket.

2. NFPA 70, Type CMP.

3. Flame Resistance: NFPA 262 flame test.

G. LAN Cabling:

1. Comply with requirements in Division 27 Section "Communications Horizontal Cabling”

PART 3 - EXECUTION

3.1 EXAMINATION

A. Examine pathway elements intended for cables. Check raceways, cable trays, and other elements for compliance with space allocations, installation tolerances, hazards to cable installation, and other conditions affecting installation.

B. Examine roughing-in for LAN and control cable conduit systems to PCs, controllers, card readers, and other cable-connected devices to verify actual locations of conduit and back boxes before device installation.

C. Proceed with installation only after unsatisfactory conditions have been corrected.

3.2 PREPARATION

A. Comply with recommendations in SIA CP-01.

B. Obtain detailed Project planning forms from manufacturer of access-control system; develop custom forms to suit Project. Fill in all data available from Project plans and specifications and publish as Project planning documents for review and approval.

1. Record setup data for control station and workstations.

2. For each Location, record setup of controller features and access requirements.

3. Propose start and stop times for time zones and holidays, and match up access levels for doors.

4. Set up groups, facility codes, linking, and list inputs and outputs for each controller.

5. Assign action message names and compose messages.

6. Set up alarms. Establish interlocks between alarms, intruder detection, and video surveillance features.

7. Prepare and install alarm graphic maps.

8. Develop user-defined fields.

9. Develop screen layout formats.

10. Prepare a specific plan for system testing, startup, and demonstration.

11. Develop acceptance test concept and, on approval, develop specifics of the test.

C. In meetings with CTDOT PM and Owner, present Project planning documents and review, adjust, and prepare final setup documents. Use final documents to set up system software.

D. Coordinate with System Integrator and provide programming as directed by SI.

3.3 CABLING

A. Comply with NECA 1, "Good Workmanship in Electrical Construction."

B. Install cables and wiring according to requirements in Division 28 Section "Conductors and Cables for Electronic Safety and Security."

C. Wiring Method: Install wiring in raceway and cable tray except within consoles, cabinets, desks, and counters. Conceal raceway and wiring except in unfinished spaces.

D. Install LAN cables using techniques, practices, and methods that are consistent with Category 5E rating of components and fiber-optic rating of components, and that ensure Category 6 and fiber-optic performance of completed and linked signal paths, end to end.

E. Boxes and enclosures containing security-system components or cabling, and which are easily accessible to employees or to the public, shall be provided with a lock. Boxes above ceiling level in occupied areas of the building shall not be considered accessible. Junction boxes and small device enclosures below ceiling level and easily accessible to employees or the public shall be covered with a suitable cover plate and secured with tamperproof screws.

F. Install end-of-line resistors at the field device location and not at the controller or panel location.

3.4 CABLE APPLICATION

A. Comply with TIA 569-B, "Commercial Building Standard for Telecommunications Pathways and Spaces."

B. Cable application requirements are minimum requirements and shall be exceeded if recommended or required by manufacturer of system hardware.

C. TIA 232-F Cabling: Install at a maximum distance of 50 ft. (15 m).

D. TIA 485-A Cabling: Install at a maximum distance of 4000 ft. (1220 m).

E. Card Readers and Keypads:

1. Install number of conductor pairs recommended by manufacturer for the functions specified.

2. Unless manufacturer recommends larger conductors, install No. 22 AWG wire if maximum distance from controller to the reader is 250 ft. (75 m), and install No. 20 AWG wire if maximum distance is 500 ft. (150 m).

3. For greater distances, install "extender" or "repeater" modules recommended by manufacturer of the controller.

4. Install minimum No. 18 AWG shielded cable to readers and keypads that draw 50 mA or more.

F. Install minimum No. 16 AWG cable from controller to electrically powered locks. Do not exceed 500ft. (150 m).

G. Install minimum No. 18 AWG ac power wire from transformer to controller, with a maximum distance of 25 ft. (8 m).

3.5 GROUNDING

A. Comply with Division 26 Section "Grounding and Bonding for Electrical Systems."

B. Comply with IEEE 1100, "Recommended Practice for Power and Grounding Electronic Equipment."

C. Ground cable shields, drain conductors, and equipment to eliminate shock hazard and to minimize ground loops, common-mode returns, noise pickup, cross talk, and other impairments.

D. Bond shields and drain conductors to ground at only one point in each circuit.

E. Signal Ground:

1. Terminal: Locate in each equipment room and wiring closet; isolate from power system and equipment grounding.

2. Bus: Mount on wall of main equipment room with standoff insulators.

3. Backbone Cable: Extend from signal ground bus to signal ground terminal in each equipment room and wiring closet.

3.6 INSTALLATION

A. Push Buttons: Where multiple push buttons are housed within a single switch enclosure, they shall be stacked vertically with each push-button switch labeled with 1/4-inch- (6.4-mm-) high text and symbols as required. Push-button switches shall be connected to the controller associated with the portal to which they are applied, and shall operate the appropriate electric strike, electric bolt, or other facility release device.

B. Install card readers, keypads, push buttons, and biometric readers.

3.7 IDENTIFICATION

A. Label each terminal strip and screw terminal in each cabinet, rack, or panel.

1. All wiring conductors connected to terminal strips shall be individually numbered, and each cable or wiring group being extended from a panel or cabinet to a building-mounted device shall be identified with the name and number of the particular device as shown.

2. Each wire connected to building-mounted devices is not required to be numbered at the device if the color of the wire is consistent with the associated wire connected and numbered within the panel or cabinet.

3.8 SYSTEM SOFTWARE AND HARDWARE

A. Develop, install, and test software and hardware, and perform database tests for the complete and proper operation of systems involved. Assign software license to Owner.

B. Provide software licenses for all devices used in this addition. Provide a minimum of 10% spare licenses (minimum 1) for each device in the building.

C. Licenses for the existing servers and work stations shall be upgraded to accommodate this addition.

3.9 FIELD QUALITY CONTROL

A. Perform tests and inspections.

1. Manufacturer's Field Service: Engage a factory-authorized service representative to inspect components, assemblies, and equipment installations, including connections, and to assist in testing.

B. Tests and Inspections:

1. LAN Cable Procedures: Inspect for physical damage and test each conductor signal path for continuity and shorts. Use Class 2, bidirectional, Category 5 tester. Test for faulty connectors, splices, and terminations. Test according to TIA/EIA 568-B.1, "Commercial Building Telecommunications Cabling Standards - Part 1: General Requirements." Link performance for UTP cables must comply with minimum criteria in TIA/EIA 568-B.1.

2. Test each circuit and component of each system. Tests shall include, but are not limited to, measurements of power-supply output under maximum load, signal loop resistance, and leakage to ground where applicable. System components with battery backup shall be operated on battery power for a period of not less than 10 percent of the calculated battery operating time. Provide special equipment and software if testing requires special or dedicated equipment.

3. Operational Test: After installation of cables and connectors, demonstrate product capability and compliance with requirements. Test each signal path for end-to-end performance from each end of all pairs installed. Remove temporary connections when tests have been satisfactorily completed.

C. Devices and circuits will be considered defective if they do not pass tests and inspections.

D. Prepare test and inspection reports.

3.10 STARTUP SERVICE

A. Engage a factory-authorized service representative to supervise and assist with startup service.

1. Complete installation and startup checks according to approved procedures that were developed in with manufacturer's written instructions.

2. Enroll and prepare badges and access cards for Owner's operators, management, and security personnel.

3.11 DEMONSTRATION

A. Train Owner's maintenance personnel to adjust, operate, and maintain security access system. See Division 01 Section "Demonstration and Training."

END OF SECTION 28 13 00

SECTION 28 23 00 - VIDEO SURVEILLANCE SYSTEM

PART 1 - GENERAL

1.1 RELATED DOCUMENTS

A. Drawings and general provisions of the Trade Contract, including General and Supplementary Conditions, Division 01 Specification Sections, and Division 26 Sections apply to this Section.

1.2 SCOPE

A. Scope of Work for Video Surveillance System shall be as specified here-in as a minimum.

B. Provide and configure the new Video Surveillance System components shown on the drawings and specified here-in. All components of the video surveillance system shall be configured to communicate to the existing head-end security system (Lenel Head-end) located in the security system communication room located in New Haven Component Change-Out (CCO) building (Room 160), see drawing SC-010 for location.

C. Furnish and install all cameras, cabling/conduit/raceways and modules required for a complete and operational system.

D. All video surveillance system components shall be install/configured as specified on the contract drawings and directed by the Contractor's System Integrator, the system shall perform its functions in conjunction with the security network and existing head end.

E. The contractor shall also program and configure the cameras to allow agency's approved personnel to gain access, as directed by MNR Security/Contractor's System Integrator.

F. Cameras shall be programmed and configured for the views as directed by the owner and functions specified here-in.

G. Provide all client software and programming as needed to allow all video surveillance system components to fully function and capable of all required control, indications and reporting.

H. A configuration plan shall be submitted to the Engineer and MNR representatives for approval; the configuration plan shall outline the following:
   1. Device naming convention
   2. Device default setting – camera behavior and view
   3. Workstation behavior, including presets and default views for the MOW facility.
   4. Camera configurations as requested by the agency, and its associated credentials.

I. Furnish all required licenses (with a minimum of 10% spare) and provide any additional system configuration or system administrative tasks are required to ensure a fully function access control system. The tasks included (but not limited to):
   1. Patching/Updating of Video Surveillance System Software
   2. Patching/Updating of Video Surveillance System Operating System
   3. Install new database product to support Video Surveillance System.

4. Install/configure diagnostic application to allow testing/verification of access control system communication status.
5. Provide Training, As-built, OEM Manual and all administrative password to all system for the required purposes of future administrative needs of the access control system.

1.3 SUMMARY

A. Section includes a video surveillance system consisting of cameras, digital video recorder, data transmission wiring, and a control station with its associated equipment.

1.4 PERFORMANCE REQUIREMENTS

A. Seismic Performance: Video surveillance system shall withstand the effects of earthquake motions determined according to ASCE/SEI 7.

1. The term "withstand" means "the unit will remain in place without separation of any parts from the device when subjected to the seismic forces specified."

1.5 ACTION SUBMITTALS

A. Product Data: For each type of product indicated. Include dimensions and data on features, performance, electrical characteristics, ratings, and finishes.

B. Shop Drawings: For video surveillance. Include plans, elevations, sections, details, and attachments to other work.

1. Detail equipment assemblies and indicate dimensions, weights, loads, required clearances, method of field assembly, components, and location and size of each field connection.
2. Functional Block Diagram: Show single-line interconnections between components for signal transmission and control. Show cable types and sizes.
3. Dimensioned plan and elevations of equipment racks, control panels, and consoles. Show access and workspace requirements.
4. UPS: Sizing calculations.
5. Wiring Diagrams: For power, signal, and control wiring.

C. Equipment List: Include every piece of equipment by model number, manufacturer, serial number, location, and date of original installation. Add pretesting record of each piece of equipment, listing name of person testing, date of test, set points of adjustments, name and description of the view of preset positions, description of alarms, and description of unit output responses to an alarm.

1.6 INFORMATIONAL SUBMITTALS

A. Seismic Qualification Certificates: For video surveillance, cameras, camera-supporting equipment, accessories, and components, from manufacturer.

1. Basis for Certification: Indicate whether withstand certification is based on actual test of assembled components or on calculation.

2. Dimensioned Outline Drawings of Equipment Unit: Identify center of gravity and locate and describe mounting and anchorage provisions.

3. Detailed description of equipment anchorage devices on which the certification is based and their installation requirements.

B. Field quality-control reports.

C. Warranty: Sample of special warranty.

1.7 CLOSEOUT SUBMITTALS

A. Operation and Maintenance Data: For cameras, power supplies, infrared illuminators, monitors, videotape recorders, digital video recorders, video switches, and control-station components to include in emergency, operation, and maintenance manuals. In addition to items specified in Division 01 Section "Operation and Maintenance Data," include the following:

1. Lists of spare parts and replacement components recommended to be stored at the site for ready access.

1.8 QUALITY ASSURANCE

A. Electrical Components, Devices, and Accessories: Listed and labeled as defined in NFPA 70, by a qualified testing agency, and marked for intended location and application.

B. Comply with NECA 1.

C. Comply with NFPA 70.

D. Electronic data exchange between video surveillance system with an access-control system shall comply with SIA TVAC.

E. Comply with the requirements of the MTA Security Sensitive Handbook Version 3 March 15 2006

1.9 PROJECT CONDITIONS

A. Environmental Conditions: Capable of withstanding the following environmental conditions without mechanical or electrical damage or degradation of operating capability:

1. Control Station: Rated for continuous operation in ambient temperatures of 60 to 85 deg F (16 to 29 deg C) and a relative humidity of 20 to 80 percent, noncondensing.

2. Interior, Controlled Environment: System components, except central-station control unit, installed in temperature-controlled interior environments shall be rated for continuous operation in ambient temperatures of 36 to 122 deg F (2 to 50 deg C) dry bulb and 20 to 90 percent relative humidity, noncondensing. Use NEMA 250, Type 1 enclosures.

3. Interior, Uncontrolled Environment: System components installed in non-temperature-controlled interior environments shall be rated for continuous operation in ambient temperatures of 0 to 122 deg F (minus 18 to plus 50 deg C) dry bulb and 20 to 90 percent relative humidity, noncondensing. Use NEMA 250 enclosures.

4. Exterior Environment: System components installed in locations exposed to weather shall be rated for continuous operation in ambient temperatures of minus 30 to plus 122 deg F (minus 34 to plus 50 deg C) dry bulb and 20 to 90 percent relative humidity, condensing. Rate for continuous operation when exposed to rain as specified in NEMA 250, winds up to 85 mph (137 km/h) and snow cover up to 24 inches (610 mm) thick. Use NEMA 250, Type 3R enclosures.

5. Hazardous Environment: System components located in areas where fire or explosion hazards may exist because of flammable gases or vapors, flammable liquids, combustible dust, or ignitable fibers shall be rated, listed, and installed according to NFPA 70.

6. Security Environment: Camera housing for use in high-risk areas where surveillance equipment may be subject to physical violence.

1.10 CONTRACTOR QUALIFICATIONS AND SECURITY REQUIREMENTS

A. The Trade Contractor for the work within this section shall be a Lenel Value Added Reseller (VAR).

B. The Trade Contractor shall adhere to MNR security requirements specified in Section 01 11 00 - Notice to Contractor - Compliance with MTA Security Sensitive Information Handbook. The Trade Contractor shall read, understand, and adhere to the handbook. In addition to this, the Trade Contractor shall complete and submit all required forms and documentation specified within the handbook to MNR for approval.

PART 2 - PRODUCTS

2.1 SYSTEM REQUIREMENTS

A. Surge Protection: Protect components from voltage surges originating external to equipment housing and entering through power, communication, signal, control, or sensing leads. Include surge protection for external wiring of each conductor's entry connection to components.

1. Minimum Protection for Power Connections 120 V and More: Auxiliary panel suppressors complying with requirements in Division 26 Section "Transient-Voltage Suppression for Low-Voltage Electrical Power Circuits."

2. Minimum Protection for Communication, Signal, Control, and Low-Voltage Power Connections: Comply with requirements in Division 26 Section "Transient-Voltage Suppression for Low-Voltage Electrical Power Circuits." as recommended by manufacturer for type of line being protected.

B. Tamper Protection: Tamper switches on enclosures, control units, pull boxes, junction boxes, cabinets, and other system components shall initiate a tamper-alarm signal when unit is opened or partially disassembled. Control-station, control-unit alarm display shall identify tamper alarms and indicate locations.

2.2 IP VIDEO SYSTEMS

A. Description:

1. System shall provide high-quality delivery and processing of IP-based video, audio, and control data using standard Ethernet-based networks.
2. System shall have seamless integration of all video surveillance and control functions.
3. Graphical user interface software shall manage all IP-based video matrix switching and camera control functions, two-way audio communication, alarm monitoring and control, and recording and archive/retrieval management. IP system shall also be capable of integrating into larger system environments.
4. System design shall include all necessary compression software for high-performance, dual-stream, MPEG-2/MPEG-4 and H.264 video. Unit shall provide connections for all video cameras, camera PTZ control data, bidirectional audio, discreet sensor inputs, and control system outputs.
5. All camera signals shall be compressed, encoded, and delivered onto the network for processing and control by the IP video-management software.
6. Camera system units shall be ruggedly built and designed for extreme adverse environments, complying with NEMA Type environmental standards.
7. Encoder/decoder combinations shall place video, audio, and data network stream that can be managed from multiple workstations on the user's LAN or WAN.
8. All system interconnect cables, workstation PCs, PTZ joysticks, and network intermediate devices shall be provided for full performance of specified system.
9. The Trade Contractor shall provide an additional capacity of 10% within the video surveillance system for future expansion.

2.3 STANDARD CAMERAS

A. Manufacturers: Subject to compliance with requirements, provide products by Axis Communications.

B. Color Dome Camera: Assembled and tested as a manufactured unit, containing dome assembly, color camera, motorized pan and tilt, zoom lens, and receiver/driver.

1. Comply with UL 639.
2. CCD : 1 Megapixel minimum. Signal-to-Noise Ratio: Not less than 50 dB, with camera AGC off.
3. With AGC, manually selectable on or off.
4. Manually selectable modes for backlight compensation or normal lighting.
5. Power cameras using Power over Ethernet.

C. Interior Cameras – Fixed (Mark FW)

1. Fixed lens.
2. Wall mounted, semi flush, provide backbox and adapter ring.

3. Provide Axis P3364V series.

D. Interior Cameras – Fixed (Mark FC)

1. Same as Mark FW, except ceiling mounted.

2. Ceiling, flush mounted provide Axis recessed mounting kit

E. Interior Cameras – Fixed Stem (Mark FS)

1. Same as Mark FW, except stem mounted.

2. Stem mounted from structure, provide Axis pendent mount attached to structure with ¾" rigid galvanized steel conduit and ball mount.

F. Exterior Cameras – Fixed Wall/Ceiling (Mark FWW)

1. Sensitivity: Camera shall provide usable images in low-light conditions, delivering an image at a scene illumination of 0.1 lux at F1.2 (color) and 0.02 lux @ F1.4 BW.

2. Weatherproof dome enclosure.

3. Provide Axis T91B61 wall mount

4. Provide Axis P3364VE series.

G. Exterior Cameras – Fixed Parapet (Mark FGW)

1. Same as Mark FWW, except mounted on swing arm parapet mount.
2. Parapet mount shall be Aluminum, swivel base, 3' swing, wall bracket, Aigis Mechtronics MT9230 or equal.
3. Mount to roof side of parapet.

H. Exterior Cameras – Fixed Pedestal (Mark FPDW)

1. Same as Mark FWW, except mounted flush in pedestal.
2. Mount flush in pedestal head per drawings.

I. Exterior Camera – Pan, Tilt, Zoom-WALL (Mark PZWW)

1. Sensitivity: Camera shall provide usable images in low-light conditions, delivering an image at a scene illumination of 0.5 lux at F1.4 (color) and 0.008 lux @ F1.4 BW.

2. Direct-drive motor, 360-degree rotation angle, and 180-degree tilt angle. Pan-and-tilt speed shall be controlled by operator. Movement from preset positions shall be not less than 300 degrees per second.

3. Preset Positioning: Eight user-definable scenes, each allowing 16-character titles. Controls shall include the following:

   a. In "sequence mode," camera shall continuously sequence through preset positions, with dwell time and sequencing under operator control.

   b. Motion detection shall be available at each camera position.

   c. Up to four preset positions may be selected to be activated by an alarm. Each of the alarm positions may be programmed to output a response signal.

4. Provide Axis T91B61 wall mount.

5. Provide Axis Q6042-E series.

J. Exterior Camera – Pan, Tilt, Zoom – Pole (Mark PZPW)

a. Same as Mark PZWW, except pole mounted.

2. Mount Axis T91A67, strapped to pole with stainless steel straps.

3. Provide Axis Q6042-E series.

K. Exterior Camera – Pan, Tilt, Zoom – Parapet (Mark PZGW)

1. Same as Mark PZWW, except mounted on swing arm parapet mount.
2. Parapet mount shall be Aluminum, swivel base, 3' swing, wall bracket, Aigis Mechtronics MT9230 or equal.
3. Mount to roof side of parapet.

2.4 MIDSPAN

A. Provide High power over Ethernet midspan to power PTZ cameras.

B. Basis of design: Axis T8 series, mounted on rack shelf.

2.5 NETWORK VIDEO RECORDER

A. Storage: Internal 9TB hard disk drive.

B. Recording: Video and audio recording over TCP/IP network. Video recording of MPEG-2 and MPEG-4 streams. Video recording up to 48 Mbps for internal storage.

C. Duplex Operation: Simultaneous recording and playback.

D. Event Recording: Continuous and alarm-based recording.

E. Search Capabilities: Search based on camera, time, or date.

F. Watermark: Digital certification by watermarking.

G. LAN/WEB: Full integration with 1000 Base-T LAN, Intranet, or Internet through standard Web browser or video management software. Integrated Web server FTP server functionality and integrate with campus video systems.

H. Capacity: Supports up to 64 digital devices.

I. Manufacturer: Subject to compliance with requirements, provide Pelco Digital Sentry.

2.6 WORKSTATION

A. Provide notebook computer with rackmount. Provide the following as a minimum

B. Monitor size: 15", 3200x1800 resolution, touch screen.

C. Processor: Intel i7, 3.0 GHz

D. Memory: 16GB RAM, 512GB solid state drive.

E. Operating System: Windows 8

F. Mounting: Rack

G. Basis of design: Dell, XPS 15 with Mid-Atlantic SS4-23VTR shelf.

2.7 NETWORK SWITCH

A. Provide 10/100/1000 Base T network switch with PoE+ per port with the following features as a minimum:

B. Backbone: Single Mode, 10 Gigabit SFP for uplink connection to backbone.

C. Ports: Provide number of10/100/1000 Base T ports shown on the drawings in increments of 24 ports.

D. Software: Cisco software licenses for IP-Lite routing software.

E. Basis of design: CISCO 2960-X series with 1025W power supply.

F. Coordination: Program switch in cooperation with MNR IT department.

2.8 MEDIA CONVERTER

A. Fiber to Ethernet

1. Fiber: Single Mode, 100BASE-FX
2. Ethernet: 10/100BAS-T
3. DC powered.
4. DIN rail mounted, 6 unit with wire management

B. Basis of design: Transition networks SISTF101x series with Rackmount RBC1112 6U DIN mount

2.9 RACK POWER SUPPLY

A. Provide 24VDC rack mounted power supply for media converters.

B. Capacity: 16amps

C. Output: PTC per output.

D. Input voltage 120V

E. Basis of design Alronix VertiLine63D

2.10 SURGE PROTECTOR (POE)

A. Capacity: 16 Port, Power Over Ethernet

B. Jacks: RJ45 Jacks in and out.

C. Mounting: Rack Mounted.

D. Basis of design: Nitek IPPWR16

2.11 SURGE PROTECTOR (CAMERA POWER)

A. Provide DIM mounted surge protectors for all 24VDC circuits existing the building. Provide protectors on both end of circuit.

B. Type: MOV

C. Voltage: 24VDC nominal

D. Surge Capacity: 2.5KA

E. Termination: Screw

F. Mounting: Rack on rack mounted DIN rail or chassis DIN rail at camera.

G. Basis of design: Transtector I^2R ICP series with Rackmount RBC series 2U DIN mount.

2.12 UNINTERRUPTABLE POWER SUPPLY (UPS)

A. Type: On Line, double conversion

B. 3000VA Capacity.

C. Input/Output Voltages: 120V/120V

D. Standby Time: 5 min at rated capacity

E. SMTP Interface

F. Rack mounted.

G. Provide APC Smart-UPS RT 3000VA Rm 120V

2.13 PATCH PANEL:

A. Provide patch panels in accordance with Communications Horizontal Cabling, Section 27 15 00.

2.14 CABINETS

2.15 EQUIPMENT FRAMES

A. Manufacturers: Subject to compliance with requirements, provide products by one of the following:
   1. Great Lakes

B. General Frame Requirements:

   1. Distribution Frames: Freestanding modular-steel units designed for telecommunications terminal support and coordinated with dimensions of units to be supported.
   2. Module Dimension: Width compatible with EIA 310-D standard, 19-inch (480-mm) panel mounting.
   3. Finish: Manufacturer's standard, baked-polyester powder coat.

C. Floor-Mounted Racks: Modular-type, steel construction.

   1. Vertical and horizontal cable management channels, top and bottom cable troughs, grounding lug, and a power strip.

   2. 12” wide rail with threaded mounting holes.
   3. Baked-polyester powder coat finish.
   4. 54 mounting units.
   5. Provide cable rings for vertical cable management, 16 minimum.
   6. Provide with water falls for cables.
   7. Provide Great Lakes, Cable Management Rack series.

D. Cable Management for Equipment Frames:

   1. Metal, with integral wire retaining fingers.
   2. Baked-polyester powder coat finish.
   3. Provide horizontal crossover cable manager at the top of each relay rack, with a minimum height of two rack units each.

2.16 ENCLOSURES

A. Stainless steel, continuous hinge, NEMA 4, with wood backborad, 3 point latch, size as noted on drawings for pole mounted camera electronics Minimum 12 inches x 12 inches x 6 inches.

B. Provide strap type pole mount.

C. Basis of design: Hoffman Inline series.

PART 3 - EXECUTION

3.1 EXAMINATION

A. Examine pathway elements intended for cables. Check raceways and other elements for compliance with space allocations, installation tolerance, hazards to camera installation, and other conditions affecting installation.

B. Examine roughing-in for LAN, WAN, and IP network before device installation.

C. Proceed with installation only after unsatisfactory conditions have been corrected.

3.2 WIRING

A. Comply with requirements in Division 26 Section "Raceway and Boxes for Electrical Systems."

B. Wiring Method: Install cables in raceways unless otherwise indicated.

1. Except raceways are not required in accessible indoor ceiling spaces and attics.
2. Except raceways are not required in hollow gypsum board partitions.
3. Conceal raceways and wiring except in unfinished spaces.

C. Wiring within Enclosures: Bundle, lace, and train conductors to terminal points with no excess and without exceeding manufacturer's limitations on bending radii. Provide and use lacing bars and distribution spools.

D. Splices, Taps, and Terminations: For power and control wiring, use numbered terminal strips in junction, pull, and outlet boxes; terminal cabinets; and equipment enclosures. Tighten electrical connectors and terminals according to manufacturer's published torque-tightening values. If manufacturer's torque values are not indicated, use those specified in UL 486A-486B.

E. For LAN connection and fiber-optic and copper communication wiring, comply with Division 27 Sections "Communications Backbone Cabling" and "Communications Horizontal Cabling."

F. Grounding: Provide independent-signal circuit grounding recommended in writing by manufacturer.

3.3 CCTV CAMERA LOCATION SURVEY

A. Survey camera locations and be responsible to insure that the selected locations will provide optimum pictures of the areas to be viewed. To conduct the survey, provide a portable camera(s), variety of suitable lenses, PC, portable power supply to power the equipment and adjustable height pole(s) to mount cameras. This equipment and material shall remain the Contractor’s property. This survey shall be completed before final camera placement.

1. Coordinate with owner’s security department and have present at all surveys.
2. Survey the camera locations to determine the appropriate mounts according to the existing field conditions at each location. Note views and camera settings after owner reviews camera view.

3. Prepare survey forms to document information, such as names of participants, date of survey, camera location information, lens settings, view settings as a minimum.
    a. Submit the form for approval in hard copy and PDF format.
    b. Submit the survey schedule for approval.
    c. Conduct the survey in the presence of the Engineer and Owners security department, in accordance with the approved schedule.
4. Adjustments within same room or +/- 2’ on exterior walls and poles shall be done at no cost to the owner.

3.4 VIDEO SURVEILLANCE SYSTEM INSTALLATION

A. Install cameras level and plumb.

B. Install cameras with 84-inch- (2134-mm-) minimum clear space below cameras and their mountings. Change type of mounting to achieve required clearance.

C. Set pan unit and pan-and-tilt unit stops to suit final camera position and to obtain the field of view required for camera. Connect all controls and alarms, and adjust.

D. Install power supplies and other auxiliary components at control stations unless otherwise indicated.

E. Install tamper switches on components indicated to receive tamper switches, arranged to detect unauthorized entry into system-component enclosures and mounted in self-protected, inconspicuous positions.

F. Identify system components, wiring, cabling, and terminals according to Division 26 Section "Identification for Electrical Systems."

3.5 FIELD QUALITY CONTROL

A. Testing Agency: Engage a qualified testing agency to perform tests and inspections.

B. Manufacturer's Field Service: Engage a factory-authorized service representative to inspect, test, and adjust components, assemblies, and equipment installations, including connections.

C. Perform tests and inspections.

1. Manufacturer's Field Service: Engage a factory-authorized service representative to inspect components, assemblies, and equipment installations, including connections, and to assist in testing.

D. Tests and Inspections:

1. Inspection: Verify that units and controls are properly installed, connected, and labeled, and that interconnecting wires and terminals are identified.

2. Pretesting: Align and adjust system and pretest components, wiring, and functions to verify that they comply with specified requirements. Conduct tests at varying lighting levels, including day and night scenes as applicable. Prepare video-surveillance equipment for acceptance and operational testing as follows:

a. Prepare equipment list described in "Informational Submittals" Article.

b. Verify operation of auto-iris lenses.

c. Set back-focus of fixed focal length lenses. At focus set to infinity, simulate nighttime lighting conditions by using a dark glass filter of a density that produces a clear image. Adjust until image is in focus with and without the filter.

d. Set back-focus of zoom lenses. At focus set to infinity, simulate nighttime lighting conditions by using a dark glass filter of a density that produces a clear image. Additionally, set zoom to full wide angle and aim camera at an object 50 to 75 feet (17 to 23 m) away. Adjust until image is in focus from full wide angle to full telephoto, with the filter in place.

e. Set and name all preset positions; consult Owner's personnel.

f. Set sensitivity of motion detection.

g. Connect and verify responses to alarms.

h. Verify operation of control-station equipment.

3. Test Schedule: Schedule tests after pretesting has been successfully completed and system has been in normal functional operation for at least 14 days. Provide a minimum of 10 days' notice of test schedule.

4. Operational Tests: Perform operational system tests to verify that system complies with Specifications. Include all modes of system operation. Test equipment for proper operation in all functional modes.

E. Video surveillance system will be considered defective if it does not pass tests and inspections.

F. Prepare test and inspection reports.

3.6 ADJUSTING

A. Occupancy Adjustments: When requested within 12 months of date of Substantial Completion, provide on-site assistance in adjusting system to suit actual occupied conditions. Provide up to two visits to Project during other-than-normal occupancy hours for this purpose. Tasks shall include, but are not limited to, the following:

1. Check cable connections.

2. Check proper operation of cameras and lenses. Verify operation of auto-iris lenses and adjust back-focus as needed.

3. Adjust all preset positions; consult Owner's personnel.

4. Recommend changes to cameras, lenses, and associated equipment to improve Owner's use of video surveillance system.

5. Provide a written report of adjustments and recommendations.

3.7 CLEANING

A. Clean installed items using methods and materials recommended in writing by manufacturer.

B. Clean video-surveillance-system components, including camera-housing windows, lenses, and monitor screens.

3.8 DEMONSTRATION

A. Train Owner's maintenance personnel to adjust, operate, and maintain video-surveillance equipment.

END OF SECTION 28 23 00

SECTION 28 31 11 - DIGITAL, ADDRESSABLE FIRE-ALARM SYSTEM

PART 1 - GENERAL

1.1 RELATED DOCUMENTS

A. Drawings and general provisions of the Trade Contract, including General and Supplementary Conditions, Division 01 Specification Sections, and Division 26 Sections apply to this Section.

1.2 SUMMARY

A. Section Includes:

1. Fire-alarm control unit (Siemens).
2. Manual fire-alarm boxes.
3. System smoke detectors.
4. Heat detectors.
5. Notification appliances.
6. Addressable interface device.
7. Digital alarm communicator transmitter.

B. Related Requirements:

1. Division 26, “Basic Electrical Requirements” for submittals.
2. Division 28 Section "Conductors and Cables for Electronic Safety and Security" for fire alarm conductors.
3. Division 28 Section, ”Access Control”

1.3 DEFINITIONS

A. LED: Light-emitting diode.

B. NICET: National Institute for Certification in Engineering Technologies.

1.4 SYSTEM DESCRIPTION

A. Noncoded, FMG-placarded addressable system, with multiplexed signal transmission, dedicated to fire-alarm service only.

1.5 PERFORMANCE REQUIREMENTS

A. Seismic Performance: Fire-alarm control unit and raceways shall withstand the effects of earthquake motions determined according to SEI/ASCE 7.

1. The term "withstand" means "the unit will remain in place without separation of any parts from the device when subjected to the seismic forces specified".

1.6 ACTION SUBMITTALS

A. Product Data: For each type of product indicated.

B. Shop Drawings: For fire-alarm system. Include plans, elevations, sections, details, and attachments to other work.

1. Comply with recommendations in the "Documentation" Section of the "Fundamentals of Fire Alarm Systems" Chapter in NFPA 72.
2. Include voltage drop calculations for notification appliance circuits.
3. Include battery-size calculations.
4. Include performance parameters and installation details for each detector, verifying that each detector is listed for complete range of air velocity, temperature, and humidity possible when air-handling system is operating.
5. Include plans, sections, and elevations of heating, ventilating, and air-conditioning ducts, drawn to scale and coordinating installation of duct smoke detectors and access to them. Show critical dimensions that relate to placement and support of sampling tubes, detector housing, and remote status and alarm indicators. Locate detectors according to manufacturer's written recommendations.
6. Include voice/alarm signaling-service equipment rack or console layout, grounding schematic, amplifier power calculation, and single-line connection diagram.
7. Include floor plans to indicate final outlet locations showing address of each addressable device. Show size and route of cable and conduits.
8. Show all devices on riser diagram.

C. General Submittal Requirements:

1. Submittals shall be approved by authorities having jurisdiction prior to submitting them to CTDOT PM.
2. Shop Drawings shall be prepared by persons with the following qualifications:

   a. Trained and certified by manufacturer in fire-alarm system design.
   b. NICET-certified fire-alarm technician, Level III minimum.
   c. Licensed or certified by authorities having jurisdiction.

1.7 INFORMATIONAL SUBMITTALS

A. Qualification Data: For qualified Installer.

B. Seismic Qualification Certificates: For fire-alarm control unit, accessories, and components, from manufacturer.

1. Basis for Certification: Indicate whether withstand certification is based on actual test of assembled components or on calculation.

2. Dimensioned Outline Drawings of Equipment Unit: Identify center of gravity and locate and describe mounting and anchorage provisions.

3. Detailed description of equipment anchorage devices on which the certification is based and their installation requirements.

C. Field quality-control reports.

1.8 CLOSEOUT SUBMITTALS

A. Operation and Maintenance Data: For fire-alarm systems and components to include in emergency, operation, and maintenance manuals. In addition to items specified in Division 01 Section "Operation and Maintenance Data," deliver copies to authorities having jurisdiction and include the following:

1. Comply with the "Records" Section of the "Inspection, Testing and Maintenance" Chapter in NFPA 72.

2. Provide "Record of Completion Documents" according to NFPA 72 article "Permanent Records" in the "Records" Section of the "Inspection, Testing and Maintenance" Chapter.

3. Record copy of site-specific software.

4. Provide "Maintenance, Inspection and Testing Records" according to NFPA 72 article of the same name and include the following:

a. Frequency of testing of installed components.
b. Frequency of inspection of installed components.
c. Requirements and recommendations related to results of maintenance.
d. Manufacturer's user training manuals.

5. Manufacturer's required maintenance related to system warranty requirements.

6. Abbreviated operating instructions for mounting at fire-alarm control unit.

B. Software and Firmware Operational Documentation:

1. Software operating and upgrade manuals.

2. Program Software Backup: On magnetic media or compact disk, complete with data files.

3. Device address list.

4. Printout of software application and graphic screens.

1.9 QUALITY ASSURANCE

A. Installer Qualifications: Installation shall be by personnel certified by NICET as fire-alarm Level II technician.

B. Source Limitations for Fire-Alarm System and Components: Obtain fire-alarm system from single source from single manufacturer. Components shall be compatible with, and operate as, an extension of existing system.

C. Electrical Components, Devices, and Accessories: Listed and labeled as defined in NFPA 70, by a qualified testing agency, and marked for intended location and application.

D. NFPA Certification: Obtain certification according to NFPA 72 in the form of a placard by an FMG-approved alarm company.

1.10 SOFTWARE SERVICE AGREEMENT

A. Comply with UL 864.

B. Technical Support: Beginning with Substantial Completion, provide software support for two years.

C. Upgrade Service: Update software to latest version at Project completion. Install and program software upgrades that become available within two years from date of Substantial Completion. Upgrading software shall include operating system. Upgrade shall include new or revised licenses for use of software.

1. Provide 30 days' notice to Owner to allow scheduling and access to system and to allow Owner to upgrade computer equipment if necessary.

PART 2 - PRODUCTS

2.1 MANUFACTURER

A. Provide products matching exiting Siemens fire alarm system on campus at CCO building.

2.2 SYSTEMS OPERATIONAL DESCRIPTION

A. Fire-alarm signal initiation shall be by one or more of the following devices:

1. Manual stations.
2. Heat detectors.
3. Smoke detectors.
4. Duct smoke detectors.
5. Automatic sprinkler system water flow.
6. Fire-extinguishing system operation.
7. Fire standpipe system.

B. Fire-alarm signal shall initiate the following actions:

1. Continuously operate alarm notification appliances.

2. Identify alarm at fire-alarm control unit.
3. Transmit an alarm signal to the remote alarm receiving station.
4. Unlock electric door locks in designated egress paths.
5. Switch heating, ventilating, and air-conditioning equipment controls to fire-alarm mode.
6. Close smoke dampers in air ducts of designated air-conditioning duct systems.
7. Recall elevators to primary or alternate recall floors.
8. Record events in the system memory.

C. Supervisory signal initiation shall be by one or more of the following devices and actions:
1. Valve supervisory switch.
2. Low-air-pressure switch of a dry-pipe sprinkler system.
3. Elevator shunt-trip supervision.

D. System trouble signal initiation shall be by one or more of the following devices and actions:
1. Open circuits, shorts, and grounds in designated circuits.
2. Opening, tampering with, or removing alarm-initiating and supervisory signal-initiating devices.
3. Loss of primary power at fire-alarm control unit.
4. Ground or a single break in fire-alarm control unit internal circuits.
5. Abnormal ac voltage at fire-alarm control unit.
6. Break in standby battery circuitry.
7. Failure of battery charging.
8. Abnormal position of any switch at fire-alarm control unit or annunciator.
9. Low-air-pressure switch operation on a dry-pipe or preaction sprinkler system.

E. System Trouble and Supervisory Signal Actions: Initiate notification appliance and annunciate at fire-alarm control unit and remote annunciators. Record the event on system printer.

2.3 FIRE-ALARM CONTROL UNIT

A. General Requirements for Fire-Alarm Control Unit:
1. Field-programmable, microprocessor-based, modular, power-limited design with electronic modules, complying with UL 864 and listed and labeled by an NRTL.
   a. System software and programs shall be held in flash electrically erasable programmable read-only memory (EEPROM), retaining the information through failure of primary and secondary power supplies.
   b. Include a real-time clock for time annotation of events on the event recorder and printer.
2. Addressable initiation devices that communicate device identity and status.

a. Smoke sensors shall additionally communicate sensitivity setting and allow for adjustment of sensitivity at fire-alarm control unit.
b. Temperature sensors shall additionally test for and communicate the sensitivity range of the device.

3. Addressable control circuits for operation of mechanical equipment.

B. Alphanumeric Display and System Controls: Arranged for interface between human operator at fire-alarm control unit and addressable system components including annunciation and supervision. Display alarm, supervisory, and component status messages and the programming and control menu.

1. Annunciator and Display: Liquid-crystal type, 6” display. Provide Siemens PMI series.

2. Keypad: Arranged to permit entry and execution of programming, display, and control commands.

C. Internally mounted printer for event logging.

D. Circuits:

1. Initiating Device, Notification Appliance, and Signaling Line Circuits: NFPA 72, Class B.

a. Initiating Device Circuits: Class B
b. Notification Appliance Circuits: Style Y.
c. Signaling Line Circuits: Style 4.
d. Install no more than 50 addressable devices on each signaling line circuit.

2. Serial Interfaces: Two RS-232 ports for printers.

E. Smoke-Alarm Verification:

1. Initiate audible and visible indication of an "alarm-verification" signal at fire-alarm control unit.

2. Activate an NRTL-listed and -approved "alarm-verification" sequence at fire-alarm control unit and detector.

3. Sound general alarm if the alarm is verified.

4. Cancel fire-alarm control unit indication and system reset if the alarm is not verified.

F. Notification Appliance Circuit: Operation shall sound in a Code 3 Temporal

G. Elevator Recall:

1. Smoke detectors at the following locations shall initiate automatic elevator recall.

a. Elevator lobby detectors except the lobby detector on the designated floor.
b. Smoke detector in elevator machine room.
c. Smoke detectors in elevator hoistway.

2. Elevator lobby detectors located on the designated recall floors shall be programmed to move the cars to the alternate recall floor.

3. Water-flow alarm connected to sprinkler in an elevator shaft and elevator machine room shall shut down elevators associated with the location without time delay.

   a. Water-flow switch associated with the sprinkler in the elevator pit may have a delay to allow elevators to move to the designated floor.

H. Remote Smoke-Detector Sensitivity Adjustment: Controls shall select specific addressable smoke detectors for adjustment, display their current status and sensitivity settings, and change those settings. Allow controls to be used to program repetitive, time-scheduled, and automated changes in sensitivity of specific detector groups.

I. Transmission to Remote Alarm Receiving Station: Automatically transmit alarm, supervisory, and trouble signals to a remote alarm station.

2.4 MANUAL FIRE-ALARM BOXES

A. General Requirements for Manual Fire-Alarm Boxes: Comply with UL 38. Boxes shall be finished in red with molded, raised-letter operating instructions in contrasting color; shall show visible indication of operation; and shall be mounted on recessed outlet box. If indicated as surface mounted, provide manufacturer's surface back box.

   1. Double-action mechanism requiring two actions to initiate an alarm, pull-lever type; with integral addressable module arranged to communicate manual-station status (normal, alarm, or trouble) to fire-alarm control unit.

   2. Station Reset: Key- or wrench-operated switch.

   3. Indoor Protective Shield: Factory-fabricated clear plastic enclosure hinged at the top to permit lifting for access to initiate an alarm. Lifting the cover actuates an integral battery-powered audible horn intended to discourage false-alarm operation.

   4. Weatherproof Protective Shield: Factory-fabricated clear plastic enclosure hinged at the top to permit lifting for access to initiate an alarm.

B. Provide Siemens MSM series.

2.5 SYSTEM SMOKE DETECTORS

A. General Requirements for System Smoke Detectors:

   1. Comply with UL 268; operating at 24-V dc, nominal.

   2. Detectors shall be two-wire type.

   3. Integral Addressable Module: Arranged to communicate detector status (normal, alarm, or trouble) to fire-alarm control unit.

   4. Base Mounting: Detector and associated electronic components shall be mounted in a twist-lock module that connects to a fixed base. Provide terminals in the fixed base for connection to building wiring.

   5. Self-Restoring: Detectors do not require resetting or readjustment after actuation to restore them to normal operation.

6. Integral Visual-Indicating Light: LED type indicating detector has operated.

7. Remote Control: Unless otherwise indicated, detectors shall be analog-addressable type, individually monitored at fire-alarm control unit for calibration, sensitivity, and alarm condition and individually adjustable for sensitivity by fire-alarm control unit.

    a. Rate-of-rise temperature characteristic shall be selectable at fire-alarm control unit for 15 or 20 deg F (8 or 11 deg C) per minute.
    b. Fixed-temperature sensing shall be independent of rate-of-rise sensing and shall be settable at fire-alarm control unit to operate at 135 or 155 deg F (57 or 68 deg C).
    c. Provide multiple levels of detection sensitivity for each sensor.

B. Photoelectric Smoke Detectors:

1. Detector address shall be accessible from fire-alarm control unit and shall be able to identify the detector's location within the system and its sensitivity setting.

2. An operator at fire-alarm control unit, having the designated access level, shall be able to manually access the following for each detector:

    a. Primary status.
    b. Device type.
    c. Present average value.
    d. Present sensitivity selected.
    e. Sensor range (normal, dirty, etc.).
    f. Provide Siemens HFP series.

C. Duct Smoke Detectors: Photoelectric type complying with UL 268A.

1. Detector address shall be accessible from fire-alarm control unit and shall be able to identify the detector's location within the system and its sensitivity setting.

2. An operator at fire-alarm control unit, having the designated access level, shall be able to manually access the following for each detector:

    a. Primary status.
    b. Device type.
    c. Present average value.
    d. Present sensitivity selected.
    e. Sensor range (normal, dirty, etc.).

3. Weatherproof Duct Housing Enclosure: NEMA 250, Type 4X; NRTL listed for use with the supplied detector.

4. Each sensor shall have multiple levels of detection sensitivity.

5. Sampling Tubes: Design and dimensions as recommended by manufacturer for specific duct size, air velocity, and installation conditions where applied.

6. Relay Fan Shutdown: Rated to interrupt fan motor-control circuit.

7. Provide Siemens AD2 series with relay.

2.6 HEAT DETECTORS

A. General Requirements for Heat Detectors: Comply with UL 521.

B. Heat Detector, Combination Type: Actuated by either a fixed temperature of 135 deg F (57 deg C) or a rate of rise that exceeds 15 deg F (8 deg C) per minute unless otherwise indicated.

1. Mounting: Twist-lock base interchangeable with smoke-detector bases.

2. Integral Addressable Module: Arranged to communicate detector status (normal, alarm, or trouble) to fire-alarm control unit.

3. Provide Siemens HFPT series.

2.7 NOTIFICATION APPLIANCES

A. General Requirements for Notification Appliances: Connected to notification appliance signal circuits, zoned as indicated, equipped for mounting as indicated and with screw terminals for system connections.

1. Combination Devices: Factory-integrated audible and visible devices in a single-mounting assembly, equipped for mounting as indicated and with screw terminals for system connections.

B. Horns: Piezo-Electric polarized type, 24-V dc; with provision for housing the operating mechanism behind a grille. Comply with UL 464. Horns shall produce a sound-pressure level of 95 dBA, unless shown otherwise on the drawings, measured 10 feet (3 m) from the horn, using the coded signal prescribed in UL 464 test protocol.

C. Visible Notification Appliances: Xenon strobe lights comply with UL 1971, with clear or nominal white polycarbonate lens mounted on an aluminum faceplate. The word "FIRE" is engraved in minimum 1-inch- (25-mm-) high letters on the lens.

1. Rated Light Output:
   a. 15/30/75/110 cd, selectable in the field.

2. Mounting: Wall mounted unless otherwise indicated.

3. For units with guards to prevent physical damage, light output ratings shall be determined with guards in place.

4. Flashing shall be in a temporal pattern, synchronized with other units.

5. Strobe Leads: Factory connected to screw terminals.

6. Mounting Faceplate: Factory finished, red.

2.8 ADDRESSABLE INTERFACE DEVICE

A. Monitor module: NRTL listed for use in providing a system address for alarm-initiating devices for wired applications with normally open contacts. Provide Siemens HTRI series

B. Integral Relay: Capable of providing a direct signal to circuit-breaker shunt trip for power shutdown. Provide Siemens HTRI series

2.9 DIGITAL ALARM COMMUNICATOR TRANSMITTER

A. Digital alarm communicator transmitter shall be acceptable to the remote central station and shall comply with UL 632 and be listed and labeled by an NRTL.

B. Functional Performance: Unit shall receive an alarm, supervisory, or trouble signal from fire-alarm control unit and automatically capture two telephone line(s) and dial a preset number for a remote central station. When contact is made with central station(s), signals shall be transmitted. If service on[either] line is interrupted for longer than 45 seconds, transmitter shall initiate a local trouble signal and transmit the signal indicating loss of telephone line to the remote alarm receiving station over the remaining line. Transmitter shall automatically report telephone service restoration to the central station. If service is lost on both telephone lines, transmitter shall initiate the local trouble signal.

C. Local functions and display at the digital alarm communicator transmitter shall include the following:

1. Verification that both telephone lines are available.
2. Programming device.
3. LED display.
4. Manual test report function and manual transmission clear indication.
5. Communications failure with the central station or fire-alarm control unit.

D. Secondary Power: Integral rechargeable battery and automatic charger.

E. Self-Test: Conducted automatically every 24 hours with report transmitted to central station.

2.10 DEVICE GUARDS

A. Description: Welded wire mesh of size and shape for the manual station, smoke detector, gong, or other device requiring protection.

1. Factory fabricated and furnished by manufacturer of device.
2. Finish: Paint of color to match the protected device.

PART 3 - EXECUTION

3.1 EQUIPMENT INSTALLATION

A. Comply with NFPA 72 for installation of fire-alarm equipment.

B. Install wall-mounted equipment, with tops of cabinets not more than 72 inches (1830 mm) above the finished floor.

1. Comply with requirements for seismic-restraint devices specified in Division 26 Section "Vibration and Seismic Controls for Electrical Systems."

C. Smoke- or Heat-Detector Spacing:

1. Comply with NFPA 72, "Smoke-Sensing Fire Detectors" Section in the "Initiating Devices" Chapter, for smoke-detector spacing.

2. Comply with NFPA 72, "Heat-Sensing Fire Detectors" Section in the "Initiating Devices" Chapter, for heat-detector spacing.

3. Smooth ceiling spacing shall not exceed 30 feet (9 m).

4. Spacing of detectors for irregular areas, for irregular ceiling construction, and for high ceiling areas shall be determined according to Appendix A in NFPA 72.

5. HVAC: Locate detectors not closer than 3 feet (1 m) from air-supply diffuser or return-air opening.

6. Lighting Fixtures: Locate detectors not closer than 12 inches (300 mm) from any part of a lighting fixture.

D. Duct Smoke Detectors: Comply with NFPA 72 and NFPA 90A. Install sampling tubes so they extend the full width of duct. Coordinate installation with Mechanical. Detectors installed by Mechanical Trade provided by Fire-Alarm Trade, wired by Fire Alarm Trade.

E. Heat Detectors in Elevator Shafts: Coordinate temperature rating and location with sprinkler rating and location.

F. Remote Status and Alarm Indicators: Install near each smoke detector and each sprinkler water-flow switch and valve-tamper switch that is not readily visible from normal viewing position.

G. Audible Alarm-Indicating Devices: Install not less than 6 inches (150 mm) below the ceiling. Install bells and horns on flush-mounted back boxes with the device-operating mechanism concealed behind a grille.

H. Visible Alarm-Indicating Devices: Install adjacent to each alarm bell or alarm horn and at least 6 inches (150 mm) below the ceiling.

I. Device Location-Indicating Lights: Locate in public space near the device they monitor.

J. Fire-Alarm Control Unit: Surface mounted, with tops of cabinets not more than 72 inches (1830 mm) above the finished floor.

K. Annunciator: Install with top of panel not more than 72 inches (1830 mm) above the finished floor.

3.2 CONNECTIONS

A. For fire-protection systems related to doors in fire-rated walls and partitions and to doors in smoke partitions, comply with requirements in Division 08 Section "Door Hardware." Connect hardware and devices to fire-alarm system.

1. Verify that hardware and devices are NRTL listed for use with fire-alarm system in this Section before making connections.

B. Make addressable connections with a supervised interface device to the following devices and systems. Install the interface device less than 3 feet (1 m) from the device controlled. Make an addressable confirmation connection when such feedback is available at the device or system being controlled.

1. Alarm-initiating connection to smoke-control system (smoke management) at firefighter smoke-control system panel.
2. Alarm-initiating connection to stairwell and elevator-shaft pressurization systems.
3. Smoke dampers in air ducts of designated air-conditioning duct systems.
4. Alarm-initiating connection to elevator recall system and components.
5. Alarm-initiating connection to activate emergency lighting control.
6. Alarm-initiating connection to activate emergency shutoffs for gas and fuel supplies.
7. Supervisory connections at valve supervisory switches.
8. Supervisory connections at low-air-pressure switch of each dry-pipe sprinkler system.
9. Supervisory connections at elevator shunt trip breaker.
10. Supervisory connections at fire-pump power failure including a dead-phase or phase-reversal condition.

3.3 IDENTIFICATION

A. Identify system components, wiring, cabling, and terminals. Comply with requirements for identification specified in Division 26 Section "Identification for Electrical Systems."

B. Install framed instructions in a location visible from fire-alarm control unit.

3.4 GROUNDING

A. Ground fire-alarm control unit and associated circuits; comply with IEEE 1100. Install a ground wire from main service ground to fire-alarm control unit.

3.5 FIELD QUALITY CONTROL

A. Field tests shall be witnessed by CTDOT PM.

B. Manufacturer's Field Service: Engage a factory-authorized service representative to inspect, test, and adjust components, assemblies, and equipment installations, including connections.

C. Perform tests and inspections.

1. Manufacturer's Field Service: Engage a factory-authorized service representative to inspect components, assemblies, and equipment installations, including connections, and to assist in testing.

D. Tests and Inspections:

1. Visual Inspection: Conduct visual inspection prior to testing.

    a. Inspection shall be based on completed Record Drawings and system documentation that is required by NFPA 72 in its "Completion Documents, Preparation" Table in the "Documentation" Section of the "Fundamentals of Fire Alarm Systems" Chapter.
    b. Comply with "Visual Inspection Frequencies" Table in the "Inspection" Section of the "Inspection, Testing and Maintenance" Chapter in NFPA 72; retain the "Initial/Reacceptance" column and list only the installed components.

2. System Testing: Comply with "Test Methods" Table in the "Testing" Section of the "Inspection, Testing and Maintenance" Chapter in NFPA 72.

3. Test audible appliances for the public operating mode according to manufacturer's written instructions. Perform the test using a portable sound-level meter complying with Type 2 requirements in ANSI S1.4.

4. Test audible appliances for the private operating mode according to manufacturer's written instructions.

5. Test visible appliances for the public operating mode according to manufacturer's written instructions.

6. Factory-authorized service representative shall prepare the "Fire Alarm System Record of Completion" in the "Documentation" Section of the "Fundamentals of Fire Alarm Systems" Chapter in NFPA 72 and the "Inspection and Testing Form" in the "Records" Section of the "Inspection, Testing and Maintenance" Chapter in NFPA 72.

7. Installation, acceptance testing and other testing of fire alarm system shall comply with FM Global Data Sheet 5-40.

E. Reacceptance Testing: Perform reacceptance testing to verify the proper operation of added or replaced devices and appliances.

F. Fire-alarm system will be considered defective if it does not pass tests and inspections.

G. Prepare test and inspection reports.

H. Maintenance Test and Inspection: Perform tests and inspections listed for weekly, monthly, quarterly, and semiannual periods. Use forms developed for initial tests and inspections.

I. Annual Test and Inspection: One year after date of Substantial Completion, test fire-alarm system complying with visual and testing inspection requirements in NFPA 72. Use forms developed for initial tests and inspections.

3.6 DEMONSTRATION

A. Train Owner's maintenance personnel to adjust, operate, and maintain fire-alarm system.

END OF SECTION 28 31 11

SECTION 31 11 00 – CLEARING AND GRUBBING

PART 1 GENERAL

1.1 SECTION INCLUDES

A. Clearing the ground of trees, stumps, brush, rubbish and all objectionable material in accordance with these specifications or as directed by the Engineer. This work shall also include the clearing of the ground necessary for the construction and installation of drainage, structures, ditches, channels, fences and other appurtenances. Included in this work shall be the preservation from injury or defacement of vegetation and objects designated to remain.

B. Removal of existing fences, trees, shrubs, signs, posts, bollards, bushes, stumps, fallen timber, logs, roots, refuse, trash and debris, including industrial and household items, and all other miscellaneous items not covered elsewhere in the Specifications. This item shall include all work within the New Haven Rail Yard and the project work area.

1.2 RELATED REQUIREMENTS

A. Section 02 41 13 Selective Site Demolition

B. Section 31 23 16 Excavation

C. Section 31 23 23 Fill for compacted granular fill requirements.

PART 2 PRODUCTS – NOT USED

PART 3 EXECUTION

3.1 EXAMINATION

A. Verify that erosion controls are installed and the area for clearing and grubbing as indicated on the plans is ready for the Work as indicated.

3.2 PREPARATION

A. Layout the location of the limits for items to be removed indicated on the plans for elements to be removed prior to demolition.

3.3 CONSTRUCTION METHODS

A. The Trade Contractor shall mark all trees, shrubs and plants to be removed in accordance with the plans and these specifications. The Engineer shall have 7 days to field review the markings

and make any adjustments prior to the start of the clearing operation. Within the excavation lines all trees shall be cut off and stumps removed to a depth of not less than 12 inches below the graded surface.

B. Within the fill lines where an embankment is to be made not more than 5 feet in depth, trees, stumps, roots, etc., shall be removed. Where the embankments to be made exceed 5 feet in depth, trees, stumps, roots, etc., shall be cut off to within 6 inches of the ground surface.

C. In areas where clearing is necessary for the construction and installation of various appurtenances, all trees and stumps shall be cut flush with the ground; and all dead or uprooted trees, brush, roots or otherwise objectionable material shall be removed as directed unless otherwise indicated on the plans.

D. Prior to clearing operations, a meeting must be held. Those attending the meeting should include the Trade Contractor, the Engineer, the designer, local tree warden or equivalent, and the District Environmental Coordinator. All clearing issues shall be resolved to the satisfaction of the Engineer before any trees are cut.

E. All trees scheduled to be removed outside of the proposed gutter or curblines shall be visibly marked or flagged by the Trade Contractor at least seven days prior to cutting of such trees.

F. The Engineer will inspect the identified trees within 7 days of the marking of the trees and verify the limits of clearing and grubbing prior to the Trade Contractor proceeding with his cutting operation.

G. All branches of trees extending within the roadway shall be trimmed as directed to provide a 16-foot minimum vertical clearance including selective trimming of such trees as directed.

Disposal of all such trees, stumps, brush, etc., shall be managed for beneficial reuse in accordance with the DEEP Brush & Stump Management Guidelines by companies registered under the DEEP recycling General Permit. The Trade Contractor shall coordinate with the Engineer as to whether any chipping of untreated wood can be reused on-site or must be managed off site.

H. The Trade Contractor shall dispose of all such trees, stumps, brush, etc., in a satisfactory manner and shall remove all rubbish and refuse from within the project limits.

I. All excavations made below subgrade surface by the removal of trees, stumps, etc., shall be filled with compacted granular fill, which shall be compacted thoroughly in accordance with the provisions governing formation of embankments.

J. All fences, stonewall fences and ornamental and utilitarian domestic accessories, such as, but not limited to garden pools, arbors, stair railings, fireplaces, sheds and incinerators, within the project limits shall be removed as directed.

K. All road signs, mail boxes, etc., shall be removed and reset as directed.

END OF SECTION 31 11 00

SECTION 31 22 16.23 – ROADWAY SUBGRADE FORMATION

PART 1 GENERAL

1.1 SECTION INCLUDES

A. The area upon which the pavement structure and paved shoulders are placed, including the shoulder base courses and subbase, shall be known as the subgrade. This is the plane coincident with the bottom of the subbase and the edge of pavement, as shown on the plans and cross sections or as ordered by the Engineer. The work of formation of subgrade shall be performed at this plane.

Where shoulders are to be reconstructed and the existing subbase is to remain, the work of formation of subgrade shall be performed at the plane coincident with the surface of the existing subbase.

After all grading has been substantially completed and all drains laid, the subgrade shall be brought to the lines, grades and cross-sections shown on the plans.

1.2 PROJECT CONDITIONS

A. Verify that survey bench mark and intended elevations for the Work are as indicated.

PART 2 PRODUCTS - NOT USED

PART 3 EXECUTION

3.1 EXAMINATION

A. Verify that survey bench mark and intended elevations for the work are as indicated.

3.2 PREPARATION

A. Identify required lines, levels, contours, and datum locations.

3.3 CONSTRUCTION METHOD

A. All soft and yielding material and other portions of the subgrade which will not compact readily shall be removed and replaced with suitable material.

B. In cut areas, the surface shall be uniformly compacted by use of equipment specifically manufactured for that purpose. Rollers shall deliver a ground pressure of not less than 300 pounds per linear inch of contact width and weigh not less than 10 tons. Vibratory units shall have a static weight of not less than 4 tons. The amount of compactive effort shall be as

directed by the Engineer, but in no case shall be less than four (4) complete passes of the compacting equipment being used.

C. The entire area of each layer of subgrade in the excavated areas shall be uniformly compacted to at least the required minimum density by use of compaction equipment consisting of rollers, compactors or a combination thereof. Earth-moving and other equipment not specifically manufactured for compaction purposes will not be considered as compaction equipment.

The dry density after compaction shall not be less than 95% of the dry density for that soil when tested in accordance with AASHTO T 180, Method D. Each layer of the embankment and the subgrade shall be compacted at optimum moisture content. No subsequent layer shall be placed until the specified compaction is obtained for the previous layer.

D. Where more than one compacting unit is to be used, that unit which exerts the larger compactive effort shall make the initial passes. Any portion of the subgrade not accessible to larger compacting units shall be compacted, as directed by the Engineer, to a degree equal to that obtained on the other portions of the subgrade with equipment and by methods appropriate to the size of the inaccessible area.

E. After compacting, the subgrade shall be true to required line and grade. There will be no direct payment for any materials required to bring the subgrade to the line, grade and cross-section shown on the plans.

F. The Trade Contractor shall protect the completed subgrade from damage by exercising such precautions as the Engineer deems necessary. The subgrade surface shall be maintained in such condition as to permit proper drainage. It shall be checked and approved by the Engineer prior to placing any pavement structure and shoulders thereon.

END OF SECTION 31 22 16.23

SECTION 31 23 16 - EXCAVATION

PART 1 GENERAL

1.1 SECTION INCLUDES

A. Removal and satisfactory disposal, in the manner herein required, of all material taken from within the limits of the work contracted for, the removal of which is necessary for the construction of the foundation, roadway, subgrade, shoulders, slopes, entrances, retaining walls, gutters, channels, swales and other miscellaneous construction to the dimensions and limits shown on the plans or as ordered and shall include the necessary excavation for pervious structure backfill outside of structure excavation limits. It shall also include the formation of embankments, the disposal of surplus or unsuitable material, removal of old foundations, concrete or masonry walls, crib walls, bin walls, railroad ties, stone wall fences or farm wall fences and filling of cellar or other holes, and in the absence of such items in the contract, the clearing and grubbing and the shaping and cleaning of slopes and of shoulders.

Classification: Roadway excavation shall be classified for the purpose of payment as "Earth," "Rock," "Channel Excavation—Earth," or "Channel Excavation—Rock," in accordance with the following definitions. The classifications applying to any particular project shall be as indicated on the proposal form.

Earth Excavation shall include all materials removed as indicated or directed except water, "Rock," "Channel Excavation—Earth," and "Channel Excavation—Rock."

Rock Excavation shall include rock in definite ledge formation and boulders, or the portion of boulders, one (1) cubic yard or more, in volume.

Channel Excavation—Earth shall include all materials other than water or "Channel Excavation—Rock" removed from the existing new or temporary water courses as indicated on the plans or as directed.

Channel Excavation—Rock shall include rock in definite ledge formation and boulders of one (1) cubic yard or more in volume removed from existing, new or temporary water courses, as indicated on the plans or as directed.

B. Structure Excavation: With the exceptions noted below, structure excavation shall include the removal of all material of whatever nature, the removal of which is necessary for the construction of foundations of buildings, oil water separators, holding and storage tanks, retaining walls outside the earth excavation payment limits, catenary structures, poles, and other structures shown on the plans; the placing of all necessary fill with the exception of pervious structure backfill hereinafter specified; and the wasting of excavated material which is not required for backfilling or embankment, or which is unsuitable for that purpose.

This item shall not include dewatering; the design and construction of cofferdams and related environmental controls used in dewatering operations required for the execution of the work; the repair, reconstruction and removal of cofferdams and related environmental controls used in dewatering operations; or the removal of all obstructions necessary for the construction of cofferdams.

"Structure Excavation—Earth" or "Structure Excavation—Rock" are defined as follows:

1. "Structure Excavation—Earth" shall include removal of all materials, other than water or "Structure Excavation—Rock."

2. "Structure Excavation—Rock" shall include the removal of rock in definite ledge formation; boulders or portions of boulders that have a volume of one (1) cubic yard or greater; the removal of existing concrete, site elements as listed in Section 02 41 13 Selective Site Demolition, shall be removed in accordance to that specification.

C. All excavated material within the project limits shall be handled in accordance with the requirements outlined within section 00 73 93 Environmental Health and Safety Requirements.

D. The Trade Contractor shall be aware that there are designated archaeological sites within the New Haven Rail Yard and the 152 Water Street work area. Excavations shall follow the following requirements where working within the New Haven Rail Yard and the 152 Water Street work area.

1. The Trade Contractor shall be alert to the possibility that, during the prosecution of the Project, significant archaeological or paleontological remains or other such materials may be uncovered. When archaeological or paleontological remains or other such materials are uncovered, the Trade Contractor shall immediately halt operations in the location of same and shall notify the Engineer of said discovery. The Trade Contractor shall make every effort to preserve archaeological or paleontological nature and importance of such materials in relation to one another and to the enclosing soil.

2. The Engineer shall have the authority to suspend Project work in the area of such discovery for the purpose of preserving, documenting, and recovering the archaeological or paleontological materials. The Trade Contractor shall carry out all instruction of the Engineer for the protection of such materials, including steps to protect the site from vandalism and unauthorized investigations, from accidental damage and from dangers such as heavy rainfall or runoff. The Trade Contractor shall reschedule its work to minimize any loss of time needed to complete the Project while the State of Connecticut evaluates, records, and salvages the archaeological or paleontological materials.

3. Extra work, ordered by the Engineer in this connection will be completed and delays caused by archaeological or paleontological preservation and protection, which the Trade Contractor demonstrates have delayed completion of the Project, will be treated under Section 01 26 00 Contract Modification Procedures.

1.2 RELATED REQUIREMENTS

A. Document Maintenance of Way & Employee Parking Soil and Rock Report: Geotechnical report; bore hole locations and findings of subsurface materials.

B. Section 00 73 93 – Environmental Health and Safety Requirements

C. Section 01 57 13 - Temporary Erosion and Sedimentation Control for Slope: protection and erosion control.

D. Section 01 77 00 - Closeout Procedures: General requirements for dewatering of excavations and water control.

E. Section 02 41 13 Selective Site Demolition, for related requirements.

F. Section 31 23 16.13 Trenching, for related requirement.

G. Section 31 23 19 Dewatering.

H. Section 31 23 23 Fill: Fill materials, filling, and compacting.

1.3 PROJECT CONDITIONS

A. Verify that survey bench mark and intended elevations for the Work are as indicated.

PART 2 PRODUCTS - NOT USED

PART 3 EXECUTION

3.1 EXAMINATION

A. Verify that survey bench mark and intended elevations for the work are as indicated.

3.2 PREPARATION

A. Identify required lines, levels, contours, and datum locations.

B. See Section 31 22 00 for additional requirements.

3.3 CONSTRUCTION METHODS

A. Roadway Excavation: Excavation shall be made in conformity with the requirements of the plans and as ordered by the Engineer. The Trade Contractor shall, when necessary in excavation areas, provide and maintain ditches which are adequate to prevent free water from becoming incorporated in material to be used to form embankments, such ditching to be at the sole expense of the Trade Contractor. Where buildings have been removed to clear the way for construction or where old foundations, piles, concrete or masonry walls exist, they shall be removed to 1 foot below subbase or structure foundation material or as directed, 2 feet below

finished grading or as directed; and all cellar and other holes shall be filled with suitable material.

1. Sod and other organic matter shall be disposed of as directed by the Engineer. In the event the Engineer does not direct the disposal of unsuitable material in conformance with Subarticle 3.3.A, the Trade Contractor has the option of disposing of the unsuitable material as specified within Subarticle 3.3.A.

2. Frozen material, otherwise suitable for formation of embankments, shall be placed on embankment slopes or disposed of as directed by the Engineer. The Engineer may direct the removal of any portion of an accepted layer which has become frozen after placement and compaction. This frozen material shall be placed on embankment slopes or disposed of as directed by the Engineer. The removal and placement of frozen material shall be at the sole expense of the Trade Contractor.

3. Topsoil shall be excavated within pavement and shoulder limits at grade points and to an elevation 3 feet below finish grade and elsewhere as directed. The material excavated may be used in the construction of embankments, if permitted by the Engineer, and shall be thus used if the Engineer so directs. In all cases, the use of topsoil in constructing embankments shall be restricted to locations where the surface of the underlying material is dry, its distance above the free water surface at the time of filling is more than 3 feet, and its distance below finish pavement grade is more than 5 feet.

4. Excavation of Rock: When rock is encountered, it shall be excavated to the slope lines and depths indicated on the plans.

   The Trade Contractor shall presplit the rock along the proposed rock slopes to the lines and inclinations shown on the plans except as otherwise provided in the specifications. Presplitting will be required where the backslope is designed at an inclination one (vertical) on one (horizontal) or steeper or where the cut in rock is ten feet or more, measured on the inclination of the proposed slope from the bottom of excavation to the natural surface of sound rock. The maximum vertical height of slope face which can be presplit at any one time shall be 50 feet.

   The presplitting holes shall follow the required rock slope lines and inclinations. Hole drilling shall commence only when solid rock is encountered and exposed to the satisfaction of the Engineer. Unless otherwise permitted by the Engineer, presplitting holes shall have a spacing of 3 feet, center-to-center, and a diameter not greater than 3 inches. The holes shall be extended from the top of solid rock surface to the toe of finished rock slope, unless lesser depths are specified on the plans. The proper angle of drilling shall be maintained at all times so all presplit holes lie essentially in the same plane and are paralleled to each other. No holes shall deviate more than 6 inches at any place in the plane of the specified slope line nor in its vertical alignment. If any cut is presplit by vertical stages (lifts), the presplit holes may be offset, for each stage, a distance not more than 24 inches inside the previously presplit face. Presplit holes shall be lightly loaded with a continuous column charge manufactured especially for presplitting. All space in each hole not occupied by the explosive charge shall be filled with clean stone chips less than 3/8 inch in size or approved equal. Charges near the top of hole shall be reduced sufficiently to eliminate overbreak and heaving. The top charge shall not be less than 3 feet below the top of the drill hole. The methods of detonation shall be such that a uniform plane of rupture of the rock occurs from top to bottom and

between presplit holes. If necessary, the Trade Contractor shall adjust the methods as outlined above so as to result in a uniform plane of rupture in the rock.

Unless otherwise approved by the Engineer, presplit holes shall be drilled at least 50 feet ahead of, and shall be detonated prior to the drilling and blasting, the general pattern holes within the section of any lift of rock to be excavated. The presplitting shall be performed so as to produce a uniform plane of rupture in the rock such that the resulting rock face will not be affected by subsequent blasting and excavation operations.

In the general pattern, blasting following presplitting operations, no portion of any blast hole shall be drilled closer than 4 feet to the presplit face. No portion of any blast hole larger than 3 inches in diameter shall be permitted closer than 12 feet to the presplit face. The spacing of blast holes, distribution and type of explosives, methods of detonation, and the blasting techniques shall be adjusted by the Trade Contractor according to the characteristics and structure of the rock encountered so as not to fracture the rock beyond the presplit face.

Prior to any blasting, the Department will call a blasting conference at which the Trade Contractor shall be represented to determine the methods to be used and the required protection to insure the utmost safety during blasting operations. The Trade Contractor shall be responsible for all damage due either directly or indirectly to such operation.

The Trade Contractor shall schedule his operations so that all rock excavation within a distance of 100 feet of bridge or other large structures, or any portion thereof, is completed to the required slope lines and depths before any structure work is started.

All loose and unstable material, even if located beyond the payment lines, and all breakage and slices shall be removed as directed and as the excavation for each vertical stage (lift) progresses. It shall be, at all times, the responsibility of the Trade Contractor to perform all phases of this work to produce the required rock slope faces to the satisfaction of the Engineer.

Where indicated on the plans or as ordered by the Engineer, rock shall be excavated without the use of explosives. Excavation methods by the use of drilling, splitting, wedging or other approved methods not involving the use of explosives shall be utilized. The method selected by the Trade Contractor shall allow excavation to the slope line(s) and depth(s) as shown on the plans and shall not affect in any way the material or structures outside the excavation line or grade.

5. Placement of Embankment Material: All excavated material and reclaimed waste obtained within the limits of the project shall be used in the formation of embankments, except as provided elsewhere herein or as ordered by the Engineer.

Overhaul will not be allowed; but excavated material shall be transported where directed, provided the designated point of deposit is not more than 100 yards beyond the limits of the work contracted for, unless stated otherwise in the specifications or plans.

When embankments are to be constructed on slopes steeper than 1 vertical to 3 horizontal, the slope of the existing ground on which the embankment is to be placed shall be plowed deeply or cut into steps before the filling is begun.

Embankments shall be constructed of earth, rock, reclaimed waste or a mixture thereof containing no more than 2% by weight of asphalt cement. The embankment shall be constructed by depositing successive layers of fill for the full width of the embankment, unless a partial width is permitted by the contract documents or by the Engineer. If glass and/or clinker are included in reclaimed waste, their individual particles shall be no larger than 1 inch in size. Glass and/or clinker shall be thoroughly mixed with other embankment materials such that their content anywhere in the embankment shall not exceed 25% by weight, with the exception that material placed within 5 feet from the face of the slope shall be free of glass and clinker. No embankment layer shall be deposited on surfaces of snow or ice, nor shall it be placed on frozen or unstable surfaces except under the conditions permitted elsewhere herein. If the Trade Contractor is permitted to continue work, he shall remove, at no cost to the State, any frozen embankment material unless otherwise directed by the Engineer.

The depth of each layer, before compaction, shall not exceed 12 inches except as permitted hereinafter by these specifications, or with the permission of the Engineer.

The embankment shall be crowned or pitched to provide drainage at the close of each day's operations. Where filling in 12-inch layers is impracticable, as in the case of filling in water or over slopes too steep for the operation of equipment, the embankment may be constructed in one layer to the minimum elevation at which equipment can be operated, as determined by the Engineer; and above this elevation, the embankment shall be constructed as specified herein.

In fills where the top of the proposed pavement will be above an existing flexible pavement, the existing pavement is to be removed, the Trade Contractor has the option to reclaim and compact the existing flexible pavement..

When present pavement not in cut or fill is removed, as called for on the plans or directed, the area shall be backfilled with a suitable earth material which shall be free from admixture of subsoil, refuse, stumps, roots, rocks, brush, weeds and other material which will prevent the formation of a suitable seed bed.

Wherever portions of existing concrete pavement are to be removed, such removals shall be made to neat lines. The areas in which such concrete surfaces are to be removed will be delineated by the Engineer before such work is done. Where no break or joint exists in the concrete pavement at the line of delineation, a kerf, at least 2 inches, but no more than 3 inches deep, shall be made in the concrete with an approved concrete cutting saw. The concrete shall then be removed from within the delineated area exercising extreme care to avoid "breakbacks" beyond the kerf, break or joint. Concrete pavement remaining in place shall have vertical edges, and that portion below the kerf shall be reasonably smooth.

Wherever portions of existing bituminous concrete pavement are to be removed, they shall be removed to neat lines as shown on the plans or as directed by the Engineer. Where the delineated limits of the areas in which such bituminous surfaces are to be removed are adjacent to existing bituminous concrete pavement that is to remain in place, the line of delineation shall be cut by a method approved by the Engineer.

When the embankment material consists predominantly of rock fragments and/or fragments of reclaimed waste of such size that material cannot be placed in horizontal

layers of the thickness specified above without crushing or further breaking down the pieces resulting from the excavation methods, such material may be placed in the embankments in horizontal layers not exceeding 3 feet in thickness. Large stones or fragments of reclaimed waste shall not be placed in nests but shall be distributed over the area; and the interstices shall be filled with spalls, finer fragments or earth to form a solid, compact mass.

The entire area of each layer shall be leveled off by suitable grading equipment and shall be compacted as hereinafter specified.

In portions of embankments where piles are to be driven, the Trade Contractor shall not place any material which might interfere with pile driving operations. The correction of any condition which interferes with the pile driving operations in embankments shall be the Trade Contractors responsibility to be constructed under the contract.

No rock fill or reclaimed waste containing fragments over 12 inches in their greatest dimension shall be placed above an elevation which is 2 feet below the top of the embankment.

No particle over 5 inches in its greatest dimension shall be placed within 12 inches of the elevation of the top of the prepared subbase unless otherwise specifically authorized.

Prior to the formation of any embankment, the Trade Contractor may submit a plan in a form acceptable to the Engineer for grading operations detailing the location of embankment material sources and points of deposit for the entire project in order to qualify for payment for overhaul as hereinafter provided. Failure to submit such a plan will be construed as the Trade Contractors waiver of any and all rights to additional requirements imposed by the Department or Engineer in relation corrective actions in regard to embankment formation.

6. Compaction: The entire area of each layer of the embankment and the subgrade in the excavated areas shall be uniformly compacted to at least the required minimum density by use of compaction equipment consisting of rollers, compactors or a combination thereof. Earth-moving and other equipment not specifically manufactured for compaction purposes will not be considered as compaction equipment.

   The dry density after compaction shall not be less than 95% of the dry density for that soil when tested in accordance with AASHTO T 180, Method D. Each layer of the embankment and the subgrade shall be compacted at optimum moisture content. No subsequent layer shall be placed until the specified compaction is obtained for the previous layer.

7. Stability: If after full compliance with the requirements of these specifications with regard to excavation, placement and compaction density requirements, a stable embankment or subgrade has not been obtained, the Trade Contractor shall proceed to perform such corrective work as is necessary to produce a stable embankment or subgrade. This work may include, but not necessarily be limited to control of moisture to within limits suitable for obtaining the required stability; blending with rock or granular material from any project excavation or borrow, or free draining material or any combination thereof; removal and replacement with acceptably compacted material or a combination of these methods approved by the Engineer. Any of the foregoing methods

may be supplemented by suspending embankment operations and allowing the material to dry.

Trade Contractor is responsible for corrective actions if embankments are constructed of material from Project excavation which the Engineer determines is not properly compacted or is not sufficiently stabilized, The Trade Contractor is additionally responsible for the corrective work on embankments constructed on Project embankments as determined by the Engineer that is necessary, and requires departure from the plan for grading operations to obtain material at locations other than shown on the aforementioned plan.

When embankments are constructed of borrow, they shall be stable. In this case however, the methods and material used to obtain such stability shall be determined by the Trade Contractor.

8. Surplus Excavated Material: All surplus excavated material shall be used where directed by the Engineer, to uniformly widen embankments, to flatten slopes, to fill low places in the right of way, or for such other purposes as the Engineer may direct, provided the area designated for deposit does not conflict with activities related to Section 31 23 16.13 Trenching.

   Any surplus or unsuitable material not required, nor permitted to be used for such purposes, shall be disposed of in accordance with Subarticle3.3.A-10.

9. Fences: The Trade Contractor shall erect either the permanent or temporary fence, to the satisfaction of the Engineer, at all points where the land is used for pasturing and where the existing fences are affected by the grading operations. Permanent or temporary fences shall be erected prior to the removal or destruction of any part of the existing fence, and any temporary fence erected shall be removed when no longer required.

   The Trade Contractor is responsible for any temporary fencing required to ensure the construction site is secure, additionally that the New Haven Rail Yard Security perimeter is properly secured at the project site location.

10. Disposal of Unsuitable Material: When the Engineer has not directed otherwise, the Trade Contractor has the option to dispose of unsuitable excavated material by one or both of the following methods:

    a. By removing such material from within the limits of the Project and disposing of such material at point or points as the Trade Contractor shall determine provided this does not create any detrimental effects to the project and the Engineer does not object to the area selected for disposal.

    b. By disposing of such material within the limits of the Project in accordance with the details and requirements shown on the plans and the following requirements:

       Not less than 15 days prior to disposing of any such material within project limits, the Trade Contractor shall submit to the Engineer for his approval a proposal delineating the locations and extent of the areas in which he intends to dispose of such material. The proposal shall describe the nature of the material and the methods to be employed in placing and covering the material. The proposal will be reviewed for its effects on the completed construction and the environment. The proposal shall be

amended as required by the Engineer. No such material shall be disposed of within project limits until the proposal has been approved by the Engineer.

All work shall be done in accordance with the approved proposal.

Suitable material excavated for the disposal of the unsuitable excavated material shall be placed in the embankment in accordance with the requirements of Section 31 23 16.13 Trenching or shall be used to cover the unsuitable excavated material.

The Owner does not guarantee nor imply that the areas available for disposal of unsuitable excavated material within project limits will be adequate for the disposal of all unsuitable excavated material to be removed. The Trade Contractor shall dispose of all unsuitable excavated material in excess of that which can be placed within the permitted areas.

11. Slopes: Earth slopes with a degree of slope from 2:1 to 5:1 shall be tracked unless the Engineer directs that they shall not be tracked. Tracking shall consist of traversing the slopes with cleated tracks so that the cleat indentations are horizontal. Where topsoil is to be placed on slopes, the tracking shall be done prior to the installation of the topsoil.

    Tracking is not to be construed to be used for slope compaction. Its sole purpose is to provide indentations in the slope to help reduce soil erosion. Other methods of achieving the desired results may be used, with the permission of the Engineer.

B. Structure Excavation:

1. Dimensions and Elevations of Footings: The elevations of the bottom of footings, as shown on the plans, shall be considered as approximate only; and the Engineer may order, in writing, such changes in dimensions or elevations of footings as may be necessary to secure a satisfactory foundation.

2. Preparation of Foundations: All rock or other suitable foundation material shall be cleared of all overlying material, cleaned and cut to a firm surface, either level, stepped or serrated, as directed by the Engineer. All seams shall be cleaned out and filled with concrete, mortar or grout. Any over-breakage in rock more than 6 inches below the plan grade for the bottom of the footing not authorized by the Engineer shall be replaced by the Trade Contractor with Class "A" as specified in Section 03 30 00 Cast-in-Place Concrete at the Trade Contractor's expense.

   When the structure is to rest on a material other than rock, special care shall be taken not to disturb the material below the bottom of the excavation; and the final removal of the foundation material to grade shall not be made until just before the forms for concrete or masonry are placed. Any foundation material disturbed below plan grade or revised plan grade shall be dressed and compacted at the Trade Contractor's expense. This shall not apply, however, when a granular fill foundation course is required.

3. Cofferdams: If a cofferdam is required under this item as ordered by the CTDOT PM, it will be designed and constructed in accordance with the provisions herein

   a. Cofferdams shall be carried to adequate depths and heights, shall comply with Section 31 41 00, and shall be safe and watertight as necessary for the proper performance of the work which must be done inside them. Cofferdams shall be

constructed so that the work can be safely carried to an elevation 2 feet lower than the elevation shown on the plans for the bottom of the structure footing, or, if a granular fill foundation is shown on the plans, to an elevation 2 feet lower than the bottom of the granular fill foundation. The interior dimensions of the cofferdams shall be sufficient for the unobstructed and satisfactory completion of all necessary substructure work, such as pile driving, form building, inspection and pumping. Cofferdams which become tilted or displaced prior to the completion of all work to be done within them, shall be righted, reset, or enlarged as may be necessary to provide the clearance for the unobstructed performance of all necessary work, and such corrections and adjustments of cofferdams shall be at the sole expense of the Trade Contractor. Cofferdams shall be completely dewatered as required to complete the work entirely in the dry, except as specified below.

When conditions are encountered that render it impractical to dewater the cofferdam, the Engineer may require the placing of underwater concrete of such dimensions as will be necessary to allow the Trade Contractor to complete the substructure in the dry. The placement of underwater concrete shall comply with Section 03 33 00.

b. Cofferdams must be constructed to protect uncured masonry and concrete against damage from a sudden rising of the water and prevent damage to structure foundations by erosion. No part of the cofferdam which extends into the substructure may be left in place without written permission from the Engineer.

c. At least 30 calendar days prior to the start of constructing or installing a cofferdam, the Trade Contractor shall submit to the Engineer, for his information, detailed plans and computations of its proposal prepared by a professional Engineer licensed in the State. The furnishing of such plans and methods shall not serve to relieve the Trade Contractor of its responsibility for the safety of the work and the successful completion of the Project. The Trade Contractor's proposal must meet all requirements established in regulatory permits for the Project and must also conform to the requirements of Section 31 23 19 Dewatering

d. Removal of Cofferdams: Unless the Engineer directs otherwise, the Trade Contractor shall remove all parts of the cofferdam after completion of the required work. This shall be done in such a way as not to disturb or otherwise damage any permanent construction.

4. Dewatering: If a cofferdam is required under this item, dewatering will be performed in accordance with the provisions of Section Dewatering and additional provisions provided herein.

a. Pumping from the interior of any cofferdam shall be done in such a manner as to preclude the possibility of water moving through uncured masonry or concrete. During the placement of concrete or masonry, and for at least 24 hours thereafter, any pumping shall be done from a suitable sump located outside the horizontal limits and below the elevation of the work being placed or as directed by the Engineer.

b. The pumped water must be discharged in accordance with the requirements of Section 31 23 19 Dewatering

5. Inspection: After each excavation is completed, the Trade Contractor shall notify the Engineer; and no construction shall be started until the Engineer has approved the depth of the excavation and the character of the foundation material.

6. Fill

   a. Adjacent to Structures: All spaces excavated and not occupied by permanent work or pervious structure backfill shall be filled to the surface of the surrounding ground with suitable material. Such backfill shall be thoroughly compacted and neatly graded.

   b. Fill placed around arches, rigid frames, box culverts and piers shall be deposited on both sides of the structure to approximately the same elevation at the same time.

   c. Fill Compaction: Each layer of backfill shall be spread to a thickness not exceeding 6 inches in depth after compaction and shall be thoroughly compacted by the use of power rollers or other motorized vehicular equipment, by tamping with mechanical rammers or vibrators, or by pneumatic tampers. Any equipment not principally manufactured for compaction purposes or which is not in proper working order in all respects shall not be used within the area described above.

   d. Special attention shall be given to compaction in places close to walls where motorized vehicular compaction equipment cannot reach. Within 3 feet of the back face of walls and within a greater distance at angle points of walls, each layer of backfill shall be compacted by mechanical rammers, vibrators or pneumatic tampers.

   e. The dry density of each layer of backfill after compaction shall not be less than 95% of the dry density for that material when tested in accordance with AASHTO T180, Method D. In conducting this test, material retained on the 3/4-inch sieve size shall be replaced with material retained on the No. 4 sieve, as noted as an option in the specifications for this test. Adequate provision shall be made for the drainage of all fill in accordance with the provisions of the plans, or as ordered by the Engineer.

   f. Each layer of backfill shall be compacted at optimum moisture content. No subsequent layer shall be placed until the specified compaction is obtained for the previous layer.

   g. No fill shall be placed against any structure until the Engineer has given permission to do so, and in no case until after the permitted time for removal of forms.

END OF SECTION 31 23 16

SECTION 31 23 16.13 - TRENCHING

PART 1 GENERAL

1.1 SECTION INCLUDES

A. Removal and satisfactory disposal of all materials, the removal of which is necessary for the proper completion of the work, to the dimensions shown on the plans or as ordered, and backfilling, all in accordance with these specifications for the following:

1. The construction of pipe culverts, endwalls, catch basins, drop inlets, manholes, underdrains and outlets, sewers, service pipes.

2. The removal of stormwater drainage structures, stormwater pipes and appurtenances beyond the limits of the roadway and structure excavation.

3. The removal of miscellaneous items such as abandoned underground tanks, pipelines, etc.

4. The construction of concrete duct banks.

B. The New Haven Rail Yard is considered an area of environmental concern. For additional information refer to Section 00 73 93 – Environmental Health and Safety Requirements.

C. On a daily basis, the Trade Contractor will be allowed to backfill each utility trench with excavated material from the trench or as directed by the Engineer. This material must only be placed above the seasonal high groundwater elevation (5.0').

D. The Trade Contractor shall be aware that there are designated archaeological sites within the New Haven Rail Yard and the 152 Water Street work area. Excavations shall follow the following requirements where working within the New Haven Rail Yard and the 152 Water Street work area.

1. The Trade Contractor shall be alert to the possibility that, during the prosecution of the Project, significant archaeological or paleontological remains or other such materials may be uncovered. When archaeological or paleontological remains or other such materials are uncovered, the Trade Contractor shall immediately halt operations in the location of same and shall notify the Engineer of said discovery. The Trade Contractor shall make every effort to preserve archaeological or paleontological nature and importance of such materials in relation to one another and to the enclosing soil.

2. The Engineer shall have the authority to suspend Project work in the area of such discovery for the purpose of preserving, documenting, and recovering the archaeological or paleontological materials. The Trade Contractor shall carry out all instruction of the Engineer for the protection of such materials, including steps to protect the site from vandalism and unauthorized investigations, from accidental damage and from dangers such as heavy rainfall or runoff. The Trade Contractor shall reschedule its work to

minimize any loss of time needed to complete the Project while the State of Connecticut evaluates, records, and salvages the archaeological or paleontological materials.

3. Extra work, ordered by the Engineer in this connection will be completed and delays caused by archaeological or paleontological preservation and protection, which the Trade Contractor demonstrates have delayed completion of the Project, will be treated under Section 01 26 00 Contract Modification Procedures.

1.2 RELATED REQUIREMENTS

A. Document Maintenance of Way & Employee Parking Structure Soil and Rock Report: Geotechnical report; bore hole locations and findings of subsurface materials.

B. Section 00 73 93 – Environmental Health and Safety Requirements.

C. Section 31 23 16 – Excavation.

D. Section 31 23 23 – Fill.

E. Section 31 23 19 – Dewatering.

PART 2 PRODUCTS

2.1 FILL MATERIALS

A. See section 31 23 23 for fill requirements.

PART 3 EXECUTION

3.1 EXAMINATION

A. Verify that survey bench marks and intended elevations for the work are as indicated.

3.2 PREPARATION

A. Identify required lines, levels, contours, and datum locations.

3.3 CONSTRUCTION METHODS

A. Trench excavation shall be made in conformity with the requirements of the plans or as ordered. The Trade Contractor shall furnish and employ such shores, braces, pumps, etc., as may be necessary for the protection of property, proper completion of the work and the safety of the public and employees of the Trade Contractor and the Department. All bracing, etc., shall be removed when no longer required for the construction or safety of the work.

B. When a drainage structure is to be eliminated, it shall be completely removed and all pipes plugged with cement masonry or removed completely.

C. Where the plans or contract documents show that a drainage structure is to be abandoned, the structure shall be removed to a depth 2 feet below the subgrade or to the depth shown on the plan. The floor of the structure shall be broken and all pipes shall be plugged with cement masonry.

D. Wherever portions of existing concrete pavement that would otherwise remain in place must be removed in conjunction with trench excavation, such removals shall be made to neat lines. The areas in which such concrete pavements are to be removed will be delineated by the Engineer before such work is done. Where no break or joint exist in the concrete pavement at the line of delineation, a full depth cut shall be made in the concrete with a concrete cutting saw approved by the Engineer. The concrete shall then be removed from within the delineated area, exercising extreme care to avoid “breakbacks” beyond the sawcut or joint. Concrete pavement remaining in place shall have vertical edges.

E. Wherever the concrete pavement to be removed has been overlaid with bituminous concrete and the adjacent bituminous concrete pavement is to remain in place, the bituminous pavement shall be removed to a neat line that is 1 foot beyond the neat line for the concrete pavement removal.

F. Wherever portions of existing full-depth bituminous concrete pavement are to be removed in conjunction with trench excavation, they shall be removed to neat lines. Where the limits of the areas in which such bituminous pavement is to be removed are adjacent to existing bituminous concrete pavement that is to remain in place, the limits shall be cut by a method approved by the Engineer.

G. After the excavation is completed, the Trade Contractor shall notify the Engineer; and no masonry, pipe or other material shall be placed in the excavated area until the Engineer has approved the depth of excavation and the character of the foundation material.

H. When backfilling is required, the material used shall be of a quality satisfactory to the Engineer and shall be free from large or frozen lumps, wood and other extraneous material. All backfill shall be placed in layers of not more than 6 inches in depth after compaction and shall be thoroughly compacted by means of mechanical rammers or vibrators or by pneumatic tampers. Hand tampers shall be used only upon written permission of the Engineer. Unless otherwise ordered by the Engineer, the backfill shall be brought to the surface of the surrounding ground and neatly graded.

I. All suitable material removed in making the excavation shall be used for backfill if required. All surplus or unsuitable material shall be removed and disposed of as directed. Should additional material be required for backfilling, it may be obtained from the Project excavation or from borrow pits, gravel pits, or elsewhere as the Engineer may direct.

J. Each layer of backfill shall be compacted to optimum moisture content. No subsequent layer shall be placed until the specified compaction is obtained for the previous layer.

K. Fill placed around pipes shall be deposited on both sides to approximately the same elevation at the same time. Rock fill or stones larger than 2 inches shall not be placed closer than 2 feet from the pipes on the sides as well as the top.

L. No backfill shall be placed against any structure until permission shall have been given by the Engineer.

M. Test pits shall be dug at the locations shown on the plans or as ordered by Engineer. If called for, the existing surface shall be restored under the appropriate item.

N. Refer to Section 31 23 16 – Excavation, for requirements pertaining to the removal of existing piles and foundations.

END OF SECTION 31 23 16.13

SECTION 31 23 19 – DEWATERING

PART 1 GENERAL

1.1 SECTION INCLUDES

A. Construction of flow diversions, barriers or other such protective facilities and methods as are necessary to prevent intrusion of water (surface and subsurface) into excavated areas located within the limits of the project. Such work shall be understood to mean any temporary type of protective facility which the Trade Contractor elects to build or use to ensure that the temporary and permanent structures or utilities will be in the dry. Also included is any dewatering needed at any demolition or removal operation. The handling of flood flows and the protection of existing structures, and any or all of the finished construction during high water, are included in the scope of work under this item. This item also includes all piping and work necessary to connect to the railyard dewatering treatment plant.

Special Note: During the Maintenance of Way (MOW) Building Project, an existing on-site groundwater treatment system will be in operation in the railyard for the MOW, Yard Power Upgrade (YPU), and Pedestrian Bridge Overpass (PBO) projects to use. The railyard groundwater treatment system is expected to have sufficient capacity to concurrently treat up to 500 gallons per minute of dewatering fluid from the projects. The MOW project will discharge dewatering waters to the railyard treatment system and will coordinate with the flow rates of the PBO and YPU projects. The design, permitting, construction, operation and maintenance of the treatment system will remain the responsibility of the Department or their designee. The Trade Contractor will be responsible for conveyance of dewatering waters from the MOW project to the railyard treatment plant.

The contamination is documented in the reports listed in the Section 01 11 00 Summary of Work.

This item does not apply to the possible diversion of existing storm water flow around the construction site during Project activities. Diversion of existing storm water or surface flows shall be completed in accordance with the Contract and all applicable permits.

1.2 SUBMITTALS

A. See Section 01 33 00 – Submittal Procedures and Section 01 33 00.13 – Document Control.

1.3 RELATED REQUIREMENTS

A. Section 31 23 16 Excavation.

B. Section 31 23 16.13 Trenching.

PART 2 PRODUCTS

2.1 MATERIALS

A. The Trade Contractor may use wellpoints, high speed pumps, trash pumps, and other equipment customarily used for utility excavations. etc.

Any and all materials utilized in conjunction with this section shall be non-reactive with the chemical constituents present in the groundwater at the project site.

PART 3 EXECUTION

3.1 EXAMINATION

A. Verify that the area for connecting to the rail yard dewatering collection piping is clear from obstructions and ready for the Work as indicated.

3.2 PREPARATION

A. Lay out the location of additional groundwater collection piping prior to construction.

3.3 CONSTRUCTION

A. The Trade Contractor shall maintain a groundwater level of at least six inches below the bottom of the excavation until the pipes or structures have been installed. At demolition and removal operations the groundwater shall be maintained at the bottom of the excavation. Allowing water to seep into the bottom of the excavation will not be permitted. Dewatering effluent shall be discharged to the NHRY groundwater treatment system.

B. The Trade Contractor shall coordinate the placement of all equipment for dewatering with State Project Nos. 301-0106, (Component Change Out Shop), 301-0121 (Central Distribution Warehouse), 301-0123 (Pedestrian Bridge Overpass), & 301-144 (Yard Power Upgrade) which are being constructed concurrently.

C. The Trade Contractor shall be aware that the project area is in a tidal area and the groundwater elevations may fluctuate due to the tidal influences as well as storm events.

D. Dewatering shall be performed by pumps, pumping wells, wellpoints and/or well point systems including all miscellaneous work required. The method used shall be the Trade Contractor's responsibility. The Trade Contractor shall submit details of the proposed dewatering system to the Engineer for approval. The submittal shall include: the flow rate for the system, wellpoint location and/or pump locations, installation procedures, depth of wellpoints and pumping wells and other data as required to completely detail the dewatering system, and shall be stamped by a Connecticut Licensed P.E. The Trade Contractor shall provide, operate and maintain at all times the proper machinery of sufficient capacity to meet the requirements for removal of subsurface and surface water which may be encountered in the excavation, and shall keep on hand additional pumps of sufficient capacity to provide reasonable backup for any breakdown.

E. The dewatering method shall preserve the strength of the foundation soils, prevent loss of fines from foundation and adjacent soils, cause no damage to existing or proposed structures, stabilize foundation and adjacent soils and trench bottoms, and control groundwater to permit proper excavation of the work.

F. Wellpoints shall be located close to the excavation area and shall surround the excavation. Direct pumping from trenches is not acceptable. The method used shall minimize suspended sediment in the effluent.

G. In the event of failure or shutdown of the dewatering pumps, the Trade Contractor shall take all necessary measures to prevent any newly installed concrete, structures or pipes from damage or becoming buoyant. Unless otherwise provided or directed, all such temporary protective work shall be removed and disposed of in an approved manner in accordance with local, state and federal regulations when no longer required.

H. The Trade Contractor shall be responsible for scheduling of work under this item so as not to interfere with any sequence of operations developed for this project. Delays as a result of work required under this item shall not constitute a claim for extension of contract time or an increase in monetary compensation.

I. All discharge permit requirements will be addressed under the existing discharge permit established for the railyard dewatering water treatment system. However, at a minimum, the MOW Trade Contractor will be required to coordinate discharge rates with the railyard treatment system operator to ensure the maximum permitted flow rates are not exceeded. In addition, the MOW Trade Contractor will be required to work cooperatively with the Department to address any permit exceedance events.

J. As part of the connection to the railyard treatment system, the Trade Contractor shall install and maintain:

1. All below grade and above grade piping to connect to the railyard dewatering water collection system.

2. A meter to monitor the influent in order to measure the quantity of water being delivered to the system. The meter shall be capable of measuring instantaneous flow, and measuring and recording cumulative flow. The meter shall be used continuously and shall be calibrated at the beginning of the dewatering activities and then periodically, as directed by the Engineer. The meter assembly shall include a sampling point, shut off valve, and check valve to isolate the MOW dewatering fluid connection from the New Haven Rail Yard manifold.

3. Pavement Patches: where piping crosses roadways, pavement shall be patched with a pavement cross section that matches existing with neat saw cut or as ordered by the Engineer.

K. System Operation: The Engineer will notify the MOW Trade Contractor any time that the railyard dewatering water treatment system discharge exceeds the pollutant levels established in the permit. In the event of an exceedance, the MOW Trade Contractor shall:

1. Cease the discharge to the treatment system immediately;

2. Assist in the determination as to the source of the exceedance(s); and

3. Work cooperatively to address any permit exceedances.

The Trade Contractor shall operate the dewatering equipment at a rate that removes the groundwater that naturally infiltrates the excavation. The Trade Contractor shall not cause a hydraulic gradient that draws groundwater into the excavation at an excessive rate. Further, the Trade Contractor will be required to coordinate discharge rates to ensure the maximum established project flow rates are not exceeded.

L. Equipment Decontamination: All equipment shall be provided to the work site free of gross contamination. The Engineer may prohibit from the site any equipment that in his opinion has not been thoroughly decontaminated prior to arrival. Any decontamination of the Trade Contractor's equipment prior to arrival at the site shall be at the expense of the Trade Contractor. The Trade Contractor is prohibited from decontaminating equipment on the Project site that has not been thoroughly decontaminated prior to arrival.

The Trade Contractor shall furnish labor, materials, tools and equipment for decontamination of all equipment and supplies that are used to handle contaminated groundwater. Decontamination of equipment used on site shall be conducted at an area designated by the Engineer and shall be required prior to equipment and supplies leaving the Project.

The Trade Contractor shall be responsible for the collection and disposal of any liquid wastes that may be generated by its decontamination activities in accordance with all applicable laws and regulations.

END OF SECTION 31 23 19

SECTION 31 23 23 - FILL

PART 1 GENERAL

1.1 SECTION INCLUDES

A. Fill is required for:

1. Filling, backfilling, and compacting for the building foundation and other structures.

2. Backfilling and compacting for utilities outside the building to utility main connections.

3. Filling holes, pits, and excavations generated as a result of removal (demolition) operations.

B. Four types of fill are covered in this specification:

1. Granular Fill

2. Compacted Granular Fill

3. No 6 Crushed Stone

4. Reuse of Stockpiled Material

1.2 DESCRIPTIONS

A. Granular Fill: This material shall be used as a foundation for structures, to replace unstable material in slopes, as a foundation for sidewalks and culverts, in shoulders and elsewhere as indicated on the plans, required by the specifications or ordered by the Engineer. It shall consist of gravel or reclaimed miscellaneous aggregate containing no more than 2% by weight (mass) of asphalt cement conforming to the requirements of these specifications.

B. Compacted Granular Fill: This material shall consist of furnishing and placing compacted granular fill as foundation for structures where shown on the plans or directed by the Engineer.

C. No. 6 Crushed Stone: This material shall consist of crushed stone placed to a uniform depth to the limits and for the depth shown on the plans, or as directed by the Engineer.

D. Reuse of Stockpiled Material: As indicated in Section 01 11 00 Notice to Contractor Reuse of Stockpiled Material, the material provided by the Department is to be used in place of Granular Fill.

1.3 RELATED REQUIREMENTS

A. Maintenance of Way Building & Employee Parking Structure Soil and Rock Report: Geotechnical report; bore hole locations and findings of subsurface materials.

B. Section 01 57 13 - Temporary Erosion and Sedimentation Control: Slope protection and erosion control.

C. Section 31 22 00 - Grading: Removal and handling of soil to be re-used.

D. Section 31 23 16.13 - Trenching: Excavating for utility trenches outside the building to utility main connections.

E. Section 01 11 00 – Notice to Contractor Reuse of Stockpiled Material.

1.4 SUBMITTALS

A. See Section 01 33 00 – Submittal Procedures and Section 01 33 00.13 – Document Control.

B. Fill Composition Test Reports: Results of laboratory tests on proposed and actual materials used.

C. Compaction Density Test Reports.

PART 2 PRODUCTS

2.1 FILL MATERIALS

A. Granular Fill: Granular fill shall consist of broken or crushed stone, gravel, reclaimed miscellaneous aggregate or a mixture thereof and shall conform to the following requirements:

1. Broken or crushed stone shall be the product resulting from the artificial crushing of rocks, boulders or large cobblestones, substantially all faces of which have resulted from the crushing operation. Broken or crushed stone shall consist of sound, tough, durable stone, reasonably free from soft, thin, elongated, laminated, friable, micaceous or disintegrated pieces, mud, dirt or other deleterious material.

2. Bank or crushed gravel shall consist of sound, tough, durable particles of crushed or uncrushed gravel, free from soft, thin, elongated or laminated pieces and vegetable or other deleterious substances. Crushed gravel shall be the manufactured product resulting from the deliberate mechanical crushing of gravel with at least 50% of the gravel retained on the No. 4 sieve having at least one fractured face.

3. Reclaimed Miscellaneous Aggregate material shall consist of sound, tough, durable particles of crushed reclaimed waste. It shall be free of soft disintegrated pieces, mud, dirt, glass or other injurious materials and contain no more than 2% by weight of asphalt cement.

   It shall be tested for soundness when tested with magnesium sulfate solution for soundness using AASHTO Method T104 coarse aggregate shall not have a loss of more than 15% at the end of five(5) cycles, when directed by the Engineer or Owner.

4. Granular Fill: Which shall be composed of broken or crushed stone, bank or crushed gravel or reclaimed miscellaneous aggregate or a combination there-in conforming shall conform to the following gradation:

Granular Fill Gradation

Square Mesh Sieves	Percent Passing by Weight (mass)
Pass 3 1/2 inch	100
Pass 1 1/2 inch	55-100
Pass 1/4 inch	25-60
Pass #10	15-45
Pass #40	5-25
Pass #100	0-10
Pass #200	0-5

The grading percentages specified in the above table shall apply to the material after it has been delivered to the construction site as well as when tested at the pit or other source of supply. When the fraction of the dry sample passing the No. 100 (150-µm) mesh sieve is greater than 8% by weight (mass), the sample will be washed as indicated. The amount obtained from washing shall be added to that obtained by dry sieving; and the total amount passing each sieve shall meet the above gradation.

5. Bank or crushed gravel and Reclaimed Miscellaneous Aggregate shall meet the following plasticity and resistance to abrasion requirements:

   a. Plasticity:

      1. When the fraction of the dry sample passing the No. 100 (150-µm) mesh sieve is 4% or less by weight (mass), no plastic limit test will be made.

      2. When the fraction of the dry sample passing the No. 100 (150-µm) mesh sieve is greater than 4% and not greater than 8% by weight (mass), that fraction shall not have sufficient plasticity to permit the performing of the plastic limit test using AASHTO Method T 90.

      3. When the fraction of the dry sample passing the No. 100 (150-µm) mesh sieve is greater than 8% by weight (mass), the sample will be washed; and the additional material passing the No. 100 (150-µm) mesh sieve shall be determined by AASHTO Method T 146, except that the No. 100 (150-µm) mesh sieve will be substituted for the No. 40 (425-µm) mesh sieve where the latter is specified in AASHTO Method T 146.

         The combined materials that passed the No. 100 (150-µm) mesh sieve shall not have sufficient plasticity to permit the performing of the plastic limit test using AASHTO Method T 90.

   b. Test for Resistance to Abrasion. Gravel materials shall show a loss on abrasion of not more than 50% using AASHTO Method T 96.

B. Compacted Granular Fill: Shall consist of bank or crushed gravel or reclaimed miscellaneous aggregate and conform to the requirements below and admixtures as well as surface protective materials used to prevent the gravel from freezing must meet the approval of the Engineer.

1. Bank or crushed Gravel: shall consist of sound, tough, durable particles of crushed or uncrushed gravel, free from soft, thin, elongated, or laminated pieces and organic or other deleterious substances. It shall be hard and durable enough to resist weathering, traffic abrasion, and crushing. It shall be subject to testing for soundness in accordance with the requirements for granular fill, by this specification, when directed by Engineer or Owner. It shall meet the gradation as shown below.

2. Reclaimed Miscellaneous Aggregate: shall consist of sound, tough, durable particles of crushed reclaimed waste. It shall be free from soft, disintegrated pieces, mud, dirt, glass or other injurious material, and contain no more than 2% by weight (mass) of asphalt cement. This reclaimed miscellaneous material shall meet the gradation below and the requirements for plasticity and resistance to abrasion, set forth under granular fill and shall be tested for soundness in accordance with the requirements of granular fill, both by this specification, when direct by Engineer or Owner.

3. Bank or Crushed Gravel and Reclaimed Miscellaneous Aggregate shall conform to the following gradation.

Compacted Granular Fill Gradation:

Square Mesh Sieves	Percent Passing by Weight (mass)
Pass 5 inch	100
Pass 3 ½ inch	90-100
Pass 1 ½ inch	55-95
Pass ¼ inch	25-60
Pass #10	15-45
Pass #40	5-25
Pass #100	0-10
Pass #200	0-5

C. No. 6 crushed stone shall be the product resulting from the artificial crushing of rocks, boulders, or large cobblestones, substantially all faces of which have resulted from the crushing operation. Crushed stone shall consist of sound, tough, durable stone, reasonably free from soft, thin, elongated, laminated, friable, micaceous or disintegrated pieces, mud dirt, or other deleterious material. Gradation of No. 6 stone shall meet the following specifications:

Square Mesh Sieves	Percent Passing by Weight (mass)
Pass 1 inch	100
Pass ¾ inch	90-100
Pass ½ inch	20-55
Pass $^{3}/_{8}$ inch	0-15
Pass #4	0-5

Reclaimed miscellaneous aggregate shall only be used where authorized in the specifications.

D. Reuse of Stockpiled Material: Shall consist of fill material provided by the Department.

PART 3 EXECUTION

3.1 EXAMINATION

A. Identify required lines, levels, contours, and datum locations.

3.2 PREPARATION

A. Scarify subgrade surface to a depth of 6 inches to identify soft spots.

B. Cut out soft areas of subgrade not capable of compaction in place. Backfill with general fill.

C. Compact subgrade to density equal to or greater than requirements for subsequent fill material.

D. Until ready to fill, maintain excavations and prevent loose soil from falling into excavation.

3.3 FILLING

A. Fill to contours and elevations indicated using unfrozen materials.

B. Employ a placement method that does not disturb or damage other work.

C. Systematically fill to allow maximum time for natural settlement. Do not fill over porous, wet, frozen or spongy subgrade surfaces.

D. Maintain optimum moisture content of fill materials to attain required compaction density.

E. Slope grade away from building minimum 2 inches in 10 ft, unless noted otherwise. Make gradual grade changes. Blend slope into level areas.

F. Reshape and re-compact fills subjected to vehicular traffic.

3.4 CONSTRUCTION

A. Granular fill: When granular fill is used for foundation for structures or to replace rock or unsuitable material in trenches, it shall be deposited in layers not over 6 inches in depth, with each layer thoroughly compacted before the addition of other layers.

B. Compacted Granular Fill: After all excavation has been completed, gravel or reclaimed miscellaneous aggregate shall be deposited in layers not exceeding 8 inches in depth over the areas. In exceptional cases, the Engineer may permit the first layer to be thicker than 8 inches. Each layer shall be leveled off by the use of blade graders or bulldozers with adequate power for the work involved. The entire area of each layer shall be compacted by use of vibratory, pneumatic-tired or tread-type compaction equipment approved by the Engineer. Compaction shall be continued until the dry density over the entire area of each layer is not less than 95% of the dry density achieved by AASHTO T180, Method D. If a layer is formed from reclaimed miscellaneous aggregate containing bituminous concrete, the wet density after compaction on this layer shall not be less than 95% of the wet density for that compacted granular fill when tested in accordance with AASHTO T180, Method D.

Each layer of compacted granular fill shall be compacted at optimum moisture content. No subsequent layer shall be placed until the specified compaction is obtained for the previous layer.

In this test, material retained on the 3/4-inch sieve shall be replaced with material retained on the No. 4 sieve, as noted as an option in the specifications for this testing.

The embankment adjacent to the compacted granular fill shall be placed simultaneously with the compacted granular fill, and at no time shall there be a difference of more than 2 feet in elevation of the two classes of material. The embankment material to be placed simultaneously with the compacted granular fill shall extend at least 20 feet in every direction beyond the limits of the compacted granular fill, except that where a narrower width is shown on the plans, such narrower width of material shall be placed as prescribed above.

C. No. 6 Crushed Stone: The Trade Contractor shall place crushed stone to the limits and depths, and to the grade, shown on the Plans, or as directed by the Engineer.

The crushed stone shall be thoroughly compacted until the surface is true and unyielding, displaying no deformation or movement under the compaction equipment. Compact crushed stone by vibratory compaction equipment specifically manufactured for compaction purposes.

D. Reuse of Stockpiled Material: When Reuse of Stockpiled material is used, it shall be used in place of granular fill and meet the requirements of section 3.4.A above.

END OF SECTION 31 23 23

SECTION 31 23 23.14 – PERVIOUS STRUCTURE BACKFILL

PART 1 - GENERAL

1.1 DESCRIPTION

A. Pervious structure backfill shall include the furnishing, placing, and compaction of pervious material adjacent to structures.

1.2 SUBMITTALS

A. See Section 01 33 00 – Submittal Procedures and Section 01 33 00.13 – Document Control.

PART 2 - PRODUCTS

2.1 MATERIALS

A. Pervious structure backfill shall consist of broken or crushed stone, broken or crushed gravel, or reclaimed miscellaneous aggregate containing no more than 2% by weight (mass) of asphalt cement or mixtures thereof. Materials for this work shall conform to the following requirements:

1. **Broken or crushed stone** shall consist of sound, tough, durable stone, reasonably free from soft, thin, elongated, friable, laminated, micaceous or disintegrated pieces, mud, dirt or other deleterious material and shall be sized to meet the requirements of Section 31 23 23 sub-article14.2.1.B. The crusher-run stone shall show a loss on abrasion of not more than fifty percent using AASHTO Method T 96.

2. **Bank or crushed gravel** shall consist of sound, tough, durable particles of crushed or uncrushed gravel free from soft, thin, elongated or laminated pieces and vegetable or other deleterious substances. It shall be subject to testing for soundness in accordance with Section 31 23 23 sub-article 14.2.1.B. when directed by the Engineer or Owner. The crusher-run stone shall meet the requirements for grading, plasticity, and resistance to abrasion indicated in Section 31 23 23.14 sub-article 2.1.B.

3. **Reclaimed Miscellaneous Aggregate** shall consist of sound, tough, durable particles of crushed reclaimed waste. It shall be free of soft disintegrated pieces, mud, dirt, glass or other injurious material, and contain no more than 2% by weight (mass) of asphalt cement. It shall meet the requirements for grading, plasticity, resistance to abrasion, and soundness indicated in Section 31 23 23.14 sub-article 2.1.B.

B. Gradation, Plasticity, Resistance to Abrasion and Soundness Requirements:

1. Pervious Structural Backfill Gradation:

Square Mesh Sieves	**Percent passing by weight (mass)**
Pass 5 inch	100
Pass 3 1/2 inch	90-100
Pass 1 1/2 inch	55-95
Pass 1/4 inch	25-60
Pass #10	15-45
Pass #40	5-25
Pass #100	0-10
Pass #200)	0-5

a. The grading percentages specified in the above table shall apply to the material after it has been delivered to the construction site as well as when tested at the pit or other source of supply.

b. When the fraction of the dry sample passing the No. 100 mesh sieve is greater than 8% by weight (mass), the sample will be washed as indicated. The amount obtained from washing shall be added to that obtained by dry sieving; and the total amount passing each sieve shall meet the above gradation.

2. Plasticity:

a. When the fraction of the dry sample passing the No. 100 mesh sieve is 4% or less by weight (mass), no plastic limit test will be made.

b. When the fraction of the dry sample passing the No. 100 mesh sieve is greater than 4% and not greater than 8% by weight (mass), that fraction shall not have sufficient plasticity to permit the performing of the plastic limit test using AASHTO Method T 90.

When the fraction of the dry sample passing the No. 100 mesh sieve is greater than 8% by weight (mass), the sample will be washed; and the additional material passing the No. 100 mesh sieve shall be determined by AASHTO Method T 146, except that the No. 100 mesh sieve will be substituted for the No. 40 mesh sieve where the latter is specified in AASHTO Method T 146. The combined materials that passed the No. 100 mesh sieve shall not have sufficient plasticity to permit the performing of the plastic limit test using AASHTO Method T 90.

3. **Test for Resistance to Abrasion.** Gravel materials shall show a loss on abrasion of not more than 50% using AASHTO Method T 96.

4. **Soundness:** When tested with magnesium sulfate solution for soundness using AASHTO Method T104, coarse aggregate shall not have a loss of more than 15% at the end of five cycles.

PART 3 - EXECUTION

3.1 CONSTRUCTION METHODS

A. Pervious structure backfill shall be placed adjacent to structures, retaining walls, box culverts, and elsewhere as called for. It shall be placed above a plane extending on a 2 to 1 slope from the upper edge of the footing to the top of the embankment, or as shown on the plans. Where the face of undisturbed material is above or beneath this slope plane, the amount of pervious structure backfill shall be decreased or increased accordingly, if ordered by the Engineer.

B. In filling behind retaining walls, box culverts, or other structures, the fill is placed against undisturbed material, or against compacted embankments having a length in a direction at right angles to the structure or culvert not less than twice the height of the structures against which the fill is placed. The slope of the embankment on which the pervious structure backfill is to be placed shall be plowed deeply or cut into steps before and during the placing of pervious structure backfill so both types of material will be thoroughly bonded and compacted.

C. Each layer of pervious structure of backfill shall be spread to a thickness not exceeding 6 inches in depth after compaction and shall be thoroughly compacted as directed by the engineer by the use of power rollers or other motorized vehicular equipment, by tamping with mechanical rammers or vibrators, or by pneumatic tampers. Any equipment not principally manufactured for compaction purposes and equipment which is not in proper working order in all respects shall not be used within the area described above.

D. Special attention shall be given to compaction in places close to walls where motorized vehicular equipment cannot reach. Within 3 feet of the back face of walls and within a greater distance at angle points of walls, each layer of pervious structure backfill shall be compacted by mechanical hammers, vibrators, or pneumatic tampers.

E. The dry density of each layer of pervious structure backfill formed from broken or crushed stone, broken or crushed gravel or reclaimed miscellaneous aggregate free of bituminous concrete shall have a dry density after compaction that is no less than 100% of the dry density for that material when tested in accordance with AASHTO T180, Method D. If a layer formed from reclaimed miscellaneous aggregate containing bituminous concrete is placed as pervious structure backfill, the wet density of this layer after compaction shall not be less than 100 percent of the wet density for that material when tested in accordance with AASHTO T180, Method D.

F. In this test, material retained on the 3/4-inch sieve shall be replaced with material retained on the No. 4 sieve, as noted as an option in the specifications for this test.

G. Each layer of the pervious structure backfill shall be compacted at optimum moisture content. No subsequent layer shall be placed until the specified compaction is obtained for the previous layer.

H. Where weep holes are installed, bagged stone shall be placed around the inlet end of each weep hole, to prevent movement of the pervious material into the weep hole.

END OF SECTION 31 23 23.14

SECTION 31 23 23.33 – FLOWABLE FILL

PART 1 GENERAL

1.1 SECTION INCLUDES

A. A self consolidating, rigid setting material to be used in backfills, fills, structural fills and elsewhere as indicated on the plans, or as directed by the Engineer. The flow and set time characteristics of flowable fill shall be designed to meet the specific job conditions. All flowable fill material covered by this specification shall be designed to be hand excavatable at any time after placement. It shall be composed of a mixture of portland cement, aggregate, and water with the option of using fly ash, slag cement, air-entraining agents, and other approved admixtures.

1.2 SUBMITTALS

A. See Section 01 33 00, Submittal Procedures and Section 01 33 00.13 – Document Control for submittal procedures.

1.3 RELATED REQUIREMENTS

A. Section 01 55 26 Traffic Control, for maintenance and protection of traffic requirements

B. Section 03 30 00 Cast-in-Place Concrete, for concrete requirements.

C. Section 31 23 16 Excavation, for excavation requirements

D. Section 31 23 16.13 Trenching for trenching requirements

PART 2 PRODUCTS

2.1 MATERIALS

A. Mix Design: All materials utilized in the flowable fill mix design shall be in accordance with the applicable requirements of Section 03 30 00 Cast-in-Place Concrete.

B. Composition: The composition of the flowable fill shall be in accordance with the requirements set forth in Section 03 30 00 Cast-in Place Concrete, as well as the applicable sections of ACI 229R. The Trade Contractor shall submit each proposed mix design, with all supporting data, to the Engineer for review and approval at least two weeks prior to its use.

C. The setting time of flowable fill materials shall be designed so as to achieve the strength necessary to comply with the time constraints called for under the Maintenance and Protection of Traffic requirements of the project specifications. The use of chloride accelerators is not permitted.

D. The minimum compressive strength of the flowable fill material shall be 30 pounds per square inch (psi) and the maximum compressive strength of the flowable fill shall be 150 pounds per square inch (psi) when tested in accordance with ASTM D4832 after 56 days.

E. The flowable fill mix design shall utilize a nominal maximum size of No. 8 aggregate as specified in section 31 23 23.

PART 3 EXECUTION

3.1 CONSTRUCTION METHODS

A. Flowable fill shall only be placed when the ambient temperature is at least 32° F and rising. Flowable fill material shall be deposited within 2 hours of initial mixing.

Flowable fill may be placed by chutes, conveyors, buckets or pumps depending upon the application and accessibility of the site. Should voids or cavities remain after the placement of the flowable fill, the Trade Contractor shall modify the placement method or flow characteristics of the flowable fill. Voids or cavities which have not been filled properly shall be corrected as directed by the Engineer and at the Trade Contractor's expense.

END OF SECTION 31 23 23.33

SECTION 31 35 19.17 – GEOTEXTILE (SEPARATION – HIGH SURVIVABILITY)

PART 1 - GENERAL

1.1 DESCRIPTION

A. This item shall consist of furnishing and installing geotextile in the locations and to the dimensions shown on the plans as directed or as approved by the Engineer.

1.2 SUBMITTALS

A. See Section 01 33 00 – Submittal Procedures and Section 01 33 00.13 – Document Control.

PART 2 - PRODUCTS

2.1 MATERIALS

A. The geotextile shall be non-rotting, acid and alkali resistant and have sufficient strength and permeability for the purpose intended, including handling and backfilling operations. Fibers shall be low water absorbent. The fiber network must be dimensionally stable and resistant to delamination. The geotextile shall be free of any chemical treatment or coating that will reduce its permeability. The geotextile shall also be free of any flaws or defects which will alter its physical properties. Torn or punctured geotextiles shall not be used. For each specific use, only geotextiles that are already on the Connecticut Department of Transportation's Approved Products List for the geotextile type will be used. The Engineer reserves the right to reject any geotextile he deems unsatisfactory for a specific use. The brand name shall be labeled on the geotextile or the geotextile container. Geotextiles which are susceptible to damage from sunlight or heat shall be so identified by suitable warning information on the packaging material.

B. Geotextiles susceptible to sunlight damage shall not be used in any installations where exposure to light will exceed 30 days, unless specifically authorized in writing by the Engineer.

C. Materials incidental to and necessary for the installation of the geotextile, such as, but not limited to sewing thread, staples, pins, etc., shall conform to the requirements of the manufacturer of the geotextile.

PART 3 - EXECUTION

3.1 CONSTRUCTION METHODS

A. The geotextile shall be installed at the locations and to the dimensions shown on the plans or as directed by the Engineer. Geotextile shall be installed as recommended by the manufacturer for the specific use or purpose intended, or as otherwise approved by the Engineer.

END OF SECTION 31 35 19.17

SECTION 31 41 00 - SHORING

PART 1 GENERAL

1.1 SECTION INCLUDES

A. Any type of adequately braced temporary retaining wall such as temporary sheet piling which the Trade Contractor elects to build to satisfy, and which does satisfy, the condition that existing facilities be properly retained during excavation or fill for the placement of substructure or other facilities. Temporary earth retaining system shall be designed by the Trade Contractor and constructed where shown on the plans. This system shall be removed upon completion of the permanent work unless ordered left in place by the Engineer.

1.2 RELATED REQUIREMENTS

A. Document Maintenance of Way & Employee Parking Soil and Rock Report: Geotechnical report; bore hole locations and findings of subsurface materials.

B. Section 31 23 16 Excavation

C. Section 33 41 10 Pumping Station

1.3 SUBMITTALS

A. Submittals shall be performed as directed by Section 01 33 00 Submittal Procedures and Section 01 33 00.13 – Document Control, for submittal procedures except as modified herein.

B. The working drawings and design calculations shall be prepared, sealed, and signed by a Professional Engineer, licensed in the State of Connecticut. The furnishing of such plans shall not serve to relieve the Trade Contractor of any part of his responsibility for the safety of the work or for the successful completion of the project.

C. The Trade Contractor shall submit to the Engineer for approval, plans showing the proposed method of construction prior to the start of such construction. If no limits are shown on the plans for the sheet piling that may be ordered left in place, then the plans for the entire temporary installation shall be submitted for approval. If no portion of the temporary earth retaining system is ordered left in place, all parts of the temporary earth retaining system shall be removed upon completion of the work for which it was provided.

PART 2 PRODUCTS

The materials for the work shall conform to the following requirements:

A. Steel sheet piling shall conform to the requirement of ASTM A 328.

B. Timber sheet piling shall, unless otherwise definitely noted on the plans or in the specifications, may consist of any species which will satisfactorily stand driving. It shall be sawn or hewn with square corners and shall be free from worm holes, loose knots, wind shakes, decayed or unsound portions, or other defects which might impair its strength or tightness.

   The piles shall be of the dimensions shown on the plans or as directed, either cut from the solid material or made by building up the piles of three planks securely fastened together. The piles shall be drift sharpened at their lower ends so as to wedge the adjacent piles tightly together..

C. Materials other than steel or timber, or a combination of these may be used provided they are properly designed for the purpose intended. Systems utilizing other material(s) shall conform to the manufacturer's specifications and project specifications. The parts list shall be furnished for the proprietary system and the Trade Contractor shall provide the material certificates for the parts.

PART 3 EXECUTION

3.1 CONSTRUCTION METHODS

A. Temporary earth retaining system shall be safely designed and shall be carried to adequate depths and braced as necessary for proper performance of the work. Construction shall be such as to permit excavation or fill as required. Interior dimensions shall be such as to give sufficient clearance for construction of forms and their inspection and for battered pile clearance when necessary. Movements of the system or bracing which prevent the proper completion of the substructure shall be corrected at the sole expense of the Trade Contractor. No part of the temporary earth retaining system or bracing shall be allowed to extend into the substructure without written permission of the Engineer.

B. The excavation shall be backfilled and properly compacted, prior to removal of the system unless otherwise permitted by the Engineer.

END OF SECTION 31 41 00

SECTION 31 62 13.19 – PRECAST PRESTRESSED CONCRETE PILES

PART 1 – GENERAL

1.1 DESCRIPTION

A. This item shall consist of furnishing and driving foundation piles of the type and dimensions designated. Piles shall conform to and be installed in accordance with these specifications, and at the location, and to the elevation, penetration and/or capacity shown on the drawings, or as directed by the CTDOT Project Manager.

B. Test piles shall be piles of the type specified, driven in advance of placing orders for the piles, for the purpose of determining length or bearing capacity of piles. The Trade Contractor shall furnish the piles in accordance with an itemized order list which will be furnished by the CTDOT Project Manager, showing the number and length of all piles. When test piles are specified, the pile lengths shown on the drawings are for estimating purposes only. The actual lengths to be furnished for production piles will be determined by the CTDOT Project Manager after the test piles have been driven.

C. The project borings should be considered in developing the pile driving program. The Trade Contractor is referred to the geotechnical reports for information concerning subsurface conditions.

PART 2 - PRODUCTS

2.1 PRESTRESSED CONCRETE PILES

A. Prestressed Concrete Piles indicated on the drawings shall be furnished to the required lengths without splices and shall conform to the requirements of paragraphs 1 and 2 below

1. Precast concrete piles shall be in strict accordance with the details shown on the plans or in the project specifications. The materials shall conform to the following requirements:

a. Concrete: The concrete for the piles shall be air-entrained concrete composed of Portland cement, fine and coarse aggregates, admixtures and water. The air-entraining feature may be obtained by the use of either air-entraining Portland cement or an approved air-entraining admixture. The entrained air content shall be not less than 4% or more than 6%.

The Contractor shall design and submit for the approval of the Engineer a concrete mix which shall attain a minimum 28-day compressive strength as shown on the drawings. The Contractor shall further provide a certified statement that the mix submitted shall meet the requirements.

b. Water Reducing Admixture: The Contractor may submit, for approval of the Engineer, a water- reducing admixture for the purpose of increasing the workability and reducing the water requirement for the concrete.

c. Calcium Chloride: The addition to the mix of calcium chloride, or admixtures containing calcium chloride, will not be permitted.

2. **Materials:** Materials for pretensioned members shall conform to the following requirements:

   a. **Concrete:** The concrete for the members shall be air-entrained concrete composed of Portland cement, fine and coarse aggregates, admixtures and water. The air-entraining feature may be obtained by the use of either air-entraining Portland cement or an approved air-entraining admixture. The entrained air content shall be not less than 4% or more than 6%.

   b. **Prestressing Steel:** Prestressing elements shall be uncoated, high tensile strength, seven-wire strand conforming to the requirements of AASHTO M 203.

      Before incorporating the elements into the work, a minimum of one sample, 7 feet in length and one sample, 1 foot in length from each reel shall be furnished to the Engineer for testing. When reel packs are identified with the same heat number, only one reel pack need be tested for every 5 reel packs.

   c. **Reinforcing Steel and Tie Wire:** All deformed bars, stirrups, dowels, threaded dowels and tie wire shall conform to these requirements:

      - Uncoated bar reinforcement shall conform to the requirements of ASTM A 615/A 615 M Grade 60.

      - Epoxy coated bar reinforcement shall conform to the requirements of ASTM A 615/A 615M, Grade 60 and shall be epoxy coated to the requirements of ASTM A 775/A 775M.

      - Galvanized bar reinforcement shall conform to the requirements of ASTM A 615/A 615M, Grade 60 and be galvanized, after fabrication, to the requirements of ASTM 767/A 767 M, Class 1, including supplemental requirements.

      - Weldable bar reinforcement shall conform to the requirements of ASTM A 706/A 706 M.

      - Wire shall be cold-drawn steel wire conforming to the requirements of ASTM A 82 (AASHTO M 32).

      - Welded steel wire fabric, when used as reinforcement in concrete, shall conform to the requirements of ASTM A 185 (AASHTO M 55).

   d. **Paint** for the main prestressing strand ends shall conform to the requirements of AASHTO M 243for coating material.

   e. **Strapping** for the beams shall be 3/4 inch x 0.035 inch, uncoated or galvanized, heavy-duty steel strapping having a minimum ultimate tensile strength of 110,000 psi. Strapping shall be obtained from a manufacturer approved by the Engineer.

      Before incorporating the strapping in the work, samples of the strapping at least 3 feet long shall be furnished from each coil for testing. Approval of the material shall be obtained before the material is incorporated in the work.

f. **Lifting Hooks, Pipe Sleeves, Base Protective Plates, Threaded Inserts,** devices and attachments shall be of the size indicated on the plans or of a design satisfactory for the purpose intended.

g. **Transverse Tie Strands** shall be galvanized 7-wire strand, of the size noted on the plans, specially manufactured for prestressing, and shall conform to the pertinent requirements of paragraph a. Prestressing Steel above. The tie strands shall be coated with an approved high quality corrosion-resistant mastic and inserted into a black polyethylene tube having a minimum wall thickness of 0.032 inch. The strands shall be clamped at each end by an aluminum strand vise coated with clean vinyl paint or an approved equal.

B. Paragraphs A.1 and A.2 above are modified as follows:

1. Concrete: The concrete for prestressed concrete piles shall meet the minimum strength requirements as noted on the drawings and shall withstand severe sulfate exposure. The concrete shall be air-entrained concrete and shall consist of Portland cement, other approved cementitious material (when used), fine and coarse aggregates, admixtures, and water. The concrete shall meet the following requirement when tested in accordance with ASTM C 1012:

   a. Expansion $\leq$ 0.05% at 6 months.

   b. The air-entraining feature may be obtained by the use of either air-entraining Portland cement or an approved air-entraining admixture. The entrained air content shall be not less than 4 percent or more than 6 percent.

   c. Water used in concrete shall be clean, potable, and free of substances injurious to concrete.

   d. Calcium chlorides will not be permitted.

   e. Aggregates shall comply with ASTM C33 and have a maximum aggregate size of 3/4-inch.

   f. Slump shall be 3 inch maximum.

   g. Water-reducing admixtures shall comply with ASTM C494.

   h. The Trade Contractor shall design and submit for the approval of the CTDOT Project Manager a concrete mix which shall demonstrate resistance to severe sulfate action, and shall attain a minimum 28-day compressive strength of 6000 psi or as shown on the drawings. The Trade Contractor shall further provide a certified statement that the mix submitted shall meet the requirements. The compressive cylinder strength at the time of transfer of prestressing load shall be a minimum of 4000 psi, or as shown on the drawings.

   i. No pile shall be removed from the casting plant, nor transported to the work site, nor be driven until they are at least 48 hours old, and the compressive strength of the concrete in the pile has attained a strength of at least the specified 28-day compressive strength of 6000 psi or as shown on the drawings, based on test cylinders cast from same batches and cured under same conditions as pile concrete. With each pile delivery, provide the CTDOT Project Manager with documentation in acceptable form indicating that concrete used in piles had attained minimum compressive strength of 6000 psi or as shown on the drawings, prior to delivery of

piles to site. Pile materials shall also be subject to on-site inspection for conformance with specifications.

2. Portland Cement: Cement used in the fabrication of all prestressed precast concrete piles shall consist of ASTM C150 Type V Portland cement or other approved Portland-pozzolan cement providing comparable sulfate resistance when used in concrete.

3. Other Approved Cementitious Material (when used): Other cementitious material which may be used in the fabrication of all prestressed precast concrete piles consists of a.) fly ash or natural pozzolan meeting ASTM C 618, or b.) silica fume meeting ASTM C 1240, or c.) slag meeting ASTM C 989.

4. Material and Mill Certificates: Provide material and mill certificates as specified herein. Material and mill certificates shall be signed by manufacturer and Trade Contractor, certifying that each material item complies with, or exceeds, specified requirements. Provide certification from admixture manufacturers that chloride content complies with specification requirements.

5. Concrete Strength: With each pile delivery, submit results of concrete strength tests conducted on samples cured in the same environment as the piles. No piles will be accepted unless accompanied with delivery by concrete strength data.

6. Bitumen Coating: Bitumen coating shall be an asphalt type bitumen conforming to ASTM D 946, with a minimum penetration grade 80 (ASTM D 5) at the time of pile driving. Bitumen coating shall be applied uniformly over an asphalt primer.

   a. Primer: Primer shall conform to the requirements of ASTM D 41.

7. Calculations: The Trade Contractor shall submit calculations sealed by a Registered Professional Engineer in the State of Connecticut showing design for in place pile design loads as indicated on drawings and the effect of driving, lifting, and handling. It is the responsibility of the precast fabricator and his engineer to provide reinforcement for in place pile design loads as well as any reinforcement required for driving, lifting, and handling and to submit the design for review. See Section 01 33 00 - Submittal Procedures and Section 01 33 00.13 - Document Control.

8. Shop Drawings: Submit shop drawings sealed by a Registered Professional Engineer in the State of Connecticut showing pile sizes, tip details, concrete strength at 28 days, reinforcing, concrete strength at release, and all embedments. Also include on shop drawings proposed lifting method and pick-up points, and all reinforcing and embedments required for in place pile loads, lifting and handling. See Section 01 33 00 - Submittal Procedures and Section 01 33 00.13 - Document Control.

2.2 QUALITY CONTROL

A. Materials: The Pile Trade Contractor or his pile supplier shall provide daily quality control of concrete and other materials for piles manufactured at the plant. From time to time, the Engineer will visit the plant to observe pile manufacture. The Trade Contractor shall fully cooperate with the CTDOT Project Manager to facilitate observing and assisting in taking and storing samples.

B. Certification of quality of pile materials to be used in the work shall be furnished, in a form acceptable to the CTDOT Project Manager, at the time of delivery of materials to the site.

Pile materials shall also be subject to on-site observation for conformance with specifications.

2.3 QUALIFICATIONS

A. The Trade Contractor is responsible for quality control, including workmanship and materials furnished by his trade subcontractors and suppliers.

B. Fabricator Qualifications: Only a firm which has had a minimum of 5 years successful experience in the fabrication of precast-prestressed concrete units similar to the units required for this project will be acceptable. Fabricator must have sufficient production capacity to produce the required units without causing delay in work. Upon request by the CTDOT Project Manager, written evidence shall be submitted to show experience, qualifications, adequacy of plant facilities, and quality control procedures.

C. Fabrication Qualifications: Produce precast-prestressed concrete piles at a fabricating plant engaged primarily in the manufacturing of similar units, unless plant fabrication or delivery to project site is impractical. If units are produced at locations other than the fabricating plant, maintain procedures and conditions for quality control which are equivalent to plant production. The fabricator is to comply with PCI MNL - 116 "Manual for Quality Control for Plants and Production of Precast Prestressed Concrete Products."

D. Allowable Fabrication Tolerances: Fabricate prestressed concrete piles to dimensional tolerances specified in PCI Design Handbook, 5th Edition, Chapter 8 as published by the Prestressed Concrete Institute.

E. Welder Qualifications: Qualify welders, welding processes and procedures in accordance with requirements of the current AWS Structural Welding Code.

2.4 MANUFACTURE

A. Construction Methods**:** The members shall be manufactured in a concrete products plant with approved facilities and equipment for pretensioning.

1. **Shop Drawings:** Before fabrication, the Contractor shall submit shop drawings to the Engineer for approval. These drawings shall include complete details of the methods, materials and equipment he proposes to use. Such details shall outline the method and sequence of stressing and give complete material designations and details of the prestressing steel and anchorage devices, and other data pertaining to the prestressing operations.

2. **Prestressing:** In all methods of tensioning, stress induced in the strands shall be determined by monitoring applied force and independently by measurement of elongation. Applied force may be monitored by direct measurement using a pressure gauge piped into the hydraulic pump and jack system, dynamometer or load cell. The two control measurements shall agree with their computed theoretical values, within a tolerance of ± 5%. If discrepancies are in excess of 5% between the two calculated forces, determined by elongation measurement and gauge reading, the tensioning operation shall be suspended and the source of error determined and evaluated by qualified personnel before proceeding. Additionally, the control measurements of force and elongation shall algebraically agree with each other within a 5% tolerance. If the measurements do not

agree within 5% a load cell shall be added at the dead end and if force measurements agree within 5% between the gauge at a live end and the load cell at the dead end, the elongation agreement may be waived with permission from the Engineer.

After an initial force has been applied to the tendon, reference points for measuring elongation due to additional tensioning forces shall be established.

Calculations for elongation and gauge readings must include appropriate allowances for friction in the jacking system, strand seating, movement of abutments, bed shortening if under load, thermal corrections, and any other compensation for the setup. Copies of all calculations shall be made available to the Engineer.

Hydraulic gauges, load cells, or other devices for measuring the stressing load shall be graduated so they can be read within a tolerance of ±2%. Gauges, jacks, and pumps shall be calibrated as a system in the same manner as they are used in tensioning operations. Calibrations shall be performed by an approved testing laboratory, calibration service, or under the supervision of a licensed professional engineer, and a certified calibration curve shall accompany each tensioning system. Pressure readings can be used directly if the calibration determines a reading is within a ±2% tolerance of actual load. Calibrations shall be performed at any time a tensioning system indicates erratic results and, in any case, at intervals not greater than six months.

Those producers using multiple strand tensioning systems may use a "Master Gauge" monitoring system for ongoing calibration of their systems after an initial calibration as a total system. The producer shall have a master gauge calibrated every six months by an approved testing laboratory, calibration service or under the supervision of a licensed professional engineer. Production gauges shall be checked by plumbing the master gauge adjacent to the production gauge and recording pressures shown on both gauges throughout the normal operating range. Should the difference in gauge pressures exceed 2%, the production gauge shall be taken out of service. This check shall be performed at any time a tensioning system indicates erratic results and, in any case, at intervals not greater than 6 months.

Pressure gauges or other measuring devices, such as digital readout, shall have a full range of measurement of 1-1/2 to 2 times their normal working pressure, whether for initial or final load. Tensioning methods employing hydraulic gauges shall have appropriate bypass valve snubbers and fittings so that the gauge pointer will not fluctuate but will remain steady until the jacking load is released.In all methods of pretensioning, the load shall be applied in two increments. An initial load is applied to the individual strands to straighten them, eliminate slack, and provide a starting or reference point for measuring elongation. The final load is then applied for which elongation of strands is computed and measured. This method of operation shall be mandatory except as noted below in multiple strand tensioning.

Initial tensioning shall not exceed 15% of the specified tensioning force, or 3,000 pounds, whichever is greater. In single-strand tensioning, the initial and final loads may be applied in immediate succession on each strand.

At the completion of initial tension, reference marks shall be established from which elongation by final tensioning forces can be measured. Elongations shall then be

accurately measured from these reference points. Elongations shall be measured as outlined hereinafter.

Elongation measurement shall take into account all operational losses and compensations in the tensioning system.

a. Final Stressing of Straight Strands:

(1) **Single-strand tensioning:** After application of the initial load and establishment of reference marks for measuring elongation, the full strand load shall be applied. Loads indicated by gauging systems shall control the tensioning, with elongation checked on every strand. An exception is the case of a completely open bed with no headers or other possible sources of friction. In such instances, strand elongation shall be checked on only the first and last strands and 10% of all others.

(2) **Multiple-strand tensioning:** Following application of initial stress and seating of each strand on the anchorage header, reference marks shall be established for measuring elongation and slippage. Reference marks for slippage shall be made by marking a straight line across the strands in each row along the face of the anchorage. For uniform application of load to strands, the face of anchorage at final load must be in a plane parallel to its position under initial load. Parallel movement shall be verified by measurement of movement on opposite sides of the anchorage and a check of its plumb position before and after application of the final load.

b. Final Stressing of Draped Strands: Draped pretensioning strands may be finally stressed by one of the following methods:

(1) **Partial stressing and subsequent strains:** In this method, the strands shall be tensioned in a straight position or one a partially draped trajectory to a predetermined, intermediate stress value between initial and final stress. The final stress shall be induced by strains resulting from lifting or depressing strands at all other points of change in strand alignment. Final position and stress shall be offset symmetrically about the center of the setup to distribute friction evenly. Stress and elongation shall be measured as specified for the intermediate stress value. Suitable stress measurements at each anchorage at each end of the bed shall verify calculated strand stresses within 5%.

(2) **Final stressing in draped position:** In this method the strands are stressed to final value in their draped position for the full length of the bed. The strands shall pass over devices which effectively minimize friction at all deflection points. Stress and elongation shall be measured as specified.

When final stressing is done by jacking strands from one end of the bed, even when that tensioning is within tolerance, the force shall be measured on at least two strands at the far end. This force shall not be below the theoretical values by more than 5%. If the theoretical elongation has not been attained at one end of the bed when the force, as indicated by pressure gauge or load cell, is exceeded by 5%, the strand shall be jacked from the other end of the bed to the theoretical elongation. If this requires an overstress as indicated by the gauge in excess of 5% overload, the number of deflection points on the bed shall be reduced until the elongation can be attained with

not more than 5% overload or the hardware shall be improved to reduce friction. Remaining deflection points shall then be achieved as outlined.

If elongation is not obtained within 5% tolerance when theoretical force has been applied, the strand may be temporarily overstressed to overcome friction. Overstress shall not exceed 80% of the specified tensile strength of the strand. Strands shall not be seated in this overstress condition. Provision shall be made to reduce the force on the strand before anchorage. Anchorage by seating of strand into chucks shall be done within 5% tolerance of theoretical force.

Stress shall not be transferred to pretensioned members until concrete strength, as indicated by test cylinders or any other properly calibrated nondestructive test technique, is in accordance with specified transfer strength.

If concrete has been heat-cured, detensioning shall be performed immediately following the curing period while the concrete is still warm and moist.

In all detensioning operations, the prestressing forces shall be kept nearly symmetrical about the vertical axis of the member and shall be applied in a manner that will minimize sudden shock or loading.

Maximum eccentricity about vertical axis of the member shall be limited to 10% of the strand group. Limitation of vertical axis eccentricity shall be at the initial cutting of strands at the ends of the bed and as strands are cut between members in the setup. For unusual shapes and heavily stressed shapes, production drawings shall show detensioning procedures.

Forms, ties, inserts, or other devices that would restrict longitudinal movement of the members along the bed shall be removed or adequately loosened. Hold-downs shall be removed at the appropriate time for the product and setup. Alternately, detensioning shall be performed in such a manner sequence that longitudinal movement is precluded.

In a single strand detensioning, both ends of the bed shall be released simultaneously and symmetrically to minimize sliding of members.

The sequence used for detensioning strands shall be according to an approved pattern and schedule that keeps the stresses nearly symmetrical about the vertical axis of the members as specified above.

In multiple strand detensioning, strands shall be released simultaneously by hydraulic dejacking. The total force shall be taken from the header by the jack, then released gradually.

The overstress required to loosen lock nuts or other anchoring devices at the header shall not exceed the force in the strand by 5%.

The maximum permissible time for holding tensioned strands in the bed before starting concrete placement is 36 hours.

Prestressing details that have been approved by the Engineer shall not be deviated from unless details of such deviations are approved in advance of use. The approval by the Engineer of any proposed method, materials, or equipment shall not relieve the Contractor of full responsibility for successfully completing the prestressing operations in accordance with the requirements of these specifications.

3. **Forms:** The forms for the beams and deck units shall be of substantial construction. A firm compressible material as indicated on the approved shop drawings, shall form the bottom of the casting bed near the ends of the beams in order that cracking and chipping of the beams will be minimized at the time of load transfer. A minimum concrete cover of 1 1/2 inches must be maintained for prestressing strands by the use of approved spreaders or by bundling in areas adjacent to openings, cavities, or inserts. Stirrups and ties shall have a minimum cover of 1 inch at these locations.

   Side forms carrying no load may be removed after 24 hours with the permission of the Engineer or after the concrete has reached the strength required at time of transfer (f'ci).

4. **Placing Concrete:** Concrete shall not be deposited in the forms until the Engineer has inspected the placing of the prestressing elements and reinforcing steel, including all other cast-in-place components, and has given his approval thereof.

   Concrete shall not be deposited into the forms when the ambient temperature is below 40°F or above 100°F, unless adequate heating or cooling procedures have been previously approved by the Engineer. The concrete temperature shall be 60°F to 90°F at the time of placement. At no time will truck-mixed or transit-mixed concrete be allowed.

   Production during the winter season, from November 15 to March 15 inclusive, will be permitted only on beds located in a completely enclosed structure of suitable size and dimension that provides a controlled atmosphere for the protection of the casting operation and the product.

   Outside concreting operations will not be permitted during rainfall unless the operation is completely under cover.

   Void forms shall be held in place against uplift or lateral displacement during the pouring and vibrating of the concrete by substantial wire ties or other satisfactory means as approved by the Engineer.

   The concrete shall be vibrated internally, or externally, or both, as ordered by the Engineer. The vibrating shall be done with care in such a manner as to avoid displacement of reinforcing steel, prestressing elements, voids, forms, or other components. There shall be no interruption in the pouring of any of the members. Concrete shall be carefully placed in the forms and vibrated sufficiently to produce a surface free from imperfections such as honeycombing, segregation, cracking, or checking. Any deficiencies noted in the members may because for rejection.

5. **Finishing:** Prestressing elements shall be recessed 1/8 inch to 1/4 inch into the member. The recess shall be patched with material approved by the Engineer. When the patch material has cured, it shall be coated with a waterproof material approved by the Engineer. Special care shall be given to the finishing of exposed surface areas. The surface area of all shear keys shall be blast cleaned. Additional finishing of members shall be as shown on the plans or as otherwise directed by the Engineer.

   Formed surfaces shall not be finished in any manner unless permitted by the Engineer. Top surfaces shall be finished as follows:

6. **Test Cylinders:** During the casting of each prestressed member, the Contractor shall make test cylinders under the supervision of a representative of the Department. The dimensions, type of cylinder mold and number of cylinders shall be specified by the Engineer. At least four test cylinders shall be cured by the same methods employed for the curing of the member and shall be used to verify the (f'ci) required for transfer of the prestressing load. The remaining test cylinders shall be used to determine when the required 28-day strength (f'c) has been achieved.

   Failure of any of the 28-day test cylinders to meet 90% of the minimum compressive strength or failure of the average to meet the full minimum compressive strength requirement may be cause for rejection.

7. **Curing:** Unless otherwise shown on the plans or indicated in the project specifications, prestressed concrete members shall be cured in accordance with the latest edition (including Interim Specifications) of "AASHTO Standard Specifications for Highway Bridges, Division II."

8. **Patching:** No patching of the complete members will be allowed unless permitted by the Engineer. The Contractor's proposal for methods and materials to be used in the patching operation shall be submitted to the Engineer for his approval. Failure to do so may be cause for rejection.

9. **Quality Control:** Quality control shall be the responsibility of the fabricator. Quality assurance shall be the prerogative of the State. At no expense to the State, there shall be provided a separate office building or room having an area of at least 80 square feet, with the least dimension to be 6 feet. This office shall be equipped with a suitable heating system capable of maintaining a minimum temperature of 65°F. It shall be clean and free of extraneous material and equipment. Sufficient light and ventilation shall be provided. During the summer months, the office temperature shall not exceed the ambient temperature. A desk and chair shall be provided for the inspector, and a telephone shall be within audible range of the office.

   The quality of fabrication and construction and the dimensional tolerance of the prestressed members shall conform to the limits specified in the "Manual for Quality Control for Plans and the Production of Precast Prestressed Concrete Products (MNL-116-Latest Edition)" published by PCI, unless otherwise specified herein, except that: 1. The tolerance for horizontal alignment shall be measured from a straight line intersecting the ends of beam at either or both faces of top and bottom flanges. 2. The tolerance for beam seat bearing area shall apply to the entire width of the member. Deviations in excess of the permissible tolerances will be cause for rejection.

10. **Marking:** Beams and deck units shall be identified as to project, structure, casting date, and position in the structure by means of a non-corrosive metal tag embedded permanently in the bottom of the members at the mark end.

11. **Lifting Hooks:** The number and location of lifting hooks shall be determined by the Contractor.

12. **Special Considerations:** Before erection, the Contractor shall recess, clean, patch and paint ends of strands in a neat and workmanlike manner. Projecting fins and surface imperfections shall be removed. The bearing area at the bottom ends of the beams and deck units must lie in the same plane as the grade of the beam or deck units in their final erected position after application of full dead load. Prior to erection, any deviations of the bearing area from a true plane shall be remedied by grinding, by applying an approved epoxy mortar, or by a combination of both as approved by the Engineer.

13. **Handling and Storage:** Care shall be taken during storage, transporting, hoisting, and handling of all prestressed members to prevent cracking or damage. Members damaged by improper storing, transporting, or handling shall be replaced by the Contractor at his expense.

B. The piles shall be manufactured in accordance with 2.4.A except as follows:

1. Piles shall be furnished to the required lengths without splices.

2. Piles shall be square precast-prestressed concrete piles with minimum side dimensions as shown on the drawings. All precast-prestressed concrete piles shall be designed and reinforced in accordance with current standards of the Joint Committee of AASHTO and PCI . Hollow core piles will not be accepted.

3. The effective prestress in piles shall be a minimum of 700 psi or as shown on the drawings.

C. Forms: The forms for the piles shall be of substantial construction and shall produce a uniformly smooth surface on all formed sides. A minimum concrete cover of 2 inches shall be maintained for prestressing elements by the use of spreaders or by bundling in areas adjacent to openings or inserts. Ties shall also have a minimum cover of 2 inches at these locations. Side forms carrying no load may be removed after 24 hours with the permission of the CTDOT Project Manager or after the concrete has reached the minimum transfer strength as required by Subarticle M.09.02-6.

D. Finishing: The topside surface of the piles shall be given a uniformly smooth steel trowel finish to match the surface of the formed sides. The prestressing elements shall be cut flush or recessed 1/8 in to the top of the pile. Projecting fins and surface imperfections shall be removed in a workmanlike manner. Inserts or other devices shall be removed or recessed to a depth as directed, and the hole or opening patched with non-shrink grout in a workmanlike manner. The patching material shall have a degree of finish comparable to the adjacent surfaces. Additional finishing of piles, if required, shall be as shown on the drawings or as otherwise directed.

1. Precast-prestressed concrete piles shall be cast with a steel bottom plate complying with ASTM A709M Grade 250. The plate shall have a minimum thickness of 1-1/2 inch or as shown on the drawings, have the same lateral dimensions as the pile, and shall be

attached to the pile with dowels as indicated in the AASHTO-PCI Standards or as shown on the drawings.

E. Handling and Storage: Care shall be taken during storage, transporting, hoisting and handling of the prestressed piles to prevent cracking or damage. Damaged piles shall be replaced by the Trade Contractor at his expense. Lifting and support points shall be marked on the piles as required.

1. If for any reason a pile is damaged or its reinforcing is exposed, its use shall not be allowed. Lateral reinforcing at both ends of pile shall be spaced sufficiently close to resist impact stresses due to driving and in no case more than 3 inches. on centers or as shown on the drawings for a distance of 2 feet or as shown on the drawings from the end of the pile and at no more than 6 inches. elsewhere. Top of pile must be perpendicular to longitudinal axis of pile, and ends of any prestressing or reinforcing steel shall be cut flush with top of pile to prevent direct impact on steel during driving.

F. Bitumen Coating: All piles shall have bitumen coating applied from the top to El -41 feet.

1. All surfaces to be coated with bitumen shall be dry and thoroughly cleaned of dust and loose materials. No primer or bitumen shall be applied in wet weather, or when the temperature is below 65 degrees F.

2. The primer shall be applied to the surfaces and allowed to completely dry before the bitumen is applied. Primer shall be applied uniformly at the quantity of one gallon per 100 square feet.

3. Bitumen shall be applied uniformly at a temperature of not less than 300 degrees F, nor more than 350 degrees F, and shall be applied either by mopping, brushing, or spraying. All holes or depressions in the concrete surface shall be completely filled with bitumen. The bitumen shall be applied to a minimum dry thickness of 1/16 inch, but in no case shall the quantity of application be less than 8 gallons per 100 square feet.

4. Bitumen coated piles shall be stored before driving and protected from sunlight and heat. Pile coatings shall not be exposed to damage during storage, hauling or handling. The Trade Contractor shall take appropriate measures to preserve and maintain the bitumen coating. At the time of pile driving, the bitumen coating shall have a minimum dry thickness of 1/16 inch and a minimum penetration value of at least 80 (ASTM D 5). If necessary, the Trade Contractor shall recoat the piles, at Trade Contractor's expense, to comply with these requirements.

PART 3 EXECUTION

3.1 DRIVING PRESTRESSED CONCRETE PILES

A. Pile Driving Equipment

1. Equipment shall be sized to drive at least an 85 foot long pile.

2. Submit manufacturer's literature, including technical and performance literature for pile driving hammer, cushions, leads and other equipment for piles.

B. Hammer: The Trade Contractor is responsible for providing hammers with sufficient energy to drive each pile size and type to the depths indicated on the Plans. The hammer used shall have a delivered energy suitable for the total weight of the pile, the character of the subsurface material, and the pile capacity to be developed. Use a variable energy hammer to drive concrete piles. Hammers should be equipped with real-time read-outs of the driving energy and the ability to adjust the rated hammer energy during pile driving. For precast-prestressed concrete piles, the hammer shall be capable of being “throttled” back to minimize tensile stresses during easy driving.

1. Variable energy hydraulic hammers shall have at least three hydraulic control settings that provide for predictable stroke control. The shortest stroke shall be a maximum of 2 feet for the driving of precast-prestressed concrete piles. The remaining strokes shall be full stroke and approximately halfway between minimum and maximum stroke. Determine the hammer energy according to the manufacturer’s recommendations. When pressure measuring equipment is required to determine hammer energy, calibrate the pressure gauges before use.

2. Furnish to the CTDOT Project Manager all technical specifications and operating instructions related to hammer equipment. All equipment is subject to satisfactory field performance.

C. Hammer Cushion: Impact pile driving equipment designed to be used with a hammer cushion shall be equipped with a suitable thickness of hammer cushion material to prevent damage to the hammer or pile and to insure uniform driving behavior. Hammer cushions shall be made of durable manufactured materials, provided in accordance with the hammer manufacturer's guidelines. Wood, wire rope, and asbestos hammer cushions are specifically disallowed and shall not be used. A striker plate as recommended by the hammer manufacturer shall be placed on the hammer cushion to insure uniform compression of the cushion material. The hammer cushion shall be removed from the helmet and inspected prior to beginning pile driving at each structure or after each 100 hours of pile driving, whichever is less. The Trade Contractor shall replace any hammer cushion whose thickness is less than 75% of the original thickness.

D. Helmet: Piles driven with impact hammers require an adequate helmet or drive head to distribute the hammer blow to the pile head. The helmet shall be axially aligned with the hammer and the pile. The helmet shall be guided by the leads and not be free-swinging. The helmet shall fit around the pile head in such a manner as to prevent transfer of torsional forces during driving, while maintaining proper alignment of hammer and pile. For precast prestressed concrete piles, the pile head shall be plane and perpendicular to the longitudinal axis of the pile to prevent eccentric impacts from the helmet.

E. Pile Cushion: The heads of concrete piles shall be protected by a pile cushion. Pile cushions shall be made of plywood, hardwood, or composite plywood and hardwood materials. The minimum pile cushion thickness placed on the pile head prior to driving shall be at least 4 inches. A new pile cushion shall be provided for each pile. In addition the pile cushion shall be replaced if, during the driving of any pile, the cushion is compressed more than one-half the original thickness or it begins to burn. The pile cushion dimensions shall match the cross sectional area of the pile top. The use of manufactured pile cushion materials in lieu of a wood pile cushion shall be evaluated on a case by case basis.

F. Leads and Templates:

1. Fixed leads or a fixed template are required for pile driving at all foundation locations unless site constraints warrant an exception for an individual site. Leads shall be straight and parallel, not deviating from a straight line by more than 1/2 inch over any 15 foot length. Leads shall be easily adjustable to permit axial driving without interruption if piles deviate from their required alignment.

2. Fixed leads or a fixed template shall be adequate to maintain the pile in proper position and alignment during driving. Locate the template within 5 feet of cutoff or within 5 feet of ground line, whichever is less. Where practical, place the template so that the pile can be driven to cut-off elevation before removing the template.

3. The Trade Contractor shall make a written request for permission not to use fixed leads or a fixed template for those locations where the Trade Contractor drawings alternate means of maintaining pile location and alignment during driving. Such request shall include the site constraint identified by the Trade Contractor and permission is subject to approval by the CTDOT Project Manager. Requests not to use fixed leads or a fixed template based on time or construction cost savings will not be considered site constraints by the CTDOT Project Manager.

G. Wave Equation

1. The Trade Contractor shall perform a wave equation analysis for each pile type, each pile size, each pile length, at each significant variation in soil profile, and at each pile driven for the static load test as shown on the Plans, or as directed by the CTDOT Project Manager. The WEAP analyses shall be based on the submitted pile hammer(s) data and driving descriptions, weights, cushions and other equipment to be used. In addition, WEAP analyses shall be performed for any intermediate condition of concern to evaluate pile stresses, including but not limited to the case of pile penetration through fill into underlying soft organic soils. The wave equation analysis results should show that the proposed pile hammer shall be capable of driving the piles to depths shown on the Trade Contract Plans without exceeding the allowable driving stresses indicated in these specifications with driving criteria of 10 blows per 1 inch or less.

2. The Trade Contractor shall perform a Wave Equation Analysis for each proposed driving system. Submit information including pile hammer data and driving descriptions, weights, cushions and other equipment for use as wave equation analyses for piles (WEAP) input data. The CTDOT Project Manager will use WEAP results to evaluate the suitability of the Trade Contractor's proposed driving system as well as to estimate the driving resistance, in blows per 1 inch, to achieve the pile bearing requirements and to evaluate pile driving stresses. The proposed pile hammer(s) shall be capable of driving piles to the required ultimate bearing capacities as shown on the Plans, or as directed by the CTDOT Project Manager, without exceeding the allowable pile driving stresses.

3. Hammer approval is solely based on the WEAP, PDA and CAPWAP analysis. Provide a hammer system that meets or exceeds the requirements described in the specifications based on the above analysis. Obtain preliminary approval from the CTDOT Project Manager for all proposed driving equipment. All equipment is subject to satisfactory field performance. No change in driving equipment will be permitted without prior approval of the CTDOT Project Manager and a revaluation of the driving system, including but not limited to WEAP analysis. The CTDOT Project Manager may modify

the results from WEAP, if deemed necessary on the basis of information obtained from loading test or dynamic filed measurements.

4. In the event that piles require different hammer sizes, the Trade Contractor may elect to drive with more than one size hammer or with a variable energy hammer, provided the hammer is properly sized, cushioned, and the WEAP analyses show that it will not damage the pile and will develop the required resistance.

5. The WEAP analyses shall be performed by a Registered Professional Engineer in the State of Connecticut, experienced in such work. The Trade Contractor's engineer conducting the wave equation analysis shall be thoroughly familiar with the geotechnical report(s) prepared for this project, the subsurface conditions at the site, and with the proposed pile foundation criteria.

6. The Trade Contractor shall submit a written report with a summary of each WEAP analysis to the CTDOT Project Manager at least 3 weeks prior to pile driving. The submission shall include a copy of the entire WEAP output in the form as specified in the current edition of FHWA publication "Manual on Design and Construction of Driven Pile Foundations". The summary in the report will contain the plotted curves (3) of ultimate resistance vs. blowcount, compressive stresses vs. blowcount, and tensile stresses vs. blowcount for each WEAP output for each embedded length and for several stroke-lengths if a variable stroke hammer is used.

H. Installation Sequence

1. The sequence and scheduling of installation of the test piles and production piles shall be as follows:

2. Install Test Piles that will be load tested in accordance with Dynamic Pile Driving Analysis (PDA) Test and Pile Loading Test. Provide results of the test pile installations to the CTDOT Project Manager for review and acceptance.

3. Install production piles following successful completion and acceptance of the results of the Test Piles (PDA) and pile loading test at the respective locations. Pile lengths for production piles will be determined by the CTDOT Project Manager based on the results of the Test Piles (PDA).

4. Prior to driving piles, the Trade Contractor shall submit to the CTDOT Project Manager for review his sequence of pile driving.

I. Pile Preparation and Driving:

1. Perform all driving in the presence of the CTDOT Project Manager. Pile behavior during driving will be monitored and recorded by the CTDOT Project Manager. No driving shall be done without the presence of the CTDOT Project Manager. The CTDOT Project Manager will record the driving resistance in blows per foot for each foot of the entire driven length of all piles. As part of preparation for pile driving, each pile shall be marked at 1 foot intervals along the entire length by the Trade Contractor. Piles shall be held in leads, driven continuously and without voluntary interruption to the depth shown on the Plans. PDA Testing is to be performed in accordance with the section Dynamic Pile Driving Analysis (P.D.A.) Test on the piles as identified on the Trade Contract Plans.

2. Maintain and operate driving equipment in accordance with manufacturer's recommendations and in accordance with the working drawing submission. Maintain the hammer concentric with the driving train in axial alignment on the pile. Do not use the hammer to limit deviation of the pile during driving by exerting lateral forces or striking at an angle.

3. During pile driving, the compressive and tensile stresses in the piles shall conform to the following requirements:

Compressive Stress	$< 0.85\ f'c$ - effective prestress
Tensile stress	$0.25*\sqrt{f'c}$ + effective prestress

Where, $f'c$ = design compressive strength of concrete = 6000 psi or as shown on the drawings effective prestress = 700 psi or as shown on the drawings

4. When driving through soft soil with little or no resistance to penetration, the length of the hammer stroke shall be reduced to prevent longitudinal tensile stresses in the pile shaft.

5. Carefully plumb leads and pile before driving. Take care during driving to prevent and to correct any tendency of piles to twist or to rotate.

6. When handling and driving long piles, take special precautions to ensure against overstress or leaning away from a true position when driving.

7. Immediately after a pile in a pile group is driven, the Trade Contractor shall establish a reference point and its elevation on the pile for the purpose of checking uplift of the pile tip as additional piles are driven.

J. Location and Alignment Tolerance

1. Piles shall be driven with a variation of not more than 1/4-inch per foot from the vertical or from the batter line indicated, except that piles for trestle bents shall be so driven that the cap may be placed in its proper location without inducing excessive stresses in the piles. Upon completion of driving and released from leads, exposed piles such as in bents shall not have a variation of more than 2 inches at the cut-off elevation from the position shown on the drawings. Unless otherwise permitted in writing by the CTDOT Project Manager, failure to meet this tolerance shall be cause for rejection. Other foundation piles shall not be out of the position shown on the drawings more than 2 inches after driving. The CTDOT Project Manager may require that driving be stopped in order to check the pile alignment. Pulling laterally on piles to correct misalignment, or splicing a properly aligned section on a misaligned section shall not be permitted.

2. If the location and/or alignment tolerances specified are exceeded, the extent of overloading shall be evaluated by the CTDOT Project Manager. If in the judgment of the CTDOT Project Manager, corrective measures are necessary, suitable measures shall be designed and constructed by the Trade Contractor.

K. Heaved Piles

1. Level readings to measure pile heave after driving shall be made by the Trade Contractor at the start of pile driving operations and shall continue until the CTDOT Project Manager determines that such checking is no longer required. Level readings shall be taken immediately after the pile has been driven and again after piles within a radius of 15 feet have been driven. If pile heave is observed, the Trade Contractor shall take accurate level readings referenced to a fixed datum on all piles immediately after installation and periodically thereafter as adjacent piles are driven to determine the pile heave range. All piles that have been heaved more than 1/2 inch shall be redriven at the Trade Contractor's cost, to the required resistance or penetration.

L. Unsatisfactory Piles

1. The method used in driving piles shall not subject the piles to excessive or undue abuse producing crushing and spalling of concrete, injurious splitting, splintering, and brooming of the wood, or deformation of the steel. Misaligned piles shall not be forced into proper position. Any pile damaged during driving by reason of internal defects, or by improper driving, or driven out of its proper location, or driven below the designated cutoff elevation, shall be corrected by the Trade Contractor by a method approved by the CTDOT Project Manager.

2. Piles which have been bent during installation shall be considered unsatisfactory unless the ultimate capacity is proven by load tests performed at the Trade Contractor's expense. If such tests indicate inadequate capacity, corrective measures as determined by the CTDOT Project Manager shall be taken, such as use of bent piles at reduced capacity, installation of additional piles, strengthening of bent piles, or replacement of bent piles.

3. A concrete pile will be considered defective if a visible crack, or cracks, appears around the entire periphery of the pile, or if any defect is observed which, as determined by the CTDOT Project Manager, affects the strength or life of the pile.

M. Cutoff Lengths:

1. Piles that have reached required depth or penetration resistance, as determined by the CTDOT Project Manager, shall be cut off at the elevation shown on the Plans. Cutting shall be done with equipment that will not fracture or damage the concrete below the cut surface or the anchoring reinforcement to remain above the cut off elevation. All pile cutoff material is the property of the Trade Contractor and shall be disposed of off-site, in accordance with local and state regulations.

2. Piles with a blow count for the last 1 foot of driving less than 75% of the equivalent blow count for the approved test pile shall not be cut off until the CTDOT Project Manager reviews the driving information records and approves of the cut off in writing.

3.2 DYNAMIC PILE DRIVING ANALYSIS (PDA) TEST

A. Dynamic measurements following procedures set forth in ASTM D-4945 will be taken during the driving of piles designated as dynamic monitoring test piles. The Trade Contractor shall employ a qualified specialty Consultant, which has successfully completed no less than ten dynamic pile driving tests, to perform the testing and report preparation for all Dynamic Pile Driving Analysis (PDA) Tests to be performed.

B. At least thirty days prior to driving the test piles the Trade Contractor shall submit to the CTDOT Project Manager for review and approval the qualified specialty consultant, as well as the complete installation, and testing procedures. The submittal shall include all necessary pile driving equipment and support facilities to drive the piles to capacities and depths shown on the drawings within allowable stress limits. As part of the submittal the Trade Contractor's Consultant shall perform a wave equation analyses, and a summary report confirming that the pile driving system proposed by the Trade Contractor can meet the capacity, driving resistance and allowable stress limits.

C. All equipment necessary for the dynamic monitoring of the piles such as gages, cables, etc., shall be furnished by the Trade Contractor's Consultant. The equipment shall conform to the requirements of ASTM D-4945, Standard Test Method for High Strain Dynamic Testing of Piles, and be capable of testing the pile to one and one-half times the ultimate pile capacity. An experienced engineer, who has successfully completed no less than ten dynamic pile driving tests, shall operate the Pile Driving Analyzer in the field. The Trade Contractor shall furnish shelter within 100 feet of test location(s) to protect the dynamic test equipment from the elements. The shelter shall be a minimum floor size of 20 sf, with a minimum ceiling height of 7 foot, and an inside temperature maintained between 50° and 85°.

D. The Trade Contractor shall provide power to the test pile locations for the duration of the dynamic testing. The power supply shall consist of a power source providing 115-Volt alternating current with a frequency of 60 Hz and a minimum of 2 kilowatts. If field generators are used as the power source, provide functioning meters to monitor power voltage and frequency. Direct current welders or non-constant power sources are unacceptable.

E. Prior to lifting the pile to be dynamically tested, the Trade Contractor shall provide as a minimum 3 foot of clear access to 180 degree opposite faces of the pile for pile preparation. The Trade Contractor or its Consultant shall then drill and prepare holes in the pile for gage attachment.

F. The Trade Contractor or its Consultant shall attach the gages to the pile before driving the piles. Pile driving shall be performed using routine pile installation procedures. When the level of the gages is within 1 foot of the ground surface, or obstruction, driving shall be halted to remove the gages from the pile.

G. With the dynamic testing equipment attached, the Trade Contractor shall drive the pile to the design penetration depth or to a depth determined by the CTDOT Project Manager. The CTDOT Project Manager will use the ultimate pile capacity estimates at the time of driving and/or restriking from dynamic test methods to determine the required pile penetration depth for the ultimate pile capacity. The stresses in the piles will be monitored during driving with the dynamic test equipment to ensure that the actual driving stresses do not exceed the maximum allowed values. If necessary, the Trade Contractor shall reduce the driving energy transmitted to the pile by using additional cushions or reducing the energy output of the

hammer in order to maintain driving stresses below the maximum values. If non-axial driving is indicated by dynamic test equipment measurements, the Trade Contractor shall immediately realign the driving system.

H. After the initial drive of the pile, the Trade Contractor shall wait 3 days, or the time specified in the contract documents, and restrike the dynamic monitoring test pile with the dynamic testing instruments attached. The maximum amount of penetration required during restrike shall be 6 inches, or 50 hammer blows, whichever occurs first.

I. The Trade Contractor's Consultant shall provide preliminary estimates of pile capacity of the test pile to the CTDOT Project Manager within 24 hours of the restrike of each tested pile. The Trade Contractor's Consultant shall also prepare and submit a written report within 5 calendar days of the completion of the testing. This report shall contain a discussion of the pile capacity obtained from the dynamic testing. CAPWAP analyses of the dynamic testing data shall be performed on data obtained at the end of initial driving and the beginning of restrike. The CTDOT Project Manager may request additional analyses at selected pile penetration depths. The report shall also discuss hammer and driving system performance, driving stress levels, and pile integrity. The report is to be prepared, signed, sealed and dated by a Connecticut licensed Professional Engineer. No production piles can be driven until the report has been submitted and approved by the CTDOT Project Manager.

3.3 PILE LOADING TEST

A. Pile loading tests shall conform to the requirements of Subarticle 7.02.03-10, supplemented and amended as follows:

1. Load test piles shall have three 1/2 inch internal diameter Schedule 40 PVC pipe installed within the pile for telltale installation. The pipes shall terminate at the bottom, lower quarter and midpoint of the pile. During load testing, movement of the pile shall be monitored by the telltales.

2. The loading frame shall be capable of loading the pile to 1.5 times the ultimate pile capacity.

3. The general loading procedure will be the Quick Load Test Method as specified in ASTM D-1143. Loads shall be applied in increments of 5% of the ultimate capacity with a constant time interval between increments of three (3) minutes. The pile shall be loaded to 50% of its ultimate capacity, unloaded and then loaded to its ultimate capacity.

4. At the ultimate capacity, creep will be monitored. The ultimate capacity load shall be held for one hour. After creep has been monitored, unload the pile.

5. During unloading cycles, the load decrement shall be such that at least four data points are acquired for the load versus movement curve. Each load decrement shall be held constant for five (5) minutes.

3.4 TEST PILES AND ORDER LISTS:

A. Test pile lengths and locations are identified in the Trade Contract Plans. Dynamic pile tests shall be conducted on each test pile during driving, in accordance with the section Dynamic Pile Driving Analysis (P.D.A.) Test. Pile loading tests shall be conducted on test piles at the

locations shown on the drawings or as directed by the CTDOT Project Manager, in accordance with the section Pile Loading Test.

B. The length of piles to be furnished shall be specified by the CTDOT Project Manager and will be based upon the best information available at the time the order is placed. The lengths shown on the drawings or proposal form are approximate only and may be varied to conform to conditions actually encountered.

C. Before specifying the lengths of piles to be ordered at a given location, the Trade Contractor shall furnish and drive test piles of such lengths as shown on the drawings at the location, complete the dynamic pile driving analysis testing of the test pile(s) at the location, and complete such pile loading tests at the location, as the CTDOT Project Manager deems necessary. The length or lengths of production piles required at a given location will be determined by the CTDOT Project Manager, based upon all available information, including the results obtained in driving the test piles, making the required pile loading tests, and completing the dynamic pile driving analysis testing of the test pile(s) at the location.

D. Test piles shall be of the same type, manufacturer, and cross-sectional dimension as the piles to be installed in the finished structure.

E. The Trade Contractor may request that the order length of piles at certain locations be authorized by the CTDOT Project Manager in advance of test pile installation, dynamic testing, and load testing when the Trade Contractor can demonstrate that advance ordering for that location will result in construction schedule reductions that benefit the State. The decision to authorize advance ordering of piles for locations shall be solely at the discretion of the CTDOT Project Manager.

F. This work by the Contractor shall consist of providing horizontal and vertical monitoring of adjacent structures during pile driving specified herein.

Materials:

The material for this work shall consist of the following:

Monitoring Points: These are to be used as targets in monitoring by conventional survey methods and shall have the following features:

The target shall be the head of a 2 inch long masonry nail with an identification tag. The nail shall be manufactured from hardened, zinc-plated steel. The nail shall have ribbed threads along its shank and a conical point. It shall also have an indent in the center of its head to receive a surveyor's plumb bob.

The identification tag shall be 2.5 inches in diameter by 0.1 inches thick with a punched number for identification. The masonry nail shall be placed through the central hole in the identification tag and driven into a rail tie such that the identification tag lies directly between the surface of rail tie and the head of the masonry nail.

Construction Methods:

All monitoring survey work shall be performed by a Land Surveyor registered in the State of Connecticut.

Monitoring points shall be located at 50 foot intervals along the perimeter of the site adjacent to existing buildings and structures.

The proposed required monitoring point locations shall be shown on a plan provided by the Contractor. The CTDOT PM reserves the right to modify the monitoring point layout.

Pre-pile driving survey: Prior to driving piles within 50 feet of any railroad tracks, perform survey of monitoring points, determining the coordinates and elevations of the monitoring points.

Monitoring during driving: Daily survey coordinates and elevations of all monitoring points within 50 feet of pile driving operations to detect horizontal or vertical movement

Establish the initial coordinates and elevation of each monitoring point to 0.1 inches or less.

The Contractor shall submit the monitoring point survey data to the CTDOT PM within 24 hours of the survey data being obtained. When any reading indicating over 0.25 inches of movement (vertical or horizontal) is noted, the Contractor shall notify the CTDOT PM and discuss possible remedial actions. When any reading indicating over 0.50 inches of movement (vertical or horizontal) is noted, the Contractor shall notify the CTDOT PM and stop pile driving until remedial actions have been implemented.

END OF SECTION 31 62 13.19

SECTION 32 11 23 - AGGREGATE BASE COURSES

PART 1 GENERAL

1.1 SECTION INCLUDES

A. Subbase.

Shall consist of a clean soil-aggregate mixture of bank or crushed gravel, crusher run stone, reclaimed miscellaneous aggregate containing no more than 2% by weight of asphalt cement or any combinations thereof, placed where shown on the plans or where directed by the Engineer and constructed in accordance with these specifications.

B. Processed Aggregate Base.

Shall consist of a foundation constructed on the prepared subbase or subgrade in accordance with these specifications and in conformity with the lines, grades, compacted thickness and typical cross-section as shown on the plans.

1.2 RELATED REQUIREMENTS

A. Section 31 23 16.13 Trenching, for trenching requirements.

B. Section 31 23 16 - Excavation, for excavation requirements

C. Section 31 23 23 - Fill: for fill requirements

D. Section 32 12 16 - Asphalt Paving: asphalt paving requirements courses.

E. Section 33 49 13 – Storm Drainage Manholes, Frames and Covers: Manholes including frames.

1.3 SUBMITTALS

A. See Section 01 33 00 - Submittal Procedures.

B. See Section 01 33 00.13 Document Control.

PART 2 – PRODUCTS

2.1 MATERIALS

A. Subbase: Materials for this work shall conform to the following requirements:

1. Bank or crushed gravel grave, and reclaimed miscellaneous aggregate shall conform to the requirements of Section 31 23 23 Fill, all materials defined as Compacted Granular fill. Crusher Run Stone shall consist of sound, tough, durable broken stone. It shall be

reasonably free from soft, thin, elongated laminated pieces and mud, dirt or other deleterious material.

a. Gradation:

Square Mesh Sieves	Percent Passing by Weight (Mass)
Pass 3 ½ inch sieve	100
Pass 1 1/2 inch sieve	55-95
Pass 1/4 inch sieve:	25-60
Pass No. 10	15-45
Pass No. 40	5-25
Pass No. 100	0-10
Pass No. 200	0-5

b. Plasticity:

1) When the fraction of the dry sample passing the No. 100 (150-µm) mesh sieve is 4% or less by weight (mass), no plastic limit test will be made.

2) When the fraction of the dry sample passing the No. 100 (150-µm) mesh sieve is greater than 4% and not greater than 8% by weight (mass), that fraction shall not have sufficient plasticity to permit the performing of the plastic limit test using AASHTO Method T 90.

3) When the fraction of the dry sample passing the No. 100 (150-µm) mesh sieve is greater than 8% by weight (mass), the sample will be washed; and the additional material passing the No. 100 (150-µm) mesh sieve shall be determined by AASHTO Method T 146, except that the No. 100 (150-µm) mesh sieve will be substituted for the No. 40 (425-µm) mesh sieve where the latter is specified in AASHTO Method T 146. The combined materials that passed the No. 100 (150-µm) mesh sieve shall not have sufficient plasticity to permit the performing of the plastic limit test using AASHTO Method T 90.

Test for resistance to abrasion. gravel materials shall show a loss on abrasion of not more than 50% using AASHTO Method T 96.

2. Crusher-Run Stone shall consist of sound, tough, durable broken stone. It shall be reasonably free from soft, thin, elongated, laminated, friable, micaceous or disintegrated pieces, mud, dirt or other deleterious material.

a. Loss on Abrasion: The crusher-run stone shall show a loss on abrasion of not more than fifty percent using AASHTO Method T 96 Soundness. When Plasticity: When screenings or any combination of screenings and natural sand or any combination of stone sand and natural sand are used, the following requirements shall apply: mesh sieve where the latter is specified in AASHTO Method T 146. The combined materials that have passed the No. 100 (150-µm) mesh sieve shall not have sufficient plasticity to permit the performing of the plastic limit test using AASHTO Method T 90.

3 Reclaimed Miscellaneous Aggregate shall consist of sound, tough, durable particles of crushed reclaimed waste. It shall be free of soft disintegrated pieces, mud, dirt, glass or other injurious material, and contain no more than 2% by weight of asphalt cement.

Soundness: When directed by the Director of Research and Materials bank or crushed gravel shall be subjected to tested s with Magnesium sulfate solution for soundness using

AASHTO T-104 , coarse aggregate shall not have a loss of more than 15% at the end of five (5) cycles.

a. Gradation:

Square Mesh Sieves	Percent Passing by Weight
5 inch sieve	100
3 ½ inch sieve	90-100
1 1/2 inch sieve	55-95
1/4 inch sieve:	25-60
No. 10	15-45
No. 40	5-25
No. 100	0-10
No. 200	0-5

b. Plasticity:

1) When the fraction of the dry sample passing the No. 100 (150-µm) mesh sieve is 4% or less by weight (mass), no plastic limit test will be made.

2) When the fraction of the dry sample passing the No. 100 (150-µm) mesh sieve is greater than 4% and not greater than 8% by weight (mass), that fraction shall not have sufficient plasticity to permit the performing of the plastic limit test using AASHTO Method T 90.

3) When the fraction of the dry sample passing the No. 100 (150-µm) mesh sieve is greater than 8% by weight (mass), the sample will be washed; and the additional material passing the No. 100 (150-µm) mesh sieve shall be determined by AASHTO Method T 146, except that the No. 100 (150-µm) mesh sieve will be substituted for the No. 40 (425-µm) mesh sieve where the latter is specified in AASHTO Method T 146. The combined materials that passed the No. 100 (150-µm) mesh sieve shall not have sufficient plasticity to permit the performing of the plastic limit test using AASHTO Method T 90.

Test for Resistance to Abrasion. Gravel materials shall show a loss on abrasion of not more than 50% using AASHTO Method T 96.

B. Processed Aggregate Base and Pavement: The materials for this work shall conform to the following requirements

1. Gradation: Coarse and fine aggregates shall be combined and mixed by approved methods so that the resulting material shall conform to the following gradation requirements:

Square Mesh Sieves	Percent Passing by Weight (Mass)
Pass 2 1/2	100
Pass 2 inch	95 to 100
Pass 3/4 inch	50 to 75
Pass 1/4 inch	25 to 45
Pass # 40	5 to 20
Pass # 100	2 to 12

2. Coarse Aggregate: Coarse aggregate shall be either gravel, broken stone or reclaimed miscellaneous aggregate containing no more than 2% by weight (mass) of asphalt cement, at the option of the Trade Contractor. When tested by means of the Los Angeles Machine, using AASHTO Method T 96, the coarse aggregate shall not have a loss of more than 50%.

    a. If gravel is used for the coarse aggregate, it shall consist of sound, tough, durable particles of crushed or uncrushed gravel or a mixture thereof, free from soft, thin, elongated or laminated pieces, lumps of clay, loam and vegetable or other deleterious substances.

    b. If broken stone is used for the coarse aggregate, it shall consist of sound, tough, durable fragments of rock of uniform quality throughout. It shall be free from soft disintegrated pieces, mud, dirt, organic or other injurious material.

    c. If the reclaimed miscellaneous aggregate is used for the coarse aggregate, it shall consist of sound, tough, durable fragments of uniform quality throughout. It shall be free from soft disintegrated pieces, mud, dirt, glass, organic or other injurious material.

    d. Soundness for Gravel, Broken Stone and Reclaimed Miscellaneous Aggregate: When tested by magnesium sulfate solution for soundness using AASHTO Method T 104, the coarse aggregate shall show a loss of not more than 15% at the end of 5 cycles.

3. Fine Aggregate: The fine aggregate shall be natural sand, stone sand, screenings or any combination thereof. The fine aggregate shall be limited to material 95% of which passes a No. 4 (4.75-mm) sieve having square openings and not more than 8% of which passes a No. 200 (75-µm) sieve. The material shall be free from clay, loam and deleterious materials.

    a. Plasticity: When natural sand is used, the fine aggregate shall conform to the requirements of Sub-Article 2.1.A.1.b of this specification.

        1) When the fraction of the dry sample passing the No. 100 mesh sieve is 6% or less by weight (mass), no plastic limit test will be made.

        2) When the fraction of the dry sample passing the No. 100 mesh sieve is greater than 6% and not greater than 10% by mass, that fraction shall not have sufficient plasticity to permit the performing of the plastic limit test, using AASHTO Method T 90.

        3) When the fraction of the dry sample passing the No. 100 mesh sieve is greater than 10% by weight (mass), the sample shall be washed; and additional material passing the No. 100 mesh sieve shall be determined by AASHTO Method T 146, except that the No. 100 (150-µm) mesh sieve shall be substituted for the No. 40 100 mesh sieve shall not have sufficient plasticity to permit the performing of the plastic limit test using AASHTO Method T 90.

2.2 SOURCE QUALITY CONTROL

A. See Section 01 45 00 - Quality Control for this specification, for testing and analysis of aggregate materials.

PART 3 – EXECUTION

3.1 EXAMINATION

A. Verify that survey bench marks and intended elevations for the work are as indicated.

B. Verify substrate has been inspected, gradients and elevations are correct, and is dry.

3.2 PREPARATION

A. Correct irregularities in substrate gradient and elevation by scarifying, reshaping, and re-compacting.

B. Do not place aggregate on soft, muddy, or frozen surfaces.

3.3 CONSTRUCTION METHODS

A. Subbase: The prepared foundation for the subbase shall be carefully shaped to the required cross-section and compacted as specified in Section 31 23 16.. Where underdrains and outlets are specified on the plans or ordered by the Engineer, they shall be in place and functioning before any subbase material is placed.

The subbase material shall be spread uniformly upon the required grade, in courses not to exceed 6 inches in thickness after final compaction. However, if the required thickness of subbase does not exceed 8 inches, it may be placed in one course.

After each course has been placed as specified above, its entire area shall be compacted with equipment specifically manufactured for that purpose. The sole use of hauling and spreading equipment shall not be considered as a substitute for compacting equipment. Compaction shall be continued until the entire course is uniformly compacted to the required minimum density. The dry density after compaction shall not be less than 95% of the dry density for that subbase material when tested in accordance with AASHTO T-180, Method D. If a subbase course is formed from reclaimed miscellaneous aggregate containing bituminous concrete, the wet density after compaction on this course shall not be less than 95% of the wet density for that subbase when tested in accordance with AASHTO T180, Method D.

Each layer of subbase shall be compacted at optimum moisture content. No subsequent layer shall be placed until the specified compaction is obtained for the previous layer.

Should the foundation material beneath the subbase become churned up and mixed with subbase material at any time, the Trade Contractor shall be wholly responsible to remove the mixture and replace it with new subbase material to the required thickness shown on the plans or as previously required by the Engineer. Such replaced subbase material shall be compacted to the required minimum density.

B. Processed Aggregate Base: Only one type of coarse aggregate shall be used on a project unless otherwise permitted by the Engineer. Prior to placing the processed aggregate base, the prepared subbase or subgrade shall be maintained true to line and grade, for a minimum

distance of 200 feet in advance of the work. None of the aggregate courses shall be placed more than 500 feet ahead of the compaction and binding operation on that particular course.

The processed aggregate base shall be spread uniformly by a method approved by the Engineer. The thickness of each course shall not be more than 4 inches after compaction, unless otherwise ordered.

After the aggregate is spread, it shall be thoroughly compacted and bound by use of equipment specifically manufactured for that purpose. Rollers shall deliver a ground pressure of not less than 300 pounds per lineal inch of contact width and shall have a weight not less than 10 tons. Vibratory units shall have a static weight of not less than 4 tons. Water may be used during the compaction and binding operation and shall be applied from an approved watering device. The compacting and binding operation shall begin at the outside edges, overlapping the shoulders for a distance of not less than 6 inches and progress towards the middle, parallel with the centerline of the pavement. The work shall cover the entire surface of the course with uniform overlapping of each preceding track or pass. Areas of super-elevation and special cross slope shall be compacted by beginning at the lowest edge and proceeding towards the higher edge, unless otherwise directed by the Engineer. The compacting and binding operation shall be continued until the voids in the aggregates have been reduced to provide a firm and uniform surface satisfactory to the Engineer. The amount of compactive effort shall in no case shall be less than four (4) complete passes of the compacting and binding operations. All aggregate shall be completely compacted and bound at the end of each day's work or when traffic is to be permitted to operate on the road. The dry density of each layer of processed aggregate base after compaction shall not be less than 95 percent of the dry density for that material when tested in accordance with AASHTO T180, Method D.

Should the subbase or subgrade material become churned up or mixed with the processed aggregate base at any time, the Trade Contractor shall, without additional compensation remove the mixture. The Trade Contractor shall add new subbase material, if required, and reshape and recompact the subbase in accordance with the subbase requirements of this specification. New aggregate material shall be added, compacted and bound, as hereinbefore specified, to match the surrounding surface.

Any surface irregularities which develop during, or after work on each course, shall be corrected by loosening material already in place and removing or adding aggregate as required. The entire area, including the surrounding surface, shall be re-compacted and rebound until it is brought to a firm and uniform surface satisfactory to the Engineer.

END OF SECTION 32 11 23

SECTION 32 12 16 - ASPHALT PAVING

PART 1 GENERAL

1.1 SECTION INCLUDES

A. Description: Work under this section shall include the production, delivery and placement of a non-segregated, smooth and dense bituminous concrete mixture brought to proper grade and cross section. This section shall also include the method and construction of longitudinal joints. The Trade Contractor shall furnish ConnDOT with a Quality Control Plan as described in Sub-article 1.4 Quality Assurance

1.2 RELATED REQUIREMENTS

A. Section 01 33 00 Submittal Procedures and Section 01 33 00.13 – Document Control.

B. Section 32 11 23 - Aggregate Base Courses. Section 31 22 16.33 Roadway Subgrade Formation

1.3 DEFINITIONS

A. Bituminous Concrete: A concrete material that uses a bituminous material (typically asphalt) as the binding agent and stone and sand as the principal aggregate components. Bituminous concrete may also contain any of a number of additives engineered to modify specific properties and/or behavior of the concrete material. For the purposes of this Specification, references to bituminous concrete apply to all of its sub-categories, for instance those defined on the basis of production and placement temperatures, such as hot-mix asphalt (HMA) or warm-mix asphalt (WMA), those categories derived from the mix-design procedure used, such as “Marshall” mixes or “Superpave” mixes, or those defined on the basis of composition, such as polymer-modified asphalt (PMA).

B. Course: A lift or multiple lifts comprised of the same bituminous concrete mixture placed as part of the pavement structure.

C. Density Lot: All material placed in a single lift and as defined in Sub-article 1.4 Quality Assurance.

D. Disintegration: Wearing away or fragmentation of the pavement. Disintegration will be evident in the following forms: Polishing, weathering-oxidizing, scaling, spalling, raveling, potholes or loss of material.

E. Dispute Resolution: A procedure used to resolve conflicts resulting from discrepancies between the Engineer and the Trade Contractor’s density results.

F. Hot Mix Asphalt (HMA): A bituminous concrete mixture typically produced at 325°F.

G. Lift: An application of a bituminous concrete mixture placed and compacted to a specified thickness in a single paver pass.

H. Marshall: A bituminous concrete mix design used in mixtures designated as "Bituminous Concrete Class ( )".

I. Polymer Modified Asphalt (PMA): A bituminous concrete mixture containing a polymer modified asphalt binder in accordance with trade contract specifications.

J. Production Lot: All material placed during a continuous daily paving operation.

K. Quality Assurance (QA): All those planned and systematic actions necessary to provide confidence that a product or facility will perform as designed.

L. Quality Control (QC): The sum total of activities performed by the vendor (Producer, Manufacturer, and Trade Contractor) to ensure that a product meets trade contract specification requirements.

M. Superpave: A bituminous concrete mix design used in mixtures designated as "S*" Where "S" indicates Superpave and * indicates the sieve related to the nominal maximum aggregate size of the mix.

N. Segregation: A non-uniform distribution of a bituminous concrete mixture in terms of volumetrics, gradation or temperature.

O. Warm Mix Asphalt (WMA): A bituminous concrete mixture that can be produced and placed at reduced temperatures than HMA using a qualified additive or technology.

1.4 QUALITY ASSURANCE

A. Trade Contractor Quality Control (QC) Requirements for Placement: The Trade Contractor shall be responsible for maintaining adequate quality control procedures throughout the placement operations. Therefore, the Trade Contractor must ensure that the materials, mixture and work provided by Sub-trade contractors, Suppliers and Producers also meet trade contract specification requirements.

Quality Control Plan: Prior to placement the Trade Contractor shall submit a QCP to the Engineer for approval. The QCP shall be submitted at the pre-construction meeting or a minimum 30 days prior to any production or paving. The QCP shall be in the format provided by the Engineer.
(http://www.ct.gov/dot/lib/dot/documents/dconstruction/pat/qcp_outline_hma_placement.pdf).
Work covered by the QCP shall not commence until the Engineer's comments have been incorporated into the QCP and approved. The QCP shall detail every aspect of the placement process and if required, include a separate section on Extended Season paving as described in Section 4, "Seasonal Requirements". Information provided shall include the organization and procedures which the Trade Contractor shall use to control all project site activity. The QCP must address the actions, inspection, or sampling and testing necessary to keep the production and placement operations in control, to determine when an operation has gone out of control and to respond to correct the situation in a timely fashion. The QCP shall also include details on when and who will communicate with personnel at the bituminous concrete plant to determine when immediate changes to the production or placement processes are needed, and to implement the required changes.

In addition the QCP shall also include the name and qualifications of a Quality Control Manager (QCM). The QCM shall be responsible for the administration of the QCP, and any

modifications that may become necessary. The QCM shall have the ability to direct all Trade Contractor personnel on the project during paving operations. All Trade Contractor sampling, inspection and test reports shall be reviewed and signed by the QCM prior to submittal to the Engineer.

Approval of the QCP will be based on the inclusion of all of the required information. Approval of the QCP does not relieve the Trade Contractor of its responsibility to comply with the project specifications. The Trade Contractor may modify the QCP as work progresses and must document the changes in writing prior to commencing the next paving operation. These changes include but are not limited to changes in quality control procedures or personnel. Placement may be suspended by the Engineer until the revisions to the QCP have been put into effect.

The Quality Control Plan shall also include the name and qualifications of any outside testing laboratory performing any QC functions on behalf of the Trade Contractor.

Quality Control Inspection, Sampling and Testing: The Trade Contractor shall perform all quality control sampling and testing, provide inspection, and exercise management control to ensure that bituminous concrete production and placement conforms to the requirements as outlined in its QCP during all phases of the work.

1. Control Charts: The Trade Contractor shall develop and maintain density control charts and shall submit them to the Engineer. The control charts shall include the project number, test numbers, test parameter, applicable upper and lower specification limits, and test data. The control charts shall be used as part of the quality control system to document the placement process. The control chart(s) shall be updated each day of production, and e a copy shall be submitted prior to the next day's production.

2. Records of Inspection and Testing: For each day of placement, the Trade Contractor shall document all test results and inspections on forms approved by the Engineer. The document shall be certified by the Quality Control Manager or his representative that the information in the document is accurate, and that all work complies with the requirements of the trade contract.

   The Trade Contractor shall submit complete and accurate density sampling, testing and inspection documents to the Engineer within 48 hours. The documents shall be submitted in a manner acceptable to the Engineer.

   The Trade Contractor may obtain one (1) mat core and one (1) joint core per day for process control, provided this process is detailed in the QCP. The results of these process control cores shall not be used to dispute the Department determinations from the acceptance cores. The Trade Contractor shall submit the location of each process control core to the Engineer for approval prior to taking the core. Additional cores may be obtained to correlate a density gauge used by the trade contractor for quality control as approved by the Engineer. The core holes shall be filled to the same requirements described in Sub article 1.4.B.

B. Density Testing of Bituminous Concrete Utilizing Core Samples: This procedure describes the frequency and the method the Trade Contractor shall use to obtain pavement cores for acceptance from the project. Coring shall be performed on each lift specified to a thickness of one and one-half (1 ½) inches or more. Each lift including the longitudinal joints shall be compacted to the degree specified in Tables 4.06-9 and 4.06-10. The density of each core shall

be determined using the production lot's average maximum theoretical gravity established from the plant production testing. Bituminous concrete Class 4 and HMA S1 are excluded from the longitudinal joint density requirements.

The Trade Contractor shall extract cores (4 or 6 inch diameter for S0.25, S0.375 and S0.5 mixes, 6 inch diameter for S1.0 mixtures -wet sawed) from sampling locations determined by the Engineer. The Engineer must witness the extraction and labeling of cores, as well as the filling of the core holes. The cores shall be labeled by the Trade Contractor with the project number, lot number, and sub-lot number on the top surface of the core. When labeling the core lot number, include whether the core is from a mat lot or joint lot by using an "M" for a mat core and "J" for a joint core. For example, a core from the first sub-lot of the first mat lot shall be labeled with "Lot M1 – 1". The first number refers to the lot and the second number refers to the sub-lot. Refer to Figure 4.06-4. The side of the cores shall be labeled with the core lot number and date placed. The project inspector shall fill out a MAT-109 containing the same information to accompany the cores. The Trade Contractor shall deliver the cores and MAT-109 to the Department's Central Testing Lab in a safe manner to ensure no damage occurs to the cores. The Trade Contractor shall use a container approved by the Engineer. In general the container shall consist of an attached lid container made out of plastic capable of being locked shut and tamper proof. The Trade Contractor shall use foam, bubble wrap, or another suitable material to prevent the cores from being damaged during transportation. Once the cores and MAT-109 are in the container the Engineer will secure the lid using a security seal. The security seal's identification number must be documented on the MAT-109. The Central Lab will break the security seal and take possession of the cores upon receipt.

Figure 4.06-4

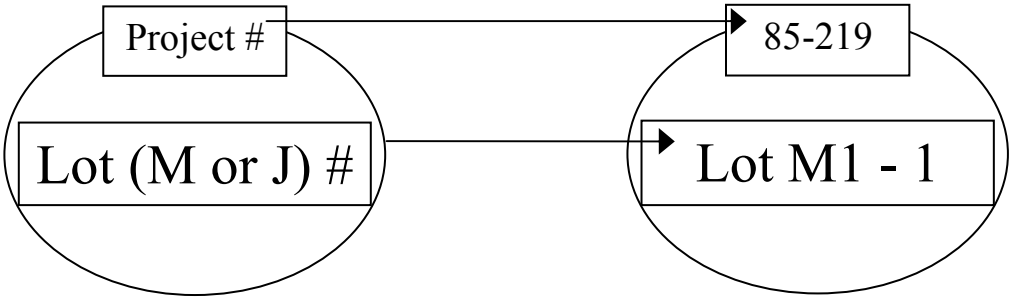

Frequency of sampling is in accordance with the following tables:

TABLE 4.06-4 - TESTING REQUIREMENT FOR BRIDGE DENSITY LOT

Length of Each Structure (Feet)	**MAT – No. of Cores**	**JOINT - No. of cores**
≤ 500'	See Table 4.06-5(A or B)	See Table 4.06-5(A or B)
501' – 1500'	3	3
1501' – 2500'	4	4
2501' and greater	5	5

All material placed on structures less than or equal to 500 feet in length shall be included as part of a standard lot as follows:

TABLE 4.06-5A – TESTING REQUIREMENT FOR DENSITY LOTS ≥ 500 TONS

Lot Type	No. of Mat Cores		No. of Joint Cores		Target Lot Size (Tons)
Lot Without Bridge(1)	4		4		2000
Lot With Bridge(s)(1)(2)	4 plus	1 per structure (≤ 300')	4 plus	1 per structure (≤ 300')	2000
		2 per structure (301' – 500')		2 per structure (301' – 500')	

TABLE 4.06-5B – TESTING REQUIREMENT FOR DENSITY LOTS < 500 TONS

Lot Type	No. of Mat Cores	No. of Joint Cores	Lot Size (Tons)
Lot Without Bridge(1)	3	3	1 per lift
Lot With Bridge(s)(1)(2)	3	3	1 per lift

Note (1): The number of "Required Paver Passes for Full Width" shall be used to determine the sub-lot sizes within the lot. The number of paver passes for full width is determined by the trade contractor.

Note (2): If a non-bridge mat or joint core location randomly falls on a structure, the core is to be obtained on the structure in addition to the core(s) required on the structure.
A density lot will be complete when the full designed paving width of the established lot length has been completed and shall include all longitudinal joints that exist between the curb lines regardless of date(s) paved. Quantity of material placed on structures less than or equal to 500 feet long is inclusive of the standard lot. Prior to paving, the total length of the project to be paved shall be split up into lots that contain approximately 2000 tons each. Areas such as highway ramps may be combined to create one lot. In general, combined areas should be set up to target a 2000 ton lot size.

After the compaction process has been completed, the material shall be allowed to cool sufficiently to allow the cutting and removal of the core without damage. The Trade Contractor shall core to a depth that allows extraction so that the uppermost layer being tested for density will not be affected.

A mat core shall not be taken any closer than one foot from the edge of a paver pass. If a random number locates a core less than one foot from any edge, locate the core so that the sample is one foot from the edge.

Joint cores must be taken so that the center of the core is 5 inches from the visible joint on the hot mat side. Refer to figure 4.06-5.

Figure 4.06-5

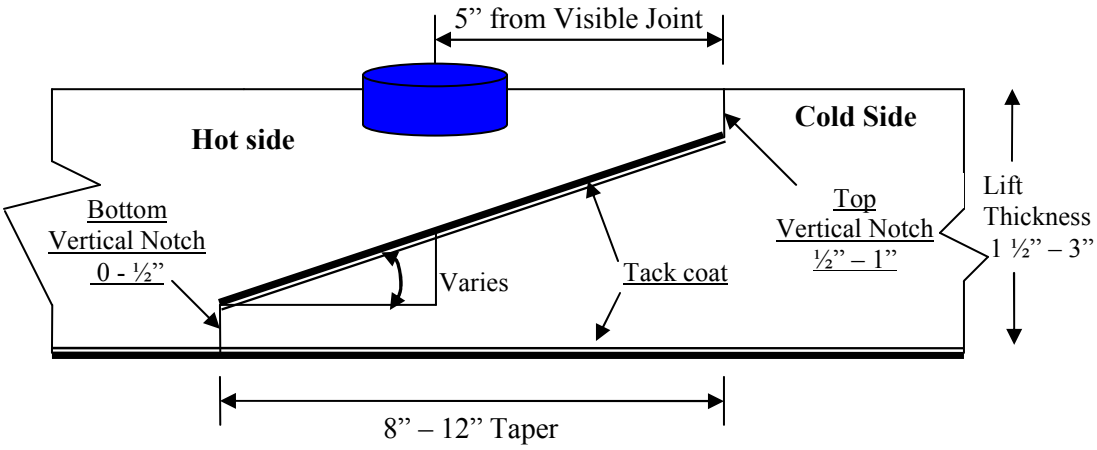

Cores may be obtained daily or weekly. All cores must be cut within 5 calendar days of placement. Any core that is damaged or obviously defective while being obtained will be replaced with a new core from a location within 2 feet measured in a longitudinal direction.

Core holes shall be filled immediately upon core extraction. Prior to being filled, the hole shall be prepared by removing any free water and applying tack coat using a brush or other means to uniformly cover the cut surface. The core hole shall be filled with a mixture containing the same nominal maximum aggregate size and compacted with a hand compactor or other mechanical means to the maximum compaction possible. The bituminous concrete mixture shall be compacted to ⅛ inch above the finished pavement prior to opening the roadway to traffic.

C. Acceptance Inspection, Sampling and Testing: Inspection, sampling, and testing to be used by the Engineer shall be performed at the minimum frequency specified in Part 2 – Products of this specification

Sampling for acceptance shall be established using ASTM D 3665, or a statistically based procedure of random sampling approved by the Engineer.

Plant Material Acceptance: The Trade Contractor shall provide the required acceptance sampling, testing and inspection during all phases of the work in accordance with Part 2 – Products. The Department will perform verification testing on the Trade Contractor's acceptance test results. Should binder content or air void results exceed the specified tolerances in the Department's current QA Program for Materials, Acceptance and Assurance Testing Policies and Procedures, the Department will investigate to determine an assignable cause. Trade Contractor's test results for a subject lot or sub lot may be replaced with verification's result for the purpose of assessing adjustments. The verification procedure is included in the Department's current QA Program for Materials.

Density Acceptance: The Engineer will perform all acceptance testing on the cores in accordance with AASHTO T 331(M).

D. Density Dispute Resolution Process: The Trade Contractor and Engineer will work in partnership to avoid potential conflicts and to resolve any differences that may arise during quality control or acceptance testing for density. Both parties will review their sampling and testing procedures and results and share their findings. If the Trade Contractor disputes the

Engineer's test results, the Trade Contractor must submit in writing a request to initiate the Dispute Resolution Process within 10 calendar days of the notification of the test results. No request for dispute resolution will be allowed unless the Trade Contractor provides quality control results within the timeframe described in Sub article 1.4 supporting its position. Should the dispute not be resolved through evaluation of existing testing data or procedures, the Engineer may authorize the Trade Contractor to obtain a new set of core samples per disputed lot. The core samples must be extracted no later than 30 calendar days from the date of Engineer's authorization. The number and type (mat, joint, or structure) of the cores taken for dispute resolution must reflect the number and type of the cores taken for acceptance. The location of each core shall be 36-inches from the original acceptance core location forward along a line parallel to the baseline that results in the same type (mat, joint, or structure) of core. All such core samples shall be extracted and filled using the procedure outlined in Sub-article 1.4.B. The results from the dispute resolution cores shall be added to the results from the acceptance cores and averaged for determining the final in-place density value.

PART 2 PRODUCTS

2.1 MATERIALS

A. Bituminous Concrete Materials and Facilities: Each source of material, and facility or plant used to produce and test bituminous concrete must be qualified on an annual basis by the Engineer. Test Procedures and Specifications referenced herein are in accordance with the latest AASHTO and ASTM Standard Test Procedures and Specifications. Such references when noted with an (M) have been modified by the Engineer and are detailed in Table M.04.03-6.

The Trade Contractor shall submit to the Engineer all sources of coarse aggregate, fine aggregate, mineral filler, PG binder, and if applicable any additives such as but not limited to anti-strip, warm mix, and polymer modifiers. The Trade Contractor shall submit a Material Safety Data Sheet (MSDS) for each grade of binder, and additive to be used on the Project. The Trade or shall not change any material sources without prior approval of the Engineer.

An adequate quantity of each size aggregate, mineral filler, bitumen, and additives, shall be maintained at the bituminous concrete plant site at all times while the plant is in operation to ensure that the plant can consistently produce bituminous concrete mixtures that meet the job mix formula (JMF) as specified in Sub-article 2.1.B.. The quantity of such material shall be reviewed by the Engineer on an individual plant basis and is dependent upon the plant's daily production capacity. A total quantity of any material on site that amounts to less than one day's production capacity may be cause for the job mix formula to be rejected.

1. Coarse Aggregate:

a. Requirements: The coarse aggregate shall consist of clean, hard, tough, durable fragments of crushed stone or crushed gravel of uniform quality. Aggregates from multiple sources of supply must not be mixed or stored in the same stockpile.

b. Basis of Approval: The request for approval of the source of supply shall include a washed sieve analysis in accordance with AASHTO T 27. The Gsa, Gsb, and Pw_a shall be determined in accordance with AASHTO T 85. The coarse aggregate must not contain more than 1% crusher dust, sand, soft disintegrated pieces, mud, dirt, organic and other injurious materials. When tested for abrasion using AASHTO T 96, the aggregate loss must not exceed 40%. When tested for soundness using

AASHTO T 104 with a magnesium sulfate solution, the coarse aggregate must not have a loss exceeding 10% at the end of 5 cycles.

For all bituminous mixtures, materials shall also meet the coarse aggregate angularity criteria as specified in Tables M.04.02-2 thru M.04.02-4 for blended aggregates retained on the #4 sieve when tested according to ASTM D 5821. The amount of aggregate particles of the coarse aggregate blend retained on the #4 sieve that are flat or elongated shall be determined in accordance with ASTM D 4791 and shall not exceed 10% by weight when tested to a 3:1 ratio, as shown in Tables M.04.02-2 thru M.04.02-4.

2. Fine Aggregate:

Requirements: The fine aggregate from each source quarry/pit deposit shall consist of clean, hard, tough, rough-surfaced and angular grains of natural sand; manufactured sand prepared from washed stone screenings; stone screenings, slag or gravel; or combinations thereof, after mechanical screening or manufactured by a process approved by the Engineer. The Trade Contractor is prohibited from mixing two or more sources of fine aggregate on the ground for the purpose of feeding into a plant.

a. All fine aggregate shall meet the listed criteria shown in items #1 thru #7 of Table M.04.01-1. Table M.04.01-1 indicates the quality tests and criteria required for all fine aggregate sources. Individually approved sources of supply shall not be mixed or stored in the same stockpile. The fine aggregates must be free from injurious amounts of clay, loam, and other deleterious materials.

For Superpave mixtures, in addition to the above requirements, the fine aggregate angularity shall be determined by testing the materials passing the #8 sieve in accordance with AASHTO T 304, Method A. Qualification shall be based on the criteria listed in Tables M.04.02-2 thru M.04.02-4. The fine aggregate shall also be tested for clay content as a percentage contained in materials finer than the #8 sieve in accordance with AASHTO T 176.

Table M.04.01-1: Fine Aggregate Criteria by Pit/Quarry Source

Item	Title	AASHTO Protocol(s)	Criteria
1	Grading	T 27 & T 11	100% Passing 3/8 inch 95% Passing the #4 min.
2	Absorption	T 84	3% maximum
3	Plasticity limits	T 90	0 or not detectable
4	L.A. Wear	T 96	50% maximum(fine agg. particle size # 8 and above)
5	Soundness by Magnesium Sulfate	T 104	20% maximum @ 5 cycles
6	Clay Lumps and Friable Particles	T 112	3% maximum
7	Deleterious Material	As determined by the Engineer	Organic or inorganic calcite, hematite, shale, clay or clay lumps, friable materials, coal-lignite, shells, loam, mica, clinkers, or organic matter (wood, etc). -Shall not contain more than 3% by mass of any individual listed constituent and not more than 5% by mass in total of all listed constituents.
8	Petrographic Analysis	ASTM C 295	Terms defined in Sub-article 2.1.2.c, below

b. Basis of Approval: A Quality Control Plan for Fine Aggregate (QCPFA) provided by the Trade Contractor shall be submitted for review and approval for each new source documenting how conformance to Items 1 through 7 as shown in Table M.04.01-1 is monitored. The QCPFA must be resubmitted any time the process, location or manner of how the fine aggregate (FA) is manufactured changes, or as requested by the Engineer. The QCPFA must include the locations and manufacturing processing methods. The QCPFA for any source may be suspended by the Engineer due to the production of inconsistent mixtures.

The Trade Contractor shall submit all test results to the Engineer for review. The Trade Contractor shall also include a washed sieve analysis in accordance with AASHTO T 27/T 11. Any fine aggregate component or final combined product shall have 100% passing the 3/8 inch sieve and a minimum of 95% passing the # 4. The Gsa, Gsb, and Pw_a shall be determined in accordance with AASHTO T 84.

The Trade Contractor will be notified by the Engineer if any qualified source of supply fails any portion of Table M.04.01-1. One retest will be allowed for the Trade Contractor to make corrections and/or changes to the process. If, upon retest, the material does not meet the requirements of items 1-7, additional testing will be required in accordance with item 8.

c. The Trade Contractor may provide a Petrographic analysis of the material performed by a third party acceptable to the Engineer at its' own expense. The Trade Contractor shall submit the results of the analysis with recommended changes to the manufacturing process to the Engineer. The Trade Contractor shall submit fine aggregate samples for testing by the Engineer after the recommended changes have been made.

The Trade Contractor may request the use of such fine aggregate on select project(s) for certain applications of bituminous concrete pavement. Such material will be monitored for a period no less than 48 months, at no cost to the State. Terms of any evaluation and suitable application will be determined by the Engineer.

3. Mineral Filler:

a. Requirements: Mineral filler shall consist of finely divided mineral matter such as rock dust, including limestone dust, slag dust, hydrated lime, hydraulic cement, or other accepted mineral matter. At the time of use it shall be freely flowing and devoid of agglomerations. Mineral filler shall be introduced and controlled at all times during production in a manner acceptable to the Engineer.

b. Basis of Approval: The request for approval of the source of supply shall include the location, manufacturing process, handling and storage methods for the material. Mineral filler shall conform to the requirements of AASHTO M-17

4. Liquid Bituminous Materials:

a. General:

i Liquid PG binders shall be uniformly mixed and blended and be free of contaminants such as fuel oils and other solvents. Binders shall be properly heated and stored to prevent damage or separation.

ii. The blending at mixing plants of PG binder from different suppliers is strictly prohibited. Trade Contractors who blend PG binders will be classified as a supplier and will be required to certify the binder in accordance with AASHTO R-26(M). The binder shall meet the

requirements of AASHTO M-320(M) and AASHTO R-29(M). The Trade Contractor shall submit a Certified Test Report and bill of lading representing each delivery in accordance with AASHTO R-26(M). The Certified Test Report must also indicate the binder specific gravity at 77ºF; rotational viscosity at 275ºF and 329ºF and the mixing and compaction viscosity-temperature chart for each shipment.

iii. The Trade Contractor shall submit the name(s) of personnel responsible for receipt, inspection, and record keeping of PG binder materials. Trade Contractor plant personnel shall document specific storage tank(s) where binder will be transferred and stored until used, and provide binder samples to the Engineer upon request. The person(s) shall assure that each shipment (tanker truck) is accompanied by a statement certifying that the transport vehicle was inspected before loading and was found acceptable for the material shipped and that the binder will be free of contamination from any residual material, along with two (2) copies of the bill of lading.

iv. Basis of Approval: The request for approval of the source of supply shall list the location where the material will be manufactured, and the handling and storage methods, along with necessary certification in accordance with AASHTO R-26(M). Only suppliers/refineries that have an approved "Quality Control Plan for Performance Graded Binders" formatted in accordance with AASHTO R-26(M) will be allowed to supply PG binders to Department projects.

b. Neat Performance Grade (PG) Binder:

i. PG binder shall be classified by the supplier as a "Neat" binder for each lot and be so labeled on each bill of lading. Neat PG binders shall be free from modification with: fillers, extenders, reinforcing agents, adhesion promoters, thermoplastic polymers, acid modification and other additives, and shall indicate such information on each bill of lading and certified test report.

ii. The asphalt binder shall be Performance Grade PG 64-22.

c. Modified Performance Grade (PG) Binder

Unless otherwise noted, the asphalt binder shall be Performance Grade PG 76-22 asphalt modified with a Styrene-Butadiene-Styrene (SBS) polymer. The polymer modifier shall be added at either the refinery or terminal and delivered to the bituminous concrete production facility as homogenous blend. The stability of the modified binder shall be verified in accordance with ASTM D7173 using the Dynamic Shear Rheometer (DSR). The DSR $G^*/\sin(\delta)$ results from the top and bottom sections of the ASTM D7173 test shall not differ by more than 10%. The results of ASTM D7173 shall be included on the Certified Test Report. The binder shall meet the requirements of AASHTO M-320(M) and AASHTO R-29(M).

d. Warm Mix Additive or Technology:

i. The warm mix additive or technology must be listed on the NEAUPG Qualified Warm Mix Asphalt (WMA) Technologies List at the time of bid, which may be accessed online at http://www.neaupg.uconn.edu/wma_info.html.

ii. The warm mix additive shall be blended with the asphalt binder in accordance with the manufacturer's recommendations.

iii. The blended binder shall meet the requirements of AASHTO M-320(M) and AASHTO R-29(M) for the specified binder grade. The Trade Contractor shall submit a Certified Test Report showing the results of the testing demonstrating the binder grade. In addition, it must include the grade of the virgin binder, the brand name of the warm mix additive, the manufacturer's suggested rate for the WMA additive, the water injection rate (when applicable) and the WMA Technology manufacturer's recommended mixing and compaction temperature ranges.

iv. Cut-backs (medium cure type);

i. Requirements: The liquid petroleum materials shall be produced by fluxing an asphalt base with appropriate petroleum distillates to produce the grade specified.

ii. Basis of Approval: The request for approval of the source of supply shall be submitted at least seven days prior to its use listing the location where the materials will be produced, and manufacturing, processing, handling and storage methods. The Trade Contractor shall submit a Certified Test Report in accordance with Section 01 33 00 Submittal Procedures and a Material Safety Data Sheet (MSDS) for the grade to be used on the Project. The liquid asphalt shall be MC-250 conforming to AASHTO M-82.

e. Emulsions

i. Requirements: The emulsified asphalt shall be homogeneous and not be used if exposed to freezing temperatures.

ii. Basis of Approval**:** The request for approval of the source of supply must include the location where the materials will be produced, and manufacturing, processing, handling and storage methods.

1. Emulsified asphalts shall conform to the requirements of AASHTO M-140. Materials used for tack coat shall not be diluted and meet grade RS-1. When ambient temperatures are 80˚F and rising, grade SS-1 or SS-lh may be substituted if accepted by the Engineer. Each shipment shall be accompanied with a Certified Test Report listing Saybolt viscosity, residue by evaporation, penetration of residue, and weight per gallon.

2. Cationic emulsified asphalt shall conform to the requirements of AASHTO M-208(M). Materials used for tack coat shall not be diluted and meet grade CRS-1. The settlement and demulsibility test will not be performed unless deemed necessary by the Engineer. When ambient temperatures are 80˚F and rising, grade CSS-1 or CSS-lh may be substituted if accepted by the Engineer. Each shipment shall be accompanied with a Certified Test Report listing Saybolt viscosity, residue by evaporation, penetration of residue, and weight per gallon.

5. Reclaimed Asphalt Pavement (RAP):

a. Requirements: RAP shall consist of asphalt pavement constructed with asphalt and aggregate reclaimed by cold milling or other removal techniques approved by the Engineer. For bituminous concrete mixtures containing RAP, the Trade Contractor shall submit a JMF in accordance with Sub-article 2.1.B to the Engineer for review.

b. Basis of Approval: The RAP material will be accepted on the basis of one of the following criteria:

i. When the source of all RAP material is from pavements previously constructed on Department projects, the Trade Contractor shall provide a materials certificate listing the detailed locations and lengths of those pavements and that the RAP is only from those locations listed.

ii. When the RAP material source or quality is not known, the Trade Contractor shall test the material and provide the following information along with a request for approval to the Engineer at least 30 calendar days prior to the start of the paving operation. The request shall include a material certificate stating that the RAP consists of aggregates that meet the specification requirements of Sub articles 2.1.A. through 2.1.A.3 and that the binder in the RAP is substantially free of solvents, tars and other contaminants. The Trade Contractor is prohibited from using unapproved material on Department projects and shall take necessary action to prevent contamination of approved RAP stockpiles. Stockpiles of unapproved material shall remain separate from all other RAP materials at all times. The request for approval shall include the following:

1. A 50-pound sample of the RAP to be incorporated into the recycled mixture.
2. A 25-pound sample of the extracted aggregate from the RAP.
3. A statement that RAP material has been crushed to 100% passing the ½ inch sieve and remains free from contaminants such as joint compound, wood, plastic, and metals.

6. Crushed Recycled Container Glass (CRCG):

a. Requirements: The Trade Contractor may propose to use clean and environmentally-acceptable CRCG in an amount not greater than 5% by weight of total aggregate.

b. Basis of Approval: The Trade Contractor shall submit to the Engineer a request to use CRCG. The request shall state that the CRCG contains no more than 1% by weight of contaminants such as paper, plastic and metal and conform to the following gradation:

CRCG Grading Requirements	
Sieve Size	Percent Passing
3/8-inch	100
No. 4	35-100
No. 200	0.0-10.0

7. Joint Seal Material:

Requirements: Joint seal material shall be a hot-poured rubber compound intended for use in sealing joints and cracks in bituminous concrete pavements. Joint seal material must meet the requirements of AASHTO M-324 – Type 2.

8. Plant Requirements:

a. Mixing Plant and Machinery:

The mixing plant used in the preparation of the bituminous concrete shall comply with AASHTO M-156(M)/ASTM D 995 for a Batch Plant or a Drum Dryer Mixer Plant, and be approved by the Engineer.

b. Storage Silos:

For all mixes, the Trade Contractor may use silos for short-term storage of Superpave mixtures with prior notification and approval of the Engineer. A silo must have heated cones and an

unheated silo cylinder if it does not contain a separate internal heating system. Prior approval must be obtained for storage times greater than those indicated. When multiple silos are filled, the Trade Contractor shall discharge one silo at a time. Simultaneous discharge of multiple silos is not permitted.

Type of silo cylinder	Maximum storage time for all classes (hr)	
	HMA	WMA/PMA
Open Surge	4	Mfg Recommendations
Unheated – Non-insulated	8	Mfg Recommendations
Unheated – Insulated	18	Mfg Recommendations
Heated – No inert gas	TBD by the Engineer	

c. Documentation System: The mixing plant documentation system shall include equipment for accurately proportioning the components of the mixture by weight and in the proper order, controlling the cycle sequence and timing the mixing operations. Recording equipment shall monitor the batching sequence of each component of the mixture and produce a printed record of these operations on each delivery ticket, as specified herein. Material feed controls shall be automatically or manually adjustable to provide proportions within the tolerances listed below for any batch size.

An asterisk (*) shall be automatically printed next to any individual batch weight(s) exceeding the tolerances in ASTM D 995 section 8.7.3. The entire batching and mixing interlock cut-off circuits shall interrupt and stop the automatic batching operations when an error exceeding the acceptable tolerance occurs in proportioning.

There must be provisions so that scales are not manually adjusted during the printing process. In addition, the system shall be interlocked to allow printing only when the scale has come to a complete rest. A unique printed character (m) shall automatically be printed on the truck and batch plant printout when the automatic batching sequence is interrupted or switched to auto-manual or full manual during proportioning. For each day's production, each project shall be provided a clear, legible copy of these recordings on each delivery ticket.

d. Aggregates: The Trade Contractor shall ensure that aggregate stockpiles are managed to provide uniform gradation and particle shape, prevent segregation and cross contamination in a manner acceptable to the Engineer. For drum plants only, the Trade Contractor shall determine the percent moisture content at a minimum, prior to production and half way through production.

e. Mixture: The dry and wet mix times shall be sufficient to provide proper coating (minimum 95% as determined by AASHTO T 195(M)) of all particles with bitumen and produce a uniform mixture.

The Trade Contractor shall make necessary adjustments to ensure all types of bituminous concrete mixtures contain no more than 0.5% moisture throughout when tested in accordance with AASHTO T 329.

f. RAP: The Trade Contractor shall indicate the percent of RAP, the moisture content (as a minimum determined twice daily – prior to production and halfway through production), and the net dry weight of RAP added to the mixture on each truck ticket. For each day of production, the production shall conform to the job mix formula and RAP percentage and no change shall be made without the prior approval of the Engineer.

g. Asphalt Binder: The last day of every month, a binder log shall be submitted when the monthly production for the Department exceeds 5000 tons. Blending of PG binders from different suppliers or grades at the bituminous concrete production facility is strictly prohibited.

h. Warm mix additive: For mechanically foamed WMA, the maximum water injection rate shall not exceed 2.0% water by total weight of binder and the water injection rate shall be constantly monitored during production.

i. Field Laboratory: The Trade Contractor shall furnish the Engineer an acceptable field laboratory at the production facility to test bituminous concrete mixtures during production. The field laboratory shall have a minimum of 300 square feet, have a potable water source and drainage in accordance with the CT Department of Public Health Drinking Water Division, be equipped with all necessary testing equipment as well as with a PC, printer, and telephone with a dedicated hard-wired phone line. In addition, the PC shall have a high speed internet connection with a minimum upstream of 384 Kbps and a functioning web browser with unrestricted access to https://ctmail.ct.gov. This equipment shall be maintained in clean and good working order at all times and be made available for use by the Engineer.

The laboratory shall be equipped with a suitable heating system capable of maintaining a minimum temperature of 65°F. It shall be clean and free of all materials and equipment not associated with the laboratory. Windows shall be installed to provide sufficient light and ventilation. During summer months adequate cooling or ventilation must be provided so the indoor air temperature shall not exceed the ambient outdoor temperature. Light fixtures and outlets shall be installed at convenient locations, and a telephone shall be within audible range of the testing area. The laboratory shall be equipped with an adequate workbench that has a suitable length, width, and sampling tables, and be approved by the Engineer.

The field laboratory testing apparatus, supplies, and safety equipment shall be capable of performing all tests in their entirety that are referenced in AASHTO R 35(M), *Standard Practice for Superpave Volumetric Design for Hot-Mix Asphalt (HMA)* and AASHTO M 323, *Standard Specification for Superpave Volumetric Mix Design*. In addition, the quantity of all equipment and supplies necessary to perform the tests must be sufficient to initiate and complete the number of tests identified in Table M.04.03-2 for the quantity of mixture produced at the facility on a daily basis. The Trade Contractor shall ensure that the Laboratory is adequately supplied at all times during the course of the project with all necessary testing materials and equipment.

The Trade Contractor shall maintain a list of laboratory equipment used in the acceptance testing processes including but not limited to, balances, scales, manometer/vacuum gauge, thermometers, gyratory compactor, clearly showing calibration and/or inspection dates, in accordance with AASHTO R-18.The Trade Contractor shall notify the Engineer if any modifications are made to the equipment within the field laboratory. The Trade Contractor shall take immediate action to replace, repair, and/or recalibrate any piece of equipment that is out of calibration, malfunctioning, or not in operation.

B. Mix Design and Job Mix Formula (JMF)

1. Marshall Method - Class 1, 2, 3, 4, 5, 5A, 5B and 12:
   a. Requirements: When specified, the Marshall method shall be employed to develop a bituminous concrete mix design that includes a JMF consisting of target values for gradation and bitumen content for each class of bituminous concrete designated for the project in

accordance with the latest Asphalt Institute's MS-2 manual. Each class of bituminous concrete must meet the requirements as shown in Table M.04.02-1.

b. Basis of Approval: The Trade Contractor shall submit to the Engineer a request for approval of the JMF annually in accordance with one of the methods described herein. Prior to the start of any paving operations, the JMF and production percentage of bitumen must be accepted by the Engineer, and the Trade Contractor must demonstrate the ability to meet the accepted JMF and production percentage of bitumen for each class of mixture. Additionally, the fraction of material retained between any two consecutive sieves shall not be less than 4%.

The Engineer will test each class of mixture for compliance with the submitted JMF and Table M.04.02-1. The maximum theoretical density (Gmm) will be determined by AASHTO T 209(M). If the mixture does not meet the requirements, the JMF shall be adjusted within the ranges shown in Table M.04.02-1 until an acceptable mixture is produced. All equipment, tests and computations shall conform to the Marshall method in accordance with AASHTO T 245(M).

An accepted JMF from the previous operating season may be acceptable to the Engineer provided that there are no changes in the sources of supply for the coarse aggregate, fine aggregate, recycled material (if applicable) and the plant operation had been consistently producing acceptable mixture.

The Trade Contractor shall not change sources of supply after a JMF has been accepted. Before a new source of supply for materials is used, a new JMF shall be submitted to the Engineer for approval.

c. Marshall Mixture (Virgin): For bituminous concrete mixtures that contain no recycled material, the limits prescribed in Table M.04.02-1 govern. The Trade Contractor shall submit to the Engineer for approval, a JMF with the individual fractions of the aggregate expressed as percentages of the total weight of the mix and the source(s) of all materials. The JMF shall indicate two bitumen contents; the JMF target percentage and a production percentage (actual amount added to mix) of bitumen for each mix class by total weight. For surface course Class 1, a 0.45 power gradation chart shall also be submitted on which is plotted the percentage passing each sieve. The JMF shall also indicate the target temperature of completed mixture as it is dumped from the mixer and tested in accordance with Sub-article 2.1.C Production Requirements.

d. Marshall Mixtures with RAP: In addition to Sub-articles 2.1.B.1. through 2.1.C, RAP in bituminous concrete shall comply with requirements stated in Sub-article 2.1.A, and as stated herein. Upon approval of the Engineer, a maximum of 15% RAP may be used with no binder grade modification. RAP material shall not be used with any other recycling option.
The Trade Contractor may increase the RAP percentage in 5% increments up to a maximum of 30% provided a new JMF is accepted by the Engineer. The following information shall be included in the JMF submittal:
   - Gradation and asphalt content of the RAP.
   - Percentage of RAP to be used.
   - Virgin aggregate source(s).
   - Total binder content based on total mixture weight.
   - Production pull percentage of added virgin binder based on total mixture weight.
   - Gradation of combined bituminous concrete mixture (including RAP).
   - Grade of virgin added, if greater than 15% of total mix weight.

e. Marshall Mixture with CRCG: In addition to sub-article 2.1.B.1a, for bituminous concrete that contains CRCG, the Trade Contractor shall submit a materials certificate to the Engineer stating that the mixture and its components comply with requirements stated in Sub-article 2.1.A.6.. Additionally, 1% hydrated lime, or other accepted non-stripping agent, shall be added to all mixtures containing CRCG. CRCG material shall not be used with any other recycling option.

2. Cold Patch Method - Class 5, 5A, 5B:

a. Requirements: This mixture must be capable of being stockpiled and workable at all times. A non-stripping agent accepted by the Engineer shall be used in accordance with manufacturer's recommendations. The Trade Contractor shall take necessary steps to ensure that this mixture uses aggregate containing no more than 1% moisture and is not exposed to any rain, snow, or standing water for a period of 6 hours after being mixed. This mixture shall be mixed and stockpiled at the point of production on a paved surface at a height not greater than 4 feet during the first 48 hours prior to its use.
   i. Class 5A mixture shall have 3/8 to ½ inch polypropylene fibers that have been approved by the Engineer added at a rate of 6 pounds per ton of mixture.
   ii. Class 5B mixture shall have ¼ inch polyester fibers that have been approved by the Engineer added at the rate of 2 1/2 pounds per ton of mixture.
   iii. Class 5 mixture shall not contain fibers.

b. Basis of Approval: The aggregates, fibers and binder (MC-250) shall meet the requirements as specified in Sub-articles 2.1.A through 4 and in Table M.04.02-1. The use of recycled material is not permitted with these classes of bituminous concrete. Mixtures not conforming to the binder content as shown in Table M.04.02-1 shall be subject to rejection. There is a two test minimum per day of production. Mixtures not conforming to the gradation as shown in Table M.04.02-1 shall be subject to corrective procedure until approved by Engineer.

TABLE M.04.02 – 1 MASTER RANGES FOR MARSHALL BITUMINOUS-CONCRETE MIXTURES

Notes: (a) 75 blow (Marshall Criteria). (b) 3-6% when used for a roadway wearing surface. (c) For divided highways with 4 or more lanes, a stability of 1500 lbs is required. (d) Contains an accepted non-stripping compound. (e) To help prevent stripping, the mixed material will be stockpiled on a paved surface and at a height not greater than 4 feet during the first 48 hours. (f) As determined by AASHTO T 245(M). (g) The percent passing the #200 sieve shall not exceed the percentage of bituminous asphalt binder determined by AASHTO T 164 or AASHTO T 308(M). (h) Mixture with 5% or more aggregate retained on ¾-inch sieve. (i) Mixtures finer than condition (h) above. (j) Class 5 mixture shall contain no fibers. Class 5A mixture shall have 3/8 to ½ inch polypropylene fibers that have been previously accepted by the Engineer added at a minimum rate of 6 pounds per ton of mixture. Class 5B mixture shall have ¼ inch polyester fibers that have been previously accepted by the Engineer added at the minimum rate of 2 1/2 pounds per ton of mixture

CLASS	**1**	**2**	**3**	**4**	**12**	**5 (e)(j)**	**5A (e)(j)**	**5B (e)(j)**	**JMF % Tol. (±)**
Grade of PG Binder content %	**PG 64-22 5.0 – 6.5**	**PG 64-22 5.0 – 8.0**	**PG 64-22 6.5 - 9.0**	**PG 64-22 4.0 - 6.0**	**PG 64-22 7.5 - 10.0**	**MC-250 (d) 6.0 - 7.5**	**MC-250 (d) 6.0 - 7.5**	**MC-250 (d) 6.0 - 7.5**	**0.4**
Sieve Size	**Percent Passing (%)**								
# 200	3.0 – 8.0 (g)	3.0 – 8.0 (g)	3.0 – 8.0 (g)	0.0 – 5.0 (g)	3.0 – 10.0 (g)	0.0 - 2.5	0 .0- 2.5	0.0 - 2.5	2.0
# 50	6 – 26	8 – 26	10 - 30	5 - 18	10 - 40				4
# 30	10 - 32	16 - 36	20 - 40		20 - 60	2 - 15	2 – 15	2 - 15	5
# 8	28 - 50	40 - 64	40 - 70	20 - 40	60 - 95	10 - 45	10 – 45	10 - 45	6
# 4	40 - 65	55 - 80	65 - 87	30 - 55	80 - 95	40 - 100	40 – 100	40 - 100	7
¼”									
3/8 “	60 - 82	90 - 100	95 - 100	42 - 66	98 - 100	100	100	100	8
½ “	70 - 100	100	100		100				8
¾”	90 - 100			60 - 80					8
1”	100								
2”				100					
Additionally, the fraction of material retained between any two consecutive sieves shall not be less than 4%									
Mixture Temperature									
Binder	325°F maximum					140-185° F			
Aggregate	280-350° F					100-175° F			
Mixtures	**265-325° F**				**275-325°F**	**120-175° F**			**25 °F**
Mixture Properties									
VOIDS - %	3.0 – 6.0 (a)	2.0 – 5.0 (b)	0 – 4.0		0 - 5.0 (a)				
Stability (f) lbs. min.	1200 (c)	1000	1000		1000				
FLOW (f) in.	.08 - .15	.08 - .15	.08 - .18		.08 - .15				
VMA % - min.	15(h) :16 (i)								

3. Superpave Design Method – S0.25, S0.375, S0.5, and S1

a. Requirements: The Trade Contractor or its representative shall design and submit Superpave mix designs annually for approval. The design laboratory developing the mixes shall be approved by the Engineer. The mix design shall be based on the specified Equivalent Single-Axle Loads (ESAL). Each bituminous concrete mix type must meet the requirements shown in Tables M.04.02-2 thru Table M.04.02-5 and in accordance with AASHTO M 323(M) and AASHTO R 35(M). The mix design shall include the nominal maximum aggregate size and a JMF consisting of target values for gradation and bitumen content for each bituminous concrete mix type designated for the project.

The trade contractor shall provide test results with supporting documentation from an AASHTO Materials Reference Laboratory (AMRL) with the use of NETTCP Certified Technicians for the following tests;

1. Aggregate consensus properties for each type & level, as specified in Table M.04.02-3. In addition the Gsa, Gsb, Pw_a shall also be provided for each component aggregate.

2. New mixes shall be tested in accordance with AASHTO T 283(M) *Standard Method of Test for Resistance of Compacted Hot-Mix Asphalt (HMA) to Moisture-Induced Damage*, (TSR). The compacted specimens may be fabricated at a bituminous concrete facility and then tested at an AMRL accredited facility.

   The AASHTO T 283(M) test results, specimens, and corresponding JMF sheet (Form MAT-429s) shall be submitted by the Trade Contractor for review.

The Trade Contractor shall supply the Engineer with 1 gallon of the specified PG binder and 1 gallon of the same PG binder with the warm mix additive blended into it. The MSDS for the WMA additive shall be included with every submittal.

In addition, minimum binder content values apply to all types of bituminous concrete mixtures, as stated in Table M.04.02-5. For mixtures containing RAP, the virgin production and the anticipated proportion of binder contributed by the RAP cannot be less than the total permitted binder content value for that type nor the JMF minimum binder content.

i. Superpave Mixture (virgin): For bituminous concrete mixtures that contain no recycled material, the limits prescribed in Tables M.04.02-2 thru Table M.04.02-5 apply. The Trade Contractor shall submit a JMF, on a form provided by the Engineer, with the individual fractions of the aggregate expressed as percentages of the total weight of the mix and the source(s) of all materials to the Engineer for approval. The JMF shall indicate the corrected target binder content and applicable binder correction factor (ignition oven or extractor) for each mix type by total weight of mix. The mineral filler (dust) shall be defined as that portion of blended mix that passes the #200 sieve by weight when tested in accordance with AASHTO T 30(M). The dust-to-effective asphalt (D/Pbe) ratio shall be between 0.6 and 1.2 by weight. The dry/wet mix times and hot bin proportions (batch plants only) for each type shall be included in the JMF.

The percentage of aggregate passing each sieve shall be plotted on a 0.45 power gradation chart and shall be submitted for all bituminous concrete mixtures. This chart shall delineate the percentage of material passing each test sieve size as defined by the JMF. The percentage of aggregate passing each standard sieve shall fall within the specified control points, but outside the

restricted zone limits as shown in Tables M.04.02-2 thru Table M.04.02-5. Mixes with documented performance history which pass through the restricted zone may be permitted for use as long as all other physical and volumetric criteria meets specifications as specified in Tables M.04.02-2 thru Table M.04.02-5 and with prior approval from the Engineer. A change in the JMF requires that a new chart be submitted.

i. Superpave Mixtures with RAP: Use of approved RAP may be allowed with the following conditions:

- RAP amounts up to 15% may be used with no binder grade modification.

- RAP amounts up to 20% may be used provided a new JMF is approved by the Engineer. The JMF submittal shall include the grade of virgin binder added and test results that show the combined binder (recovered binder from the RAP, virgin binder at the mix design proportions and warm mix asphalt additive if used) meets the requirements of the specified binder grade.

  Unless approved by the Engineer, RAP material shall not be used with any other recycling option.

b. Basis of Approval: On an annual basis, the Trade Contractor shall submit to the Engineer any bituminous concrete mix design, and JMF anticipated for use on Department projects. Prior to the start of any paving operations, the mix design and JMF must be approved by the Engineer. Bituminous concrete mixture supplied to the project without an approved mix design and JMF will be rejected. The following information must be included in the mix design submittal:

i. Gradation, specific gravities and asphalt content of the RAP,
ii. Source of RAP and percentage to be used.
iii. Warm mix Technology and manufacturer's recommended additive rate and tolerances, mixing and compaction temperature ranges for the mix with and without the warm-mix technology incorporated.
iv. Result of TSR testing, and if applicable Anti-strip manufacturer, and dosage rate.
v. Target Temperature at plant discharge.

Note – Testing to be performed shall be done in accordance with sub-Article 2.1.C
The JMF shall be accepted if the Plant mixture and materials meet all criteria as specified in Tables M.04.02-2 thru Table M.04.02-5. If the mixture does not meet the requirements, the trade contractor shall adjust the JMF within the ranges shown in Tables M.04.02-2 thru Table M.04.02-5 until an acceptable mixture is produced. All equipment, tests, and computations shall conform to the latest AASHTO R-35(M) and AASHTO M-323(M).

Any JMF, once approved, shall only be acceptable for use when it is produced by the designated plant, it utilizes the same component aggregates and binder source, and it continues to meet all criteria as specified herein, and component aggregates are maintained within the tolerances shown in Table M.04.02-2.

The Trade Contractor shall not change any component source of supply including consensus properties after a JMF has been accepted. Before a new source of materials is used, a revised JMF shall be submitted to the Engineer for approval. Any approved JMF applies only to the plant for which it was submitted. Only one mix with one JMF will be approved for production at any

one time. Switching between approved JMF mixes with different component percentages or sources of supply is prohibited.

Superpave mixture with CRCG: In addition to Sub-articles 2.1.B. – 3 a through c, for bituminous concrete mixtures that contain CRCG, the Trade Contractor shall submit a materials certificate to the Engineer stating that the CRCG complies with requirements stated in Sub-article 2.1.A, as applicable. Additionally, 1% hydrated lime, or other accepted non-stripping agent, shall be added to all mixtures containing CRCG. CRCG material shall not be used with any other recycling option.

c. Mix Status: Each facility will have each type of bituminous concrete mixture evaluated based on the previous year of production, for the next construction paving season, as determined by the Engineer. Based on the rating a type of mixture receives it will determine whether the mixture can be produced without the completion of a PPT. Ratings will be provided to each bituminous concrete producer annually prior to the beginning of the paving season.

The rating criteria are based on compliance with Air Voids and Voids in Mineral Aggregate (VMA) as indicated in Table M.04.03-3: *Superpave Master Range for Bituminous Concrete Mixture Production*, and are as follows:

Criteria A: Based on Air Voids. Percentage of acceptance results with passing air voids.

Criteria B: Based on Air Voids and VMA. The percentage of acceptance results with passing VMA, and the percentage of acceptance results with passing air voids, will be averaged.

The final rating assigned will be the lower of the rating obtained with Criteria A or Criteria B.

Ratings are defined as:

"A" – Approved:
A rating of "A" is assigned to each mixture type from a production facility with a current rating of 70% passing or greater.

"PPT" – Pre-Production Trial:
Rating assigned to each mixture type from a production facility when:

1. there are no passing acceptance production results submitted to the Department from the previous year;
2. there is a source change in one or more aggregate components from the JMF on record by more than 10% by weight;
3. there is a change in RAP percentage ,
4. the mixture has a rating of less than 70% from the previous season;
5. a new JMF not previously submitted.

Bituminous concrete mixtures rated with a "PPT" cannot be shipped or used on Department projects. A passing "PPT" test shall be performed with NETTCP certified personnel on that type of mixture by the bituminous concrete producer and meet all specifications (Table M.04.02-2 Table M.04.02-5) before production shipment may be resumed.

Trade Contractors that have mix types rated a "PPT" may use one of the following methods to change the rating to an "A."

Option A: Schedule a day when a Department inspector can be at the facility to witness a passing "PPT" test or,

Option B: When the Trade Contractor or their representative performs a "PPT" test without being witnessed by an inspector, the Trade Contractor shall submit the test results and a split sample including 2 gyratory molds, 5,000 grams of boxed bituminous concrete for binder and gradation determination, and 5,000 grams of cooled loose bituminous concrete for Gmm determination for verification testing and approval. Passing verifications will designate the bituminous concrete type to be on an "A" status. Failing verifications will require the trade contractor to submit additional trials.

Option C: When the Trade Contractor or their representative performs a "PPT" test without being witnessed by a Department inspector, the Engineer may verify the mix in the Trade Contractor's laboratory. Passing verifications will designate the bituminous concrete type to be an "A" status. Failing verifications will require the Trade Contractor to submit additional trials.

When Option (A) is used and the "PPT" test meets all specifications, the "PPT" test is considered a passing test and the rating for that mix is changed to "A". When the "PPT" test is not witnessed, the "PPT" Option (B) or (C) procedure must be followed. If the "PPT" Option (B) procedure is followed, the mixtures along with the test results must be delivered to the Materials Testing Lab. The test results must meet the "C" tolerances established by the Engineer. The tolerance Table is included in the Department's current QA Program for Materials, Acceptance and Assurance Testing Policies and Procedures.

"U" – No Acceptable Mix Design on File:

Rating assigned to a type of mixture that does not have a JMF submitted, or the JMF submitted has not been approved, or is incomplete. A mix design or JMF must be submitted annually seven (7) days prior in order to obtain an "A," or "PPT" status for that mix. A "U" will be used only to designate the mix status until the mix design has been approved, and is accompanied with all supporting data as specified. Bituminous concrete mixtures rated with a "U" cannot be used on Department projects.

TABLE M.04.02– 2: SUPERPAVE MASTER RANGE FOR BITUMINOUS CONCRETE MIXTURE DESIGN CRITERIA

Notes: (1) Minimum Pb as specified in Table M.04.02-5. (2) Voids in Mineral Aggregates shall be computed as specified herein. (3) Control point range is also defined as the master range for that mix. (4) Dust is considered to be the percent of materials passing the #200 sieve. (5) For WMA, lower minimum aggregate temperature will require Engineer's approval. (6) For WMA and PMA, the mix temperature shall meet manufacturer's recommendations.

	S0.25				**S0.375**				**S0.5**				**S1**			
Sieve	CONTROL POINTS (3)		*RESTRICTED ZONE*		CONTROL POINTS(3)		*RESTRICTED ZONE*		CONTROL POINTS(3)		*RESTRICTED ZONE*		CONTROL POINTS(3)		*RESTRICTED ZONE*	
inches	Min (%)	Max (%)	*Max (%)*	*Min (%)*	Min (%)	Max (%)	*Min (%)*	*Max (%)*	Min (%)	Max (%)	*Min (%)*	*Max (%)*	Min (%)	Max (%)	*Min (%)*	*Max (%)*
2.0	-	-	-	-	-	-	-	-	-	-	-	-	-	-	-	-
1.5	-	-	-	-	-	-	-	-	-	-	-	-	100	-	-	-
1.0	-	-	-	-	-	-	-	-	-	-	-	-	90	100	-	-
3/4	-	-	-	-	-	-	-	-	100	-	-	-	-	90	-	-
1/2	100	-	-	-	100	-	-	-	90	100	-	-	-	-	-	-
3/8	97	100	-	-	90	100	-	-	-	90	-	-	-	-	-	-
#4	-	90	-	-	-	90	-	-	-	-	-	-	-	-	*39.5*	*39.5*
#8	32	67	*47.2*	*47.2*	32	67	*47.2*	*47.2*	28	58	*39.1*	*39.1*	19	45	*26.8*	*30.8*
#16	-	-	*31.6*	*37.6*	-	-	*31.6*	*37.6*	-	-	*25.6*	*31.6*	-	-	*18.1*	*24.1*
#30	-	-	*23.5*	*27.5*	-	-	*23.5*	*27.5*	-	-	*19.1*	*23.1*	-	-	*13.6*	*17.6*
#50	-	-	*18.7*	*18.7*	-	-	*18.7*	*18.7*	-	-	*15.5*	*15.5*	-	-	*11.4*	*11.4*
#100	-	-	-	-	-	-	-	-	-	-	-	-	-	-	-	-
#200	2.0	10.0	-	-	2.0	10.0	-	-	2.0	10.0	-	-	1.0	7.0	-	-
Pb (1)	-	-	-	-	-	-	-	-	-	-	-	-	-	-	-	-
VMA (2) (%)	16.0 ± 1				16.0 ± 1				15.0 ± 1				13.0 ± 1			
VA (%)	4.0 ± 1				4.0 ± 1				4.0 ± 1				4.0 ± 1			
Gse	JMF value				JMF value				JMF value				JMF value			
Gmm	JMF ± 0.030				JMF ± 0.030				JMF ± 0.030				JMF ± 0.030			
Dust/Pbe(4)	0.6 – 1.2				0.6 – 1.2				0.6 – 1.2				0.6 – 1.2			
Agg. Temp(5)	280 – 350F				280 – 350F				280 – 350F				280 – 350F			
Mix Temp(6)	265 – 325 F				265 – 325 F				265 – 325 F				265 – 325 F			
Design TSR	≥ 80%				≥ 80%				≥ 80%				≥ 80%			
T-283 Stripping	Minimal, as determined by the Engineer															

TABLE M.04.02–3
SUPERPAVE MASTER RANGE FOR CONSENSUS PROPERTIES OF COMBINED AGGREGATE STRUCTURES

Notes: **(1)** If less than 25 % of a given layer is within 4 inches of the anticipated top surface, the layer may be considered to be below 4 inches for mixture design purposes.

Traffic Level	Design ESALs (80 kN)	Coarse Aggregate Angularity [1] ASTM D 5821	Fine Aggregate Angularity [7] AASHTO T 304	Flat or Elongated Particles ASTM D 4791	Sand Equivalent AASHTO T 176
- - - - -	(million)			> # 4	- - - - -
1*	< 0.3	55/- -	40	10	40
2	0.3 to < 3.0	75/- -	40	10	40
3	≥ 3.0	95/90	45	10	45
	Design ESALs are the anticipated project traffic level expected on the design lane, projected over a 20 year period, regardless of the actual expected design life of the roadway.	Criteria presented as minimum values. 95/90 denotes that a minimum of 95% of the coarse aggregate, by mass, shall have one fractured face and that a minimum of 90% shall have two fractured faces.	Criteria presented as minimum percent air voids in loosely compacted fine aggregate passing the #8 sieve.	Criteria presented as maximum Percent by mass of flat or elongated particles of materials retained on the #4 sieve, determined at 3:1 ratio.	Criteria presented as minimum values for fine aggregate passing the #8 sieve.

*** NOTE: Level 1 for use by Towns and Municipalities ONLY.**

TABLE M.04.02– 4: SUPERPAVE MASTER RANGE FOR TRAFFIC LEVELS AND DESIGN VOLUMETRIC PROPERTIES.

Traffic Level	Design ESALs	Number of Gyrations by Superpave Gyratory Compactor			Percent Density of Gmm from HMA/WMA specimen			Voids Filled with Asphalt (VFA) Based on Nominal mix size – inch			
	(million)	Nini	Ndes	Nmax	Nini	Ndes	Nmax	0.25	0.375	0.5	1
1*	< 0.3	6	50	75	≤ 91.5	96.0	≤ 98.0	70 - 80	70 - 80	70 - 80	67 - 80
2	0.3 to < 3.0	7	75	115	≤ 90.5	96.0	≤ 98.0	65 - 78	65 - 78	65 - 78	65 - 78
3	≥ 3.0	8	100	160	≤ 90.0	96.0	≤ 98.0	73 – 76	73 - 76	65 - 75	65 - 75

*** NOTE: Level 1 for use by Towns and Municipalities ONLY.**

TABLE M.04.02– 5: SUPERPAVE MINIMUM BINDER CONTENT BY MIX TYPE & LEVEL.

Mix Type	Level	Binder Content Minimum (1)
S0.25	1*	5.6
S0.25	2	5.5
S0.25	3	5.4
S0.375	1*	5.6
S0.375	2	5.5
S0.375	3	5.4
S0.5	1*	5.0
S0.5	2	4.9
S0.5	3	4.8
S1	1*	4.6
S1	2	4.5
S1	3	4.4

*** NOTE: Level 1 for use by Towns and Municipalities ONLY.**

C. Production Requirements:

1. **Quality Control Plan and Processes:** The Trade Contractor shall submit a Quality Control Plan (QCP) for bituminous concrete production specifically for the plant producing the bituminous concrete mixture for review and approval of the Engineer on an annual basis.

   The QCP shall describe the organization and procedures which the Trade Contractor shall use to administer quality control. The QCP shall include the procedures used to control the production process, to determine when immediate changes to the processes are needed, and to implement the required changes. The QCP must detail the inspection, sampling and testing protocols to be used, and the frequency for each.

   Control Chart(s) shall be developed and maintained for critical aspect(s) of the production process as determined by the Trade Contractor. The control chart(s) shall identify the material property, applicable upper and lower control limits, and be updated with current test data. The control chart(s) shall be used as part of the quality control system to document variability of the bituminous concrete production process. The control chart(s) shall be submitted to the Engineer upon request.

   The QCP shall also include the name and qualifications of a Quality Control Manager. The Quality Control Manager shall be responsible for the administration of the QCP, including compliance with the plan and any plan modifications. All daily QC sampling, inspection and test reports shall be reviewed by the Quality Control Manager and be submitted to the Engineer upon request.

   The QCP shall also include the name and qualifications of any outside testing laboratory performing any QC functions on behalf of the Trade Contractor. The QCP must also include a list of sampling & testing methods and frequencies used during production, and the names of all Quality Control personnel and their duties.

Approval of the QCP does not imply any warranty by the Engineer that adherence to the plan will result in production of bituminous concrete that complies with these specifications. The Trade Contractor shall submit any changes to the QCP as work progresses.

2. **Acceptance Sampling & Testing Methods:** Acceptance samples of mixtures shall be obtained from the hauling vehicles and tested by the Trade Contractor at the facility during each day's production.

The hauling vehicle from which samples are obtained shall be selected using stratified – random sampling based on the total estimated tons of production in accordance with ASTM D 3665, except that the first test shall be randomly taken from the first 151 tons or as directed by the Engineer.

The number of sub lots and tests required per sub lot is based on the total estimated tons of production per day as indicated in Table M.04.03-1. Quantities of the same type/level mix per plant may be combined daily for multiple state projects to determine the number of sub lots.

An acceptance test shall not be performed within 150 tons of production from a previous acceptance test unless approved by the Engineer. Quality Control tests are not subject to this restriction. Unless otherwise tested, a minimum of one (1) acceptance test shall be performed for every four days of production at a facility for each type/level mix (days of production may or may not be consecutive days).

The Trade Contractor shall submit all acceptance tests results to the Engineer within 24 hours or prior to the next day's production. All acceptance test specimens and supporting documentation must be retained by the Trade Contractor. Verification testing will be performed by the Engineer on the retained specimens in accordance with the Department's QA Program for Materials.

Should the Department be unable to verify the Trade Contractor's acceptance test result(s) due to a failure of the Trade Contractor to retain acceptance test specimens or supporting documentation, the Trade Contractor shall review its quality control plan, determine the cause of the nonconformance and respond in writing within 24 hours to the Engineer describing the corrective action taken at the plant. In addition the Trade Contractor must provide supporting documentation or test results to validate the subject acceptance test result(s). The Engineer may invalidate any positive adjustments for material corresponding to the acceptance test(s). Failure of the Trade Contractor to adequately address quality control issues at a facility may result in suspension of production for Department projects at that facility.

Trade Contractor personnel performing acceptance sampling and testing must be present at the facility prior to, and during production, and be certified as a NETTCP HMA Plant Technician or Interim HMA Plant Technician and be in good standing. Production of material for use on State projects must be suspended by the Trade Contractor if such personnel are not present.

Technicians found by the Engineer to be non-compliant with NETTCP or Department policies may be removed by the Engineer from participating in the acceptance testing process for Department projects until their actions can be reviewed.

Anytime during production that testing equipment becomes inoperable, production can continue for a maximum of 1 hour. The Trade Contractor shall obtain box sample(s) in accordance with Table M.04.03-1 to satisfy the daily acceptance testing requirement for the quantity shipped to the project. The box sample(s) shall be tested once the equipment issue has been resolved to the

satisfaction of the Engineer. Production beyond 1 hour may be considered by the Engineer. Production will not be permitted beyond that day until the subject equipment issue has been resolved.

Table M.04.03 – 1: Acceptance Testing Frequency per Type/Level/Plant

Daily quantity produced in tons (lot)	**Number of Sub Lots/Tests**
0 to 150	0, Unless requested by the Engineer
151 to 600	1
601 to 1,200	2
1,201 to 1,800	3
1,801 or greater	1 per 600 tons or portions thereof

a. **Marshall Mix Acceptance Sampling and Testing Procedures:** When the Marshall mix design is specified, the following acceptance procedures and AASHTO test methods shall be used:

Table M.04.03 – 2: Marshall Acceptance Test Procedures

Protocol	**Reference**	**Description**
1	**AASHTO T 30(M)**	Mechanical Analysis of Extracted Aggregate
2	**AASHTO T 40(M)**	Sampling Bituminous Materials
3	**AASHTO T 308(M)**	Binder content by Ignition Oven method (adjusted for aggregate correction factor)
4	**AASHTO T 245(M)**	Resistance to Plastic Flow of Bituminous Mixtures Using Marshall Apparatus
5	**AASHTO T 209(M)**	Theoretical Maximum Specific Gravity and Density of Bituminous Paving Mixtures
6	**AASHTO T 269(M)**	Percent Air Voids in Compacted Dense and Open Bituminous Paving Mixtures
7	**AASHTO T 329**	Moisture Content of Hot-Mix Asphalt (HMA) by Oven Method

i. Cessation of Supply: Marshall Mix Production shall cease for the Project from any facility that consistently fails to produce mixture that meets the JMF and volumetric properties. The criteria for ceasing the supply of a class of mixture from any plant are as follows:

1) Off-Test Status: The results of AASHTO T 164 or AASHTO T 308(M) and T 30(M) will be used to determine if the mixture is within the tolerances shown in Table M.04.02-1. The Trade Contractor will be notified that a plant is "off test" for a class of mixture when the test results indicate that any single value for bitumen content or gradation are not within the tolerances shown in Table M.04.02-1 for that class of mixture.
2) When multiple plants and silos are located at one site, mixture supplied to one project is considered as coming from one source.

3) If a test indicates that the bitumen content or gradation are outside the tolerances, the Trade Contractor may make a single JMF change on classes 1, 2, 3, 4 and 12 as allowed by the Engineer prior to any additional testing. A JMF change shall include the date and name of the Engineer that allowed it. Consecutive test results outside the requirements of Table M.04.02-1 JMF tolerances may result in rejection of the mixture.
4) The Engineer may cease supply of mixture from the plant when the test results from three non-consecutive samples of a class of mixture are not within the JMF tolerances or the test results from two non-consecutive samples not within the master range indicated in Table M.04.02-1 during any one production period, due to inconsistent production.
5) Any modification to the JMF shall not exceed 50% of the JMF tolerances indicated in Table M.04.02-1 for any given component of the mixture without approval of the Engineer. When such an adjustment is made to the bitumen, the corresponding production percentage of bitumen shall be revised accordingly.

b. Adjustments for Off Test Mixture under Cessation of Supply: The bituminous concrete plant shall cease supplying to the project:
   i. When the test results from three consecutive samples are "off test" and not within the JMF tolerances or,

   ii. The test results from two consecutive samples are "off test" and not within the ranges indicated in Table M.04.02 – 1 or,

   iii. When the percent of material passing the minus #200 sieve material exceeds the percent of extracted bitumen content for three consecutive samples during any production period of the values stated in Table M.04.02-1:
      1) The quantity of mixtures shipped to the project determined to be "off test" and outside the tolerances will be tabulated by the Engineer.
      2) Following cessation, a trial production period will be required at the plant for that class of mixture. Use of that class of mixture from that plant will be prohibited on the Project until the plant has demonstrated the ability to consistently produce acceptable mixture.
      3) When the Engineer has accepted the mixtures from the trial production period, the use of that mixture on the Project may resume.

ii. Superpave Mix Acceptance Sampling and Testing Procedures: When the Superpave mix design is specified, the following acceptance and AASHTO test procedures shall be used:

Table M.04.03– 3: Superpave Acceptance Testing Procedures

Protocol	Reference	Description
1	AASHTO T 168(M)	Sampling of bituminous concrete
2	AASHTO T 308(M)	Binder content by Ignition Oven method (adjusted for aggregate correction factor)
3	AASHTO T 30(M)	Gradation of extracted aggregate for bituminous concrete mixture
4	AASHTO T 312(M)	(1)Superpave Gyratory molds compacted to N_{des}
5	AASHTO T 166(M)	(2)Bulk specific gravity of bituminous concrete
6	AASHTO R 35(M)	(2)Air voids, VMA
7	AASHTO T 209(M)	Maximum specific gravity of bituminous concrete (average of two tests)
8	AASHTO T 329	Moisture content of Production bituminous concrete

The Trade Contractor shall perform moisture susceptibility (TSR) testing annually for all design levels of HMA-, WMA-, and PMA- S0.5 plant-produced mixtures, in accordance with the latest version of AASHTO T 283(M).

If any material source changes from the previous year, or during the production season, a mix design TSR as well as a production TSR is required for the new mixture. The AASHTO T 283(M) test shall be performed at an AASHTO Materials Reference Laboratory (AMRL) by NETTCP Certified Technicians. The test results and specimens shall be submitted to the Engineer for review. This shall be completed within 30 days from the start of production. Superpave mixtures that require anti-strip additives (either liquid or mineral) shall continue to meet all requirements specified herein for binder and bituminous concrete. The Trade Contractor shall submit the name, manufacturer, percent used, and MSDS sheet for the anti-strip additive (if applicable) to the Engineer. In addition, compaction of samples shall be accomplished utilizing an accepted Superpave Gyratory Compactor (SGC), supplied by the Trade Contractor. The SGC shall be located at the facility supplying mixture to the project.

a. Determination of Off-Test Status:

i. Off Test Status: Superpave mixes shall be considered *"off test"* when any Control Point Sieve, VA, VMA, and Gmm values are outside of the limits specified in Table M.04.03-3 and the computed binder content (Pb) established by AASHTO T308(M) or as documented table on the vehicle delivery ticket is below the minimum binder content stated in table M.04.02-5. Note that further testing of samples or portions of samples not initially tested for this purpose cannot be used to change the status.

ii. Any time the bituminous concrete mixture is considered Off-test:

1. The Trade Contractor shall notify the Engineer (and project staff) when the plant is *"off test"* for a type of mixture. When multiple plants and silos are located at one site, mixture supplied to one project is considered as coming from one source for the purpose of applying the *"off test"* determination.

2. The Trade Contractor must take immediate actions to correct the deficiency, minimize *"off test"* production to the project, and obtain an additional Process Control (PC) test after any corrective action to verify production is in conformance to the specifications. A PC test will not be used for acceptance and is solely for the use of the Trade Contractor in its quality control process.

b. Cessation of Supply for Superpave Mixtures with JMF and volumetric property deficiencies: Production of bituminous concrete shall cease for the Project from any plant that consistently fails to produce mixture that meets the JMF and volumetric properties.

A Trade Contractor shall cease to supply mixture from a plant when:

1. Bituminous concrete mixture is "off test" on three (3) consecutive tests for VMA or Gmm, regardless of date of production due to inconsistency (i.e., small production requires 1 test per day for multiple days).

2. Bituminous concrete mixture is "off test" on two (2) consecutive tests for the Control Point sieves in one day's production.

Following cessation, the Trade Contractor shall immediately make necessary material or process corrections and run a Pre-Production Trial (PPT) for that type of mixture. Use of that type of mixture from that plant will be prohibited on the Project until the Trade Contractor has demonstrated the ability to produce acceptable mixture from that facility. When the Trade Contractor has a passing test and has received approval from the Engineer, the use of that mixture to the Project may resume.

c. Cessation of Supply for Superpave Mixtures with minimum binder content deficiencies: Production of bituminous concrete shall cease for the Project from any plant that consistently fails to produce mixture that meets the Superpave minimum binder content by mix type and level listed in Table M.04.02-5.

A Trade Contractor shall cease to supply mixture from a plant when the binder content (Pb) is below the requirements of Table M.04.03-5 on the ignition oven test result after two (2) consecutive tests, regardless of the date of production.

Following cessation, the Trade Contractor shall immediately make necessary material or process corrections and run a Pre-Production Trial (PPT) for that type of mixture. Use of that type of mixture from that plant will be prohibited on the Project until the Trade Contractor has demonstrated the ability to produce acceptable mixture from that facility. When the Trade Contractor has a passing test and has received approval from the Engineer, the use of that mixture to the Project may resume.

d. JMF Changes for Superpave Mixture Production: It is understood that a JMF change is effective from the time it was submitted forward and is not retroactive to the previous test or tests. JMF changes are permitted to allow for trends in aggregate and mix properties but every effort shall be employed by the Trade Contractor to minimize this to ensure a uniform and dense pavement.

JMF changes to the G_{mm} or mix Absorption Correction Factor (A_{cf}) are only permitted prior to or after a production shift for all bituminous-concrete types of mixtures and only when they:

i. Are requested in writing and pre-approved by the Engineer;
ii. Are based on a minimum of a two test trend;
iii. Are documented with a promptly submitted revised JMF on form provided by the Engineer.
iv. A revised JMF submittal shall include the date and name of the Engineer that allowed it.

TABLE M.04.03– 3: SUPERPAVE MASTER RANGE FOR BITUMINOUS CONCRETE MIXTURE PRODUCTION

Notes: (1) 300°F minimum after October 15. (2) Minimum Pb as specified in Table M.04.03-5 (3) Control point range is also defined as the master range for that mix. (4) JMF tolerances shall be defined as the limits for production compliance. (5) For WMA, lower minimum aggregate temperature will require Engineer's approval. (6) For WMA and/or polymer modified asphalt, the mix temperature shall meet manufacturer's recommendations. In addition, for WMA, the maximum mix temperature shall not exceed 325°F once the WMA technology is incorporated.

	S0.25		**S0.375**		**S0.5**		**S1**		**Tolerances**
Sieve	CONTROL POINTS (4)		CONTROL POINTS (4)		CONTROL POINTS (4)		CONTROL POINTS (4)		**JMF Limits** (4)
inches	Min(%)	Max(%)	Min(%)	Max(%)	Min(%)	Max(%)	Min(%)	Max(%)	±Tol
2.0	-	-	-	-	-	-	-	-	
1.5	-	-	-	-	-	-	100	-	
1.0	-	-	-	-	-	-	90	100	
3/4	-	-	-	-	100	-	-	90	
1/2	100	-	100	-	90	100	-	-	
3/8	97	100	90	100	-	90	-	-	
#4	-	90	-	90	-	-	-	-	
#8	32	67	32	67	28	58	19	45	
#16	-	-	-	-	-	-	-	-	
#200	2.0	10.0	2.0	10.0	2.0	10.0	1.0	7.0	
Pb(2)	-	-	-	-	-	-	-	-	note (2)
VMA (%)	16.0		16.0		15.0		13.0		1.0
VA (%)	4.0		4.0		4.0		4.0		1.0
Gmm	JMF value		JMF value		JMF value		JMF value		0.030
Agg. Temp (5)	280 – 350F		280 – 350F		280 – 350F		280 – 350F		
Mix Temp (6)	265 – 325 F (1)		265 – 325 F (1)		265 – 325 F (1)		265 – 325 F (1)		
Prod. TSR	N/A		N/A		≥80%		N/A		
T-283 Stripping	N/A		N/A		Minimal as determined by the Engineer		N/A		

TABLE M.04.03– 4: SUPERPAVE MASTER RANGE FOR TRAFFIC LEVELS AND DESIGN VOLUMETRIC PROPERTIES.

Traffic Level	Design ESALs	Number of Gyrations by Superpave Gyratory Compactor	
	(million)	Nini	Ndes
1*	< 0.3	6	50
2	0.3 to < 3.0	7	75
3	≥3.0	8	100

*** NOTE: Level 1 for use by Towns and Municipalities ONLY.**

TABLE M.04.03– 5: SUPERPAVE MINIMUM BINDER CONTENT BY MIX TYPE & LEVEL.

Mix Type	Level	Binder Content Minimum (1)
S0.25	1*	5.6
S0.25	2	5.5
S0.25	3	5.4
S0.375	1*	5.6
S0.375	2	5.5
S0.375	3	5.4
S0.5	1*	5.0
S0.5	2	4.9
S0.5	3	4.8
S1	1*	4.6
S1	2	4.5
S1	3	4.4

*** NOTE: Level 1 for use by Towns and Municipalities ONLY.**

Table M.04.03-6:
Modifications to Standard AASHTO and ASTM Test Specifications and Procedures.

AASHTO Standard Specification	
Reference	**Modification**
M 320	1. Mass change for PG 64-22 shall be a maximum loss of 0.5% when tested in accordance with AASHTO T 240. 2. The two bottles used for the mass change determination may be re-heated and used for further testing.
AASHTO Standard Methods of Test	
Reference	**Modification**
T 27	Section 7.7 Samples are not washed
T 30	Section 6.2 thru 6.5 Samples are not routinely washed
T 168	Samples are taken at one point in the pile. All types of bituminous concrete except Class 4 are scooped from the sample container instead of remixing and quartering. (Method verified by laboratory study). Samples from a hauling vehicle are taken from only one point instead of three as specified. Selection of Samples: Sampling is equally important as the testing, and the sampler shall use every precaution to obtain samples that are truly representative of the bituminous mixture. Box Samples: In order to enhance the rate of processing samples taken in the field by construction or maintenance personnel the samples will be tested in the order received and data processed to be determine conformance to material specifications and to prioritize inspections by laboratory personnel.
T 195	Section 4.3 only one truck load of mixture is sampled. Samples are taken from opposite sides of the load.
T 209	Article 9.5.1 Bowl is suspended 2 minutes prior to reading rather than 10 minutes. This makes no significant difference in results. Section 7.2 The average of two bowls is used proportionally in order to satisfy minimum mass requirements. 8.3 Omit Pycnometer method.
T 245	Article 3.3.2 A compacting temperature of 140 to 146°C (284 to 295°F) is used Article 3.5.2 Seventy-five (75) blows per side are used on Classes 1 and 12, per ConnDOT design requirements Section 3.1 for production testing: one specimen is molded for each extraction test for production over 275 metric tons/day (300 tons/day). Other mixtures: two specimens per extraction test.
T 283	When foaming technology is used, the material used for the fabrication of the specimens shall be cooled to room temperature, and then reheated to the manufactures recommended compaction temperature prior to fabrication of the specimens.
T 308	In addition to the standard testing procedure, the Department has adopted a procedure that addresses a correction factor that is calculated using the composite aggregate percentages (**C**omposite **A**ggregate **C**orrection **F**actor **M**ethod **(CACF)**). The aggregate is burned in compliance with the standard AASHTO procedure Method A exclusively. All modifications are listed for this method only.

AASHTO Standard Specification	
Reference	**Modification**
	A2.2 and A2.3 Omit A2.4 Omit. Replace with: Determine an aggregate gradation for each aggregate component "blank" in accordance with T30. A2.5 Omit. Replace with: The individual aggregate samples are to be dried in an oven at a maximum temperature of 148 ± 5ºC (300 ± 9º F) to a constant weight. RAP samples are to be oven dried at a maximum temperature of 110 ± 5ºC (230 ± 9º F) to a constant weight. RAP samples will be burned for total binder content only and not to arrive at a correction factor for a mixture. A2.6 and A2.7 and A2.8 Omit. A2.8.1 Omit Note 2 A2.9 Omit. Replace with: Perform a gradation analysis on the residual aggregate in accordance with T30 and compare it to the gradation performed prior to burning. A2.9.1 and A2.9.2 Omit The correction factors for each size aggregate are provided by the Trade Contractor to the Engineer prior to the Annual Plant Inspection. The Engineer may verify the correction factors. The Composite Aggregate Correction Factor (CACF) for any mixture may be calculated by summing the result of the correction factor for each individual aggregate multiplied by the percentage of that aggregate in the overall mixture. (Note: All correction factors must be re-calculated every time the percentage of any aggregate changes within the mixture.) If the average corrected Pb content from the ignition oven differs by 0.3% or more from the average bituminous concrete facility production weigh ticket in five (5) consecutive tests regardless of the production date (moving average), the Trade Contractor shall immediately investigate, determine an assignable cause and correct the issue. When two consecutive moving average differences are 0.3% or more, the Engineer may require a new correction factor calculation for all the aggregate components in the mix. In addition to the standard testing procedure, the Department has adopted a procedure that addresses the time involved between sampling the hot-mix asphalt specimen and the beginning of the test. 6.3 Omit. Replace with: The test specimen must be ready to be placed in an approved ignition furnace for testing within ten minutes of being obtained from the hauling vehicle and the test shall start immediately after.
T 331	6.1 Cores are dried to a constant mass prior to testing using a core-dry machine.

AASHTO Standard Recommended Practices	
Reference	**Modification**
R 35	**<u>Volumetric Calculations of VMA and Correction Factor</u>** VMA_a - Voids in Mineral Aggregate from (Va + Vbe) the mix: A. VMA calculated from the mix shall be determined in accordance with *Formula 5.16.1A*. It can be correlated that the VMA calculated from AASHTO R-35 is equivalent to VMA_a when the Pb_a x (100-Pb_t) / 100 is known and substituted for A_{cf}, as shown in *Formula 5.16.1A (ii)*. Test results from VMA_a shall therefore be required to meet all trade contract specifications. Values of VMA_a that are out of specifications during production may be cause for the trade contractor to determine assignable reason, take corrective action, and modify the Job Mix Formula (JMF), as needed. Continued VMA_a data that is out of specifications may be cause for the Engineer to order cessation of supply. *Formula 5.16.1A*. Determining the VMA of bituminous concrete by the mix or air voids & effective binder method: $$VMA_a = V_a + \left[\frac{(Gmb_d \times (Pb_t - A_{cf})}{G_b} \right]$$ Where: VMA_a = VMA calculated from plant production mix(V_a + Vb_e) Gmb_d = Bulk specific gravity as determined by AASHTO T 166(M) Pb_t = Total Binder Content (corrected) by AASHTO T 308(M) A_{cf} = Absorption correction factor provided by Trade Contractor (refer to B. i and ii) B. Determining the bituminous concrete mix binder correction factor for each class by use of percent absorption of water by AASHTO T 84/85, AASHTO M 323 and D_f method. This value shall be performed by the Trade Contractor during the mix design only and submitted as a JMF value. Two methods for determining the A_{cf} are shown, although method (i) will be the desired method to be used. Both methods are equivalent when the Gsa, Gsb and Pwa are recent and valid for the mix. *i.* $A_{cf} = Df \times Pwa \text{ x } (100 - Pb_t) / 100$ *ii.* $A_{cf} = (Pb_a \text{ from annual JMF submittal}) \text{ x } (100 - Pb_t) / 100$ Where: Df = as determined by Formula 5.16.1B. Pwa = as determined by AASHTO T 84/85 Pb_a = as determined by AASHTO M 323 (from annual JMF submittal) D_f (Density Factor): The Trade Contractor shall calculate the bituminous concrete

AASHTO Standard Recommended Practices	
Reference	**Modification**
	mix design D_f (*derived from formula X1.2 APPENDIX X1 of AASHTO R 35)* for each class of material, in accordance with *Formula 5.16.1B*. *Formula 5.16.1B*. Determining the Density Factor *(D_f)* of mix design bituminous concrete: $$D_f = \left(\frac{Gse - Gsb}{Gsa - Gsb}\right)$$ Where: D_f = Density Factor or multiplier determined by AASHTO R-35(M) Gse = Effective Specific Gravity determined by AASHTO M-323 at plant Gsa = Apparent Specific Gravity determined by AASHTO T 84/85 of mix design Gsb = Bulk Specific Gravity determined by AASHTO T 84/85 of mix design
R 26	Quality Control Plans must be formatted in accordance with AASHTO R 26, certifying suppliers of performance-graded asphalt binders, Section 9.0, Suppliers Quality Control Plan, and "NEAUPG Model PGAB QC Plan." 1. The Department requires that all laboratory technician(s) responsible for testing PG-binders be certified or Interim Qualified by the New England Transportation Technician Certification Program (NETTCP) as a PG Asphalt Binder Lab Technician. 2. Sampling of asphalt binders should be done under the supervision of qualified technician. NECTP "Manual of Practice," Chapter 2 Page 2-4 (Key Issues 1-8). 3. A copy of the Manual of Practice for testing asphalt binders in accordance with the Superpave PG Grading system shall be in the testing laboratory. 4. All laboratories testing binders for the Department are required to be accredited by the AASHTO Materials Reference Laboratory (AMRL). 5. Sources interested in being approved to supply PG-binders to the Department by use of an "in-line blending system," must record properties of blended material, and additives used. 6. Each source of supply of PG-binder must indicate that the binders contain no additives used to modify or enhance their performance properties. Binders that are manufactured using additives, modifiers, extenders etc., shall disclose the type of additive, percentage and any handling specifications/limitations required. Suppliers shall provide AASHTO M-320 Table 2 testing at a minimum of once per month on one sample of material. Each supplier shall rotate the PG grade each month (including polymer-modified asphalt (PMA)), so that data can be collected for all the grades produced.

PART 3 EXECUTION

3.1 CONSTRUCTION

A. Material Documentation: All vendors producing bituminous concrete must have their truck-weighing scales, storage scales, and mixing plant automated to provide a detailed ticket.

Delivery tickets must include the following information:

a. State of Connecticut printed on ticket.

b. Name of producer, identification of plant, and specific storage bin (silo) if used.

c. Date and time of day.

d. Mixture Designation If RAP is used, the plant printouts shall include RAP dry weight, percentage and daily moisture content. If WMA technology is used, the technology and the additive rate or the water injection rate must be noted on the ticket. Class 3 mixtures for machine-placed curbing must state "curb mix only".

e. Net weight of mixture loaded into truck (When RAP is used, RAP moisture shall be excluded from mixture net weight).

f. Gross weight (Either equal to the net weight plus the tare weight or the loaded scale weight).

g. Tare weight of truck – Daily scale weight.

h. Project number, purchase order number, name of Trade Contractor (if Trade Contractor other than Producer).

i. Truck number for specific identification of truck.

j. Individual aggregate, RAP, and virgin asphalt high/target/low weights shall be printed on batch plant tickets (For drum plants and silo loadings, the plant printouts shall be printed out at 5 minute intervals maintained by the vendor for a period of three years after the completion of the project).

k. For every mixture designation the running daily total delivered and sequential load number.

The net weight of mixture loaded into the truck must be equal to the cumulative measured weight of its components.

The Trade Contractor must notify the Engineer immediately if, during the production day, there is a malfunction of the weighing or recording system in the automated plant or truck-weighing scales. Manually written tickets containing all required information will be allowed for one hour, but for no longer, provided that each load is weighed on State-approved scales. At the Engineer’s sole discretion, trucks may be approved to leave the plant if a State inspector is present to monitor weighing. If such a malfunction is not fixed within forty-eight hours, mixture will not be approved to leave the plant until the system is fixed to the Engineer's satisfaction. No damages will be considered should the State be unable to provide an inspector at the plant.

The State reserves the right to have an inspector present to monitor batching and /or weighing operations.

B. Transportation of Mixture: Trucks with loads of bituminous concrete being delivered to State projects must not exceed the statutory or permitted load limits referred to as gross vehicle weight (GVW). The Trade Contractor shall furnish a list of all vehicles and allowable weights transporting mixture.

The State reserves the right to check the gross and tare weight of any delivery truck. A variation of 0.4 percent or less in the gross or tare weight shown on the delivery ticket and the certified scale weight shall be considered evidence that the weight shown on the delivery ticket is correct. If the gross or tare weight varies from that shown on the delivery ticket by more than 0.4 percent, the Engineer will recalculate the net weight. The Trade Contractor shall take action to correct discrepancy to the satisfaction of the Engineer.

The mixture shall be transported from the mixing plant in trucks that have previously been cleaned of all foreign material and that have no gaps through which mixture might inadvertently escape. The Trade Contractor shall take care in loading trucks uniformly so that segregation is minimized. Loaded trucks shall be tightly covered with waterproof covers acceptable to the Engineer. Mesh covers are prohibited. The front and rear of the cover must be fastened to minimize air infiltration. The Trade Contractor shall assure that all trucks are in conformance with this specification. Trucks found not to be in conformance shall not be allowed to be loaded until re-inspected to the satisfaction of the Engineer.

Truck body coating and cleaning agents must not have a deleterious effect on the transported mixture. The use of solvents or fuel oil, in any concentration, is strictly prohibited for the coating of the inside of truck bodies. When acceptable coating or agents are applied, truck bodies shall be raised immediately prior to loading to remove any excess agent in an environmentally acceptable manner.

C. Paving Equipment: The Trade Contractor shall have the necessary paving and compaction equipment at the project site to perform the work. All equipment shall be in good working order and any equipment that is worn, defective or inadequate for performance of the work shall be repaired or replaced by the Trade Contractor to the satisfaction of the Engineer. During the paving operation, the use of solvents or fuel oil, in any concentration, is strictly prohibited as a release agent or cleaner on any paving equipment (i.e., rollers, pavers, transfer devices, etc.).

Refueling of equipment is prohibited in any location on the paving project where fuel might come in contact with bituminous concrete mixtures already placed or to be placed. Solvents for use in cleaning mechanical equipment or hand tools shall be stored clear of areas paved or to be paved. Before any such equipment and tools are cleaned, they shall be moved off the paved or to be paved area; and they shall not be returned for use until after they have been allowed to dry.

<u>Pavers</u>: Each paver shall have a receiving hopper with sufficient capacity to provide for a uniform spreading operation and a distribution system that places the mix uniformly, without segregation. The paver shall be equipped with and use a vibratory screed system with heaters or burners. The screed system shall be capable of producing a finished surface of the required evenness and texture without tearing, shoving, or gouging the mixture. Pavers with extendible screed units as part of the system shall have auger extensions and tunnel extenders as necessary. Automatic screed controls for grade and slope shall be used at all times unless otherwise authorized by the Engineer. The controls shall automatically adjust the screed to compensate for irregularities in the preceding course or existing base. The controls shall

maintain the proper transverse slope and be readily adjustable, and shall operate from a fixed or moving reference such as a grade wire or floating beam.

Rollers: All rollers shall be self-propelled and designed for compaction of bituminous concrete. Rollers types shall include steel-wheeled, pneumatic or a combination thereof and may be capable of operating in a static or dynamic mode. Rollers that operate in a dynamic mode shall have drums that use a vibratory or oscillatory system or combination of. The vibratory system achieves compaction through vertical amplitude forces. Rollers with this system shall be equipped with indicators that provide the operator with amplitude, frequency and speed settings/readouts to measure the impacts per foot during the compaction process. The oscillatory system achieves compaction through horizontal shear forces. Rollers with this system shall be equipped with frequency indicators. Rollers can operate in the dynamic mode using the oscillatory system on concrete structures such as bridges and catch basins if at the lowest frequency setting.

Pneumatic tire rollers shall be self-propelled and equipped with wide-tread compaction tires capable of exerting an average contact pressure from 60 to 90 pounds per square inch uniformly over the surface, adjusting ballast and tire inflation pressure as required. The Trade Contractor shall furnish evidence regarding tire size; pressure and loading to confirm that the proper contact pressure is being developed and that the loading and contact pressure are uniform for all wheels.

Lighting: For paving operations, which will be performed during hours of darkness, the paving equipment shall be equipped with lighting fixtures as described below, or with approved lighting fixtures of equivalent light output characteristics. A sufficient number of spare lamps shall be available on site as replacements in the event of failures. The Trade Contractor shall provide brackets and hardware for mounting light fixtures and generators to suit the configuration of the rollers and pavers. Mounting brackets and hardware shall provide for secure connection of the fixtures, minimize vibration, and allow for adjustable positioning and aiming of the light fixtures. Lighting shall be aimed to maximize the illumination on each task and minimize glare to passing traffic. The Trade Contractor shall provide generators on rollers and pavers of the type, size, and wattage, to adequately furnish 120 V AC of electric power to operate the specified lighting equipment. A sufficient amount of fuel shall be available on site. There shall be switches to control the lights. Wiring shall be weatherproof and installed to all applicable codes. The minimum lighting requirements are found in tables 4.06-1 and 4.06-2:

Table 4.06-1: Paver Lighting

Fixture	Quantity	Remarks
Type A	3	Mount over screed area
Type B (narrow) or Type C (spot)	2	Aim to auger and guideline
Type B (wide) or Type C (flood)	2	Aim 25 feet behind paving machine

Table 4.06-2: Roller Lighting

Fixture*	Quantity	Remarks
Type B (wide)	2	Aim 50 feet in front of and behind roller
Type B (narrow)	2	Aim 100 feet in front of and behind roller
OR		
Type C (flood)	2	Aim 50 feet in front of and behind roller
Type C (spot)	2	Aim 100 feet in front of and behind roller

*All fixtures shall be mounted above the roller.

Type A: Fluorescent fixture shall be heavy-duty industrial type. It shall be enclosed and sealed to keep out dirt and dampness. It shall be UL listed as suitable for wet locations. The fixture shall contain two 4-foot long lamps - Type "F48T12CWHO". The integral ballast shall be a high power factor, cold weather ballast, and 120 volts for 800 MA HO lamps. The housing shall be aluminum, and the lens shall be acrylic with the lens frame secured to the housing by hinging latches. The fixture shall be horizontal surface mounting, and be made for continuous row installation.

Type B: The floodlight fixture shall be heavy-duty cast aluminum housing, full swivel and tilt mounting, tempered-glass lens, sealed door, reflector to provide a wide distribution or narrow distribution as required, mogul lamp socket for 250 watt Metal Halide lamp, 120 volt integral ballast, and be UL listed as suitable for wet locations.

Type C: The power beam holder shall have ribbed die cast aluminum housing and a clear tempered-glass lens to enclose the fixture. There shall be an arm fully adjustable for aiming, with a male-threaded mount with serrated teeth and lock nuts. There shall be a 120-volt heatproof socket with extended fixture wiring for an "Extended Mogul End Prong" lamp base. The fixture shall have gaskets, and shall be UL listed as suitable for wet locations. The lamps shall be 1000-watt quartz PAR64, both Q1000PAR64MFL (flood) and Q1000PARNSP (spot) will be required.

Material Transfer Vehicle (MTV): A MTV shall be used when placing a bituminous concrete surface course as indicated in the contract documents. A surface course is defined as the total thickness of the same bituminous concrete mix that extends up to and includes the final wearing surface whether it is placed in a single or multiple lifts, and regardless of any time delays between lifts.

The MTV must be a self-propelled vehicle specifically designed for the purpose of delivering the bituminous concrete mixture from the delivery truck to the paver. The MTV must have the capability to remix the bituminous concrete mixture.

The use of a MTV will be subject to the requirements stated in Section 01 11 00 - Load Restrictions. The Engineer may limit the use of the vehicle if it is determined that the use of the MTV may damage highway components, utilities, or bridges. The Trade Contractor shall submit to the Engineer at time of pre-construction the following information:

- The make and model of the MTV to be used.
- The individual axle weights and axle spacing for each separate piece of paving equipment (haul vehicle, MTV and paver).
- A working drawing showing the axle spacing in combination with all three pieces of equipment that will comprise the paving echelon.

D. Seasonal Requirements: Paving, including placement of temporary pavements, shall be divided into two seasons, In-Season and Extended Season. In-Season paving shall occur from May 1 – October 14, and Extended Season shall occur from October 15- April 30. The following requirements shall apply unless otherwise authorized or directed by the Engineer:
   - Bituminous concrete mixes shall not be placed when the air or subbase temperature is below 40°F regardless of the season.
   - Should paving operations be scheduled during the Extended Season, the Trade Contractor's Quality Control Plan for placement described in Section 9. "Trade Contractor Quality Control Plan for Placement" shall include a separate section titled "Extended Season Paving" and address minimum delivered mix temperature, maximum paver speed, enhanced rolling patterns and the method to balance mixture delivery and placement operations. Work covered by the section on Extended Season paving shall not commence until the Engineer's comments have been incorporated into the section and approved.
   - Should placement of the final lift of bituminous concrete be scheduled during the Extended Season, the Trade Contractor is required to submit this plan to the Engineer for review 30 days prior to the paving operation.

E. Superpave Test Section: The Engineer may require the Trade Contractor to place a test section whenever the requirements of this specification are not met.

   The Trade Contractor shall submit the quantity of mixture to be placed and the location of the test section for review and acceptance by the Engineer. The equipment used in the construction of a passing test section shall be used throughout production.

   If a test section fails to meet specifications, the Trade Contractor shall stop production, make necessary adjustments to the job mix formula, plant operations, or procedures for placement and compaction. The Trade Contractor shall construct test sections, as allowed by the Engineer, until all the required specifications are met. All test sections shall also be subject to removal as directed by the CTDOT PM.

F. Transitions for Roadway Surface: Transitions shall be formed at any point on the roadway where the pavement surface deviates, vertically, from the uniform longitudinal profile as specified on the plans. Whether formed by milling or by bituminous concrete mixture, all transition lengths shall conform to the criteria below unless otherwise specified.

   <u>Permanent Transitions</u>: A permanent transition is defined as any transition that remains as a permanent part of the work. All permanent transitions, leading and trailing ends shall meet the following length requirements:

   a) Posted speed limit is greater than 35 MPH: 30 feet per inch of vertical change (thickness)
   b) Posted speed limit is 35 MPH or less: 15 feet per inch of vertical change (thickness).
   c) Bridge Overpass and underpass transition length will be 75 feet either
      (1) Before and after the bridge expansion joint, or
      (2) Before or after the parapet face of the overpass.

   In areas where it is impractical to use the above described permanent transition lengths the use of a shorter permanent transition length may be permitted when approved by the Engineer.

Temporary Transitions: A temporary transition is defined as a transition that does not remain a permanent part of the work. All temporary transitions shall meet the following length requirements:

a) Posted speed limit is greater than 35 MPH
   (1) Leading Transitions = 15 feet per inch of vertical change (thickness)
   (2) Trailing Transitions = 6 feet per inch of vertical change (thickness)

b) Posted speed limit is 35 MPH or less
   (1) Leading and Trailing = 4 feet per inch of vertical change (thickness)

Note: Any temporary transition to be in-place over the winter shutdown period, holidays, or during extended periods of inactivity (more than 7 calendar days) shall conform to the "Permanent Transition" requirements shown above.

G. Spreading and Finishing of Mixture: Prior to the placement of the bituminous concrete, the underlying base course shall be brought to the plan grade and cross section within the allowable tolerance. Immediately before placing the mixture, the area to be surfaced shall be cleaned by sweeping or by other means acceptable to the Engineer. The bituminous concrete mixture shall not be placed whenever the surface is wet or frozen. The Engineer will verify the mix temperature by means of a probe or infrared type of thermometer. A probe type thermometer, verified by the Department on an annual basis, must be used in order to reject a load of mixture based on temperatures outside the range stated in the placement QC plan.

Placement: The bituminous concrete mixture shall be placed and compacted to provide a smooth, dense surface with a uniform texture and no segregation at the specified thickness and dimensions indicated in the plans and specifications.

When unforeseen weather conditions prevent further placement of the mix, the Engineer is not obligated to accept or place the bituminous concrete mixture that is in transit from the plant.

In advance of paving, traffic control requirements shall be set up daily, maintained throughout placement, and shall not be removed until all associated work including density testing is completed.

The Trade Contractor shall inspect the newly placed pavement for defects in the mixture or placement before rolling is started. Any deviation from standard crown or section shall be immediately remedied by placing additional mixture or removing surplus mixture. Such defects shall be corrected to the satisfaction of the Engineer.

Where it is impractical due to physical limitations to operate the paving equipment, the Engineer may permit the use of other methods or equipment. Where hand spreading is permitted, the mixture shall be placed by means of suitable shovels and other tools, and in a uniformly loose layer at a thickness that will result in a completed pavement meeting the designed grade and elevation.

Placement Tolerances: Each lift of bituminous concrete placed at a uniform specified thickness shall meet the following requirements for thickness and area. Any pavement exceeding these limits shall be subject to an adjustment or removal as directed by the CTDOT PM. Lift tolerances will not relieve the Trade Contractor from meeting the final designed grade. Lifts of specified non-uniform thickness, i.e. wedge or shim course, shall not be subject to thickness and area adjustments as directed by the CTDOT PM.

a) Thickness- Where the total thickness of the lift of mixture exceeds that shown on the plans beyond the tolerances shown in Table 4.06-3, the longitudinal limits of such variation including locations and intervals of the measurements will be documented by the Engineer.

TABLE 4.06-3 Thickness Tolerances

Mixture Designation	Lift Tolerance
Class 4 and S1	+/- ⅜ inch
Class 1, 2 and 12 and S0.25, S0.375, S0.5	+/- ¼ inch

Where the thickness of the lift of mixture is less than that shown on the plans beyond the tolerances shown in Table 4.06-3, the Trade Contractor, with the approval of the Engineer, shall take corrective action in accordance with this specification and as directed by the Engineer.

b) Area- Where the width of the lift exceeds that shown on the plans by more than the specified thickness of each lift, the longitudinal limits of such variation including locations and intervals of the measurements will be documented by the Engineer.

c) Delivered Weight of Mixture - When the delivery ticket shows that the truck exceeds the allowable gross weight for the vehicle type the quantity of tons representing the overweight amount will be documented by the Engineer.

Transverse Joints: All transverse joints shall be formed by saw-cutting a sufficient distance back from the previous run, existing bituminous concrete pavement or bituminous concrete driveways to expose the full thickness of the lift. A brush of tack coat shall be used on any cold joint immediately prior to additional bituminous concrete mixture being placed.

Tack Coat Application: A thin uniform coating of tack coat shall be applied to the pavement immediately before overlaying and be allowed sufficient time to break (set). All surfaces in contact with the bituminous concrete that have been in place longer than 3 calendar days shall have an application of tack coat. The tack coat shall be applied by a non-gravity pressurized spray system that results in uniform overlapping coverage at an application rate of 0.03 to 0.05 gallons per square yard for a non-milled surface and an application rate of 0.05 to 0.07 gallons per square yard for a milled surface. For areas where both milled and un-milled surfaces occur, the tack coat shall be an application rate of 0.03 to 0.05 gallons per square yard. The Engineer must approve the equipment and the method of measurement prior to use. The material for tack coat shall not be heated in excess of 160°F and shall not be further diluted.

Compaction: The Trade Contractor shall compact the mixture to meet the density requirements as stated in Sub-article 3.1 and eliminate all roller marks without displacement, shoving, cracking, or aggregate breakage.

The Trade Contractor shall only operate rollers in the dynamic mode using the oscillatory system at the lowest frequency setting on concrete structures such as bridges and catch basins. The use of the vibratory system on concrete structures is prohibited. Rollers operating in the dynamic mode shall be shut off when reversing directions.

If the Engineer determines that the use of compaction equipment in the dynamic vibratory mode may damage highway components, utilities, or adjacent property, the Trade Contractor shall

provide alternate compaction equipment. The Engineer may allow the Trade Contractor to operate rollers in the dynamic mode using the oscillatory system at the lowest frequency setting.

These allowances will not relieve the Trade Contractor from meeting pavement compaction requirements.

Surface Requirements: The pavement surface of any lift shall meet the following requirements for smoothness and uniformity. Any irregularity of the surface exceeding these requirements shall be corrected by the Trade Contractor.

a) Smoothness- Each lift of the surface course shall not vary more than ¼ inch from a Trade Contractor-supplied 10 foot straightedge. For all other lifts of bituminous concrete, the tolerance shall be ⅜ inch. Such tolerance will apply to all paved areas.

b) Uniformity- The paved surface shall not exhibit segregation, rutting, cracking, disintegration, flushing or vary in composition as determined by the Engineer.

H. Longitudinal Joint Construction Methods: Unless noted on the plans or the contract documents or directed by the Engineer, the Trade Contractor shall use Method I- Notched Wedge Joint (see figure 4.06-1) when constructing longitudinal joints where lift thicknesses are between 1½ and 3 inches, except for S1 and Class 4 mixes. Method II Butt Joint (see figure 4.06-2) shall be used for lifts less than 1½ inches or greater than 3 inches, and S1 and Class 4 mixes. During placement of multiple lifts of bituminous concrete, the longitudinal joint shall be constructed in such a manner that it is located at least 6 inches from the joint in the lift immediately below. The joint in the final lift shall be at the centerline or at lane lines. Each longitudinal joint shall maintain a consistent offset from the centerline of the roadway along its entire length.

Method I - Notched Wedge Joint:

Figure 4.06-1

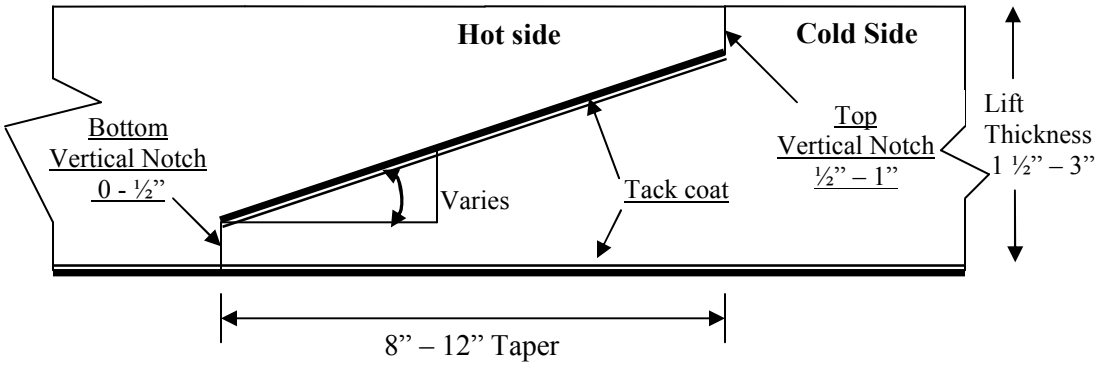

A notched wedge joint shall be constructed, as shown in the figure using a device that is capable of adjusting the top and bottom vertical notches independently and is attached to the paver screed.
The taper portion of the joint must be placed over the longitudinal joint in the lift immediately below. The top vertical notch must be located at the centerline or lane line in the final lift. The requirement for paving full width "curb to curb" as described in Method II may be waived if addressed in the QC plan and approved by the Engineer.

The taper portion of the wedge joint shall be compacted and not be exposed to traffic for more than 5 calendar days.

The pavement surface under the wedge joint must have an application of tack coat material. Prior to placing the completing pass (hot side), an application of tack coat must be applied to the exposed surface of the tapered section; regardless of time elapsed between paver passes. The in-place time allowance described in Sub article 3.1.J does not apply to joint construction.

Any exposed wedge joint must be located to allow for the free draining of water from the road surface.

The Engineer reserves the right to define the paving limits when using a wedge joint that will be exposed to traffic.

<u>Method II - Butt Joint</u>:

Figure 4.06-2

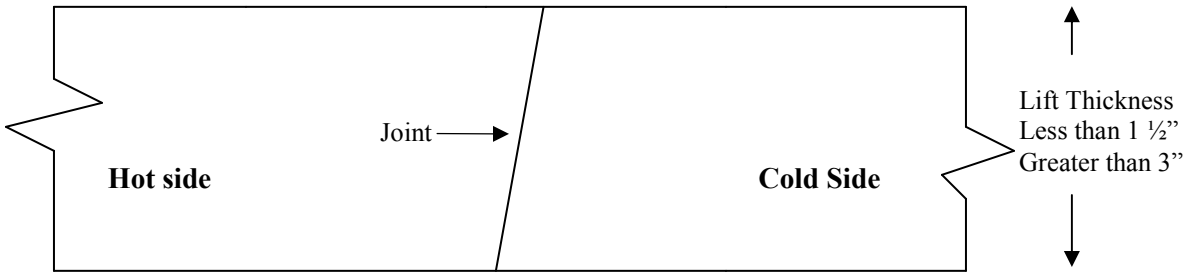

When adjoining passes are placed, the Trade Contractor shall utilize equipment that creates a near vertical edge (refer to figure). The completing pass (hot side) shall have sufficient mixture so that the compacted thickness is not less than the previous pass (cold side). The end gate on the paver should be set so there is an overlap onto the cold side of the joint.

The Trade Contractor shall not allow any butt joint to be incomplete at the end of a work shift unless otherwise allowed by the Engineer. When using this method, the Trade Contractor is not allowed to leave a vertical edge exposed at the end of a work shift and must complete paving of the roadway full width "curb to curb."

<u>Method III- Butt Joint with Hot Poured Rubberized Asphalt Treatment</u>: When required by the trade contract or allowed by the Engineer, Method III (see figure 4.06-3) may be used.

Figure 4.06-3

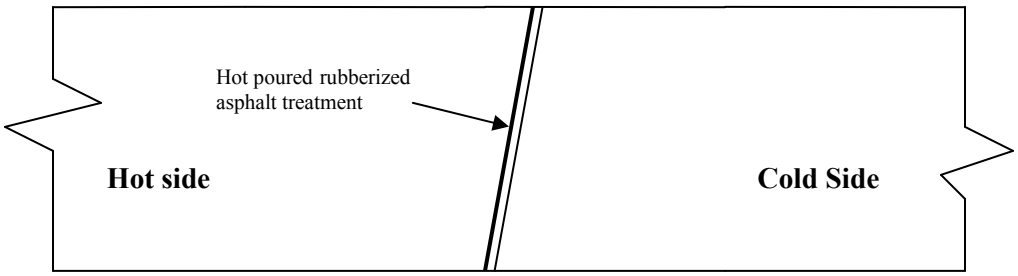

All of the requirements of Method II must be met with Method III. In addition, the longitudinal vertical edge must be treated with a joint seal material meeting the requirements of these specifications prior to placing a completing pass. The joint seal material shall be applied in accordance with the manufacturer's recommendation so as to provide a uniform coverage and avoid excess bleeding onto the newly placed pavement.

I. Corrective Work Procedures: Any portion of the completed pavement that does not meet the requirements of the specification shall be corrected at the expense of the Trade Contractor. Any corrective courses placed as the final wearing surface shall not be less than 1½ inches in thickness after compaction.

If pavement placed by the Trade Contractor does not meet the specifications, and the Engineer requires its replacement or correction, the Trade Contractor shall:

a) Propose a corrective procedure to the Engineer for review and approval prior to any corrective work commencing. The proposal shall include:

- Limits of pavement to be replaced or corrected, indicating stationing or other landmarks that are readily distinguishable.
- Proposed work schedule.
- Construction method and sequence of operations.
- Methods of maintenance and protection of traffic.
- Material sources.
- Names and telephone numbers of supervising personnel.

b) Perform all corrective work in accordance with the Trade Contract and the approved corrective procedure.

J. Protection of the Work**:** The Trade Contractor shall protect all sections of the newly finished pavement from damage that may occur as a result of the Trade Contractor's operations for the duration of the Project. Prior to the Engineer's authorization to open the pavement to traffic, the Trade Contractor is responsible to protect the pavement from damage.

K. Cut Bituminous Concrete Pavement: Work under this item shall consist of making a straight-line cut in the bituminous concrete pavement to the lines delineated on the plans or as directed by the Engineer. The cut shall provide a straight, clean, vertical face with no cracking, tearing or breakage along the cut edge.

END OF SECTION 32 12 16

SECTION 32 16 13.13 – CAST-IN-PLACE CONCRETE CURBS AND GUTTERS

PART 1 GENERAL

1.1 SECTION INCLUDES

A. Construction of concrete curbing on the prepared subbase in accordance with the dimensions and details shown on the plans or as ordered and in conformity with these specifications.

1.2 SUBMITTALS

A. See Section 01 33 00 – Submittal Procedures and Section 01 33 00.13 – Document Control.

1.3 RELATED REQUIREMENTS

A. See Section 03 30 00 Cast-in –Place Concrete.

B. See Section 31 23 23 Fill.

PART 2 PRODUCTS

2.1 MATERIALS

A. The concrete for cast-in-place or slip formed curbing shall be Class "C" concrete conforming to the requirements of Section 03 30 00 Cast-in-Place Concrete of 4,000 psi and shall contain 5 to 7% entrained air unless otherwise approved by the Engineer. The material for the precast concrete shall conform to Section 03 30 00 Cast-in-Place Concrete, except the coarse aggregate gradation may be varied with the approval of the Engineer.

B. Joint Sealer for Pavement: The joint sealer for pavement shall be a rubber compound of the hot-poured type and shall conform to the requirements of AASHTO M234 Type II unless otherwise noted on the plans or ordered by the Engineer.

C. Joint Filler for Concrete: Expansion joint filler shall be either performed expansion joint filler or wood joint filler as indicated on the plans and shall conform to the following requirements:

1. Preformed expansion joint filler shall be the bituminous cellular type and shall conform to the requirements of AASHTO M213.

2. Boards for wood joint filler shall have 2 planed sides and shall be redwood, cypress or white pine. Redwood and cypress boards shall be of sound heartwood. White pine boards shall be of sound sapwood. Occasional small, sound knots, and medium surface checks will be permitted provided the board is free of any defects that will impair its usefulness for the purpose intended. The point filler may be composed of more than one length of board in the length of the joint, but no board a length less than 6 feet shall be used; and the spate boards shall be held securely to form a straight

joint. Boards composed of pieces that are jointed and glued shall be considered as one board.

3. Dimensions shall be as specified or shown on the plans; and tolerance of plus 1/16-inch thickness, plus 1/8-inch depth and plus 1/4-inch length will be permitted.
4. All wood joint filler boards shall be given a preservative treatment by brushing with a creosote oil conforming to AASHTO M133. After treatment, the boards shall be stacked in pile, each layer separated from the next by spacers at least 1/4-inch thick; and the boards shall not be used until 24 hours after treatment. Prior to concreting, all exposed surfaces of the wood filler shall be given a light brush coating of form oil.
5. Testing of board expansion joint filler shall be in accordance with pertinent sections of AASHTO T42.

PART 3 EXECUTION

3.1 EXAMINATION

A. Verify that construction area for curbs are to the lines and grades indicated on the plans and ready for the Work as indicated.

3.2 PREPARATION

A. Layout the location indicated on the plans for concrete curbing prior to construction.

3.3 CONSTRUCTION

A. Construction methods for concrete curbing shall conform to the requirements of as defined in Section 03 30 00 Cast-in-Place Concrete for site concrete, as supplemented by the following requirements.

B. Excavation: Excavation shall be made to the required depth, and the base upon which the curbing is to be set shall be compacted to a firm, even surface.

C. Placing of Concrete: The concrete shall contain not less than 5% nor more than 7% entrained air at the time the concrete is deposited within the forms. Concrete shall be placed only on a moist base. Concrete shall not be placed on a soft, muddy or frozen base. Slip form equipment may be used if the resulting product conforms with the plans. Precast concrete curbing may be used if the resulting product conforms with the plans except for the length of each curb unit. Precast concrete curbing units shall be constructed in 6-foot or longer lengths for straight sections.

   Where slip form equipment or precast concrete curbing is not used, the concrete shall be placed in forms, struck off with a template, compacted by approved means, and finished to a smooth, even surface. Vibration will not be required.

   The concrete curbing shall be constructed in sections having a uniform length of approximately 10 feet, unless otherwise directed, so arranged that a joint in the curbing shall come opposite a joint in the adjoining concrete pavement slab and be similar to it. The length of these sections

may be varied slightly where necessary for closures, but no section less than 6 feet in length will be permitted. These sections shall be separated by an approved method at the time of placing of the concrete.

D. Forms: Where forms are used, they shall be so constructed that the form for exposed faces may be removed before the concrete has taken final set in order to permit correction of surface irregularities.

E. Curing and Protection: Concrete curbing, except precast curbing, shall be cured and protected in conformity with the requirements of Section 03 30 00 Cast-in-Place Concrete for site concrete. Precast curbing shall not be shipped to the project until the 28-day compressive strength is acquired. Precast curbing that has been damaged shall be removed from the project at the Trade Contractor's expense.

F. Backfilling: After the concrete has set sufficiently, the grading shall be completed to the lines shown on the plans, or as ordered, by refilling to the required elevation with approved material which shall be placed in layers of not over 6 inches in depth and compacted until firm and solid.

END OF SECTION 32 16 13.13

SECTION 32 16 13.43 – STONE CURBS

PART 1 GENERAL

1.1 SECTION INCLUDES

A. Construction of stone curbing on the prepared base in accordance with the dimensions and details shown on the plans or as ordered and in conformity with these specifications.

1.2 SUBMITTALS

A. See Section 01 33 00, Submittal Procedures and Section 01 33 00.13 – Document Control.

1.3 RELATED REQUIREMENTS

A. Section 04 05 11 Masonry Mortaring and Grouting, for mortar requirements.

B. Section 31 23 23 Fill, for fill requirements

C. Section 32 11 23 Aggregate Base Courses.

PART 2 PRODUCTS

2.1 MATERIALS

A. The materials for this work shall conform to the following requirements:

Granite Curbing: Stone for this work shall be hard and durable granite, fundamentally of light color, of general uniform texture, of smooth splitting appearance, free from seams or imperfections that would impair its structural reliability and containing only such color variations as in the opinion of the Engineer would reasonably be characteristic of the material source. The Trade Contractor shall submit for approval, the name of the quarry and the type of curb which the Trade Contractor proposes to use. Samples of curbing shall be submitted for approval only when requested by the Engineer. Such submission shall be made sufficiently in advance of ordering so that the Engineer may have an opportunity to judge the stone, both as to quality and appearance. No stone from any other quarry shall be used unless it has been properly approved.

The finish and surface dimensions for the curb shall conform to the following requirements:

1. The curbstone shall have a top surface free from wind; it shall be pointed, peen-hammered or sawed to an approximately true plane, and shall have no projections or depressions greater than 1/8 inch. The front and back arris lines shall be pitched straight and true.

2. On the back surface of the curbstone there shall be no projection for 3 inches down from the top which would fall outside of a plane having a batter of 4 inches in 12 inches from the back arris line.

3. The front face shall be at right angles to the plane of the top and shall be smooth quarry-split, free from drill holes in the exposed face. There shall be no projections greater than 3/4 inch, or depressions greater than 1/2 inch, measured from the vertical plane of the face through the top arris line for a distance of 8 inches down from the top. For the remaining distance, there shall be no projections or depressions greater than 1 inch measured in the same manner. The arris lines at the ends shall be pitched with no variation from the plane of the face greater than 1/8 inch.

4. The ends of all stones shall be square with the planes of the top and face and so finished that, when the stones are placed end to end as closely as possible, no space more than 1/2 inch shall show in the joint for the full width of the top or down on the face for 8 inches. On curbstones having a length of 6 feet or more, the remainder of the end may break back not over 9 inches; whereas, on shorter curbstones, they shall not break back more than 6 inches.

5. If sawed, the curbstones shall be thoroughly cleaned of any iron rust or iron particles.

6. For straight curbing, 80% of the stones shall be furnished in lengths of not less than 6 feet, and the remaining 20% in lengths of not less than 4 feet, interspersed at random, to allow for closures.

7. Curbstones to be set on a radius of 100 feet or less shall be cut to the curve required, and their ends shall be cut on radial lines. Requirements for length of individual stones in curved curbing vary with radii of curves.

8. Dowel Bar Mechanical Connections: Dowel bar mechanical connections shall develop in tension and compression at least 125 percent of the specified yield strength of the bar reinforcement being spliced. Epoxy coated mechanical connectors shall be epoxy coated in accordance with the requirements of ASTM D 3963/.

   Galvanized mechanical connectors shall be galvanized, after fabrication, in accordance with the requirements of ASTM A 767/, Class 1, including supplemental requirements.

   Prior to incorporation into the work, samples of the uncoated, epoxy coated and galvanized dowel bar mechanical connections shall be submitted to the Engineer for destructive testing. One sample, complete with all the components, shall be submitted for each size, type and manufacturer of the dowel bar mechanical connections.

9. Mortar: Mortar shall conform to section 04 05 11 for site work mortar.

PART 3 EXECUTION

3.1 EXAMINATION

A. Verify that construction area for curbs are to the lines and grades indicated on the plans and ready for the Work as indicated.

3.2 PREPARATION

A. Layout the location indicated on the plans for stone curbing prior to construction.

3.3 CONSTRUCTION

A. Excavation: Excavation shall be made to the bottom of the 6-inch granular base below the curbing, the trench being sufficiently wide to permit thorough tamping. The base shall be compacted to a firm, even surface and shall be approved by the Engineer.

B. Installing Stone Curbing: The curbing shall be set on edge and settled into place with a heavy wooden hand-rammer, to the line and grade required, straight and true for the full depth. The joints of the stone curbing shall be pointed with mortar for the full depth of the curbing. At approximately 50-foot intervals, a 1/2-inch joint shall not be filled with mortar but left free for expansion. The ends of the stone curbing at driveways and intersections shall be cut at a bevel or rounded, as directed by the Engineer.

C. Backfilling: The trench for the stone curbing shall be backfilled with approved material; the first layer to be 4 inches in depth, thoroughly rammed; the other layers to be not more than 6 inches in depth and thoroughly rammed until the trench is filled.

D. Openings: Where indicated on the plans, or directed, drainage openings shall be made through the curbing at the elevations and of the size required.

END OF SECTION 32 16 13.43

SECTION 32 16 23.13 – CONCRETE SIDEWALK

PART 1 - GENERAL

1.1 SECTION INCLUDES

A. Concrete sidewalks and concrete driveway ramps constructed on a gravel or reclaimed miscellaneous aggregate base course in the locations and to the dimensions and details shown on the plans or as ordered and in accordance with these specifications.

1.2 SUBMITTALS

A. See Section 01 33 00 – Submittal Procedures and Section 01 33 00.13 – Document Control.

1.3 RELATED REQUIREMENTS

A. Section 03 30 00 Cast-in-Place Concrete, for concrete requirements.

B. Section 31 23 23 Fill, for backfill requirements.

PART 2 - PRODUCTS

2.1 MATERIALS

A. Materials for this work shall conform to the requirements of 03 30 00 Cast-in-Place Concrete Class C concrete..

B. Air-entraining Portland cement and air-entraining admixtures shall conform to Section 03 30 00 Cast-in-Place Concrete.

C. The base shall be compacted granular fill or reclaimed miscellaneous aggregate conforming to Section 31 23 23 Fill.

D. The concrete sidewalk constructed as a pad adjacent to a traffic control foundation, shall conform to the requirements of 03 30 00 Cast-in-Place Concrete Class A concrete.

PART 3 - EXECUTION

3.1 CONSTRUCTION METHODS

A. **Excavation:** Excavation shall be made to the required depths below the finished grade, as shown on the plans or as directed. All soft and yielding material shall be removed and replaced with suitable material.

1. When connecting new concrete sidewalk to a section of existing concrete sidewalk, the connection point shall be at the nearest joint in the existing sidewalk.

B. **Gravel or Reclaimed Miscellaneous Aggregate Base:** The gravel or reclaimed miscellaneous aggregate base shall be placed in layers in accordance to 31 23 23 Fill, except as modified herein not over 6 inches in depth and to such a depth that after compaction it shall be at the specified depth below the finished grade of the walk. The base shall be wetted and rolled or tamped after the spreading of each layer.

C. **Forms:** Forms shall be constructed in accordance to 03 10 00 except as modified herein. Forms shall be of metal or wood, straight, free from warp and of sufficient strength to resist springing from the pressure of the concrete. If made of wood, they shall be of 2-inch surfaced plank except that at sharp curves thinner material may be used. If made of metal, they shall be of approved section and shall have a flat surface on the top. Forms shall be of a depth equal to the depth of the sidewalk. Forms shall be securely staked, braced and held firmly to the required line and grade and shall be sufficiently tight to prevent leakage of mortar. All forms shall be cleaned and oiled or wetted before concrete is placed against them. Sheet metal templates 1/8 inch in thickness, of the full depth and width of the walk, shall be spaced at intervals of 12 feet or as directed. If the concrete is placed in alternate sections, these templates shall remain in place until concrete has been placed on both sides of the template. As soon as the concrete has obtained its initial set, the templates shall be removed.

D. **Concrete:** The concrete shall be proportioned, mixed, placed, etc., in accordance with the provisions of Section 03 00 Cast-in-Place Concret - Class "C" Concrete, except as modified herein.

1. The concrete shall contain not less than 5% nor more than 7% entrained air at the time the concrete is deposited in the forms.

E. **Finishing:** The surface of the concrete shall be finished with a wood float or by other approved means. The outside edges of the slab and all joints shall be edged with a 1/4-inch radius edging tool. Each slab shall be divided into two or more sections by forming dummy joints with a jointing tool as directed.

F. **Backfilling and Removal of Surplus Material:** The sides of the sidewalk shall be backfilled with suitable material thoroughly compacted and finished flush with the top of the sidewalk in addition to requirements set forth in Section 31 23 23 Fill. All surplus material shall be removed and the site left in a neat and presentable condition to the satisfaction of the Engineer.

END OF SECTION 32 16 23.13

SECTION 32 16 23.16 – CONCRETE PAD

PART 1 - GENERAL

1.1 DESCRIPTION

A. This item shall consist of concrete pads constructed on a gravel base course in the locations and to the dimensions and details shown on the plans or as ordered and in accordance with these specifications.

1.2 RELATED REQUIREMENTS

A. Section 03 30 00 Cast-in-Place Concrete, for all concrete requirements.

B. Section 31 23 23 Fill

C. Section 03 20 00 Concrete Reinforcing

1.3 SUBMITTALS

A. See Section 01 33 00 – Submittal Procedures and Section 01 33 00.13 – Document Control for submittal procedures, except as modified herein.

B. Prior to fabricating any materials, the Trade Contractor shall submit shop drawing of the reinforcing steel and splicing materials, with material lists, materials designations, placement diagrams, bending diagrams, and manufacturer's literature for mechanical connections, for review and approval, in accordance with Section 01 33 00 Submittal Procedures and Section 01 33 00.13 – Document Control. The Trade Contractor is responsible for incidental revisions of materials furnished in accordance with shop drawing and order lists to make them comply with the requirements of the plans and specifications.

PART 2 - PRODUCTS

2.1 MATERIALS

A. Materials for this work shall conform to the requirements of Section 03 30 00 Cast-in-Place Concrete, Class "F" Concrete.

B. Air-entraining Portland cement and air-entraining admixtures shall conform to Section 03 30 00 Cast-in-Place Concrete

C. Gravel base shall be compacted granular fill and conform to the requirements of Section 31 23 23 Fill.

D. Reinforcement shall conform to requirements of Section 03 20 00 Concrete Reinforcing

PART 3 - EXECUTION

3.1 CONSTRUCTION METHODS

A. **Excavation:** Excavation shall be made to the required depths below the finished grade, as shown on the plans or as directed. All soft and yielding material shall be removed and replaced with suitable material.

B. **Gravel Base:** The provisions of Section 31 23 23 Fill, compacted granular fill, shall apply.

C. **Forms:** Forms shall be of metal or wood, straight, free from warp and of sufficient strength to resist springing from the pressure of the concrete. If made of wood, they shall be of 2-inch surfaced plank except that at sharp curves thinner material may be used. If made of metal, they shall be of approved section and shall have a flat surface on the top. Forms shall be of a depth equal to the depth of the pad. Forms shall be securely staked, braced and held firmly to the required line and grade and shall be sufficiently tight to prevent leakage of mortar. All forms shall be cleaned and oiled or wetted before concrete is placed against them.

D. Openings, Sleeves, Pipes, and embedded Items: Conform to requirements of the “ACI Building Code” Section 503, Pipes, conduits, ect., embedded in concrete. The Trade Contractor shall obtain the necessary information as the exact locations of holes, sleeves, recesses, ect. and to cooperate shall require him to do all cutting and patching of concrete that may thereby become necessary. Pipes shall not be coated with paint or enamel or otherwise, except galvanizing or approved equivalent.

E. **Concrete:** The concrete shall be proportioned, mixed, placed, etc., in accordance with the provisions of Section 03 30 00 Cast-in-Place Concrete for Class "F" Concrete, except as modified herein. The concrete shall contain not less than 5% nor more than 7% entrained air at the time the concrete is deposited in the forms. Air-entrainment shall be obtained and the concrete cured in accordance with the provisions of Section 03 30 00 Cast-in-Place Concrete for Concrete.

F. **Finishing:** The surface of the concrete shall be finished with a wood float or by other approved means. The outside edges of the slab and all joints shall be edged with a 1/4-inch radius edging tool. Each slab shall be divided into sections as shown on the plans by forming dummy joints with a jointing tool as directed.

G. **Backfilling and Removal of Surplus Material:** The sides of the pad shall be backfilled with material as shown on the plans. All surplus material shall be removed and the site left in a neat and presentable condition to the satisfaction of the Engineer.

1. **Construction Methods:**

A. **Shop Drawings**: Prior to fabricating any materials, the Contractor shall submit shop drawings of the reinforcing steel and splicing materials, with material lists, material designations, placement diagrams, bending diagrams and manufacturer's literature for mechanical connections, for review and approval, in accordance with Article 1.05.02. Any expenses incidental to the revision of materials furnished in accordance with shop

drawing and order lists to make them comply with the requirements of the plans, specifications or project specifications shall be borne by the Contractor.

B. **Fabrication:**

(a) Cutting and Bending: Bar reinforcement shall be cut and bent to the shapes shown on the plans. Fabrication tolerances shall be in accordance with the requirements of ACI 315. All bars shall be bent cold, unless otherwise permitted.

Coated bars shall not be field cut, unless permitted by the Engineer. Field cutting of coated bars should be performed using hydraulic-powered cutters or friction cutting tools to minimize coating damage and field touch-up. Flame cutting of coated bars will not be permitted. Field cut coated bars shall be repaired immediately.

Bars partially embedded in concrete shall not be field bent, except as shown on the plans or permitted by the Engineer.

(b) Hooks and Bend Dimensions: The dimensions of hooks and the diameters of bends measured on the inside of the bar shall be as shown on the plans. When the dimensions of hooks or the diameter of bends are not shown, they shall be in accordance with the ACI 318, "Building Code Requirements for Reinforced Concrete" as amended by ASTM A767M for galvanized bars.

(c) Identification: Bar reinforcement shall be shipped in standard bundles, tagged and marked in accordance with the CRSI "Manual of Standard Practice".

C. **Handling, Storing and Surface Condition of Reinforcement:** Steel reinforcement shall be stored above the surface of the ground on platforms, skids, or other supports and shall be protected as far as practical from mechanical injury and surface deterioration caused by exposure to conditions producing rust.

Epoxy-coated and galvanized reinforcing steel shall be handled and stored by methods that will not damage the coating. All systems for handling coated reinforcement shall have adequately padded contact areas wherever possible. All bundling bands shall be padded and all bundles shall be lifted with a strong back, multiple supports, or platform bridge so as to prevent bar-to-bar abrasion from sags in the bar bundle. Bars or bundles shall not be dropped or dragged. Coated reinforcing steel shall be transported and stored on wooden or padded supports. Epoxy-coated reinforcing steel, stored at the job site, shall be protected by covering with opaque polyethylene or other suitable protective material. Provisions shall be made for adequate ventilation to prevent condensation under the covering. Since the epoxy coating is flammable, the epoxy coated reinforcing shall not be exposed to any fire or flame.

Prior to placement of concrete, all reinforcement shall be free from dirt, loose rust or scale, mortar, paint, grease, oil, or other materials that would reduce bond. Reinforcement shall be free from injurious defects such as cracks and laminations. Bonded rust, surface seams, surface irregularities, or mill scale will not be cause for rejection, provided the minimum dimensions, cross section area, and tensile properties of a hand wire brushed specimen meet the physical requirements for the size and grade of steel specified.

D. **Placing and Fastening**

General: Steel reinforcement shall be accurately placed as shown on the plans and firmly held in position during the placing and setting of concrete. Bars shall be tied at all intersections except where the spacing is less than 12 inches (300 millimeters) in each direction when alternate intersections shall be tied Bars shall be tied at all intersections around the perimeter of each mat.

Bundled bars shall be tied together at not more than 6-foot (1800-millimeter) centers. Lap splices shall have a minimum of 2 ties or be tied 12 inches (300 millimeters) apart for the length of the splice, whichever requires the greater number of ties. For epoxy-coated reinforcement, tie wires and metal clips shall be epoxy, plastic or nylon coated. For galvanized reinforcement, tie wires and metal clips shall be plastic coated or galvanized.

With the exception of tie down bars, welding (tack welding) will not be permitted for assembly of reinforcement, unless shown on the plans. Tie down bars shall be placed as shown on the plans and a top longitudinal reinforcing bar tied to these bars. When welding coated bars an appropriate protective mask must be worn, safety equipment used and suitable ventilation provided.

If wire fabric reinforcement is shipped in rolls, it shall be straightened into flat sheets before being placed.

(a) **Support Systems:** Reinforcing steel shall be supported in its proper position by use of precast mortar blocks, wire bar supports, supplementary bars (tie-down bars), side form spacers or other approved devices. Such devices shall be sufficiently strong and properly placed at frequent intervals so as to maintain the cover between the reinforcing and the surface of the concrete. The reinforcing steel cover shall be no less than that shown on the plans and no greater than that shown plus 1/4 inch (6 millimeter). Platforms for the support of workers and equipment during concrete placement shall be supported directly on the forms and not on the reinforcing steel.

(b) **Precast Mortar Blocks:** Precast mortar blocks shall have a compressive strength not less than that of the concrete in which they are to be embedded. The face of the blocks in contact with forms for exposed surfaces shall not exceed 2 inches x 2 inches (50 millimeters x 50 millimeters) in size and shall have a color and texture that will match the concrete surface. Precast mortar blocks shall not be used on exposed surfaces of precast concrete members. When used on vertical or sloping surfaces, such blocks shall have an embedded wire for securing the block to the reinforcing. When used in slabs, either such a tie wire or, when the weight of the reinforcing is sufficient to firmly hold the blocks in place, a groove in the top of the block may be used. For epoxy-coated bars, such tie wires shall be epoxy, plastic or nylon coated. For galvanized bars, such tie wires shall be plastic coated or galvanized.

(c) **Wire Supports:** Wire bar supports, such as ferrous metal chairs and bolsters, shall conform to industry practice as described in the CRSI "Manual of Standard Practice of the Concrete Reinforcing Steel Institute." All bolsters or chairs which bear against the forms for exposed surfaces shall be equipped with snug fitting, high density, polyethylene tips which provide 1/2-inch (12-millimeter) minimum clearance between the metal and any exposed surface. For epoxy-coated reinforcement, all wire bar supports and bar clips shall be epoxy or plastic coated. For galvanized

reinforcement, chair and bar supports shall be hot-dip galvanized, after fabrication, in accordance with ASTM A123.

The maximum spacing of slab bolster rows and high chair rows for concrete deck slabs shall be 4 feet (1200 millimeters) unless otherwise directed by the Engineer.

(d) Repair of Coated Reinforcing Steel:

Epoxy-coated Reinforcing Steel - In addition to the requirements of ASTM D3963M, all damage (i.e., scratches, nicks, cracks) to the epoxy coating of the bar reinforcement, visible to the unaided eye with corrective vision, caused during shipment, storage or placement shall be repaired by the Contractor at the job site with approved patching material. Ends of bars that have been sheared, saw cut or cut by other means shall be coated with approved patching material. The areas on the bars and tie down bars damaged by welding shall be repaired with approved patching material.

Patching of damaged areas shall be performed in accordance with the patching material manufacturer's recommendations. Any singular damaged surface area (prior to repair with approved patching material), shall not exceed 2% of the total surface area of the bar. The total bar surface area covered by patching material shall not exceed 5% of the total surface area of the bar. Should either of these limits be exceeded the bar shall be removed from the work and replaced with an acceptable bar. All patching material shall be fully cured prior to placing concrete.

The patching material shall be compatible with the epoxy coating, inert in concrete, and suitable for repairs in the field. The patching material shall be prequalified, as required for the coating material, and shall be either identified on the container as meeting the requirements of Annex A1 of ASTM D3963M or shall be accompanied by a Materials Certificate certifying that the material meets the requirements of said Annex A1.

Galvanized Reinforcing Steel - All damage (i.e. scratches, nicks, cracks) to the galvanized coating on bar reinforcement, visible to the unaided eye with corrective vision, caused during shipment, storage or placement shall be repaired by the Contractor at the job site in accordance with ASTM A780, Annex A2 - "Repair using Zinc-Rich Paints". Ends of bars that have been sheared, saw cut or cut by other means shall be coated with zinc-rich paint. The area on the bars and tie down bars damaged by welding shall be repaired with zinc-rich paint.

Field coating of damaged areas shall be performed in accordance with the zinc-rich paint manufacturer's recommendations. The zinc-rich paint shall conform to FS TT-P-641, Type 1 and shall be brush applied to achieve a dry film thickness from 3 - 6 mils. All touchup paint shall be fully cured prior to placing concrete.

E. **Splicing of Bars:**

(a) General: All reinforcement shall be furnished in the full lengths indicated on the plans unless otherwise permitted. Except for splices shown on the plans, splicing of bars will not be permitted without written approval of the Engineer. Splices shall be staggered as far as possible.

(b) Lapped Splices: Lapped splices shall be of the lengths shown on the plans.

In contact lap splices, the bars shall be placed in contact and tied together in such a manner as to maintain the minimum distance to the surface of the concrete shown on the plans.

In non-contact lap splices, the bars shall be placed as shown on the plans and tied to adjacent bars in such a manner as to maintain the minimum distance to the surface of the concrete shown on the plans.

(c) **Welded Splices:** Welded splices shall be used at the locations shown on the plans. Welding shall conform to AWS publication "Structural Welding Code, Reinforcing Steel, AWS D1.4" and applicable project specifications.

(d) Welded splices shall not be used on epoxy-coated or galvanized bars. No welding shall be performed close enough to epoxy-coated or galvanized bars to cause any heating of the coating.

(e) Splices made with Dowel Bar Mechanical Connections: Splices made with dowel bar mechanical connections shall be used at the locations shown on the plans. The minimum size of the bars and the length of the lap splices for the dowel bar mechanical connections shall be as shown on the plans.

(f) The mechanical connections shall be installed in accordance with the manufacturers recommendations. All tools and equipment required to install and field inspect the connections shall be provided by the Contractor. The Contractor shall take all measures necessary to prevent concrete from adhering to the threaded portions of the mechanical connections.

(g) After installing the coated mechanical connectors, all damaged areas on the coated connectors shall be repaired in accordance with 6.02.03-4(e).

F. **Splicing of Welded Wire Fabric:** Welded wire fabric reinforcement shall be lap spliced as shown on the plans.

G. **Substitutions**: Substitution of different size bars will be permitted only when authorized by the Engineer. The substituted bars shall have an area equivalent to or larger than the area shown on the plans.

H. **Inspection**: Reinforcement in any member or component shall be placed, inspected and approved by the Engineer before placing of concrete begins. Concrete placed prior to approval of the reinforcement may be rejected and its removal required

I. **Reinforcement:** Cutting and Bending: Bar reinforcement shall be cut and bent to the shapes shown on the plans. Fabrication tolerances shall be in accordance with the requirements of ACI 315. All bars shall be bent cold, unless otherwise permitted.

Coated bars shall not be field cut, unless permitted by the Engineer. Field cutting of coated bars should be performed using hydraulic-powered cutters or friction cutting tools to minimize coating damage and field touch-up. Flame cutting of coated bars will not be permitted. Field cut coated bars shall be repaired immediately.

Bars partially embedded in concrete shall not be field bent, except as shown on the plans or permitted by the Engineer.

1. Hooks and Bend Dimensions: The dimensions of hooks and the diameters of bends measured on the inside of the bar shall be as shown on the plans. When the dimensions of hooks or the diameter of bends are not shown, they shall be in accordance with the ACI 318, "Building Code Requirements for Reinforced Concrete" as amended by ASTM A767M for galvanized bars.

2. Identification: Bar reinforcement shall be shipped in standard bundles, tagged and marked in accordance with the CRSI "Manual of Standard Practice".

3. Handling, Storing and Surface Condition of Reinforcement: Steel reinforcement shall be stored above the surface of the ground on platforms, skids, or other supports and shall be protected as far as practical from mechanical injury and surface deterioration caused by exposure to conditions producing rust.

H. Epoxy-coated and galvanized reinforcing steel shall be handled and stored by methods that will not damage the coating. All systems for handling coated reinforcement shall have adequately padded contact areas wherever possible. All bundling bands shall be padded and all bundles shall be lifted with a strong back, multiple supports, or platform bridge so as to prevent bar-to-bar abrasion from sags in the bar bundle.

a. Bars or bundles shall not be dropped or dragged. Coated reinforcing steel shall be transported and stored on wooden or padded supports. Epoxy-coated reinforcing steel, stored at the job site, shall be protected by covering with opaque polyethylene or other suitable protective material. Provisions shall be made for adequate ventilation to prevent condensation under the covering. Since the epoxy coating is flammable, the epoxy coated reinforcing shall not be exposed to any fire or flame.

b. Prior to placement of concrete, all reinforcement shall be free from dirt, loose rust or scale, mortar, paint, grease, oil, or other materials that would reduce bond. Reinforcement shall be free from injurious defects such as cracks and laminations. Bonded rust, surface seams, surface irregularities, or mill scale will not be cause for rejection, provided the minimum dimensions, cross section area, and tensile properties of a hand wire brushed specimen meet the physical requirements for the size and grade of steel specified.

1. Placing and Fastening:

a. General: Steel reinforcement shall be accurately placed as shown on the plans and firmly held in position during the placing and setting of concrete. Bars shall be tied at all intersections except where the spacing is less than 12 inches in each direction when alternate intersections shall be tied. Bars shall be tied at all intersections around the perimeter of each mat.

Bundled bars shall be tied together at not more than 6-foot centers. Lap splices shall have a minimum of 2 ties or be tied 12 inches apart for the length of the splice, whichever requires the greater number of ties. For epoxy-coated reinforcement, tie wires and metal clips shall be epoxy, plastic or nylon coated. For galvanized reinforcement, tie wires and metal clips shall be plastic coated or galvanized.

With the exception of tie down bars, welding (tack welding) will not be permitted for assembly of reinforcement, unless shown on the plans. Tie down bars shall be

placed as shown on the plans and a top longitudinal reinforcing bar tied to these bars. When welding coated bars an appropriate protective mask must be worn, safety equipment used and suitable ventilation provided.

If wire fabric reinforcement is shipped in rolls, it shall be straightened into flat sheets before being placed.

b. Support Systems: Reinforcing steel shall be supported in its proper position by use of precast mortar blocks, wire bar supports, supplementary bars (tie-down bars), side form spacers or other approved devices. Such devices shall be sufficiently strong and properly placed at frequent intervals so as to maintain the cover between the reinforcing and the surface of the concrete. The reinforcing steel cover shall be no less than that shown on the plans and no greater than that shown plus 1/4 inch. Platforms for the support of workers and equipment during concrete placement shall be supported directly on the forms and not on the reinforcing steel.

c. Precast Mortar Blocks: Precast mortar blocks shall have a compressive strength not less than that of the concrete in which they are to be embedded. The face of the blocks in contact with forms for exposed surfaces shall not exceed 2 inches x 2 inches in size and shall have a color and texture that will match the concrete surface. Precast mortar blocks shall not be used on exposed surfaces of precast concrete members. When used on vertical or sloping surfaces, such blocks shall have an embedded wire for securing the block to the reinforcing. When used in slabs, either such a tie wire or, when the weight of the reinforcing is sufficient to firmly hold the blocks in place, a groove in the top of the block may be used. For epoxy-coated bars, such tie wires shall be epoxy, plastic or nylon coated. For galvanized bars, such tie wires shall be plastic coated or galvanized.

d. Wire Supports: Wire bar supports, such as ferrous metal chairs and bolsters, shall conform to industry practice as described in the CRSI "Manual of Standard Practice of the Concrete Reinforcing Steel Institute." All bolsters or chairs which bear against the forms for exposed surfaces shall be equipped with snug fitting, high density, polyethylene tips which provide 1/2-inch minimum clearance between the metal and any exposed surface. For epoxy-coated reinforcement, all wire bar supports and bar clips shall be epoxy or plastic coated. For galvanized reinforcement, chair and bar supports shall be hot-dip galvanized, after fabrication, in accordance with ASTM A123.

The maximum spacing of slab bolster rows and high chair rows for concrete deck slabs shall be 4 feet unless otherwise directed by the Engineer.

e. Repair of Coated Reinforcing Steel: Epoxy-coated Reinforcing Steel - In addition to the requirements of ASTM D3963M, all damage (i.e., scratches, nicks, cracks) to the epoxy coating of the bar reinforcement, visible to the unaided eye with corrective vision, caused during shipment, storage or placement shall be repaired by the Trade Contractor at the job site with approved patching material. Ends of bars that have been sheared, saw cut or cut by other means shall be coated with approved patching material. The areas on the bars and tie down bars damaged by welding shall be repaired with approved patching material.

Patching of damaged areas shall be performed in accordance with the patching material manufacturer's recommendations. Any singular damaged surface area (prior to repair with approved patching material), shall not exceed 2% of the total surface area of the bar. The total bar surface area covered by patching material shall not exceed 5% of the total surface area of the bar. Should either of these limits be exceeded the bar shall be removed from the work and replaced with an acceptable bar. All patching material shall be fully cured prior to placing concrete.

The patching material shall be compatible with the epoxy coating, inert in concrete, and suitable for repairs in the field. The patching material shall be prequalified, as required for the coating material, and shall be either identified on the container as meeting the requirements of Annex A1 of ASTM D3963M or shall be accompanied by a Materials Certificate certifying that the material meets the requirements of said Annex A1.

f. Galvanized Reinforcing Steel - All damage (i.e. scratches, nicks, cracks) to the galvanized coating on bar reinforcement, visible to the unaided eye with corrective vision, caused during shipment, storage or placement shall be repaired by the Trade Contractor at the job site in accordance with ASTM A780, Annex A2 - "Repair using Zinc-Rich Paints". Ends of bars that have been sheared, saw cut or cut by other means shall be coated with zinc-rich paint. The area on the bars and tie down bars damaged by welding shall be repaired with zinc-rich paint.

Field coating of damaged areas shall be performed in accordance with the zinc-rich paint manufacturer's recommendations. The zinc-rich paint shall conform to FS TT-P-641, Type 1 and shall be brush applied to achieve a dry film thickness from 3 - 6 mils. All touchup paint shall be fully cured prior to placing concrete.

2. Splicing of Bars:

a. General: All reinforcement shall be furnished in the full lengths indicated on the plans unless otherwise permitted. Except for splices shown on the plans, splicing of bars will not be permitted without written approval of the Engineer. Splices shall be staggered as far as possible.

b. Lapped Splices: Lapped splices shall be of the lengths shown on the plans. In contact lap splices, the bars shall be placed in contact and tied together in such a manner as to maintain the minimum distance to the surface of the concrete shown on the plans.

In non-contact lap splices, the bars shall be placed as shown on the plans and tied to adjacent bars in such a manner as to maintain the minimum distance to the surface of the concrete shown on the plans.

c. Welded Splices: Welded splices shall be used at the locations shown on the plans. Welding shall conform to AWS publication "Structural Welding Code, Reinforcing Steel, AWS D1.4" and applicable project specifications. Welded splices shall not be used on epoxy-coated or galvanized bars. No welding shall be performed close enough to epoxy-coated or galvanized bars to cause any heating of the coating.

d. Splices made with Dowel Bar Mechanical Connections: Splices made with dowel bar mechanical connections shall be used at the locations shown on the plans. The minimum size of the bars and the length of the lap splices for the dowel bar mechanical connections shall be as shown on the plans. The mechanical connections shall be installed in accordance with the manufacturer's recommendations. All tools and equipment required to install and field inspect the connections shall be provided by the Trade Contractor. The Trade Contractor shall take all measures necessary to prevent concrete from adhering to the threaded portions of the mechanical connections.

After installing the coated mechanical connectors, all damaged areas on the coated connectors shall be repaired in accordance with 6.02.03-4(e).

3. Splicing of Welded Wire Fabric: Welded wire fabric reinforcement shall be lap spliced as shown on the plans.

4. Substitutions: Substitution of different size bars will be permitted only when authorized by the Engineer. The substituted bars shall have an area equivalent to or larger than the area shown on the plans.

5. Inspection: Reinforcement in any member or component shall be placed, inspected and approved by the engineer before place of concrete begins. Concrete placed prior to approval of the reinforcement may be rejected and the Trade Contractor shall be responsible for the removal.

I. Cold Weather: Unless specifically authorized by the Engineer, concrete work shall not proceed when ambient temperature is below 40°F. Comply with ACI 306 in cold weather. Maintain concrete temperature of 60°F. Reinforcement forms and ground in contact with concrete shall be free of frost. Keep concrete and formwork at least 50°F for at least 96 hours after placing concrete. The use of calcium choride in any form is not permitted. Non-chloride accelerator shall be used when ambient temperature is below 50°F. A manufacturer's representative shall be available for consultation by phone or on site upon 72 hour notice.

J. Hot Weather: Concrete, when deposited, shall be less than 85°F. Cool the mix in a manner acceptable to the Engineer if the concrete temperature is higher. Comply with ACI 305 in hot weather. Evaporation Retardant shall be used when ambient temperature exceeds 80°F.

END OF SECTION 32 16 23.16

SECTION 32 17 23.13 - PAINTED PAVEMENT MARKINGS

PART 1 GENERAL

1.1 SECTION INCLUDES

A. Description: This item shall consist of furnishing and installing retroreflective white and yellow epoxy resin pavement markings of the width and color specified and epoxy resin pavement markings, symbols and legends at the locations indicated on the plans and in conformity with the plans, these specifications and as directed by the Engineer.

Epoxy resin pavement markings includes epoxy resin installed with a truck-mounted machine such as center lines, lane lines, and shoulder lines.

Epoxy resin pavement markings, symbols and legends include stop bars, crosswalks, parking stalls, lane arrows, legends, and markings within areas such as paved islands, gore areas and paved medians.

The exact location for passing zones will be determined by the Engineer prior to the application of the pavement markings. The Trade Contractor shall notify the Engineer of the anticipated date of installation at least two weeks prior to that date, to allow time for the determination of the passing zone locations.

1.2 RELATED REQUIREMENTS

A. Section 32 12 16 - Asphalt Paving.

1.3 SUBMITTALS

A. See Section 01 33 00 - Submittal Procedures and Section 01 33 00.13 – Document Control.

1.4 FIELD CONDITIONS

A. Do not install products under environmental conditions outside manufacturer's absolute limits.

1.5 PERFORMANCE

In order to be accepted, the applied markings must meet the following minimum retroreflectivity reading as measured using an LTL 2000 Retrometer with 30-meter geometry 1 to 2 weeks after installation:

White Epoxy 250 millicandelas per square foot per foot candle

Yellow Epoxy 175 millicandelas per square foot per foot candle

1.6 WARRANTY

The Trade Contractor shall warrant for the period and percentage level indicated below that the installation shall remain intact and serviceable. The installed material shall show no fading, lifting, shrinking, tearing, rollback, distortion or chipping due to vehicular traffic or normal maintenance activities including snow plowing. Although some wear is expected, the markings shall not wear out for the period and percentage level indicated herein.

First Eighteen Months:

Epoxy Resin Pavement Markings 95% linear feet

Epoxy Resin Pavement Markings, Symbols and Legends 95% square feet

In addition, the epoxy resin pavement markings shall be warranted to retain a minimum retroreflective value of 150 millicandelas per foot candle per square foot one year after installation.

The measurements shall be made utilizing an LTL 2000 Retrometer with 30-meter geometry.

Determination of percentages of serviceability and minimum retroreflective values will be made jointly at the end of 1 year by the Trade Contractor's representative and by the Engineer. The decision of the Engineer shall be final. The term "percentage of serviceability" shall be defined as follows: The percentage of serviceability of the markings shall apply to the total linear feet for Epoxy Resin Pavement Markings and total square feet for the Epoxy Resin Pavement Markings, Symbols and Legends measured.

The Trade Contractor shall replace, entirely at the Trade Contractor's expense, such amount of markings, if any, required to meet the above stated percentage. The Engineer will indicate the areas and lines to be replaced to meet the above stated percentages. The Trade Contractor shall also replace those markings that fail the minimum value for retroreflectivity. Replacement under either situation shall include all materials, equipment, labor and work incidental thereto.

The Trade Contractor shall provide to the Department, at no extra cost, any manufacturer's warranties or guarantees that exceed the minimum requirements stated previously, that are normally provided by the manufacturer.

These written warranties shall be provided when the documentation for the product is provided. These warranties will be retained by the Department.

PART 2 PRODUCTS

2.1 MATERIALS

A. General Requirements:

1. Paints and enamels shall consist of pigments of the required fineness and composition, ground in the required vehicle by a suitable grinding machine to the required fineness. All pigments, resins, oils, thinners and driers used shall be of the best quality, free from adulterants of any kind and shall comply with the specific requirements of the specifications. Materials not definitely covered by specifications shall be of the best quality used for the purpose in good commercial practice.

2. Proportions: All proportions as specified in formulas are by mass unless otherwise specified.

3. Fineness: All pigments, except aluminum, unless otherwise specified, shall be so finely ground that 100% shall pass through a No. 200 sieve; and not less than 97 % shall pass through a No. 325 sieve.

4. Curdling, Livering, Leveling: No paint or enamel shall liver or curdle, and the pigment shall remain in suspension in a satisfactory manner. The enamel type paints shall level properly and not show brush marks.

5. Colors: All paints and enamels shall be matched to the Department's standard shades. Color chips may be obtained at the Laboratory.

6. Time of Drying: All paints or enamels, unless otherwise specified, shall dry to the full gloss in not more than 18 hours.

7. Weight per Gallon: The weight per gallon (liter) of all paints and enamels shall be determined at 77°F.

8. Shipping: All paints and enamels shall be shipped in strong metal containers, plainly marked with the name, net weight and volume of paint or enamel content. The manufacturer's name, address, date and lot number shall be stenciled on every package.

9. Samples, Sampling, and Testing: When so requested, samples and certified analysis of all pigments, oils, resins, thinners, driers or paint furnished shall be supplied by the manufacturer within 10 days after request is made therefor.

10. Sampling and testing will be in accordance with ASTM, Federal Supply Service, or by methods on file in the Laboratory of the Department.

    The following tests on the paints will follow the procedures outlined in Federal Test Method Standard No. 141: Paint, Varnish, Lacquer and Related Materials; Methods of Inspection, Sampling and Testing.:

Tests	Methods
Percentage of pigment	4021
Isolation of vehicle	4032
Nonvolatile in vehicle	4041
Phthalic anhydride	7021
Weight per Gallon	4184
Uncombined water	4081
Coarse particles and skins	4092
Viscosity: Krebs-Stormer	4281
Drying time	4061
Condition in container	3011
Fineness of Grind	4411
Skinning (48 hours)	4141
Brushing properties	2141, 4321
Spraying properties	2131, 4331

Standards: All standards herein are minimum standards.

Identification: Each container must bear a label with the following information thereon: Name and address of manufacturer, production batch number, date of manufacture, shipping point, grade name and/or identification number, type of material, number of gallons, trade contract number, use intended, directions for application and formula. Improperly labeled samples and deliveries shall be rejected.

Certification: The manufacturer shall furnish a certified test report by an independent testing laboratory prior to the start of work indicating that the material as specified has been tested in accordance with ASTM or ACI testing procedures noted in this specification. The certified test report shall indicate the results of testing for the criteria contained herein.

Additionally, infrared spectrophotometer plots for both components of the test material shall be included by the independent laboratory in the certified test report. The unused material submitted for testing by the independent laboratory (minimum 1 gallon unmixed components) shall be forwarded to the ConnDOT, Materials Testing Laboratory, 280 West Street, Post Office Box 207, Rocky Hill, Connecticut 06067. This sample shall be labeled as required under Section 01 33 00 Submittal Procedures.

The manufacturer shall furnish certified test reports, in accordance with Section 01 33 00 Submittal Procedures for each batch delivered for application at the project site.

Detailed Requirements:

a. Epoxy Resin Material: The material shall be composed of epoxy resins and pigments only.

b. Composition:

WHITE (percent by weight)	YELLOW (percent by weight)
20% ± 2% Titanium Dioxide	25% ± 2% Chrome Yellow

(ASTM D 476 Type III)	(ASTM D 211 Type III)
80% ± 2% Epoxy Resins	75% ± 2% Epoxy Resins

c. Color: The color of the white material shall be no darker or yellower than color chip 17778 of FS No. 595a of the latest issue, when the material is placed in a type EH weatherometer for a period of 500 hours and weathered according to ASTM G 23. Any noticeable discoloration of the epoxy markings, either during or after application to the pavement surface, as determined by the Engineer, will be considered unacceptable. Any discolored areas shall be removed and the markings shall be reapplied in accordance with this specification. The color of the yellow shall be reasonably close to color chip 13538 of the Federal Standard No. 595a of the latest issue.

d. Adhesion Capabilities: When the adhesion of the material to Portland cement concrete (the concrete shall have a minimum of 300 psi tensile strength) is tested according to ACI 503R testing procedure, the failure of the system must take place in the concrete. The concrete shall be 90°F (32°C) when the material is applied, after which the material shall be allowed to cure for 72 hours at 73°F ± 3.5°F.

e. Abrasion Resistance: When the abrasion resistance of the material is tested according to ASTM C 501 with a CS-17 wheel under a load of 1000 grams for 1000 cycles, the wear index shall be no greater than 82. (The wear index is the weight (mass) in milligrams that is abraded from the sample under the test conditions).

f. Hardness: The Type D Durometer hardness of the material shall be not less than 75 nor more than 90 when tested according to ASTM D2240 after the material has cured for 72 hours at 73°F ± 3.5°F.

g. Tensile Strength: The tensile strength of the material, when tested according to ASTM D 638, shall not be less than 6,000 psi after 72 hours cure at 73°F ± 3.5°F.

h. Compressive Strength: The compressive strength of the material, when tested according to ASTM D 695, shall not be less than 12,000 psi after 72 hours cure at 73°F ± 3.5°F.

i. Shelf Life: The individual components shall not require mixing prior to use when stored for a period of 12 months.

j. Glass Beads: General Requirements – The beads shall be transparent, clean, colorless glass, smooth and spherically shaped, free of milkiness, pits, or excessive air bubbles and conform to the following specific requirements as detailed in Section 2.2.

2.2 QUALITY CONTROL

The beads shall be segregated into maximum lots of 2,500 pounds and lot numbers shall be stamped onto each lot. Each lot shall be tested for gradation, rounds and embedment coating.

Gradation – The glass spheres shall meet the following gradation requirements:

Grading "A"		Grading "B"	
Sieve Size	% Passing	Sieve Size	% Retained
#20 (850 µm)	100	#10 (2.0 mm)	0
#30 (600 µm)	80 – 95	#12 (1.7 mm)	0 – 5
#50 (300 µm)	9 – 42	#14 (1.4 mm)	5 – 20
#80 (180 µm)	0 – 10	#16 (1.18 mm)	40 – 80
		#18 (1.0 mm)	10 – 40
		#20 (850 µm)	0 – 5
		Pan	0 – 2

Roundness – The glass beads shall have a minimum of 80% rounds per screen for two highest sieve quantities and no more than 3% angular particles per screen for Grading "B". The remaining sieve fractions shall typically be no less than 75% rounds.

Refractive Index – The glass beads shall have a refractive index of 1.50 to 1.52

PART 3 EXECUTION

3.1 EXAMINATION

A. Do not begin installation until substrates have been properly prepared.

B. If substrate preparation is the responsibility of another installer, notify Designer of unsatisfactory preparation before proceeding.

3.2 CONSTRUCTION

A. Equipment: Equipment furnished shall include an applicator truck of adequate size and power, together with (a) remote application equipment designed to apply an epoxy resin material in a continuous pattern and (b) portable glass bead applicators, one for each size bead, designed to provide uniform and complete coverage of the epoxy binder by a controlled free-fall method. Pressurized glass bead application shall not be used. Before epoxy color is changed, equipment shall be cleaned out sufficiently to ensure that the color of material applied will be correct.

It shall be the Trade Contractors responsibility to provide, when working on a highway with more than one lane in either direction, the applicator truck (striper) with a permanently mounted direction variable illuminated arrow board, fully operational and visible to approaching traffic.

For markings applied on pavements over one year old, equipment furnished shall also include a power washing machine capable of cleaning the pavement with a pressure of 2,400 to 2,800 psi with water heated to 180°F - 195°F. No chemicals shall be added to the water used in the process. The power washer shall be equipped with a turbo blast tip with an oscillating head and shall be capable of supplying a minimum of 5 gallons/minute gun. All guns on the spray carriages shall be in full view of the operator(s) during operation.

Each vehicle furnished shall include at least one experienced operator, who shall be fully knowledgeable about all equipment operations and application techniques.

The Trade Contractor shall also furnish one technical expert, who shall be fully knowledgeable about all equipment operations and application techniques, to oversee the project operation.

B. Procedures: Pavement markings shall be applied in accordance with the details shown on the plans and the control points established by the Trade Contractor and approved by the Engineer.

1. The road surface shall be cleaned at the direction of the Engineer just prior to application. Pavement cleaning shall consist of power washing using clean water heated to 180°F - 195°F at a pressure of 2,240 - 2,800 psi. The areas to be power washed shall include all areas where epoxy marking symbols and legends (including stop bars and crosswalks) are to be applied and at least 1 inch (25 millimeters) beyond the area to be marked. The surface shall be cleaned to the satisfaction of the Engineer. For other pavement areas, cleaning shall consist of brushing with rotary broom (non-metallic), and any additional work as recommended by the material manufacturer and acceptable to the Engineer. New Portland cement concrete surfaces shall be cleaned by abrasive blasting to remove any surface treatments and/or laitance. New bituminous concrete surfaces are not to be power washed.

2. All surfaces that are power washed shall be allowed to dry sufficiently prior to the application of the epoxy markings. The areas to be marked shall be broom cleaned immediately prior to the application of the epoxy markings. Glass beads shall be applied immediately after application of the epoxy resin marking to provide an immediate no-track system.

3. The Trade Contractor will place necessary “spotting” at appropriate points to provide horizontal control for striping and to determine necessary starting and cutoff points. Broken line intervals will not be marked. Longitudinal joints, pavement edges and existing markings shall serve as horizontal control when so directed.

4. A tolerance of 0.25 inch under or 0.25 inch over the specified width shall be allowed for striping provided the variation is gradual and does not detract from the general appearance. Alignment deviations from the control guide shall not exceed 2 inches provided the variation is gradual and does not detract from the general appearance. Material shall not be applied over a longitudinal joint. Establishment of application tolerances shall not relieve the Trade Contractor of the responsibility to comply as closely as practicable with the planned dimensions.

5. Operations shall be conducted only when the road surface temperature is at least 40°F or as allowed by the Engineer. They shall be discontinued during periods of rain, and shall not continue until the Engineer determines that the pavement surface is dry enough to achieve adhesion.

6. The epoxy shall be uniformly applied to the surface to be marked to ensure a wet film thickness of the applied epoxy, without glass beads, of 20 mils +/- 1 mil.

7. Glass beads conforming to the requirements of Grading "B" (larger beads) shall be applied at a rate of 12 pounds per gallon of epoxy pavement marking material, immediately followed by a second drop of glass beads conforming to the requirements of Grading "A" (smaller beads) applied at a rate of 13 pounds per gallon of epoxy pavement marking material. Traffic cones or some other acceptable method shall be used to protect the pavement markings until cured.

8. Time to No-Track: The material shall be in "no-tracking" condition within 15 minutes, or as allowed by the Engineer. The no-tracking time shall be determined by passing over the line with a passenger car or pickup truck in the simulated passing maneuver. A marking showing no visual deposition of the material to the pavement surface when viewed from a distance of 50 feet shall be considered as showing "no-tracking" and conforming to this requirement for time to no-track.

9. When stencils are used during the application of epoxy markings, care must be used when removing the stencils so that the epoxy resin does not drip on the road, sidewalk, grass, etc., and so that the applied markings have edges which are clean, straight and neat.

10. Epoxy resin pavement markings may be applied over existing painted markings provided they are sufficiently worn to allow adequate adhesion. If required by the Engineer, existing plastic, thermoplastic, epoxy or freshly painted markings shall be removed prior to the application of epoxy markings. Payment for removal will be made under the item "Removal of Pavement Markings."

C. Crosswalks: Only glass beads conforming to the requirements of Grading "A" (smaller beads) shall be applied at a rate of 25 pounds per gallon of epoxy pavement marking material.

END OF SECTION 32 17 23.13

SECTION 32 17 26.01 – RUMBLE STRIPS - MANUAL

PART 1 - GENERAL

1.1 SECTION INCLUDES

A. Installation of transverse rumble strips on asphalt roadways where shown on the plans or where directed by the Engineer, and in conformance with these specifications.

1.2 SUBMITTALS

A. See Section 01 33 00 - Submittal Procedures for submittal procedures.

B. See Section 01 33 00.13 Document Control.

C. See Section 31 23 16 - Excavation, for disposal of unsuitable material.

PART 2 - PRODUCTS – NOT USED

PART 3 - EXECUTION

3.1 CONSTRUCTION METHODS

A. The Trade Contractor shall pre-mark the location of the edge of the cut, and the beginning and ending points of the sections, prior to the installation of the rumble strips. The Engineer shall review and approve the locations.

B. The Trade Contractor shall arrange for a technical representative, from the company which produces the milling machine to be used on the project, who will be required to be on-site from the beginning of the operation in order to ensure results that meet the requirements of the plans and specifications until such time the Engineer is satisfied.

C. The equipment shall be able to install the rumble strips in sections at the locations shown on the plans. The cutting head(s) shall have the cutting tips arranged in such a pattern as to provide a relatively smooth cut (approximately 1/16 of an inch between peaks and valleys) in one pass. The equipment shall include suitable provisions for the application of water to prevent dusting.

D. The rumble strips shall have finished dimensions of 7 inches (+/- ½ inch) wide in the direction of travel and shall be a 108 inches (+/- 6 inches) long measured perpendicular to the direction of travel. Rumble strips shall be spaced 12 inch on center for a total length of 5 foot per location. The depressions shall have a concave circular shape with a minimum ½ inch depth at center (maximum allowable depth is 5/8 inch measured to a valley). The rumble strips shall be centered on the lane in which they are placed. Alignment of the cut shall be checked and verified by the Engineer.

E. The cutting tool shall be equipped with guides to provide consistent alignment of each cut in relation to the roadway.

F. The Trade Contractor shall pick up any waste material resulting from the operation in a manner acceptable to the Engineer. This waste material shall be disposed of in accordance with Section 31 23 16 sub-article 3.3.A disposal of unsuitable material.

G. The work area shall be returned to a debris-free state prior to re-opening to traffic.

END OF SECTION 32 17 26.01

SECTION 32 31 13 – CHAIN LINK FENCES AND GATES

PART 1 GENERAL

1.1 SECTION INCLUDES

A. Work under this item shall consist of furnishing and installing woven wire fencing and gates of the type and height specified and supported by metal posts erected where indicated on the plans or as ordered and in conformity with these specifications. Chain link fences and gates shall also include the furnishing and construction of a grounding system.

B. Construction of pedestrian gates shall include an electro-mechanical lock with associated wiring and underground conduit for a complete installation. The gates shall also be capable of being operated from MOW building, the guard booth operator, or via a proximity or slide access card. The gates shall also include a row of three strand barbed wire on top of them.

C. Construction of sliding gates shall include all appliances with associated wiring and underground conduit for a complete installation. The gates shall also be capable of being operated from MOW building, the guard booth operator, or via a proximity or slide access card. The gates shall also include a row of three strand barbed wire on top of them.

D. Construction of temporary fencing shall consist of furnishing and installing woven wire fencing and gates of the type and height specified and ordered in accordance with these specifications. Temporary fence shall be supported by stanchions and shall not include a grounding system. All temporary gates shall be driven post supported, include a locking mechanism and a heavy-duty padlock with 2 keys shall be furnished by the Trade Contractor for each gate or set of double gates.

1.2 SUBMITTALS

A. See Section 01 33 00 - Submittal Procedures and Section 01 33 00.13 – Document Control for submittal requirements for this work.

1.3 RELATED REQUIREMENTS

A. Section 03 30 00, for cast-in-place concrete.

B. Section 28 13 00, for access control.

1.4 PERFORMANCE REQUIREMENTS:

A. The performance requirements for pedestrian gates shall be as follows:

1. The Chain Link Pedestrian Gate shall be impossible to open when it is in the closed position except by electrical and mechanical means.

2. Operating Criteria:

   a. Gate shall be furnished with an electro-mechanical lock operating on 24VDC, 2 Amps maximum.

   b. The Gate shall be equipped with an automatic door.

   c. The Gate shall be equipped with a door position switch.

3. Components:

   a. Security gate panel filler shall be chain link mesh for filler fabric.

   b. Two needle bearing hinges shall be furnished having a thrust capacity of 600 lbs per pair.

   c. 24 VDC, 2 Amp maximum electro-mechanical swing gate lock, keyed both sides shall be supplied with five keys per key code.

   d. The Gate shall be equipped with a door closer whose case and integral parts are steel and cast iron with constant viscosity liquid from 120ºF to -30ºF. Rust inhibitor paint shall be applied.

   e. Door pulls shall be located at heights accessible to wheelchair bound users.

   f. Steel frames, stiles and rails shall be tubular in cross-section with a minimum wall thickness of 3/16-inch. Members shall be mitered and welded at the corners.

   g. Frame shall be founded in concrete footings of size and depth recommended by the manufacturer and approved by the CTDOT PM.

4. Chain Link Fabric:

   a. Chain Link: 2-inch x 2-inch x 9 gauge aluminized steel chain link fabric shall fill the entire length and width of the gate. Fabric shall be attached to top, bottom and sides of the frame.

   b. The gate shall be topped by one additional foot of three strand barbed wire.

5. Finish:

   a. The entire gate frame and door assembly shall be hot-dipped galvanized after fabrication and welding.

B. The performance requirements for cantilever sliding gates shall be as follows:

1. Operating Criteria:

The Chain Link Cantilever Sliding Gate shall open and close to provide convenience and security. The operator shall utilize dual voltage 208/240 volt AC single phase power. Control voltage in each case is 5 Volt DC. The cantilever sliding gate shall operate with the following:

a. Operation shall be by means of a 1 horsepower single phase instant reversing motor that is sufficiently constructed to open and close the gate a minimum of forty times per hour, transferring power to a four inch diameter pulley, to a right angle oil bath gear reducer using another four inch diameter pulley and V-belt. Power is then transferred through a sliding collar disconnect system to the output drive shaft equipped with a #40 drive sprocket and roller chain which attaches to the gate with heavy-duty gate attachment brackets. Intermediate chain supports with anti-catch design shall also be supplied.

b. The operator shall open the gate at a rate of approximately 11 inches per second.

c. The #40 chain shall be coated with “Armor Coat” corrosive resistant chain coating. Corrosive resistance exceeds nickel plating.

d. Components:

2. Standard mechanical components shall include as a minimum.

a. 3/16 inch thick, weather resistant UV-stabilized polyethylene one piece cover which is fully removable and lockable.

b. Heavy-duty, plated frame with mounting legs for pad mounting standard.

c. Pedestal to raise operator from ground level and protect from high water.

d. 20:1 right-angle oil bath gear reducer.

e. Arctic package with immersion heater.

f. One inch solid steel output drive shaft.

g. Spring loaded manual disconnect.

h. Steel “critter” plate to prevent entry of ground pests.

3. Standard electrical components shall include as a minimum:

a. 1 HP motor with thermal overload protection in 208/240 VAC single phase.

b. Solid state logic controls featuring 15 diagnostic L.E.D. indicators and auto-close timer (1 second to 9 minutes).

c. Inherent, fully adjustable motor over-current sensing to detect obstructions via precision 24 turn potentiometer, with separate adjustments for opening and closing directions.

d. Controller housed in zinc plated control box with separate box provided for connection of field power.

e. Power On/Off switch.

f. Contacts for opening, closing and reversing accessories, as well as contact and non-contact obstruction sensing devices. 24 VAC and 24 VDC available on terminal strip to power accessory devices, provided by non-circuit board mounted transformer with minimum 40VA rating.

g. Four adjustable limits with precision snap-action type limit switches to control gate position, mounted inside a separate four switch limit box.

h. Master/slave or stand alone capable with dip switch selection. Three wire twisted pair shielded cable required.

i. The sliding gate shall be equipped with a gate position switch.

4. Safety Accessories:

a. Devices shall be provided and installed to interrupt closing operations which could contact a person or vehicle such as photoelectric sensors, vehicle detectors, proximity sensors, or contact edges.

b. A rotating beacon shall be illuminated when the gate is in operation.

c. An audible alarm shall be equipped to alert the Owner of any error which occurs during operation, such as failure to close completely.

PART 2 PRODUCTS

2.1 MATERIALS

1. The materials for Chain Link Fence conform to the following requirements:

   General:

   All gage measurements of finished wire shall be United States Steel Wire Gage or equivalent. Tolerance for wire sizes shall be as specified in AASHTO M-181. Materials for this work shall meet the following requirements:

2. Fabric:

   Wire Fencing shall be composed of woven wire of the chain link type. It shall be not less than the height specified on the plans or in the project specifications and shall be constructed of not smaller than No. 9 gage wire. The wire shall be woven to form a continuous fabric having 2-inch mesh. The chain link fabric shall have a knuckled finish on both edges. The Trade Contractor shall have the option of using either aluminum chain link fence or aluminum-coated chain link fence. However, only one type of chain link fence shall be used on the project.

Aluminum-Coated Steel Fabric: The base metal of the fabric shall be of steel wire having a minimum tensile strength of 80,000 psi, coated with aluminum alloy applied at the rate of not less than 0.40 ounces/square foot of uncoated wire surface.

Aluminum Alloy Fabric shall meet the requirements of ASTM B211, Alloy 6061 wire having a minimum tensile strength of 50,000 psi

3. Metal Posts and Rails:

   Metal posts shall be straight, true to section and of sufficient length to enable the post to be encased for a depth of 2 feet 8 inches in a concrete footing which shall have a depth 3 feet below ground.

   All posts, rails, braces, anchors, plates and other devices shall meet one on the following specification. Galvanized material shall be made of steel of a standard commercial type, hot-dip galvanized with a zinc coating weighing not less than 2.0 ounces/square foot when tested in accordance with AASHTO T65 or shall be in accordance with AASHTO M181, Class 2.

   The Trade Contractor shall provide a Materials Certificate in accordance with Section 01 33 00 Submittal Procedures for materials conforming to AASHTO M181, Class 2.

   All aluminum coated steel posts and rails shall meet ASTM F669, minimum yield strength 50,000 psi, for industrial chain link fence. The posts and rails shall be manufactured by roll forming aluminum coated steel strip and electric resistance welding into tubular form. The outside of the weld area shall be metabolized with commercially pure aluminum to a thickness sufficient to provide resistance to corrosion equal to that of the remainder of the outside of the tube. The aluminum coating weight on the outer and inner surfaces shall be a minimum of 0.75 ounces/square foot, Triple spot test 0.70 ounces/square foot, single spot test, as measured in accordance with ASTM A428.

   Aluminum Alloy shall meet the requirements of FS RR-F-00191.

4. Fittings:

   These shall be malleable irons, pressed steel, or aluminum alloy. The fittings shall be either hot-dip galvanized or aluminum alloy.

   a. Hot-dip galvanizing shall meet the requirements of ASTM A 153.

   b. Aluminum alloy shall meet the requirements of FS RR-F-00191.

5. Tension and Tie Wire:

   a. Tension wire for steel fence shall be coil spring steel not less than 7 gage. The base material shall have a minimum tensile strength of 80,000 psi with an aluminum coating applied at a rate of 0.40 ounces/square foot of surface area. Aluminum tension wire shall not be less than 6 gage 6061-T6 or 5052-H38 Aluminum Alloy.

   b. Wire clamps for fastening fabric to line posts shall not be less than 6 gage. Tie wires or hog rings used to fasten the fabric to the top rail or tension wire shall be not less than 9 gage aluminum for aluminized or aluminum fabric fence. Aluminized steel hog rings for aluminized fabric shall not be less than 11 gage.

6. Gates: Gates shall be of the same type of materials used for the chain link fence.

7. General materials notes:

   a. When aluminum-coated steel fabric is used, the posts and hardware will be galvanized.

   b. When aluminum fabric is used, the posts and hardware will be aluminum.

B. The materials for the grounding system shall be as indicated on the plans, as required by CTDOT PM, or as required by Manufacturer.

C. The materials for cantilever sliding gate shall be:

1. Structural Gate Frame:

   The gate frame shall be fabricated from 6063-T6 aluminum alloy extrusions. The top member shall be a 3-inch x 5-inch aluminum structural channel/tube extrusion weighing not less than 3.0 lb/lf. To maintain structural integrity this frame member shall be "keyed" to interlock with the "keyed" track member. If fabricated as a single horizontal piece, the bottom member shall be a 2-inch x 5-inch aluminum structural tube weighing not less than 2.0 lb/lf. If fabricated in two horizontal pieces, the bottom member shall be a 5-inch aluminum structural channel weighing not less than 2.65 lb/lf, and the two horizontal pieces or sections shall be spliced in the field.

2. Vertical Members:

   The vertical members at the ends of the opening portion of the frame shall be "P" shaped in cross section with a nominal base dimension of no less than 2-inch x 2-inch and weighing not less than 1.6 lb/lf. The intermediate vertical members shall alternate between 2-inch x 2-inch and 1-inch x 2-inch in cross section weighing not less than 1.1 lb/lf and 0.82 lb/lf respectively.

3. Intermediate 1-inch x 2-inch vertical members weighing not less than .82 lb/lf shall alternate between 2-inch x 2-inch major members.

4. Splicing: A 1/4-inch x 5-inch x 24-inch galvanized steel splice plate shall be used to secure the two bottom channel members together utilizing eight (8) plated carriage bolts with lock nuts. The top members will be spliced together using a 1/4-inch x 2-inch x 24-inch aluminum splice plate secured with six (6) drive rivets on one side and welded to the top member on the other side. The track is overlapped onto the opposing section in an alternating fashion, interlocking with the top primary member.

5. Gate Track:

   The gate shall have a separate semi-enclosed “keyed” track, extruded from 6005A-T61 or 6105 T5 aluminum alloy, weighing not less than 2.9 lb/lf. Track members are to be located on each side of the top member. When interlocked and welded to the “keyed” top member, it forms a composite structure with the top of the gate frame. Welds are to be placed alternately along the top and side of the track at 9-inch centers with welds being a minimum of 2-inch long.

6. All welds on the gate frame shall conform to Welding Procedure Specification and Procedure Qualification Record to insure conformance to the AWS D1.2 Structural Welding Code. All individual welders shall be certified to AWS D1.2 welding code.

7. Gate Mounting:

   The gate frame is to be supported from the track by four (4) swivel type, self-aligning, 4 wheeled, sealed lubricant, ball-bearing truck assemblies.

   The bottom of each support post shall have a bracket equipped with a pair of 3-inch UHMW guide wheels Wheel cover protectors shall be included with bottom guides to comply with UL325.

   Gap protectors shall be provided and installed, compliant with ASTM F 2200-05.

   Diagonal Bracing: Diagonal "X" bracing of 3/16-inch minimum diameter stainless steel aircraft cable shall be installed throughout the entire gate frame.

8. The gate shall be completed by installation of approved filler as specified.

9. Chain Link:

   2-inch x 2-inch x 9 gauge aluminized steel chain link fabric shall extend the entire length of the gate (counterbalance must also have fabric to prevent reach through and comply with ASTM F 2200.) Fabric shall be attached at each end of the gate frame by standard fence industry tension bars and tied at each 2-inch x 2-inch vertical member with standard fence industry ties.

   The portion of the gate that fills the opening shall be topped by one additional foot of three strand barbed wire.

10. Posts:

    Double sets of support posts shall be minimum 4-inch O.D. round Schedule 40 or 4-inch x 4-inch x 3/16-inch wall square steel tubing, grade 500. Gate posts shall be galvanized or coated and supported in concrete footings as specified by the CTDOT PM.

11. Finish:

    Gate to be mill finish aluminum or color coated with polyester powder as specified. If powder coated, the gate (including track member) and all accessories shall be pretreated chemically by sand blasting or other acceptable method to ensure proper coating adherence.

2.2 MANUFACTURERS

A. The Chain Link Pedestrian Gate system and Chain Link Cantilever Sliding Gate Systems shall be manufactured by Tymetal Corp., HySecurity, Jamieson or approved equal.

PART 3 EXECUTION

3.1 EXAMINATION

A. Verify that construction area for chain link fence and gates are to the lines and grades indicated on the plans and ready for the Work as indicated.

3.2 PREPARATION

A. Layout the location indicated on the plans for chain link fence and gates prior to construction.

3.3 CONSTRUCTION

A. The posts shall be spaced in line of fence not further than 10 feet on centers. Intermediate or line posts, except where indicated on the plans, may be driven by mechanical means. A suitable driving cap shall be used to insure that no damage is caused to the post and/or galvanization. Posts not driven, and all other type posts shall be set in portland cement concrete acceptable to the CTDOT PM.

B. In earth, the hole for the concrete footing shall extend at least 4 inches below the bottom of the post but not less than 9 inches in diameter for all line posts and 12 inches in diameter for terminal, pull or corner posts. The tops of the concrete footings shall be crowned to shed water.

C. When ledge rock is encountered, the posts shall be set in holes drilled into rock at least 12 inches in depth and grouted or otherwise firmly held in correct position.

D. For fence 5 feet in height or less where runs of fence are 100 feet or over, end posts shall be braced. All corner posts where runs are over 100 feet in either direction shall have two braces. For fence more than 5 feet in height, end posts shall be braced; and corner posts shall have two braces.

E. Pull posts with two braces shall be provided for all heights where changes in horizontal or vertical alignment of ten (10) degrees or more occur.

F. Where braces are required, they shall be spaced as indicated on the plans.

G. Braces shall be securely fastened to posts by suitable connections and trussed from line post back to post requiring bracing with 3/8-inch round rod, having a turnbuckle adjustment.

H. Where a top rail is used, it shall pass through the base of the line post cap and form a continuous brace from end to end of fence. The rail shall be provided with couplings approximately every 20 feet.

I. The couplings shall be of the outside-sleeve type and at least 7 inches long, one coupling in every five to have a heavy spring to take up expansion and contraction in the top rail.

J. Fabric shall be fastened to line posts with bands or wire clamps of No. 6-gage aluminized or PVC coated steel wire 4 3/4 inches long. These bands shall be spaced approximately 14 inches

apart. The fabric shall be fastened to the top rail with tie wires. These tie wires shall be 6 1/4 inches long, spaced approximately 24 inches apart.

K. If a top rail is not specified, a top tension wire shall be provided. The tension wire shall be one continuous length between pull posts. Sufficient tension shall be applied to provide a wire without a visible sag between posts. Tension wires shall be tied or otherwise fastened to end, gate, corner or pull posts by a method acceptable to the CTDOT PM. Ties or clips shall be provided for attaching the tension wire to the fabric at intervals not exceeding 2 feet.

L. Where it is not practicable to conform the fence to the general contour of the ground, as at ditches, channels, etc., the opening beneath the fence shall be enclosed with chain link fabric and sufficiently braced to preclude access, but not to restrict the flow of water.

M. Fabric shall be fastened to the end of the gate frames by stretcher bars and fabric bands, and to the top and bottom of the gate frames by tie wires in the same manner as specified for the chain link fence fabric.

N. The drop bar locking device for swing gates shall be provided with a footing of portland cement concrete crowned at the top to shed water and provided with a hole to receive the locking bar. A heavy-duty padlock with 2 keys shall be furnished by the Trade Contractor for each gate or set of double gates. The size of the footing and depth of penetration of the locking bar into the footing shall be as specified by the manufacturer of the locking device.

END OF SECTION 32 31 13

SECTION 32 33 13 – SITE BICYCLE RACKS

PART 1 GENERAL

1.1 SECTION INCLUDES

A. Furnishing and installing bicycle racks of the size and type called for at the location shown on the plans or as directed by the Engineer.

1.2 SUBMITTALS

A. See Section 01 33 00 – Submittal Procedures and Section 01 33 00.13 – Document Control, for submittal requirements for this work.

PART 2 PRODUCTS

2.1 MATERIALS

A. Bicycle Rack: Du-Mor Inc. model 125-20 with S-2 surface mounting and hot dipped galvanized finish with the specifications noted on the plans or approved equal.

PART 3 EXECUTION

3.1 EXAMINATION

A. Verify that mounting surface is free from defect and ready for the Work are as indicated.

3.2 PREPARATION

A. Layout the location indicated on the plans for the bicycle rack prior to installation.

3.3 INSTALLATION

A. The bicycle rack shall be installed plumb, level, true, neat, rigid, and in accordance with manufacturer's instructions, the approved shop drawings, and these specifications.

B. Field welding shall not be allowed without prior approval. All exposed edges shall be smooth, free from burrs, slivers and other projections and neatly finished. All clamps used to install the bicycle rack shall be adequately padded to prevent scarring to the material surfaces. The bicycle rack materials shall be adequately protected to prevent scarring or damaging of the various surfaces during shipment.

C. The Trade Contractor shall remove all excess and packaging materials, dispose of excess and packaging materials, and restore the work area to its original condition.

3.4 REPAIR AND RESTORATION

A. If the Trade Contractor's work results in any damage, it will be his responsibility to replace the damaged items or properties to the Engineer's satisfaction. Any costs involved will be borne solely by the Trade Contractor.

END OF SECTION 32 33 13

SECTION 32 33 43.23 – SITE BOLLARDS

PART 1 GENERAL

1.1 SECTION INCLUDES

A. Description of work: The work under this item shall consist of installing concrete-filled steel pipe bollards with durable plastic bollard covers at the locations shown on the plans or as directed by the Engineer, in accordance with these specifications.

B. The work under this item shall consist of the installation of removable round post drop-in steel bollards and ground sleeves at the locations shown on the plans or as directed by the Engineer. A galvanized filler cover with removal tool shall be provided for each removable bollard installed.

1.2 RELATED REQUIREMENTS

A. Section 31 23 16 Excavation, for excavation requirements.

B. Section 03 20 00 Concrete Reinforcing, for concrete reinforcing requirements.

C. Section 03 30 00 Cast-in-Place Concrete, for concrete requirements

D. Section 31 23 23 Fill, for compacted granular fill requirements

PART 2 PRODUCTS

2.1 MATERIALS

A. Steel Pipe: 6-inch I.D. diameter, ASTM A-53 Schedule 40, galvanized to meet ASTM A 123/A 123M, or A 153/a 153M, whichever shall apply.

B. Plastic Bollard Cover: Polyethylene Thermoplastic (HDPE) tubes with ultra-violet resistance and anti-static properties, nominal thickness 0.25 inches, sized for steel pipe diameters with two reflective bands.. Cover color is OSHA yellow. Manufacturer to be Ideal Shield from Detroit, MI or approved equal

C. Removable steel bollard shall be Non Locking Drop-in Series model RFP6648R by TrafficGuard or approved equal.

D. Galvanized ground sleeve shall be model D16 by TrafficGuard Direct, Inc. or approved equal.

PART 3 EXECUTION

3.1 EXAMINATION

A. Verify the locations as indicated on the plans is ready for the work as indicated.

3.2 PREPARATION

A. Layout the locations of the bollards as indicated on the plans and ensure site access can be maintained.

3.3 CONSTRUCTION

A. Excavate the location to a minimum depth of 3-foot and minimum diameter of 24-inch for footing construction.

B. Place 6-inch Compacted Granular Fill at base of excavated footing.

C. Install pipe plumb to a height above grade of 3-foot.

D. Pour the concrete footing in accordance with Section 03 30 00 Cast-in-Place concrete except as modified here-in. Use concrete to grade and the fill pipe to the top. The footing shall be crowned to shed water.

E. Install plastic bollard cover.

END OF SECTION 32 33 43.23

SECTION 32 91 19.13 – TOPSOIL PLACEMENT AND GRADING

PART 1 GENERAL

1.1 SECTION INCLUDES

A. Description: This work shall consist of furnishing, placing and shaping topsoil in areas shown on the plans or where directed by the Engineer. The topsoil shall be placed to a depth of 4-inches unless stated otherwise in the trade contract.

1.2 SUBMITTALS

A. See Section 01 33 00 – Submittal Procedures and Section 01 33 00.13 – Document Control for submittal requirements for this work.

1.3 RELATED REQUIREMENTS

A. Section 01 57 13 Temporary Erosion and Sediment Control

B. Section 31 23 23 Fill..

C. Section 32 92 19 Seeding

PART 2 PRODUCTS

2.1 MATERIALS

A. The materials for this work shall conform to the following requirements:

Soil Material to be used for topsoil backfill shall be one of the following textural classes: Loamy sand, with not more than 80% sand

Sandy loam

Loam

Clay loam, with not more than 30% clay

Silt loam, with not more than 60% silt

Sandy clay loam, with not more than 30% clay

B. Planting soil shall be premixed, consisting of approximately 50 % topsoil, 25 % compost or peat, and 25% native soil. Planting soil shall be loose, friable, and free from refuse, stumps,

roots, brush, weeds, rocks and stones 2-inches in diameter. In addition, the material shall be free from any material that will prevent proper development and plant growth.

(a) For ericaceous plants and broad-leaved evergreens requiring an acid soil, planting soil shall have a true pH of 4.5 to 5.5. If it has not, it shall be amended by the Trade Contractor at his own expense to the proper pH range by mixing with sulphur.

(b) Planting soil for general planting of nonacid-loving plants shall have a true pH value of 5.6 to 6.5. If it has not, it shall be amended by the Trade Contractor at his own expense to the proper pH range by mixing with dolomitic limestone.

C. The amount of either sulphur or limestone required to adjust the planting soil to the proper pH range (above) shall be determined by the Engineer on the basis of agronomic tests. The sulphur shall be commercial or flour sulphur, unadulterated, and shall be delivered in containers with the name of the manufacturer, material, analysis and net weight (mass) appearing on each container.

D. The Engineer reserves the right to draw such samples and to perform such tests as he deems necessary to assure that these specifications are met.

E. Agricultural ground dolomitic limestone shall conform to the standards of the Association of Official Agricultural Chemists, and must comply with all existing State and Federal regulations.

The material must comply with the following gradation:

Square Mesh Sieves	Percent Passing By Weight
Pass #10	100
Pass #20	90
Pass #100	40

The minimum calcium carbonate equivalent shall be 90

The Engineer reserves the right to draw such samples and perform such tests as he deems necessary to assure that these specifications are met.

PART 3 EXECUTION

3.1 EXAMINATION

A. Verify that the construction area for topsoil installation is to the lines and grades indicated on the plans and ready for the Work as indicated.

3.2 PREPARATION

A. Layout the location indicated on the plans for topsoil placement prior to construction.

3.3 CONSTRUCTION

A. The Trade Contractor shall notify the Engineer of the location of the topsoil at least 15 calendar days prior to delivery. The topsoil and its source shall be inspected and approved by the Engineer before the material is delivered to the project. Any material delivered to the project, which does not meet specifications or which has become mixed with undue amounts of subsoil during any operation at the source or during placing and spreading, will be rejected and shall be replaced by the Trade Contractor with acceptable material.

B. The areas on which topsoil is to be placed shall be graded to a reasonably true surface. Topsoil shall then be spread and shaped to the lines and grades shown on the plans, or as directed by the Engineer. The required depth to which the topsoil is to be placed is to be the depth after settlement of the material has taken place. All stones, roots, debris, sod, weeds and other undesirable material shall be removed. After shaping and grading, all trucks and other equipment shall be excluded from the topsoiled area to prevent excessive compaction. The Trade Contractor shall perform such work as required to provide a friable surface for seed germination and plant growth prior to seeding.

C. During hauling and spreading operations, the Trade Contractor shall immediately remove any material dumped or spilled on the shoulders or pavement.

D. It shall be the Trade Contractor's responsibility to restore to the line, grade and surface all eroded areas with approved material and to keep topsoiled areas in acceptable condition until the completion of the construction work.

END OF SECTION 32 91 19.13

SECTION 32 92 19 - SEEDING

PART 1 GENERAL

1.1 SECTION INCLUDES

A. The work included in this item shall consist of providing an accepted uniform stand of established perennial turf grasses by furnishing and placing fertilizer, seed, and mulch on all areas to be treated as shown on the plans or where designated by the Engineer.

1.2 RELATED REQUIREMENTS

A. Section 32 91 19.13 Topsoil Placement and Grading

B. Section 01 57 13 Temporary Erosion and Sediment Control

1.3 SUBMITTALS

A. Trade Contractor shall submit affidavit forms for the seed mixture and for the fertilizers.

PART 2 PRODUCTS

2.1 SEED MIXTURE

A. Seed Mixture:

1. The grass seed mixture shall conform to the following:

Species	Proportion by Weight (mass) Pounds	Minimum Purity (precent)	Minimum Germination (precent)
Chewings Fescue, (Festuca Rubra Var Commutata) Certified Variety. Jamestown Atlanta, Victory Shadow or Certified Equal Variety, Name the Variety	35	97	80

Species	Proportion by Weight (mass) Pounds	Minimum Purity (precent)	Minimum Germination (precent)
Hard Festuca (Festuca Longifolia) Certified Variety. Reliant, Sparton, Scaldis or Equal Certified Variety, Name the Variety	30	96	85
Colonial Bentgrass, (Agrastis Tenuis) Certified Variety. Highland or Equal Certified Variety, Name the Variety.	5	95	90
Birdsfoot Trefoil, (Lotus Corniculatus), Variety Arvenis, Certified Variety. Empire or Equal Low Growing Variety, Name the Variety.	10	96	90
Pernnial Ryegrass (Lolium Perenne) Truf Type, Certified Variety. Name the Variety.	20	98	90

2. The Birdsfoot Trefoil will be inoculated before planting. Under no circumstances should annual Ryegrass, Italian rye or any other seed be added to the seed mixture.
3. The "temporary" grass seed shall be perennial ryegrass (Lolium perenne) or an improved variety thereof, such as Manhattan, having a minimum purity of 98% and a minimum germination of 90%.

   The seed mixture shall be delivered in new, clean, sealed containers. Labels and contents shall conform to the State of Connecticut and Federal regulations. Seed shall be subject to the testing provisions of the AOSA.

   The seed shall be delivered to the project accompanied by a properly executed affidavit for each type and shipment of seed. The affidavit shall be of the form provided herein. The Designer reserves the right to take such samples to make such tests as he may deem necessary to insure compliance with these specifications. The trade contractor shall supply such addition acceptable material and perform such work as required to rectify any deficiencies.

Form for Affidavit - Seed (Official Stationary of Supplier)

_____

_____Date _____

To Whom It May Concern:

I herby certify that _____pounds(kilograms) of seed mixture, lot number_____(Label attached) has been sold and delivered to

_____

_____

For_____

_____

for._____

_____(Contractors Name)_____

Connecticut Department of Transportation Project numbers 300-0088 & 301-0124 at New Haven, Connecticut.

The material was delivered on_____

The labels and contents meet all State of Connecticut and Federal Regulations. The mixture conisists of: (state component parts, proportions, minimum purity, minimum germination.)

Signature_____

Company Official

_____

(state component parts, proportions, minimum purity, minimum germination)

Signature_____

Company Official

Notary Public Signature and Seal._____

Notary Public

Signature _____

Expires_____

B. Fertilizer: Fertilizer shall be commercial grade granular 10-10-10 fertilizer. The fertilizer shall be delivered to the project in new, clean, sealed containers which bear a label fully describing the contents, the chemical analysis of each nutrient, the fertilizer grade, the net bulk, the brand, and the name and address of the manufacturer. The fertilizer and labels shall conform to all existing State and Federal regulations, and shall meet the standards of the AOAC.

The delivery of each shipment of fertilizer to the project shall be accompanied by a properly executed and acceptable affidavit of the form shown herein. The affidavit shall be submitted to the Engineer. The Engineer reserves the right to draw such samples and perform such tests as may be deemed necessary to insure compliance with these specifications.

Form for Affidavit—Fertilizers (Official Stationery of Supplier)

Date ……...

To Whom It May Concern:

I hereby certify that I have sold and delivered ……..…tons of commercial fertilizer of ……..…grade. This material is designated as our batch number(s)……

and was delivered to…….

for …….

(Contractor's Name)

Connecticut Department of Transportation Project Numbers 300-0088 & 301-0124 at New Haven, Connecticut. The material was delivered on _____. The labels and contents meet all State and Federal regulations.

(List analyses of each major plant nutrient as percent by weight (mass).)

Signature _____

Company Official

Notary Public Signature and Seal…

Signature_____

Expires_____

C. Should the material fail to conform to these specifications, the Trade Contractor shall be responsible to supply additional acceptable material and perform such work necessary to rectify the deficiencies.

PART 3 EXECUTION

3.1 EXAMINATION

A. Verify that prepared soil base is ready to receive the work of this Section.

3.2 PREPARATION

A. Place topsoil and grade in accordance with Section 32 91 19.13.

3.3 CONSTRUCTION

Construction Methods shall be those established as agronomically acceptable and feasible and which are approved by the Engineer.

A. Preparation of the Seedbed:

1. Level areas, medians, interchanges and lawns: These areas shall be made friable and receptive for seeding by disking or by other approved methods to the satisfaction of the Engineer. In all cases the final prepared and seeded soil surface shall meet the lines and grades for such surface as shown in the plans, or as directed by the Engineer.

2. Slope and Embankment Areas: These areas shall be made friable and receptive to seeding by approved methods which will not disrupt the line and grade of the slope surface. In no event will seeding be permitted on hard or crusted soil surface.

3. All areas to be seeded shall be reasonably free from weeds taller than 3-inches (75 millimeters). Removal of weed growth from the slope areas shall be by approved methods, including hand-mowing, which do not rut or scar the slope surface, or cause excessive disruption of the slope line or grade. Seeding on level areas shall not be permitted until substantially all weed growth is removed. Seeding on slope areas shall not be permitted without removal or cutting of weed growth except by written permission of the Engineer.

B. Seeding Season: The calendar dates for seeding shall be:

Spring—March 15 to June 15

Fall—August 15 to October 15

All disturbed soil areas shall be treated during the seeding seasons as follows:

1. Areas at final grade: Seeding will be accomplished.

2. "Out-of-season" seedings shall be performed in the same manner as "in-season" seedings. Since acceptable turf establishment is less likely, the Trade Contractor shall be responsible for "in-season" reseeding until the turf stand conforms to subarticle 3.3.E of this specification.

3. During "out-of-season" periods unseeded areas shall be treated in accordance with Section 01 57 13 Temporary Erosion and Sediment.

C. Seeding Methods: The grass seed mixture conforming to this specification Section 32 92 19 shall be applied by any agronomically acceptable procedure. The rate of application shall be no less than 175 pounds per acre.

Fertilizer conforming to this specification shall be initially applied at a rate of 320 pounds per acre during or preceding seeding. When wood fiber mulch is used, it shall be applied in a water slurry at a rate of 2,000 pounds per acre with or immediately after the application of seed, fertilizer and limestone. When the grass seeding growth has attained a height of 6 inches, the specified areas designated herein shall be mowed to a height of 3 inches. Following mowing, all

seeding grass areas (mowed and un-mowed) shall receive a uniform application of fertilizer hydraulically placed at the rate of 320 pounds per acre.

D. Compaction: The Trade Contractor shall keep all equipment and vehicular and pedestrian traffic off areas that have been seeded to prevent excessive compaction and damage to young plants. Where such compaction has occurred, the Trade Contractor shall rework the soil to make a suitable seedbed; then re-seed and mulch such areas with the full amounts of the specified materials.

E. Stand of Perennial Turf Grasses: The Trade Contractor shall provide and maintain a uniform stand of established turf grass species having attained a height of 6 inches consisting of no less than 100 plants per square foot throughout the seeded areas until the entire project has been accepted.

F. Establishment: The Trade Contractor shall keep all seeded areas free from weeds and debris, such as stones, cables, baling wire, and he shall mow at his own expense, on a one-time-only basis, all slopes 4:1 or less (flatter) and level turf established (seeded) areas to a height of 3-inches when the grass growth attains a height of 6 inches. Clean-up shall include, but not be limited to, the removal of all debris from the turf establishment operations on the shoulders, pavement, and/or elsewhere on adjacent properties publicly and privately owned.

END OF SECTION 32 92 19

SECTION 33 01 30.16 – TV INSPECTION OF SEWER PIPELINES

PART 1 - GENERAL

1.1 SECTION INCLUDES

A. Inspection of all existing sewer pipelines using color closed circuit television (CCTV) camera, and document the record of the inspection in DVD format with audio location and date information, video title information, continuous tape counter and provide paper and digital copies of all inspection logs. Television inspection shall be made prior to connecting to new force main to existing manhole. The limits gravity sewer to be inspected shall be from existing manhole number 362 near the intersection of Sargent Drive and Church Street Extension to the rail yard forcemain discharge manhole in Brewery Street (manhole 40) near UI Poles 10406 and 12039 as shown on plan sheets C1.43 and C1.48 within DOT project 301-0039 or as ordered by the CTDOT PM.

PART 2 - PRODUCTS

2.1 MATERIALS

A. The materials for the work shall conform to Greater New Haven Water Pollution Control Authority requirements or as ordered by the CTDOT PM and as specified herein.

B. Television Inspection Camera(s): Equipped with rotating head, capable of ± 275-degree rotation from horizontal and 360-degree rotation about its centerline.

1. Minimum Camera Resolution: 400 vertical lines and 460 horizontal lines, picture quality and definition shall be to the satisfaction of the CTDOT PM.

2. Camera Lens: Not less than 140 degree viewing angle, with automatic or remote focus and iris controls.

3. Focal Distance: Adjustable through range of 6 inches to infinity.

4. Camera(s) shall be intrinsically safe and operative in 100 percent humidity conditions.

5. Lighting Intensity: Remote-controlled and adjusted to minimize reflective glare.

6. Lighting and Camera Quality: Provide clear, in-focus picture of entire inside periphery of sewer. A reflector in front of the camera may be required to enhance lighting in large diameter pipe.

7. Height adjustment: Use a camera with camera height adjustment so that the camera lens is always centered at one-half the inside diameter, or higher, in the pipe.

C. Footage Counter: Measures distance traveled by camera from the centerline of the starting manhole, accurate to two-tenths of a foot over the entire length of the section being inspected.

D. Video Titling: Video equipment shall include genlocking capabilities to extent that computer generated data (such as footage, date, and size) as determined by SDR, can be overlaid onto video, and be indicated on television monitor and permanently recorded on inspection videotape.

E. Recording: All recordings are to be in digital format.

1. Image Capture: Capture color still shots of video recordings for all defects encountered. Digitized picture images shall be stored and be exportable as JPEG formats.

2. Video Capture: Full time live video and audio files shall be captured for each pipe segment and lateral inspected. The files shall be stored in industry standard MPEG format viewable from a DVD on an external personal computer that utilizes Microsoft Media Player, version 9.0 to view the recording. The MPEG video shall be ISO-MPEG Level 1 (MPEG-1) coding with a resolution of 352 pixels (x) by 240 pixels (y) and an encoded frame rate of 29.97 frames per second. System shall perform an automatic disk image/file naming structure to allow saved video/data sections to be “burned” to DVDR format. It shall have the capability of “burning” a minimum of 120 minutes of recording to the DVDR media. The video recording shall be free of electrical interference and shall produce a clear and stable image. The audio recording shall be sufficiently free of background and electrical noise as to produce an oral report that is clear and discernable. The digital recordings and inspection data shall be cross-referenced to allow instant access to any point of interest within the digital recording

PART 3 - EXECUTION

3.1 CONSTRUCTION METHODS

A. The methods for the work shall conform to Greater New Haven Water Pollution Control Authority requirements or as ordered by the CTDOT PM and as specified herein.

B. The Trade Contractor shall provide qualified and experienced personnel and all necessary equipment, tools and materials and all incidentals required to perform Television Inspection according to the requirements of this specification.

C. SUBMITTALS

1. DVD and inspection logs will be reviewed to determine if quality of CCTV image is acceptable, and if defects were properly identified and documented.

2. Modify equipment and/or inspection procedures to achieve report material of acceptable quality.

3. Do not commence work prior to approval of report material quality by the CTDOT PM Upon acceptance; report material shall serve as standard for remaining work.

4. Maintain copy of all inspection documentation (tapes, databases, and logs) for duration of work and warranty period.

D. LEGAL, HEALTH AND SAFETY REQUIREMENTS

The Trade Contractor shall observe all federal, state and local laws, ordinances, policies, practices and regulations. In addition, the Trade Contractor agrees to promptly procure all necessary approvals, licenses and permits, pay all charges and fees, and give all notices necessary and incident to the due and lawful prosecution of the work.

The Trade Contractor shall conduct the work at all times in such a manner as to insure the least possible obstruction to traffic. The convenience of the general public and of the residents along and adjacent to the roadway shall be provided for in an adequate and satisfactory manner as the CTDOT PM may direct.

All equipment and Materials shall be placed or stored in such locations so as not to be or to create the danger of becoming a hazard to the traveling public. No section of road shall be closed to the public except by permission of the City of New Haven.

The safety provisions of applicable laws, building, construction and fire safety codes and the latest edition of the "Construction Safety Code, State of Connecticut, Labor Department", approved by the State Labor Commissioner, shall be complied with at all times.

The Trade Contractor shall obtain the appropriate permits and approvals Perform operations in strict accordance with OSHA and equipment manufacturers' safety requirements. Particular attention is drawn to safety requirements involving entering confined spaces.

E. ACCEPTANCE BY THE CTDOT PM

Final Acceptance of the work shall be determined by the CTDOT PM based upon the verification that the sanitary sewer television inspection has been successfully completed in accordance with this specification. If the CTDOT PM determines that the television inspection has not been completed in accordance with this specification, the Trade Contractor shall repeat the television inspection process until final acceptance is obtained. Cost to repeat the television inspection shall be the responsibility of the Trade Contractor.

END OF SECTION 33 01 30.16

SECTION 33 22 00 – WATER DISTRIBUTION SYSTEM

PART 1 - GENERAL

1.1 INTRODUCTION

A. The Work specified in this Section, includes furnishing and installing a water distribution system, including a precast concrete meter vault, at the locations and to the lines, grades, dimensions, and details shown on the drawings, complete as shown, specified and directed.

1.2 DESCRIPTION

A. Work included:

1. Trench excavation of earth.
2. Preparation of bed.
3. Connection to existing utilities.
4. Installation of pipe and appurtenances.
5. Installation of meter vault.
6. Installation of fire hydrants.
7. Installation of service connections.
8. Installation of pipe restraints and thrust blocks.
9. Backfill of trench.
10. Testing of mains.
11. Disinfection of mains.

B. Related work described elsewhere:

1. Section 01 25 00 – Substitution Procedures
2. Section 01 33 00 – Submittal Procedures
3. Section 01 33 00.13 – Document Control
4. Section 01 45 00 – Quality Control
5. Section 01 55 26 – Traffic Control
6. Section 01 57 13 – Temporary Erosion and Sediment Control
7. Section 01 57 26 – Site Watering for Dust Control
8. Section 01 73 29 – Cutting and Patching
9. Section 03 20 00 – Concrete Reinforcing
10. Section 03 30 00 – Cast-in-Place Concrete
11. Section 31 11 00 – Clearing and Grubbing

12. Section 31 23 16.13 – Trenching
13. Section 31 23 19 – Dewatering
14. Section 31 23 23 - Fill
15. Section 31 35 19.17 – Geotextile (Separation-High Survivability)
16. Section 31 41 00 – Shoring
17. Section 32 11 23 – Aggregate Base Courses
18. Section 32 12 16 – Asphalt Paving
19. Section 32 33 43.23 – Site Bollards
20. Section 32 91 19.13 – Topsoil Placement and Grading
21. Section 32 92 19 – Seeding
22. Section 26 05 33 – Raceway and Boxes for Electrical Systems

1.3 QUALITY ASSURANCE (See Section 01 45 00 – Quality Control)

A. Provide one person who shall be present at all times during execution of the work, who is thoroughly familiar with the types of materials used and execution of the work, and who shall direct all work under this section.

B. Use all means necessary to protect materials and appurtenances before, during, and after installation including proper storage. Follow the manufacturers' recommended procedures for unloading, storage and installation where applicable.

C. In the event of damage or theft, make all repairs and replacements necessary, subject to approval by the CTDOT PM, at no additional cost to the Owner.

D. Soils Testing: Compaction tests shall be either Standard Proctor (ASTM D698) or Modified Proctor (ASTM D1557) as required in Part 3 - Execution. Trade Contractor shall engage a soils testing and inspection service for sieve analysis and compaction tests during earthwork.

E. Trade Contractor shall provide the necessary equipment or secure a testing firm to conduct pressure, leakage, disinfection, infiltration, deflection, and lamping tests on the installed utilities, and, if required, concrete testing and loaded truck test.

F. Comply with all applicable standards referenced below and all conditions required by State or local permits.

1.4 SUBMITTALS (See Section 01 33 00 – Submittal Procedures and Section 01 33 00.13 – Document Control)

A. Within 30 days after the Award of Trade Contract, and before materials and/or equipment are delivered to the site, submit to the CTDOT PM technical information on equipment to be furnished and certification of compliance with applicable standard tests for materials to be used, if materials and/or appurtenances are other than brand names specified.

B. Where the phrases "or equal" or "of equal quality" appear, substitution may be made only

by approval of the CTDOT PM. Such substitution will be considered only when submitted with full and complete technical data and information for evaluation prior to installation. (See Section 01 25 00 Substitution Procedures)

C. An independent testing company, approved by the CTDOT PM, shall obtain samples and provide sieve analysis for the granular materials to be used.

D. An independent testing company, approved by the CTDOT PM, shall provide compaction tests as required.

E. The manufacturer or supplier, shall provide current concrete design mix with a 7 day and two 28 day compressive strength tests for any concrete requiring reinforcing steel.

F. Provide minimum of 48-hour notice to CTDOT PM, and a written authorization notice to proceed from the affected utility, before interrupting any utility.

G. Submit written results of all tests on the installed utilities and appurtenances to the CTDOT PM.

H. Verify that all materials and equipment will be available in time for orderly installation during the course of the work.

I. Furnish six (6) sets of submittals for the precast concrete meter vault to the Designer for approval, prior to its production. Submittals shall contain complete, detailed shop drawings including a listing of construction materials as required indicating full compliance with the specifications. Partial submittals of shop drawings or equipment data will not be accepted, reviewed or approved.

Shop drawings shall be complete with respect to dimensions and materials of construction.

1. Structural design calculations, flotation calculations as specified.
2. Full detailed shop drawings, including all elevations and plan views.

1.5 JOB CONDITIONS

A. Pipe lengths indicated on the drawings are for information only. Furnish lengths as required.

B. Perform no pipe work in fill areas until the embankment or fill has been completed to at least 2 feet above the top of the pipe and has been properly compacted. The CTDOT PM will request compaction tests at the Trade Contractor's expense unless other arrangements are established.

C. Site Information: Data on indicated subsurface conditions are not intended as representations or warranties of accuracy or continuity between soil borings. It is expressly understood that the Owner shall not be responsible for interpretations or conclusions drawn therefrom by the Trade Contractor. Data are made available for the convenience of the Trade Contractor. Additional test borings and other exploratory work may be made by the Trade Contractor at no cost to the Owner.

D. Existing Utilities: Locate existing underground utilities in the areas of work. If utilities are to remain in place, provide adequate means of protection during earthwork operations.

1. The Trade Contractor shall contact Call Before You Dig (1-800-922-4455) or Dial 811 prior to excavation prior to excavation.

2. The Trade Contract Documents show existing underground utilities based on above ground observations or record drawings. The Trade Contractor shall anticipate that the actual location or existence of any utility may vary from that shown. Should uncharted, or incorrectly charted, piping or other utilities be encountered during excavation, consult the utility owner immediately for directions. Cooperate with the Owner and utility companies in keeping respective services and facilities in operation. Repair damaged utilities to the satisfaction of the utility owner.

3. Do not interrupt existing utilities serving facilities occupied and used by the Owner or others, except when permitted in writing by the affected utility and then only after acceptable temporary utility services have been provided.

4. Demolish and completely remove from the site existing underground utilities indicated to be removed. Coordinate with utility companies for shutoff of services if lines are active.

5. If pipe adjustment is necessary due to the locations of other utilities, secure approval from the CTDOT PM.

E. Do not change pipe sizes without securing written approval of the CTDOT PM.

F. Use of Explosives: Do not bring explosives onto the site or use in work without prior written permission from authorities having jurisdiction. Trade Contractor is solely responsible for handling, storage, and use of explosive materials when their use is permitted.

G. Protection of Persons and Property: Barricade open excavations occurring as part of this work and post with warning lights as required in Section 01 55 26 – Traffic Control as modified herein.

1. Operate warning lights as recommended by authorities having jurisdiction.

2. Protect structures, utilities, sidewalks pavements, and other facilities from damage caused by settlement, lateral movement, undermining, washout and other hazards created by earthwork operations.

H. Refer to Section 01 57 26 – Site Watering for Dust Control for dust control procedures during construction.

I. Refer to Section 31 11 00 – Clearing and Grubbing for procedures regarding the protection of existing trees and vegetation.

J. Trade Contractor shall comply with the latest rules of the Connecticut Occupational Safety and Health Administration (CONN-OSHA).

1.6 TESTING LABORATORY SERVICES (See Section 01 45 00 Quality Control)

At least 1 passing compaction test shall be conducted in each lift of trench backfill for each 20 cubic yards of material, unless other arrangements are established. The Trade Contractor shall conduct a sieve analysis for the backfill material to insure that the materials are in accordance with the specifications and that compaction requirements can be met. All testing will be run at the Trade Contractor's expense unless other arrangements are established.

1.7 METER VAULT DESIGN

A. The meter vault shall be constructed to the length, width and height as shown on the Trade Contract drawings and in accordance with the cut sheet at the end of this section. The vault shall be designed to adequately and safely support all live and dead loads to which the structure will be subjected, and to withstand all conditions which may be encountered. Structural drawings and calculations shall be prepared, signed and sealed by a Professional Engineer registered in the state of Connecticut.

B. Design calculations shall verify that the structures have been designed to withstand the burial depth, and the dead and live loads anticipated for the station. The station structures shall have adequate wall, floor and roof thickness and steel reinforcement sufficient for the depth of burial shown on the drawings. The base, flange, and bottom barrel section of the pump station shall be monolithically precast.

PART 2 - PRODUCTS

2.1 SUITABLE BACKFILL

A. Suitable backfill shall consist of on-site or borrow material of soil or soil-rock mixture free from organic or frozen material and other deleterious substances. The material shall contain no rocks or lumps larger than 3 inches in diameter. Material must be approved by the CTDOT PM prior to use.

Sieve No.	Percent Passing Sieve	Sieve (metric)
3 inches	100	75mm
No.4	40-75	4.75mm
No.100	0-12	150mm
No.200	0-6	75mm

B. Borrow material shall meet the requirements of this section and be granular in nature and show evidence of satisfactory compaction.

2.2 GRANULAR BACKFILL

Granular Backfill shall consist of broken or crushed stone, broken or crushed gravel, or reclaimed miscellaneous aggregate in conformance with the requirements of Section 31 23 23 – Fill.

2.3 PIPE BEDDING

Pipe bedding shall be No. 6 crushed or broken stone conforming to the requirements of Section 31 23 23 – Fill.

2.4 CONCRETE

Concrete shall be termed Class 'C' (3000 psi) and meet the requirements of Section 03 30 00, Cast-in-Place Concrete.

2.5 REINFORCEMENT

Reinforcing bars shall meet the requirements of Section 03 20 00.

2.6 GEOTEXTILE (SEPARATION – HIGH SURVIVABILITY)

Geotextile shall conform to the requirements of Section 31 35 19.17.

2.7 PIPING

Ductile iron pipe shall conform to the requirements of AWWA C-151. The pipe shall be Class 52 with a rated working pressure of 350 psi. Rubber gasket push-on joints conforming to AWWA C-111 shall be used. The pipe shall be cement-mortar lined in accordance with AWWA C-104. Ductile iron pipe bell restraint shall meet or exceed ANSI/AWWA C151A21.51 and ANSI/AWWA C150/A21.50 standards and shall consist of a wedge action restraint ring on the spigot joined to a split ductile iron ring behind the bell. The product shall be the Series 1700 MEGALUG restraint harness, manufactured by EBAA Iron, Inc. or approved equal. The restraint devices shall be coated using MEGA-BOND by EBAA Iron, Inc. or approved equal.

All joints shall be restrained as noted on the Drawings.

2.8 VALVES

Valves shall be AWWA approved in accordance with C-515 (resilient-seated gate valves). All valves shall open counter clockwise.

A. C-515 valves shall have ductile iron bodies, inside screws, resilient seats, and non-rising stems.

B. All bolts and nuts shall be stainless steel.

2.9 FITTINGS

Fittings shall be gray or ductile iron conforming to AWWA C-110 and have mechanical joints unless otherwise noted.

Restraint devices for mechanical joint fittings and appurtenances shall consist of multiple gripping wedges incorporated into a follower gland meeting the applicable requirements of ANSI/AWWA C110/A21.10. The product shall be the Series 1100 MEGALUG restraint harness, manufactured by EBAA Iron, Inc. or approved equal. The restraint devices shall be coated using MEGA-BOND by EBAA Iron, Inc. or approved equal.

All joints shall be restrained as noted on the Drawings.

2.10 TAPPING VALVE AND SLEEVE

The tapping sleeve will stainless steel with a connecting flange conforming to AWWA C115 and be of equal quality to Power Seal 3490MJ. All nuts and bolts used with the steel sleeve shall be AISI Type 304 stainless steel. An integral test plug will be provided with the sleeve. The valve shall be AWWA approved in accordance with C-515 (resilient-seated gate valves). All valves shall open counter clockwise. A corporation stop (Mueller 15000 or equal) will be provided in the first length for disinfection.

2.11 VALVE BOXES

Valve boxes shall be cast iron and be the extension, two piece sliding type of equal quality to Mueller H-10364. Cover shall read WATER or as otherwise noted. Valve boxes shall be provided with gate box aligners and mud caps.

2.12 HYDRANTS

Hydrants shall be the dry barrel type conforming to AWWA C-502 and be equal quality to the type specified on the Drawings. Hydrants will have National Standard Threads.

2.13 POLYETHYLENE ENCASEMENT OF PIPE

A. Polyethylene encasement shall be furnished and installed in accordance with AWWA C-105 latest revision to all piping, castings, fittings, valves, and couplings for the entire length of direct-buried ductile iron pipe to be supplied on the project.

B. The polyethylene encasement shall prevent contact between the pipe and the surrounding backfill and bedding material, but it is not intended to be completely airtight or watertight.

C. Trade Contractor shall supply eight-mil minimum thickness polyethylene tube manufactured in accordance with AWWA C-105 latest revision for encasement of ductile iron waterline.

D. Linear low-density polyethylene film shall be manufactured of virgin polyethylene material in accordance with ASTM D4976. Physical properties of finished film:

Tensile strength 3,600 psi *
Elongation 800 percent *
Dielectric strength 800 V/mil thickness minimum
Impact Resistance 600 g minimum
Propagation Tear Resistance 2,550 grams force minimum *
*Minimum in machine and transverse direction

E. Polyethylene tube to be supplied shall be black (weather resistant) in color. Tube or sheet width sizes shall be per AWWA C105 as shown on the following chart:

Nominal Pipe Diameter	Min. Polyethylene Width for Flat Tube
4”	16”
6”	16”
8”	20”
10”	24”
12”	27”

F. The polyethylene film supplied shall be clearly marked every two feet along its length with the following information in one-inch high letters:

Manufacturer's name or trademark
Year of Manufacture
ANSI/AWWA C105/A21.5
Minimum film thickness and material type
Applicable range of nominal pipe diameter size(s)
Warning – Corrosion Protection – Repair any damage.
Polyethylene adhesive tape 1-1/2-inch wide shall be used to seal joints.

2.14 WARNING/IDENTIFICATION TAPE WITH TRACER WIRE

A. Tape shall be an inert, non-metallic plastic film formulated for prolonged underground use that will not degrade when exposed to alkalis, acids and other destructive substances commonly found in soil.

B. Tape shall be puncture-resistant and shall have an elongation of two times its original length before parting.

C. Tape shall be colored to identify the type of utility intended for identification. Printed message and tape color shall be as follows:

Printed Message	Tape Color
Caution: Waterline Buried Below	Blue
Caution: Gas Buried Below	Yellow
Caution: Sewerline Buried Below	Green
Caution: Cathodic Protection Cable Buried Below	Red
Caution: Electric Line Buried Below	Red

D. Ink used to print messages shall be permanently fixed to tape and shall be black in color with message printed continuously throughout.

E. Tape shall be minimum 4 mil thick x 6-inch wide with a printed message on one side.

F. Tracer wire shall be #14 AWG solid copper UF type wire with cross-linked polyethylene insulation. The insulation shall be white or yellow in color.

G. Wire splices (at pipe tees, crosses and laterals) shall be accomplished using a direct bury silicone-filled capsule tube with standard wire nut or silicone-filled wire nut connectors of the appropriate size.

2.15 PRECAST CONCRETE METER VAULT

A. Precast Meter Vault Manufacturers:

1. Arrow Concrete
2. Oldcastle Precast
3. CT Precast
4. United Concrete Products

5. Or approved equal.

B. Concrete used in the manufacture of components shall meet the following criteria:

1. Cement shall be high early strength Portland cement. Type T11, conforming to ASTM C-150. Fine aggregate shall consist of washed natural sand conforming to ASTM Specification C-33.

2. Coarse aggregate shall consist of ¾-inch well-graded crushed stone conforming to ASTM Specification C-33.

3. Air entrainment shall be 4.5% plus or minus 1%.

4. A superplasticizer shall be used and concrete shall be placed at a slump of 6-inch plus or minus 1-inch.

5. The concrete used for the structural components shall attain a minimum 28 day compressive strength of 5,000 PSI.

C. Reinforcing steel used in the manufacture of components shall meet the following requirements:

1. Steel shall be new billet steel, deformed steel bars conforming to ASTM A-615 (latest revision), Grade 60. Welded steel wire fabric reinforcing shall conform to ASTM A-185 (latest revision).

2. Minimum cover of reinforcement shall be 3 inches, and shall conform to relevant American Concrete Institute (ACI) cover requirements

D. Each precast module shall be provided with formed male and female joints to insure accurate joint surfaces and tolerance for a watertight seal. All joints between adjoining precast modules shall be primed at the factory and sealed by the vaults manufacturer's personnel when modules are set in the field utilizing a vulcanized butyl rubber compound sealant conforming to AASHTO M-198 (latest revision). All surfaces of the precast structure shall be smooth, even and free from roughness, irregularities and other defects, and shall be suitable for receiving the interior and exterior finishes specified elsewhere herein.

E. Whenever possible, the vault's walls shall be monolithically cast with the roof and wall slabs. The vault shall have a sump which shall not be less the 4-inches deep and sized with a minimum area of 12-inches x 12-inches.

F. All wall penetrations shall be formed utilizing cast-in-place sleeves or cast in couplings, Wall sleeves shall be appropriately sized for use with a mechanical type water seal. Mechanical seals shall be "Linkseal" as manufactured by Thunderline, or equivalent.

G. The vault shall be fabricated and cast in full accordance with approved structural designs and shop drawings.

H. The entire exterior of the structure shall be coated with an asphalt sealant.

I. The water meter vault shall include an RGS conduit as specified on the plans for the water company to install wiring necessary for the water meter remote read device. Conduit shall meet the requirements specified in section 26 05 33.

2.16 ACCESS COVERS

The access covers shall be single, leaf construction and HS-20 load rated. The covers shall be constructed of 1/4-inch thick, one piece, mill finish, extruded diamond plate aluminum. A channel frame shall be provided with a 1-inch drainage coupling. The inside of the frame shall have a door support ledge on two sides both frame and ledge must be supported by the concrete. The door shall open 90 degrees and automatically lock with a stainless steel hold open arm with aluminum release handle. For ease of operation each door shall incorporate enclosed stainless steel compression spring assist, door shall shut flush with the frame. The lifting handle, hinges and all fastening hardware shall be stainless steel, flush with the door surface, and the unit shall lock with a stainless steel slam lock with removable keys. The cover shall be guaranteed against defects in material and/or workmanship for a period of ten (10) years.

2.17 ALUMINUM LADDER AND LADDER EXTENSION

The vault shall each be supplied with an aluminum (6061 -T6) wall-mount access ladder. The ladders shall be fastened to the concrete with 316 stainless expansion bolts and shall meet OSHA standard 1910.27 requirements.

The ladder rails & supports shall be all welded aluminum construction. Rails and wall supports shall be solid 3/8-inch x 2-1/2 inch flat stock, and rungs shall have a 1-1/4-inch diameter with serrated surface extruded into the rung for slip resistance. The minimum design live load shall be a single concentrated load of 200 lbs.

Rung spacing shall be uniform and not exceed 12-inches, the minimum clear length of rungs shall be 15-1/4- inches, and the distance from the center line of the rung to the nearest permanent object shall not be less than 7-inches.

The ladder extension assembly shall be constructed of aluminum and stainless steel. The aluminum housing shall mount to the ladder by means of grade 316 stainless steel channel clamps secured to the ladder rungs with grade 316 stainless steel "U" bolts. The aluminum telescoping post shall extend 42-inches above the top of the housing and lock into position with a grade 316 stainless steel pin.

PART 3 - EXECUTION

3.1 GENERAL

A. Prior to all work in this Section, become familiar with all site conditions, materials and equipment to be installed, procedures of installation and scheduling of work.

B. Do not cover any work until it has been observed by the CTDOT PM. Any such covered work will be uncovered at no additional cost.

3.2 SEPARATION OF WATER MAINS AND SEWERS

A. General:

The following factors should be considered in providing adequate separation:

1. Materials and type of joints for water and sewer pipes,
2. Soil conditions,
3. Service and branch connections into the water main and sewer line,
4. Compensating variations in the horizontal and vertical separations,
5. Space for repair and alterations of water and sewer pipes,
6. Offsetting of pipes around manholes.

B. Parallel installation:

Water mains shall be laid at least 10 feet horizontally from an existing or proposed manhole or sanitary sewer. This distance can be reduced to 5 feet for storm water. The distance shall be measured near edge to near edge. In cases where it is not practical to maintain a 10 foot separation, the reviewing authority may allow deviation on a case-by-case basis; if supported by data from the design engineer. Such deviation may allow installation of the water main closer to a sewer, provided that the water main is laid in a separate trench or on an undisturbed earth shelf located on one side of the sewer at such an elevation that the bottom of the water main is at least 18 inches above the top of the sewer.

C. Crossings:

Water mains crossing sewers shall be laid to provide a minimum vertical distance of 18 inches between the outside of the water main and the outside of the sewer. This shall be the case where the water main is either above or below the sewer. At crossings, one full length of water pipe shall be located so both joints will be as far from the sewer as possible. If the sewer main is over the water main, the first sewer pipe joints on each side of the water main must be concrete encased. Special structural support for the water and sewer pipes may be required. Water mains shall not pass through sewer manholes or be submerged in basins containing sewage or other grossly contaminated or hazardous material.

D. Exception:

The Agency of Natural Resources must specifically approve any variance from the requirements of this section when it is impossible to obtain the specified separation distances. Where sewers are being installed and separation requirements cannot be met, the sewer materials shall be water main pipe or equivalent and shall be pressure tested to ensure water tightness.

E. Force Mains:

There shall be at least a 10 foot horizontal separation between water mains and sanitary sewer force mains. There shall be an 18 inch vertical separation at crossings.

F. Underground storage tanks:

Water distribution lines shall be placed not closer than twenty five (25) feet horizontal distance from underground storage tanks.

3.3 TRENCH EXCAVATION (See Section 31 23 16.13 – Trenching)

A. Prior to opening an excavation, effort will be made to determine where underground installations are located. When the excavation approaches the estimated location of such an installation, the exact location shall be determined and when it is uncovered, proper supports shall be provided for the existing installation. Utility companies shall be contacted and advised of proposed work prior to the start of actual excavation. The Trade Contractor shall contact Call Before You Dig (1-800-922-4455) or Dial 811 prior to excavation.

B. Trees, boulders, and other surface encumbrances, involved in excavation work or in the vicinity thereof at any time during operations, shall be removed before excavating is begun.

C. In excavations, excavated or other material shall be effectively stored and retained at least 2 feet or more from the edge of the excavation.

D. Diversion ditches, dikes, or other suitable means shall be used to prevent surface water from entering an excavation and to provide adequate drainage of the area adjacent to the excavation. Water shall not be allowed to accumulate in the excavation.

E. Earth excavated shall be separated into topsoil and other clearly distinguishable soil types such that the best material may be used for backfill operations.

F. Excavate the trench 6 inches below the level of the distribution pipe and provide a minimum width for working and compacting backfill. Provide a maximum width of 12-inches beyond the outside of the pipe.

G. If ledge, boulders or large stones are encountered, remove them to provide a minimum of 6 inches of clearance on all sides of the pipe. Backfill and thoroughly compact with approved backfill, any excess material to be removed.

3.4 PIPE TRENCH BEDDING CLASSES

A. Unless otherwise directed, the pipe trench bedding shall be as detailed on the Trade Contract Documents.

B. Concrete encasement, where required by the Project Owner, shall consist of Class C concrete with a minimum encasement of 6 inches on all sides of the pipe.

3.5 PIPE INSTALLATION

A. Place bedding material below the bottom of the pipe. Smooth the bottom of the trench to provide continuous support under the pipe. Carefully lower the pipe into the trench, avoiding disturbance of the bed and trench walls, and damage to the pipe. Lay the pipe with the bells on the upgrade end.

B. Clean the coupling ring groove and install the rubber gasket. Lubricate the gasket with the lubricant supplied by the manufacturer of the pipe. Taking care to avoid the entrance of foreign material, join the sections. Check joints to insure proper seal. For ductile iron water mains install 2 brass wedges per joint, unless this requirement is waived by the municipality, or as required differently by the municipality.

C. Where a gland is used at a valve or fitting, the gland and rubber gasket will then be placed on the spigot end of the pipe. The pipe will then be pushed forward to seal the spigot end in the bell and the gasket pressed into place within the bell. The gland will then be moved into place and bolted. Tighten the bolts to a torque range of 60-90 foot pounds.

D. When pipe laying is not in progress, seal the open ends of the pipe with a water tight plug.

E. After installation of the pipe to the proper line and grade, place granular around the pipe to the top of the pipe, carefully tamping under the haunches. Backfill shall be compacted with an engine driven mechanical compactor to 95% maximum density (Standard Proctor).

F. Place the initial backfill above the pipe, ensuring the material is free of roots, stones, organic or frozen material.

G. Backfill the trenches in lifts. Compact each lift with an engine driven mechanical compactor to 90 % maximum density where the trench will not be under a paved area, and to 95% maximum density where the trench is under a paved area (Standard Proctor). If trench is located in the road bed of an existing roadway, the fill below the existing road shall be gravel to the depth shown on the detail or as ordered by the CTDOT PM. The gravel shall be compacted with an approved power roller weighing between 8 and 10 tons.

3.6 CONNECTION TO EXISTING WATER MAIN

Connection to existing water main shall be under the supervision of the municipality or water district. The Trade Contractor shall notify them and the CTDOT PM 24 hours prior to the proposed connection date.

3.7 FITTINGS AND VALVES

A. Remove all lumps, blisters and excess coating from the bell. Wire brush the inside of the bell and wipe clean.

B. Where fittings or bends require thrust blocks the trench shall be excavated to provide bearing against undisturbed soil.

C. The CTDOT PM shall be notified to observe installation of thrust blocks.

D. Place 4 mil polyethylene around the valve or fitting prior to placing concrete. Place concrete thrust blocks and anchors at all valves and fittings to the schedule shown on the Trade Contract Drawings. Do not backfill until the concrete has cured 24 hours.

3.8 HYDRANTS

A. Connect the hydrant to the main by 6 inch ductile iron pipe. A separate 6 inch gate valve will be provided for the hydrant. Set the hydrant bury line at the elevation noted on the Trade Contract Documents.

B. Place concrete around the main tee and hydrant bowl to provide thrust blocking and under the valve for anchorage as indicated on the Trade Contract Drawings. Do not backfill until the concrete has cured 24 hours. Place 2/3 cubic yard of stone around the drain port or plug the port if it is below the water table.

3.9 VALVE BOXES

A. Center the valve box over the wrench nut of the valve using the valve box aligner. Set the cover flush with the finish surface and provide a mud cap below the cover.

3.10 WARNING/IDENTIFICATION TAPE

A. Tape shall be placed at the top of the pipe zone 12-inches above and centered over the utility intended for identification.

B. Tape shall be installed with the printed side up and run continuously along the entire length of the utility intended for identification. Tape shall be installed on the main piping and all appurtenant laterals, including blowoffs, air valve assemblies, fire hydrants, and services. Tape splices shall overlap a minimum of 24-inches for continuous coverage.

C. Tape shall be installed prior to placement of the Trench Zone Backfill.

D. Tracer wire shall be installed with all water mains.

E. Wire shall be placed on the top centerline of the pipeline and shall run continuously along the entire length of pipe prior to placement of trench backfill. Wire shall be mechanically and electrically continuous throughout the pipeline, including within pipe casings.

F. Tracer wire shall be secured to the pipe at 6' intervals with plastic adhesive tape, duct tape or plastic tie straps. The wire may alternately be secured to the pipe by looping the tracer wire around itself such that tracer wire remains continuous atop the pipe during backfill operations.

G. Tracer wire access ports shall be installed in accordance with the Standard Drawings within the concrete splash pad of all fire hydrants installed as a part of the work. In addition, tracer wire may terminate within meter boxes, blow off boxes, CP test boxes or air valve enclosures as shown on the Approved Drawings or as directed by the CTDOT PM at intervals of not more than 1,000'.

H. Locations of all tracer wire access ports installed shall be noted on the field record drawings. Wire shall extend into the access port and shall terminate with a coiled 24" length of wire. All tracer wire not attached to piping shall be installed, without splices, within a conduit at a minimum depth of 24-inches in accordance with the Standard Drawings.

I. Splices shall be installed only when necessary and shall be made using wire approved connectors.

J. The Trade Contractor shall test tracer wire for electrical continuity in the presence of the CTDOT PM prior to the installation of any paving over atop pipelines or appurtenances.

K. Testing shall be accomplished using a device capable of detecting improper connections or ground fault interruptions.

3.11 PRECAST CONCRETE METER VAULT

A. Excavate to the required depth to provide for the stone base. If groundwater is encountered, provide dewatering equipment to keep the water table below the base of the vault. Place and compact the stone base to the thickness detailed on the plans.

B. Lower the base section into the excavation and carefully level. Lower each successive section into place. Provide water tight joints between sections in accordance with manufacturers' recommendations.

C. Backfill around the vault evenly in 12-inch lifts compacting to 95% maximum density (Standard Proctor). Extend the compacted backfill 6 inches above the top elevation of entering or exiting pipes.

D. Excavate for the exterior piping and conduit. Assemble the piping and conduit, place concrete anchors, anodes, thrust blocks, and complete the backfill.

3.12 TESTING WATER MAINS

A. After the pipe has been laid and 7 days after the concrete thrust blocks and anchors have been placed, the water main shall be hydrostatically tested according to AWWA C600.

B. Trade Contractor shall supply all necessary apparatus to perform the hydrostatic test.

C. Test pressure shall be 200 pounds per square inch or 1.5 times the working pressure at or near the high point in the system, whichever is greater. Test shall be a minimum of two (2) hours in duration and the test pressure shall not vary more than five (5) psi for the duration of the test.

D. Allowable leakage shall be computed by the formula: $Q = S*D*(P)^{1/2}/ 133,200$ where Q is leakage in gallons per hour, S is the length of pipe tested in feet, D is the nominal diameter of the pipe in inches, and P is the average test pressure in pounds per square inch (gauge) during the test. (AWWA C600)

E. Replace and re-test any work found to be defective.

3.12 TESTING HYDRANTS

A. After testing the water mains, open the hydrant fully and fill with water. To prevent caps from being blown off, vent air from one of the caps while it is being filled. When all the air has escaped, tighten the cap.

B. Allow the pressure to build up to main line pressure and check for leakage at flanges, nozzles and the operating stem.

C. Close the hydrant, remove one nozzle cap and place the palm of your hand over the opening. Drainage should create a noticeable suction.

3.13 DISINFECTION

A. Prior to being put into service, water mains shall be disinfected according to AWWA Specification C-651.

B. The new line shall be flushed at a velocity of not less than 2.5 feet per second (open 2 1/2 inch hydrant connection). Flush for a period determined by the CTDOT PM for the length of main to be disinfected.

C. Chlorination shall be accomplished by introducing a hypochlorite solution with a concentration of 50 parts per million of available chlorine.

D. Using a nozzle at each end hydrant, control the rate of flow into the new main and proportionally feed the hypochlorite solution into the main. After the chlorine has reached all points in the system, close the valve supplying water from the existing main and the end hydrants. Maintain the heavily chlorinated water in the main for 24 hours during which time all main line valves should be operated. After 24 hours, the minimum chlorine residual must be at least 10 parts per million.

E. Flush heavily chlorinated water from the line and refill the line for service. Take and submit two bacteriological samples of the water to the State of Connecticut Department of Public Health, State-approved testing laboratory, or Facility as ordered by the CTDOT PM. If the results are unsatisfactory, the disinfection procedure will be repeated until satisfactory results are obtained.

3.14 STABILIZATION

A. All disturbed areas shall be stabilized as noted on the Trade Contract Drawings per appropriate Section of the Specifications.

3.15 CLEAN UP

A. All extraneous material or construction debris shall be removed from the site before completion of construction as directed by the CTDOT PM. Disposal of this material is the responsibility of the Trade Contractor.

END OF SECTION 33 22 00

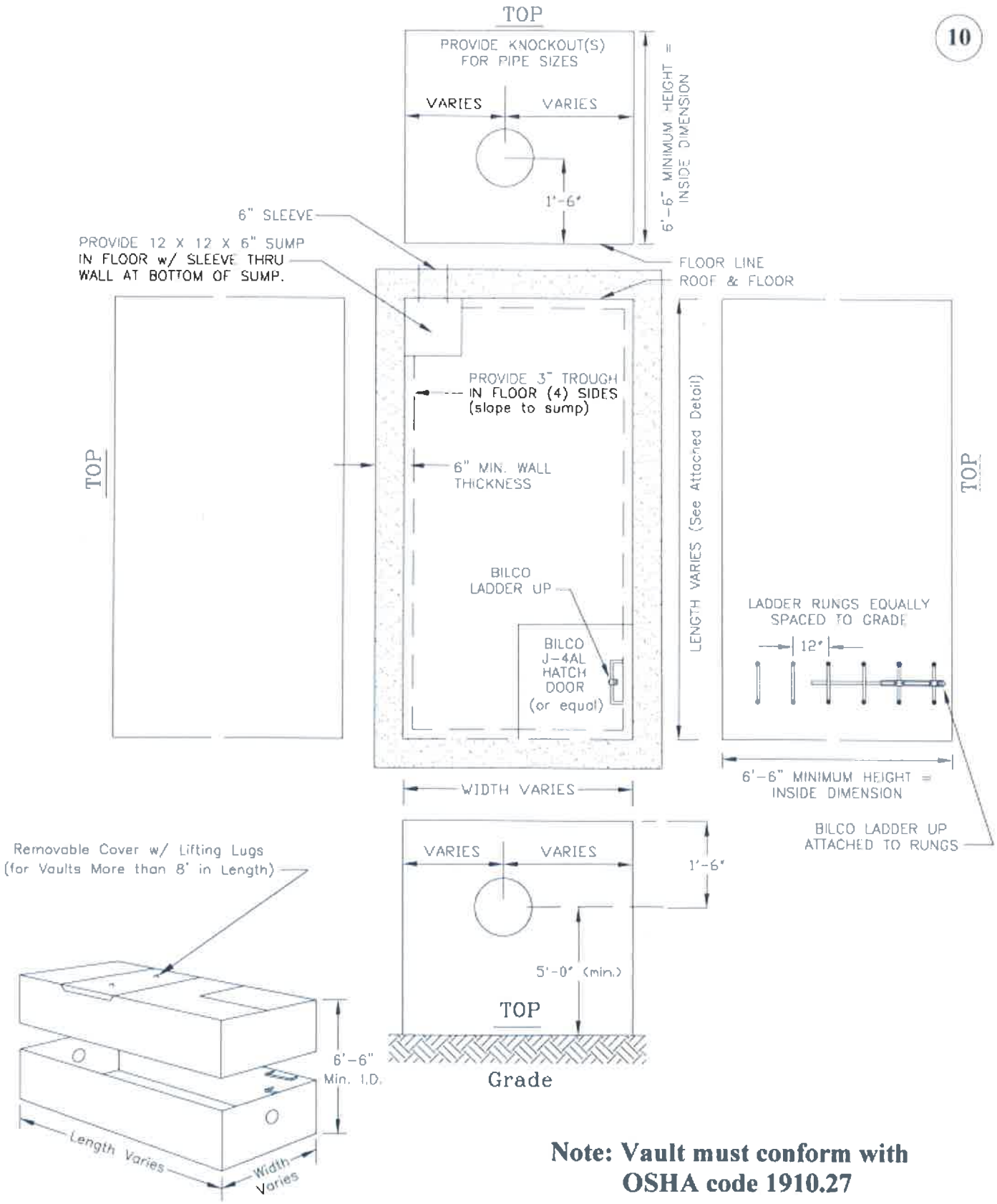

Note: Vault must conform with OSHA code 1910.27

Regional Water Authority

90 Sargent Drive, New Haven, Connecticut

M:\AutoCAD\Construction details\New Water Service\vault_07.dwg

Meter Manhole Detail

December 2007

SECTION 33 41 10 - PUMPING STATION

PART 1 - GENERAL

1.1 INTRODUCTION

A. The Contractor shall furnish, install and place into satisfactory operation, a duplex sewage pump station complete with two (2) submersible sewage pumps and a pump control panel, remote alarms, piping, valves and associated appurtenances as shown on the drawings and specified herein. The Contractor shall furnish all labor, material and pump station manufacturer's services as required for a complete, properly operating pump station.

The Contractor shall fully coordinate all related field operations with the pump station manufacturer. Coordination shall include, but not be limited to: verifying dimensions of equipment furnished; interfacing with and connection of all exterior piping and utilities in the field connecting external power to the pump station and wet well if required; and all other miscellaneous operations as required.

The pump station and all equipment contained within it shall be furnished as a complete package system, by one pump station manufacturer. All equipment and fasteners shall be constructed of corrosion-proof materials as specified.

Shoring as indicated on the Drawings shall be installed as required by soil conditions or as directed by the Engineer in accordance with Section 31 41 00 – Shoring.

1.2 DESCRIPTION

A. Work included:

1. Dewatering site
2. Installation and removal of shoring as required
3. Excavation of earth
4. Placement of compacted granular fill under pump station
5. Placement of precast concrete pump station, including wet well and valve chamber
6. Installation of pumping equipment with guiderails, ladders, hatches and all related appurtenances
7. Connection to force main
8. Connection of electrical service, pump control panel and all associated appurtenances
9. Backfilling
10. Final grading
11. Startup and testing

B. Related work described elsewhere:

1. Section 01 25 00 – Substitution Procedures
2. Section 01 33 00 – Submittal Procedures
3. Section 01 33 00.13 – Document Control
4. Section 01 45 00 – Quality Control
5. Section 01 55 26 – Traffic Control
6. Section 01 57 13 – Temporary Erosion and Sediment Control
7. Section 01 57 26 – Site Watering for Dust Control
8. Section 01 51 39 – Temporary Support of Utilities
9. Section 01 73 29 – Cutting and Patching
10. Section 03 30 53.01 – Class "C" Concrete
11. Section 31 11 00 – Clearing and Grubbing
12. Section 31 23 16.13 – Trenching
13. Section 31 23 19 – Dewatering
14. Section 31 35 19.17 – Geotextile (Separation-High Survivability)
15. Section 31 41 00 – Shoring
16. Section 32 11 23 – Aggregate Base Courses
17. Section 32 12 16 – Asphalt Paving
18. Section 32 33 43.23 – Site Bollards
19. Section 32 91 19.13 – Topsoil Placement and Grading
20. Section 32 92 19 – Seeding

1.3 QUALITY ASSURANCE (See Section 01 45 00 – Quality Control)

A. The pump station shall be the standard product in regular production by a single pump station manufacturer, who shall have 5 years minimum, successful experience in the production of equipment specified herein. The pump station manufacturer shall be reputable and thoroughly qualified in the manufacture of the equipment specified.

B. The pumping station and equipment specified shall be standard equipment and totally suited for the application as detailed herein. The equipment to be furnished shall be satisfactorily and safely designed, in accordance with the design parameters as detailed in these contract documents. It shall be constructed for continuous, automatic operation for extended periods of time.

C. The station shall be designed, fabricated, constructed and installed in accordance with the best practices and methods applicable. The pump station furnished shall be the product of the highest quality materials and equipment, as well as, the pump station manufacturer's proven methods.

D. Provide one person, who will be present at all times during the execution of this work, who is thoroughly familiar with the type of materials used and equipment installed, and who will direct all work under this Section.

E. Use all means necessary to protect materials and appurtenances before, during, and after installation, including proper storage. Follow the manufacturer's recommended procedures for unloading, storage and installation where applicable.

F. In the event of damage or theft, make all repairs and replacements necessary, subject to approval by the Engineer, at no additional cost to the Owner.

G. Contractor shall provide the necessary equipment or secure a testing firm to conduct pressure, leakage, disinfection, infiltration, deflection, and lamping tests on the installed utilities, and, if required, concrete testing and loaded truck test.

H. Comply with all applicable standards referenced below and all conditions required by State or local permits.

1.4 SUBMITTALS (See Section 01 33 00 Submittal Procedures and Section 01 33 00.13 Document Control)

A. Within 30 days after the Award of Contract, and before materials and/or equipment are delivered to the site, submit to the Engineer technical information on equipment to be furnished and certification of compliance with applicable standard tests for materials to be used, if materials and/or appurtenances are other than brand names specified.

B. Where the phrases "or equal" or "of equal quality" appear, substitution may be made only by approval of the Engineer. Such substitution will be considered only when submitted with full and complete technical data and information for evaluation prior to installation. (See Section 01 25 00 Substitution Procedures)

C. An independent testing company, approved by the Engineer, shall obtain samples and provide sieve analysis for the granular materials to be used.

D. An independent testing company, approved by the Engineer, shall provide compaction tests as required.

E. An independent testing company, approved by the Engineer, shall provide current concrete design mix with a 7 day and two 28 day compressive strength tests for any concrete requiring reinforcing steel.

F. Provide minimum of 48-hour notice to Engineer, and a written authorization notice to proceed from the affected utility, before interrupting any utility.

G. Submit written results of all tests on the installed utilities and appurtenances to the Engineer.

H. Furnish four (4) complete sets of Operations & Maintenance Manuals which are job specific at time of start up.

1. The manuals shall be prepared with clear instructions which will enable personnel to operate and maintain the complete pump station system.
2. The manuals shall be bound in a three ring vinyl binder with a heavy gauge clear vinyl overlay on the front cover and spine, which is insertable from the top. A title sheet tabulating information including: name and location of project, manufacturers and consulting Designer's name and address, shall be placed in these pockets. The manuals shall contain an index which lists and locates all enclosed literature and drawings.
3. The manuals shall be comprehensive and contain as a minimum the following:
   a. Instructions relevant to all modes of equipment operation.
   b. Service and troubleshooting instructions as may be available from select manufacturers of equipment supplied.
   c. Procedures for the adjustment of equipment at initial start-up, during routine preventative maintenance, and following replacement or repair.
   d. Instructions for testing and calibration of electronic components required to determine proper performance.
   e. As-Built mechanical drawings and dimensional information showing the actual layout and location of all major equipment components within the structures.

I. Furnish six (6) sets of submittals for the pre-fabricated pumping station to the Designer for approval, prior to the production of the pump station. Submittals shall contain complete, detailed shop drawings and literature on all equipment, including descriptions, diagrams, parts and listing of construction materials as required indicating full compliance with the specifications. Partial submittals of shop drawings or equipment data will not be accepted, reviewed or approved.

Shop drawings and equipment data shall be complete with respect to dimensions, materials of construction, design/performance criteria, wiring diagrams, component parts, etc., to enable the Designer to conduct a complete review of all equipment specified. Submittals shall be comprehensive and shall fully address and contain:

1. Structural design calculations, flotation calculations as specified.
2. Full detailed shop drawings, including all elevations and plan views depicting size and locations of all major pieces of equipment.
3. Schematic electrical wiring diagrams, piping layouts, and descriptive literature on each item of equipment to be furnished as specified.
4. Certified performance and test data as specified in the specification.
5. Pump catalog Data complete with pump dimensional drawings, electrical data and performance curves.

6. Pump Breakaway guide fitting data complete with dimensional drawings, material of construction and fictional loss information.

7. Job specific installation drawings.

8. Control panel data complete with panel layout drawing, deadfront door layouts control wiring schematics, power wiring schematics and any other requirements for equipment specified within.

9. Complete information on all related pump station accessories.

Each submittal shall be complete with a cover page and index, outlining the description of all items being supplied. The complete submittal shall be bound in a three ring vinyl binder.

J. At the time of submission, the Contractor shall, in writing, call the Designer's attention to any deviations from the requirements of these specifications that are contained in the submittal documents. Deviations or omissions in the submittal drawings and related data shall not relieve the Contractor from his responsibility for providing the specified requirements unless the Designer has given written approval for the deviations or omissions identified.

K. Verify that all materials and equipment will be available in time for orderly installation during the course of the work. Provide in writing, an outline of a complete timetable of all work necessary to complete the pump station and make it operational.

1.5 JOB CONDITIONS

A. Pipe lengths indicated on the drawings are for information only. Furnish lengths as required.

B. Site Information: Data on indicated subsurface conditions are not intended as representations or warranties of accuracy or continuity between soil borings. It is expressly understood that the Owner shall not be responsible for interpretations or conclusions drawn therefrom by the Contractor. Data is made available for the convenience of the Contractor. Additional test borings and other exploratory work may be made by the Contractor at no cost to the Owner.

C. Existing Utilities: Locate existing underground utilities in the areas of work. If utilities are to remain in place, provide adequate means of protection during earthwork operations.

1. The Contractor shall contact Call Before You Dig (1-800-922-4455) or Dial 811 prior to excavation.

2. The Contract Documents show existing underground utilities based on above ground observations or record drawings. The Contractor shall anticipate that the actual location or existence of any utility may vary from that shown. Should uncharted, or incorrectly charted, piping or other utilities be encountered during excavation, consult the utility owner immediately for directions. Cooperate with the Owner and utility companies in keeping respective services and facilities in operation. Repair

damaged utilities to the satisfaction of the utility owner.

3. Do not interrupt existing utilities serving facilities occupied and used by the Owner or others, except when permitted in writing by the affected utility and then only after acceptable temporary utility services have been provided.

4. Demolish and completely remove from the site, existing underground utilities indicated to be removed. Coordinate with utility companies for shut-off of services if lines are active.

5. If pipe adjustment is necessary due to the locations of other utilities, secure approval from the Engineer.

E. Do not change pipe sizes without securing written approval of the Engineer.

F. Use of Explosives: Do not bring explosives onto the site or use in work without prior written permission from authorities having jurisdiction. Contractor is solely responsible for handling, storage, and use of explosive materials when their use is permitted.

G. Protection of Persons and Property: Barricade open excavations occurring as part of this work and post with warning lights as required in Section 01 55 26 – Traffic Control as modified herein.

1. Operate warning lights as recommended by authorities having jurisdiction.

2. Protect structures, utilities, sidewalks, pavements, and other facilities from damage caused by settlement, lateral movement, undermining, washout and other hazards created by earthwork operations.

H. Refer to Section 01 57 26 – Site Watering For Dust Control for dust control procedures during construction.

I. Refer to Section 31 11 00 – Clearing and Grubbing for procedures regarding the protection of existing trees and vegetation.

J. Contractor shall comply with the latest rules of the Connecticut Occupational Safety and Health Administration (CONN-OSHA).

1.6 TESTING LABORATORY SERVICES (See Section 01 45 00 Quality Control)

The Contractor shall supply sufficient sieve analysis results on the backfill material to insure that the materials are in accordance with the specifications. A total of 10 to 15 passing compaction tests shall be conducted at various elevations during backfill around the structures. The Contractor shall conduct sufficient testing of the concrete to insure that the materials and strength are in accordance with the specifications, and as a minimum, shall provide a 7 day and two 28 day concrete compressive strength tests for each 10 cubic yards of concrete or fraction thereof. All testing will be run at the Contractor's expense. Test results shall be submitted in writing to the Engineer in accordance with Section 01 45 00.

1.7 PUMP STATION – DESIGN

A. The pump station structures shall be constructed to the lengths, widths and heights as shown on the contract drawings. The station shall be designed to adequately and safely support all live and dead loads to which the structure will be subjected, and to withstand all conditions which may be encountered. Structural drawings and calculations shall be prepared, signed and sealed by a Professional Engineer registered in the state of Connecticut.

B. Design calculations shall verify that the structures have been designed to withstand the burial depth, and the dead and live loads anticipated for the station. The station structures shall have adequate wall, floor and roof thickness and steel reinforcement sufficient for the depth of burial shown on the drawings. The base, flange, and bottom barrel section of the pump station shall be monolithically precast.

C. Roof slab/ceiling slab designs shall account for the loads imposed on the slab by the weight of the pumps or other equipment that will be lifted from their positions for maintenance purposes by lifting hooks or other hoisting equipment installed in the slab. The wet well and valve chamber shall be designed for HS-20 loading

PART 2 - PRODUCTS

2.1 SUITABLE BACKFILL

Backfill for around the pump station shall consists of on-site or borrow material of soil or soil-rock mixture free from organic or frozen material and other deleterious substances. The material shall contain no rocks or lumps larger than 3 inches in diameter. Material must be approved by the Engineer prior to use.

2.2 CRUSHED STONE SUBBASE

Subbase material shall be No. 6 crushed or broken stone conforming to the requirements of Section 31 23 23 – Fill.

2.3 PRECAST CONCRETE PUMP STATION

A. Concrete used in the manufacture of components shall meet the following criteria:

1. Cement shall be high early strength Portland cement, Type T11, conforming to ASTM C-150. Fine aggregate shall consist of washed natural sand conforming to ASTM Specification C-33.
2. Coarse aggregate shall consist of 3/4" well-graded crushed stone conforming to ASTM Specification C-33.
3. Air entrainment shall be 4.5% plus or minus 1%.
4. A superplasticizer shall be used and concrete shall be placed at a slump of 6" plus or minus 1".

5. The concrete used for the structural components shall attain a minimum 28 day compressive strength of 5,000 PSI.

6. Concrete fill used in the floors (to form fillets and sloped floors) shall comply fully with this subsection except that the concrete shall attain a minimum 28 day compressive strength of 2,000 PSI.

B. Reinforcing steel used in the manufacture of components shall meet the following requirements:

1. Steel shall be new billet steel, deformed steel bars conforming to ASTM A-615 (latest revision), Grade 60. Welded steel wire fabric reinforcing shall conform to ASTM A-185 (latest revision).

2. Minimum cover of reinforcement shall be 3 inches, and shall conform to relevant American Concrete Institute (ACI) cover requirements.

C. Each precast module shall be provided with formed male and female joints to insure accurate joint surfaces and tolerance for a watertight seal. All joints between adjoining precast modules shall be primed at the factory and sealed by the pump station manufacturer's personnel when modules are set in the field utilizing a vulcanized butyl rubber compound sealant conforming to AASHTO M-198 (latest revision). All surfaces of the precast structure shall be smooth, even and free from roughness, irregularities and other defects, and shall be suitable for receiving the interior and exterior finishes specified elsewhere herein.

D. Whenever possible, the station's walls shall be monolithically cast with the roof and wall slabs. The valve chamber shall have a sump which shall not be less than 4" inches deep and sized with a minimum area of 12 inches x 12 inches.

E. All wall penetrations shall be formed utilizing cast-in-place sleeves or cast in couplings as shown in the drawings. Wall sleeves shall be appropriately sized for use with a mechanical type water seal. Mechanical seals shall be "Linkseal" as manufactured by Thunderline, or equivalent.

F. The pump station and all related structures, including wet well and valve chamber, shall be fabricated and cast in full accordance with approved structural designs and shop drawings.

G. The pump station shall include a vent as detailed on the plans.

H. The entire exterior of the structure shall be coated with an asphalt sealant.

2.4 ACCESS COVERS

The access covers shall be single, leaf construction and HS-20 load rated. The covers shall be constructed of 1/4" thick, one piece, mill finish, extruded diamond plate aluminum. A channel frame shall be provided with a 1" drainage coupling. The inside of the frame shall have a door support ledge on two sides both frame and ledge must be supported by the concrete. The door shall open 90 degrees and automatically lock with a stainless steel hold open arm with

aluminum release handle. For ease of operation each door shall incorporate enclosed stainless steel compression spring assist, door shall shut flush with the frame. The lifting handle, hinges and all fastening hardware shall be stainless steel, flush with the door surface, and the unit shall lock with a stainless steel slam lock with removable keys. The cover shall be guaranteed against defects in material and/or workmanship for a period of ten (10) years.

2.5 POLYVINYL CHLORIDE PRESSURE PIPE (PVC) AND FITTINGS

PVC pipe shall be Pressure Class 200, SDR 21 pipe manufactured from virgin PVC compound with a cell classification of 12454-B as specified in ASTM Specification D1748. It shall conform to ASTM D2241 for physical dimensions and tolerances and shall be Iron Pipe Size (IPS). Gaskets shall conform to ASTM F477. Joint design shall be tested to the requirements of ASTM D3139. All inlet pipes shall be installed to the wet well using rubber boots. All pipe penetrations through the concrete wet well and valve chamber shall be sealed by Linkseal type fittings or approved equal.

Fittings shall be PVC, Class 200, IPS with bells conforming to ASTM F477.

A dresser type coupling shall be installed between the wet well and the valve chamber.

2.6 GATE VALVES

Gate valves shall conform to the requirements of Federal Specifications WW-V-54 for Class A, Type I, and shall be bronze, single wedge, non-rising stem, screwed bonnet, 125-pound S.P., 300-pound W.O.G., with stuffing box repackable under pressure and all parts renewable.

2.7 CHECK VALVES

Check valves shall be bronze, bronze disc, swing check valves conforming to Federal Specification WW-V-51E, Type 4 Class A-125 pound.

2.8 ALUMINUM LADDER AND LADDER EXTENSION

The wet well and valve chamber shall each be supplied with an aluminum (6061-T6) wall-mount access ladder. The ladders shall be fastened to the concrete with 316 stainless expansion bolts and shall meet OSHA standard 1910.27 requirements.

The ladder rails & supports shall be all welded aluminum construction. Rails and wall supports shall be solid 3/8” x 2 ½” flat stock, and rungs shall have a 1-1/4” diameter with serrated surface extruded into the rung for slip resistance. The minimum design live load shall be a single concentrated load of 200 lbs.

Rung spacing shall be uniform and not exceed 12”, the minimum clear length of rungs shall be 15-1/4”, and the distance from the center line of the rung to the nearest permanent object shall not be less than 7”.

The ladder extension assembly shall be constructed of aluminum and stainless steel. The aluminum housing shall mount to the ladder by means of grade 316 stainless steel channel clamps

secured to the ladder rungs with grade 316 stainless steel "U" bolts. The aluminum telescoping post shall extend 42” above the top of the housing and lock into position with a grade 316 stainless steel pin.

2.9 SUBMERSIBLE PUMPS

A. Furnish and install two (2) submersible explosion proof, 3-inch solids handling, non-clog pumps. Each pump shall have the following characteristics:

Design Capacity	85 GPM
Design Total Dyanamic Head	14 Feet
Maximum Speed	1750 RPM
Maximum Shutoff Head	66 Feet
Maximum Horsepower	2.0 H.P.

B. All pump motors shall be 460 volt three phase, 60 hertz operation. The pump must be non-overloading through the entire performance curve.

C. The pumps shall be manufactured by a company regularly engaged in the manufacture and assembly of similar units for the last five years.

D. The pump shall be capable of handling raw unscreened domestic sewage consisting of water and fibrous materials and 3" (min.) spherical solids. The pumps shall be capable of handling liquids with temperatures to 104 degrees F continuous, 160 degrees intermittent and capable of running dry for extended periods.

E. The volute, seal plates, impeller and motor housing shall be constructed of high quality ASTM-A48 Class 30 or better cast iron. The pumps shall be painted with an acrylic primer coating of 1.0 Mils minimum thickness and a water based air dry enamel top coat of 1.5 mil minimum thickness. All exposed hardware shall be 300 series stainless steel. The pump construction shall contain no points of critical clearance, nor require periodic adjustment or replacement to maintain operating efficiency. The discharge connection shall be standard 4" NPT flanged connection in the vertical position. All gaskets shall be of the compression square ring type eliminating critical slip fits and the possibility of damage during service associated with sliding o-ring sealing arrangements.

F. The impeller shall be a non-clog design, meeting ISO G6.03 standards. The impeller shall have pump out vanes on the back side and be dynamically balanced to ISO G6.3 Specifications.

G. The double mechanical shaft seal shall be of the sing spring design which will operate in an oil filled sealed cavity. Pump out vanes in the back of the impeller shroud shall develop a radially increasing pressure differential from the impeller hub outward. The pressure differential shall be transmitted by means of a Buna "N" elastomer diaphragm to the oil in sealed cavity, thus producing a high pressure inside the seal cavity then immediately adjacent to the seal face in the pump case forcing the oil in the seal cavity to be the seal face lubricant. The materials of construction shall be tungsten carbide for the rotating face and ceramic for the stationary face, lapped, and polished to a tolerance of

one light band, 300 series stainless steel hardware, and all elastomer parts to be of Buna "N". The seal shall be commercially available and not a proprietary design of the manufacturer. A moisture sensor detection system consisting of two probes utilized as a positive/negative pole shall be integrated within the oil filled seal chamber.

H. Each pump to be shipped to this project shall be fully tested at the factory before shipment. Tests shall consist of laboratory testing at shutoff and five points over the operating range of the pump. Once of the points will be the specified primary design point. Certified test data will include head, capacity, motor output HP, RPM, pump efficiency and be charted and graphed. All tests will be under the direction of a registered professional engineer and be conducted in accordance with the applicable Hydraulic Institute Standards and Procedures and be submitted to the Designer for approval, before shipment from the factory.

I. The pump shall be designed to be non-overloading throughout the entire pump curve. The pump and motor shall be listed with Underwriters Laboratories as Class 1, Groups C & D, Division 1, explosion proof, for installation in water or sewage. All electrical parts shall be housed in an air filled, cast iron, water-tight enclosure. The enclosure shall be sealed by the use of o-rings and shall have rabbit joints with a large overlap. The motor shaft extension and all external hardware shall be stainless steel. The motor windings shall be of Class F insulation minimum with a minimum service factor of 1.15.

J. Two moisture sensing probes shall be used to detect any influx of liquid past the outer seal and provide ample warning to the first seal failure.

K. Thermal sensors shall be used on these units in order to monitor the stator temperatures. The stator shall be equipped with a thermal switch embedded in the end coil of the stator winding. This shall be used in conjunction with external motor over-temperature protection and wired to the control panel.

L. The lower bearing shall be of the single row ball type to accept radial and thrust loads, and the upper bearing of the ball design for radial loads. Bearings shall operate in an oil bath atmosphere for superior life. Permanently lubricated bearings are not acceptable. The stator shall be equipped with a overload switch on the motor windings and do not require any external protection.

M. The pump shall be equipped with 10/4 type SOW-A power cable and 18/5 SO sensor cable to the length required. All incoming lead wires shall be spliced in the motor terminal housing. After splicing the terminal housing shall be filled with epoxy to seal the outer cable jacket and the individual strands to prevent water from entering the motor housing. A secondary rubber pressure grommet shall be provided as a additional sealing point and strain relief at the point of cable entry.

N. The pumps shall be equipped with stainless steel lifting chain capable of handling the pump weight. This chain shall be attached to the pump for removal from the wet well. The length shall be 3 feet longer than the station depth. Stainless steel cable shall not be acceptable.

O. Three float switches shall be provided, one for “pump off”, one for “pump on”, and one for “lag pump on/high water alarm”. Construction shall be polypropylene encapsulated air filled mercury float switches complete with 25 feet of cable with attached weight. These floats shall be attached to a stainless steel cable holder.

P. Provide one Nema 7 Explosion Proof Junction Box, to be located in the wet well for connection of the power cords. No splices shall be made outside of this Junction Box. Construction shall be and aluminum box with a screw type cover with o-ring seal.

Q. Provide one Nema 4X watertight junction box for "Intrinsic" level control and pump control cables. The box and all connectors shall be watertight and capable of withstanding an external liquid pressure of 10 PSI. The junction box shall be constructed of a flame retardant, ultra-violet resistant, foam Noryl with a minimum wall thickness of one-quarter inch. The cover shall be hinged, complete with four stainless steel locking screws, which are not removable from the cover. The exterior of the cover shall be stamped with "INTRINSIC SAFETY "WIRING". All cable connectors shall be sized according to the requirements of the pump and float manufacturer’s specifications.

R. Break Away Fittings shall be provided for each pump. The stationary portion of the BAF consists of a specially designed cast iron base elbow which is bolted to the floor of the wet well. The pump bolts to the bronze movable portion which is free to ride up and down the guide rails. An o-ring is pressed into a dovetailed groove on the tapered face of the movable portion. The tapered faces of the movable portion and base elbow allow for a positive mating of the o-ring to base. This elastomer to cast iron contact assures a complete and positive seal, allowing the pump to operate without hydraulic leakage, over a wide range of discharge pressures. The guide rails attached to the base elbow at one end and to a stainless steel guide cap which is attached to the underside of the wet well cover at the other end. Both the guide cap assembly and the base elbows have cast iron plugs with o-rings mounted in them which aid in locating the guide rails and reduce noise and vibration. The guide rails serve only to guide the pump removal, they carry none of the pump weight. Guide rails shall be schedule 40 stainless steel type 304 pipe. Intermediate stainless steel guide brackets shall be installed every 10 feet.

2.10 PUMP RAIL REMOVAL SYSTEM

The pump station shall be supplied with a stainless steel guide rail pump removal system, to facilitate emergency and routine maintenance in removing and re-installing the submersible pumps from the top of the station. The guide rail system will include lower guide brackets incorporated in the pump base elbow, 316-stainless upper guide brackets, 316-stainless intermediate guide brackets as may be required per the pump manufacture, and 304 stainless steel Schedule 40 guide rails of size and quantity as dictated by the select pump manufacturer and model.

Guide rail components shall be assembled and installed plumb to the pump station structure, and shall allow for pump removal and reinstallation without interfering with the access hatch or frame. All assembly hardware shall be 316-stainless steel.

2.11 DUPLEX CONTROL PANEL

Provide a Duplex Nema 4X Stainless Steel Control Panel with mounting legs rated for 2 HP 460 volt three phase operations. All selector switches, pilot lights and other panel mounted devices shall be mounted on the interior deadfront panel. The deadfront panel shall be constructed of anodized aluminum and shall have a continuous aluminum hinge. The control panel enclosure shall be constructed of stainless steel and shall have means for padlocking. The Control Panel shall be equipped with the following:

A. Two properly sized circuit breaker combination starters with NEMA class 10, ambient compensated overload protection and individual phase failure protection.

B. Manual off-Automatic selector switch, green running pilot light, red failure pilot light, and red seal failure pilot light for each pump.

C. The operation sequence of the duplex pump system shall be designed to alternate the lead pump between successive pump cycles.

D. Level inputs for stop, lead pump start, lag pump start and high water alarm. The power supplied to the level sensors shall be a maximum of 24 VAC with a current of less than 30 ma for intrinsic safety and shall be optically isolated.

E. Pilot light indicators for each level input.

F. A field adjustable failure time delay for each pump. Controls to start the lag pump at the lead pump start level if the lead pump fails or if the lead pump selector switch is placed in the off position. If a pump fails, the remaining functional pump shall remain the lead pump on future cycles. The failed pump shall only be called to operate at the lag pump operating level. Normal pump alternation shall resume when failure condition is corrected and pump has been reset.

G. Soft stop feature to require the pumps to stop three (3) seconds apart during the condition that both pumps are running when signaled to stop to prevent water hammer.

H. Individual field adjustable time controls to delay starting each pump by the automatic mode after power failure or during initial startup.

I. When pumps are in the automatic mode, and controller receives a seal failure condition, the controller shall automatically alternate to the other pump and the failed pump shall be made the lag pump on future cycles until seal failure condition is corrected.

J. A red high water alarm pilot light and common exterior alarm light with red lexan lens. The exterior alarm light shall burn dimly during normal conditions to indicate power on and the lamp good, and shall flash brightly during high/low water level, pump failure, or seal failure. The red high water alarm and the common exterior alarm lights will be remotely mounted on the exterior building wall. Provide wiring and conduit per division 26 specifications to connect lights to control panel. Refer to the drawings for location.

K. Provide an exterior alarm horn mounted adjacent to the exterior alarm lights. The horn shall sound continuously upon panel alarm. Provide wiring and conduit per division 26 specifications to connect horn to control panel. Coordinate with owner for sound pattern as part of submittals.

L. Provide two form C common alarm output contacts in the control panel that shall be energized by control panel alarm conditions for remote monitoring by the building systems.

M. Pump run time hour meters on the panel, to be used for maintenance and flow monitoring purposes, shall be readable in one-tenth hour increments.

N. Pump failure, pump seal failure and high water alarm red pilot light shall flash when activated.

O. A Main interlocked circuit breaker shall be provided with through dead-front operator. Control Panel enclosure shall be provided with a cabinet heater and thermostat.

P. Lightening arrestor

Q. GFI receptacle 20 amp 115 volt

R. Level Meter\Controller - Provide an electronic solid state proportional Level Meter\Controller that will accept a four (4) to twenty (20) ma or a one (1) to five (5) VDC signal, condition the signal to provide a valid basis for control and then perform ON\OFF or OPEN\CLOSE discrete dry type set point contact conditions based on the input value of the analog input signal. The Level Meter\Controller shall have the following features:

1. Provide with a 3 1\2 digit LED readout meter in feet of water.
2. Provide 6 separate set-points each with discrete, isolated sealed SPDT relay output contacts.
3. Provide excitation voltage to drive a transducer \ transmitter and condition its output signal to provide a continuous display of level.
4. The set-points shall be field adjustable to operate on rising above or falling below the set-point.
5. An LED indicator shall be provided for each set-point to indicate when it is activated.
6. The actual setting of each set-point shall be able to be displayed on the digital readout at any time.
7. The setting of each set-point shall be adjustable throughout the complete signal range from the front of the Meter\Controller.
8. Provide a means of manually ramping the meter \ controller, up and down, throughout its complete signal range, to test the operation of the set-points.

9. The meter \ controller shall come complete with a four (4) to twenty (20) ma or a one (1) to five (5) VDC output signal for additional monitoring and control devices.

S. Submersible Pressure\Level Transducer - Provide a solid state direct submersible transducer with a stainless steel housing. The range of the transducer shall be as required for the desired application with excitation voltage of 15 - 45 VDC. The transducer shall incorporate a diffused silicon semiconductor sensor protected by an integral stainless steel diaphragm and fill fluid. The transducer shall be able to be mounted at the bottom of the pit with support bracket and be cable connected, providing a analog input signal to a meter \ controller. The analog signal shall be four (4) to twenty (20) ma or one (1) to five (5) VDC as required. The operating temperature shall be -40 degrees to ·176 degrees Fahrenheit and the accuracy shall be +\- 0.5% O.S. (including linearity, hysteresis and repeatability).

T. Provide and electronic solid state Motor Monitor powered by 120 volt AC, that will accept a zero (0) to five (5) amp input signal, condition the signal to perform ON\OFF or OPEN\CLOSE discrete dry type set-point contact conditions based on the input signal value. The Motor Monitor shall have the following features:

1. Provide an LCD readout meter providing field adjustable scales of 0-25.0, 0-50.0, 0-100.0, 0-250.0, 0-500.0 and 0-1000.0 to accurately indicate the motor full load current using the 05 amp input signal.
2. The monitor shall be capable of displaying motor total running time up to 99,999.9 hours and be provided with reset capability from the rear of the monitor plus come complete with automatic rechargeable battery backup with 5 year duration.
3. Provide two (2) separate field adjustable set-points, each with discrete, isolated sealed SPDT relay output contacts. The setting of each set-point shall be adjustable throughout the complete signal range from the front of the Monitor. Each set-point shall be provided with a field adjustable "ON" and "OFF" time delay, adjustable from 0 to 15 seconds. The actual setting of each set-point shall be able to be displayed on the LCD readout at anytime. An LED indicator shall be provided for each set-point and shall operate as follows:

    a. Set-point No. 1 - When set-point is timing, the indicator shall burn amber. After timing period and current is at or above set-point, indicator shall burn green.

    b. Set-point No. 2 - When set-point is timing, the indicator shall burn amber. After set timing period and current is at or above set-point, indicator shall burn red.

U. Automatic Alarm Dialer – Furnish one (1) automatic dialing alarm monitor. The monitor shall be a microprocessor based system that shall sense four alarm conditions at the site. In addition, power failure shall be sensed internally and shall not require using one of the fault channels. Upon detection of any of the fault conditions or power failure the unit shall commence dialing the first of eight (8) user selected phone numbers and deliver a message describing the alarm condition. This message shall be delivered in an electronic digitized voice, utilizing the user's own digitally recorded voice. Message programming shall be accomplished by speaking into the system and shall not be limited to internal synthesized speech vocabulary. Messages will include actual system location

and alarm conditions. The unit will continue to call the phone numbers is succession until acknowledged by calling the unit back or by depressing a touch tone key. Once acknowledged, the unit shall enter a programmable intercall delay to allow the alarm condition to be attended to before beginning notification again. Upon receipt of a call, the system shall report the station status to the caller. All communications shall utilize standard telephone lines; no leased or dedicated lines shall be required.
The alarm monitor unit shall possess the following physical and function characteristics:

1. Fiberglass NEMA 12 enclosure, with clear polycarbonate gasketed cover and external mounting holes and lockable stainless steel clasps.
2. Built-in maintenance free battery back-up, 4 hours.
3. Sealed mylar keyboard to preclude contamination.
4. Modular construction with plug-in circuit boards.
5. Tubular screw-clamp terminals for fault leads, not requiring lugs or connectors, for up to 12 AWG wire.
6. Optically isolated fault input protection.
7. Tone or loop-disconnect dialing capability.
8. Visual indications of the following conditions, even when the cover is closed:
    a. All fault channels Power on Call in progress
    b. Battery condition Intercall delay in progress
    c. Successful acknowledgment Message In progress
9. The unit shall utilize non-volatile ROM circuitry such that the unit's operating system, vocabulary selections, programmed phone numbers and all other functions and values stored in memory shall be retained without any power requirement. Additionally, each unit shall include the following standard features:
    a. Individually selectable intercall delay from the keyboard
    b. Individually selectable open and closed contacts for alarm sensing from the keyboard.
    c. Dual color, red/green indicators for each channel.

2.12 MANUFACTURER'S ASSISTANCE

Manufacturer shall provide assistance to the owner for installation, start-up, and advising operating personnel in the operation and maintenance of the equipment. Four (4) operating and maintenance manuals shall be provided after approval of the shop drawings. The manufacturer shall provide written certification that the equipment was installed and is operating correctly.

2.13 WARRANTY

The pump manufacturer shall warrant the pumps to the MNRR against defects in workmanship and material for a period of 5 years from date of shipment, or 10,000 hours of operation (Whichever occurs first). The warranty shall be pro-rated per the following:

TIME AFTER SHIPMENT

Months:	0-18	19 – 39	40 – 60
Hours:	0 – 3,000	3,001 – 6,500	6,501 – 10,000
Warranty:	100%	50%	25%

A one year guarantee shall be provided on all other equipment. The guarantee is to cover repair or replacement of a faulty condition caused by normal operation of the equipment. The guarantee begins upon acceptance of the complete pump station. Prior to expiration of the guarantee, the manufacturer, Contractor, Owner, and Engineer shall meet to test and inspect the operation of all features of the pumping station. The owner shall organize and cover the expense of this final test. If guarantee expires prior to this final test, then the owner assumes complete responsibility of the pumping station.

PART 3 - EXECUTION

3.1 GENERAL

A. Prior to any work, a pre-construction meeting with the Owner, Engineer, and Contractor to discuss and review the Project will be held.

B. Prior to all work in this Section, become familiar with the site conditions, materials and equipment to be installed, machinery and equipment to be used to make the installation.

C. Because of the location of the pumping station, it may be necessary to dewater the excavation and provide shoring to support the walls.

D. Do not cover any work before it has been observed by the Engineer. Any such covered work will be uncovered at no additional cost to the Owner.

3.2 DEWATERING SITE

The pump station excavation shall be dewatered before excavation. The method of dewatering may be a well point system encircling the site connected by a manifold to a pump system, or a system of shallow well sumps and engine driven pumps. The method used shall be capable of lowering the water table at or near the base of the station. Alternate methods of dewatering will be considered. The discharge of dewatering operations shall be done in such a way as to prevent excessive transport of sediment into surrounding waterways.

3.3 EARTH EXCAVATION

Excavated earth shall be separated into topsoil and other clearly distinguishable soil types such that the best material may be used for backfill.

3.4 PRECAST CONCRETE PUMP STATION

A. Provide shoring as specified herein and excavate to the required depth to provide for the stone base. If groundwater is encountered, provide dewatering equipment to keep the water table below the base of the station. Place and compact the stone base to the thickness detailed on the plans.

B. Lower the base sections of the wet well and valve chamber into the excavation and carefully level. Lower each successive section into place. Provide water tight joints between sections in accordance with manufacturers' recommendations.

C. Backfill around the wet well and valve chamber evenly in 12 inch lifts compacting to 95% maximum density (Standard Proctor). Extend the compacted backfill 6 inches above the top elevation of entering or exiting pipes.

D. Excavate for the exterior piping. Assemble the piping, place concrete anchors, anodes, thrust blocks, and complete the backfill.

E. Install the slide rail system, pumps and duplex control panel as shown on the Contract Drawings. Install the interior pipe and appurtenances as noted and connect to the force main. Install the remote alarm apparatus. Clean the station and surrounding area of all debris.

F. Grade the topsoil, seed, and mulch all disturbed areas and install plantings as indicated on the Contract Drawings.

The Contractor shall install the pump station per the manufacturer's instructions. The pump station manufacturer shall have a factory representative present during field installation. It shall be the Contractor's responsibility to obtain the recommended installation procedures directly from the manufacturer and comply with same.

The pump station manufacturer shall provide a manufacturer's representative to test the complete system at start up. All pumps shall be field tested after installation to demonstrate satisfactory operation without excessive noise, vibration, cavitation or overheating. Any pump which fails to meet any of the contract specifications will be modified, repaired or replaced by the Contractor at no additional cost to the State. A report shall be made to the Designer before final acceptance.

The cost for any damage which is the result of the contractor's failure to comply with the manufacturer's recommended installation procedures shall be borne solely by the Contractor.

3.5 LEAKAGE TEST OF WET WELL AND VALVE CHAMBER

Prior to backfilling, conduct a leakage test on the precast concrete wet well and valve chamber by filling the structures with water. The allowable leakage after stabilization shall be 0.5% of the total volume measured over a 24 hour period. Review test procedures with the Engineer prior to testing. Make any necessary repairs and retest if satisfactory results are not obtained. The Engineer will issue a written certification upon satisfactory completion of the test. The Contractor shall conduct a trial test prior to contacting the Engineer.

3.6 STARTUP AND TESTING

A. After installation of all pumping equipment, appurtenances and electrical controls, fill the wet well to 4 feet below the top with clean water.

B. Operationally test pumps, alarms and all appurtenances. For each pump, record the time for the level in the wet well, to drop 6 inches. Record all data obtained during the test.

3.7 STABILIZATION

A. All disturbed areas shall be stabilized as noted on the Contract Documents per appropriate Section of the Specifications.

3.8 SPARE PARTS

A. The manufacturer shall provide the following spare parts:

1. One (1) Mechanical Seal Kit
2. One (1) Complete Set of Gaskets and 0-rings
3. One (1) Set of Wear Rings
4. One (1) Level Meter Controller
5. One (1) Control Board
6. One (1) Submersible Level/Pressure Transducer

3.9 CLEAN UP

All extraneous material or construction debris shall be removed from the site before completion of construction as directed by the Engineer. Disposal of this material is the responsibility of the Contractor.

END OF SECTION 33 41 10

SECTION 33 41 13 – PUBLIC STORM UTILITY DRAINAGE PIPING

PART 1 GENERAL

1.1 SECTION INCLUDES

A. Furnishing and installation of new pipe culverts of the type, size and length called for on the plans or as ordered by the Engineer and in conformity with these specifications.

B. Air pressure testing of the gravity pipe.

1.2 SUBMITTALS

A. See Section 01 33 00 - Submittal Procedures and Section 01 33 00.13 – Document Control for submittal requirements for this work.

1.3 RELATED REQUIREMENTS

A. Section 03 30 00 Cast-in-Place Concrete, for concrete classifications and related requirements.

B. Section 04 05 11 Masonry Mortaring and Grouting, for mortar and grout requirements.

C. Section 31Section31 23 16.13 Trenching, for excavation and backfill.

D. Section 31 23 23 Fill, for granular fill and No 6 Crushed Stone.

E. Section 31 35 19.17 Geotextile (Separation – High Survivability), for Geotextile requirements.

F. Section 33 49 00 Storm Drainage Structures, for drainage structure related requirements Piping.

G. Section 33 49 13, for Storm Drainage Manholes, Frames, and Covers.

PART 2 PRODUCTS

2.1 MATERIALS

The materials for this work shall conform to the following:

A. Polyvinyl Chloride Pipe (PVC) and fittings shall conform to one of the following:

1. ASTM D3034: sizes up to 15 inches diameter

2. ASTM F679 – Pipe shall be solid wall pipe with a minimum stiffness of 46 lbf/in: sizes 18 to 36 inches diameter

3. ASTM F949 for corrugated PVC, smooth interior: sizes up to 36 inches diameter

4. AWWA C905: sizes up to 48 inches diameter

5. ASTM F1803 – Pipe shall be closed profile pipe with a minimum stiffness of 46 lbf/in: sizes 18 to 60 inches diameter. Closed profile pipe shall have a minimum stiffness of 46 psi for 18 inch to 27 inch diameter PVC pipe and minimum stiffness of 50 psi for 30 inch to 60 inch diameter PVC pipe.

The pipe shall have pipe diameter to wall thickness ratio (SDR) of a maximum of 35.

Testing: Pipe shall be tested when requested by the Engineer, and all sizes of pipe so designated shall be tested as follows:

Pipe shall be tested in accordance with ASTM D-2412 Standard Method of Test for External Loading Properties of Plastic Pipe by Parallel-Plate Loading.

Marking: Pipe shall be marked along the outside of the barrel in bold style type and shall indicate the manufacturer's name, pipe size, PVC compound used, i.e., PVC Type 1 Grade 1 and the ASTM material specification for the PVC compound used, i.e., ASTM D3034.

Workmanship: The pipe and fittings shall be homogeneous throughout and free from visible cracks, holes, foreign inclusions or other injurious defects. The pipe shall be as uniform as commercially practical in color, opacity, density and other physical properties.

B. Pipe Joints: Pipe joints shall be sealed by high quality factory installed nitrile O-ring gaskets and shall conform to the requirements of ASTM F477.

Joints shall be the bell and spigot type subject to the approval of the Engineer. Joints shall be sealed with a nitrile "0" ring gasket, approved by the Engineer, and shall be of a composition and texture which is resistant to hydrocarbons and ground water, and which will endure permanently under the conditions likely to be imposed by this use. The joints shall conform to ASTM D3212.

The tensile strength shall be at least 1300 psi. The elongation at rupture shall be such that 2 inch gauge marks shall stretch to not less than 10 inch. Hardness shall be between 40 and 50, as measured with a Shore Durometer. The compression set (constant deflection) shall not exceed 25 percent of the original deflection.

The tensile strength after accelerated aging shall be not less than 80 percent of the original strength. The joint, when assembled, must be able to withstand a hydraulic pressure internally of at least 25 psi.

C. Pipe Fittings: Wyes, Tees, Bends and adapters, and any other fittings required by the Engineer shall be provided. Plans for such fittings showing cross sectional views with dimensions shall be provided, and the Engineer prior to their use shall approve such plans and fittings. The materials used in the manufacture of fittings shall conform with the requirements for the Pipe

with which they shall be used and any variation of such requirements shall be subject to approval of the Engineer.

D. Waterstops: The manufacturer shall provide waterstops, acceptable to the Engineer, which shall be applied to the outside of plastic pipe when the pipe is to be enclosed in any structure where concrete or mortar is used which will prevent leakage along the outer wall of the barrel of the pipe.

   Waterstops within each trench greater than 100’ in length between structures are required and shall be Concrete Class “C” with no reinforcing.

E. Flexible Couplings: As required shall be manufactured by Fernco, Inc. Davison, Michigan or approved equal.

F. Bedding material shall conform to the requirements of Section 31 23 23 Fill, No. 6 Crushed Stone.

G. Granular fill shall conform to the requirements of Section 31 23 23 Fill.

PART 3 EXECUTION

3.1 EXAMINATION

A. Verify that construction area for drainage piping indicated on the plans is ready for the Work as indicated.

3.2 PREPARATION

A. Layout the location indicated on the plans for drainage piping prior to construction.

3.3 CONSTRUCTION METHODS

A. Unless otherwise directed by the Engineer, all new or re-laid pipe culverts, including culverts composed of structural plates, shall be installed in pipe bedding in accordance with the details as shown on the plans and in conformance with these specifications.

B. Pipe with an internal diameter of less than 48 inches and pipe-arch of an equivalent horizontal span shall be installed in a Type I installation, and pipe of 48 inches internal diameter or more, including pipe-arch of equivalent horizontal span shall be installed in a Type II installation.

C. Type I installation shall consist of installing the pipe, or pipe-arch, in bedding material with a thickness directly under the pipe of 4 inches and pre-shaped to a height of 10% of the total height of the pipe. After the pipe has been installed, the trench shall be backfilled with bedding material to a height of 25% of the total height of the pipe.

D. Type II installation shall consist of installing the pipe or pipe-arch in bedding material, with a thickness directly under the pipe of 4 inches and pre-shaped to a height of 10% of the total height of the pipe. After the pipe has been installed, the trench shall be backfilled with bedding material to a height of 12 inches above the top of the pipe.

E. Pipe Installation: Storm drain pipe shall be of the sizes, type, materials, etc., indicated by trade contract documents; all pipes shall be laid, supported, jointed, tested and backfilled as indicated or required for the particular job, location, or condition by drawings or other trade contract documents. All pipes when in place shall be precisely true to the line and grade indicated therefore by the Engineer, sound, well laid, jointed and bedded and free from defects. Any pipe discovered to be defective after having been laid shall be removed and replaced by a sound and satisfactory piece. All pipes shall be installed with a laser to assure close conformance to required grades.

All pipe shall be stored at the site until installation in a manner acceptable to the Engineer which will keep the pipe at ambient outdoor temperatures. Temporary shading shall be provided as required to meet this requirement. Simply covering the pipe or structures that allow temperature build up when exposed to direct sunlight will not be permitted.

Installation of PVC Pipe shall be in accordance with ASTM Specification D2321 and the following.

All pipes shall be installed per manufacturer’s installation instructions.

Geotextile: The Trade Contractor shall furnish and install Geotextile as called for in the trade contract drawings and in accordance with Section 31 35 19.17 Geotextile (Separation – High Survivability).

Bedding: Pipes shall be bedded in No. 6 Crushed Stone or as otherwise directed by the Engineer in accordance with the trade contract drawings and as described in of these specifications. Suitable bell holes shall be provided, so that after placement, only the barrel of the pipe receives bearing pressure from the supporting material.

All pipe and fittings shall be cleared of all debris, dirt, etc., before being installed and shall be kept clean until accepted in the completed work.

Pipe Straightness: No single piece of pipe shall be installed unless it is found to be generally straight. Such pipe shall have a maximum ordinate as measured from the concave side of the pipe not to exceed 1/16 inches per foot of length. If the deviation from straightness exceeds this requirement then the particular piece of pipe shall be rejected for use until it can comply with this provision.

Before any joint is made, the previously installed unit shall be checked to assure that a close joint with the adjoining unit has been maintained and that the inverts are matched and conform to the required grade. The pipe shall not be driven down to the required grade by striking it with a shovel handle, timber or other unyielding object.

All joint surfaces shall be cleaned. Immediately before jointing the pipe, the bell or groove shall be lubricated in accordance with the manufacturer's recommendation. Each pipe unit shall then be carefully pushed into place without damage to pipe or gasket. Suitable devices shall be used to force the pipe units together so that they will fit with a minimum open recess inside and outside and have tightly sealed joints. Care shall be taken not to use such force as to wedge apart and split the bell or groove ends.

Details of gasket installation and joint assembly shall follow the directions of the manufacturers of the joint material and of the pipe, all subject to review by the Engineer. The resulting joints shall be watertight and flexible.

Open ends of pipe and branches shall be closed with polyvinyl chloride stoppers secured in place in an acceptable manner.

After each pipe has been properly bedded, enough bedding material shall be placed between the pipe and the sides of the trench, and thoroughly compacted, to hold the pipe in correct alignment. Bell holes, provided for jointing, shall be filled with bedding material and compacted. Bedding above the spring line of the pipe (see Drawings for material) shall be placed and compacted to complete the pipe bedding.

The Trade Contractor shall take all necessary precautions to prevent flotation of the pipe in the trench. At all times pipe installation is not in progress, the open ends of the pipe shall be closed with temporary watertight plugs, or by other acceptable means.

If water is in the trench when work is to be resumed, the plug shall not be removed until suitable provisions have been made to prevent water, earth, or other substances from entering the pipe.

Pipelines shall not be used as conductors for trench drainage during construction.

F. Methods of backfilling shall be in conformance with the pertinent sections of Section 31 23 16.13 Trenching.

G. Where pipe is to be laid below the ground line, a trench shall be excavated to the required depth, the bottom of which shall be graded to the elevation of the bottom of the bedding material or to afford a uniform firm bearing for the pipe throughout its entire length, whichever the case may be. When rock is encountered, it shall be excavated to not less than 12 inches below the bottom of the pipe; and this depth shall be refilled with bedding material which shall be thoroughly tamped.

H. Where pipe is to be laid in a fill area, the embankment shall be placed and compacted to an elevation 12 inches above the top of the proposed pipe, whereupon the trench excavation shall be made and the pipe installed.

I. Where the nature of the foundation is poor, the culvert shall be relocated in firm material if possible. Where this cannot be done, the poor material shall be removed and replaced with a layer of granular fill of such depth as the Engineer may direct; or special construction of the character shown on the plans, project specifications or as ordered by the Engineer, may be employed.

J. Normally, the placement of pipe shall start at the downstream end and progress upstream. All pipes shall be carefully laid, true to the lines and grades given, hub ends upgrade and with the spigot ends fully entered into the adjacent hubs.

K. Portland cement mortar shall not be used for sealing pipe joints except by permission of the Engineer, and if permitted shall conform to the requirements of Section 04 05 11 Masonry Mortaring and Grouting.

L. Low Pressure Air Testing: Upon completion of installation, the Trade Contractor shall provide certified air tests, as directed by the Engineer, on all pipes installed under this Trade Contract.

Air testing will be conducted between structures. The pipe under test shall be plugged at both ends. An air hose shall be connected to a tapped plug to be used for air inlet to the line. The hose will be connected to portable air control equipment, which must include a shutoff valve, pressure regulating valve, pressure reduction valve and a monitoring pressure gauge with range from 0 to 5 psi.

Air shall be introduced from the air source through the control equipment to the pipeline.

a) Introduce low pressure air into the sealed pipeline until the air pressure reaches 4 psi gauge greater than the average groundwater pressure.

b) Allow a minimum of 2 minutes for the air pressure to stabilize to a minimum of 3.5 psi gauge greater than the groundwater pressure. Groundwater is assumed to be at ground surface unless the Trade Contractor can prove by otherwise by test pitting.

c) After the stabilization period, disconnect the air hose from the control panel to the air supply.

d) The pipeline will be acceptable if the pressure decrease is not greater than 0.5 psi gauge in the time stated in the following table for the length of pipe being tested:

Time (Min.) for Length of Pipe

Pipe Diameter	**0-99-foot**	**99-200-foot**	**200-300-foot**	**300-400-foot**
4-inch	2.0	2.0	2.0	2.0
6-inch	3.0	3.0	3.0	3.0
8-inch	4.0	4.0	4.0	5.0
10-inch	5.0	5.0	6.0	8.0
12-inch	5.5	5.5	8.5	11.5
15-inch	7.0	8.5	13.0	17.0
18-inch	8.5	12.0	19.0	25.0
21-inch	10.0	17.5	26.0	35.0
24-inch	11.5	23.0	34.0	45.5
27-inch and larger	14.5	29	43.0	58.0

Test Results:

a. If the installation fails the low pressure air test, determine the source of leakage.

b. Repair or replace all defective materials and/or workmanship and repeat low-pressure air test at no additional cost.

Allowable Pipe Deflection: Plastic pipe provided under this specification shall be so installed in the ground that a deflection of no more than 5 percent can be anticipated. Such deflection shall be computed by dividing the amount of deflection (nominal diameter less minimum diameter when measured) by the nominal diameter of the pipe. However, between any two adjacent drainage structures, the average deflection shall not exceed 6 percent and no deflection at any point in the pipe shall exceed 7 percent, computed in the manner described herein.

M. If so ordered by the Engineer, any pipe which is not in true alignment, or which shows any settlement or distortion after laying, shall be taken up and re-laid or corrected, to the satisfaction of the Engineer.

N. Place Concrete Waterstops full width of trench from bottom of trench to 12-inches above pipe at the midpoint of each run that is greater than 100-feet between structures or as directed by the Engineer. Forms are not required however the Trade Contractor may utilize them to restrain the width of the stop. A minimum width of 6-inches is required for each stop. Waterstops are not required for runs less than 100-feet between structures.

O. Where indicated on the plans or as directed by Engineer, existing pipe culverts shall be taken up and re-laid or extended and renewed in the same manner as specified herein for new pipe culverts.

P. Buried Utility Markings: The Trade Contractor shall install buried utility markings as called for in the trade contract drawings or as directed by the Engineer. Colored marking tape shall be labeled “Caution Buried Storm Drain Line Below”.

Q. Where shown on the plans or directed by the Engineer, the Trade Contractor shall connect the proposed drainage system with existing drainage structures or pipes. This work shall be performed in a workmanlike manner.

R. Where shown on the plans or directed by the Engineer, the Trade Contractor shall plug existing pipes with cement masonry.

END OF SECTION 33 41 13

SECTION 33 41 20 – FORCE MAIN

PART 1 - GENERAL

1.1 INTRODUCTION

A. The Work specified in this Section, includes furnishing and installing a sanitary force main at the locations and to the lines, grades, dimensions, and details shown on the drawings, complete as shown, specified and directed.

1.2 DESCRIPTION

A. Work included:

1. Trench excavation of earth.
2. Preparation of bed.
3. Installation of pipe and joint restraints.
4. Connection of force main to existing manhole.
5. Backfill of trench.
6. Testing of force main.

B. Related work described elsewhere:

1. Section 01 33 00 – Submittal Procedures
2. Section 01 33 00.13 – Document Control
3. Section 01 45 00 – Quality Control
4. Section 01 55 26 – Traffic Control
5. Section 01 57 13 – Temporary Erosion and Sediment Control
6. Section 01 57 26 – Site Watering for Dust Control
7. Section 01 73 29 – Cutting and Patching
8. Section 03 30 00 – Cast-in-Place Concrete
9. Section 31 11 00 – Clearing and Grubbing
9. Section 31 23 16.13 – Trenching
10. Section 31 23 19 – Dewatering
11. Section 31 35 19.17 – Geotextile (Separation-High Survivability)
12. Section 31 41 00 – Shoring
13. Section 32 11 23 – Aggregate Base Courses
14. Section 32 12 16 – Asphalt Paving
15. Section 32 91 19.13 – Topsoil Placement and Grading
16. Section 32 92 19 – Seeding

1.3 QUALITY ASSURANCE (See Section 01 45 00 – Quality Control)

A. Provide one person who shall be present at all times during execution of the work, who is thoroughly familiar with the types of materials used and execution of the work, and who shall direct all work under this section.

B. Use all means necessary to protect materials and appurtenances before, during, and after installation including proper storage. Follow the manufacturers' recommended procedures for unloading, storage and installation where applicable.

C. In the event of damage or theft, make all repairs and replacements necessary, subject to approval by the CTDOT PM, at no additional cost to the Owner.

D. Soils Testing: Compaction tests shall be Standard Proctor (ASTM D698) as required in Part 3 - Execution. Trade Contractor shall engage a soils testing and inspection service for sieve analysis and compaction tests during earthwork.

E. Trade Contractor shall provide the necessary equipment or secure a testing firm to conduct pressure and leakage testing on the installed force main.

F. Comply with all applicable standards referenced herein and all conditions required by State or local permits.

1.4 SUBMITTALS (See Sections 01 33 00 Submittal Procedures and Section 01 33 00.13 Document Control)

A. Within 30 days after the Award of Trade Contract, and before materials and/or equipment are delivered to the site, submit to the CTDOT PM certifications of compliance with applicable standard technical information on equipment to be furnished and tests for materials to be used, if materials and/or appurtenances are other than brand names specified.

B. Where the phrases "or equal" or "of equal quality" appear, substitution may be made only by approval of the CTDOT PM. Such substitution will be considered only when submitted with full and complete technical data and information for evaluation prior to installation. (See Section 01 25 00 Substitution Procedures)

C. An independent testing company, approved by the CTDOT PM, shall obtain samples and provide sieve analysis for the granular materials to be used.

D. An independent testing company, approved by the CTDOT PM, shall provide compaction tests as required.

E. An independent testing company, approved by the CTDOT PM, shall provide current concrete design mix with a 7 day and 2 - 28 day compressive strength tests for any concrete requiring reinforcing steel.

F. Provide minimum of 48-hour notice to CTDOT PM, and a written authorization notice to proceed from the affected utility, before interrupting any utility.

G. Submit written results of all tests on the installed utilities and appurtenances to the CTDOT PM.

H. Verify that all materials and equipment will be available in time for orderly installation during the course of the work.

1.5 JOB CONDITIONS

A. Pipe lengths indicated on the drawings are for information only. Furnish lengths as required.

B. Perform no pipe work in fill areas until the embankment or fill has been completed to at least 2 feet above the top of the pipe and has been properly compacted. The CTDOT PM will request compaction tests at the Trade Contractor's expense. (See Section 01 45 00 Quality Control)

C. Site Information: Data on indicated subsurface conditions are not intended as representations or warranties of accuracy or continuity between soil borings. It is expressly understood that the Owner shall not be responsible for interpretations or conclusions drawn therefrom by the Trade Contractor. Data are made available for the convenience of the Trade Contractor. Additional test borings and other exploratory work may be made by the Trade Contractor at no cost to the Owner.

D. Existing Utilities: Locate existing underground utilities in the areas of work. If utilities are to remain in place, provide adequate means of protection during earthwork operations.

1. The Trade Contractor will contact Call Before You Dig (1-800-922-4455) or Dial 811 prior to excavation.

2. The Trade Contract Documents show existing underground utilities based on above ground observations or record drawings. The Trade Contractor shall anticipate that the actual location or existence of any utility may vary from that shown. Should uncharted, or incorrectly charted, piping or other utilities be encountered during excavation, consult the utility owner immediately for directions. Cooperate with the Owner and utility companies in keeping respective services and facilities in operation. Repair damaged utilities to the satisfaction of the utility owner.

3. Do not interrupt existing utilities serving facilities occupied and used by the Owner or others, except when permitted in writing by the affected utility and then only after acceptable temporary utility services have been provided.

4. Demolish and completely remove from the site existing underground utilities indicated to be removed. Coordinate with utility companies for shut-off of services if lines are active.

5. If pipe adjustment is necessary due to the locations of other utilities, secure approval from the CTDOT PM.

E. Do not change pipe sizes without securing written approval of the CTDOT PM.

F. Use of Explosives: Do not bring explosives onto the site or use in work without prior written permission from authorities having jurisdiction. Trade Contractor is solely responsible for handling, storage, and use of explosive materials when their use is permitted.

G. Protection of Persons and Property: Barricade open excavations occurring as part of this work and post with warning lights as required in Section 01 55 26 – Traffic Control as modified herein.

1. Operate warning lights as recommended by authorities having jurisdiction.

2. Protect structures, utilities, sidewalks, pavements, and other facilities from damage caused by settlement, lateral movement, undermining, washout and other hazards created by earthwork operations.

H. Refer to Section 01 57 26 – Site Watering For Dust Control for dust control procedures during construction.

I. Refer to Section 31 11 00 – Clearing and Grubbing for procedures regarding the protection of existing trees and vegetation.

J. Trade Contractor shall comply with the latest rules of the Connecticut Occupational Safety and Health Administration (CONN-OSHA).

1.6 TESTING LABORATORY SERVICES (See Section 01 45 00 Quality Control)

At least 1 passing compaction test shall be conducted in each lift for each 20 cubic yards of material. The Trade Contractor shall conduct a sieve analysis for the subbase materials to insure that the materials are in accordance with the specifications and that compaction requirements can be met. All testing will be run at the Trade Contractor's expense.

PART 2 - PRODUCTS

2.1 SUITABLE BACKFILL

A. Suitable backfill shall consist of on-site or borrow material of soil or soil-rock mixture free from organic material and other deleterious substances. The material shall contain no rocks or lumps larger than 3 inches in diameter. Material must be approved by the CTDOT PM prior to use.

Sieve No.	Percent Passing Sieve	Sieve (metric)
3 inches	100.00	75 mm
No. 4	45 - 75	4.75 mm
No. 100	0 - 12	150 mm
No. 200	0 - 6	75 mm

B. Borrow material shall meet the requirements of this section and be granular in nature and show evidence of satisfactory compaction.

2.2 GRANULAR BACKFILL

Granular Backfill shall consist of broken or crushed stone, broken or crushed gravel, or reclaimed miscellaneous aggregate in conformance with the requirements of Section 31 23 23 – Fill.

2.3 PIPE BEDDING

Pipe bedding shall be No. 6 crushed or broken stone conforming to the requirements of Section 31 23 23 – Fill.

2.4 CONCRETE FOR ENCASEMENT AND THRUST BLOCKS

Concrete shall be termed Class ‘C’ (3000 psi) and meet the requirements of Section 03 30 00, Cast-in-Place Concrete.

2.5 REINFORCEMENT

Reinforcing bars shall meet the requirements of Section 03 20 00.

2.6 POLYVINYL CHLORIDE PIPE (PVC)

PVC pipe shall be Pressure Class 200, SDR 21 pipe manufactured from virgin PVC compound with a cell classification of 12454-B as specified in ASTM Specification D1748. It shall conform to ASTM D2241 for physical dimensions and tolerances and shall be Iron Pipe Size (IPS). Gaskets shall conform to ASTM F477. Joint design shall be tested to the requirements of ASTM D3139.

Fittings shall be PVC, Class 200, IPS with bells conforming to ASTM F477.

A dresser type coupling shall be installed between the wet well and the valve chamber.

2.7 RESTRAINED JOINTS

Restrained joints shall be provided by a clamping ring and an additional ring designed to seat on the bell end of the pipe. The rings shall be connected with T-Head bolts or rods. Restraining devices shall provide full (360°) support around the circumference of the pipe. No point loading shall be permitted. Restraint of mechanical joint fittings shall be provided by a clamping ring installed on the PVC pipe and connected to the mechanical joint fitting with T-Head bolts or rods.

Restraining devices shall meet or exceed the requirements of UNI-Bell B-13 "Recommended Standard Performance Specification for Joint Restrainers for Use with PVC Pipe." Restraining devices shall be Uni-Flange Series 1300 or 1350 or approved equal.

2.8 GEOTEXTILE (SEPARATION – HIGH SURVIVABILITY)

A. Geotextile shall conform to the requirements of Section 31 35 19.17.

2.9 WARNING/IDENTIFICATION TAPE WITH TRACER WIRE

A. Tape shall be an inert, non-metallic plastic film formulated for prolonged underground use that will not degrade when exposed to alkalis, acids and other destructive substances commonly found in soil.

B. Tape shall be puncture-resistant and shall have an elongation of two times its original length before parting.

C. Tape shall be colored to identify the type of utility intended for identification. Printed message and tape color shall be as follows:

Printed Message	Tape Color
Caution: Waterline Buried Below	Blue
Caution: Gas Buried Below	Yellow
Caution: Sewerline Buried Below	Green
Caution: Cathodic Protection Cable Buried Below	Red
Caution: Electric Line Buried Below	Red

D. Ink used to print messages shall be permanently fixed to tape and shall be black in color with message printed continuously throughout.

E. Tape shall be a minimum of 4 mil thick x 6-inches wide with a printed message on one side.

F. Tracer wire shall be #14 AWG solid copper UF type wire with cross-linked polyethylene insulation. The insulation shall be white or yellow in color.

G. Wire splices (at pipe tees, crosses and laterals) shall be accomplished using a direct bury silicone-filled capsule tube with standard wire nut or silicone-filled wire nut connectors of the appropriate size.

PART 3 - EXECUTION

3.1 GENERAL

A. Prior to all work in this Section, become familiar with all site conditions, materials and equipment to be installed, procedures of installation and scheduling of work.

B. Do not cover any work until it has been observed by the CTDOT PM. Any such covered work will be uncovered at no additional cost to the Owner.

3.2 SEPARATION OF WATER MAINS AND SEWERS

A. General:

The following factors should be considered in providing adequate separation:

1. Materials and type of joints for water and sewer pipes,
2. Soil conditions,
3. Service and branch connections into the water main and sewer line,
4. Compensating variations in the horizontal and vertical separations,
5. Space for repair and alterations of water and sewer pipes,
6. Off-setting of pipes around manholes.

B. Parallel installation:

Water mains shall be laid at least 10 feet horizontally from an existing or proposed manhole or sanitary sewer. This distance can be reduced to 5 feet for storm water. The distance shall be measured edge to edge. In cases where it is not practical to maintain a 10 foot separation, the reviewing authority may allow deviation on a case-by-case basis, if supported by data from the design engineer. Such deviation may allow installation of the water main closer to a sewer, provided that the water main is laid in a separate trench or on an undisturbed earth shelf located on one side of the sewer at such an elevation that the bottom of the water main is at least 18 inches above the top of the sewer.

C. Crossings:

Water mains crossing sewers shall be laid to provide a minimum vertical distance of 18 inches between the outside of the water main and the outside of the sewer. This shall be the case where the water main is either above or below the sewer. At crossings, one full length of water pipe shall be located so both joints will be as far from the sewer as possible. If the sewer main is over the water main, the first sewer pipe joints on each side of the water main must be concrete encased. Special structural support for the water and sewer pipes may be required. Water mains shall not pass through sewer manholes or be submerged in basins containing sewage or other grossly contaminated or hazardous material.

D. Exception:

The Agency of Natural Resources must specifically approve any variance from the requirements of this section when it is impossible to obtain the specified separation distances. Where sewers are being installed and separation requirements cannot be met, the sewer materials shall be water main pipe or equivalent and shall be pressure tested to ensure water tightness.

E. Force Mains:

There shall be at least a 10 foot horizontal separation between water mains and sanitary sewer force mains. There shall be an 18 inch vertical separation at crossings.

3.3 TRENCH EXCAVATION (See Section 31 23 16.13 – Trenching)

A. Prior to opening an excavation, effort will be made to determine where underground installations are located. When the excavation approaches the estimated location of such an installation, the exact location shall be determined and when it is uncovered, proper supports shall be provided for the existing installation. Utility companies shall be contacted and advised of proposed work prior to the start of actual excavation. (Call Before You Dig (1-800-922-4455) or Dial 811).

B. Trees, boulders, and other surface encumbrances, involved in excavation work or in the vicinity thereof at any time during operations, shall be removed before excavating is begun.

C. In excavations, excavated or other material shall be effectively stored and retained at least 2 feet or more from the edge of the excavation.

D. Diversion ditches, dikes, or other suitable means shall be used to prevent surface water from entering an excavation and to provide adequate drainage of the area adjacent to the excavation. Water shall not be allowed to accumulate in the excavation.

E. Earth excavated shall be separated into topsoil and other clearly distinguishable soil types such that the best material may be used for backfill operations.

F. Excavate the trench 6 inches below the level of the distribution pipe and provide a minimum width for working and compacting backfill. Provide a maximum width of 2 feet beyond the outside of the pipe.

G. If ledge, boulders or large stones are encountered, remove them to provide a minimum of 6 inches of clearance on all sides of the pipe. Backfill and thoroughly compact with approved backfill any excess material to be removed.

3.4 PIPE TRENCH BEDDING CLASSES

A. Unless otherwise directed, the pipe trench bedding shall be as detailed on the Trade Contract Documents.

B. Concrete encasement, where required by the Project Owner, shall consist of Class C concrete with a minimum encasement of 6 inches on all sides of the pipe.

3.5 PIPE INSTALLATION

A. Place bedding material below the bottom of the pipe. Smooth the bottom of the stone bed to provide continuous support under the pipe.

B. Carefully lower the pipe into the trench, avoiding disturbance of the bed and trench walls, and damage to the pipe. Lay the pipe with the bells on the upgrade end.

C. Clean the coupling ring groove and install the rubber gasket. Lubricate the gasket with the lubricant supplied by the manufacturer of the pipe. Taking care to avoid the entrance of foreign material, join the sections. Check joints to insure proper seal. For ductile iron water mains install 2 brass wedges per joint.

D. Where a gland is used at a valve or fitting, the gland and rubber gasket will then be placed on the spigot end of the pipe. The pipe will then be pushed forward to seal the spigot end in the bell and the gasket pressed into place within the bell. The gland will then be moved into place and bolted. Tighten the bolts to a torque range of 60-90 foot pounds.

E. When pipe laying is not in progress, seal the open ends of the pipe with a water tight plug.

F. After installation of the pipe to the proper line and grade, place additional stone bedding to the crown of the pipe, carefully tamping under the haunches. Where Class C bedding is authorized, compact with an engine driven mechanical compactor to 90% maximum density (Standard Proctor).

G. Place the initial backfill above the pipe, ensuring the material is free of roots, stones, organic or frozen material.

H. Backfill the trenches in lifts. Compact each lift with an engine driven mechanical compactor to 90% maximum density where the trench will not be under a paved area, and to 95% maximum density where the trench is under a paved area (Standard Proctor). If trench is located in the road bed of an existing roadway, the fill below the existing road shall be gravel to the depth shown on the detail or as ordered by the CTDOT PM. The gravel shall be compacted with an approved power roller weighing between 8 and 10 tons.

3.6 TESTING FORCE MAINS

A. After the pipe has been laid and 7 days after the concrete thrust blocks and anchors have been placed, the force main shall be hydrostatically tested.

B. Trade Contractor shall supply all necessary apparatus to perform the hydrostatic test.

C. Test pressure shall be 1.5 times the highest working pressure in the section or a minimum of 50 pounds per square inch, measured at or near the high point in the system. Test shall be minimum 2 hours in duration.

D. Each valved section of pipe shall be filled with water slowly and the specified test pressure, based on the elevation of the lowest point of the line or section under test and corrected to the elevation of the test gauge, shall be applied by means of a pump connected to the pipe. Before applying the specified test pressure, air shall be expelled completely from the pipe valves.

E. Allowable leakage shall be computed by the formula: $Q = N*D*(P)^{1/2} / 7400$ where Q is leakage in gallons per hour, N is number of joints in the length of pipe tested, P is the average test pressure during the leakage test in pounds per square inch, and D is nominal diameter of the pipe.

F. All exposed pipe, fittings, valves, and joints shall be examined carefully during the test. Any damaged or defective pipe, fittings, or valves that are discovered following the pressure test shall be repaired or replaced with sound material and the test shall be repeated.

3.7 WARNING/IDENTIFICATION TAPE

A. Tape shall be placed at the top of the pipe zone 12-inches above and centered over the utility intended for identification.

B. Tape shall be installed with the printed side up and run continuously along the entire length of the utility intended for identification. Tape shall be installed on the main piping and all appurtenant laterals, including blowoffs, air valve assemblies, fire hydrants, and services. Tape splices shall overlap a minimum of 24-inches for continuous coverage.

C. Tape shall be installed prior to placement of the Trench Zone Backfill.

D. Tracer wire shall be installed with all water mains.

E. Wire shall be placed on the top centerline of the pipeline and shall run continuously along the entire length of pipe prior to placement of trench backfill. Wire shall be mechanically and electrically continuous throughout the pipeline, including within pipe casings.

F. Tracer wire shall be secured to the pipe at 1.8m (6') intervals with plastic adhesive tape, duct tape or plastic tie straps. The wire may alternately be secured to the pipe by looping the tracer wire around itself such that tracer wire remains continuous atop the pipe during backfill operations.

G. Tracer wire access ports shall be installed in accordance with the Standard Drawings within the concrete splash pad of all fire hydrants installed as a part of the work. In addition, tracer wire may terminate within meter boxes, blow off boxes, CP test boxes or air valve enclosures as shown on the Approved Drawings or as directed by the CTDOT PM at intervals of not more than 1,000'.

H. Locations of all tracer wire access ports installed shall be noted on the field record drawings. Wire shall extend into the access port and shall terminate with a coiled 24-inch length of wire. All tracer wire not attached to piping shall be installed, without splices, within a conduit at a minimum depth of 24-inches in accordance with the Standard Drawings.

I. Splices shall be installed only when necessary and shall be made using wire approved connectors.

J. The Trade Contractor shall test tracer wire for electrical continuity in the presence of the CTDOT PM prior to the installation of any paving over atop pipelines or appurtenances.

K. Testing shall be accomplished using a device capable of detecting improper connections or ground fault interruptions.

3.8 STABILIZATION

A. All disturbed areas shall be stabilized as noted on the Trade Contract Drawings or appropriate Section of the Specifications.

3.9 CLEAN UP

All extraneous material or construction debris shall be removed from the site before completion of construction as directed by the CTDOT PM. Disposal of this material is the responsibility of the Trade Contractor.

END OF SECTION 33 41 20

SECTION 33 44 19.21 – HYDRODYNAMIC SEPARATOR

PART 1 - GENERAL

1.1 SUMMARY

A. Description: Hydrodynamic separators are proprietary devices manufactured for stormwater treatment. The hydrodynamic separator shall be a precast concrete structure and include an internal chamber with features that induce a swirling, circular, or spiraling flow pattern in the stormwater flow that separate and trap sediment and pollutants in a chamber that can be accessed for later removal.

B. This item will consist of furnishing and construction of a hydrodynamic separator, a flow diversion structure, manholes and pipes in the location, grades, treatment capacity and to the dimensions and details shown on the contract drawings, and in accordance with these specifications or as directed by the Engineer. The work also includes the preparation of hydraulic design calculations for the hydrodynamic separator(s) and flow diversion structure(s) as specified herein.

C. The hydrodynamic separator shall be assembled and installed in strict compliance with the Manufacturer's instructions unless otherwise directed by these specifications or by the Engineer. Internal flow controls / diversion components, external appurtenances, concrete manhole riser sections, manhole frames and covers, reinforcing, threaded inserts, lifting and seating fixtures, non-shrink grout, and all other necessary materials and equipment to complete the work shall be included.

1.2 RELATED REQUIREMENTS:

A. Division 1 for General Requirements

B. See Section 04 05 11 Masonry Mortaring and Grouting, for grouting requirements

C. See Section 31 23 23 Fill

D. See Section 33 35 19.17 Geotextile (Separation – High Survivablity)

E. See Section 33 39 00 Storm Drainage Structures

F. See Section 33 41 13 Public Storm Utility Drainage Piping

1.3 SUBMITTALS

A. See Section 01 33 00 - Submittal Procedures and Section 01 33 00.13 – Document Control as amended herein.

B. Working Drawings: Working drawings in accordance with Division 1 shall be required for the system selected by the Contractor. The working drawings shall include the HGL analysis and

all other computations in strict accordance with the “Hydraulic Design” section of this special provision, including a completed Form B – Contractor Proposal.

C. If revisions to the layout of the system are required to accommodate the selected separator, the working drawings shall also include plans that show the required revisions. These plans shall show the revised position of the hydrodynamic separator unit(s), and all revisions to connecting structures, pipes, elevations, and details, including the design within the flow diversion structure.

C. Working drawings shall also show details for construction, reinforcing joints, internal and external components, any cast-in-place appurtenances, locations and elevations of pipe openings, access manhole locations and elevations, and type / method of sealing pipe entrances.

D. Working drawings for each hydrodynamic separator on the project shall have all appropriate vertical dimensions referenced with elevations that are consistent with the project plans. In addition to any other structural, material or installation requirements, the working drawings shall clearly indicate the following information:

1. The elevation and flow rate when internal flow bypass would occur within the device.
2. The location, dimensions and volume (capacity) of the sediment storage area within the device.

E. The working drawings shall be sealed by a professional engineer licensed in the state where the devices are manufactured and that said engineer shall certify the device meets the minimum requirements of the ConnDOT Standards.

F. The working drawing submission by the Contractor shall consist of the following documents:

1. Working drawings for each hydrodynamic separator proposed for installation on the project.
2. Hydraulic design calculations including the head loss documentation and completed Hydrodynamic Separator Design Data Sheets (Form B – Contractor Proposal) with professional engineer signature for each hydrodynamic separator.
3. Copies of the pertinent construction plan, profile, cross section and detail sheets that have been annotated with any proposed drainage revisions that are required for the installation of the proposed hydrodynamic separator(s). If no changes are required, the submittal shall note same.
4. An Operations and Maintenance Manual for each hydrodynamic separator describing operations, inspection, maintenance procedures and any applicable warranty information.

G. Acceptance of the working drawing submission by the Engineer must be obtained by the Contractor prior to the fabrication of each hydrodynamic separator and diversion structure.

PART 2 - PRODUCTS

2.1 PERFORMANCE REQUIREMENTS

A. The stormwater treatment performance of the selected hydrodynamic separator shall be based on the water quality flow (WQF) as defined and calculated in accordance with the Department’s current version of the Drainage Manual.

B. The hydrodynamic separator shall be designed to treat the entire WQF as indicated on the contract drawings or specifications, without bypass, either through the separator's internal components or at the flow diversion structure.

C. Hydrodynamic separator systems and models that have been pre-approved for use on Department projects and their corresponding maximum allowable WQF's for stormwater treatment are shown in Table 2, "PERFORMANCE MATRIX FOR CONNDOT APPROVED HYDRODYNAMIC SEPARATORS". The Engineer will reject any proposed hydrodynamic separator system/model that is not listed in Table 2.

D. For more severe storm events that produce flows up to and including the drainage design flow (DDF) and which result in flows greater than the WQF being directed to the hydrodynamic separator from the flow diversion structure, the hydrodynamic separator shall be capable of conveying the portion of the DDF directed to it without surcharging the upstream storm drainage system and re-suspending previously trapped sediment.

E. The WQF to be treated and the portion of the DDF directed to the hydrodynamic separator when the drainage system is operating at its design flow are shown on the Hydrodynamic Separator Design Data Sheets (Form A - Design). A separate form for each hydrodynamic separator site on the project is attached to this specification.

F. Sediment Storage Capacity: Settleable solids shall accumulate in a location within the hydrodynamic separator structure that is accessible for cleaning and maintenance but not susceptible to resuspension. Direct access through openings in the precast concrete unit shall be provided to the sediment storage chamber and all other chambers to facilitate maintenance.

G. The standard sediment storage capacities for Department pre-approved hydrodynamic separator systems/models are shown in Table 3, "STANDARD SEDIMENT STORAGE CAPACITY FOR CONNDOT APPROVED HYDRODYNAMIC SEPARATORS". The sediment storage capacities listed in Table 3 are values based on standard structure dimensions and anticipated maintenance requirements.

H. Some standard hydrodynamic separator models may be modified as determined by the Manufacturer to increase the sediment storage capacity. When a modification is proposed by increasing the depth of the standard structure, the sediment storage capacity of the proposed structure shall be determined in accordance with Table 4, "SEDIMENT STORAGE CAPACITY CALCULATION".

I. The Contractor shall be responsible for verifying the standard sediment storage capacity of the hydrodynamic separator unit(s) and coordinating any proposed modifications to increase sediment storage capacity with the Manufacturer(s). All proposed modifications and revised sediment storage capacity determinations shall be clearly documented in the working drawing submission to the Department.

J. The minimum sediment storage capacities required for each hydrodynamic separator site on the project are shown on the Hydrodynamic Separator Design Data Sheets (Form A – Design) attached to this specification.

K. Hydraulic Design: The Contractor shall prepare or have prepared a hydraulic grade line (HGL) analysis for an evaluation of the selected hydrodynamic separator and the design of the flow diversion structure as described in this section. The HGL analysis shall be performed for both the WQF and the DDF. The analysis shall be consistent with the methodology described in Section 11.12 of the Department's Drainage Manual.

L. Head loss coefficients, to be used in the HGL analysis, shall be determined in accordance with Section 11.12.6 of the Department Drainage Manual for all structures except the hydrodynamic separator, which shall be obtained from the Manufacturer. Documentation shall be submitted demonstrating how the coefficient was derived either through calculation and/or testing data. A benching factor of 1.0 shall be applied to the flow diversion structure.

M. The HGL analysis (or portion of) that was performed for the design of the storm drainage systems and preparation of the construction plans, including the design of the flow diversion structure and evaluation of a "generic" hydrodynamic separator, is shown on the Hydrodynamic Separator Design Data Forms (Form A – Design) attached to this specification.

N. Since the selected hydrodynamic separator and associated connecting pipes and structures may be different in type, configuration and performance than the one assumed in the design phase of the project, the hydraulic calculations performed for the drainage design must be replicated and revised to reflect any adjustments necessary to the drainage design for installation of the selected system, such as different flow-line elevations, head loss coefficient, pipe sizes, etc. The selected hydrodynamic separator shall be designed so as not to change the drainage system upstream of the flow diversion structure or to increase the HGL elevation upstream of the flow diversion structure. Any modifications necessary to the overall drainage design as a result of the Contractor selected hydrodynamic separator shall be the responsibility of the Contractor.

O. The new HGL analysis must demonstrate the following conditions:

1. The hydrodynamic separator can treat the WQF with no bypass. The HGL elevation at the flow diversion structure for the WQF shall be below the weir elevation and/or elevation of flow bypass that is listed in the design data form or shown in the plans, so that all of the WQF is directed to the hydrodynamic separator for treatment. The HGL elevation in the hydrodynamic separator at the WQF shall be below the elevation of internal bypass so that all of the WQF is treated by the system.

2. When the drainage system is operating at the DDF, the hydraulic computations must show that the HGL elevation at the flow diversion structure is lower than or equal to the HGL elevation shown on Form A for the DDF and the HGL elevation in the hydrodynamic separator must be a minimum of one foot below the top (ground) elevation of the structure. A HGL elevation in the flow diversion structure for the DDF which is higher than the corresponding HGL elevation shown on Form A may be approved by the Engineer only if hydraulic computations are submitted showing that the higher HGL elevation will provide a minimum of one foot of freeboard below the top (ground) elevation of the flow diversion structure and the upstream drainage structures, satisfying the design criteria stated in the Connecticut Department of Transportation Drainage Manual. To demonstrate compliance, the hydraulic analysis shall be extended to a point upstream in the drainage system that is not influenced by the proposed changes and where the results converge with the previous design analysis. In such a case, the Contractor shall request a copy of the design analysis from the Department. A freeboard less than one foot may be accepted by the Engineer on a case by case basis provided that a justification of the reason has been included with the HGL analysis.

3. When the drainage system is operating at the DDF, the resulting HGL elevation and flow split at the flow diversion structure has been designed such that the portion of the DDF directed to the hydrodynamic separator does not exceed the maximum flow shown on the Hydrodynamic Separator Design Data Sheets (Form A - Design). Documentation, however, must be provided that the flow in excess of the WQF can pass through the device without washout of the previously captured sediment or the device is equipped with an internal bypass to route the excess flow around the treatment chamber.

P. Upon conclusion of the HGL analysis, the Hydrodynamic Separator Design Data Sheets (Form B – Contractor Proposal) shall be completed by entering the HGL analysis data and other required information.

2.2 APPROVED PRODUCTS AND MANUFACTURERS

A. Basis-of-Design Product: Subject to compliance with requirements, provide a product from Table 1 – ConnDOT List of Approved Hydrodynamic Separators:

B. Approved Products and Manufacturer Information: Proprietary hydrodynamic separators currently approved by the Department are listed in Table 1 "CONNDOT LIST OF APPROVED HYDRODYNAMIC SEPARATORS". Company contact information is provided for convenience. As the company information frequently changes, the Department is not responsible for its accuracy.

C. The Engineer will reject any proposed hydrodynamic separator that is not listed in Table 1.

D. The listed products have been approved for use on Department projects based on only a general review of the product's construction, function and treatment capabilities. Therefore, the approved list shall not be construed to mean that all products appearing on the list are suitable to any specific project site or drainage design.

2.3 MATERIALS

A. Materials utilized to fabricate, construct and install the precast concrete hydrodynamic separator including but not limited to precast concrete units, brick, concrete masonry units, manhole frames and covers shall meet the requirements for Storm Drainage Structures, Section 33 49 00.

B. The Contractor shall provide a Materials Certificate in accordance with Section 33 49 00 Submittal Procedures for each unit delivered to the project. Upon request, the Contractor shall also provide Certified Test Reports for the fine and coarse aggregates and all cementitious materials, and the concrete mix design indicating the weight of each component, used in the construction of the precast units for review. The structures shall not be shipped until released by the Contractor's Quality Control Manager or designee.

C. The wall and slabs of the precast concrete units shall be designed to sustain HS20-44 (MS18) loading requirements.

D. Bedding, Manholes and Catch Basins shall conform to Section 33 49 00 Storm Drainage Structures.

E. Compacted Granular fill and Granular fill shall conform to the requirements of Section 31 23 23 Fill.

F. Non-shrink grout shall conform to the requirements of Section 04 05 11.Masonry Mortaring and Grouting

G. Drainage pipe, sealant and gaskets shall conform to the requirements of Section 33 41 13 Public Storm Utility Drainage Piping.

H. Mortar shall conform to the requirements of Section 04 05 11 Masonry Mortaring and Grouting.

I. Sealant used for the hydrodynamic separator unit(s) shall be resistant to oil and other hydrocarbons and conform to the requirements of ASTM C-443.

J. Geotextile shall conform to Section 31 35 19.17 Geotextile (Separation - High Survivability)

Table 1 – CONNDOT LIST OF APPROVED HYDRODYNAMIC SEPARATORS

HYDRODYNAMIC SEPARATOR PRODUCT NAME	COMPANY INFORMATION
Downstream Defender	Hydro International 94 Hutchins Drive Portland, Maine 04102 (207) 756-6200 http://www.hydrointernational.biz/us/index_us.php
FloGard Dual-Vortex Hydrodynamic Separator	KriStar Enterprises, Inc. 4020 Riverclub Drive Cumming, Georgia 30041 (770)-889-4338 http://www.kristar.com/
High Efficiency CDS	Contech Stormwater Solutions 200 Enterprise Drive Scarborough, Maine 04074 (800)-925-5240 http://www.contech-cpi.com/stormwater/13
Vortechs	
Vortsentry	
Hydroguard	Hydroworks, LLC 525Boulevard Kenilworth, NJ 07033 (888)-290-7900 / (908)-272-4411 http://www.hydroworks.org/
Stormceptor OSR	Rinker Materials – Stormceptor 69 Neck Road Westfield, MA 01085 (800)-909-7763 / (413) 246-7144 www.rinkerstormceptor.com
Stormceptor STC	
V2B1	Environment 21 8713 Read Road, P.O. Box 55 East Pembroke, New York 14056-0055 (800)-809-2801 / (585)-815-4700 www.env21.com

2.4 HYDRODYNAMIC SEPARATOR SELECTION

A. To ensure compliance with the specifications, the selection process of a proprietary hydrodynamic separator for installation on a Department project is outlined by the following steps:

1. First, select the available product(s) from Table 2 (PERFORMANCE MATRIX FOR CONNDOT APPROVED HYDRODYNAMIC SEPARATORS) that meet or exceed the WQF treatment specified on the Hydrodynamic Separator Design Data Sheets (Form A -

Design) attached to this specification. The Engineer shall reject any proposed hydrodynamic separator system/model that is not listed in Table 2.

2. Using Table 3 (STANDARD SEDIMENT STORAGE CAPACITY FOR CONNDOT APPROVED HYDRODYNAMIC SEPARATORS), check whether the initially selected product(s) in Step 1, meet or exceed the minimum sediment storage requirement specified on the Hydrodynamic Separator Design Data Sheets (Form A - Design). In some cases, the required sediment storage capacity will govern the model size required for the project. In lieu of selecting a larger model to accommodate the sediment storage requirement, the Contractor may submit working drawings as recommended by the Manufacturer, showing how a standard model has been modified to satisfy the sediment storage requirement. When a modification is proposed by increasing the depth of the standard structure, Table 4 (SEDIMENT STORAGE CAPACITY CALCULATION) shall be utilized to determine the sediment storage capacity of the proposed structure.

3. Hydrodynamic separator system/models pre-approval by the Department shall not be construed to mean that all products appearing on Tables 2 and 3 are suitable to any specific project site or drainage design. The Contractor shall verify the constructability of the selected hydrodynamic separator in relation to dimensional, structural, geotechnical and right-of-way constraints at each installation site. If revisions to the drainage design, including the system layout, are required to accommodate the selected separator, the Contractor shall provide working drawings showing the revised layout, including the position of the hydrodynamic separator and the number, positions and types of connecting structures, the design of the flow diversion structure, and any other components of the system within the pay limits. The working drawings shall be prepared in sufficient detail to perform a hydraulic analysis and confirm that the layout will fit the constraints of each site.

4. Upon determination that the WQF, sediment storage and constructability requirements have been met, the Contractor shall prepare or have prepared, a HGL analysis in accordance with the hydraulic requirements of this specification, that includes the selected hydrodynamic separator and any revisions to the drainage design needed for the installation.

5. The Hydrodynamic Separator Design Data Sheets (Form B – Contractor Proposal) shall be completed and signed by a professional engineer licensed by the State of Connecticut.

6. Acceptance of the computations by the Engineer must be obtained by the Contractor prior to the purchase or installation of any units.

CONNECTICUT DEPARTMENT OF TRANSPORTATION HYDRODYNAMIC SEPARATOR DESIGN DATA SHEETS (FORM A - DESIGN)

Project No	*301-0124*	Route No.	*n/a*	Prepared By:	*SMD*	Date:	*9/19/2014*
Town	*New Haven*	Location/Station	*Site 1*	Checked By:	*JFK*	Date:	*9/19/2014*
				Company:	*ConnDOT*		

HYDROLOGIC DATA

Drainage Area (Acres)	*6.39*
Percent Impervious Area %	*80*
Time of Concentration (min.)	*12*
Drainage Design Flow (cfs)	*12.53*
Drainage Design Frequency (yr)	*10*
Water Quality Flow (cfs)	*1.82*

HYDRODYNAMIC SEPARATOR (HS)

Coordinates:		Datum:	
X:	*XXX,XXX*	Horiz.	*State Plane NAD83*
Y:	*YYY,YYY*	Vert.	*NAVD-1988*
Head loss coefficient		*1.75*	
Sediment Storage Capacity (cy):		HGL Elevation:	
Required	*5.1*	@ WQF	*2.31*
		@ Design Q	*2.96*
Maximum Flow to HS at Drainage Design Flow (cfs)			*3.83*

Comments:

FLOW DIVERSION STRUCTURE

Type	*6' Diameter Manhole*		
Weir and/or Bypass Elev.	*2.40*		
Weir Length (ft.)	*6*	Weir Coeff. (C)	*3.00*
HGL Elevation:		Flow Split @ Drainage Design Flow	
@ WQF	*2.31*	To HS	*3.83*
@ Design Q	*3.01*	Bypassing HS	*8.70*

Comments:

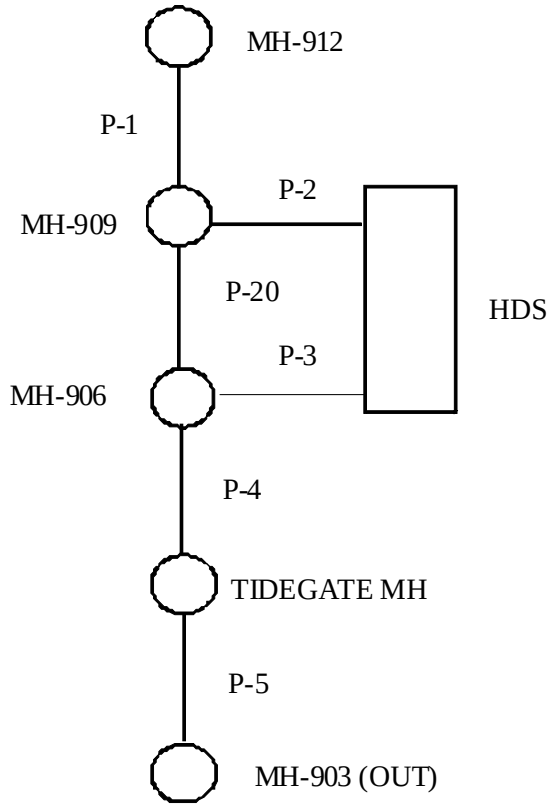

Sketch (NTS)

Sheet 1 of 2

CONNECTICUT DEPARTMENT OF TRANSPORTATION HYDRODYNAMIC SEPARATOR DESIGN DATA (FORM A - DESIGN)

Project No:	301-0124	Location/Station:	Site 1	Date:	9/19/2014

HYDRAULIC GRADE LINE ANALYSIS

Pipe	Downstream Str.	Pipe Size (in)	Flow (cfs)	Ground Elev. OUT (ft)	Invert Elev. OUT (ft)	HGL OUT (ft)	Depth OUT (ft)	Vel. Head OUT (ft)	EGL OUT (ft)	Length (ft)	Friction Slope (ft/ft)	Friction Loss (ft)	EGL IN (ft)	Vel. Head IN (ft)	HGL IN (ft)	Depth IN (ft)	Invert Elev. IN (ft)	Ground Elev. IN (ft)	Upstream Str.	Headloss Coeff.	Str. headloss (ft.)
WQF - SCENARIO																					
P-1	MH-909	36	1.82	8.90	0.70	2.37	1.67	0.00	2.37	14	0.0000		2.37		2.37	1.57	0.80	9.30	MH-912	0.678	0.00
P-2	HDS	12	1.82	8.90	0.60	2.30	1.70	0.08	2.39	6	0.0020		2.40		2.31	1.61	0.70	8.90	MH-909	1.750	0.01
P-3	MH-906	12	1.82	8.90	0.50	2.15	1.65	0.08	2.23	6	0.0020		2.24		2.16	1.56	0.60	8.90	HDS	0.717	0.01
P-4	TG MH	36	1.82	8.80	0.45	2.11	1.66	0.00	2.11	4	0.0000		2.11		2.11	1.61	0.50	8.90	MH-906	0.200	0.00
P-5	MH-903	36	1.82	8.40	0.40	2.11	1.71	0.00	2.11	4	0.0000		2.11		2.11	1.66	0.45	8.80	TG MH	0.200	0.00
P-20	MH-906	36	0	8.90	0.50					6							0.70	8.90	MH-909		
10 YEAR DESIGN FLOW - SCENARIO																					
P-1	MH-909	36	12.53	8.90	0.70	3.01	2.31			14							0.80	9.30	MH-912	0.200	0.00
P-2	HDS	12	3.83	8.90	0.60	2.96	2.36	0.37	3.33	6	0.0070		3.37		3.01	2.31	0.70	8.90	MH-909	1.750	0.01
P-3	MH-906	12	3.83	8.90	0.50	2.28	1.78	0.37	2.64	6	0.0070		2.69		2.32	1.72	0.60	8.90	HDS	0.717	0.01
P-4	TG MH	36	12.53	8.80	0.45	2.27	1.82	0.12	2.39	4	0.0050		2.39		2.26	1.76	0.50	8.90	MH-906	0.200	0.00
P-5	MH-903	36	12.53	8.40	0.40	2.19	1.79	0.13	2.32	4	0.0050		2.32		2.19	1.74	0.45	8.80	TG MH	0.200	0.00
P-20	MH-906	36	8.70	8.90	0.50	2.26	1.76	0.06	2.32	6	0.0000		2.35		2.27	1.57	0.70	8.90	MH-909	0.200	-0.05

Sheet 2 of 2

TABLE 2 - PERFORMANCE MATRIX FOR CONNDOT APPROVED HYDRODYNAMIC SEPARATORS

Maximum WQF (cfs)	Product Model								
	Downstream Defender	Flogard	High Eff. CDS	Hy-droguard	Stormcep-tor OSR	Stormcep-tor STC	Vortechs	Vortsen-try	V2B1
0.4	4-ft	DVS-36	2015-4G; 2015-4	HG 4	065	450	1000	VS30	2
0.5	4-ft	DVS-36	2015-4G; 2015-4	HG 4	065	900	1000	VS30	2
0.6	4-ft	DVS-36	2015-4G; 2015-4	HG 4	065	900	1000	VS40	2
0.7	4-ft	DVS-48	2015-4G; 2015-4	HG 4	140	900	1000	VS40	2
0.8	4-ft	DVS-48	2015-4G; 2015-4	HG 4	140	900	1000	VS40	2
0.9	4-ft	DVS-48	2015-4G; 2015-4	HG 4	140	1200	1000	VS40	3
1.0	4-ft	DVS-48	2015-4G; 2015-4	HG 4	140	1800	1000	VS40	3
1.1	4-ft	DVS-48	2015-4G; 2015-4	HG 4	140	1800	1000	VS40	4
1.2	6-ft	DVS-48	2015	HG 5	140	2400	1000	VS50	4
1.3	6-ft	DVS-60	2015	HG 5	140	2400	1000	VS50	4
1.4	6-ft	DVS-60	2015	HG 5	140	2400	2000	VS50	4
1.5	6-ft	DVS-60	2020	HG 5	140	2400	2000	VS50	6
1.6	6-ft	DVS-60	2020	HG 5	140	2400	2000	VS50	6
1.7	6-ft	DVS-60	2020	HG 5	250	2400	2000	VS50	6
1.8	6-ft	DVS-60	2020	HG 6	250	2400	2000	VS50	7
1.9	6-ft	DVS-60	2020	HG 6	250	3600	2000	VS60	7
2.0	6-ft	DVS-60	2020	HG 6	250	3600	2000	VS60	7
2.1	6-ft	DVS-60	2020	HG 6	250	3600	2000	VS60	9
2.2	6-ft	DVS-72	2025	HG 6	250	3600	2000	VS60	8
2.3	6-ft	DVS-72	3020, 3020-D	HG 6	250	3600	2000	VS60	8
2.4	6-ft	DVS-72	3035; 3035-D	HG 6	250	4800	2000	VS60	8
2.5	6-ft	DVS-72	3035; 3035-D	HG 6	250	4800	3000	VS60	10
2.6	6-ft	DVS-72	3035; 3035-D	HG 6	250	4800	3000	VS60	11
2.7	6-ft	DVS-72	3035; 3035-D	HG 7	250	4800	3000	VS60	11
2.8	6-ft	DVS-72	3035; 3035-D	HG 7	250	4800	3000	VS70	11
2.9	6-ft	DVS-72	3035; 3035-D	HG 7	250	4800	3000	VS70	12
3.0	6-ft	DVS-72	3035; 3035-D	HG 7	390	4800	3000	VS70	12

TABLE 2 - PERFORMANCE MATRIX FOR CONNDOT APPROVED HYDRODYNAMIC SEPARATORS (continued)

Maximum WQF (cfs)	Product Model								
	Downstream Defender	Flogard	High Eff. CDS	Hy-droguard	Stormcep-tor OSR	Stormcep-tor STC	Vortechs	Vortsen-try	V2B1
3.1	8-ft	DVS-72	3035; 3035-D	HG 7	390	4800	3000	VS70	12
3.2	8-ft	DVS-72	3035; 3035-D	HG 7	390	4800	3000	VS70	12
3.3	8-ft	DVS-72	3035; 3035-D	HG 7	390	4800	3000	VS70	14
3.4	8-ft	DVS-72	3035; 3035-D	HG 7	390	6000	3000	VS70	14
3.5	8-ft	DVS-72	3030; 3030-DV, 3030-D; 4030-D	HG 7	390	6000	3000	VS70	14
3.6	8-ft	DVS-72	4030	HG 7	390	6000	3000	VS70	14
3.7	8-ft	DVS-84	4030	HG 8	390	6000	3000	VS70	14
3.8	8-ft	DVS-84	4030	HG 8	390	6000	4000	VS70	13
3.9	8-ft	DVS-84	4030	HG 8	390	7200	4000	VS70	15
4.0	8-ft	DVS-84	4030	HG 8	390	7200	4000	VS80	15
4.1	8-ft	DVS-84	4030	HG 8	390	7200	4000	VS80	15
4.2	8-ft	DVS-84	4030	HG 8	390	7200	4000	VS80	16
4.3	8-ft	DVS-84	4030	HG 8	390	7200	4000	VS80	16
4.4	8-ft	DVS-84	4030	HG 8	390	7200	4000	VS80	16
4.5	8-ft	DVS-84	4030	HG 8	390	7200	4000	VS80	16
4.6	8-ft	DVS-84	5640-D	HG 8	390	7200	4000	VS80	17
4.7	8-ft	DVS-84	5640-D	HG 8	390	7200	4000	VS80	17
4.8	8-ft	DVS-84	5640-D	HG 8	390	7200	4000	VS80	17
4.9	8-ft	DVS-84	5640-D	HG 8	390	11000s	4000	VS80	17
5.0	8-ft	DVS-84	5640-D	HG 9	390	11000s	4000	VS80	19
5.2	8-ft	DVS-84	4040-D	HG 9	390	11000s	4000	VS80	20
5.4	8-ft	DVS-96	4040-D	HG 9	390	11000s	4000	VS100	20
5.5	8-ft	DVS-96	4045-D	HG 9	390	11000s	5000	VS100	18
5.6	8-ft	DVS-96	4045-D	HG 9	560	11000s	5000	VS100	18
6.0	8-ft	DVS-96	4040	HG 9	560	11000s	5000	VS100	18
6.1	8-ft	DVS-96	4040	HG 9	560	11000s	5000	VS100	21

TABLE 2 - PERFORMANCE MATRIX FOR CONNDOT APPROVED HYDRODYNAMIC SEPARATORS (continued)

Maximum WQF (cfs)	Product Model								
	Downstream Defender	Flogard	High Eff. CDS	Hy-droguard	Stormcep-tor OSR	Stormcep-tor STC	Vortechs	Vortsen-try	V2B1
6.3	8-ft	DVS-96	4040	HG 9	560	11000s	5000	VS100	25
6.4	10-ft	DVS-96	4040	HG 9	560	11000s	5000	VS100	25
6.5	10-ft	DVS-96	4040	HG 10	560	11000s	5000	VS100	25
6.9	10-ft	DVS-96	4040	HG 10	560	11000s	5000	VS100	25
7.0	10-ft	DVS-96	4040	HG 10	560	11000s	5000	VS100	22
7.1	10-ft	DVS-96	5042-D	HG 10	560	11000s	5000	VS100	22
7.2	10-ft	DVS-96	5042-D	HG 10	560	13000s	5000	VS100	22
7.3	10-ft	DVS-96	4045	HG 10	560	13000s	5000	VS100	22
7.5	10-ft	DVS-96	5653-D	HG 10	560	13000s	7000	VS100	22
7.7	10-ft	DVS-120	5653-D	HG 10	560	13000s	7000	VS100	22
7.8	10-ft	DVS-120	5653-D	HG 10	560	13000s	7000	VS100	50
7.9	10-ft	DVS-120	5653-D	HG 10	780	13000s	7000	VS100	50
8.0	10-ft	DVS-120	5658-D	HG 10	780	13000s	7000	VS100	50
8.2	10-ft	DVS-120	5658-D	HG 10	780	16000s	7000	VS100	50
8.5	10-ft	DVS-120	5658-D	HG 12	780	16000s	7000	VS100	50
8.6	10-ft	DVS-120	5658-D	HG 12	780	16000s	7000	VS100	50
8.9	10-ft	DVS-120	5678-D	HG 12	780	16000s	7000	VS100	50
9.0	10-ft	DVS-120	5678-D	HG 12	780	16000s	7000	VS120	50
9.2	10-ft	DVS-120	5678-D	HG 12	780	16000s	7000	VS120	50
9.5	10-ft	DVS-120	5050-DV	HG 12	780	16000s	7000	VS120	50
9.6	10-ft	DVS-120	5050-DV	HG 12	780	16000s	7000	VS120	50
10.0	10-ft	DVS-120	5050-DV	HG 12	780	16000s	9000	VS120	50
10.1	10-ft	DVS-120	5050-DV	HG 12	780	16000s	9000	VS120	50
10.5	10-ft	DVS-120	5050-DV	HG 12	780		9000	VS120	50
10.9	10-ft	DVS-120	5050-DV	HG 12	780		9000	VS120	50
11.0	10-ft	DVS-120	7070-DV	HG 12	780		9000	VS120	50
11.2	10-ft	DVS-120	7070-DV	HG 12	1125		9000	VS120	50

TABLE 2 - PERFORMANCE MATRIX FOR CONNDOT APPROVED HYDRODYNAMIC SEPARATORS (continued)

Maximum WQF (cfs)	Product Model								
	Downstream Defender	Flogard	High Eff. CDS	Hy-droguard	Stormcep-tor OSR	Stormcep-tor STC	Vortechs	Vortsen-try	V2B1
11.5		DVS-120	7070-DV	HG 12	1125		9000	VS120	50
11.8		DVS-120	7070-DV	HG 12	1125		9000	VS120	50
11.9		DVS-120	7070-DV	HG 12	1125		9000	VS120	60
12.0		DVS-120	7070-DV	HG 12	1125		9000	VS120	60
12.1		DVS-120	7070-DV	HG 12	1125		9000	VS120	60
12.5		DVS-120	7070-DV	HG 12	1125		11000	VS120	60
13.0		DVS-120	7070-DV		1125		11000	VS120	60
13.5		DVS-120	7070-DV		1125		11000	VS120	60
13.6		DVS-120	7070-DV		1125		11000	VS120	60
14.0		DVS-144	7070-DV		1125		11000	VS120	60
14.5		DVS-144	7070-DV		1125		11000		60
14.9		DVS-144	7070-DV		1125		11000		60
15.0		DVS-144	7070-DV		1125		16000		60
15.5		DVS-144	7070-DV		1125		16000		60
15.7		DVS-144	7070-DV		1125		16000		60
16.0		DVS-144	7070-DV				16000		60
16.5		DVS-144	7070-DV				16000		60
17.0		DVS-144	7070-DV				16000		
17.5		DVS-144	7070-DV				16000		
18.0		DVS-144	7070-DV				16000		
18.5		DVS-144	7070-DV				16000		
19.0		DVS-144	7070-DV				16000		
19.7		DVS-144	7070-DV				16000		
20.0		DVS-144	10060-DV				16000		
21.5		DVS-144	10060-DV				16000		
22.3		DVS-144	10060-DV				1319		
25.0			10060-DV				1319		
25.2			10060-DV				1319		

TABLE 2 - PERFORMANCE MATRIX FOR CONNDOT APPROVED HYDRODYNAMIC SEPARATORS (continued)

Maximum WQF (cfs)	Product Model								
	Downstream Defender	Flogard	High Eff. CDS	Hy-droguard	Stormcep-tor OSR	Stormcep-tor STC	Vortechs	Vortsen-try	V2B1
27.6			10060-DV				1421		
29.3			10080-DV				1421		
30.0			10080-DV				1522		
31.2			10080-DV				1522		
33.6			100100-DV				1522		
35.0			100100-DV				1624		
38.2			100100-DV				1624		
40.0			100100-DV				1726		
43.2			100100-DV				1726		
49.3			100100-DV						

TABLE 3 - STANDARD SEDIMENT STORAGE CAPACITY FOR CONNDOT APPROVED HYDRODYNAMIC SEPARATORS

Sediment Storage (cubic yards)	Product Model								
	Downstream Defender	Flogard	High Eff. CDS	Hydroguard	Stormceptor OSR	Stormceptor STC	Vortechs	Vortsentry	V2B1
6.6							1319		
6.9									
7.0									
7.1									
7.2									
7.3									14; 15; 16; 17; 18
7.5				HG 12					
7.6							1421		
7.7									
8.0									
8.3									
8.4			7070-DV						
8.6						4800			
8.7	10-ft				390		1522	VS100	
9.0									
9.5									
9.6									
9.9							1624		
10.0									
10.3		DVS-							
10.5									19; 20
11.0									
11.2							1726		
11.3						6000			
11.5									21; 22
11.8									

TABLE 3 - STANDARD SEDIMENT STORAGE CAPACITY FOR CONNDOT APPROVED HYDRODYNAMIC SEPARATORS (continued)

Sediment Storage (cubic yards)	Product Model								
	Downstream Defender	Flogard	High Eff. CDS	Hydroguard	Stormceptor OSR	Stormceptor STC	Vortechs	Vortsentry	V2B1
12.0									
12.6								VS120	25
12.9					560				
13.0									
13.4						7200			
15.0									
17.5					780				
17.8		DVS-144	10060-DV;10080-DV; 100100-DV						
20.0									
22.3									50
25.0									
25.8					1125				
26.1						11000s			
26.2									
30.0									
34.1						13000s			
34.9									60
35.0									
38.7									
40.0									
40.7						16000s			

TABLE 4 - SEDIMENT STORAGE CAPACITY CALCULATION

Product	Sediment Storage Capacity (Volume) Calculation (cubic feet)
Downstream Defender	Inside Diameter (ft^2) of Structure x Distance (ft) from Bottom of Benching Skirt to Inside Floor of Structure
FloGard® Dual-Vortex	Inside Diameter (ft^2) of Structure x 1/2 Distance (ft) from Bottom of Vortex Tube to Inside Floor of Structure
High Efficiency CDS	Inside Diameter (ft^2) of Structure x Depth (ft) of Solids Storage Sump
Hydroguard	Inside Diameter (ft^2) of Structure x 1/2 Depth (ft) Below Outer Baffle Wall
Stormceptor STC	Inside Diameter (ft^2) of Structure x 1/2 Depth (ft) Below Drop Tee Inlet Pipe
Stormceptor OSR	Inside Diameter (ft^2) of Structure x 1/2 Depth (ft) Below Drop Tee Inlet Pipe
Vortechs	Inside Diameter (ft^2) of Grit Chamber x 1/2 Depth (ft) Below Opening in Swirl Wall
Vortsentry	Inside Diameter (ft^2) of Structure x Depth (ft) of Sediment Storage Sump
V2B1	Inside Diameter (ft^2) of Structure (D1) x 1/2 Depth (ft) Below Pipe Invert
Note: 1 cubic foot = 0.037 cubic yard or 1 cubic yard = 27 cubic feet	

PART 3 - EXECUTION

3.1 DESIGN

A. The Contractor shall design and submit with the working drawings the completed: Hydrodynamic Separator Design Data Sheets (Form B – Contractor Proposal), Sheets 1 & 2 of 2 (blank).

.

CONNECTICUT DEPARTMENT OF TRANSPORTATION HYDRODYNAMIC SEPARATOR DESIGN DATA SHEETS (FORM B - CONTRACTOR PROPOSAL)

Project No		Route No.		PE Signature:	
Town		Location/Station			

Name:		Date:	
License No:		State:	
Company:			

HYDROLOGIC DATA (Copy from FORM A - DESIGN)	
Drainage Area (Acres)	
% Impervious Area	
Time of Concentration (min.)	
Drainage Design Flow (cfs)	
Drainage Design Frequency (yr)	
Water Quality Flow (cfs)	

HYDRODYNAMIC SEPARATOR (HS)			
Manufacturer			
Model Name			
Model No.			
Coordinates:		Datum:	
X:		Horiz.	
Y:		Vert.	
Sediment Storage Capacity (cy):		HGL Elevation:	
Required		@ WQF	
Installed		@ Design Q	
Head loss coefficient			

FLOW DIVERSION STRUCTURE			
Type			
Weir and/or Bypass Elev.			
Weir Length (ft.)		Weir Coeff. (C)	
HGL Elevation:		Flow Split @ Drainage Design Flow (cfs):	
@ WQF		To HS	
@ Design Q		Bypassing HS	

Sketch (NTS)

Comments:

Sheet 1 of 2

CONNECTICUT DEPARTMENT OF TRANSPORTATION HYDRODYNAMIC SEPARATOR DESIGN DATA SHEETS (FORM B - CONTRACTOR PROPOSAL)

Project No:		Location/Station:		Date:	

HYDRAULIC GRADE LINE ANALYSIS

Pipe	Downstream Str.	Pipe Size (in)	Flow (cfs)	Ground Elev. OUT (ft)	Invert Elev. OUT (ft)	HGL OUT (ft)	Depth OUT (ft)	Vel. Head OUT (ft)	EGL OUT (ft)	Length (ft)	Friction Slope (ft/ft)	Friction Loss (ft)	EGL IN (ft)	Vel. Head IN (ft)	HGL IN (ft)	Depth IN (ft)	Invert Elev. IN (ft)	Ground Elev. IN (ft)	Upstream Str.	Headloss Coeff.	Str. headloss (ft.)

3.2 EXAMINATION

A. The Contractor shall inspect the hydrodynamic separator and any accessory equipment upon delivery for general appearance, dimensions, soundness or damage in a manner acceptable to the Engineer. If any defects or damage are identified by the inspection, the unit shall be rejected by the Contractor and a new undamaged hydrodynamic separator shall be supplied. Any required adjustments of the separator shall be completed in accordance with Manufacturer's recommendations. A Manufacturer's representative and the Engineer will inspect the hydrodynamic separator before installation.

3.3 PREPARATION

A. Layout the location(s) indicated on the plans prior to construction.

B. When it becomes necessary to increase the horizontal dimension of the manholes and associative structures to a greater size than those shown on the plans in order to provide for multiple pipe installations or larger pipes for other reasons, the Contractor shall construct such manholes and associative structures to modified dimensions as directed by the Engineer.

3.4 CONSTRUCTION METHODS

A. The Contractor shall install the hydrodynamic separator structure in accordance with the Manufacturer's recommendations unless otherwise directed by this specification or by the Engineer. The hydrodynamic separator shall be installed plumb, level and aligned both vertically and horizontally with the inlet and outlet piping. The hydrodynamic separator shall be placed on a compacted granular fill base in accordance with the Manufacturer's specifications or a minimum thickness of 6" (150mm) whichever is larger. Anchoring systems shall be installed, where needed, to resist buoyancy forces. Care shall be taken not to damage the hydrodynamic separator during backfill and compaction.

B. Pipe openings in the hydrodynamic separator shall be sized to accept pipes of the specified size(s) and material(s) as shown on the contract drawings and shall be sealed by the Contractor in accordance with the requirements of this specification. The inlet and outlet pipe connections shall be watertight. The hydrodynamic separator shall be tested for leakage according to the Manufacturer's specifications and to the satisfaction of the Engineer. Any leaks must be found and corrected to the satisfaction of the Engineer prior to acceptance of the structure.

C. Access openings with manhole frames and covers shall be provided to all chambers of the hydrodynamic separator. The access openings and pipe openings shall be detailed on the working drawings to be submitted by the Contractor for review and acceptance by the Engineer.

D. All connecting structures and pipes included within the payment limits for this work shall be constructed in accordance with the applicable requirements of Sections 33 39 00 Storm Drainage Structures and Section 33 41 13 Public Storm Utility Drainage Piping.

3.5 CLEANING

A. The Contractor shall clean the hydrodynamic separator of all sediment and debris every 90 days, or as needed, from when they are put into service, until final acceptance of the project.

END OF SECTION 33 44 19.21

SECTION 33 49 00 – STORM DRAINAGE STRUCTURES

PART 1 – GENERAL

1.1 SECTION INCLUDES

A. Construction of Storm Drainage Structures and also the alteration, reconstruction or conversion of such existing structures of the type, size and configuration called for on the plans or as ordered and in conformity with these specifications which constitute a complete structure.

B. Storm Drainage Structures shall be precast and watertight and shall have pipe connectors. All joints shall have a watertight sealant. Manholes and catch basins shall be visually inspected for leakage. Storm Drainage Structures shall receive a factory-applied waterproofing coating as specified herein.

C. Storm water flows shall be handled during the installation of storm drainage structures. This work shall consist of designing, furnishing, installing, operating, maintaining, and removing measures to handle flows in the existing storm drainage system and includes handling flows from any source, including, but not limited to, storm drainage, tidal flows, and infiltration. The Trade Contractor shall also provide piping and incidental materials as required to handle storm flows during construction. The handling of water shall be in accordance with the requirements of this section and related project specifications.

1.2 SUBMITTALS

A. See Section 01 33 00 Submittal Procedures and Section 01 33 00.13 – Document Control for submittal requirements for this work.

B. The Trade Contractor shall submit a plan showing handling water measures capable of handling the 2-year storm for approval by the CTDOT PM.

1.3 RELATED REQUIREMENTS

A. Section 03 20 00 Concrete Reinforcing

B. Section 03 30 00 Cast-in-Place Concrete.

C. Section 04 05 11 Masonry Mortar ad Grouting.

D. Section 31 23 16 Excavation.

E. Section 31 23 23 Fill.

F. Section 31 35 19.17 Geotextile (Separation – High Survivability)

G. Section 33 41 13 Public Storm Utility Drainage Piping

PART 2 – PRODUCTS

2.1 MATERIALS

The materials for this work shall be those indicated on the plans or be ordered by the Engineer and conform to the following:

A. Brick for Storm Drainage Structures: Brick for Storm Drainage Structures shall conform to the requirements of ASTM C 32 except that the depth shall be 2 1/4 inches, the width 3 5/8 inches and the length 8 inches, and except that the maximum water absorption by 5-hour boiling shall not exceed the following limits:

Average of 5 bricks	15%
Individual brick	18%

B. Concrete Building Brick for Storm Drainage Structures: Concrete building brick for Storm Drainage Structures shall conform to the requirements of ASTM C 55, Grade S II.

C. Masonry Concrete Units for Storm Drainage Structures: Masonry concrete units for Storm Drainage Structures shall conform to the requirements of ASTM C 139.

D. Precast Units for Storm Drainage Structures: Precast units for Storm Drainage Structures shall be used except where particular conditions require building or casting in place and as approved by the Engineer.

Fabrication plants shall have a quality control plan approved by the Division Chief of Materials Testing that is demonstrated to the satisfaction of the Engineer. The facility, the quality of materials, the process of fabrication and the finished precast units shall be subject to inspection by the Engineer.

Circular precast catch basins and precast manholes shall conform to AASHTO M 199 (ASTM C 478) as supplemented below:

Rectangular precast catch basins shall conform to ASTM C 913 as supplemented below:

All materials used for concrete shall conform to the requirements of Section 03 30 Cast-in-Place Concrete.

The provisions of Section 03 30 00 Cast-in-Place Concrete shall apply except that the concrete shall contain 5.0% - 8.0% entrained air. Water-absorption of individual cores taken from precast units shall be not more than 7%.

Reinforcement shall conform to the requirements of Section 03 20 00 Concrete Reinforcing.

Suitable provision shall be made in casting the units for convenient handling of the completed casting, and additional reinforcement steel shall be provided to allow for such handling in the

casting yard and during transportation and placement. Each completed unit shall be identified with the name of manufacturer and date of the concrete pour from which it was cast, either by casting this information into an exposed face of the unit or by suitable stencil.

For each day's production of precast units, the fabricator shall mold, cure and test standard cylinders, or cylinders compacted in a similar manner to the parent precast units, for the purpose of determining the compressive strength of the concrete incorporated into the precast units. Concrete used in molding the cylinders shall be representative of the concrete incorporated into the precast units during the production period. Cylinders shall be molded in accordance with AASHTO T 23, cured by the same method as the units they represent, and tested as prescribed in AASHTO T 22

The fabricator shall determine the air content of the concrete used in the day's production of precast units by performing tests as prescribed in AASHTO T 152.

The equipment and personnel necessary to perform the required testing shall be furnished by the fabricator and approved by the Engineer. All testing equipment shall be calibrated at least once each 12 months or as directed by the Engineer. The fabricator shall maintain records relative to the production, testing and shipment of precast units supplied to the Department. Said records shall be available to a representative of the Department upon his request.

The Department may accept precast concrete units on the basis of fabricator's certification. The fabricator shall certify each shipment of precast concrete units on Department Form MAT 314 (PC-1), "Certification of Precast Concrete Products." Two (2) copies of this certification shall be furnished with the shipment to the Engineer at the Project site.

Precast units that are cracked, show evidence of honeycomb, or have over 10% of their surface area patched may be subject to rejection, even though meeting other requirements.

Ladder rungs for drainage structures shall conform to AASHTO M 199 (ASTM C478).

E. Metal for Drainage Structures: Metal for catch basins, catch basin grate frames, manholes, manhole covers, extensions, and gratings shall be cast iron, cast steel, structural steel or malleable iron conforming to the requirements of the plans. Covers and gratings shall bear uniformly on their supports.

Manhole frames and covers shall have the lettering "Storm Sewer" cast into it.

Bolted Manhole Covers shall include a gasketed heavy duty solid lid with stainless steel bolts and stainless steel washers or as ordered by the Engineer.

Extensions shall be designed so that the existing structure grate or cover, when set in place, will have substantially the same bearing, fit and load carrying capacity as in the existing frame. The extension shall be designed to fit into the original frame, resting specifically on the flange and rim area. The extension shall accept the grate or cover so that the grate or cover is seated firmly without movement.

Cast iron shall conform to the requirements of AASHTO M 105, Class 25 for the frames and Class 30 for grates.

Cast steel shall conform to the requirements of ASTM A 27, Grade optional, and shall be thoroughly annealed.

Structural Steel shall conform to the requirements of ASTM A 36, or A 283, Grade B or better, as to quality and details of fabrication, except that in the chemical composition of the steel, the 2/10 of 1% of copper may be omitted.

Malleable iron shall conform to the requirements of ASTM A 47, Grade 22010.

F. Protective compound material shall conform to Section 03 30 00 Cast-in-Place Concrete.

G. Galvanizing: The zinc coating on all iron and steel materials, other than wire, shall meet the requirements of ASTM A 123/A or ASTM A153/A, whichever shall apply.

H. Mortar shall conform to Section 04 05 11 Masonry Mortaring and Grouting.

J. Geotextile shall conform to Section 31 35 19.17 Geotextile (Separation – High Survivability).

K. Bedding Material: Material for pipe bedding shall be sand or sandy soil, all of which passes a 3/8-inch sieve, and not more than 10% passes a No. 200 sieve.

When ground water is encountered, the Engineer may allow No. 6 stone conforming to Section 31 23 23Fill to be used instead of sand or sandy soil.

L. Granular fill shall conform to the requirements of Section 31 23 23 Fill.

M. Compacted granular fill: shall conform to the requirements of Section 31 23 23 Fill.

N. Concrete for anti-flotation purposes shall be Class "A" as defined in Cast-in-Place concrete Section 03 30 00 Cast-in-Place Concrete.

O. Pipe Connectors with Flexible Annular Space Filler:

1. Conform to ASTM C923 and ASTM C 443 5.

2. Cast in place with stainless steel bands.

3. Band and clamp non-magnetic Series 304 stainless steel.

4. Nitrile O-ring gaskets and PVC cavity shall be hydrocarbon resistant and meets or exceeds which meet or exceed ASTM C 443 5.

5. Do not furnish connectors using castings and bolts with non-resilient bearings.

P. Waterproof Coating System: The outside surface of all Storm Drainage Structures shall be coated with a waterproof protective membrane. Membrane material shall be a single component rubber reinforced asphalt which forms a highly elastomeric waterproofing coating. Waterproofing coating shall be hydrocarbon resistant. Membrane shall be applied to precast concrete using a smooth edge trowel at the rate of 4 gallons per 100 square feet to achieve a dry

film thickness of 40 mils. Joints and cracks shall be filled and reinforced per manufacturer's recommendations. Typical properties of cured materials shall be as follows:

Property	Value
Tensile Strength per ASTM D412	400 psi
Elongation, per ASTM D412	700%
Hardness Shore A per ASTM D2240	55
Permeance	0.25 metric perms

Q. Joints: Joints between precast Storm Drainage Structures concrete sections shall have rubber gaskets in compliance with ASTM C 1619 or receive a 1/2-inch bead of single component petroleum resistant hydrophilic sealant. Physical properties in the hardened state shall be as follows:

Physical Properties	Test Method	Min. Value
Hardness (Shore)	ASTM D2240	20
Tensile Strength	ASTM D412	350 psi
% Elongation at Ultimate Failure	ASTM D412	700%
% Volume Exp.		180%
Specific Gravity		1.28 ±0.15
Polymerized		Yes

R. Handling Water: materials shall consist of items conforming to the pertinent articles of the project specifications and approved by the CTDOT PM, or other items approved by the CTDOT PM, such as sandbags, temporary bulkheads, temporary pipe plugs, bypass piping, temporary piping, bypass pumps and hoses, or other material approved by the CTDOT PM.

PART 3 EXECUTION

3.1 EXAMINATION

A. Verify that construction area for the Storm Drainage Structures indicated on the plans is ready for the Work as indicated.

3.2 PREPARATION

A. Layout the location indicated on the plans for the Storm Drainage Structures prior to construction.

B. When it becomes necessary to increase the horizontal dimensions of Storm Drainage Structures, to sizes greater than those shown on the plans in order to provide for multiple pipe installations or large pipes or for other reasons, the Trade Contractor shall construct such catch basins and drop inlets to modified dimensions as directed by the Engineer.

3.3 CONSTRUCTION

A. These structures shall be constructed in accordance with the requirements contained herein for the character of work involved. The provisions of Section 03 20 00 Concrete Reinforcing pertaining to bar reinforcement shall apply except that shop drawings need not be submitted for approval, unless called for on the plans or directed by the Engineer. Welding shall be performed in accordance with the applicable sections of the AWS Structural Welding Code, D1.1.

B. The surfaces of the tops of all Storm Drainage Structures shall be given a coat of protective compound material immediately upon completion of the concrete curing period at the rate of .04 gallons per square yard.

C. All masonry units shall be laid in full mortar beds.

D. Metal fittings for drainage structures shall be set in full mortar beds or otherwise secured as shown on the plans.

E. Inlet and outlet pipes shall extend through the walls for a sufficient distance beyond the outside surface to allow for satisfactory connections, and the concrete or masonry shall be constructed around them neatly to prevent leakage along their outer surfaces. The pipe shall be cut flush with the inside face of the wall, or as shown on the plans.

F. When constructing a new Storm Drainage Structures within a run of existing pipe, the section of existing pipe disturbed by the construction shall be replaced with new pipe of identical type and size extending from the drainage structure to the nearest joint of the existing pipe.

G. Frames, covers and tops which are to be reset shall be removed from their present beds, the walls or sides shall be rebuilt to conform to the requirements of the new construction and the tops, frames and covers reset, or the grates or covers may be raised by extensions of suitable height approved by the Engineer.

H. Extensions shall not be used on catch basins at pavement low points or where adjacent curbing is being raised. Extensions for catch basins or drop inlets shall be tack welded to the frame in four locations approximately at the mid points of each side of the frame. If the frames, covers or tops are broken or so damaged as to be unfit for further use, they shall be replaced with new, sound material conforming to the above requirements for the material involved.

I. Install Storm Drainage Structures on a 12 inch thick layer of No 6 Crushed Stone base.

J. Sealant and pipe connectors shall be installed per manufacturer's instructions to assure a watertight seal.

K. All exterior surfaces of the precast Storm Drainage Structures (excluding tops of catch basins) shall be given an application of waterproofing at the factory. Apply per manufacturer’s

recommendation. Additional waterproofing material shall be supplied to the site to be used as touch up as directed by the Engineer.

L. Place precast concrete sections in compliance with ASTM C891. Provide either ASTM C4435 rubber joints gaskets or hydrocarbon resistant hydrophilic sealant at joints between sections.

M. Storm Drainage Structures shall be visually inspected for leakage. All leaks shall be sealed by a means found to be acceptable by the Engineer.

N. Backfill around Storm Drainage Structures shall not be pervious structure material, but shall be suitable backfill, reusable controlled material or as called for on the plans or as directed by the Engineer.

O. In paved areas, all catch basin tops shall be set flush with the finished surface. In ballasted areas, all catch basin tops shall be set 3 inches above the finished surface.

P. A suggested method for handling water is described below. The Trade Contractor may propose a different approach, provided the approach complies with the requirements specified herein.

1. Flows in Storm Drain System: The Trade Contractor shall note that there may be tidal, groundwater, and storm drainage flows in the existing storm drainage system at the connection point to the existing system. The connection point for this project is an existing manhole that is being replaced at the southern project limits.

2. Tidal Flows: The existing drainage system being connected to may be subject to tidal flows. The Trade Contractor shall handle tidal flows while connecting to the existing storm drainage system. The Trade Contractor shall obtain tide charts to determine the times of high and low tides and estimated elevations of tides in New Haven Harbor. The Trade Contractor may adjust his work hours to take advantage of low tide conditions.

3. Bypass Pumping Operations: Whenever bypass pumping is utilized, the Trade Contractor shall provide labor to maintain and operate the pump on a 24-hour-a-day, 7-day-a-week basis. The Trade Contractor is responsible for obtaining and paying for power if electric pumps are used.

   Any pumped water must be discharged in a manner that does not create turbidity problems. If the CTDOT PM determines that a pumping operation is causing turbidity problems, the Trade Contractor shall halt said operation until a means of controlling the turbidity is submitted by the Trade Contractor in writing to the CTDOT PM, approved in writing by the CTDOT PM and implemented by the Trade Contractor.

4. Plan Revisions: Any revised version of the water-handling plan must be capable of accommodating a two-year storm. Any water-handling system that may be in place longer than 6 months must be designed in accordance with the Department's Drainage Manual.

END OF SECTION 33 49 00

SECTION 33 49 27 – STORM DRAINAGE TIDEGATE MANHOLE

PART 1 GENERAL

1.1 SECTION INCLUDES

A. Construction of storm drainage tidegate manholes of the type, size and configuration called for on the plans or as ordered and in conformity with these specifications which constitute a complete structure.

B. Storm drainage tidegate manholes shall be precast, watertight, and shall have pipe connectors. All joints shall have a petroleum resistant watertight sealant and the unit shall be visually inspected for leakage. The tidegate manhole shall be damp-proofed. The tidegate manhole shall have a complete in-place slip-on flat bottom check valve and necessary installation hardware where shown on the plans or as directed by the Engineer

1.2 FUNCTION

A. When line pressure inside the valve exceeds the backpressure outside the valve by a certain amount, the line pressure forces the bills of the valve open, allowing flow to pass. When backpressure exceeds the line pressure by the same amount, the bills of the valve are forced closed. The flat bottom allows the valve to be installed where minimal bottom clearance exists.

1.3 SUBMITTALS

A. See Section 01 33 00 Submittal Procedures and Section 01 33 00.13 – Document Control for submittal requirements for this work.

B. Submit product literature that includes information on the performance and operation of the valve, materials of construction, dimensions and weights, elastomer characteristics, flow data, headloss data, and pressure ratings.

C. Provide shop drawings that clearly identify the valve dimensions.

D. Provide shop drawings that indicate all details of the related installation hardware.

E. Submit manufacturer’s installation instructions.

F. Submit manufacturer’s recommended operations and maintenance manuals and instructions.

1.4 RELATED REQUIREMENTS

A. Section 31 23 16, for Excavation.

B. Section 04 05 11, for Mortar.

C. Section 31 35 19.17, for Geotextile.

D. Section 33 49 00, for Storm Drainage Structures

1.5 QUALITY ASSURANCE

A. Manufacturer shall have at least ten (10) years experience in the production of elastomeric "Duckbill" style elastomeric valves, and shall provide references and a list of installations upon request.

PART 2 PRODUCTS

2.1 MANUFACTURERS

A. All valves shall be of the Series TF-1 as manufactured by the Red Valve Co., Inc. of Carnegie, PA 15106 or approved equal.

2.2 MATERIALS

The materials for this work shall meet all the requirements of Section 33 49 00.

A. Brick for Storm Drainage Structures: except that the depth shall be 2 1/4 inches, the width 3 5/8 inches and the length 8 inches, and except that the maximum water absorption by 5-hour boiling shall not exceed the following limits:

Average of 5 bricks	15%
Individual brick	18%

B. Concrete Building Brick for Storm Drainage Manholes: Concrete building brick for storm drainage manholes shall conform to the requirements of ASTM C 55, Grade S II.

C. Masonry Concrete Units for Catch Basins: Masonry concrete units for catch basins shall conform to the requirements of ASTM C 139.

D. Precast Units for Storm Drainage Manholes: Precast units for storm drainage manholes shall be used except where particular conditions require building or casting in place and as here in.

E. Provide lifting hooks in top of top slab for future removal to replace tide valve.

F. Materials shall conform to the applicable requirements of Section 33 49 00 and the following:

G. Concrete shall conform to the requirements of Section 03 30 00.

H. Reinforcing steel shall conform to the requirements of Section 03 20 00.

I. Manhole Steps: Provide manhole steps of the type detailed on the plans.

J. Pipe Connectors with Flexible Annular Space Filler:

1. Conform to ASTM C923.

2. Cast in place with stainless steel bands.

3. Band and clamp non-magnetic Series 304 stainless steel.

4. Nitrile and PVC cavity O-ring.

5. Do not furnish connectors using castings and bolts with non-resilient bearings.

K. Non-shrink grout: Non-shrink, non-metallic grout: Provide non-metallic cement based grout requiring only the addition of water, with minimum 28-day compressive strength of 8,000 psi, with shrinkage compensation characteristics in both the plastic and hardened states, conforming with ASTM C1107, "Grade C."

L. Waterproof Coating System: The outside surface of the structure shall be coated with a waterproof protective membrane. Membrane material shall be a single component cold applied, coal tar free, liquid polyurethane membrane which shall form a seamless, impermeable, non-deteriorating rubber membrane. Membrane shall be applied to precast concrete using a smooth edge trowel at the rate of 4 gallons per 100 square feet to achieve a dry film thickness of 60 mils. Joints and cracks shall be filled and reinforced per manufacturer's recommendations. Typical properties of cured materials shall be as follows:

Property	Value
Tensile Strength per ASTM D412	170 psi
Die C Dumbbell	110-170 psi
Elongation, per ASTM D412	700%
Hardness Shore A per ASTM D412, Ply Up Method	35-45
Resilience (Recovery %) per ASTM D412,Die C Dumbbell	
At 100% elongation	100%
At 200% elongation	100%
Moisture Vapor Transmission gm/hr/ft2	.002-.012R.

M. Joints: Joints between precast storm drainage manhole concrete sections shall have rubber gaskets in compliance with ASTM C443 or receive a 1/2-inch bead of petroleum resistant single component hydrophilic sealant. Physical properties in the hardened state shall be as follows:

Physical Properties	Test Method	Min. Value
Hardness (Shore)	ASTM D2240	20
Tensile Strength	ASTM D412	350 psi
% Elongation at Ultimate Failure	ASTM D412	700%
Volume Exp. Coefficient		1.8
Tear Strength		176 psi
Polymerized		Yes
Tack Free		10 hours

N. Check Valves are to be all rubber of the flow operated check type with a slip-on connection. The Check Valve is designed to slip over the specified pipe outside diameter and attached by means of vendor furnished stainless steel clamps. The port area shall contour down to a duckbill, which shall allow passage of flow in one direction while preventing reverse flow. The valve shall be one piece rubber construction with nylon reinforcement. The duckbill shall be offset so that the bottom line of the valve is flat, keeping the invert of the pipe parallel with the invert of the valve. The top of the valve shall rise to form the duckbill shape. In sizes 20-inch and larger, the bill portion shall be thinner and more flexible than the valve body, and formed into a curve of 180°.

Manufacturer must have available flow test data from and accredited hydraulics laboratory to confirm pressure drop data. Company name, plant location, valve size and serial number shall be bonded to the check valve. Valves shall be manufactured in the United States of America.

PART 3 EXECUTION

3.1 EXAMINATION

A. Verify that construction area for the catch basins indicated on the plans is ready for the Work as indicated.

3.2 PREPARATION

A. Layout the location indicated on the plans for the storm drainage tidegate manholes prior to construction.

B. When it becomes necessary to increase the horizontal dimensions of storm drainage tidegate manholes to sizes greater than those shown on the plans in order to provide for multiple pipe installations or large pipes or for other reasons, the Trade Contractor shall construct such storm drainage tidegate manholes to modified dimensions as directed by the Engineer.

3.3 CONSTRUCTION METHODS

A. The construction methods for this work shall meet all the requirements of Section 33 49 00 Storm Drainage Structures, except as modified here in.

B. Valve shall be installed in accordance with the manufacturer's written Installation and Operation Manual and approved submittals.

C. Manufacturer's Customer Service: Manufacturer's authorized representative shall be available for customer service during installation and start-up, and to train personnel in the operation, maintenance and troubleshooting of the valve.

Manufacturer shall also make customer service available directly from the factory in addition to authorized representatives for assistance during installation and start-up, and to train personnel in the operation, maintenance and troubleshooting of the valve.

END OF SECTION 33 49 27

SECTION 34 11 26.13 – TRACK RAIL BALLAST

PART 1 GENERAL

1.1 SECTION INCLUDES

A. This item includes furnishing and installing ballast for track construction and for surface finishes in areas indicated on the plans. This item also includes furnishing and installing miscellaneous ballast as shown on the plans and as directed by the Engineer

1.2 REFERENCES

Comply with the latest provisions of Codes, Specifications, Standards, and recommended practices of the most recent edition and addenda thereto of:

AREMA: American Railway Engineering and Maintenance of Way Association,

Manual for Railway Engineering, Chapter 1, Part 2.

ASTM International (formerly American Society for Testing and Materials)

A.	ASTM C29 Aggregate.	Standard Test Method for Bulk Density ("Unit Weight") and Voids in
B.	ASTM C88 Sulfate.	Soundness of Aggregates by Use of Sodium Sulfate or Magnesium
C.	ASTM C117	Material finer than No. 200 Sieve in Mineral Aggregates by Washing.
D.	ASTM C127	Specific Gravity and Absorption of Coarse Aggregate.
E.	ASTM C131	Resistance to Abrasion of Small Size Coarse Aggregate by Use of the Los Angeles Machine.
F.	ASTM C136	Sieve or Screen Analysis of Fine and Coarse Aggregates.
G.	ASTM C142	Clay Lumps and Friable Particles in Aggregates.
H.	ASTM C535	Test Method for Resistance to Degradation of Large-Size Coarse Aggregate by Abrasion and Impact in the Los Angeles Machine.
I.	ASTM C702	Standard Practice for Reducing Samples of Aggregate to Testing Size
J.	ASTM D75	Standard Methods of Sampling Aggregates.
K.	ASTM D1556-00	Standard Test Method for Density and Unit Weight of Soil in Place by the Sand-Cone Method.

L. ASTM D 1557 Laboratory Compaction Characteristics of Soil Using Modified Effort (56,000 ft-lbf/ft^3).

M. ASTM D2922 Density of Soil and Soil-Aggregate in Place by Nuclear Methods (Shallow Depth)

N. ASTM D4318 Determining the Liquid Limit, Plastic Limit and Plasticity Index of Soils.

O. ASTM D4791 Standard Test Method for Flat Particles, Elongated Particles, or Flat and Elongated Particles in Coarse Aggregate.

P. ASTM E11 Standard Specification for Wire Cloth and Sieves for Testing Purposes.

California Department of Transportation

California Test Method 217 - *Method of Test for Sand Equivalent* [Available at CalDOT website: http://www.dot.ca.gov/hq/esc/ctms/pdf/CT_217Nov99.pdf].

MNR: Metro-North Railroad

Publication MW-4 - Manual for Construction & Maintenance of Track.

1.3 SUBMITTALS

A. See Section 01 33 00 Submittal Procedures and Section 01 33 00.13 – Document Control for submittal requirements for this work.

B. Samples: Submit as one representative sample and one sample of each new source of supply as requested by Engineer. Samples of not less then 150 lbs should be submitted. Field samples shall be secured in accordance with ASTM D75.

C. Test reports for testing specified herein.

1.4 QUALITY ASSURANCE

A. Compliance: Supplier's certification that the material delivered to the site is in compliance with the Specifications.

1.5 RELATED REQUIREMENTS

A. Section 31 23 16, for excavation.

B. Section 31 23 23 for filling

PART 2 PRODUCTS

2.1 MATERIALS

A. The materials for this work shall conform to the following requirements:

Testing and inspection shall conform to the provisions as delineated in the AREMA Manual. Submit a quality control plan that addresses all requirements of this specification, including requirements and testing called out in referenced documents.

Submit qualifications of testing laboratory to perform required testing. Provide certified results of tests required by specifications. The Engineer reserves the right to witness the performance of tests.

Material not meeting the Specifications shall not be used in the work.

Furnish prepared ballast that is of crushed rock, hard, strong, angular, durable particles, containing no carbonates or slag, free from injurious amounts of deleterious substances.

Ballast shall have a minimum sand equivalent of 50 when measured by California Test 217.

Determination of weight per cubic yard shall be in accordance with ASTM C29.

All particles of the ballast shall have been broken by the crusher and have at least two broken surfaces.

All boulders which will pass through a 5-inch circular opening before crushing shall be rejected.

Type A ballast shall be crushed trap rock or granite. It shall: a) be composed of angular fragments which are clear and free from deleterious substance; b) have proper gradation; and c) meet all requirements of this specification. Additionally, ballast shall be in conformance with AREMA Chapter 1, Part 2 except as otherwise specified herein.

Ballast shall conform to the following scale when tested with laboratory sieves having square openings. (Sieves must conform to ASTM E11):

Size No.	Ballast Type	Nominal Size Sq. Openings	Amounts Finer Than Each Sieve (Sq. Opening Laboratory Sieve- Pct. by Wgt) 2”	1½”	1”	3/4”	½”	3/8”	No.4
4	A	1½” - 3/4”	100	90-100	20-55	0-15		0-5	
5	A	1” - 3/8”	100	90-100	40-75	15-35	0-15	0-5	

Deleterious substances in ballast shall not be present in excess of the following amounts:

Description:	Percent by Weight:	Method of Test
Material finer than No. 200 Sieve	0.5 percent	ASTM C117
Clay lumps	0.5 percent	ASTM C142
Soft and friable pieces	3.0 percent	ASTM C142

Hardness shall be between 5.5 and 7.0 as measured on Moh Hardness scale.

Water absorption shall not exceed 1.2% when tested in accordance with ASTM C127.

Resistance to degradation shall be determined in accordance with ASTM C131 or ASTM C535. Materials having gradations containing particles retained on the 1 inch sieve shall be tested by ASTM C535. Materials having gradations with 100 percent passing the 1 inch sieve shall be tested by ASTM C131.

The Sieve Analysis shall be made in accordance with the ASTM C136.

Soundness shall be tested in accordance with ASTM C88. Average weighted loss shall not exceed 1.5 percent.

The percent of flat or elongated particles shall be determined in accordance with ASTM D4791. The dimension ratio shall be 1:3. Maximum allowable is 5 percent.

Be responsible for assuring ballast cleanliness. A suitable washing facility shall be provided at the quarry for this purpose. This facility shall consist of a high pressure spray over the ballast as it passes on the belt or other measures acceptable to the Engineer. Include washing procedures in the project quality control plan.

Prepared ballast shall be handled in such a manner that it is kept clean and free from segregation. It shall be only loaded into cars or trucks which are in good order, tight enough to prevent leakage and waste of material, and clean and free from rubbish or any substance which would foul the ballast.

The quality of stone for ballast from any quarry or new strata opened up, including its soundness, resistance to abrasion, chemical composition, absorption, impedance, hardness and weight per cubic foot, shall be determined prior to its acceptance at a testing laboratory selected by the purchaser. Each stratum or portion of quarry containing a variation of quality of stone shall be tested separately and not averaged. Quality tests and gradation tests shall subsequently be made from time to time as deemed necessary by the purchaser to control the quality and size of ballast furnished by the producer.

Sufficient visual observations, determinations of deleterious substances and analyses of gradation shall be made by the producer prior to shipment to assure compliance with these specifications.

Certify that ballast delivered to the Railroad is typical of that upon which specified tests have been made.

The selection of samples is as important as the laboratory testing; care shall be taken that the samples obtained show the true nature and conditions of the material to be examined.

Samples of all ballast and samples of stone at quarries for test to determine the acceptability of the source, as well as samples for quality control, shall be in accordance with ASTM D75 and C702. Method of sampling shall be submitted. Sampling may be performed by the Engineer at his discretion. The quarry or producer may select samples for inspection or preliminary testing if such action is approved by the Engineer.

Samples of the finished product for gradation and other required tests shall be taken from each 1,000 tons of prepared ballast unless otherwise ordered by the Engineer. Samples shall be representative and shall weigh not less than 100 pounds. Where the acceptability of stone from a quarry is to be determined, a 150 pound sample consisting of pieces of approximately 6 by 6 by 4 inches should also be furnished.

No ballast shall be unloaded unless it has been accepted by the Engineer.

If material prior to, during or after being loaded, does not conform to specifications, stop operations until all faults have been corrected. Should ballast that does not meet specifications be unloaded, then payment will not be made to Trade Contractor. Disposal and/or removal of defective material shall be done without any additional cost to the Department.

As it is impractical to inspect all ballast at quarry, the Engineer reserves the right to reject any car or truck load of ballast (whether previously inspected or not) that does not conform to specifications upon arrival at unloading site.

Handle prepared ballast at the production plant, during shipment, and at the work site so that it is kept clean and free of segregation.

PART 3 EXECUTION

3.1 EXAMINATION

A. Verify that construction area for ballast are to the lines and grades indicated on the plans and ready for the Work as indicated.

3.2 PREPARATION

A. Layout the location indicated on the plans for ballast placement prior to construction.

3.3 CONSTRUCTION

A. Do not place ballast until the Engineer has approved the subgrade upon which the ballast is to be placed.

B. Place stone ballast to the limits and depths, and to the grade, shown on the plans, or as directed by the Engineer.

C. The ballast layer shall be thoroughly compacted until the surface is true and unyielding, displaying no deformation or movement under the compaction equipment. Compact ballast to 100-percent maximum density by vibratory compaction equipment specifically manufactured for compaction purposes, or self-propelled pneumatic-tired roller. Self-propelled, pneumatic-tired roller shall have a gross weight of 10- to 15-tons. Vibratory compactor shall have a weight of not less than 10-tons and be capable of applying a dynamic load of not less than 18,000-pounds at 1,300- to 1,500-cpm.

D. Tolerances: Leave top of ballast bed flat and level to within plus or minus 1-inch of the prescribed finished elevation across a 12-foot wide platform centered on the track centerline.

E. After installation of ballast layer, refrain from driving vehicles on the ballast layer that would foul or rut the ballast thereby potentially causing center-binding of ties. Replace any ballast that has become fouled by mud or fine materials at no cost to the Owner.

F. Determination of Thickness: The thickness shall be as indicated on the plans, or as ordered by the Engineer and within specified tolerances.

G. Measurements to determine the thickness will be taken by the Engineer at intervals of 500 feet or less, and shall be considered representative of the lane.

H. If a thickness measurement is taken and found deficient, the Engineer will take such additional measurements as he considers necessary to determine the longitudinal limits of the deficiency.

I. The Engineer may waive an occasional measurement outside the tolerances if in his judgment it is not representative of true conditions and providing that:

1. Other thickness measurements taken nearby for the course are within acceptable limits;
2. Proper controls have been exercised by the Trade Contractor; and if there would be no impairment to the serviceability of the complete construction.

END OF SECTION 34 11 26.13

SECTION 41 22 00 - CRANES AND HOISTS

PART 1 - GENERAL

The General Provisions of the Trade Contract, including General and Special Conditions and the requirements of Division 1, apply to the Work in this Section.

1.1 WORK INCLUDED

A. Equipment items as listed below by Equipment Mark Number:

1. HOIST, CHAIN, ELECTRIC, 1 TON
Equipment Mark Number: 5362

B. Roughing-in and installation of equipment with labor, services, and incidentals necessary for complete and operational equipment installation.

C. Wiring and switching between equipment and utilities.

1.2 ALTERNATIVE BIDS

A. Refer to Division 1 - General Requirements for possible effect on Work of this Section.

1.3 QUALITY ASSURANCE

A. Experience: Equipment shall be produced by a manufacturer of established reputation with a minimum of five years experience supplying specified equipment.

B. Each crane system identified within shall be engineered as a single system by an identifiable prime manufacturer meeting all the requirements of section 1.03. An assemblage of individual components from various manufacturers without the engineering oversight and approval from an identifiable prime manufacturer will not be accepted.

C. All cranes to be installed per the most current CMAA / ANSI standards issued by the respective organizations at the time of installation.

D. Manufacturer's Representative:

1. Installation: Provide a qualified manufacturer's representative at site to supervise work related to equipment installation, check-out, and start-up.

2. Training: Provide technical representative to train Owner's maintenance personnel in operation and maintenance of specified equipment.

1.4 STANDARD AND REGULATORY REQUIREMENTS

A. Equipment indicated within this specification section shall comply with all applicable national, state and local codes and regulations, including seismic, fire, and racking codes

and regulations. Additional, more specific compliance requirements may be listed under individual equipment headings.

1.5 SUBMITTALS

A. Refer to Section 11 06 00 Equipment Schedule for submittal requirements listed in the "Submittals" column of the equipment list. In the event of conflict between Section 11 06 00 Equipment Schedule and the following expanded submittal descriptions, Section 11 06 00 Equipment Schedule is to govern.

B. Product Data:

1. Submit Product Data in accordance with Division 1 - General Requirements of these specifications.

2. All Product Data submittals shall identify proposed project specific items marked by arrow, circle, underline, reproducible highlight, or other markings clearly discernable by the reviewer, to show which specific items, parts and accessories are being submitted for the project product data review. Non-marked or generic product data submittals with no marks indicating specific items, parts and accessories will be a cause for rejection.

3. Restrict submitted material to pertinent data. For instance, do not include manufacturer's complete catalog when pertinent information is contained on a single page.

C. Operation and Maintenance Manual:

1. Provide a Complete parts list, operating instructions, and maintenance manual covering equipment at time of installation including, but not limited to:

a. Description of system and components.

b. Schematic diagrams of electrical and compressed air systems.

c. Manufacturer's printed operating and maintenance instructions.

d. List of original manufacturer's parts, including suppliers' part numbers and cuts, recommended spare parts stockage quantity and local parts and service source.

2. Assemble and provide copies of manual in 8-1/2 by 11 inch format. Foldout diagrams and illustrations are acceptable. Manual to be reproducible by dry copy method. Provide copies per provisions of Division 1 - General Requirements.

D. Shop Drawings: Submit in accordance with Division 1 -General Requirements of these specifications. Refer to Section 11 06 00 Equipment Schedule for the equipment mark numbers requiring shop drawings.

1. Submitted shop drawings shall be project specific and shall include a minimum 1/8 inch to 1 foot scaled (or larger standard architectural imperial scale), dimensioned,

graphical representation of the size, orientation, and location for the submitted equipment. The drawings shall further include dimensions from structural elements or architectural grid lines, operational clearances, locations of any utility service connection points, mounting requirements, and structural supports required for the submitted equipment.

1.6 PRODUCT SUBSTITUTIONS

A. Follow requirements specified in Division 1 - General Requirements.

B. Additional costs resulting from substitution of products other than those specified, including drawing changes and construction, will be at the expense of the Trade Contractor.

C. Substitution Approval: Manufacturers listed for each equipment item may bid without submittal for that item. Manufacturers not listed shall submit for approval in accordance with "Instructions to Bidders". Prior to procurement, submittals for each equipment item by Mark Number shall be provided in accordance with Division 1 - General Requirements.

1.7 WARRANTY

A. Warrant work specified herein for eighteen months from substantial completion against defects in materials, function and workmanship.

B. Warranty shall include materials and labor necessary to correct defects.

C. Defects shall include, but not be limited to noisy, rough or substandard operation; loose, damaged, and missing parts; and abnormal deterioration of finish.

D. Submit warranties in accordance with Division 1 - General Requirements of these specifications.

E. All parts shall be readily available locally in the United States.

1.8 PRODUCT DELIVERY, STORAGE, AND HANDLING

A. Deliver equipment in manufacturer's containers, appropriately packaged and/or crated for protection during shipment and storage in humid, dusty conditions.

B. Indelibly label all containers, including those contained in others, on outside with item description(s) per title and Mark Number of this specification.

C. Provide equipment and materials specified complete in one shipment for each equipment item. Split or partial shipments are not permissible.

1.9 LABELING

A. Nameplate: Manufacturer shall securely attach in a prominent location on each major item of equipment a non-corrosive nameplate showing manufacturer's name, address, model number, serial number, and pertinent utility or operating data.

B. Crane capacity shall be painted with letters and numbers 3 inches high minimum on both sides of the main structural assembly.

C. All electrical equipment and materials shall be new and shall be listed by Underwriter's Laboratories, Inc. (U.L.), or other National Recognized Testing Laboratory (NRTL), in categories for which standards have been set by that agency and labeled as such in the manufacturer's plant.

PART 2 – PRODUCTS

2.1 HOIST, CHAIN, ELECTRIC, 1 TON
Equipment Mark Number: 5362

A. Capacities and Dimensions:

1. Hoist:

a. Capacity: 2000 pounds.

b. Lifting range: 20 feet.

c. Lifting speed: 8 FPM.

d. Motor: 1/2 HP.

2. Trolley:

a. Capacity: 2000 pounds.

b. Travel speed: 35 FPM.

c. Motor: 1/4 HP.

d. I-Beam size range: 6 to 18 inches, American Standard Section.

3. Headroom, with trolley: 20 inches, maximum.

4. Weight: 196 pounds, nominal.

B. Features and Construction:

1. Drive: Needle and ball type bearings with gears running in oil bath.

2. Frame and wheels: Cast aluminum alloy with steel wheels.

3. Load hook and chain: Forged steel hook with safety clip attached to heat treated chain by bearing type swivels.

4. Safety features: Ratchet pawl mechanical load brake, factory preset load limit slip clutch to prevent overloading and motor overheating, and adjustable upper and lower limit switches.

5. Hoist mounting: Lug mounted to trolley for minimum headroom.

6. Pendant height: Control pendant shall be mounted 36 inches above finished floor.

C. Controls: Four pushbutton pendant, 24 volt, with cord strain relief bushings for hoist UP/DOWN and trolley FORWARD/REVERSE.

D. Accessories:

1. Hoist mounted chain container kit, one each.

E. Utilities Available: 460 VAC, 3 phase, 3/4 HP.

F. Manufacturers Reference:

1. Prime manufacturer: Specifications are based on equipment identified herein by manufacturer's name and model to establish acceptable standards of quality, performance, features, and construction.

a. Columbus McKinnon - Coffing Hoists
140 John James Audubon Parkway
Amherst, NY 14228-1197
Phone: (716) 689-5400
Website: www.cmworks.com/coffing-hoists

b. Model: ECMT-2008-3-15 with motorized trolley and Accessories

2. Other manufacturers: Contingent upon compliance with these specifications and documentation requirements set forth in SUBMITTALS, equipment produced by other manufacturers, including the following, may be considered as equal.

a. R&M Materials Handling
4501 Gateway Boulevard
Springfield, OH 45502
Phone: (937) 328-5100, (800) 955-9967
Fax: (937) 325-5319
Website: www.rmhoist.com

b. Detroit Hoist & Crane Co.
6650 Sterling Dr. N
Sterling Hts, MI
Phone: (586) 268-2600, (800) 521-9126
Fax: (586) 268-0044
Website: www.detroithoist.com

PART 3 - EXECUTION

3.1 INSPECTION

A. Coordinate location of rough-in work and utility stub-outs to assure match with equipment to be installed.

B. Inspect delivered equipment for damage from shipping and exposure to weather. Compare delivered equipment with packing lists and specifications to assure receipt of all items.

3.2 INSTALLATION

A. Perform work under direct supervision of Foreman or Construction Superintendent with authority to coordinate installation of scheduled equipment with CTDOT PM.

B. Install equipment in accordance with plans, shop drawings and manufacturer's instructions:

1. Positioning: Place equipment in accordance with any noted special positioning requirements generally level, plumb and at right angles to adjacent work.

2. Fitting: Where field cutting or trimming is necessary, perform in a neat, accurate, professional manner without damaging equipment or adjacent work.

3. Anchorage: Attach equipment, as directed by CTDOT PM, to prevent damage resulting from inadequate fastening. Installation fasteners shall be installed to avoid scratching or damaging adjacent surfaces.

4. Upon completion of work, finish surfaces shall be free of tool marks, scratches, blemishes, and stains.

3.3 TESTING

A. After final connections are made and prior to authorizing payment, specified equipment shall be tested for compliance with specification in the presence of the CTDOT PM using acceptance procedures provided by the manufacturer.

B. Final testing and post installation inspection are required, and shall be performed by the manufacturer or the manufacturer’s designated representative only. Final testing and inspection shall not be performed by the installer, unless the installer is also the manufacturer.

3.4 CLEANUP

A. Touch-up damage to painted finishes.

B. Wipe and clean equipment of any oil, grease, and solvents, and make ready for use.

C. Clean area around equipment installation and remove packing or installation debris from job site.

D. Notify CTDOT PM for acceptance inspection.

3.5 TRAINING

A. Direct the technical representative to provide specified hours of training to designated Owner's maintenance personnel in operation and maintenance of the following equipment. Coordinate, with Owner, training schedule and list of personnel to be trained.

1. HOIST, CHAIN, ELECTRIC, 1 TON
   Equipment Mark Number: 5362
   Hours Required: 1

B. Obtain, from technical representative, a list of Owner's personnel trained in equipment operations and maintenance.

C. Provide a Windows compatible movie file format recording on DVD disk of the training session. The DVD training movie can be of a live session or a produced training video.

END OF SECTION 41 22 00

SECTION 41 63 00 - GENERAL VEHICLES

PART 1 - GENERAL

The General Provisions of the Trade Contract, including General and Special Conditions and the requirements of Division 1, apply to the Work in this Section.

1.1 WORK INCLUDED

A. Equipment items as listed below by Equipment Mark Number:

1. FORKLIFT, ELECTRIC, SIT-DOWN, 4,000 POUND
Equipment Mark Number: 5350

B. Roughing-in, installation of equipment, and final connection of utilities, with labor, services, and incidentals necessary for complete and operational equipment installation.

C. Piping, wiring, and switching between equipment and utilities.

1.2 ALTERNATIVE BIDS

A. Refer to Division 1 - General Requirements for possible effect on Work of this Section.

1.3 QUALITY ASSURANCE

A. Experience: Equipment shall be produced by a manufacturer of established reputation with a minimum of five years experience supplying specified equipment.

B. Manufacturer's Representative:

1. Installation: Provide a qualified manufacturer's representative at site to supervise work related to equipment installation, check out and start up.

2. Training: Provide technical representative to train Owner's maintenance personnel in operation and maintenance of specified equipment.

1.4 STANDARD AND REGULATORY REQUIREMENTS

A. Equipment indicated within this specification section shall comply with all applicable national, state and local codes and regulations, including seismic, fire, and racking codes and regulations. Additional, more specific compliance requirements may be listed under individual equipment headings.

1.5 SUBMITTALS

A. Refer to Section 11 06 00 Equipment Schedule for submittal requirements listed in the "Submittals" column of the equipment list. In the event of conflict between Section 11 06 00 Equipment Schedule and the following expanded submittal descriptions, Section 11 06 00 Equipment Schedule is to govern.

B. Product Data:

1. Submit Product Data in accordance with Division 1 - General Requirements of these specifications.

2. All Product Data submittals shall identify proposed project specific items marked by arrow, circle, underline, reproducible highlight, or other markings clearly discernable by the reviewer, to show which specific items, parts and accessories are being submitted for the project product data review. Non-marked or generic product data submittals with no marks indicating specific items, parts and accessories will be a cause for rejection.

3. Restrict submitted material to pertinent data. For instance, do not include manufacturer's complete catalog when pertinent information is contained on a single page.

C. Operation and Maintenance Manual:

1. Provide a Complete parts list, operating instructions, and maintenance manual covering equipment at time of installation including, but not limited to:

a. Description of system and components.

b. Schematic diagrams of electrical, plumbing and compressed air systems.

c. Manufacturer's printed operating instructions.

d. Printed listing of periodic preventive maintenance items and recommended frequency required to validate warranties. Failure to provide maintenance information will indicate that preventive maintenance is not a condition for validation of warranties.

e. List of original manufacturer's parts, including suppliers' part numbers and cuts, recommended spare parts stockage quantity and local parts and service source.

2. Assemble and provide copies of manual in 8-1/2 by 11 inch format. Foldout diagrams and illustrations are acceptable. Manual to be reproducible by dry copy method. Provide copies per provisions of Division 1 - General Requirements.

D. Submit Shop Drawings in accordance with Division 1 -General Requirements of these specifications. Refer to Section 11 06 00 Equipment Schedule for the equipment mark numbers requiring shop drawings.

1. Submitted shop drawings shall be project specific and shall include a minimum 1/8 inch to 1 foot scaled (or larger standard architectural imperial scale), dimensioned, graphical representation of the size, orientation, and location for the submitted equipment. The drawings shall further include dimensions from structural elements or architectural grid lines, operational clearances, locations of any utility service connection points, mounting requirements, and structural supports required for the submitted equipment.

1.6 PRODUCT SUBSTITUTIONS

A. Follow requirements specified in Division 1 - General Requirements.

B. Additional costs resulting from substitution of products other than those specified, including drawing changes and construction, will be at the expense of the Trade Contractor.

C. Substitution Approval: Manufacturers listed for each equipment item may bid without submittal for that item. Manufacturers not listed shall submit for approval in accordance with "Instructions to Bidders". Prior to procurement, submittals for each equipment item by Mark Number shall be provided in accordance with Division 1 - General Requirements.

1.7 WARRANTY

A. Warrant work specified herein for eighteen monthsr from substantial completion against defects in materials, function and workmanship.

B. Warranty shall include materials and labor necessary to correct defects.

C. Defects shall include, but not be limited to noisy, rough, or substandard operation; loose, damaged, and missing parts; and abnormal deterioration of finish.

D. Submit warranties in accordance with Division 1 - General Requirements of these specifications.

E. All parts shall be readily available locally in the United States.

1.8 PRODUCT DELIVERY, STORAGE, AND HANDLING

A. Deliver equipment in manufacturer's containers, appropriately packaged and/or crated for protection during shipment and storage in humid, dusty conditions.

B. Indelibly label all containers, including those contained in others, on outside with item description(s) per title and Mark Number of this specification.

C. Provide equipment and materials specified complete in one shipment for each equipment item. Split or partial shipments are not permissible.

1.9 LABELING

A. Manufacturer shall securely attach in a prominent location on each major item of equipment a non-corrosive nameplate showing manufacturer's name, address, model number, serial number, and pertinent utility or operating data.

B. All electrical equipment and materials shall be new and shall be listed by Underwriter's Laboratories, Inc. (U.L.), or other National Recognized Testing Laboratory (NRTL), in categories for which standards have been set by that agency and labeled as such in the manufacturer's plant.

PART 2 – PRODUCTS

2.1 FORKLIFT, ELECTRIC, SIT-DOWN, 4,000 POUND
Equipment Mark Number: 5350

A. General:

1. Description: A battery powered forklift truck intended to operate with an on-board operator in a sitting position, and shall include overhead protection for the operator, batteries, and a battery charger.

2. Compliance: The forklift truck shall be designed to be in compliance with current editions of all applicable local, state, and federal codes and regulations, including OSHA regulation 1910.178 for Powered Industrial Trucks. The forklift truck shall be fitted with an easily identifiable label indicating compliance with aforementioned regulation, as determined by a Nationally Recognized Testing Laboratory (NRTL). The forklift truck shall have the following usage designation:

a. Type E: For use in non-hazardous storage warehouse and outside storage locations, per OSHA 1910.178 (c)(2)(xi).

All electrical portions of the forklift truck, including battery and battery charger shall be compliant with NFPA 70: National Electric Code (NEC).

B. Capacities and Dimensions:

1. Capacity, 24 inch load center: 4000 pounds.

2. Type: 36-volt electric, sit-down rider, cushioned tire.

3. Lift height: 188 inches.

4. Free lift: 32 inches.

5. Forks:

a. Thickness: 1.75 inches.

b. Width: 4 inches.

c. Length: 42 inches.

6. Tilt of mast:

a. Forward: 5 degrees.

b. Backward: 5 degrees.

7. Head length: 78 inches.

8. Turning radius: 69 inches.

9. Load distance: 16 inches.

10. Speeds, loaded:

    a. Travel: 8 mph.

    b. Lifting: 58 fpm.

    c. Lowering: 84 fpm.

11. Grade clearance, loaded: 38 percent.

12. Wheelbase: 50 inches.

13. Ground clearance, loaded at center of wheelbase: 4.8 inches.

14. Tire size:

    a. Front: 21 x 7 x 15 inches, two each.

    b. Rear: 16 x 6 x 10.5 inches, two each.

15. Overall dimensions:

    a. Width: 44 inches.

    b. Length: 126 inches.

    c. Height, including backrest:

    1) Collapsed mast: 86 inches.

    2) Extended mast: 236 inches.

16. Weight, nominal: 10,000 pounds.

C. Features and Construction:

1. Drive system: The AC drive motor shall be submerged in an oil bath and be heavy duty triple reduction all gear design and transverse mounted.

2. Brakes: Service brakes shall be located in the wheel ends with a full circle power disc design and hydraulic power used to actuate a full circle rotor and friction pads. The parking brake shall be located on the end of the motor shaft and activated by a push button located on the cowl.

3. Steering: Steering shall be a fully hydrostatic system with equal area, double acting cylinder with 4.8 turns lock to lock. The axle frame shall articulate in rubber isolation bushing and be one-piece forged spindle and kingpin in sealed, tapered roller bearings and spherical bearings with tapered pins in connecting links with lubrication fittings.

4. Mast assembly: The mast shall be secured by a mast trunnion mounted on the drive axle with extra heavy tilt cylinders with self-aligning bushings. The mast shall be of nested-rail design type with lift cylinders positioned behind the rails and the hydraulic hose routing shall be designed in-line.

5. Hydraulics: A hydraulic function control valve shall provide metering of lift and tilt and a compensating section in the valve shall provide repeatable function speed. Fork lift and tilt shall be regulated with an interlocking system. Control valves shall be of modular design limiting maximum lowering speed by pressure compensating flow control valve and velocity fuses. Lift cylinders shall be plated and retract into the hydraulic oil when the forks are lowered. The steel oil reservoir shall be integrated to the frame to dissipate hydraulic oil heat and returned through a spin-on type oil filter.

6. Operating compartment: Compartment shall include a rubber covered floorboard to insulate the operator from vibration, a compact spring-loaded tilt steer column and steer wheel, urethane covered control handles with tactile feedback, a finger applied/release parking brake with tone alert, and a large convex horn button housed in the center of the wheel. The compartment shall be covered by an overhead guard

7. Tires: Pneumatic tires shall be suitable for outdoor operation.

D. Accessories:

1. Full battery pack: Deka Model 18-85P-23, 36 volts, 935 amp hour capacity, one each.

2. Battery charger: Ametek Model 880H3-18, 480 VAC, 3-phase, floor-mounted, one each.

3. Other: Side-shifter cascade, travel alarm reverse, and rear view mirror, one each.

E. Utilities Available:

1. Electrical: 480 VAC, 1 Phase, 10 Amps.

F. Manufacturers Reference:

1. Prime manufacturer: Specifications are based on equipment identified herein by manufacturer's name and model to establish acceptable standards of quality, performance, features, and construction.

a. Crown Equipment Corporation
44 South Washington Street
New Bremen, Ohio 45869
Phone: (419) 629-2311
Fax: (419) 629-2900
Website: www.crown.com

b. Model: FC 4510-40 with accessories

2. Other manufacturers: Contingent upon compliance with these specifications and documentation requirements set forth in SUBMITTALS, equipment produced by other manufacturers, including the following, may be considered as equal.

a. Yale Materials Handling Corporation
1400 Sullivan Drive
Greenville, NC 27835
Phone: (252) 931-5535, (800) 233-9253
Fax: (252) 931-5146
Website: www.yale.com

b. Toyota Material Handling
One Park Plaza
Irvine, CA 92623
Phone: (714) 632-3730, (800) 226-0009
Fax: (714) 632-1678
Website: www.toyotaforklift.com

PART 3 - EXECUTION

3.1 INSPECTION

A. Coordinate location of rough-in work and utility stub-outs to assure match with equipment to be installed.

B. Inspect delivered equipment for damage from shipping and exposure to weather.

C. Compare delivered equipment with packing lists and specifications to assure receipt of all items.

3.2 INSTALLATION

A. Perform work under direct supervision of Foreman or Construction Superintendent with authority to coordinate installation of scheduled equipment with CTDOT PM.

B. Install equipment in accordance with plans, shop drawings and manufacturer's instructions:

1. Positioning: Place equipment in accordance with any noted special positioning requirements generally level, plumb and at right angles to adjacent work.

2. Fitting: Where field cutting or trimming is necessary, perform in a neat, accurate, professional manner without damaging equipment or adjacent work.

3. Anchorage: Attach equipment securely to floor, as directed by CTDOT PM, to prevent damage resulting from inadequate fastening. Installation fasteners shall be installed to avoid scratching or damaging adjacent surfaces.

4. Upon completion of work, finish surfaces shall be free of tool marks, scratches, blemishes, and stains.

3.3 TESTING

A. After final connections are made and prior to authorizing payment, specified equipment shall be tested for compliance with all specified features in the presence of the CTDOT PM using acceptance procedures provided by the manufacturer.

3.4 CLEANUP

A. Touch-up damage to painted finishes.

B. Wipe and clean equipment of any oil, grease, and solvents, and make ready for use.

C. Clean area around equipment installation and remove packing or installation debris from job site.

D. Notify CTDOT PM for acceptance inspection.

3.5 TRAINING

A. Direct the technical representative to provide specified hours of training to designated Owner's maintenance personnel in operation and maintenance of the following equipment. Coordinate, with Owner, training schedule and list of personnel to be trained.

1. FORKLIFT, ELECTRIC, SIT-DOWN, 4,000 POUND
   Equipment Mark Number: 5350
   Hours Required: x

B. Obtain, from technical representative, a list of Owner's personnel trained in equipment operations and maintenance.

C. Provide a Windows compatible movie file format recording on DVD disk of the training session. The DVD training movie can be of a live session or a produced training video.

END OF SECTION 41 63 00

SECTION 44 11 16 - INDUSTRIAL DUST COLLECTORS

PART 1 - GENERAL

The General Provisions of the Trade Contract, including General and Special Conditions and the requirements of Division 1, apply to the Work in this Section.

1.1 WORK INCLUDED

A. Equipment items as listed below:

1. DUST COLLECTION SYSTEM, CENTRAL, SHOP, WOODWORKING Designation DC-1.

B. Roughing-in, installation of equipment, and final connection of utilities, with labor, services, and incidentals necessary for complete and operational equipment installation.

C. Piping, wiring, and switching between equipment and utilities.

1.2 QUALITY ASSURANCE

A. Experience: Equipment shall be produced by a manufacturer of established reputation with a minimum of five years experience supplying specified equipment.

B. Manufacturer's Representative:

1. Installation: Provide a qualified manufacturer's representative at site to supervise work related to equipment installation, check out and start up.

2. Training: Provide technical representative to train Owner's maintenance personnel in operation and maintenance of specified equipment.

1.3 STANDARD AND REGULATORY REQUIREMENTS

A. Equipment indicated within this specification section shall comply with all applicable national, state and local codes and regulations, including seismic, fire, and racking codes and regulations. Additional, more specific compliance requirements may be listed under individual equipment headings.

1.4 SUBMITTALS

A. Refer to Section 11 06 00 Equipment Schedule for submittal requirements listed in the “Submittals” column of the equipment list. In the event of conflict between Section 11 06 00 Equipment Schedule and the following expanded submittal descriptions, Section 11 06 00 Equipment Schedule is to govern.

B. Product Data:

1. Submit Product Data in accordance with Division 1 - General Requirements of these specifications.

2. All Product Data submittals shall identify proposed project specific items marked by arrow, circle, underline, reproducible highlight, or other markings clearly discernable by the reviewer, to show which specific items, parts and accessories are being submitted for the project product data review. Non-marked or generic product data submittals with no marks indicating specific items, parts and accessories will be a cause for rejection.

3. Restrict submitted material to pertinent data. For instance, do not include manufacturer's complete catalog when pertinent information is contained on a single page.

C. Operation and Maintenance Manual:

1. Provide a Complete parts list, operating instructions, and maintenance manual covering equipment at time of installation including, but not limited to:

a. Description of system and components.

b. Schematic diagrams of electrical, plumbing and compressed air systems.

c. Manufacturer's printed operating instructions.

d. Printed listing of periodic preventive maintenance items and recommended frequency required to validate warranties. Failure to provide maintenance information will indicate that preventive maintenance is not a condition for validation of warranties.

e. List of original manufacturer's parts, including suppliers' part numbers and cuts, recommended spare parts stockage quantity and local parts and service source.

2. Assemble and provide copies of manual in 8-1/2 by 11 inch format. Foldout diagrams and illustrations are acceptable. Manual to be reproducible by dry copy method. Provide copies per provisions of Division 1 - General Requirements.

D. Shop Drawings: Submit in accordance with Division 1 -General Requirements of these specifications. Refer to Section 11 06 00 Equipment Schedule for the equipment mark numbers requiring shop drawings.

1. Submitted shop drawings shall be project specific and shall include a minimum 1/8 inch to 1 foot scaled (or larger standard architectural imperial scale), dimensioned, graphical representation of the size, orientation, and location for the submitted equipment. The drawings shall further include dimensions from structural elements or architectural grid lines, operational clearances, locations of any utility service connection points, mounting requirements, and structural supports required for the submitted equipment.

1.5 PRODUCT SUBSTITUTIONS

A. Follow requirements specified in Division 1 - General Requirements.

B. Additional costs resulting from substitution of products other than those specified, including drawing changes and construction, will be at the expense of the Trade Contractor.

C. Substitution Approval: Manufacturers listed for each equipment item may bid without submittal for that item. Manufacturers not listed shall submit for approval in accordance with "Instructions to Bidders". Prior to procurement, submittals for each equipment item by Mark Number shall be provided in accordance with Division 1 - General Requirements.

1.6 WARRANTY

A. Warrant work specified herein for eighteen months from substantial completion against defects in materials, function and workmanship.

B. Warranty shall include materials and labor necessary to correct defects.

C. Defects shall include, but not be limited to noisy, rough or substandard operation; loose, damaged, and missing parts; and abnormal deterioration of finish.

D. Submit warranties in accordance with Division 1 - General Requirements of these specifications.

E. All parts must be readily available locally in the United States.

1.7 PRODUCT DELIVERY, STORAGE, AND HANDLING

A. Deliver equipment in manufacturer's containers, appropriately packaged and/or crated for protection during shipment and storage in humid, dusty conditions.

B. Indelibly label all containers, including those contained in others, on outside with item description(s) per title and Mark Number of this specification.

C. Provide equipment and materials specified complete in one shipment for each equipment item. Split or partial shipments are not permissible.

1.8 LABELING

A. Manufacturer will securely attach in a prominent location on each major item of equipment a non-corrosive nameplate showing manufacturer's name, address, model number, serial number, and pertinent utility or operating data.

B. All electrical equipment and materials shall be new and shall be listed by Underwriter's Laboratories, Inc. (U.L.), or other National Recognized Testing Laboratory (NRTL), in categories for which standards have been set by that agency and labeled as such in the manufacturer's plant.

PART 2 – PRODUCTS

2.1 DUST COLLECTION SYSTEM, CENTRAL, SHOP, WOODWORKING

A. General:

1. Description: The system shall be designed for effective source capture of dust and chips generated by stationary woodworking equipment and clean up stations. It shall collect, transport, filter, and contain fine woodworking particulate through a centralized collection unit. It shall be zoned, piped and sized to handle the simultaneous dust collecting operations of stationary equipment and convenience inlets as specified below.

2. Compliance: The equipment shall be in compliance with current editions of all applicable local, state, and federal codes and regulations. The equipment shall also comply with the following:

a. NFPA 13: Standard for the Installation of Sprinkler Systems.

b. NFPA 15: Standard for Water Spray Fixed Systems for Fire Protection.

c. NFPA 68: Standard on Explosion Protection by Deflagration Venting.

d. NFPA 70: National Electric Code (NEC). All portions of the electrical wiring for the dust collector shall be compliant with the latest edition of this code, as well as the appropriate sections of Division 26.

e. NFPA 664: Prevention of Fires and Explosions in Wood Processing and Woodworking Facilities.

f. Industrial Ventilation: A Manual of Recommended Practice, most recent edition.

B. Major components:

1. Vacuum producer.
2. Filter unit.
3. Pre-separator.
4. Ducting.
5. Valves.
6. Suction casings.
7. Hoses.
8. Electrical panel/PLC.

C. Capacities and Dimensions:

1. Performance: The dust collection system shall be capable of providing the listed minimum air flow in cubic feet per minute (CFM) for each equipment item, as measured from the point of connection to the wood dust producing equipment (source):

a. 23211 - Jointer: 450 CFM.

b. 27011 – Saw, band, wood: 600 CFM.

c. 27151 – Saw, radial arm: 400 CFM.

d. 27141 – Wall mounted panel saw: 600 CFM.

e. 2725 – Saw, table, tilting arbor, 14 inch: 400 CFM.

f. Shop cleanup valve: 400 CFM.

2. Suction rating:

a. Maximum required airflow as measured from source: 900 CFM.

b. Maximum static pressure: 80 inches water column.

c. Maximum stations in simultaneous use: 3.

d. Minimum transport velocity in ductwork: 4,500 feet per minute (FPM).

3. Motor: 16.9 horsepower (HP), 11 kilowatts (kW), 3600 revolutions per minute (RPM)

4. Filtration:

a. Primary cyclone separator: Up to 95 percent of total dust, nominal.

b. Main filter: 99.89 percent down to 1-3 microns per DIN 24184/3.

c. Filter area: 90.4 square feet.

5. Noise rating: Less than 68 decibels (dBA).

6. Dimensions:

a. Vacuum producer/filter unit:

1) Width: 29 inches.

2) Depth: 52 inches.

3) Height: 75 inches.

b. Cyclone pre-separator:

1) Width: 28 inches.

2) Depth: 28 inches.

3) Height: 102 inches.

D. Features and Construction:

1. General: Dust collector unit shall utilize two-stage cyclone filtration for course material and washable, cylindrical, pleated polyester cartridge media filtration for fine material, and shall operate in a low volume/high velocity and high suction pressure mode for minimum loss of tempered facility air.

1. Vacuum producer: Direct coupled, low speed turbo-pump of branch canal design for production of high vacuum pressure, rated for 1,500 hours continuous duty

without lubrication. Vacuum relief valve to provide cooling air in the event all inlets are restricted. The unit shall have built-in sound absorbing panels so that the sound level will not exceed 68 dBa. Motor shall be totally enclosed fan cooled (TEFC), dust proof and spray proof with 10,000 hour continuous duty rating. The unit shall be mounted on a common chassis.

2. Filter unit: Body of unit shall function as a primary filtration cyclone separator and enclosed main filter. A metal jacket shall deflect particulate away from the filter and enhances the cyclonic separation. Filter shall be of pleated, polyester material suitable for fibrous dusts. Service life shall be at least one year. Unit shall be equipped with self-contained reverse pulse filter cleaning. The filter unit shall be reinforced to withstand a maximum allowable internal pressure of 0.5 pounds per square inch (PSI) during a vented deflagration (Pred), and shall be equipped with an explosion relief vent. Collected dust particles shall discharge automatically through a suction flap valve into a steel canister lined with an antistatic plastic sack.

3. Pre-separator: A high efficiency cyclone pre-separator designed to remove the bulk of dust and chips shall be installed ahead of the filter unit. The pre-separator shall be designed with a cylindrical steel body and function to remove heavy dust before reaching the dust extractor filter unit to extend filter life. The pre-separator unit shall be reinforced to withstand a maximum allowable internal pressure of 0.5 pounds per square inch (PSI) during a vented deflagration (Pred), and shall be equipped with an explosion relief vent. Collected dust particles shall discharge automatically through a suction flap valve into a steel canister lined with an antistatic plastic sack.

2. Ducting: The dust collection system shall be connected to the wood dust producing equipment by means of overhead ducting with vertical ducting drops. Ducting shall consist of minimum of .06 inches thickness galvanized steel pipe connections shall be butt fit with rubber lined steel band clamps to join ducting components. Clamps and ducting must be reusable in the event of dismantling and re-configuration of the system. Flange ducting is not acceptable. Pipe diameter shall not exceed 4-1/4 inches. Ducting shall be free of internal interruptions from screws, rivets or fasteners. Entire ducting system shall be fully grounded and bonded.

3. Valves:

   a. Stationary equipment valves: Each of the stationary equipment suction outlets shall be set up for on-demand start/stop automatic operation by equipping flap valves with micro-switches to produce a start/stop signal for the vacuum producer control. The shutter valves shall have stainless steel gates and not exceed 4 inches in diameter. Gates shall be driven by pneumatic cylinders and actuated by solenoid valves. When equipment is shut off, an adjustable valve shall delay shutter valve closing slightly to permit all dust or debris to clear the suction casing and hose.

   b. Shop cleanup valves: Dust collection system shall be equipped with 2 inch flap valves for removable connection of the suction hose to the tubing system. The spring loaded flap valves shall open manually when the hose

cuff is inserted into the valve body. The system shall be equipped with on demand start-stop by equipping flap valves with micro-switches, producing a start-stop signal for vacuum producer control.

4. Suction casings: System supplier must be able to supply suction casings, which shall include a metal inlet and metal clamping mechanism, to fit stationary equipment as shown on the Drawings for effective dust collection operation. Suction casings shall have close tolerances creating high velocity suction to capture dust and pollutants at their source. Flexible rubber collars, if used, shall be replaceable.

5. Hoses: Hose and hose couplings shall be flexible with smooth inside walls for low-pressure drop. All hose and connectors must be conductive to eliminate static charge. Wire hose is not acceptable. Hose diameter shall be matched to fit the intended use or equipment requirements.

6. Vibration isolation pads: Vibration isolation pads shall be provided and installed according to manufacturer's recommendation and instruction.

7. Control panel / electrical panel and PLC:

   a. The electrical panel shall be a pre-wired, 460 volt, 3 phase, 60 Hertz NEMA 12 (indoor use) rated main electrical control panel containing motor starters, step-down transformer for control circuits and a programmable logic controller (PLC).

   b. The PLC shall control all logic functions, system timing and alarm functions. Electro-mechanical relays are not acceptable. The PLC shall be heavy-duty industrial type and have a minimum 1K-instruction memory, EEPROM memory back up.

   c. Programming of the PLC shall include automatic shut-off during periods of non-use for energy conservation, and shall control the automatic filter cleaning programmed to occur during the shut-off periods. It also shall be programmed according to a seven-day 24-hour clock to comply with manufacturing demands, and be equipped with a one hour plus/minus adjustment.

   d. The control panel enclosure shall be equipped with a lockout/tagout type disconnect switch. The control panel door shall have a display panel on the door indicating Start and Stop functions, System On and System Off notification, Filter Cleaning functions, and System Fault. The door shall also include a green start button, and a red emergency stop button with oversize head.

   e. The control panel door shall include a run time (hour) meter for tracking pump run hours.

   f. Panel shall be built by a provider who is certified by nationally recognized testing laboratory (NRTL) as accredited by OSHA and include the NRTL's listed serialized label.

E. Accessories:

a. Suction pipe, Model# 7257, two each.

b. Floor Nozzle, Model# A450/38 #7236, two each.

c. Round Suction Brush, Model# 7278, two each.

d. Steel Crevice Tool, Model# 7213, two each.

e. Hose Hanger, White Enamel, Model# 4473, two each.

f. Anti-static Black Hose, 23 feet long, 2 inch diameter down to 1-1/2 inch diameter, with rotating connector, two each.

g. Anti-static Black Hose, 23 feet long, 1-1/2 inch diameter down to 1-1/4 inch diameter, with rotating connector, two each.

h. Waste Sacks, box of 50, Model# 4614, one each.

F. Utilities Available:

1. Electrical: 460 VAC, 3 Phase, 27 Amps (16.9 HP).

2. Compressed Air: 90 PSI, 9 CFM.

3. Exhaust: 4-1/4 inches.

G. Finish: Manufacturer’s standard enamel finish.

H. Installation

1. The central dust collection system shall be piped throughout the building as required to capture airborne dust generated by the various process tools used specific areas of the project as indicated in the drawings.

2. Dust shall be effectively captured at the tool prior to its escape into the air. The system shall be complete including the dust extractor unit, system suction and exhaust piping, hose sets, cleaning tools and suction casings.

3. Electrical wiring shall be in accordance with the latest edition of the National Electric Code and the appropriate sections of Division 16.

I. Manufacturers Reference:

1. Prime manufacturer: Specifications are based on equipment identified herein by manufacturer's name and model to establish acceptable standards of quality, performance, features, and construction.

a. Dustcontrol Inc.
6720 Amsterday Way
Wilmington, North Carolina 28405
Phone: (910) 395-1808
Fax: (910) 3395-2110
Website: www.dustcontrol.com

b. Model: DC11-Mod Dust Extractor with F11000 Pre-separator and Accessories

2. Other manufacturers: Contingent upon compliance with these specifications and documentation requirements set forth in SUBMITTALS, equipment produced by other manufacturers, including the following, may be considered as equal.

a. Eurovac
116 Buttermill Ave.
Concord, ON, Canada L4K 3X7
Phone: (905) 738-9255, (800) 265-3878
Fax: (905) 738-4603
Website: www.eurovac.com

b. Donaldson Company, Inc. (Donaldson-Torit)
P.O. Box 1299
1400 West 94th Street
Minneapolis, MN, 55440
Telephone: 1 (888) 338-3878
Website: www.donaldson.com

PART 3 - EXECUTION

3.1 INSPECTION

A. Coordinate location of rough-in work and utility stub-outs to assure match with equipment to be installed.

B. Inspect delivered equipment for damage from shipping and exposure to weather.

C. Compare delivered equipment with packing lists and specifications to assure receipt of all items.

3.2 INSTALLATION

A. Perform work under direct supervision of Foreman or Construction Superintendent with authority to coordinate installation of scheduled equipment with CTDOT PM.

B. Install equipment in accordance with plans, shop drawings and manufacturer's instructions:

1. Positioning: Place equipment in accordance with any noted special positioning requirements generally level, plumb and at right angles to adjacent work.

2. Fitting: Where field cutting or trimming is necessary, perform in a neat, accurate, professional manner without damaging equipment or adjacent work.

3. Anchorage: Attach equipment securely to floor, as directed by CTDOT PM, to prevent damage resulting from inadequate fastening. Installation fasteners shall be installed to avoid scratching or damaging adjacent surfaces.

4. Upon completion of work, finish surfaces shall be free of tool marks, scratches, blemishes, and stains.

3.3 TESTING

A. After final connections are made and prior to authorizing payment, specified equipment shall be tested for compliance with specification in the presence of the CTDOT PM using acceptance procedures provided by the manufacturer.

B. Final testing and post installation inspection are required, and shall be performed by the manufacturer or the manufacturer's designated representative only. Final testing and inspection shall not be performed by the installer, unless the installer is also the manufacturer.

3.4 CLEANUP

A. Touch-up damage to painted finishes.

B. Wipe and clean equipment of any oil, grease, and solvents, and make ready for use.

C. Clean area around equipment installation and remove packing or installation debris from job site.

D. Notify CTDOT PM for acceptance inspection.

3.5 TRAINING

A. Direct the technical representative to provide specified hours of training to designated Owner's maintenance personnel in operation and maintenance of the following equipment. Coordinate, with Owner, training schedule and list of personnel to be trained.

1. DUST COLLECTION SYSTEM, CENTRAL, SHOP, WOODWORKING
Equipment Mark Number: 2240
Hours Required: 2

B. Obtain, from technical representative, a list of Owner's personnel trained in equipment operations and maintenance.

C. Provide a Windows compatible movie file format recording on DVD disk of the training session. The DVD training movie can be of a live session or a produced training video.

END OF SECTION 44 11 16

ECTION 44 11 37 - FUME AND EXHAUST EXTRACTION SYSTEMS

PART 1 - GENERAL

The General Provisions of the Trade Contract, including General and Special Conditions and the requirements of Division 1, apply to the Work in this Section.

1.1 WORK INCLUDED

A. Equipment items as listed below by Equipment Mark Number:

1. EXTRACTOR, FUME, WITH EXTENSION ARM
   Equipment Mark Number: 3200

2. EXTRACTOR, FUME, MINI
   Equipment Mark Number: 3202

3. REEL, VEHICLE EXHAUST, MOTOR OPERATED, WITH 8 INCH HOSE
   Equipment Mark Number: 3305

B. Roughing-in, installation of equipment, and final connection of utilities, with labor, services, and incidentals necessary for complete and operational equipment installation.

C. Piping, wiring, and switching between equipment and utilities.

1.2 ALTERNATIVE BIDS

A. Refer to Division 1 - General Requirements for possible effect on Work of this Section.

1.3 QUALITY ASSURANCE

A. Experience: Equipment shall be produced by a manufacturer of established reputation with a minimum of five years experience supplying specified equipment.

B. Manufacturer's Representative:

1. Installation: Provide a qualified manufacturer's representative at site to supervise work related to equipment installation, check out and start up.

2. Training: Provide technical representative to train Owner's maintenance personnel in operation and maintenance of specified equipment.

1.4 STANDARD AND REGULATORY REQUIREMENTS

A. Equipment indicated within this specification section shall comply with all applicable national, state and local codes and regulations, including seismic, fire, and racking codes and regulations. Additional, more specific compliance requirements may be listed under individual equipment headings.

1.5 SUBMITTALS

A. Refer to Section 11 06 00 Equipment Schedule for submittal requirements listed in the "Submittals" column of the equipment list. In the event of conflict between Section 11 06 00 Equipment Schedule and the following expanded submittal descriptions, Section 11 06 00 Equipment; Equipment Schedule is to govern.

B. Product Data:

1. Submit Product Data in accordance with Division 1 - General Requirements of these specifications.

2. All Product Data submittals shall identify proposed project specific items marked by arrow, circle, underline, reproducible highlight, or other markings clearly discernable by the reviewer, to show which specific items, parts and accessories are being submitted for the project product data review. Non-marked or generic product data submittals with no marks indicating specific items, parts and accessories will be a cause for rejection.

3. Restrict submitted material to pertinent data. For instance, do not include manufacturer's complete catalog when pertinent information is contained on a single page.

C. Operation and Maintenance Manual:

1. Provide a Complete parts list, operating instructions, and maintenance manual covering equipment at time of installation including, but not limited to:

a. Description of system and components.

b. Schematic diagrams of electrical, plumbing and compressed air systems.

c. Manufacturer's printed operating instructions.

d. Printed listing of periodic preventive maintenance items and recommended frequency required to validate warranties. Failure to provide maintenance information will indicate that preventive maintenance is not a condition for validation of warranties.

e. List of original manufacturer's parts, including suppliers' part numbers and cuts, recommended spare parts stockage quantity and local parts and service source.

2. Assemble and provide copies of manual in 8-1/2 by 11 inch format. Foldout diagrams and illustrations are acceptable. Manual to be reproducible by dry copy method. Provide copies per provisions of Division 1 - General Requirements.

D. Submit Shop Drawings in accordance with Division 1 -General Requirements of these specifications. Refer to Section 11 06 00 Equipment Schedule for the equipment mark numbers requiring shop drawings.

1. Submitted shop drawings shall be project specific and shall include a minimum 1/8 inch to 1 foot scaled (or larger standard architectural imperial scale), dimensioned, graphical representation of the size, orientation, and location for the submitted equipment. The drawings shall further include dimensions from structural elements or architectural grid lines, operational clearances, locations of any utility service connection points, mounting requirements, and structural supports required for the submitted equipment.

2. Submitted shop drawings shall indicate, where applicable, coordination with other project specific conditions and/or specified equipment which directly affects performance of the submitted equipment, such as ductwork, fans, vents, electrical utilities, etc.

3. Submitted shop drawings shall include a clear indication of the expected range of air exhaust generated by the entire system (provided in cubic feet per minute) as measured at the source of each exhaust hose, capture hood, or vacuum port when the submitted equipment is functioning under the widest range of reasonably expected operating conditions. Submitted shop drawings shall also contain expected static pressures of the system, expected air velocities generated by the system, pertinent cross sectional areas, and calculations used to determine performance of the system.

4. A copy of ductwork shop drawings, indicating all ductwork connected to the equipment specified herein. This copy shall be submitted to the equipment consultant for informational purposes only, not requiring approval from the equipment consultant.

E. Test Reports: Provide to the equipment consultant a copy of all testing and balancing (TAB) reports that specifically refer to mechanical systems physically connected to equipment specified herein. This copy shall be submitted to the equipment consultant for informational purposes only, not requiring approval from the equipment consultant. Refer to appropriate specification Section 23 05 93 Testing, Adjusting, and Balancing for HVAC for information on TAB report requirements, as well as Part 3.03 Testing, of this specification below.

1.6 PRODUCT SUBSTITUTIONS

A. Follow requirements specified in Division 1 - General Requirements.

B. Additional costs resulting from substitution of products other than those specified, including drawing changes and construction, will be at the expense of the Trade Contractor.

C. Substitution Approval: Manufacturers listed for each equipment item may bid without submittal for that item. Manufacturers not listed shall submit for approval in accordance with "Instructions to Bidders". Prior to procurement, submittals for each equipment item by Mark Number shall be provided in accordance with Division 1 - General Requirements.

1.7 WARRANTY

A. Warrant work specified herein for eighteen months from substantial completion against defects in materials, function and workmanship.

B. Warranty shall include materials and labor necessary to correct defects.

C. Defects shall include, but not be limited to noisy, rough, or substandard operation; loose, damaged, and missing parts; and abnormal deterioration of finish.

D. Submit warranties in accordance with Division 1 - General Requirements of these specifications.

E. All parts shall be readily available locally in the United States.

1.8 PRODUCT DELIVERY, STORAGE, AND HANDLING

A. Deliver equipment in manufacturer's containers, appropriately packaged and/or crated for protection during shipment and storage in humid, dusty conditions.

B. Indelibly label all containers, including those contained in others, on outside with item description(s) per title and Mark Number of this specification.

C. Provide equipment and materials specified complete in one shipment for each equipment item. Split or partial shipments are not permissible.

1.9 LABELING

A. Manufacturer shall securely attach in a prominent location on each major item of equipment a non-corrosive nameplate showing manufacturer's name, address, model number, serial number, and pertinent utility or operating data.

B. All electrical equipment and materials shall be new and shall be listed by Underwriter's Laboratories, Inc. (U.L.), or other National Recognized Testing Laboratory (NRTL), in categories for which standards have been set by that agency and labeled as such in the manufacturer's plant.

PART 2 – PRODUCTS

2.1 EXTRACTOR, FUME, WITH EXTENSION ARM
Equipment Mark Number: 3200

A. General:

1. Description: An articulated fume exhaust extraction arm, extension arm, ductwork and fan, all designed for fume source capture. The fume extractor with extension arm shall allow for effective placement of the source capture hood within a large floor area.

2. Compliance: The fume extractor and extension arm shall comply with the most current editions of all applicable local, state, and federal codes and regulations, including the codes, regulations, and standards listed below.

a. 29 CFR 1926.353 Ventilation and Protection in Welding, Cutting, and Heating as enforced by Occupational Safety and Health Administration (OSHA).

b. 29 CFR 1910.95 Occupational Noise Exposure as enforced by Occupational Safety and Health Administration (OSHA).

c. NFPA 70: National Electric Code (NEC), most recent edition.

d. Industrial Ventilation: A Manual of Recommended Practices, as published by the American Conference of Industrial Hygienists (ACGIH), most recent edition.

B. Capacities and Dimensions:

1. Required airflow produced by the fume extractor: 800 cubic feet per minute (CFM), minimum, as measured at the source capture hood.

2. Air capture velocity produced by the fume extractor: 100 feet per minute (FPM), nominal, as measured approximately 9-12 inches from the face of the source capture hood.

3. Total system static pressure: 6 inch water column, approximate.

4. Exhaust fan motor: 2.8 horsepower (HP), nominal.

5. Total system fume temperature tolerance: 150 degrees Fahrenheit, maximum.

6. Total reach (fume extractor arm with extension boom arm): 28 feet, approximate.

7. Fume extractor arm diameter: 8 inches, approximate.

8. Fume extractor arm length: 14 feet, approximate.

9. Extension arm diameter: 8 inches, approximate.

10. Extension arm length: 14 feet, approximate.

11. Extension arm degrees of pivot at wall attachment: 180 degrees, minimum.

12. Extension arm degrees of pivot at midpoint joint: 180 degrees, minimum.

13. Extension arm supporting weight capacity: 110 pounds, minimum.

14. Extension arm mounting height (bottom of extension boom arm): 10 feet 0 inches.

15. Total system weight, nominal: 250 pounds, nominal.

C. Features and Construction:

1. Extension arm: The extension arm shall consist of two steel sections of approximately equal length and joined with a twin bearing joint connection to allow the support arm to fold in on itself, thereby allowing the source capture hood to be manually positioned directly below the wall mount during normal use. Extension arms without this midpoint joint will not be accepted. The extraction hose shall be attached to the extension arm through the use of four brackets. The unit shall also

include a pivoting wall bracket and fume extractor adaptor. The extension arm shall have an enamel painted finish.

2. Fume extractor: Fiberglass reinforced PVC hose, with flexible 360 degree swivel elbow at the extension arm joint connection, support flange, internal hose support, adjustable damper with positive seal, and fume extractor hood. The extractor hood shall be an oval polycarbonate with an approximately 10 inch by 12 inch opening.

3. Exhaust fan: The exhaust fan shall be certified by the Air Movement and Control Association (AMCA), meet AMCA Type B spark resistant requirements, be a direct drive fan, and shall be suitable for high pressure, low volume fume exhaust applications. The fan wheel shall be cast aluminum construction with a radial blade design. The fan motor shall be a standard industrial, continuous duty, ball bearing, variable torque type. Motor bearings shall have a minimum L-10 life, as defined by the Anti Friction Bearing Manufacturers Association (AFBMA), of 40,000 hours, minimum. The housing shall be heavy duty cast aluminum construction and shall have an adjustable discharge housing which can be field rotated to any standard position.

4. Noise level: The equipment shall have a maximum rating less than 85 decibels and not require hearing protection for workers in the area, per 29 CFR 1910.95 Occupational Noise Exposure.

D. Controls:

1. Control box: A NEMA 12 control box / starter with integrated disconnect switch and on/off fan control switch shall be provided. Electrical transformer shall be included, as necessary.

2. The fan shall automatically start when the hood mounted manual switch is turned on.

E. Accessories:

1. Spotlight/fan switch: A 24 volt, 20 watt halogen lamp mounted in the fume extractor hood with protective grill, and fan switch, one each.

2. Extension cable: Light and fan extension cable for use with extension arm, one each.

3. Particle filter: An in-line modular particle filter with mounting bracket for use in capturing welding smoke and fine particles, with cellulose type filter, up to 99 percent efficiency, one each. Include additional spare particle filter, one each.

4. Incidentals: Provide all components and hardware necessary for a complete and operable installation, from hood intake to fan exhaust.

F. Utilities Available:

1. Electrical: 460 VAC, 3 Phase, 60 Hertz, 4.8 Amps (3 horsepower).

2. Mechanical: 8 inch, minimum, exhaust to exterior.

G. Manufacturers Reference:

1. Prime manufacturer: Specifications are based on equipment identified herein by manufacturer's name and model number to establish acceptable standards or of quality, performance, features and construction.

   a. Monoxivent, Inc.
      1306 Mill Street
      Rock Island, IL 61201
      Phone: (309) 794-1000
      Fax: (309) 794-1020
      Website: www.monoxivent.com

   b. Model: 15148 extraction arm, PAC-15 extension arm, Twin City type TPD 14R08-122 pressure blower, with accessories.

2. Other manufacturer's: Contingent upon compliance with these specifications and documentation requirements set forth in SUBMITTALS, equipment produced by other manufacturer's, including the following, may be considered as equal.

   a. Car-Mon Products, Inc.
      1225 Davis Road
      Elgin, IL 60123
      Phone: (847) 695-9000
      Fax: (847) 695-9078
      Website: www.car-mon.com

   b. Plymovent
      115 Melrich Road
      Cranbury, NJ 08512
      Phone: (609) 395-3502
      Fax: (609) 655-0569
      Website: www.plymovent.com

   c. Nederman
      6330 Commerce Drive
      Westland, MI 48185
      Phone: (734) 729-3344, (800) 575-0609
      Fax: (734) 729-3358
      Website: www.nedermanusa.com

2.2 EXTRACTOR, FUME, MINI
Equipment Mark Number: 3202

A. Capacities and Dimensions:

1. Extractor arm:

a. Base dimensions:

1) Length: 3-1/8 inches.

2) Width: 5-1/8 inches.

3) Height: 9-7/8 inches.

b. Arm sections:

1) Number of sections: 3 total.

2) Length of sections: 21-5/8, 21-5/8, and 9-7/8 inches.

3) Inner dimensions: 3 by 1-5/8 inches.

c. Degrees of pivot: 180 degrees.

d. Hose connection size: 3 inches.

e. Recommended air velocity: 80 CFM.

f. Maximum reach: 3 feet 6 inches.

2. Hood dimensions:

a. Length: 15 inches.

b. Width: 5 inches.

c. Height: 11 inches.

3. Filter:

a. Area: 27 square feet.

b. Separation rating (0.3 micron DOP test): 99.97 percent.

4. Fan:

a. Length: 12-1/2 inches.

b. Width: 5 inches.

c. Height: 6-1/2 inches.

d. Air capacity: 170 CFM.

e. Motor: 1/5 HP.

5. Hose length: 8 feet.

6. Decibel rating (measured one foot from hood): 55-58 dB(A).

7. Weight: 31 pounds, nominal.

B. Features and Construction:

1. Extractor arm: Arm shall be designed for table mounting and possess three friction joints and a swiveling base. The arm shall be constructed of polypropylene plastic with a temperature rating of 212 degrees Fahrenheit at continuous use. Arm shall come complete with mounting base, arm piece, locking washer joints, adjustment knobs, and internal suspension ring.

2. Hood: The top and sides of the adjustable hood shall be constructed of polypropylene plastic with the rear being constructed of anodized aluminum plate. The hood shall clip to the extractor arm and process adjustable side flaps and top flap to facilitate effective extraction.

3. Filter: The filter shall be comprised of both particle and gas separation components. The gas filter shall be activated carbon filter embedded in s filter blanket. The particle filter shall be comprised of two corrugated layers being a HEPA filter made of glass fiber and a protective filter of polyester.

4. Fan: Complete with motor protector, manual reset system, variable speed control, grounding cable, and power plug.

5. Hose: System shall come complete with white PVC plastic hose with connections for linking extractor arm and fan.

C. Controls: System shall be provided with a variable speed controller with start/stop to allow adaptable extraction rates by adjusting the speed of the fan.

D. Accessories: Replacement filter, Nederman Part No. 70311427, two each.

E. Finish: Steel arms shall be painted with durable enamel in Manufacturer's standard color.

F. Utilities Available: 110 VAC, 1 Phase, 1/5 HP total.

G. Manufacturers Reference:

1. Prime manufacturer: Specifications are based on equipment identified herein by manufacturer's name and model number to establish acceptable standards or of quality, performance, features and construction.

a. Nederman
6330 Commerce Drive
Westland, MI 48185
Phone: (734) 729-3344, (800) 575-0609
Fax: (734) 729-3358
Website: www.nedermanusa.com

b. Model: Extractor Kit 2000, Model 70505244

2. Other manufacturer's: Contingent upon compliance with these specifications and documentation requirements set forth in SUBMITTALS, equipment produced by other manufacturer's, including the following, may be considered as equal.

a. Monoxivent, Inc.
1306 Mill Street
Rock Island, IL 61201
Phone: (309) 794-1000
Fax: (309) 794-1020
Website: www.monoxivent.com

b. Pace, Inc.
255 Air Tool Drive
Southern Pines, NC 28387
Phone: (910) 695-7223
Fax: (910) 695-1594
Website: www.paceworldwide.com

2.3 REEL, VEHICLE EXHAUST, MOTOR OPERATED, WITH 8 INCH HOSE
Equipment Mark Number: 3305

A. General:

1. Description: An exhaust hose with motorized reel and exhaust fan**,** to be connected to an exhaust ductwork system, designed specifically for the purpose of connecting to and exhausting fumes from the tailpipes of running stationary diesel fueled vehicles which undergo high temperature exhaust particulate filter regeneration, or otherwise have high temperature exhaust emissions.

2. Compliance: The equipment shall comply with the most current editions of all applicable local, state, and federal codes and regulations, including, but not limited to, those listed below.

a. 29 CFR 1910.94 Ventilation, as enforced by the Occupational Safety and Health Administration (OSHA).

b. NFPA 88B Standard for Repair Garages, most recent edition.

c. NFPA 90A Standard for the Installation of Air Conditioning and Ventilating Systems, most recent edition.

d. NFPA 70: National Electric Code (NEC), most recent edition.

e. UL 94 – Standard for Safety of Flammability of Plastic Materials for Parts in Devices and Appliances Testing.

B. Capacities and Dimensions:

1. Required air flow: 1,400 cubic feet per minute (CFM), minimum, as measured at the exhaust hose nozzle (source), with 8 feet (approximately 25 percent) of the total hose unwound from the reel.

2. Total system static pressure: 7.5 inches water column, nominal.

3. Temperature resistance: 2,000 degrees Fahrenheit, minimum, as measured from the exhaust hose nozzle (source).

4. Exhaust hose diameter: 8 inches, minimum.

5. Exhaust hose length: 33 feet, nominal, with hose connect interlock located at the first 10 feet of hose, as measured from the exhaust hose nozzle (source).

6. Reel motor output: 1/6 horsepower (HP), nominal.

7. Reel motor speed: 14 revolutions per minute (RPM), nominal.

8. Fan motor output: 3.25 HP, nominal.

9. Fan motor speed: 2,780 revolutions per minute (RPM), nominal.

10. Decibel level at a distance of 5 feet: 85 dBa, maximum.

11. Overall reel dimensions:

    a. Length: 55 inches, nominal.

    b. Drum diameter: 18 inches, nominal.

    c. Drum flange diameter: 25 inches, nominal.

    d. Height: 30 inches, nominal.

12. Total system weight: 110 pounds, nominal.

C. Features and Construction:

1. System components: The exhaust system shall consist of a drum, support, reel motor, planetary gear, brake mechanism, control switch, hose guide, exhaust hose, nozzle, exhaust fan, mechanical ductwork between reel and fan, mechanical duct from fan to mechanical exhaust system, and miscellaneous hardware necessary for a complete and operable system.

2. Drum: The drum shall be 16 gauge cold rolled steel cylinder bolted to two metal ends with internal support bars. An eight inch diameter tube shall be inside the drum to connect the exhaust hose to the side exhaust port of the reel.

3. Support: The reel shall be supported by 11 gauge cold rolled steel frame with corrosion resistant finish.

4. Reel motor: The reel motor shall be totally enclosed, dust tight, spray tight, with insulation class B. The reel shall include any necessary electrical transformers. The reel motor and drive system shall be Underwriter's Laboratory (UL) or other Nationally Registered Testing Laboratory (NRTL) approved. The reel shall be equipped with a limit switch for both recoil and uncoiling of the hose.

5. Brake mechanism: The drum shall automatically lock when hose feed stops.

6. Hose guide: The reel assembly shall provide for guiding the exhaust hose on the drum during the first coil, as measured from the exhaust hose nozzle (source).

7. Hose: The first ten feet of hose, as measured from the exhaust source, shall have a hose wall that shall consist of three layers of high temperature fabric coated with heat stabilizers and bound with a stainless steel external helix. The internal hose wall shall be reasonably smooth and free from corrugation. The hose shall be asbestos and silicone free and have a flame classification of V-0, per UL 94 testing procedures. The hose shall be capable of withstanding 2,000 degrees Fahrenheit continuously, and be 8 inches diameter; Monoxivent Series 7210 hose, one each.

   The remainder section of hose shall have a hose wall that shall consist of two layers of asbestos free high temperature fabric coated with heat stabilizers, reinforced with woven-in stainless steel wire, and bound with a galvanized steel external helix. The internal hose wall shall be reasonably smooth and free from corrugation. The hose shall be asbestos and silicone free and have a flame classification of V-0, per UL 94 testing procedures. The hose shall be capable of withstanding 1,200 degrees Fahrenheit continuously, and be 8 inches diameter; Monoxivent Series 7120 hose, one each.

8. Hose connection: An interlocking quick coupling hose connection shall be placed in the exhaust hose at the first ten feet of hose, as measured from the exhaust hose nozzle (source), and shall connect all portions of the hose.

9. Exhaust fan: A radial blade, backward inclined, belt driven blower suitable for high pressures and high temperatures for exhaust handling applications, and certified by the Air Movement and Control Association (AMCA). The fan shall be of spark proof construction and have a premium efficiency motor, vibration isolator set, a corrosion resistant coating, and come complete with a mounting platform, motor starter, disconnect switch, as well as belt, shaft and bearing guards.

10. Exhaust fan mounting: The exhaust fan shall not be connected directly on the reel. A minimum of 10 feet of interconnecting ductwork between the exhaust reel outlet and the exhaust fan inlet shall be provided. This ductwork shall be a straight run where possible, having minimum changes in direction, and maintain a consistent diameter no less than the diameter of the reel outlet.

11. Exhaust ductwork system: Refer to Mechanical drawings and specifications.

D. Controls:

Control box: A NEMA 12 control box / starter with integrated disconnect switch and on/off fan control switch shall be provided. Electrical transformer shall be included, as necessary.

1. Pendant control: A suspended pendant with strain relief mechanism, suspended at a height of 42 inches above finish floor, shall be provided. The pendant control shall have a minimum of four push buttons, two operating the coiling and uncoiling of the hose, and two operating the on/off functions of the fan.

E. Finish:

1. The entire hose reel drum and support system shall have a polyester powder coating or similar corrosion resistant finish in manufacturer's standard color.

F. Accessories:

1. Round stainless steel nozzle, 8 inch diameter at hose connection, with metal hose connector and tail pipe fastening device, specifically designed for use with high temperature exhaust, Monoxivent model number TCA-8 VG, one each.

2. Lifting cane for stack pipes, with pull down hook, 120 inches long, Monoxivent model number LP-10-H, one per exhaust reel.

G. Utilities Available:

1. Electrical:

a. Reel Motor: 120 VAC, 1 Phase, 5 Amp.s

b. Integral Exhaust Fan: 460 VAC, 3 Phase, 3 Horsepower (5 Amps).

2. Mechanical: 8.25 inch, nominal connection to individual roof mounted exhaust vent.

H. Manufacturers Reference:

1. Prime manufacturer: Specifications are based on equipment identified herein by manufacturer's name and model number to establish acceptable standards or of quality, performance, features and construction.

a. Monoxivent, Inc.
1306 Mill Street
Rock Island, IL 61201
Phone: (309) 794-1000
Fax: (309) 794-1020
Website: www.monoxivent.com

b. Model 9338-W-TMTR motor operated hose reel, BI-120 belt driven exhaust fan, with accessories.

2. Other manufacturer's: Contingent upon compliance with these specifications and documentation requirements set forth in SUBMITTALS, equipment produced by other manufacturer's, including the following, may be considered as equal.

a. Car-Mon Products, Inc.
1225 Davis Road
Elgin, IL 60123
Phone: (847) 695-9000
Fax: (847) 695-9078
Website: www.car-mon.com

b. Plymovent Corporation
115 Melrich Road
Cranbury, New Jersey 88512
Phone: (609) 395-3500, (800) 644-0911
Fax: (609) 655-0919
Website: www.plymovent.com

c. Nederman
39115 Warren Road
Westland, MI 48185
Phone: (734) 729-3344, (800) 575-0609
Fax: (734) 729-3358
Website: www.nedermanusa.com

PART 3 - EXECUTION

3.1 INSPECTION

A. Coordinate location of rough-in work and utility stub-outs to assure match with equipment to be installed.

B. Inspect delivered equipment for damage from shipping and exposure to weather.

C. Compare delivered equipment with packing lists and specifications to assure receipt of all items.

3.2 INSTALLATION

A. Perform work under direct supervision of Foreman or Construction Superintendent with authority to coordinate installation of scheduled equipment with CTDOT PM.

B. Install equipment in accordance with plans, shop drawings and manufacturer's instructions:

1. Positioning: Place equipment in accordance with any noted special positioning requirements generally level, plumb and at right angles to adjacent work.

2. Fitting: Where field cutting or trimming is necessary, perform in a neat, accurate, professional manner without damaging equipment or adjacent work.

3. Anchorage: Attach equipment securely to floor, as directed by CTDOT PM, to prevent damage resulting from inadequate fastening. Installation fasteners shall be installed to avoid scratching or damaging adjacent surfaces.

4. Upon completion of work, finish surfaces shall be free of tool marks, scratches, blemishes, and stains.

3.3 TESTING

A. Additional Testing and Balancing (TAB) Requirements: Final Owner Acceptance shall not occur unit after equipment test reports have been received by the Owner and Design Team. In addition to testing and balancing reporting requirements indicated in Section 23 05 93 Testing, Adjusting, and Balancing for HVAC, the following testing procedures shall be required for all equipment items specified herein:

1. At each piece of equipment of all equipment items specified herein, the measure of air velocity measured in feet per minute, static pressure measured in inches of water column, and total airflow volume in cubic feet per minute (CFM), shall be required. These measurements shall be taken at both the terminal inlet (source), as well as the point of equipment connection to the main ductwork, by means of Pitot-tube traverse measurements.

a. For vehicle exhaust reels, these measurements shall be taken once with the exhaust hose fully unwound from the reel, and once with 25% of the exhaust hose unwound from the reel.

B. Demonstration: After final connections are made and prior to authorizing payment, specified equipment shall be demonstrated to be compliant with all specified features in the presence of the CTDOT PM and Owner using acceptance procedures provided by the equipment manufacturer. Additionally, airflow velocity readings at each terminal inlet (source) shall be provided during the demonstration by means of a handheld anemometer, or similar equipment.

3.4 CLEANUP

A. Touch-up damage to painted finishes.

B. Wipe and clean equipment of any oil, grease, and solvents, and make ready for use.

C. Clean area around equipment installation and remove packing or installation debris from job site.

D. Notify CTDOT PM for acceptance inspection.

3.5 TRAINING

A. Direct the technical representative to provide specified hours of training to designated Owner's maintenance personnel in operation and maintenance of the following equipment. Coordinate, with Owner, training schedule and list of personnel to be trained.

1. EXTRACTOR, FUME, WITH EXTENSION ARM
   Equipment Mark Number: 3200
   Hours Required: 1

2. REEL, VEHICLE EXHAUST, MOTOR OPERATED, WITH 8 INCH HOSE
   Equipment Mark Number: 3305
   Hours Required: 1

B. Obtain, from technical representative, a list of Owner's personnel trained in equipment operations and maintenance.

C. Provide a Windows compatible movie file format recording on DVD disk of the training session. The DVD training movie can be of a live session or a produced training video.

END OF SECTION 44 11 37