GENERAL NOTES

SPECIFICATIONS: CONNECTICUT DEPARTMENT OF TRANSPORTATION FORM 816 DATED 2004, SUPPLEMENTAL SPECIFICATIONS DATED JANUARY 2015 AND SPECIAL PROVISIONS.

DESIGN SPECIFICATIONS: AASHTO LRFD BRIDGE DESIGN SPECIFICATIONS FOR HIGHWAY BRIDGES (AASHTO-2012) AND 2013 INTERIM REVISION, AS SUPPLEMENTED BY THE CONNECTICUT DEPARTMENT OF TRANSPORTATION BRIDGE DESIGN MANUAL - 2003 AND 2015 INTERIM REVISION.

ALLOWABLE DESIGN STRESSES:
STRUCTURAL STEEL - AASHTO M270, GRADE 50 T2, BASED ON FY = 50,000 PSI

CLASS "F" CONCRETE: BASED ON F.' = 4,400 PSI
CLASS "S" CONCRETE: BASED ON F.' = 4,000 PSI
CONCRETE FOR LINK-SLAB: BASED ON FC' = 4,500 PSI
REINFORCEMENT - ASTM A615: BASED ON FY = 60,000 PSI

THE SPECIFIED CONCRETE STRENGTH USED IN DESIGN, F.', OF THE CONCRETE COMPONENTS IS NOTED ABOVE. THE MINIMUM COMPRESSIVE STRENGTH OF THE CONCRETE IN THE CONSTRUCTED COMPONENTS SHALL CONFORM TO THE REQUIREMENTS OF 'SECTION 6.01 CONCRETE FOR STRUCTURES'.

LIVE LOAD: HL 93

FUTURE PAVING ALLOWANCE: NONE

STRUCTURAL STEEL: 1
KNOWN QUANTITIES OF STEEL MEMBERS SHALL BE PAID FOR UNDER THE ITEM "STRUCTURAL STEEL (SITE NO. 1)" INCLUDING: NEW STIFFENERS, ANGLES, BOLSTERS, W-SHAPE MEMBERS AND CHANNELS FOR THE PURPOSE OF STRENGTHENING BEAMS AND GIRDERS, REPLACING CROSS FRAME MEMBERS AND LATERAL BRACING. ALSO INCLUDING SOLE PLATES AND MASONRY PLATES, AS APPLICABLE, FOR THE PURPOSE OF REPLACING EXPANSION AND FIXED BEARINGS AS SHOWN ON THE PLANS.

REPAIR PLATES AND ANY ADDITIONAL STEEL REPAIRS THAT REQUIRES FIELD MEASUREMENT SHALL BE PAID FOR UNDER ITEM "STRUCTURAL STEEL". SEE STRUCTURAL STEEL NOTES ON S-40

PAINT: PAINT SHALL CONFORM TO THE REQUIREMENTS OF THE SPECIAL PROVISION "ABRASIVE BLAST CLEANING AND FIELD PAINTING OF STRUCTURE (SITE NO. 1)"
THE COLOR OF THE TOPCOAT MATERIAL ON THE STRUCTURAL STEEL SHALL CONFORM TO FEDERAL STANDARD COLOR NO. 26329 (BLUE)

SITE NO.	BRIDGE NO.	TOWN	ROUTE/LOCATION	FED. STD. COLOR NO.	LEAD PRESENT IN EXIST. COATING
1	00608	LITCHFIELD	ROUTE 8 NB	26329	Y

HOT MIX ASPHALT: SEE THE CROSS SECTION SHEET IN THIS SUBSET

DIMENSIONS: WHEN DECIMAL DIMENSIONS ARE GIVEN TO LESS THAN THREE DECIMAL PLACES, THE OMITTED DIGITS SHALL BE ASSUMED TO BE ZEROS.

EXISTING DIMENSIONS: DIMENSIONS OF THE EXISTING STRUCTURE SHOWN ON THESE PLANS ARE FOR GENERAL REFERENCE ONLY. THEY HAVE BEEN TAKEN FROM THE ORIGINAL DESIGN DRAWINGS AND ARE NOT GUARANTEED. THE CONTRACTOR SHALL TAKE ALL FIELD MEASUREMENTS NECESSARY TO ASSURE PROPER FIT OF THE FINISHED WORK AND SHALL ASSUME FULL RESPONSIBILITY FOR THEIR ACCURACY.

COMPOSITE CONSTRUCTION:
CONSTRUCTION LOADS AND DEAD LOADS (INCLUDING PARAPETS) WILL BE PERMITTED WHEN DIRECTED BY THE ENGINEER BUT ONLY WHEN THE CONCRETE HAS REACHED A STRENGTH OF F.' = 3500 PSI. LIVE LOADS (TRAFFIC) WILL BE PERMITTED ON THE STRUCTURE AFTER THE CONCRETE HAS REACHED A STRENGTH OF F_c'=4400 PSI

CLASS "F" CONCRETE: CLASS "F" CONCRETE SHALL BE USED FOR THE DECK SLAB EXCLUDING THE LINK-SLAB REGIONS, SUPERSTRUCTURE PARAPETS, RECONSTRUCTED WINGWALL PARAPETS, BACKWALL, AND RECONSTRUCTION OF CONCRETE PAVEMENT APPROACH SLABS.

CLASS "S" CONCRETE: CLASS "S" CONCRETE SHALL BE USED FOR REPAIR OF CONCRETE SUBSTRUCTURE (SOUTH AND NORTH ABUTMENTS AND PIERS 1-6).

CONCRETE FOR LINK-SLAB: CONCRETE FOR LINK-SLAB SHALL BE USED FOR THE CONSTRUCTION OF THE LINK-SLAB, AND SUPERSTRUCTURE PARAPETS WITHIN THE LINK-SLAB REGIONS OVER PIERS 1, 2 AND 3.

REMAIN-IN-PLACE FORMS:
THE USE OF REMAIN-IN-PLACE FORMS ON THIS STRUCTURE IS NOT ALLOWED DUE TO WEIGHT RESTRICTIONS.

JOINT SEAL: SEE SPECIAL PROVISIONS

CONSTRUCTION JOINTS: CONSTRUCTION JOINTS OTHER THAN THOSE SHOWN ON THE PLANS WILL NOT BE PERMITTED WITHOUT PRIOR APPROVAL OF THE ENGINEER.

EXPOSED EDGES: EXPOSED EDGES OF CONCRETE SHALL BE BEVELED 1" X 1" UNLESS OTHERWISE NOTED

CONCRETE COVER: ALL REINFORCEMENT SHALL HAVE TWO INCHES COVER UNLESS DIMENSIONED OTHERWISE

REINFORCEMENT: ALL REINFORCEMENT SHALL BE ASTM A615 GRADE 60

REINFORCING BARS: ALL REINFORCEMENT IN THE SUPERSTRUCTURE INCLUDING THE CONCRETE DECK SLAB, THE PARAPETS, AND THE NEW APPROACH SLABS SHALL BE GALVANIZED UNLESS OTHERWISE NOTED.
THESE BARS SHALL BE INCLUDED IN THE PAY ITEM FOR "DEFORMED STEEL BARS-GALVANIZED".
ALL REINFORCEMENT IN THE SUBSTRUCTURE REPAIR AND KEEPER BLOCKS SHALL BE UNCOATED BLACK BAR.

MEMBRANE WATERPROOFING (COLD LIQUID ELASTOMERIC): COLD LIQUID ELASTOMERIC SHALL BE PLACED ON THE BRIDGE DECK AND APPROACH SLABS AFTER THEY HAVE BEEN POURED AND CURED. THE COLD LIQUID ELASTOMERIC SHALL EXTEND 2"± UP THE CURBS.

ANALYSIS OF BRIDGE FOR CONTAINMENT STRUCTURE: SEE NOTES ON THIS SHEET.

SEQUENCE OF OPERATIONS FOR BRIDGE NO. 00608

1. CONSTRUCT CROSS-OVER AND DETOUR ROUTE 8 NB TRAFFIC TO BRIDGE 00609. CLOSE BRIDGE 00608 TO TRAFFIC.

2. REMOVE HMA WEARING SURFACE FROM BRIDGE DECK AND APPROACHES
NOTE: LARGE MILLING EQUIPMENT NOT PERMITTED. SEE SPECIAL PROVISION

3. INSTALL CONTAINMENT PLATFORM/SCAFFOLDING UNDER BRIDGE BUT WITHOUT THE SIDE WALLS FULLY ERECTED TO MINIMIZE WIND LOAD EFFECTS ON THE BRIDGE. NOTE THAT CONTAINMENT WILL STILL BE NECESSARY FOR PAINT AND DEBRIS REMOVAL AND COLLECTION AT THE STEEL REPAIR LOCATIONS. REFER TO SPECIAL PROVISIONS "LOCALIZED PAINT REMOVAL AND FIELD PAINTING OF EXISTING STEEL" AND "LEAD COMPLIANCE FOR MISCELLANEOUS EXTERIOR TASKS". 1

4. REPAIR SUBSTRUCTURE WITH CLASS "S" CONCRETE (SOUTH ABUTMENT, NORTH ABUTMENT AND PIERS 1-6.)

5. REPAIR THE STRUCTURAL STEEL THROUGHOUT:

GIRDER SPANS:

REPLACE THE PREVIOUSLY RETROFITTED SPLICES WITH CONTINUOUS STEEL.
REPLACE THE PIN & HANGERS WITH A BOLTED SPLICE.
REPLACE EXISTING ROCKER BEARINGS IN THE GIRDER SPANS WITH (ROUND) STEEL-LAMINATED ELASTOMERIC BEARINGS AT THE FOLLOWING LOCATIONS:
PIER 4, PIER 6 AND AT THE NORTH ABUTMENT.
INSTALL LATERAL RESTRAINT SYSTEM FOR THE GIRDERS AT PIER 4, PIER 6 AND THE NORTH ABUTMENT.
LEAVE IN FIXED LINE OF BEARINGS AT PIER 5.
DECK TO BE JOINTLESS (EXCEPT AT PIER 4).

ROLLED BEAM SPANS:

REMOVE EXPANSION AND FIXED BEARINGS IN ROLLED BEAM SPANS AND REPLACE THE BEARINGS WITH NEW SOLE PLATES AND ELASTOMERIC BEARINGS.
JACK UP BEAM ENDS AT PIER 4 AND REPLACE BOLSTERS, LATERAL ANGLES, CONCRETE PEDESTALS AND REPLACE THE BEARING WITH ELASTOMERIC BEARINGS.
AT PIER 2, INSTALL A "FIX-FIX"CONDITION, USING ELASTOMERIC PADS WITH SHEAR PINS.
INSTALL LATERAL RESTRAINT SYSTEM FOR THE ROLLED BEAM SPANS AT THE SOUTH ABUTMENT, PIER 1, AND PIER 3.
DECK TO BE JOINTLESS, BY MEANS OF "LINK SLABS"(EXCEPT AT PIER 4)

6. POUR CONCRETE DECK

7. ERECT FULL CONTAINMENT ENCLOSURE

8. CLEAN AND PAINT SUPERSTRUCTURE STEEL BY ABRASIVE BLAST CLEANING METHODS. IF ADDITIONAL DETERIORATED STEEL IS ENCOUNTERED DURING THE BLAST CLEANING OPERATIONS NEW REPLACEMENT STEEL SHALL BE OBTAINED AS REQUIRED TO DO THE REPAIRS. THIS ADDITIONAL STRUCTURAL STEEL SHALL BE DELIVERED WITH THE PRIMER COAT ALREADY APPLIED TO IT. METHOD OF PAYMENT FOR THIS WORK TO BE PAID FOR UNDER ITEM "STRUCTURAL STEEL"

9. UPGRADE GUIDE RAIL SYSTEMS TO MODERN STANDARDS (R-B 350).

10. REMOVAL OF DRAINAGE SYSTEM AND REPLACEMENT WITH FREE FALL SCUPPERS.

11. CONSTRUCT APPROACH SLABS AT BOTH ENDS OF THE BRIDGE.

12. INSTALL SPRAY APPLIED MEMBRANE TO THE CONCRETE DECK TO SEAL TENSION CRACKS AND PROTECT THE DECK AGAINST FUTURE DETERIORATION. THIS WOULD BE FOLLOWED BY PLACEMENT OF 3" HOT MIX ASPHALT.

13. INSTALL EXPANSION JOINT OVER SOUTH ABUTMENT, PIER 4 AND NORTH ABUTMENT.

14. INSTALL APPROACH GUIDE RAIL

15. RESTRIPE ROADWAY (TRAFFIC ITEMS)

16. REOPEN BRIDGE TO TRAFFIC

ANALYSIS OF BRIDGE:

THE BRIDGE NEED NOT BE ANALYZED FOR THE LOAD EFFECTS OF THE CONTAINMENT STRUCTURE ON THE BRIDGE PROVIDED THE FOLLOWING CONDITIONS ARE MET DURING CONSTRUCTION:

1. PRIOR TO ERECTION OF THE CONTAINMENT/SCAFFOLDING STRUCTURE THE EXISTING HMA WEARING SURFACE SHALL BE REMOVED. ALSO, PRIOR TO PLACING THE FINAL HMA OVERLAY, THE CONTAINMENT/SCAFFOLDING STRUCTURE MUST BE REMOVED

2. LIVE LOAD TRAFFIC WILL NOT BE ON THE BRIDGE WHILE THE CONTAINMENT/SCAFFOLDING STRUCTURE IS IN PLACE. EXCLUDED FROM THIS REQUIREMENT ARE SMALL MANLIFTS AND LIGHT DUTY TRUCKS

3. ESTIMATED WEIGHT OF CONTAINMENT SYSTEM DOES NOT EXCEED 75 PSF. VACUUMING OF BLAST DEBRIS SHALL BE DONE IN ACCORDANCE WITH OSHA STANDARDS OR AS OFTEN AS NECESSARY TO MEET THIS REQUIREMENT

4. UNDER NO CIRCUMSTANCES WILL HEAVY MATERIALS OR BLASTING EQUIPMENT BE STORED ON THE BRIDGE. IT SHALL BE STORED OFF OF THE BRIDGE. DEBRIS FROM THE VARIOUS WORK OPERATIONS, FOR EXAMPLE, REMNANTS OF THE REMOVED HMA WEARING SURFACE, SHALL BE REMOVED AS QUICKLY AS POSSIBLE FROM THE STRUCTURE

5. THE CONTAINMENT/SCAFFOLDING STRUCTURE ITSELF MUST BE PROPERLY DESIGNED TO ACCOMODATE ALL ANTICIPATED LOADS THAT WILL BE APPLIED TO IT.

NOTES:

ERECTION OF THE CONTAINMENT PLATFORM/SCAFFOLDING UNDER THE BRIDGE SHALL BE DONE IN ACCORDANCE WITH THE "SEQUENCE OF OPERATIONS" ON THIS SHEET.

ERECTION OF THE FULL CONTAINMENT STRUCTURE COMPONENTS SHALL NOT BE DONE UNTIL THE MAJOR STEEL REPAIRS HAVE BEEN COMPLETED.

ALL DEMOLITION AND CONSTRUCTION OPERATIONS SHALL BE COORDINATED BY THE CONTRACTOR WITH THE NAUGATUCK RAILROAD, AND SHALL BE PERFORMED AS DIRECTED BY THE ENGINEER. SEE SPECIAL PROVISION "PROSECUTION AND PROGRESS" FOR LIMITATION OF CONTRACTOR'S OPERATIONS AND REQUIREMENTS FOR WORK ADJACENT TO OR OVER THE RAILROAD.

THE CONTAINMENT PLATFORM SHALL ALSO BE USED AS SCAFFOLDING DURING THE STEEL REPAIR OPERATIONS, WHICH WILL TAKE PLACE PRIOR TO THE PAINTING. SCAFFOLDING USED FOR THE STEEL REPAIR WORK WILL NOT BE PAID FOR SEPARATELY BUT WILL BE CONSIDERED INCLUDED FOR PAYMENT UNDER ITEM "CLASS 1 CONTAINMENT AND COLLECTION OF SURFACE PREPARATION DEBRIS (SITE NO. 1)".

BOTTOM OF SCAFFOLDING/CONTAINMENT PLATFORM SHALL BE ABOVE THE 100 YEAR FLOOD ELEVATION.

NOTICE TO BRIDGE INSPECTORS

THE DEPARTMENT'S BRIDGE SAFETY PROCEDURES REQUIRE THIS BRIDGE TO BE INSPECTED FOR, BUT NOT LIMITED TO, ALL APPROPRIATE COMPONENTS INDICATED IN THE GOVERNING MANUALS FOR BRIDGE INSPECTION. ATTENTION MUST BE GIVEN TO INSPECTING THE FOLLOWING SPECIAL COMPONENTS AND DETAILS. (THE LISTING OF COMPONENTS FOR SPECIFIC ATTENTION SHALL NOT BE CONSTRUED TO REDUCE THE IMPORTANCE OF INSPECTION OF ANY OTHER COMPONENT OF THE STRUCTURE). THE FREQUENCY OF INSPECTION OF THESE STRUCTURES SHALL BE IN ACCORDANCE WITH THE GOVERNING MANUALS FOR BRIDGE INSPECTION, UNLESS OTHERWISE

COMPONENT OR DETAIL	BRIDGE SHEET REFERENCE
Follow normal inspection procedure	———

THE DESIGN APPEARS TO CONFORM TO APPLICABLE CRITERIA. APPROVAL IS NOT TO BE CONSTRUED TO MEAN THAT ALL ASPECTS OF THE DESIGN HAVE BEEN PERSONALLY CHECKED BY THE UNDERSIGNED.

Rabih M. Barakat P.E.

Digitally signed by Rabih M. Barakat P.E.
DN: CN=Rabih M. Barakat P.E., O=State of Connecticut, E=rabih.barakat@ct.gov, OU=Department of Transportation, OU= Transportation Principal Engineer of Bridge Design, OU=Division of Bridges and Facilities, L=Newington, S=Connecticut, C=US
Date: 2015.06.23 10:49:38-04'00'

TRANSPORTATION PRINCIPAL ENGINEER

ADDENDUM NO. 1

REV.	DATE	REVISION DESCRIPTION	SHEET NO.
1	06/23/2015	REVISED SEQUENCE OF OPERATIONS AND PAYMENTS	-

THE INFORMATION, INCLUDING ESTIMATED QUANTITIES OF WORK, SHOWN ON THESE SHEETS IS BASED ON LIMITED INVESTIGATIONS BY THE STATE AND IS IN NO WAY WARRANTED TO INDICATE THE CONDITIONS OF ACTUAL QUANTITIES OF WORK WHICH WILL BE REQUIRED.

Plotted Date: 6/23/2015

DESIGNER/DRAFTER: SAB
CHECKED BY: JWP
SCALE AS NOTED

STATE OF CONNECTICUT
DEPARTMENT OF TRANSPORTATION

Filename: ...\0073-0182_S-02A_General_Notes.dgn

SIGNATURE/BLOCK: OFFICE OF ENGINEERING
APPROVED BY:

PROJECT TITLE: REHABILITATION OF BRIDGE NO. 00608 ROUTE 8 NB

TOWN: LITCHFIELD/HARWINTON

DRAWING TITLE: GENERAL NOTES

PROJECT NO. 73-182
DRAWING NO. S-02
SHEET NO. 04.02.A1

ELASTOMERIC BEARING NOTES

1. THE ELASTOMERIC BEARINGS ARE DESIGNED USING METHOD A OF THE AASHTO LRFD BRIDGE DESIGN SPECIFICATIONS.
2. THE STEEL FOR THE EXTERNAL LOAD PLATES SHALL CONFORM TO THE REQUIREMENTS OF AASHTO M270, GRADE 50 OR OTHER STEEL WITH YIELD STRENGTH EQUAL TO 50,000 PSI.
3. THE NEW STEEL CONNECTION PLATES, TABS, AND LOAD PLATES SHALL BE SHOP PAINTED USING A ZINC PRIMER PRIOR TO INSTALLATION.
4. WELDING ADJACENT TO THE ELASTOMERIC BEARING SHALL NOT BE PERMITTED. THE CONNECTION PLATE AND/OR TABS SHALL BE CLAMPED IN PLACE BEFORE AND DURING WELDING. THE ELASTOMERIC BEARING WITH LOAD PLATE MAY BE BOLTED INTO POSITION ONLY AFTER THE WELDING HAS COOLED.
5. THE ELASTOMER SHALL BE VIRGIN NEOPRENE (POLYCHLOROPRENE). THE ELASTOMER COMPOUND SHALL BE LOW TEMPERATURE GRADE 3, HAVE A SHORE 'A' DUROMETER HARDNESS OF 50 ± 5 POINTS AND MEET THE REQUIREMENTS OF AASHTO, DIVISION II-CONSTRUCTION (SECTION 18).
6. THE EXPOSED SURFACES OF THE ELASTOMER SHALL NOT BE PAINTED.
7. THE STEEL LAMINAE SHALL CONFORM TO ASTM A570, GRADE 36 OR 40, ASTM A611 GRADE C OR D OR APPROVED EQUAL. ALL LAMINAE SHALL HAVE A $\frac{1}{4}$" (MIN.) SIDE COVER.
8. ALL HIGH STRENGTH BOLTS ($\frac{3}{4}$" DIA.) SHALL CONFORM TO ASTM A325, TYPE 1 (PLAIN). ALL BOLTS SHALL BE CLEAN, FREE OF RUST AND LUBRICATED PRIOR TO INSTALLATION TO ENSURE FREE ROTATION OF THE NUT ON THE BOLT THREADS. THE NUTS SHALL BE HEAVY HEX AND CONFORM TO ASTM A563, PROPERTY CLASS 8S3 OR 10S3 (PLAIN). THE CIRCULAR,HARDENED STEEL WASHERS SHALL CONFORM TO ASTM F436, TYPE 1.
9. THE MAXIMUM DESIGN LOAD (DL + LL WITHOUT IMPACT) FOR EACH BEARING ARE NOTED ON THE BEARING DETAILS. THIS INFORMATION IS PROVIDED FOR THE PROOF LOAD TEST DESCRIBED IN THE SPECIAL PROVISION "BEARING REPLACEMENT WITH ELASTOMERIC BEARING PADS"
10. ALL CONCRETE BEARING PADS SHALL BE MODIFIED TO ACCOMMODATE THE NEW BEARING. ANY VARIATIONS OF THE CONCRETE BEARING PAD THAT EXCEED $\frac{1}{16}$" FROM A LEVEL SURFACE SHALL BE CORRECTED BY SAWCUTTING OR AS ORDERED BY THE ENGINEER. MODIFICATIONS TO CONCRETE BEARING PADS SHALL BE PAID FOR UNDER ITEM "MODIFY CONCRETE BEARING PADS" (1)
11. THE ELASTOMERIC BEARING SHALL BE INSTALLED WHEN THE AMBIENT AIR AND BEARING TEMPERATURES IS BETWEEN 40° F TO 80° F AND HAS BEEN WITHIN THIS RANGE FOR AT LEAST TWO HOURS.
12. STEEL PLATES AND THE BOLTING HARDWARE SHALL BE PAINTED AFTERWARDS AS PART OF THE SUPERSTRUCTURE PAINTING. THE ELASTOMERIC PADS SHALL BE PROTECTED DURING ALL ABRASIVE BLAST CLEANING OPERATIONS. THE PADS SHALL NOT BE PAINTED.
13. EXISTING BRONZE BEARINGS SHALL BE SALVAGED- SEE SPECIAL PROVISION "BEARING REPLACEMENT WITH ELASTOMERIC BEARING PADS".
14. LEAD PAINT SHALL BE REMOVED FROM EXISTING STEEL PRIOR TO WELDING. PAID FOR UNDER ITEM "BEARING REPLACEMENT WITH ELASTOMERIC BEARING PADS".
15. THE CONTRACTOR SHALL RECORD THE GRADE OF THE EXISTING ROLLED BEAMS/GIRDERS (BOTH LONGITUDINALLY AND CROSS SECTIONALLY) TO ACCURATELY FABRICATE THE NEW BEVELED SOLE PLATES IN TWO DIMENSIONS.
16. THE COST OF REMOVING THE EXISTING BEARINGS, AND FURNISHING AND INSTALLING THE ELASTOMERIC BEARINGS, INCLUDING THE LOAD PLATES, SHALL BE PAID FOR UNDER ITEM "BEARING REPLACEMENT WITH ELASTOMERIC BEARING PADS". OTHER STEEL COMPONENTS SUCH AS BOLSTERS AND SOLE PLATES SHALL BE PAID FOR UNDER ITEM NUMBER 0603061 - "STRUCTURAL STEEL (SITE NO. 1)". (1)
17. JACKING OF ROLLED BEAMS/GIRDERS FOR REPLACING BEARINGS SHALL BE PAID FOR UNDER ITEM "JACKING EXISTING BEAMS"
18. REMOVAL OF EXISTING PAINT, SURFACE PREPARATION, AND NEW PAINT: SEE SPECIAL PROVISIONS.
19. THE REMOVAL AND DISPOSAL OF EXISTING BEARING ASSEMBLIES, FURNISHING AND INSTALLING NEW ELASTOMERIC BEARING PADS, AND BEVELED SOLE PLATES TO BE INCLUDED FOR PAYMENT UNDER THE ITEM "BEARING REPLACEMENT WITH ELASTOMERIC BEARING PADS".
20. THE THICKNESS OF THE SOLE PLATE AT ITS THINNEST EDGE SHALL BE $1\frac{1}{2}$". THE ℄ OF SOLE PLATE THICKNESS SHALL BE BASED ON THE EXISTING GRADE OF THE GIRDER AND THE THINNEST EDGE OF THE SOLE PLATE AS INDICATED ON THIS SHEET. THE CONTRACTOR SHALL FIELD VERIFY THE EXISTING GRADE OF EACH GIRDER.
21. THE COMPRESSION IN THE ELASTOMERIC BEARINGS SHALL BE $\frac{1}{8}$". WHEN DETERMINING THE HEIGHT OF THE RECONSTRUCTED BEARING CONCRETE PAD AS INDICATED ON S-14 THRU S-16. THE EXISTING GIRDER ELEVATION SHALL BE MAINTAINED IN THE FINAL CONDITION WHILE CONSIDERING THE COMPRESSION IN THE ELASTOMERIC BEARINGS AND THE SOLE PLATE THICKNESS AS INDICATED ON S-14 THRU S-20. THE EXISTING ELEVATIONS SHALL BE FIELD VERIFIED BY THE CONTRACTOR.

CONCRETE BEARING PADS MODIFICATION NOTES

1. SAWCUT AND REMOVE THE CONCRETE BEARING PADS WITHIN THE LIMITS SHOWN.
2. SEE THE EXISTING PLANS FOR FIXED AND EXPANSION BEARING FOR ADDITIONAL EXISTING DETAILS.
3. THE CONTRACTOR SHALL TAKE ALL PRECAUTIONS TO AVOID DAMAGING THE PIER CAPS AND TOP OF ABUTMENT AROUND THE CONCRETE REMOVAL.
4. CONCRETE SHALL BE 4000 PSI CONTRACTOR DESIGN MIX WITH MAXIMUM $\frac{3}{8}$" SIZE AGGREGATE REFER TO SPECIAL PROVISION FOR "MODIFY CONCRETE BEARING PAD".
5. MAXIMUM 15.5 POUND PNEUMATIC HAMMER TO BE USE FOR THE CONCRETE BEARING PADS REMOVAL.
6. THE COST OF SAWCUTTING, ROUGHENING AND PLACING CONCRETE, CONCRETE REMOVAL, FORMING AND PLACING CONCRETE SHALL BE INCLUDED FOR PAYMENT UNDER ITEM "MODIFY CONCRETE BEARING PAD".

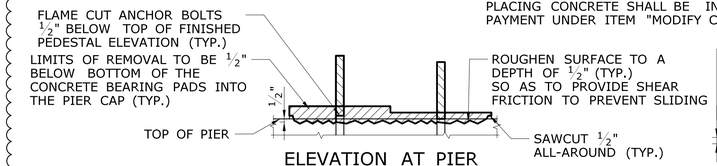

ELEVATION AT PIER

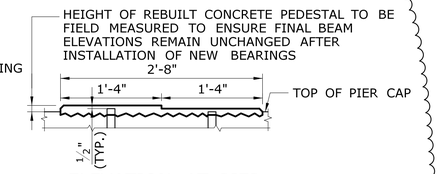

ELEVATION AT PIER

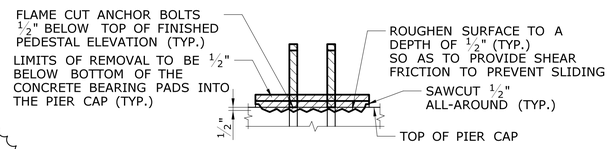

SECTION AT PIER

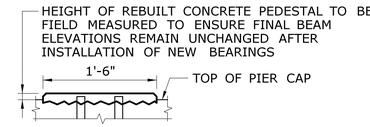

SECTION AT PIER

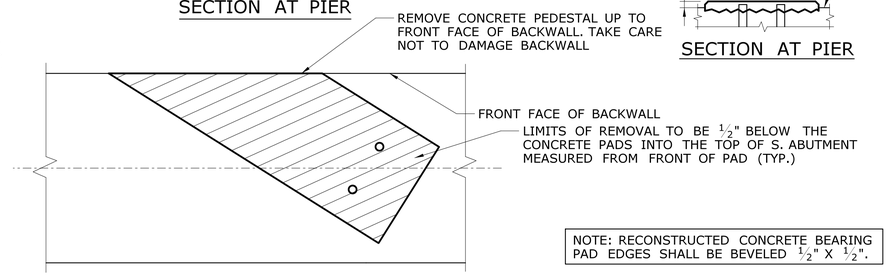

PARTIAL PLAN AT SOUTH ABUTMENT

NOTE: RECONSTRUCTED CONCRETE BEARING PAD EDGES SHALL BE BEVELED ½" X ½". (1)

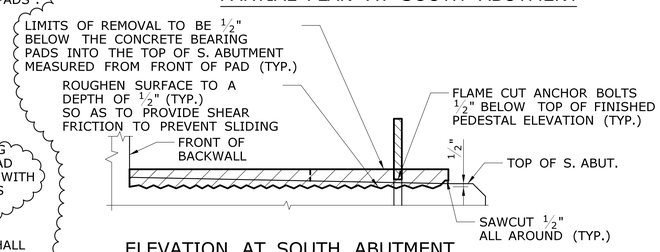

ELEVATION AT SOUTH ABUTMENT

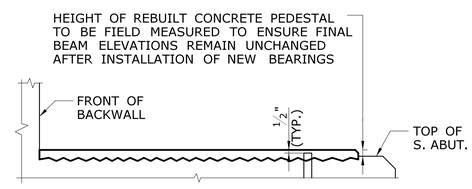

ELEVATION AT SOUTH ABUTMENT

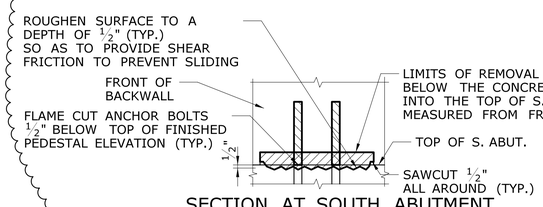

SECTION AT SOUTH ABUTMENT

REMOVAL OF EXISTING CONCRETE PEDESTAL

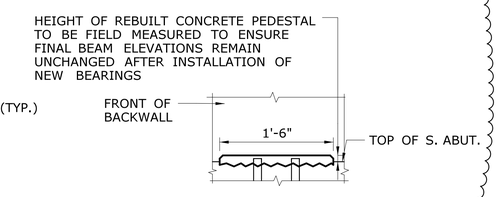

SECTION AT SOUTH ABUTMENT

REBUILT CONCRETE PEDESTAL

MODIFICATION OF CONCRETE PEDESTAL

SCALE: 1" = 1'-0"

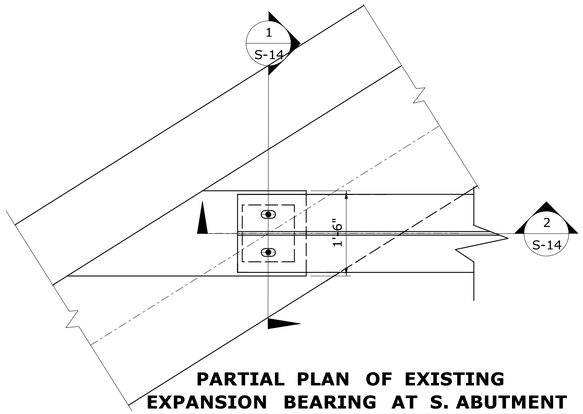

PARTIAL PLAN OF EXISTING EXPANSION BEARING AT S. ABUTMENT

SCALE: $\frac{3}{4}$" = 1'-0"

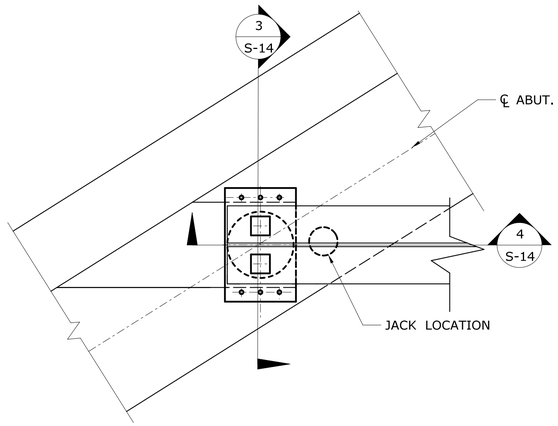

PARTIAL PLAN OF PROPOSED EXPANSION BEARING AT S. ABUTMENT

SCALE: $\frac{3}{4}$" = 1'-0"

CONCRETE KEEPER BLOCK NOTES

1. THE CONCRETE KEEPER BLOCK SHALL BE CONSTRUCTED OF A CONTRACTOR DESIGN MIX THAT ACHIEVES A MINIMUM STRENGTH OF 4000 PSI.
2. ALL REINFORCEMENT SHALL HAVE A 2" (MIN.) COVER.
3. THE STEEL KEEPER PLATES SHALL CONFORM TO ASTM A572 GRADE 50. THE KEEPER PLATE ASSEMBLY (PLATE AND STUDS) SHALL BE HOT DIP GALVANIZED AFTER FABRICATION IN ACCORDANCE WITH ASTM A123.
4. THE CONCRETE KEEPER BLOCK SHALL BE CONSTRUCTED AFTER THE ELASTOMERIC BEARINGS ADJACENT TO THE BLOCK HAVE BEEN INSTALLED.
5. WHEN DRILLING HOLES IN THE PIER CAP, THE CONTRACTOR SHALL AVOID ALL EXISTING REINFORCEMENT. A PACHOMETER SHALL BE USED TO LOCATE EXISTING REINFORCEMENT. THE HOLE DIAMETER SHALL BE AS RECOMMENDED BY THE MANUFACTURER OF THE CHEMICAL ANCHORING MATERIAL FOR THE SIZE OF REINFORCING BAR SPECIFIED.
6. PRIOR TO PLACING THE CONCRETE, THE EXISTING CONCRETE SURFACES AND REINFORCEMENT SHALL BE CLEANED AND FREE OF DIRT, DUST, LOOSE RUST AND OTHER FOREIGN MATTER. THE ROUGHENED AND CLEANED CONCRETE SURFACES SHALL BE DAMPENED WITH WATER JUST PRIOR TO PLACING THE CONCRETE. ANY STANDING WATER SHALL BE REMOVED.
7. THE COST OF CONSTRUCTING THE CONCRETE KEEPER BLOCKS, INCLUDING THE CONCRETE, REINFORCING, DRILLING AND GROUTING, AND THE STEEL KEEPER PLATES WITH WELDED STUDS, SHALL BE PAID FOR UNDER ITEM "CONSTRUCT CONCRETE KEEPER BLOCKS".

ADDENDUM NO. 1

REV.	DATE	REVISION DESCRIPTION	SHEET NO.
1	06/23/2015	ADDED PAYMENT INFORMATION AND PAD RECONSTRUCTION	-

THE INFORMATION, INCLUDING ESTIMATED QUANTITIES OF WORK, SHOWN ON THESE SHEETS IS BASED ON LIMITED INVESTIGATIONS BY THE STATE AND IS IN NO WAY WARRANTED TO INDICATE THE CONDITIONS OF ACTUAL QUANTITIES OF WORK WHICH WILL BE REQUIRED.

Plotted Date: 6/23/2015

DESIGNER/DRAFTER: SAB
CHECKED BY: JWP
SCALE AS NOTED

STATE OF CONNECTICUT
DEPARTMENT OF TRANSPORTATION

Filename: ...\0073-0182_S-13A_Bearing_Notes.dgn

SIGNATURE/BLOCK: OFFICE OF ENGINEERING
APPROVED BY:

PROJECT TITLE: REHABILITATION OF BRIDGE NO. 00608 ROUTE 8 NB

TOWN: LITCHFIELD/HARWINTON

DRAWING TITLE: BEARING NOTES

PROJECT NO. 73-182
DRAWING NO. S-13
SHEET NO. 04.13.A1

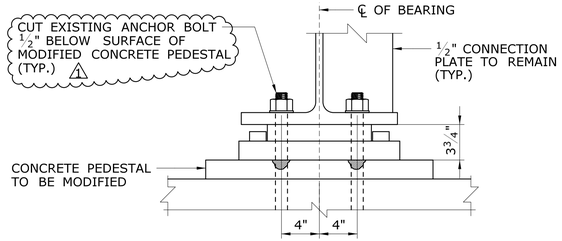

EXISTING FIXED BEARING SECTION 1/-

SCALE: 1½" = 1'-0"

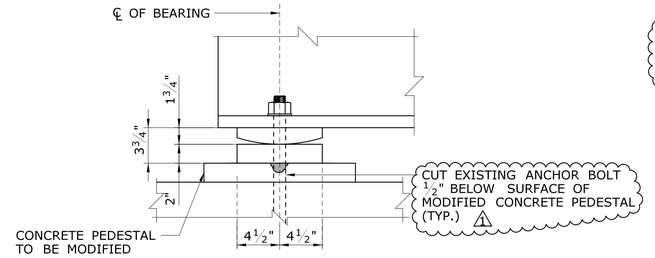

EXISTING FIXED BEARING ELEVATION 2/-

SCALE: 1½" = 1'-0"

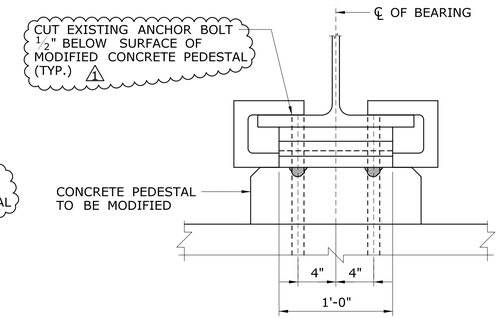

EXISTING EXPANSION BEARING SECTION 1/-

SCALE: 1½" = 1'-0"

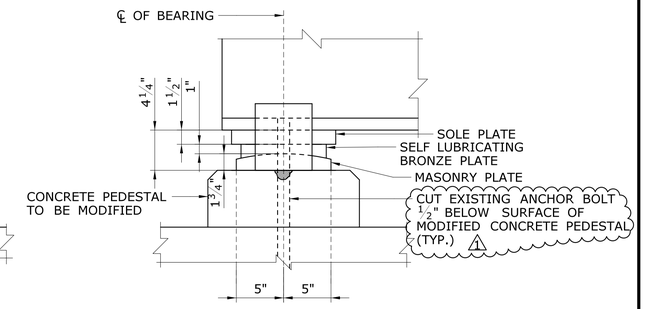

EXISTING EXPANSION BEARING ELEVATION 2/-

SCALE: 1½" = 1'-0"

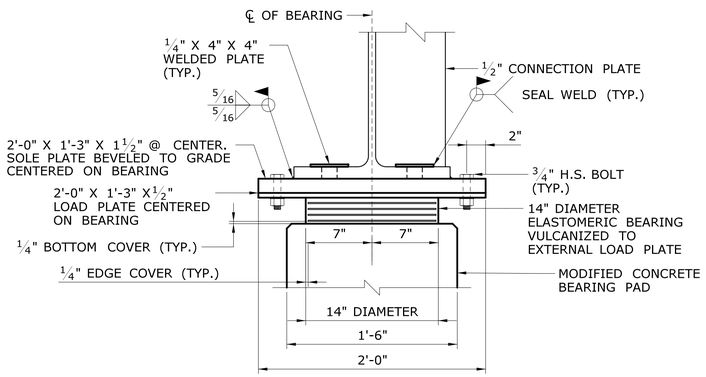

NEW EXPANSION BEARING SECTION 3/-

SCALE: 1½" = 1'-0"

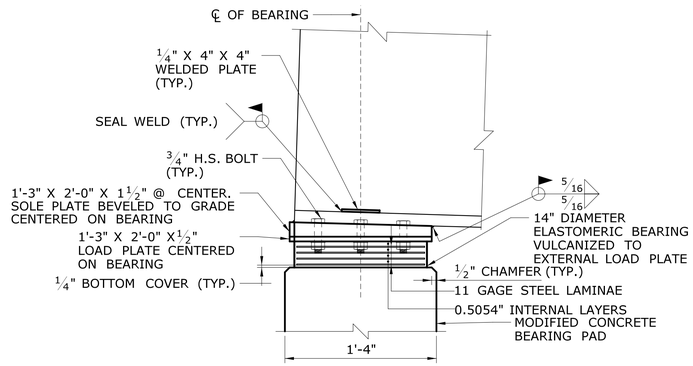

NEW EXPANSION BEARING ELEVATION 4/-

SCALE: 1½" = 1'-0"

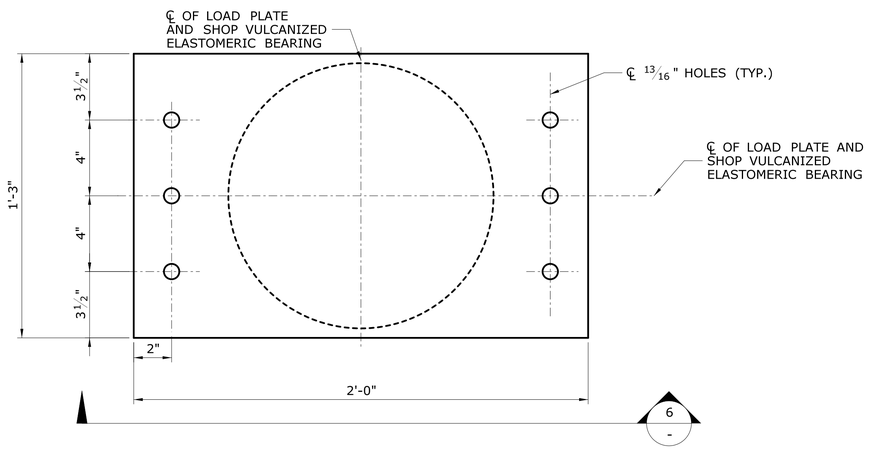

PLAN VIEW OF NEW BEARING

SCALE: 3" = 1'-0"

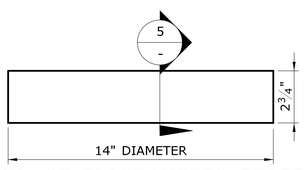

VIEW OF ELASTOMERIC BEARING

SCALE: 3" = 1'-0"

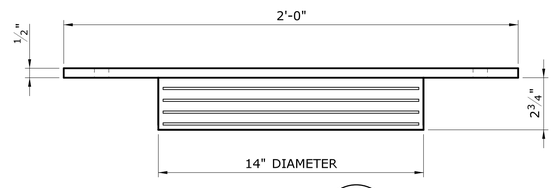

SECTION 6/-

SCALE: 3" = 1'-0"

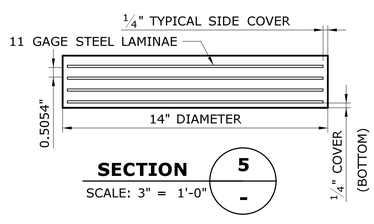

SECTION 5/-

SCALE: 3" = 1'-0"

EXPANSION BEARING NOTES

THE STEEL-LAMINATED ELASTOMERIC BEARING SHALL BE FABRICATED AS FOLLOWS:

1- 0.2500"	COVER LAYER OF ELASTOMER	= 0.250"
4- 0.5054"	INTERNAL ELASTOMER LAYERS	= 2.0216"
4- 0.1196"	11 GAGE STEEL LAMINAE	= 0.4784"
TOTAL BEARING PAD THICKNESS		= 2.75"

BEARING DESIGN LOADS

DEAD LOAD 59.44 KIPS
LIVE LOAD 78.05 KIPS
TOTAL LOAD 137.49 KIPS

ROLLED BEAMS BEARING NOTES AT SOUTH ABUTMENT, PIER 1 & PIER 3:

1. THE EXISTING ELEVATION OF THE BOTTOM FLANGE SHALL BE MAINTAINED THROUGHOUT THE BRIDGE.
2. THE ELEVATIONS FOR THE TOP OF CONCRETE PEDESTALS TO BE MODIFIED TO ACCOMMODATE THE NEW BEARING HEIGHT. ANY VARIATIONS OF THE CONCRETE BEARING PAD THAT EXCEED 1/16" FROM A LEVEL SURFACE SHALL BE CORRECTED BY GRINDING OR AS ORDERED BY THE ENGINEER.
3. THE EXISTING FIXED BEARING TOTAL HEIGHT = 3.75" & THE EXISTING EXPANSION BEARING TOTAL HEIGHT = 4.25" WHILE THE PROPOSED BEARING TOTAL HEIGHT = 4.75"
4. REFER TO S-13 FOR CONCRETE PAD MODIFICATION 1

ADDENDUM NO. 1

REV.	DATE	REVISION DESCRIPTION	SHEET NO.
1	06/23/2015	REVISED CALLOUTS AND ADDED NOTES	-

THE INFORMATION, INCLUDING ESTIMATED QUANTITIES OF WORK, SHOWN ON THESE SHEETS IS BASED ON LIMITED INVESTIGATIONS BY THE STATE AND IS IN NO WAY WARRANTED TO INDICATE THE CONDITIONS OF ACTUAL QUANTITIES OF WORK WHICH WILL BE REQUIRED.

Plotted Date: 6/23/2015

DESIGNER/DRAFTER: SAB
CHECKED BY: JWP
SCALE AS NOTED

STATE OF CONNECTICUT
DEPARTMENT OF TRANSPORTATION

Filename: ...\0073-0182_S-14A_Rolled_Beam_ExpBrg_S.Abut_Pier1+3.dgn

SIGNATURE/BLOCK: OFFICE OF ENGINEERING
APPROVED BY:

PROJECT TITLE: REHABILITATION OF BRIDGE NO. 00608 ROUTE 8 NB

TOWN: LITCHFIELD/HARWINTON

DRAWING TITLE: EXPANSION BEARING DETAIL S. ABUT AND PIERS 1 & 3

PROJECT NO. 73-182
DRAWING NO. S-14
SHEET NO. 04.14.A1

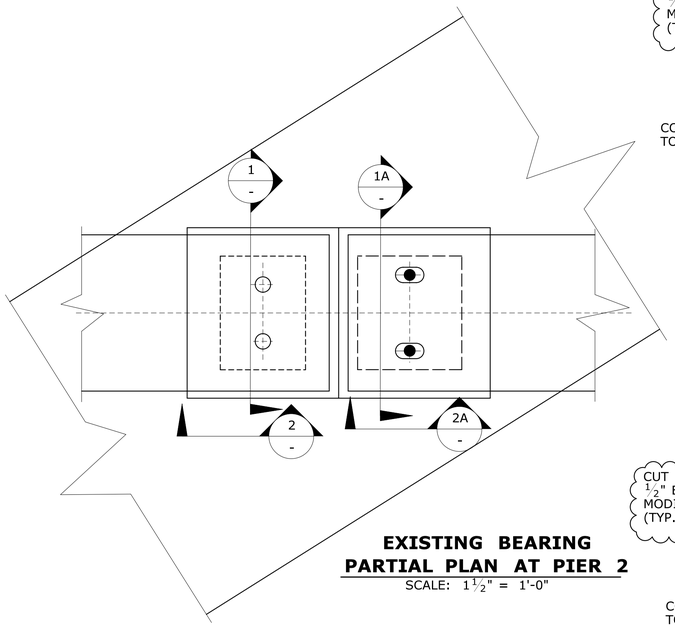

EXISTING BEARING PARTIAL PLAN AT PIER 2
SCALE: 1½" = 1'-0"

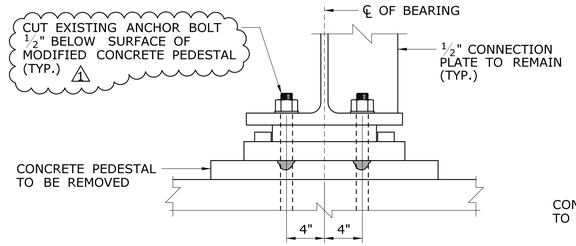

EXISTING FIXED BEARING SECTION 1 / -
SCALE: 1½" = 1'-0"

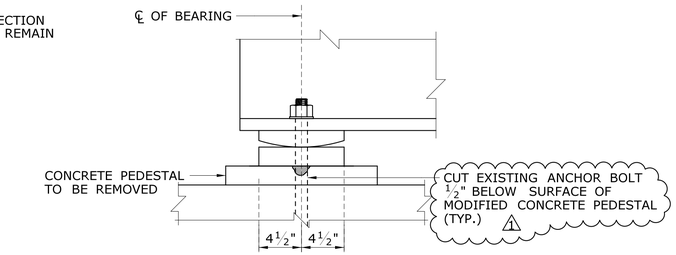

EXISTING FIXED BEARING ELEVATION 2 / -
SCALE: 1½" = 1'-0"

PROCESS OF INSTALLING PROPOSED FIXED BEARING

1. JACK EXISTING ROLLED BEAM SECTIONS
2. REMOVE EXISTING BEARING
3. REMOVE EXISTING BEARING PAD
4. SAW CUT EXISTING ANCHOR BOLTS
5. DRILL AND GROUT 12" FOR 14" ASTM A193 B8M CLASS 2 ANCHOR BOLTS
6. THE CONCRETE SURFACE ON WHICH THE BEARING WILL BE PLACED SHALL BE CLEANED OF DIRT, GREASE, OIL, OR ANY OTHER FOREIGN MATERIAL
7. PLACE ELASTOMERIC BEARING ONTO CONCRETE PIER
8. INSTALL LOAD PLATE WITH WELDED SHEAR BLOCKS, LINING UP WITH ANCHOR BOLTS

FIXED BEARING NOTES

THE STEEL-LAMINATED ELASTOMERIC BEARING SHALL BE FABRICATED AS FOLLOWS:

1- 0.2500"	COVER LAYER OF ELASTOMER =	0.250"
4- 0.5054"	INTERNAL ELASTOMER LAYERS=	2.0216"
4- 0.1196"	11 GAGE STEEL LAMINAE =	0.4784"
TOTAL BEARING PAD THICKNESS	=	2.75"

BEARING DESIGN LOADS

DEAD LOAD 59.44 KIPS
LIVE LOAD 78.05 KIPS
TOTAL LOAD 137.49 KIPS

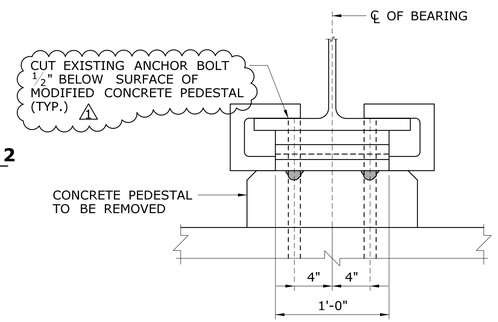

EXISTING EXPANSION BEARING SECTION 1A / -
SCALE: 1½" = 1'-0"

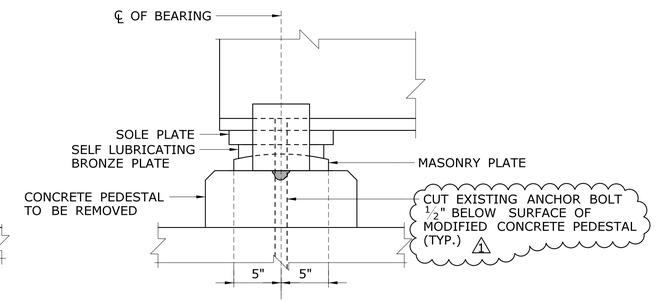

EXISTING EXPANSION BEARING ELEVATION 2A / -
SCALE: 1½" = 1'-0"

ROLLED BEAMS BEARING NOTES AT PIER 2:

1. THE EXISTING ELEVATION OF THE BOTTOM FLANGE SHALL BE MAINTAINED THROUGHOUT THE BRIDGE.
2. THE ELEVATIONS FOR THE TOP OF CONCRETE PEDESTALS TO BE MODIFIED TO ACCOMMODATE THE NEW BEARING HEIGHT. ANY VARIATIONS OF THE CONCRETE BEARING PAD THAT EXCEED 1/16" FROM A LEVEL SURFACE SHALL BE CORRECTED BY GRINDING OR AS ORDERED BY THE ENGINEER.
3. THE EXISTING FIXED BEARING TOTAL HEIGHT = 3.75" & THE EXISTING EXPANSION BEARING TOTAL HEIGHT = 4.25" WHILE THE PROPOSED BEARING TOTAL HEIGHT = 4.75"
4. REFER TO S-13 FOR CONCRETE PAD MODIFICATION 1

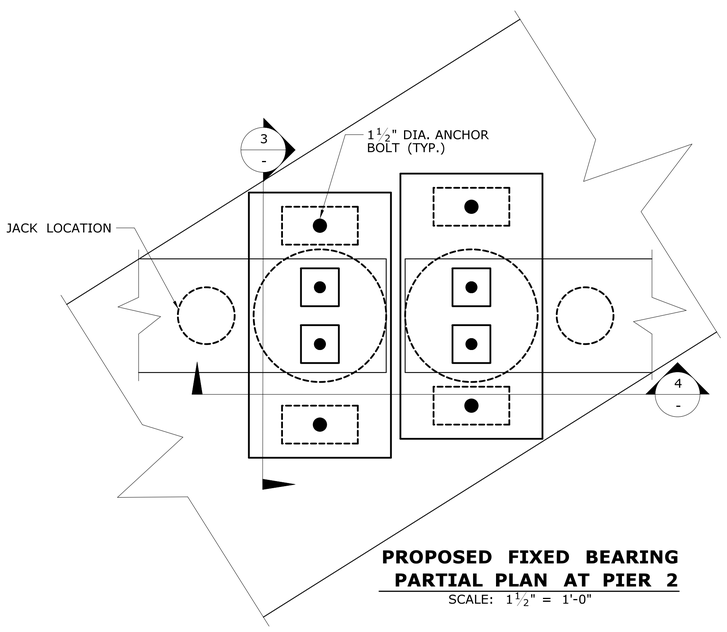

PROPOSED FIXED BEARING PARTIAL PLAN AT PIER 2
SCALE: 1½" = 1'-0"

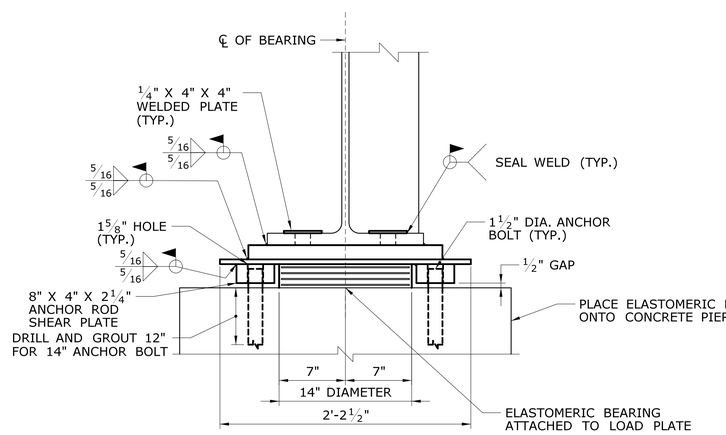

PROPOSED FIXED BEARING SECTION 3 / -
SCALE: 1½" = 1'-0"

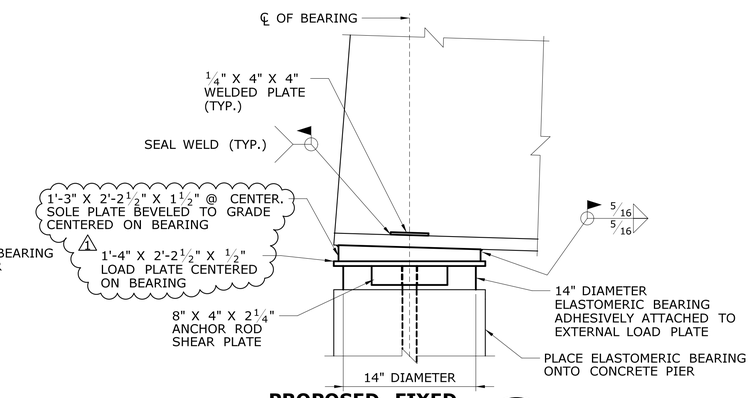

PROPOSED FIXED BEARING ELEVATION 4 / -
SCALE: 1½" = 1'-0"

ADDENDUM NO. 1

REV.	DATE	REVISION DESCRIPTION	SHEET NO.
1	06/23/2015	REVISED PLATE THICKNESSES, NOTES AND CALLOUTS	-

THE INFORMATION, INCLUDING ESTIMATED QUANTITIES OF WORK, SHOWN ON THESE SHEETS IS BASED ON LIMITED INVESTIGATIONS BY THE STATE AND IS IN NO WAY WARRANTED TO INDICATE THE CONDITIONS OF ACTUAL QUANTITIES OF WORK WHICH WILL BE REQUIRED.

Plotted Date: 6/23/2015

DESIGNER/DRAFTER: SAB
CHECKED BY: JWP
SCALE AS NOTED

STATE OF CONNECTICUT
DEPARTMENT OF TRANSPORTATION

Filename: ...\0073-0182_S-15A_Pier2_Fixed_Brg.dgn

SIGNATURE/BLOCK:
OFFICE OF ENGINEERING
APPROVED BY:

PROJECT TITLE:
REHABILITATION OF BRIDGE NO. 00608 ROUTE 8 NB

TOWN: LITCHFIELD/HARWINTON

DRAWING TITLE: FIXED BEARING DETAIL AT PIER 2

PROJECT NO. 73-182
DRAWING NO. S-15
SHEET NO. 04.15.A1

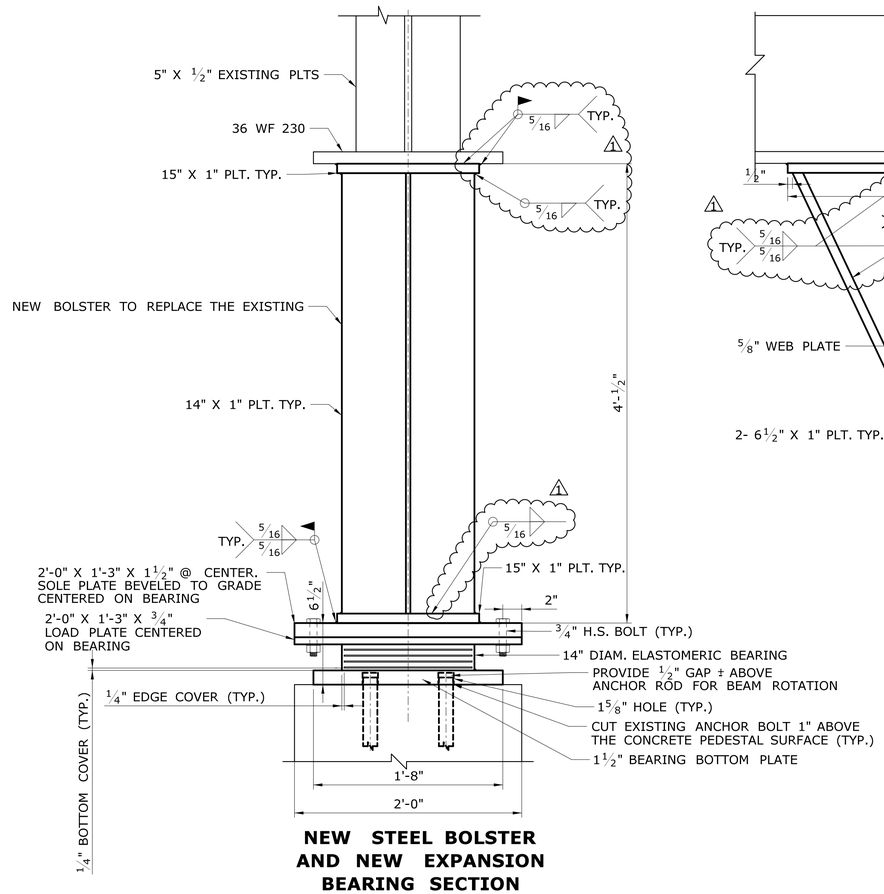

NEW STEEL BOLSTER AND NEW EXPANSION BEARING SECTION

SCALE: 1 1/2" = 1'-0"

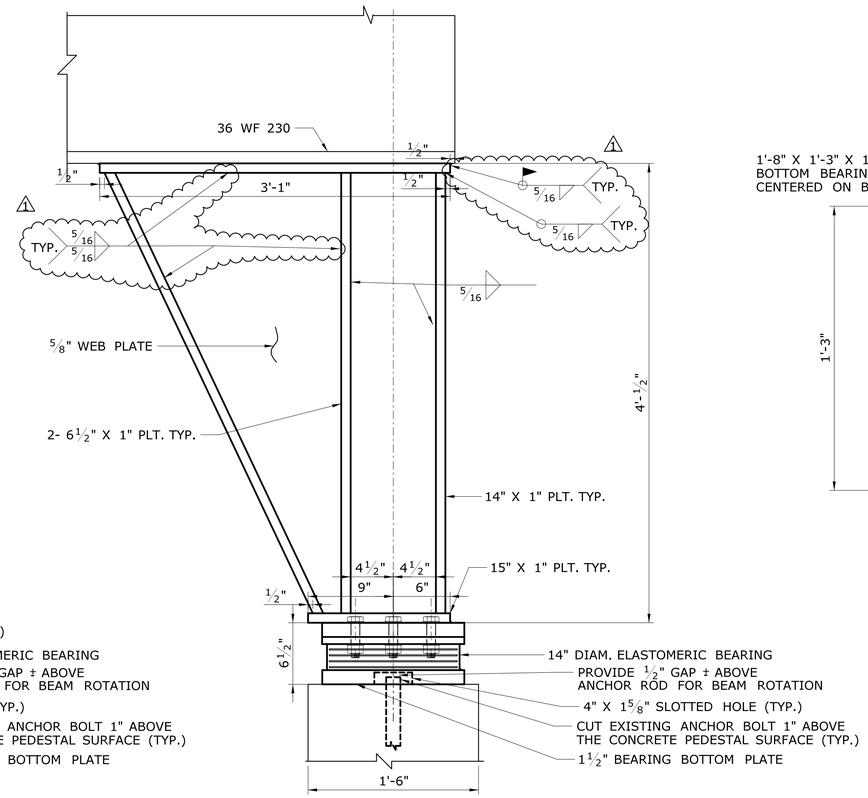

NEW STEEL BOLSTER AND NEW EXPANSION BEARING ELEVATION

SCALE: 1 1/2" = 1'-0"

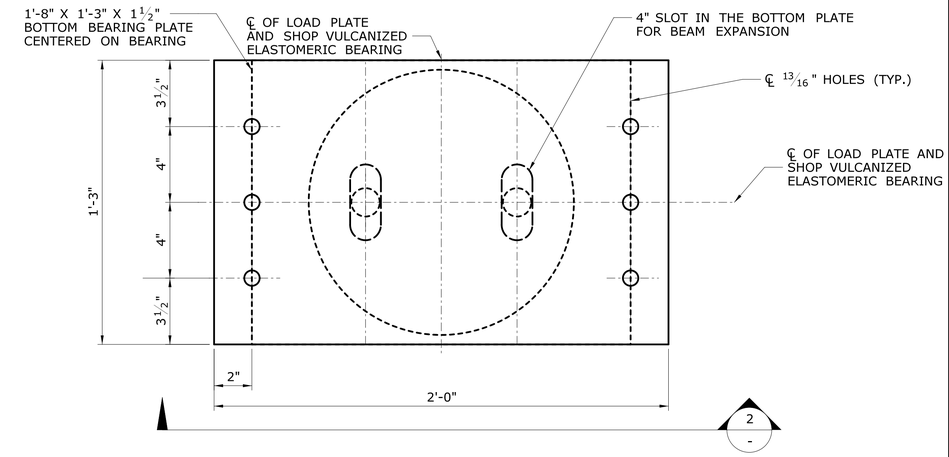

PLAN VIEW OF NEW BEARING

SCALE: 3" = 1'-0"

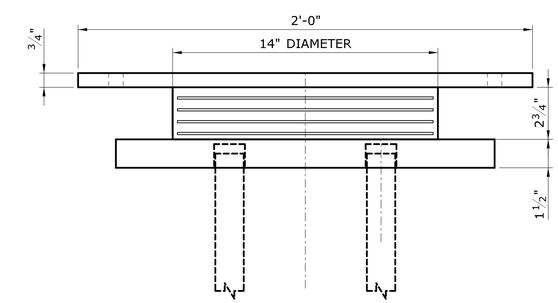

SECTION 2 -

SCALE: 3" = 1'-0"

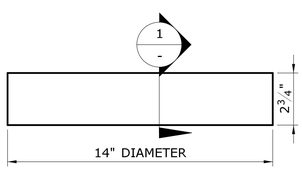

VIEW OF ELASTOMERIC BEARING

SCALE: 3" = 1'-0"

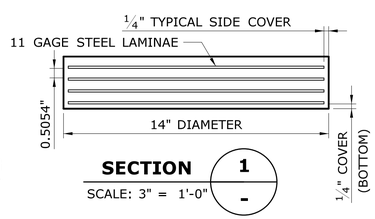

SECTION 1 -

SCALE: 3" = 1'-0"

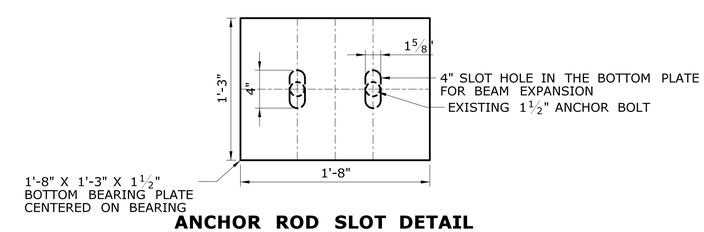

ANCHOR ROD SLOT DETAIL

SCALE: 1 1/2" = 1'-0"

EXPANSION BEARING NOTES

THE STEEL-LAMINATED ELASTOMERIC BEARING SHALL BE FABRICATED AS FOLLOWS:

1- 0.2500"	COVER LAYER OF ELASTOMER	= 0.250"
4- 0.5054"	INTERNAL ELASTOMER LAYERS	= 2.0216"
4- 0.1196"	11 GAGE STEEL LAMINAE	= 0.4784"
TOTAL BEARING PAD THICKNESS		= 2.75"

BEARING DESIGN LOADS

DEAD LOAD 59.72 KIPS
LIVE LOAD 70.26 KIPS
TOTAL LOAD 129.98 KIPS

ROLLED BEAMS BEARING NOTES AT PIER 4:

1. THE EXISTING ELEVATION OF THE BOTTOM FLANGE SHALL BE MAINTAINED THROUGHOUT THE BRIDGE.
2. THE ELEVATIONS FOR THE TOP OF CONCRETE PEDESTAL TO BE MODIFIED TO ACCOMMODATE THE NEW BEARING HEIGHT. ANY VARIATIONS OF THE CONCRETE BEARING PAD THAT EXCEED 1/16" FROM A LEVEL SURFACE SHALL BE CORRECTED BY GRINDING OR AS ORDERED BY THE ENGINEER.
3. THE EXISTING FIXED BEARING TOTAL HEIGHT = 3.75" & WHILE THE PROPOSED BEARING TOTAL HEIGHT = 6.5"
4. REPLACE ALL EXISTING BOLSTERS AND LATERAL ANGLES AT PIER 4. FOR LATERAL ANGLE REPLACEMENT SEE S-43.

ADDENDUM NO. 1

REV.	DATE	REVISION DESCRIPTION	SHEET NO.
1	06/23/2015	REMOVED FIELD WELDS	-

THE INFORMATION, INCLUDING ESTIMATED QUANTITIES OF WORK, SHOWN ON THESE SHEETS IS BASED ON LIMITED INVESTIGATIONS BY THE STATE AND IS IN NO WAY WARRANTED TO INDICATE THE CONDITIONS OF ACTUAL QUANTITIES OF WORK WHICH WILL BE REQUIRED.

Plotted Date: 6/23/2015

DESIGNER/DRAFTER: SAB
CHECKED BY: JWP
SCALE AS NOTED

STATE OF CONNECTICUT
DEPARTMENT OF TRANSPORTATION

Filename: ...\0073-0182_S-16A_Pier_4_Bolster+Brg.dgn

SIGNATURE/BLOCK: OFFICE OF ENGINEERING
APPROVED BY:

PROJECT TITLE: REHABILITATION OF BRIDGE NO. 00608 ROUTE 8 NB

TOWN: LITCHFIELD/HARWINTON

DRAWING TITLE: BOLSTER AND EXPANSION BEARING DETAIL AT PIER 4

PROJECT NO. 73-182
DRAWING NO. S-16
SHEET NO. 04.16.A1

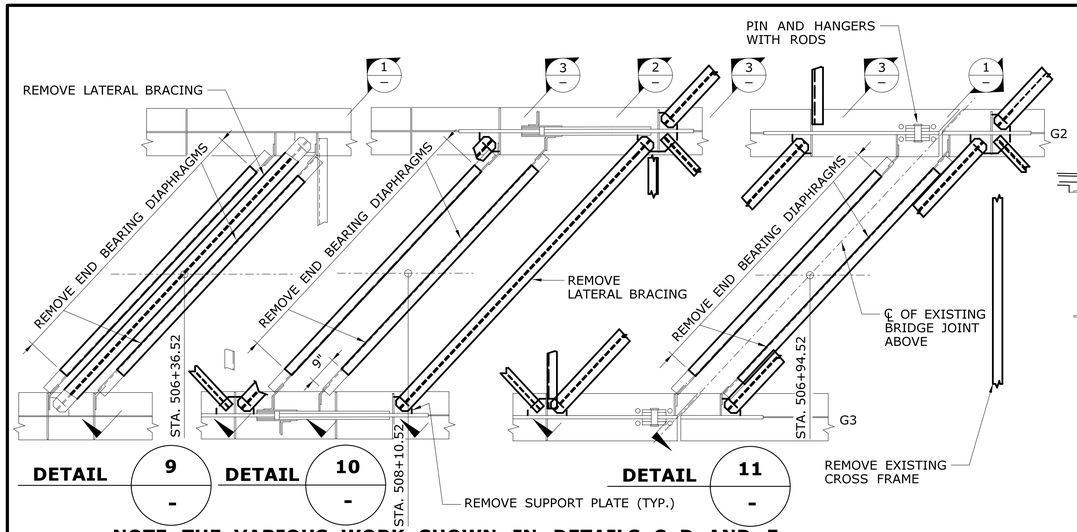

DETAIL 9 - **DETAIL 10 -** **DETAIL 11 -**

NOTE: THE VARIOUS WORK SHOWN IN DETAILS C, D, AND E SHALL BE DONE IN THE MIDDLE BAY PRIOR TO SLAB DEMOLITION

SCALE: 3/8" = 1'-0"

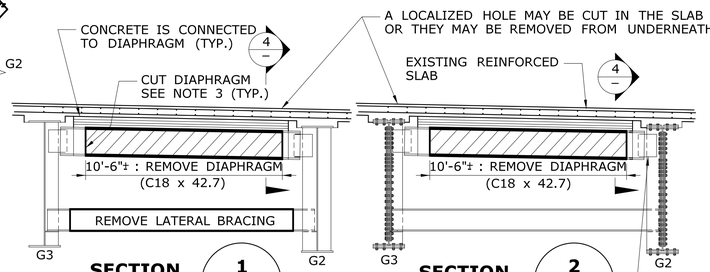

SECTION 1 -
SCALE: 1/4" = 1'-0"

SECTION 2 -
SCALE: 1/4" = 1'-0"

WHERE INDICATED ON S-24 AND S-26 ARC GOUGE OUT THE WELDS BETWEEN THE BENT PLATE AND THE CONNECTION PLATE AND GRIND THE CONNECTION PLATE SMOOTH

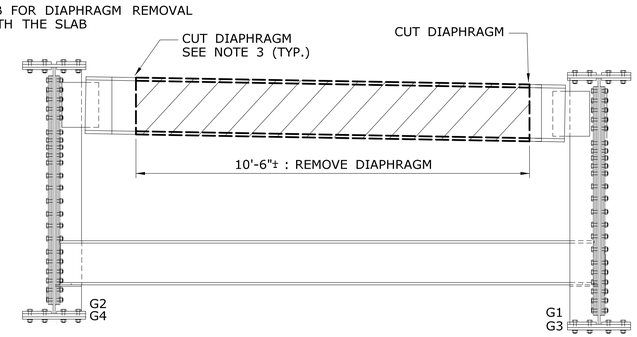

REMOVAL OF END BEARING DIAPHRAGMS IN THE OUTER BAYS (AFTER SLAB DEMOLITION) **SECTION 14 -**

SCALE: 1/2" = 1'-0"

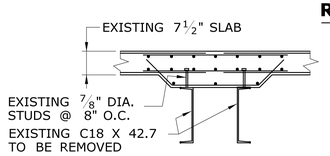

SECTION 4 -
SCALE: 1/2" = 1'-0"

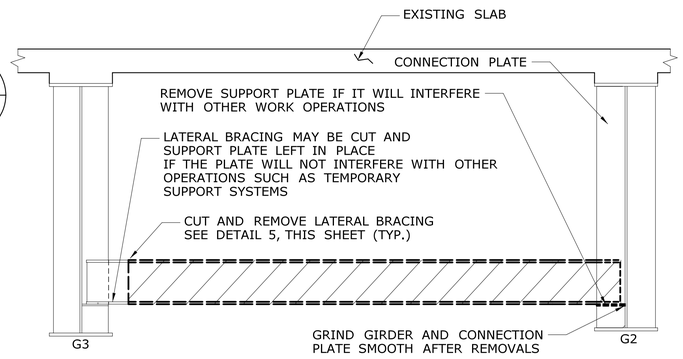

REMOVAL OF LATERAL BRACING PRIOR TO SLAB DEMOLITION (IN THE MIDDLE BAY) SECTION 3 -

SCALE: 1/2" = 1'-0"

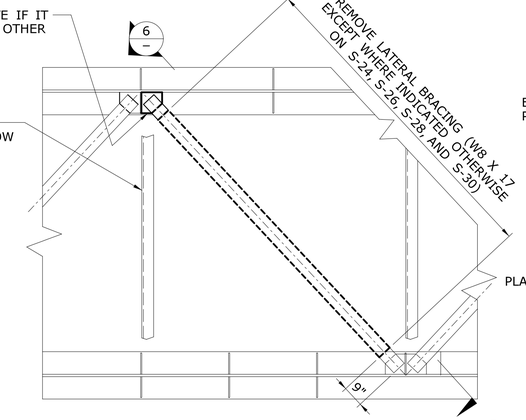

REMOVAL OF LATERAL BRACING DETAIL 12 -

SCALE: 3/8" = 1'-0"

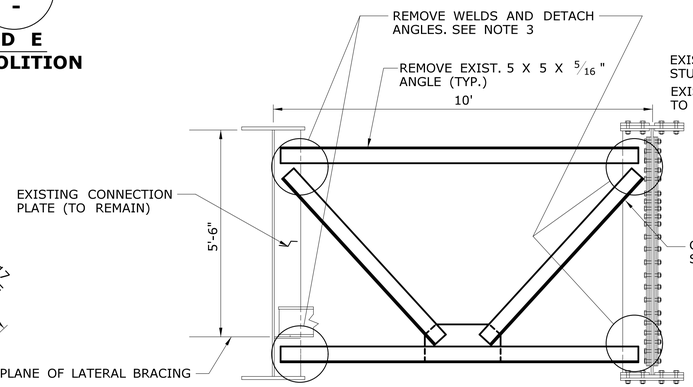

REMOVAL OF CROSS FRAMES

SECTION 15 -
SCALE: 1/2" = 1'-0"

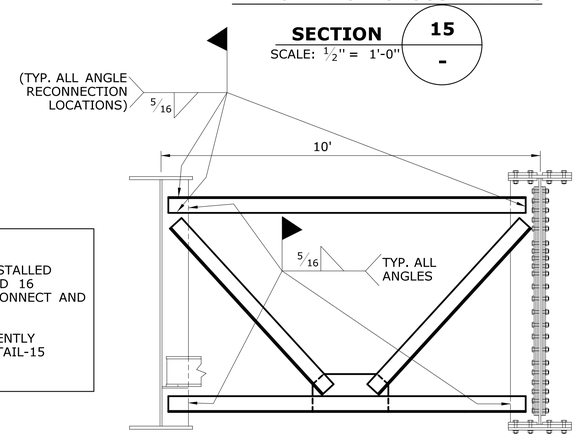

REINSTALLATION OF CROSS FRAMES

SECTION 16 -
SCALE: 1/2" = 1'-0"

NOTES

1) THE COST OF REMOVING OF EXISTING LATERAL BRACING, SUPPORT PLATES, AND END BEARING DIAPHRAGMS SHALL BE PAID FOR UNDER ITEM "REMOVAL OF EXISTING STRUCTURAL STEEL"

2) THE COST OF DISCONNECTING AND RECONNECTING END BEARING DIAPHRAGMS AND LATERAL BRACING SHALL BE PAID FOR UNDER ITEM "DISCONNECT AND RECONNECT EXISTING DIAPHRAGMS"

3) THE COST OF REMOVING LEAD BASED PAINT PRIOR TO ARC GOUGING, FLAME CUTTING, OR WELDING SHALL BE PAID FOR UNDER THE ITEM "LOCALIZED PAINT REMOVAL AND FIELD PAINTING OF EXISTING STEEL". △1

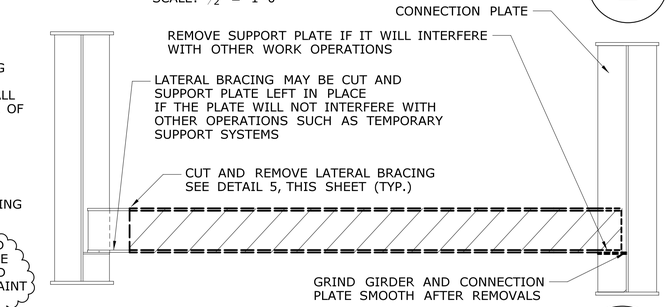

TYPICAL REMOVAL OF LATERAL BRACING SECTION 6 -

SCALE: 1/2" = 1'-0"

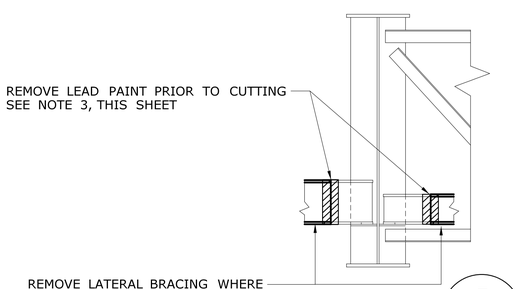

DETAIL 5 -
SCALE: 1/2" = 1'-0"

PAYMENT NOTE:

WHEN CROSS FRAMES ARE TO BE REINSTALLED THE WORK INDICATED IN DETAIL-15 AND 16 SHALL BE PAID FOR UNDER ITEM "DISCONNECT AND RECONNECT EXISTING CROSS FRAMES"

WHEN CROSS FRAMES WILL BE PERMANENTLY REMOVED, THE WORK INDICATED IN DETAIL-15 SHALL BE PAID FOR UNDER ITEM "REMOVAL OF EXISTING STEEL"

ADDENDUM NO. 1

REV.	DATE	REVISION DESCRIPTION	SHEET NO.
△1	06/23/2015	REVISED PAYMENT	-

THE INFORMATION, INCLUDING ESTIMATED QUANTITIES OF WORK, SHOWN ON THESE SHEETS IS BASED ON LIMITED INVESTIGATIONS BY THE STATE AND IS IN NO WAY WARRANTED TO INDICATE THE CONDITIONS OF ACTUAL QUANTITIES OF WORK WHICH WILL BE REQUIRED.

Plotted Date: 6/23/2015

DESIGNER/DRAFTER: RDD/JWP
CHECKED BY: SAB
SCALE AS NOTED

STATE OF CONNECTICUT
DEPARTMENT OF TRANSPORTATION

Filename: ...\0073-0182_S-41A_DisconnectCrossFr.dgn

SIGNATURE/BLOCK: OFFICE OF ENGINEERING
APPROVED BY:

PROJECT TITLE: REHABILITATION OF BRIDGE NO. 00608 ROUTE 8 NB

TOWN: LITCHFIELD/HARWINTON

DRAWING TITLE: DISCONNECTION OF CROSS FRAMING

PROJECT NO. 73-182
DRAWING NO. S-41
SHEET NO. 04.41.A1

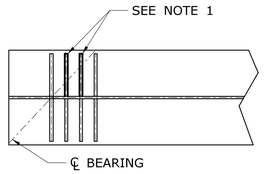

REMOVE INTERMEDIATE STIFFENERS

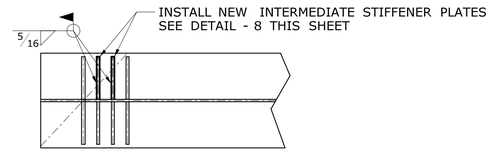

INSTALL NEW INTERMEDIATE STIFFENERS

G1 SPAN 5, NEAR PIER 4

SCALE: 3/4" = 1'-0"

SEQUENCE OF WORK FOR DETAILS 1-6

1. REMOVE EXISTING STIFFENER, LATERAL BRACINGS, GUSSET PLATES, WEB REPAIR PLATE, AND LOWER CROSS FRAME ANGLE AS APPLICABLE
2. INSTALL WEB REPAIR PLATES. SEE NOTE 2
3. INSTALL NEW INTERMEDIATE STIFFENER PLATES. SEE DETAIL-8, THIS SHEET
4. REINSTALL (REPLACE IF INDICATED ON S-23) LATERAL BRACING AND LOWER CROSS FRAME ANGLE ON NEW GUSSET PLATES

STEEL REPAIR NOTES

NOTE 1: DETERIORATED INTERMEDIATE STIFFENERS SHALL BE REPAIRED. CRITERIA FOR PLATING SHALL BE SECTION LOSS EXCEEDING 25%. PLATE SIZE SHALL BE DETERMINED IN THE FIELD AND BE OF THICKNESS 3/4". CRITERIA FOR REPLACEMENT SHALL BE PERFORATIONS, OR SECTION LOSS EXCEEDING 50%. SIZE OF REPLACEMENT STIFFENER PLATES SHALL BE 9" X 5/8". HEIGHT TO BE DETERMINED IN THE FIELD.

NOTE 2: NEW WEB PLATES SHALL BE 3/4" THICK WITH CHAMFER ON BOTTOM EDGE TO CLEAR EXISTING WELD. SIZE OF THE NEW WEB PLATES SHALL BE DETERMINED IN THE FIELD. AT WEB PERFORATIONS TWO PLATES SHALL ALWAYS BE INSTALLED, ONE EACH SIDE OF WEB.

NOTE 3: DETERIORATED BEARING STIFFENERS SHALL BE REPAIRED. CRITERIA FOR PLATING SHALL BE SECTION LOSS EXCEEDING 25%. PLATE SIZE SHALL BE DETERMINED IN THE FIELD AND BE OF THICKNESS 3/4". CRITERIA FOR REPLACEMENT SHALL BE PERFORATIONS, OR SECTION LOSS EXCEEDING 50%. SIZE OF REPLACEMENT STIFFENER PLATES SHALL BE 9" X 1 3/8". HEIGHT TO BE DETERMINED IN THE FIELD.

⚠ NOTE 4: STEEL REPAIR PLATES FOR DETERIORATED AREAS SHALL BE PAID FOR UNDER THE ITEM "STRUCTURAL STEEL"

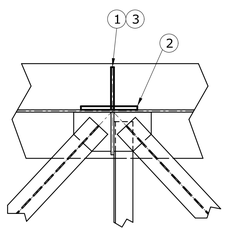

DETAIL 1 / 4
SCALE: 3/4" = 1'-0"

NOTE: DETAIL 4 SHOWN. DETAIL 1 IS SIMILAR. INSTALL WEB REPAIR PLATE IF NECESSARY.

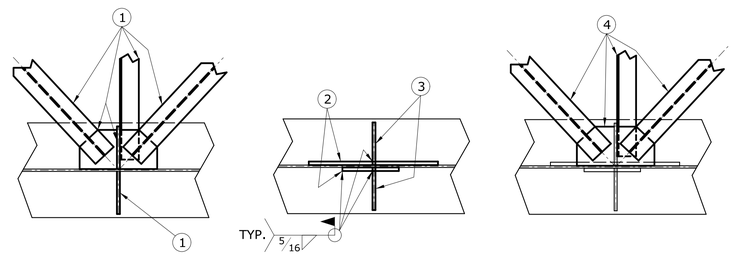

DETAIL 2 / 3 / 5
SCALE: 3/4" = 1'-0"

NOTE: DETAIL 3 SHOWN. DETAIL 2 AND 5 ARE SIMILAR.

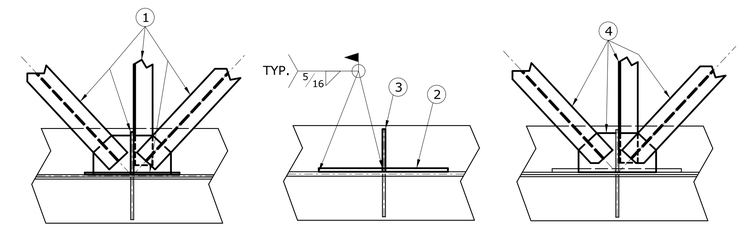

DETAIL 6
SCALE: 3/4" = 1'-0"

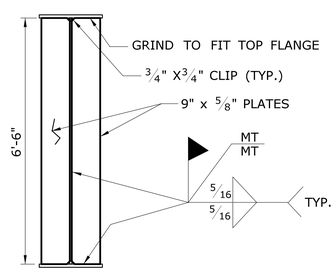

INSTALLATION OF STIFFENER PLATES FOR TEMPORARY SUPPORT SYSTEM DETAIL 7
SCALE: 1/2" = 1'-0"

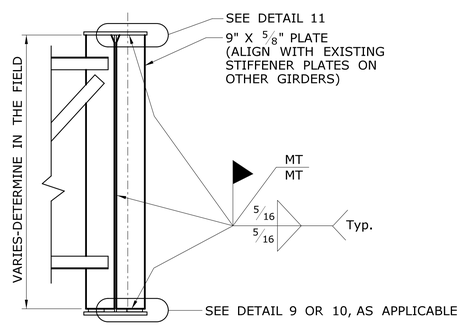

TYPICAL INSTALLATION OF NEW CONNECTION PLATE DETAIL 8
SCALE: 1/2" = 1'-0"

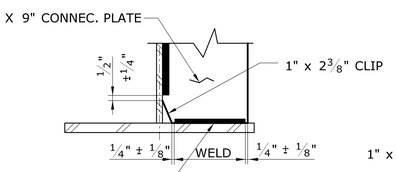

DETAIL 9
SCALE: 1 1/2" = 1'-0"

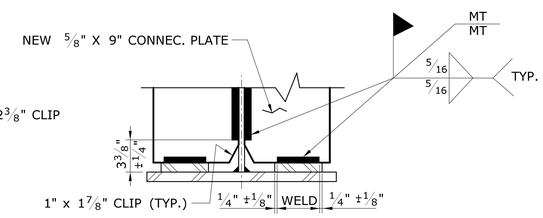

DETAIL 10
SCALE: 1 1/2" = 1'-0"

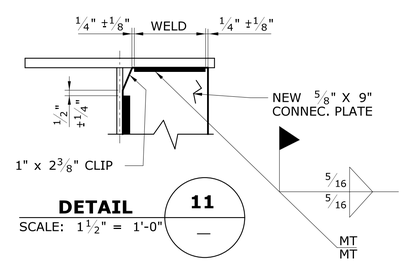

DETAIL 11
SCALE: 1 1/2" = 1'-0"

ADDENDUM NO. 1

REV.	DATE	REVISION DESCRIPTION	SHEET NO.
⚠	6/23/2015	ADDED PAYMENT	-
-	-	-	-
-	-	-	-
-	-	-	-
-	-	-	-
-	-	-	-
-	-	-	-

THE INFORMATION, INCLUDING ESTIMATED QUANTITIES OF WORK, SHOWN ON THESE SHEETS IS BASED ON LIMITED INVESTIGATIONS BY THE STATE AND IS IN NO WAY WARRANTED TO INDICATE THE CONDITIONS OF ACTUAL QUANTITIES OF WORK WHICH WILL BE REQUIRED.

Plotted Date: 6/23/2015

DESIGNER/DRAFTER: RDD/JWP
CHECKED BY: EWP
SCALE AS NOTED

STATE OF CONNECTICUT
DEPARTMENT OF TRANSPORTATION

Filename: ...\0073-0182_S-44A_Steel_Repairs_2.dgn

SIGNATURE/BLOCK: OFFICE OF ENGINEERING
APPROVED BY: DATE:

PROJECT TITLE: REHABILITATION OF BRIDGE NO. 00608 ROUTE 8 NB

TOWN: LITCHFIELD/HARWINTON
DRAWING TITLE: STEEL REPAIRS 2

PROJECT NO. 73-182
DRAWING NO. S-44
SHEET NO. 04.44.A1

STEEL REPAIR NOTES AT PIER 4 AND NORTH ABUTMENT

NOTE 1: RAISE SUPERSTRUCTURE AFTER INSTALLING BEARING STIFFENERS REQUIRED FOR JACKING SYSTEM

NOTE 2: REMOVE EXISTING BEARING STIFFENERS, LATERAL BRACINGS, GUSSET PLATES, AND LOWER CROSS FRAME ANGLE IF PRESENT

NOTE 3: INSTALL NEW $^3/_4$" THICK WEB PLATE(S) WITH CHAMFER ON BOTTOM EDGE TO CLEAR EXISTING WELD. SIZE OF THE NEW WEB PLATES SHALL BE DETERMINED IN THE FIELD. AT WEB PERFORATIONS TWO PLATES SHALL ALWAYS BE INSTALLED, ONE EACH SIDE OF WEB.

NOTE 4: INSTALL NEW BEARING STIFFENER(S)

NOTE 5: (AT PIER 4) INSTALL NEW GUSSET PLATE AND LATERAL BRACING SEE DETAILS ON S-42

NOTE 6: (AT NORTH ABUTMENT) INSTALL NEW GUSSET PLATE, LATERAL BRACINGS, AND LOWER CROSS FRAME ANGLE

NOTE 7: DETERIORATED INTERMEDIATE STIFFENERS SHALL BE REPAIRED. CRITERIA FOR PLATING SHALL BE SECTION LOSS EXCEEDING 25%. PLATE SIZE SHALL BE DETERMINED IN THE FIELD AND BE OF THICKNESS $^3/_4$". CRITERIA FOR REPLACEMENT SHALL BE PERFORATIONS, OR SECTION LOSS EXCEEDING 50%. SIZE OF REPLACEMENT STIFFENER PLATES SHALL BE 9" X $^5/_8$". HEIGHT TO BE DETERMINED IN THE FIELD.

NOTE 8: DETERIORATED BEARING STIFFENERS SHALL BE REPAIRED. CRITERIA FOR PLATING SHALL BE SECTION LOSS EXCEEDING 25%. PLATE SIZE SHALL BE DETERMINED IN THE FIELD AND BE OF THICKNESS $^3/_4$". CRITERIA FOR REPLACEMENT SHALL BE PERFORATIONS, OR SECTION LOSS EXCEEDING 50%. SIZE OF REPLACEMENT STIFFENER PLATES SHALL BE 9" X $1^3/_8$". HEIGHT TO BE DETERMINED IN THE FIELD.

△1 NOTE 4: STEEL REPAIR PLATES FOR DETERIORATED AREAS SHALL BE PAID FOR UNDER THE ITEM "STRUCTURAL STEEL"

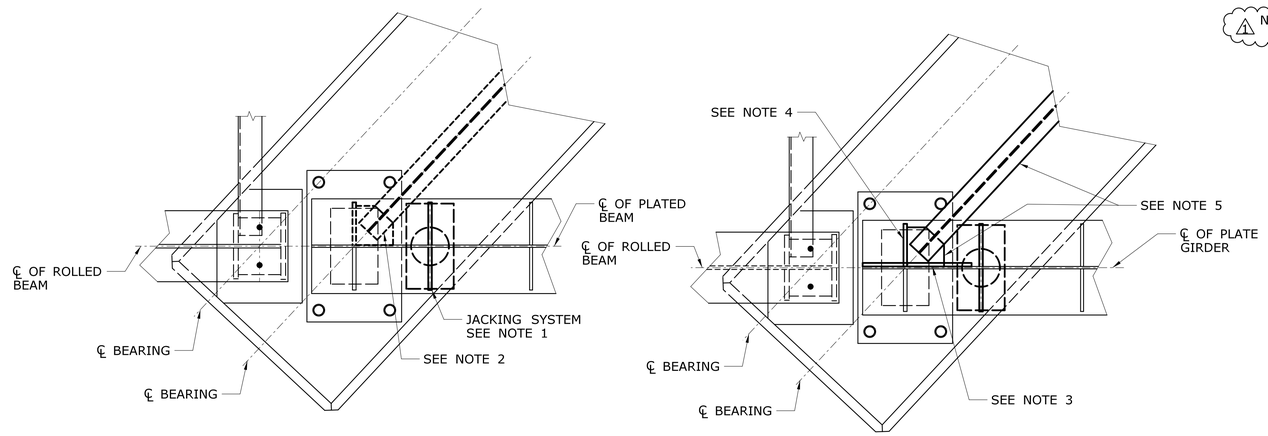

DETAIL 7
SCALE: $^3/_4$" = 1'-0"

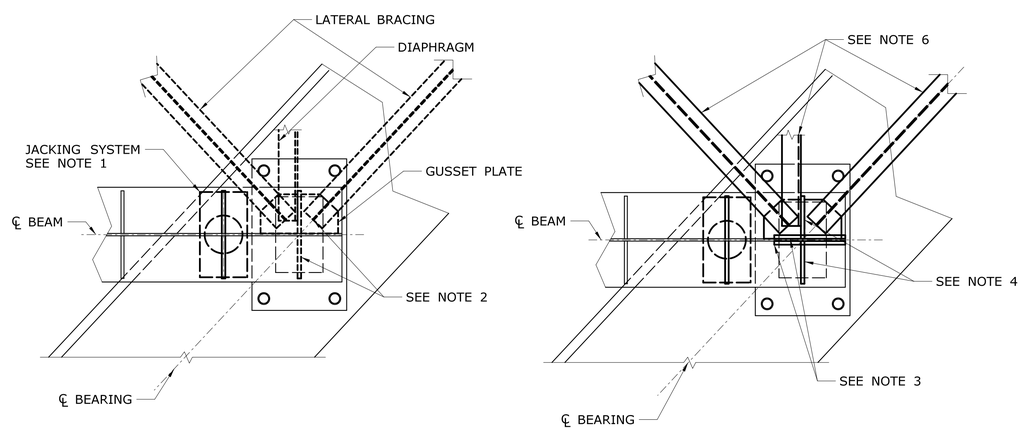

DETAIL 8
SCALE: $^3/_4$" = 1'-0"

ADDENDUM NO. 1

REV.	DATE	REVISION DESCRIPTION	SHEET NO.
△1	6/23/2015	ADDED PAYMENT	-
-	-	-	-
-	-	-	-
-	-	-	-
-	-	-	-
-	-	-	-
-	-	-	-

THE INFORMATION, INCLUDING ESTIMATED QUANTITIES OF WORK, SHOWN ON THESE SHEETS IS BASED ON LIMITED INVESTIGATIONS BY THE STATE AND IS IN NO WAY WARRANTED TO INDICATE THE CONDITIONS OF ACTUAL QUANTITIES OF WORK WHICH WILL BE REQUIRED.

Plotted Date: 6/23/2015

DESIGNER/DRAFTER: RDD/JWP
CHECKED BY: SAB
SCALE AS NOTED

STATE OF CONNECTICUT
DEPARTMENT OF TRANSPORTATION

Filename: ...\0073-0182_S-45A_Steel_Repairs_3.dgn

SIGNATURE/BLOCK: OFFICE OF ENGINEERING
APPROVED BY: DATE:

PROJECT TITLE: REHABILITATION OF BRIDGE NO. 00608 ROUTE 8 NB

TOWN: LITCHFIELD/HARWINTON
DRAWING TITLE: STEEL REPAIRS 3

PROJECT NO. 73-182
DRAWING NO. S-45
SHEET NO. 04.45.A1