# INDEX OF DRAWINGS

| DRAWING NUMBER | DRAWING TITLE | DRAWING NUMBER | DRAWING TITLE |
|---|---|---|---|
| FIO-1 | INDEX OF DRAWINGS | | |
| FIO-2 TO 26 | SITE NO. 9 (SIMMONS ROAD OVER I-84, EAST HARTFORD) | | |

**FOR INFORMATION ONLY**

| REV. | DATE | REVISION DESCRIPTION |
|---|---|---|
| - | - | - |
| - | - | - |
| - | - | - |
| - | - | - |
| - | - | - |
| - | - | - |
| - | - | - |

THE INFORMATION, INCLUDING ESTIMATED QUANTITIES OF WORK, SHOWN ON THESE SHEETS IS BASED ON LIMITED INVESTIGATIONS BY THE STATE AND IS IN NO WAY WARRANTED TO INDICATE THE CONDITIONS OF ACTUAL QUANTITIES OF WORK WHICH WILL BE REQUIRED.

NOT TO SCALE

**STATE OF CONNECTICUT**
**DEPARTMENT OF TRANSPORTATION**

SIGNATURE/ BLOCK:
OFFICE OF ENGINEERING
APPROVED BY:

PROJECT TITLE:
**REPLACEMENT OF OVERHEAD SIGN SUPPORTS ON VARIOUS ROUTES STATEWIDE**

TOWN: **VARIOUS**

DRAWING TITLE: **FOR INFORMATION ONLY**

PROJECT NO. **170-3303**
DRAWING NO. **FIO-1**
SHEET NO. **010.01**

**Project 170-3303 – For Information Purposes Only**

The attached drawings show the original construction details for the Bridge at Site 9 (Simmons Road over I-84).

The drawings are provided for the contractor's information only and are not guaranteed.

**FOR INFORMATION ONLY**

| REV. | DATE | REVISION DESCRIPTION |
|---|---|---|
| - | - | - |
| - | - | - |
| - | - | - |
| - | - | - |
| - | - | - |
| - | - | - |
| - | - | - |

THE INFORMATION, INCLUDING ESTIMATED QUANTITIES OF WORK, SHOWN ON THESE SHEETS IS BASED ON LIMITED INVESTIGATIONS BY THE STATE AND IS IN NO WAY WARRANTED TO INDICATE THE CONDITIONS OF ACTUAL QUANTITIES OF WORK WHICH WILL BE REQUIRED.

NOT TO SCALE

**STATE OF CONNECTICUT**
**DEPARTMENT OF TRANSPORTATION**

SIGNATURE/ BLOCK:
OFFICE OF ENGINEERING

APPROVED BY:

PROJECT TITLE:
**REPLACEMENT OF OVERHEAD SIGN SUPPORTS ON VARIOUS ROUTES STATEWIDE**

TOWN:
**VARIOUS**

DRAWING TITLE:
**FOR INFORMATION ONLY**

PROJECT NO.
**170-3303**

DRAWING NO.
**FIO-2**

SHEET NO.
**010.02**

FORM NO. ENG. 158 ED. 1-76

| F.H.W.A. REGION | STATE | TOWN | FED. AID PROJ. NO. | PROJ. NO. | YEAR | ROUTE NO. | SHEET NO. | TOTAL SHEETS |
|---|---|---|---|---|---|---|---|---|
| 1 | CONN. | E. HARTFORD-MANCHESTER | I-84-4(105)65 | 42-213 | 1983 | I-84/186 | 319 | 1020 |

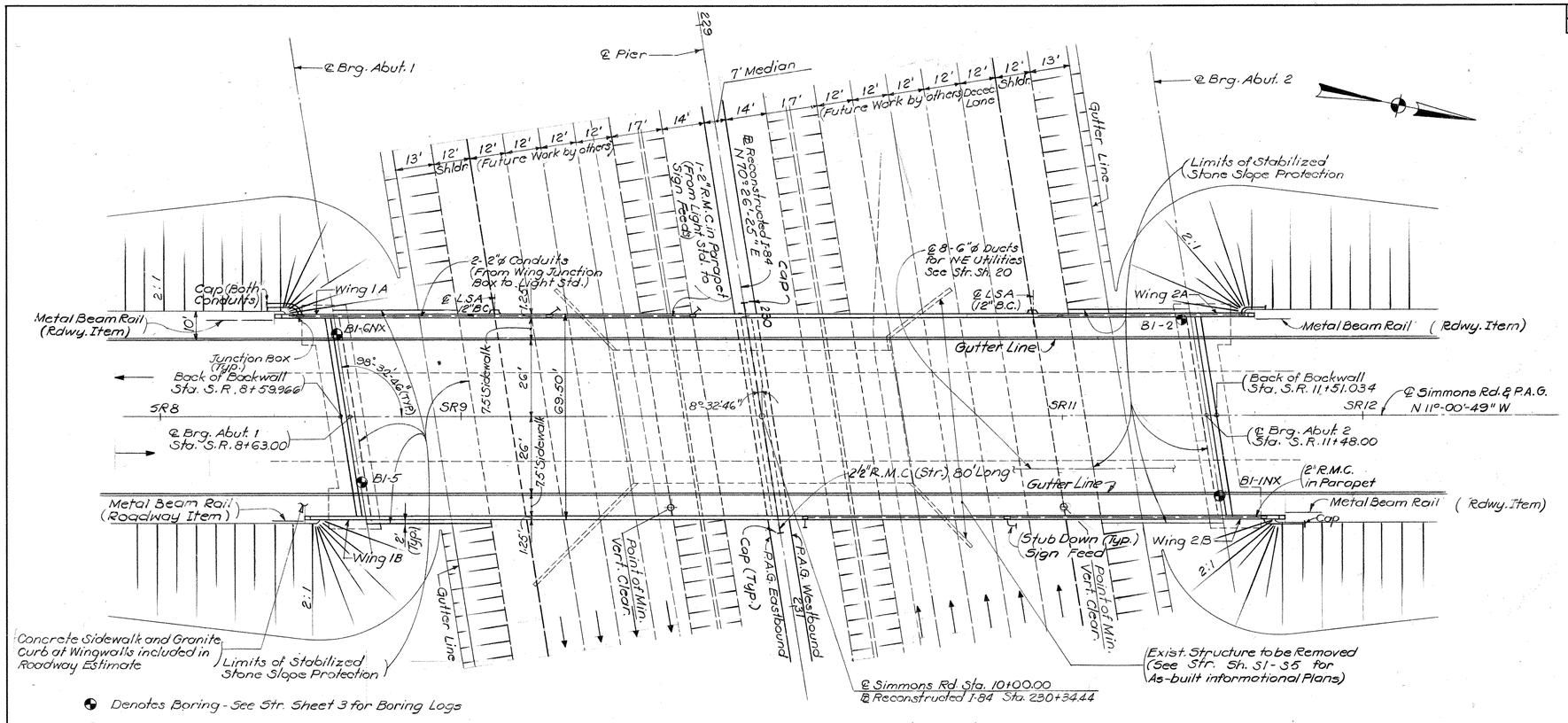


Denotes Boring - See Str. Sheet 3 for Boring Logs

## PLAN

Scale: 1" = 20'

**Fracture Critical Bridge Members**

This structure contains fracture critical members. All work shall be performed in accordance with the AASHTO Guide Specifications for Fracture Critical Non-Redundant Steel Bridge Members (Sept., 1978) with the Revisions of Interim 1981.

For Illumination Abbreviations and Details See Electrical Detail on Str. Sh. 24

For Sign Support Locations and Details see Str. Shs. 22 & 23.

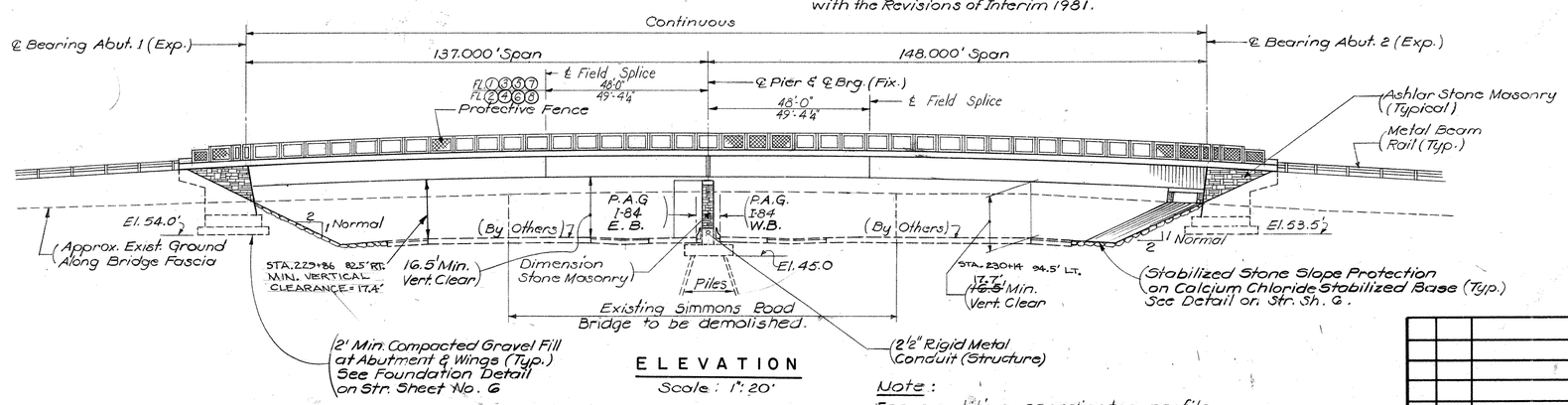


## ELEVATION

Scale: 1" = 20'

**Note:**
For quantities, coordinates, profiles and working points see str. Sht. 2

## GENERAL NOTES

SPECIFICATIONS:
CONNECTICUT DEPARTMENT OF TRANSPORTATION FORM 812 (1980), AND SPECIAL PROVISIONS.

DESIGN SPECIFICATIONS:
STANDARD SPECIFICATIONS FOR HIGHWAY BRIDGES (AASHTO-1977), WITH THE INTERIM SPECIFICATIONS UP TO AND INCLUDING 1982, AS SUPPLEMENTED BY THE CONNECTICUT DEPARTMENT OF TRANSPORTATION BRIDGE MANUAL 1964 AND CURRENT REVISIONS THEREOF.

ALLOWABLE DESIGN STRESSES:
CONCRETE: CLASS 'A' AND CLASS 'F' CONCRETE BASED ON $f'_c$ = 3,000 psi
REINFORCEMENT: (ASTM A615 GRADE 60 $f_s$ (TENSILE) = 24,000 psi
STRUCTURAL STEEL:
ASTM A588 $F_t$ = 27,000 psi ALL THICKNESSES TO 4" INCLUSIVE

LIVE LOAD: HS 20-44 **24,000 DUAL AXLE AT 4'-0" o.c.**

FUTURE PAVING ALLOWANCE: NONE

COMPOSITE CONSTRUCTION:
NO TEMPORARY INTERMEDIATE SUPPORTS SHALL BE USED DURING THE PLACING AND SETTING OF THE CONCRETE DECK SLAB. TEMPORARY SUPPORTS MAY BE USED FOR STRUCTURAL STEEL ERECTION ONLY. LIVE AND SUPERIMPOSED DEAD LOADS WILL BE PERMITTED WHEN DIRECTED BY THE ENGINEER BUT NOT LESS THAN 10 DAYS AFTER THE **FINAL PORTION OF THE DECK SLAB HAS BEEN PLACED.**

CLASS "A" CONCRETE
CLASS "A" CONCRETE SHALL BE USED FOR ENTIRE SUBSTRUCTURE AND **PARAPETS OF THE U-TYPE WINGS.**

**CLASS "F" CONCRETE**
**CLASS "F" CONCRETE SHALL BE USED FOR BRIDGE DECK INCLUDING PARAPETS.**

**REINFORCEMENT**
**TOP MAT OF DECK SLAB EPOXY COATED BARS.**

**PAINT:**
**NO PAINTING OF STRUCTURAL STEEL REQUIRED. STEEL SURFACES TO BE PREPARED FOR WEATHERING IN ACCORDANCE TO THE SPECIFICATION.**

PARAFFIN
THE COST OF FURNISHING AND APPLYING PARAFFIN IS INCLUDED IN THE ITEM CLASS "F" CONCRETE.

JOINT SEAL: SEE SPECIAL PROVISION

EXPOSED EDGES
EXPOSED EDGES SHALL BE BEVELED 1" x 1" UNLESS DIMENSIONED OTHERWISE.

STRUCTURAL STEEL
SEE STRUCTURE SHEET NO. **11, 12, 13, 14, 15, 19, 22 & 23 FOR ASTM DESIGNATIONS.**

**DECIMAL DIMENSIONS**
**WHEN DIMENSIONS ARE GIVEN TO LESS THAN THREE DECIMAL PLACES, THE OMITTED DIGITS SHALL BE ASSUMED TO BE ZEROS.**

CONSTRUCTION JOINTS
CONSTRUCTION JOINTS OTHER THAN THOSE SHOWN ON THE PLANS, WILL NOT BE PERMITTED WITHOUT PRIOR APPROVAL OF THE ENGINEER.

FINISHED BRIDGE SLAB ELEVATIONS
FINISHED BRIDGE SLAB ELEVATIONS **ARE SHOWN** ON THE TOP OF BITUMINOUS CONCRETE OVERLAY.

FOUNDATION PRESSURES & PILE LOADS
**THE VARIOUS GROUP LOADINGS NOTED ON SUBSTRUCTURE PLAN SHEET REFER TO THE GROUP LOADS AS GIVEN IN AASHTO STANDARD SPECIFICATIONS FOR HIGHWAY BRIDGES.**

MAINTENANCE OF TRAFFIC AT BRIDGE SITE
**SEE SPECIAL PROVISION**

**REMAIN IN PLACE FORMS**
**THE STRUCTURE HAS BEEN DESIGNED FOR 15#/S.F. ADDITIONAL LOAD OVER THE DECK AREA TO ALLOW FOR REMAIN IN PLACE FORMS.**

F.A.P. No. I-84-4(105)65

# CONNECTICUT
DEPARTMENT OF TRANSPORTATION

EAST HARTFORD - MANCHESTER

RECONSTRUCTION OF INTERSTATE ROUTE 84
E.B. & W.B. ROADWAYS
UNDER
SIMMONS ROAD

GENERAL PLAN

| NO. | DATE | DESCRIPTION |
|---|---|---|
| | | |

REVISIONS

ENGINEER DE LEUW CATHER & COMPANY
DESIGNER J.C. | DRAFTSMAN C.O. | CHECKER E.S.
APPROVED | DATE
STRUCTURE NO. 42-213-1 | BRIDGE LOG NO. | STRUCTURE SHEET NO. 1 OF 32

42-213

514 01 FOR INFORMATION ONLY 319

| REV. | DATE | REVISION DESCRIPTION |
|---|---|---|
| - | - | - |
| - | - | - |
| - | - | - |
| - | - | - |
| - | - | - |
| - | - | - |
| - | - | - |

THE INFORMATION, INCLUDING ESTIMATED QUANTITIES OF WORK, SHOWN ON THESE SHEETS IS BASED ON LIMITED INVESTIGATIONS BY THE STATE AND IS IN NO WAY WARRANTED TO INDICATE THE CONDITIONS OF ACTUAL QUANTITIES OF WORK WHICH WILL BE REQUIRED.

NOT TO SCALE

STATE OF CONNECTICUT
DEPARTMENT OF TRANSPORTATION

SIGNATURE/BLOCK: OFFICE OF ENGINEERING
APPROVED BY:

PROJECT TITLE: REPLACEMENT OF OVERHEAD SIGN SUPPORTS ON VARIOUS ROUTES STATEWIDE

TOWN: VARIOUS

DRAWING TITLE: FOR INFORMATION ONLY

PROJECT NO. 170-3303
DRAWING NO. FIO-3
SHEET NO. 010.03

| F.H.W.A. REGION | STATE | TOWN | FED. AID PROJ. NO. | PROJ. NO. | YEAR | ROUTE NO. | SHEET NO. | TOTAL SHEETS |
|---|---|---|---|---|---|---|---|---|
| 1 | CONN. | E.HARTFORD-MANCHESTER | I-84-4(105)65 | 42-213 | 1983 | I-84/186 | 320 | 1020 |

FORM NO. ENG. 158 ED. 1-75

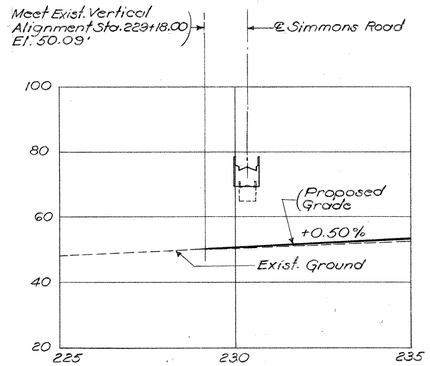


RECONSTRUCTED I-84

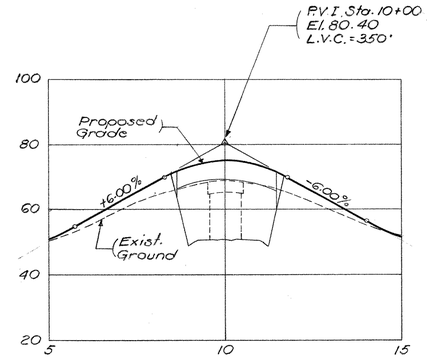


SIMMONS ROAD

## PROFILES

SCALES: 1" = 200' Horiz.
1" = 20' Vert.

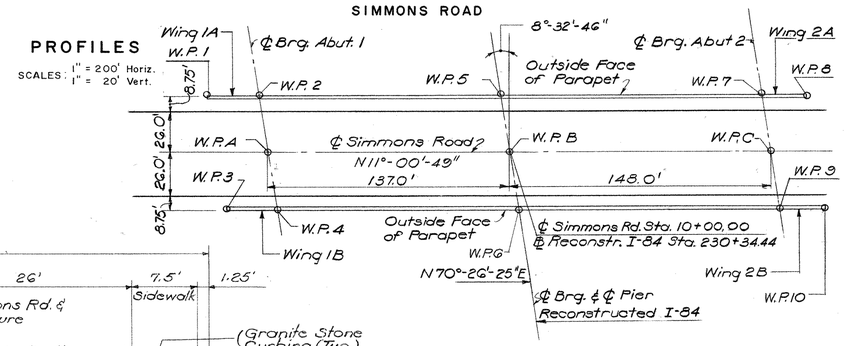


WORKING POINT LOCATION PLAN

SCALE: 1" = 40'

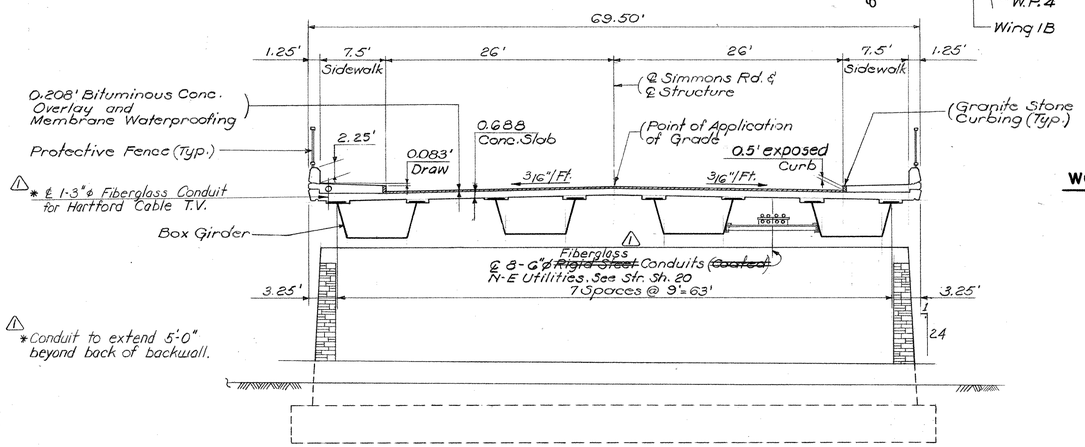


TYPICAL BRIDGE SECTION

SCALE: 1/8" = 1'-0"

## TABLE OF QUANTITIES

| ITEM | UNIT | QUANTITY |
|---|---|---|
| Structure Excavation - Earth (Complete) | C.Y. | 3,500 |
| | | |
| Compacted Gravel Fill | C.Y. | 210 |
| Pervious Structure Backfill | C.Y. | 900 |
| Bituminous Concrete Class 1 | Ton. | 115 |
| Bituminous Concrete Class 12 | Ton. | 115 |
| 6" CCM Outlets For Underdrains | L.F. | 100 |
| Shear Connectors | L.S. | L.S. |
| Polyvinyl Chloride Plastic Pipe (1½") | L.F. | 90 |
| Class "A" Concrete | C.Y. | 940 |
| Class "F" Concrete | C.Y. | 810 |
| ½" Preformed Joint Filler for Bridges | S.F. | 300 |
| Deformed Steel Bars (Epoxy Coated) | LB. | 103,000 |
| Deformed Steel Bars | LB. | 188,000 |
| Structural Steel - Bridge No. 42-213-1 | L.S. | L.S. |
| Ashlar Stone Masonry | C.Y. | 10 |
| Dimension Stone Masonry | C.Y. | 10 |
| Concrete Cylinder Curing Box | EA. | 1 |
| 1" Preformed Joint Filler for Bridges | S.F. | 280 |
| Furnishing Steel Piles | LB. | 275,000 |
| Driving Steel Piles | L.F. | 5,200 |
| Test Pile (Steel HP 12×53 - 130' Long) | EA. | 1 |
| Splicing Steel Piles | EA. | 20 |
| Point Reinforcement For Steel Piles | EA. | 10 |
| Membrane Waterproofing (Sheet) | S.Y. | 1,700 |
| Dampproofing | S.Y. | 380 |
| 6"×8" Granite Stone Curbing For Bridges | L.F. | 575 |
| Protective Compound For Bridges | S.Y. | 210 |
| 18"×12"×8" Cast Iron Junction Box | EA. | 9 |
| 2" Rigid Metal Conduit In Structure | L.F. | 470 |
| Prefabricated Expansion Jt. (Movement Capacity 3") | L.F. | 140 |
| Stain Protection - Bridge No. 42-213-1 | L.S. | L.S. |
| Stabilized Stone Slope Protection | S.Y. | 725 |
| Bagged Stone | C.F. | 70 |
| Calcium Chloride Stabilized Base | TON | 80 |
| Metal Bridge Rail (Protective Fence) | L.F. | 650 |
| Removal Of Super Structure - Simmons Road Bridge | L.S. | L.S. |
| Removal Of Existing Masonry - Simmons Road Bridge | C.Y. | 500 |
| Pot or Spherical Bearings (300 Kips) | Ea. | 8 |
| Pot or Spherical Bearings (900 Kips) | Ea. | 4 |
| 2½" Rigid Metal Conduit in Structure | L.F. | 80 |
| Splicing Steel Girders (42-213-1) | Ea. | 8 |

## TABLE OF COORDINATES

| WORKING POINT | COORDINATES NORTH | COORDINATES EAST |
|---|---|---|
| A | 340261.609 | 635770.285 |
| B | 340356.086 | 635744.112 |
| C | 340541.360 | 635715.836 |
| 1 | 340230.213 | 635740.993 |
| 2 | 340249.845 | 635737.173 |
| 3 | 340253.742 | 635807.218 |
| 4 | 340273.374 | 635803.357 |
| 5 | 340384.322 | 635711.000 |
| 6 | 340407.851 | 635777.224 |
| 7 | 340529.596 | 635682.725 |
| 8 | 340550.209 | 635678.714 |
| 9 | 340553.125 | 635748.950 |
| 10 | 340573.738 | 635744.938 |

## INSPECTION OF FIELD WELDS

| METHOD | UNIT | QUANTITY |
|---|---|---|
| Radiographic or Ultrasonic | Inch | 2350 |
| Magnetic Particle | L.F. | 0 |
| Ultrasonic | Inch | 0 |

## CONCRETE DISTRIBUTION

| LOCATION | UNIT | QUANTITY |
|---|---|---|
| Superstructure | C.Y. | 810 |
| Substructure | C.Y. | 550 |
| Footings | C.Y. | 390 |
| Total | C.Y. | 1750 |

THE INFORMATION, INCLUDING ESTIMATED QUANTITIES OF WORK SHOWN ON THESE SHEETS IS BASED ON LIMITED INVESTIGATIONS BY THE STATE AND IS NO WAY WARRANTED TO INDICATE THE TRUE CONDITIONS OR ACTUAL QUANTITIES OR DISTRIBUTION OF QUANTITIES OF WORK WHICH WILL BE REQUIRED.

| NO. | DATE | DESCRIPTION |
|---|---|---|
| 1 | 3/84 | Conduit Revisions |

REVISIONS

# CONNECTICUT
DEPARTMENT OF TRANSPORTATION

EAST HARTFORD – MANCHESTER

RECONSTRUCTION OF INTERSTATE ROUTE 84
E.B. & W.B. ROADWAYS
UNDER
SIMMONS ROAD

PROFILES, TYPICAL BRIDGE SECTION, COORDINATES & QUANTITIES

ENGINEER DE LEUW CATHER & COMPANY
DESIGNER J.C. DRAFTSMAN G.F. CHECKER E.S.
APPROVED DATE
STRUCTURE NO. 42-213-1 BRIDGE LOG NO. STRUCTURE SHEET NO. 2 OF 32

42-213

514 01 FOR INFORMATION ONLY 320

| REV. | DATE | REVISION DESCRIPTION |
|---|---|---|
| - | - | - |
| - | - | - |
| - | - | - |
| - | - | - |
| - | - | - |
| - | - | - |
| - | - | - |

THE INFORMATION, INCLUDING ESTIMATED QUANTITIES OF WORK, SHOWN ON THESE SHEETS IS BASED ON LIMITED INVESTIGATIONS BY THE STATE AND IS IN NO WAY WARRANTED TO INDICATE THE CONDITIONS OF ACTUAL QUANTITIES OF WORK WHICH WILL BE REQUIRED.

NOT TO SCALE

STATE OF CONNECTICUT
DEPARTMENT OF TRANSPORTATION

SIGNATURE/BLOCK: OFFICE OF ENGINEERING
APPROVED BY:

PROJECT TITLE: REPLACEMENT OF OVERHEAD SIGN SUPPORTS ON VARIOUS ROUTES STATEWIDE

TOWN: VARIOUS

DRAWING TITLE: FOR INFORMATION ONLY

PROJECT NO. 170-3303
DRAWING NO. FIO-4
SHEET NO. 010.04

FORM NO. ENG. 15A ED. 1-75

| F.H.W.A. REGION | STATE | TOWN | FED. AID PROJ. NO. | PROJ. NO. | YEAR | ROUTE NO. | SHEET NO. | TOTAL SHEETS |
|---|---|---|---|---|---|---|---|---|
| 1 | CONN. | E.HARTFORD-MANCHESTER | I-84-4(105)65 | 42-213 | 1983 | I84/186 | 321 | 1020 |

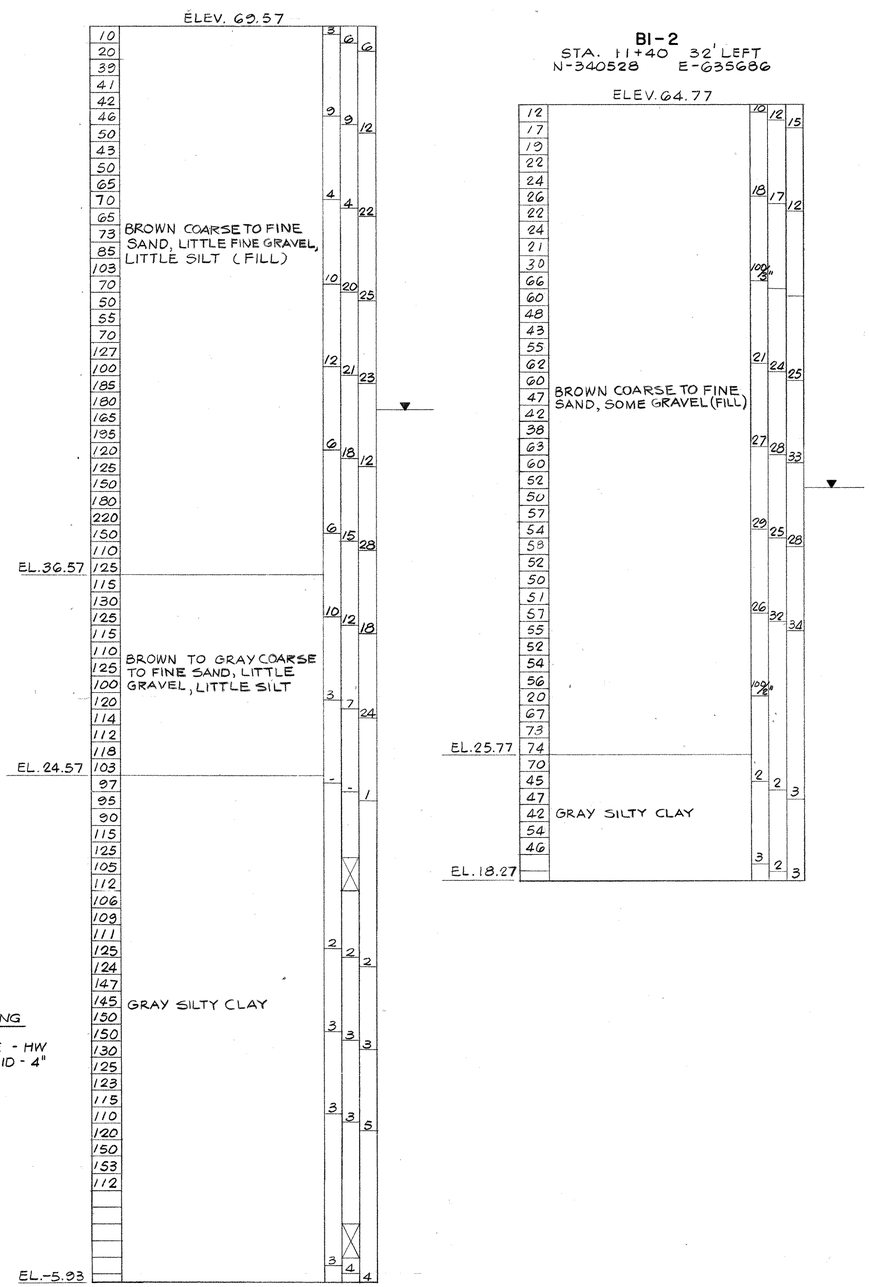


## KEY TO BORINGS

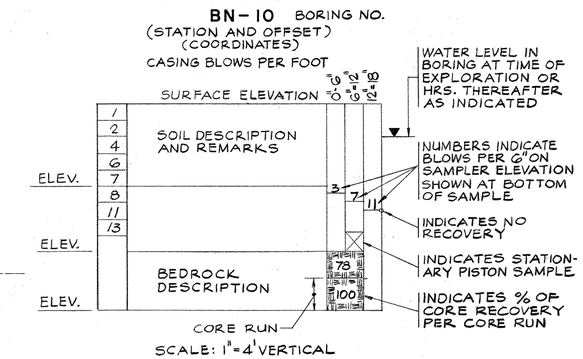


| DATA FOR BORINGS | | | |
|---|---|---|---|
| | CASING | SAMPLER | CORE BARREL |
| TYPE | FJ | S.S. | — |
| SIZE ID. | 2½" | 1⅜" | — |
| HAMMER Wt. | 300# | 140# | — |
| HAMMER FALL | 24" | 30" | — |
| BIT TYPE - | — | | |
| DATE TAKEN (BORINGS) - APRIL, 1979 | | | |

NOTE: DATA FOR BORINGS IS TYPICAL, EXCEPT WHERE OTHERWISE NOTED.

THE INFORMATION, INCLUDING ESTIMATED QUANTITIES OF WORK SHOWN ON THESE SHEETS IS BASED ON LIMITED INVESTIGATIONS BY THE STATE AND IS IN NO WAY WARRANTED TO INDICATE THE TRUE CONDITIONS OR ACTUAL QUANTITIES OR DISTRIBUTION OF QUANTITIES OF WORK WHICH WILL BE REQUIRED.

| NO. | DATE | DESCRIPTION |
|---|---|---|
| | | |
| | | |
| | | |
| | | |
| | | |
| | | |

REVISIONS

CONNECTICUT
DEPARTMENT OF TRANSPORTATION

EAST HARTFORD – MANCHESTER

RECONSTRUCTION OF INTERSTATE ROUTE 84
E.B. & W.B. ROADWAYS
UNDER
SIMMONS ROAD

BORINGS

ENGINEER DE LEUW CATHER & COMPANY
DESIGNER R.L. DRAFTSMAN Y. K. C. CHECKER E.S
APPROVED DATE
STRUCTURE NO. 42-213-1 BRIDGE LOG NO. STRUCTURE SHEET NO 3 OF 32

42-212

514 01 FOR INFORMATION ONLY 821

| REV. | DATE | REVISION DESCRIPTION |
|---|---|---|
| - | - | - |
| - | - | - |
| - | - | - |
| - | - | - |
| - | - | - |
| - | - | - |
| - | - | - |

THE INFORMATION, INCLUDING ESTIMATED QUANTITIES OF WORK, SHOWN ON THESE SHEETS IS BASED ON LIMITED INVESTIGATIONS BY THE STATE AND IS IN NO WAY WARRANTED TO INDICATE THE CONDITIONS OF ACTUAL QUANTITIES OF WORK WHICH WILL BE REQUIRED.

NOT TO SCALE

STATE OF CONNECTICUT
DEPARTMENT OF TRANSPORTATION

SIGNATURE/BLOCK: OFFICE OF ENGINEERING
APPROVED BY:

PROJECT TITLE: REPLACEMENT OF OVERHEAD SIGN SUPPORTS ON VARIOUS ROUTES STATEWIDE

TOWN: VARIOUS

DRAWING TITLE: FOR INFORMATION ONLY

PROJECT NO. 170-3303
DRAWING NO. FIO-5
SHEET NO. 010.05

FORM NO. ENG 158 ED 1-75

| FHWA REGION | STATE | TOWN | FED. AID PROJ. NO. | PROJ. NO. | YEAR | ROUTE NO. | SHEET NO. | TOTAL SHEETS |
|---|---|---|---|---|---|---|---|---|
| 1 | CONN. | E.HARTFORD-MANCHESTER | I-84-4(105)65 | 42-213 | 1983 | I-84/186 | 322 | 1020 |

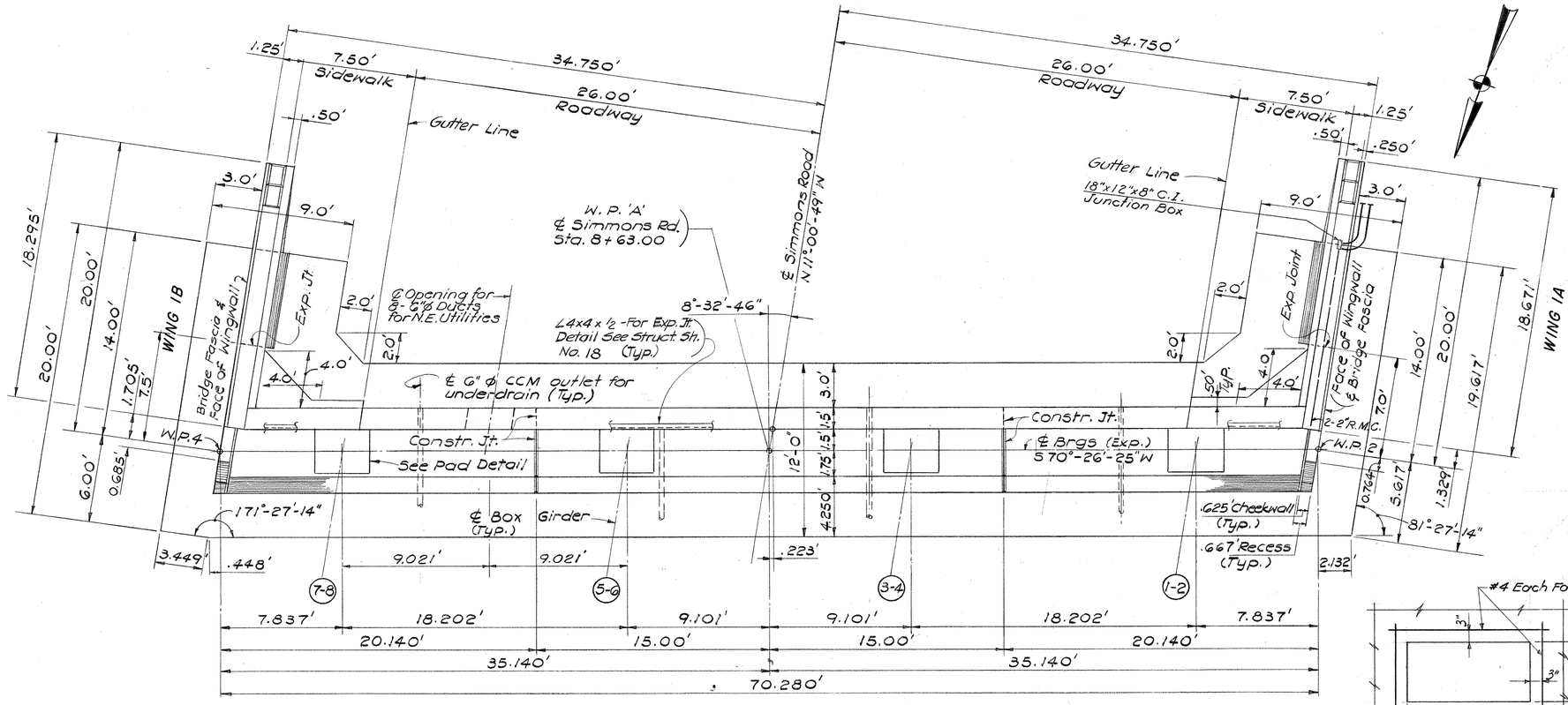


PLAN
Scale: ¼" = 1'-0"

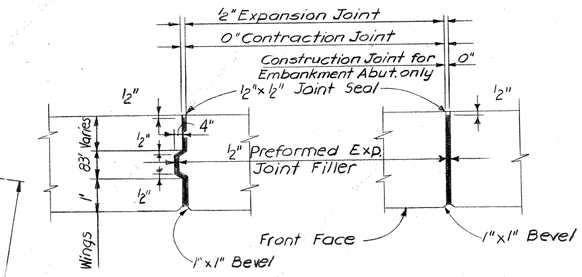


KEYED JOINTS NON-KEYED JOINTS

PLAN
VERTICAL STEM JOINT DETAILS

JOINT SEAL:
ABUTMENT - JOINT SEAL TO EXTEND FROM TOP OF FOOTING TO TOP OF BACKWALL.
PARAPET WALLS - JOINT SEAL TO EXTEND FROM TOP OF FOOTING TO TOP OF PARAPET AND HORIZONTALLY ALONG THIS JOINT TO OUTSIDE FACE OF PARAPET.

KEYS:
ABUTMENTS - NO KEYS REQUIRED
BACKWALL - NO KEYS REQUIRED
WINGWALL - NO KEYS REQUIRED

REINFORCEMENT:
NO REINFORCEMENT SHALL PASS THROUGH EXPANSION OR CONTRACTION JOINTS. REINFORCEMENT SHALL PASS THROUGH CONSTRUCTION JOINTS.

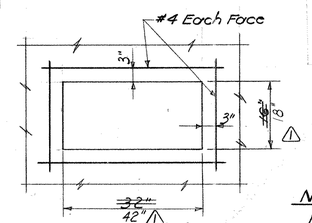


DETAIL 'A'
~~Scale: 3/4" = 1'-0"~~
NOT TO SCALE

NOTES:
For Typical Sections Through Abutment Wingwalls and for Wingwall Details see Str. Sh. No. 6.
For Abutment Reinforcement Plan see Str. Sh. #6.
For 8-5" Conduits N.E. Utilities Details see Str. Sh. 20
6 For Foundation Details see Str. Sh't. 6.
Design Foundation Pressure AASHTO Group I 1.00 Tons/SF, Group III 1.75 Tons/SF

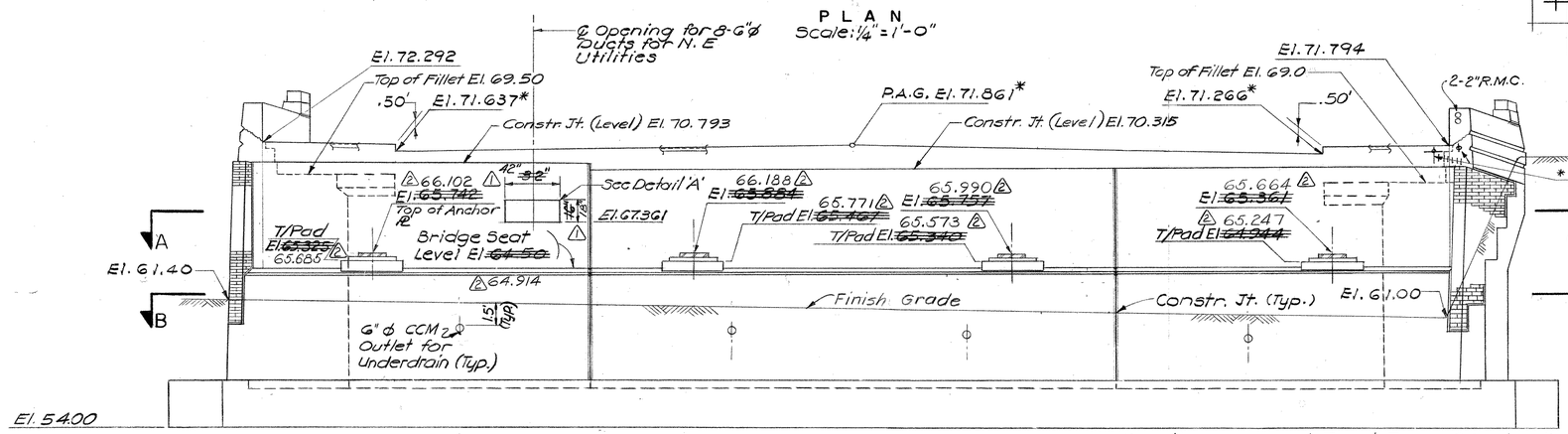


See Foundation Detail on Str. Sh. 6.

ELEVATION
Scale: ¼" = 1'-0"

*Elevations given at Front Face of Backwall

* Conduit to extend 5'-0" beyond back of backwall.

THE INFORMATION, INCLUDING ESTIMATED QUANTITIES OF WORK SHOWN ON THESE SHEETS IS BASED ON LIMITED INVESTIGATIONS BY THE STATE AND IS IN NO WAY WARRANTED TO INDICATE THE TRUE CONDITIONS OR ACTUAL QUANTITIES OR DISTRIBUTION OF QUANTITIES OF WORK WHICH WILL BE REQUIRED.

| NO. | DATE | DESCRIPTION |
|---|---|---|
| 1 | 3/84 | Revisions to dimensions & Cable T.V. Conduit. |
| 2 | 6/84 | Pad Elevation Revisions. |

REVISIONS

CONNECTICUT
DEPARTMENT OF TRANSPORTATION

EAST HARTFORD – MANCHESTER

RECONSTRUCTION OF INTERSTATE ROUTE 84
E.B. & W.B. ROADWAYS
UNDER
SIMMONS ROAD

ABUTMENT - 1

ENGINEER DE LEUW CATHER & COMPANY
DESIGNER J C | DRAFTSMAN T S G | CHECKER E.S.
APPROVED | DATE
STRUCTURE NO. 42-213-1 | BRIDGE LOG NO. | STRUCTURE SHEET NO. 4 of 32

42-213

514 01 FOR INFORMATION ONLY 322

| REV. | DATE | REVISION DESCRIPTION |
|---|---|---|
| - | - | - |
| - | - | - |
| - | - | - |
| - | - | - |
| - | - | - |
| - | - | - |
| - | - | - |
| - | - | - |

THE INFORMATION, INCLUDING ESTIMATED QUANTITIES OF WORK, SHOWN ON THESE SHEETS IS BASED ON LIMITED INVESTIGATIONS BY THE STATE AND IS IN NO WAY WARRANTED TO INDICATE THE CONDITIONS OF ACTUAL QUANTITIES OF WORK WHICH WILL BE REQUIRED.

NOT TO SCALE

STATE OF CONNECTICUT
DEPARTMENT OF TRANSPORTATION

SIGNATURE/BLOCK: OFFICE OF ENGINEERING
APPROVED BY:

PROJECT TITLE: REPLACEMENT OF OVERHEAD SIGN SUPPORTS ON VARIOUS ROUTES STATEWIDE

TOWN: VARIOUS

DRAWING TITLE: FOR INFORMATION ONLY

PROJECT NO. 170-3303
DRAWING NO. FIO-6
SHEET NO. 010.06

FORM NO ENG 15A ED 1-75

| FHWA REGION | STATE | TOWN | FED. AID PROJ. NO. | PROJ. NO | YEAR | ROUTE NO. | SHEET NO. | TOTAL SHEETS |
|---|---|---|---|---|---|---|---|---|
| 1 | CONN. | E.HARTFORD-MANCHESTER | I-84-4(105)65 | 42-213 | 1983 | I-84/186 | 323 | 1020 |

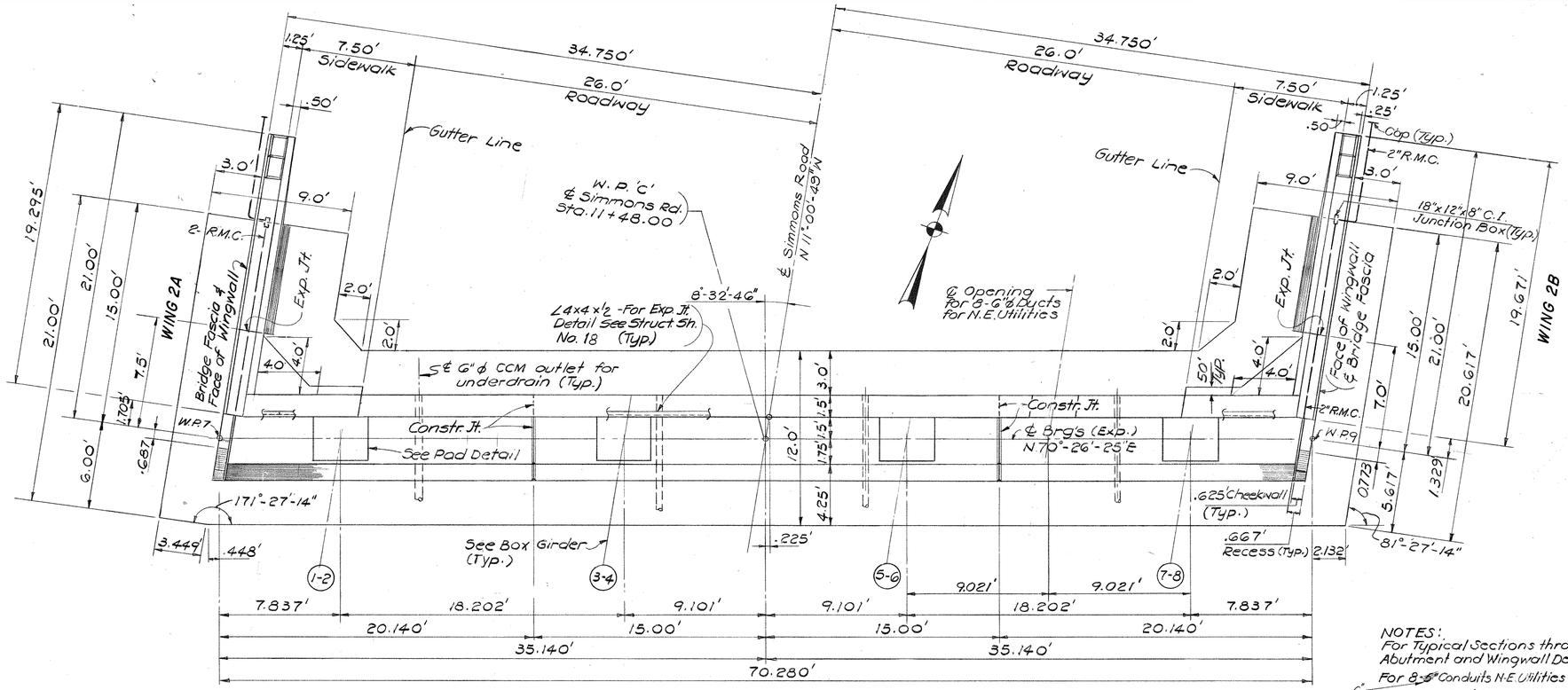


PLAN
Scale: ¼" = 1'-0"

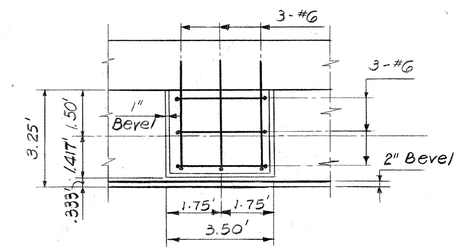


PLAN

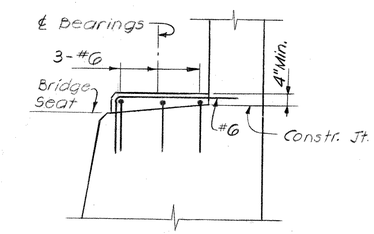


SECTION

TYPICAL PAD DETAIL
Scale: ½" = 1'-0"

NOTES:
For Typical Sections through Abutment and Wingwall Details see Str. Sht. 6
For 8-6" Conduits N.E. Utilities Details see Str. Sht. 20
6' For Fence Post Spacing see Str. Sht. 16
△ For Foundation Detail see Str. Sht. 6

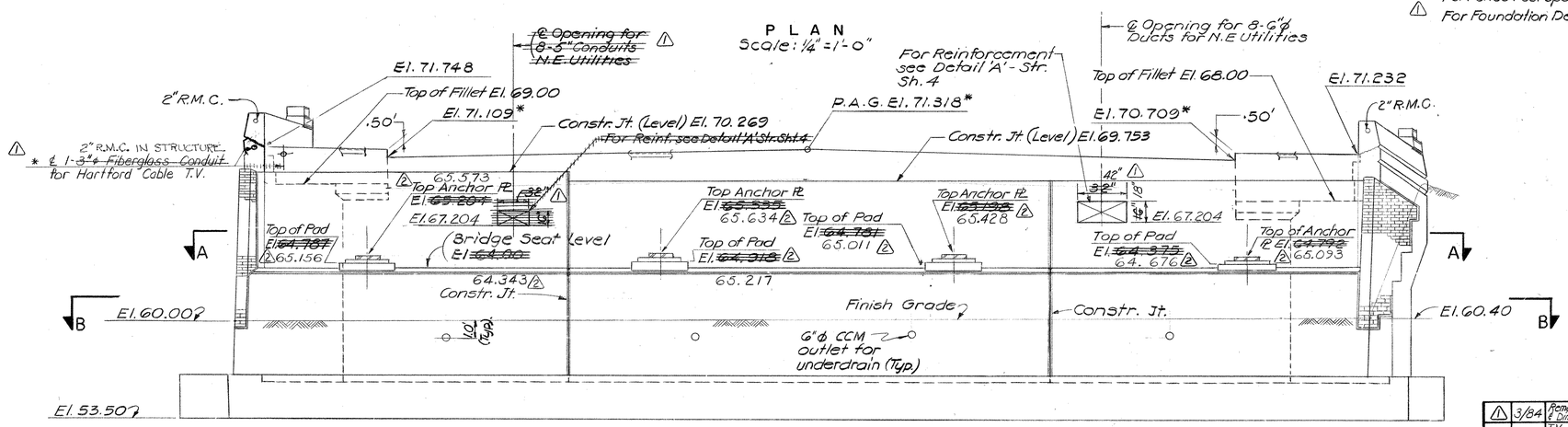


ELEVATION
Scale: ¼" = 1'-0"

△ * Conduit to extend 5'-0" beyond backwall of backwall.

*Elevations given at Front Face of Backwall

NOTE:
Anchor Bolts shall be castmonolithic with the substructure. No Anchor Bolt forms shall be used. The Anchor Plate shall be set to the correct elevation, leveled by adjusting the leveling nuts and the Anchor Bolts shall be burned off, welded and ground smooth as shown on the detail. The base plate of bearing shall be welded to Anchor Plate after the bearings are correctly located.
Design Foundation Pressure AASHTO Group I 1.00 Tons/SF, Group III 1.75 Tons/SF

THE INFORMATION, INCLUDING ESTIMATED QUANTITIES OF WORK SHOWN ON THESE SHEETS IS BASED ON LIMITED INVESTIGATIONS BY THE STATE AND IS IN NO WAY WARRANTED TO INDICATE THE TRUE CONDITIONS OR ACTUAL QUANTITIES OR DISTRIBUTION OF QUANTITIES OF WORK WHICH WILL BE REQUIRED.

| NO. | DATE | DESCRIPTION |
|---|---|---|
| △1 | 3/84 | Removal of Conduit Opening & Dimension Revisions + Cable T.V. Installation. |
| △2 | 6/84 | Pad Elevation Revisions |

REVISIONS

CONNECTICUT
DEPARTMENT OF TRANSPORTATION
EAST HARTFORD – MANCHESTER
RECONSTRUCTION OF INTERSTATE ROUTE 84
E.B. & W.B. ROADWAYS
UNDER
SIMMONS ROAD
ABUTMENT – 2

ENGINEER DE LEUW CATHER & COMPANY
DESIGNER E.S. DRAFTSMAN T.G. CHECKER J.S.
APPROVED DATE
STRUCTURE NO. 42-213-1 BRIDGE LOG NO. STRUCTURE SHEET NO. 5 OF 32

42-213

514 01 FOR INFORMATION ONLY 323

| REV. | DATE | REVISION DESCRIPTION |
|---|---|---|
| - | - | - |
| - | - | - |
| - | - | - |
| - | - | - |
| - | - | - |
| - | - | - |
| - | - | - |

THE INFORMATION, INCLUDING ESTIMATED QUANTITIES OF WORK, SHOWN ON THESE SHEETS IS BASED ON LIMITED INVESTIGATIONS BY THE STATE AND IS IN NO WAY WARRANTED TO INDICATE THE CONDITIONS OF ACTUAL QUANTITIES OF WORK WHICH WILL BE REQUIRED.

NOT TO SCALE

STATE OF CONNECTICUT
DEPARTMENT OF TRANSPORTATION

SIGNATURE/BLOCK: OFFICE OF ENGINEERING
APPROVED BY:

PROJECT TITLE: REPLACEMENT OF OVERHEAD SIGN SUPPORTS ON VARIOUS ROUTES STATEWIDE

TOWN: VARIOUS

DRAWING TITLE: FOR INFORMATION ONLY

PROJECT NO. 170-3303
DRAWING NO. FIO-7
SHEET NO. 010.07

FORM NO. ENG 158 ED 1-76

| FHWA REGION | STATE | TOWN | FED. AID PROJ. NO. | PROJ. NO. | YEAR | ROUTE NO. | SHEET NO. | TOTAL SHEETS |
|---|---|---|---|---|---|---|---|---|
| 1 | CONN. | E.HARTFORD-MANCHESTER | I84-4(105)65 | 42-213 | 1983 | I84/186 | 324 | 1020 |

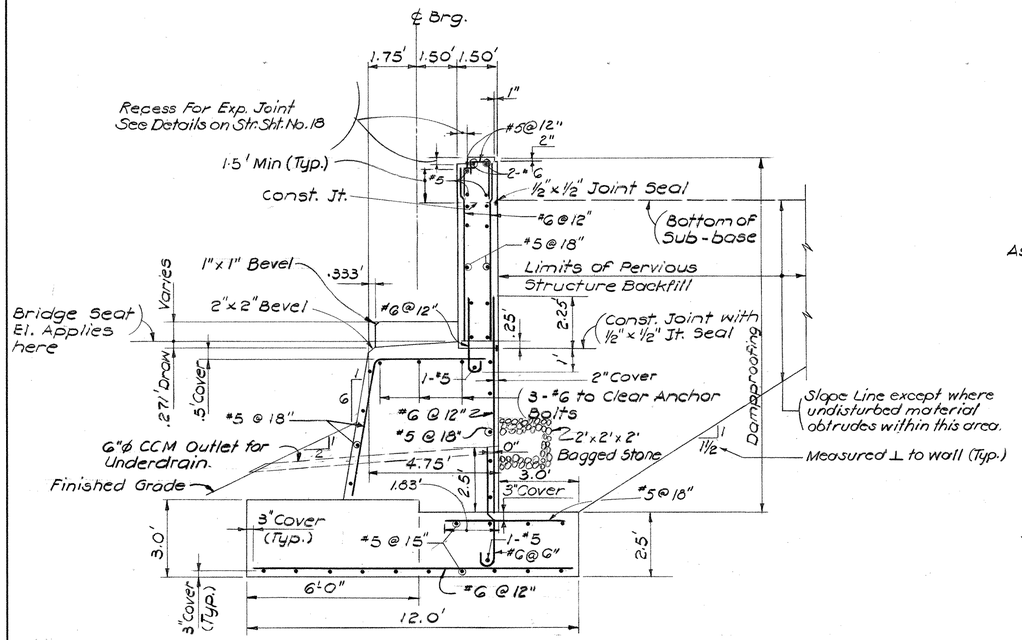


TYPICAL ABUTMENT SECTION
Scale: 3/8" = 1'-0"

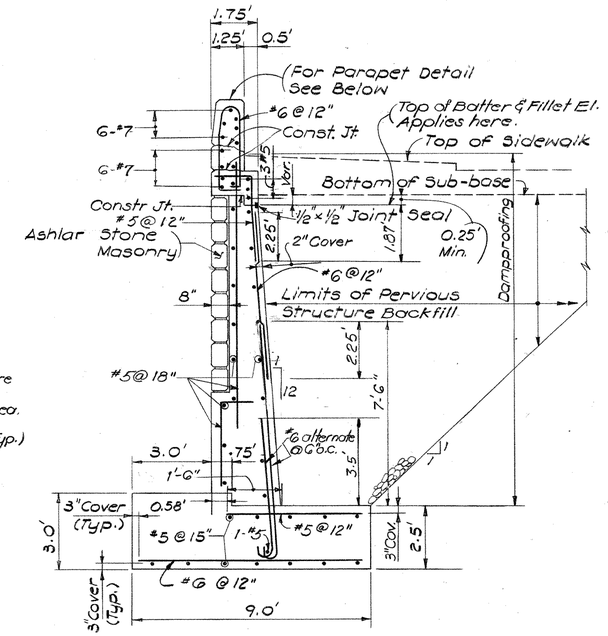


TYPICAL WINGWALL SECTION
Scale: 3/8" = 1'-0"

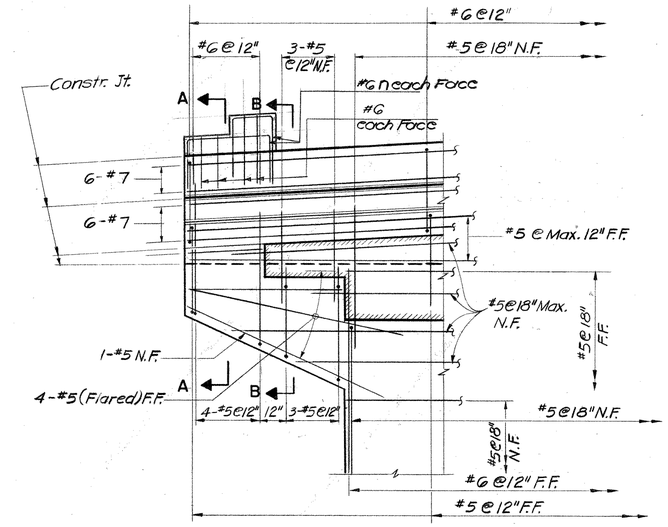


FLYING WING DETAILS
Scale: 3/8" = 1'-0"

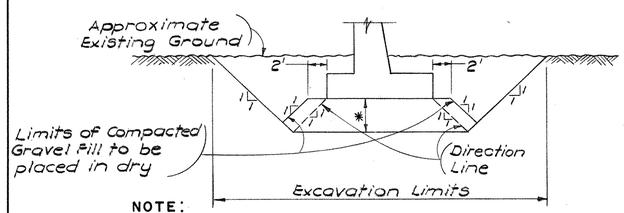


NOTE:

*2' Min; Remove unsuitable material to depth and extent as ordered by the Engineer.

FOUNDATION DETAIL
(For Abutments & Wingwalls)
Not to Scale

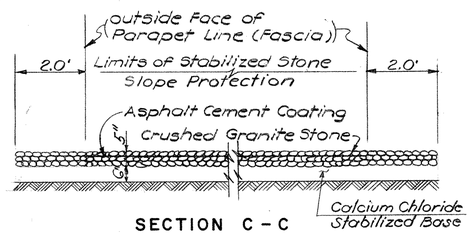


SECTION C - C

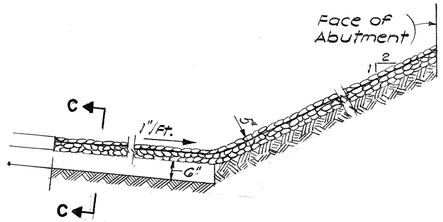


STABILIZED STONE SLOPE PROTECTION
Scale: 1/2" = 1'-0"

Actual Design Foundation Pressure for AASHTO Group I is 1.5 Tons Square Foot.

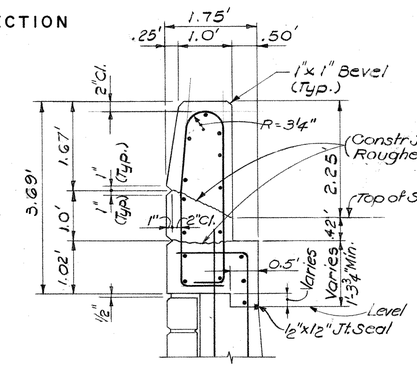


PARAPET DETAIL
Scale: 3/4" = 1'-0"

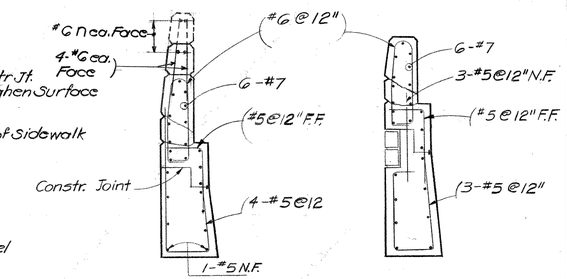


SECTION A - A
Scale: 3/8" = 1'-0"

SECTION B - B
Scale: 3/8" = 1'-0"

THE INFORMATION, INCLUDING ESTIMATED QUANTITIES OF WORK SHOWN ON THESE SHEETS IS BASED ON LIMITED INVESTIGATIONS BY THE STATE AND IS IN NO WAY WARRANTED TO INDICATE THE TRUE CONDITIONS OR ACTUAL QUANTITIES OR DISTRIBUTION OF QUANTITIES OF WORK WHICH WILL BE REQUIRED.

| NO. | DATE | DESCRIPTION |
|---|---|---|
| | | |
| | | |
| | | |
| | | |
| | | |

REVISIONS

# CONNECTICUT
DEPARTMENT OF TRANSPORTATION

EAST HARTFORD - MANCHESTER

RECONSTRUCTION OF INTERSTATE ROUTE 84
E.B. & W.B. ROADWAYS
UNDER
SIMMONS ROAD

ABUTMENT DETAILS

ENGINEER DE LEUW CATHER & COMPANY
DESIGNER J.C. | DRAFTSMAN T.S.G. | CHECKER E.S.
APPROVED | DATE
STRUCTURE NO. 42-213-1 | BRIDGE LOG NO. | STRUCTURE SHEET NO. 6 OF 32

42-213

514 01

FOR INFORMATION ONLY

324

| REV. | DATE | REVISION DESCRIPTION |
|---|---|---|
| - | - | - |
| - | - | - |
| - | - | - |
| - | - | - |
| - | - | - |
| - | - | - |
| - | - | - |
| - | - | - |

THE INFORMATION, INCLUDING ESTIMATED QUANTITIES OF WORK, SHOWN ON THESE SHEETS IS BASED ON LIMITED INVESTIGATIONS BY THE STATE AND IS IN NO WAY WARRANTED TO INDICATE THE CONDITIONS OF ACTUAL QUANTITIES OF WORK WHICH WILL BE REQUIRED.

NOT TO SCALE

STATE OF CONNECTICUT
DEPARTMENT OF TRANSPORTATION

SIGNATURE/BLOCK: OFFICE OF ENGINEERING
APPROVED BY:

PROJECT TITLE: REPLACEMENT OF OVERHEAD SIGN SUPPORTS ON VARIOUS ROUTES STATEWIDE

TOWN: VARIOUS

DRAWING TITLE: FOR INFORMATION ONLY

PROJECT NO. 170-3303
DRAWING NO. FIO-8
SHEET NO. 010.08

FORM NO. ENG. 15A ED. 1-75

| F.H.W.A. REGION | STATE | TOWN | FED. AID PROJ. NO. | PROJ. NO. | YEAR | ROUTE NO. | SHEET NO. | TOTAL SHEETS |
|---|---|---|---|---|---|---|---|---|
| 1 | CONN. | E.HARTFORD-MANCHESTER | I-84-4(105)65 | 42-213 | 1983 | I-84/186 | 325 | 1020 |

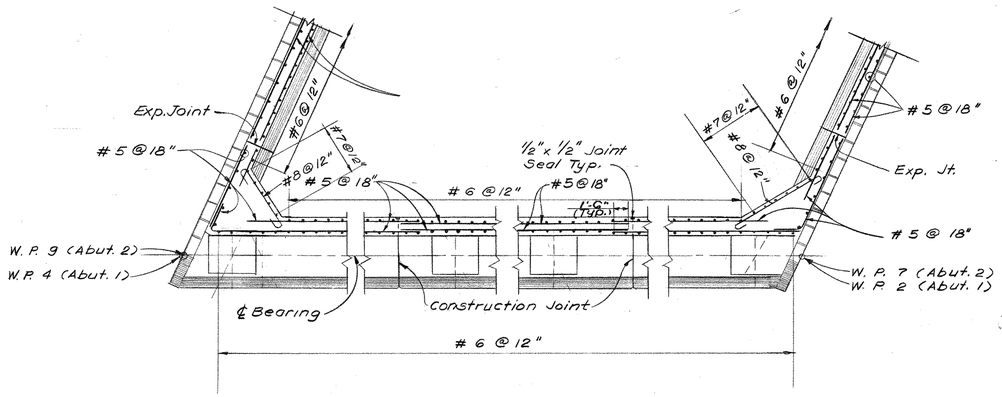


**SECTION A-A**
Scale 3/16" = 1'-0"

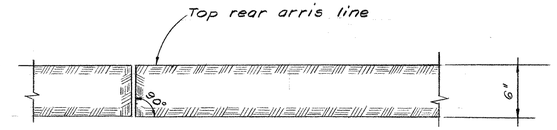


**PLAN**
Scale 1'2" = 1'-0"

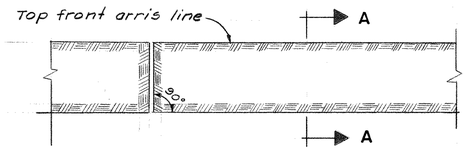


**ELEVATION**
Scale 1'2" = 1'-0"

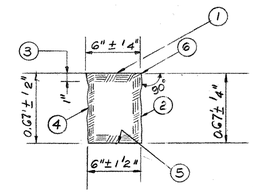


**SECTION A-A**
Scale 1'2" = 1'-0"

## GRANITE CURB TOLERANCE NOTES:

1. Sawed surface approximating a true plane with no projections or depressions greater than 1/4".
2. Smooth, quarry split surface, free of drill holes, with projection or depression not over 1/2".
3. No projection or depression within this area greater than 1/4".
4. Split surface shall be free of any projections over 1".
5. Sawed or split surface approximating a true plane to the specified dimensions with projection no greater than 1/4".
6. These arris lines shall be straight and true within a ± tolerance of 1/4".

Note:
For additional curb Details see Sh. 17.

## 6" GRANITE STONE CURBING FOR BRIDGES
(TOLERANCE DETAILS)

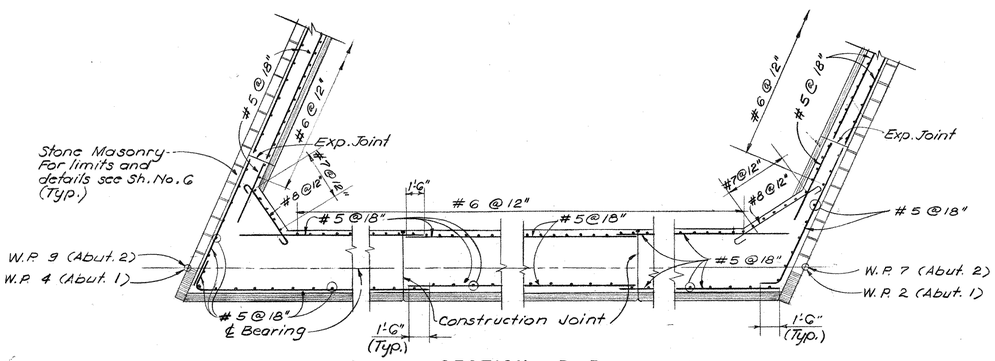


**SECTION B-B**
Scale 3/16" = 1'-0"

NOTE:
For location of Sections A-A & B-B see Shts. 4 & 5.

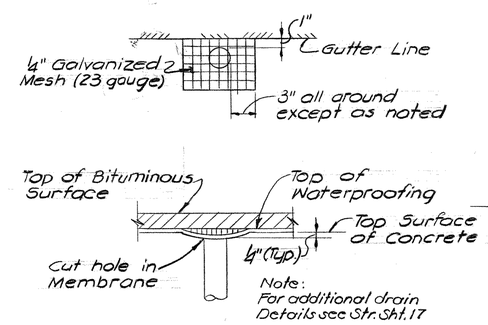


**TYPICAL DRAIN DETAIL**
N.T.S.

Note:
Payment for furnishing and installing galvanized mesh shall be included in the contract unit price per linear foot for 1 1/2" ϕ PVC plastic pipe drains.

For location of Drains see Deck Plan Str. Sht. 10

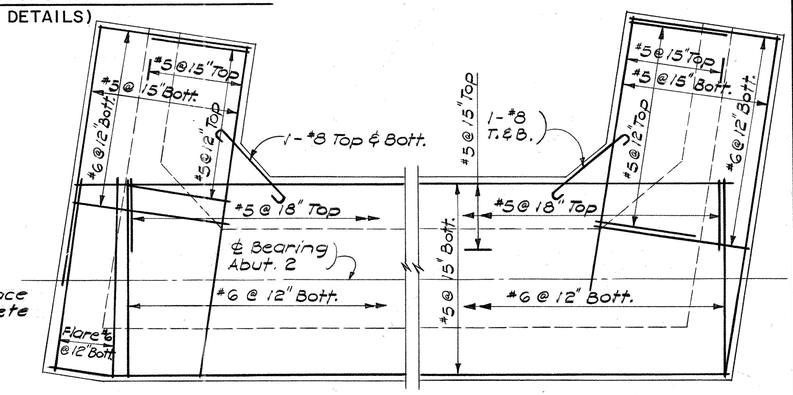


**ABUTMENT FOOTING REINFORCING PLAN**
Scale: 1/4" = 1'-0"
(Abut. 2 As Shown
Abut. 1 Similar)

THE INFORMATION, INCLUDING ESTIMATED QUANTITIES OF WORK SHOWN ON THESE SHEETS IS BASED ON LIMITED INVESTIGATIONS BY THE STATE AND IS IN NO WAY WARRANTED TO INDICATE THE TRUE CONDITIONS OR ACTUAL QUANTITIES OR DISTRIBUTION OF QUANTITIES OF WORK WHICH WILL BE REQUIRED.

| NO. | DATE | DESCRIPTION |
|---|---|---|
| | | |
| | | |
| | | |
| | | |
| | | |

REVISIONS

CONNECTICUT
DEPARTMENT OF TRANSPORTATION

EAST HARTFORD — MANCHESTER

RECONSTRUCTION OF INTERSTATE ROUTE 84
E.B. & W.B. ROADWAYS
UNDER
SIMMONS ROAD

MISCELLANEOUS DETAILS

ENGINEER DE LEUW CATHER & COMPANY
DESIGNER E.S. | DRAFTSMAN A. A. | CHECKER J.C.
APPROVED | DATE
STRUCTURE NO. 42-213-1 | BRIDGE LOG NO. | STRUCTURE SHEET NO. 7 OF 32

42-213

514 01 FOR INFORMATION ONLY 325

| REV. | DATE | REVISION DESCRIPTION |
|---|---|---|
| - | - | - |
| - | - | - |
| - | - | - |
| - | - | - |
| - | - | - |
| - | - | - |
| - | - | - |

THE INFORMATION, INCLUDING ESTIMATED QUANTITIES OF WORK, SHOWN ON THESE SHEETS IS BASED ON LIMITED INVESTIGATIONS BY THE STATE AND IS IN NO WAY WARRANTED TO INDICATE THE CONDITIONS OF ACTUAL QUANTITIES OF WORK WHICH WILL BE REQUIRED.

NOT TO SCALE

STATE OF CONNECTICUT
DEPARTMENT OF TRANSPORTATION

SIGNATURE/BLOCK: OFFICE OF ENGINEERING
APPROVED BY:

PROJECT TITLE: REPLACEMENT OF OVERHEAD SIGN SUPPORTS ON VARIOUS ROUTES STATEWIDE

TOWN: VARIOUS

DRAWING TITLE: FOR INFORMATION ONLY

PROJECT NO. 170-3303
DRAWING NO. FIO-9
SHEET NO. 010.09

FORM NO. ENG 15A ED 1-75

| F.H.W.A. REGION | STATE | TOWN | FED. AID PROJ. NO. | PROJ. NO. | YEAR | ROUTE NO. | SHEET NO. | TOTAL SHEETS |
|---|---|---|---|---|---|---|---|---|
| 1 | CONN. | E.HARTFORD-MANCHESTER | I-84-4(105)65 | 42-213 | 1983 | I84/186 | 326 | 1027 |

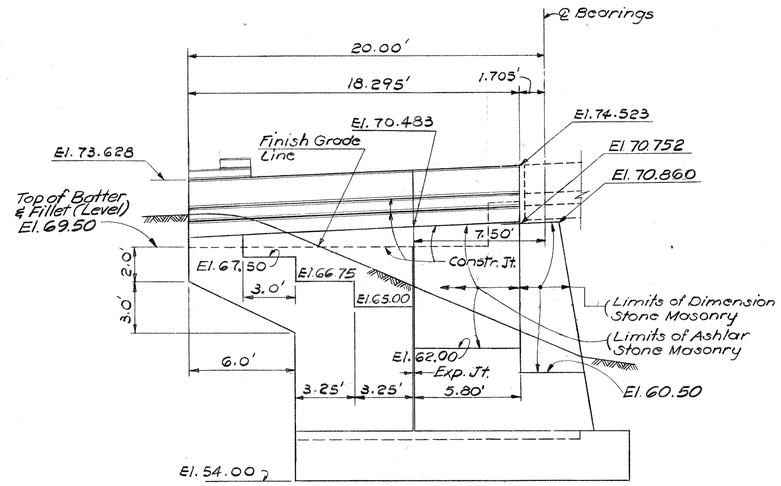


ELEVATION WING IB
Scale: 1/4" = 1'-0"

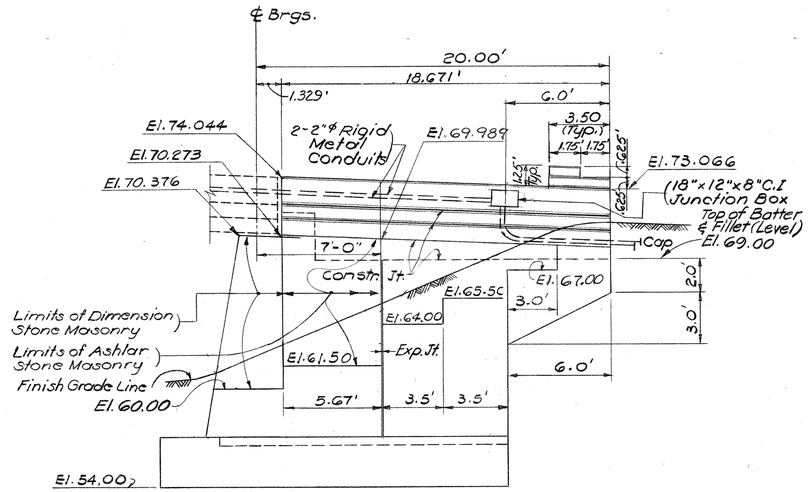


ELEVATION WING IA
Scale: 1/4" = 1'-0"

NOTE:
For Granite curb tolerances See Structural Sh. # 7

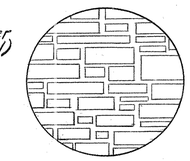

TYPICAL STONE PATTERN

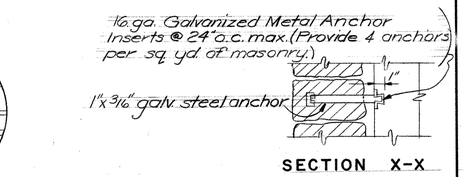


SECTION X-X

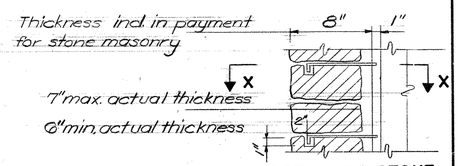


DETAIL OF STONE ANCHORAGE

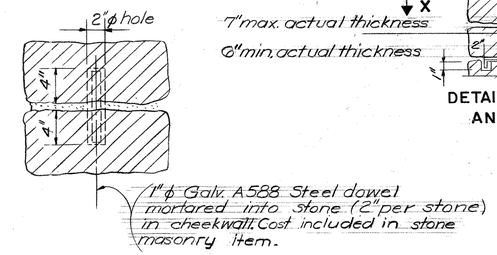


VERTICAL DOWEL DETAIL

STONE MASONRY DETAIL
No Scale

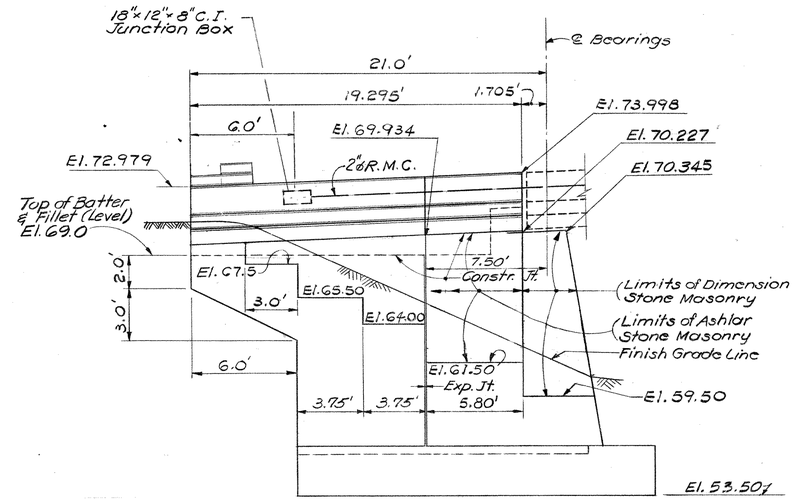


ELEVATION WING 2A
Scale: 1/4" = 1'-0"

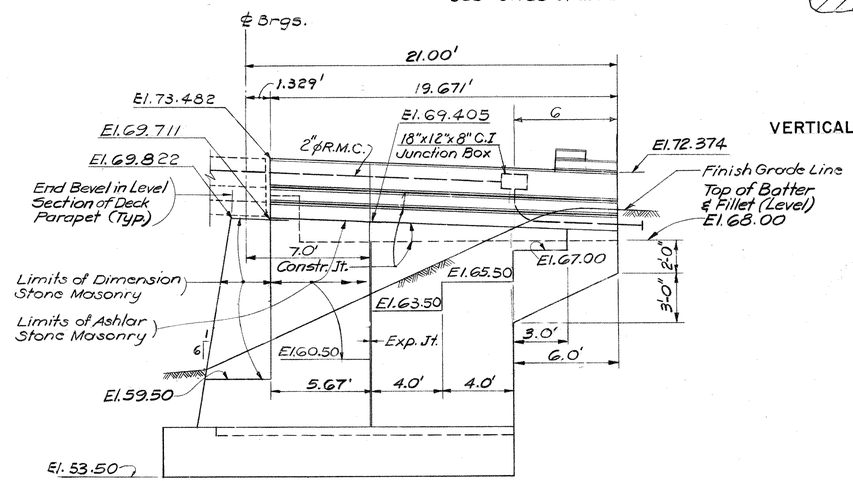


ELEVATION WING 2B
Scale: 1/4" = 1'-0"

Design Foundation Pressure for Wingwalls is 2.0 T/S.F.

NOTES:

For Beam Rail Anchorage Details see Str. Sh. No 18
For Railing spacing on the wings see Slab plan and Sections" Str. Sheet No. 16.
For Plan and Elevation of Abutments See Str. Sheet No. 4 and No. 5.
For Cantilevered Wingwall Detail See Str. Sheet No. 6
For Foundation Detail see Str. Sh. 6
For Non-Keyed Expansion Joint see Str. Sh. 4.

THE INFORMATION, INCLUDING ESTIMATED QUANTITIES OF WORK SHOWN ON THESE SHEETS IS BASED ON LIMITED INVESTIGATIONS BY THE STATE AND IS IN NO WAY WARRANTED TO INDICATE THE TRUE CONDITIONS OR ACTUAL QUANTITIES OR DISTRIBUTION OF QUANTITIES OF WORK WHICH WILL BE REQUIRED.

| NO. | DATE | DESCRIPTION |
|---|---|---|
| | | |
| | | |
| | | |
| | | |
| | | |

REVISIONS

CONNECTICUT
DEPARTMENT OF TRANSPORTATION

EAST HARTFORD MANCHESTER

RECONSTRUCTION OF INTERSTATE ROUTE 84
E.B. & W.B. ROADWAYS
UNDER
SIMMONS ROAD

WINGWALLS

ENGINEER DE LEUW CATHER & COMPANY
DESIGNER E.S. | DRAFTSMAN C.O | CHECKER J.C.
APPROVED | DATE
STRUCTURE NO. 42-213-1 | BRIDGE LOG NO. | STRUCTURE SHEET NO. 8 OF 32

42-213

514 01 FOR INFORMATION ONLY 326

| REV. | DATE | REVISION DESCRIPTION |
|---|---|---|
| - | - | - |
| - | - | - |
| - | - | - |
| - | - | - |
| - | - | - |
| - | - | - |
| - | - | - |

THE INFORMATION, INCLUDING ESTIMATED QUANTITIES OF WORK, SHOWN ON THESE SHEETS IS BASED ON LIMITED INVESTIGATIONS BY THE STATE AND IS IN NO WAY WARRANTED TO INDICATE THE CONDITIONS OF ACTUAL QUANTITIES OF WORK WHICH WILL BE REQUIRED.

NOT TO SCALE

STATE OF CONNECTICUT
DEPARTMENT OF TRANSPORTATION

SIGNATURE/BLOCK: OFFICE OF ENGINEERING
APPROVED BY:

PROJECT TITLE: REPLACEMENT OF OVERHEAD SIGN SUPPORTS ON VARIOUS ROUTES STATEWIDE

TOWN: VARIOUS

DRAWING TITLE: FOR INFORMATION ONLY

PROJECT NO. 170-3303
DRAWING NO. FIO-10
SHEET NO. 010.010

FORM NO. ENG 15A ED 1-75

| FHWA REGION | STATE | TOWN | FED. AID PROJ. NO. | PROJ. NO. | YEAR | ROUTE NO. | SHEET NO. | TOTAL SHEETS |
|---|---|---|---|---|---|---|---|---|
| 1 | CONN. | E.HARTFORD-MANCHESTER | I-84-4(105)65 | 42-213 | 1983 | I-84/186 | 327 | 1020 |

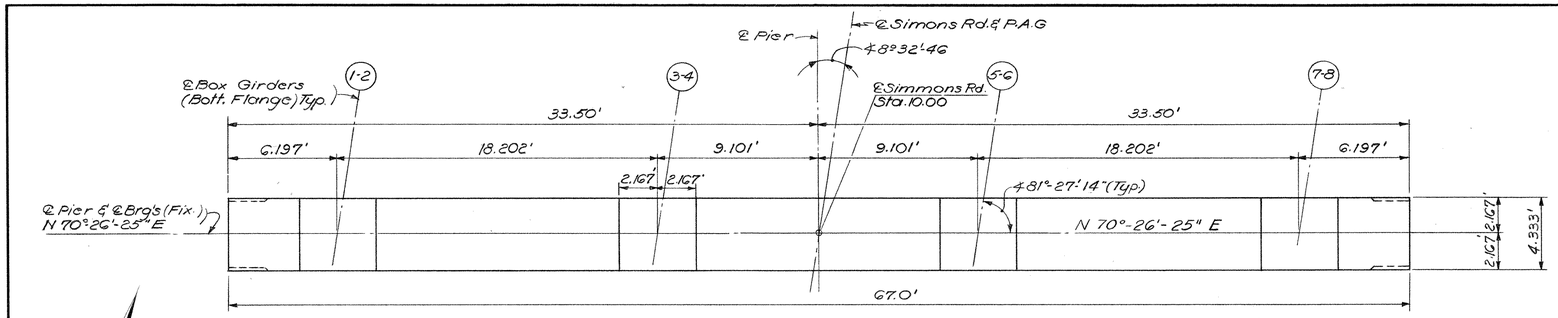


TOP PLAN
Scale: 1/4" = 1'-0"

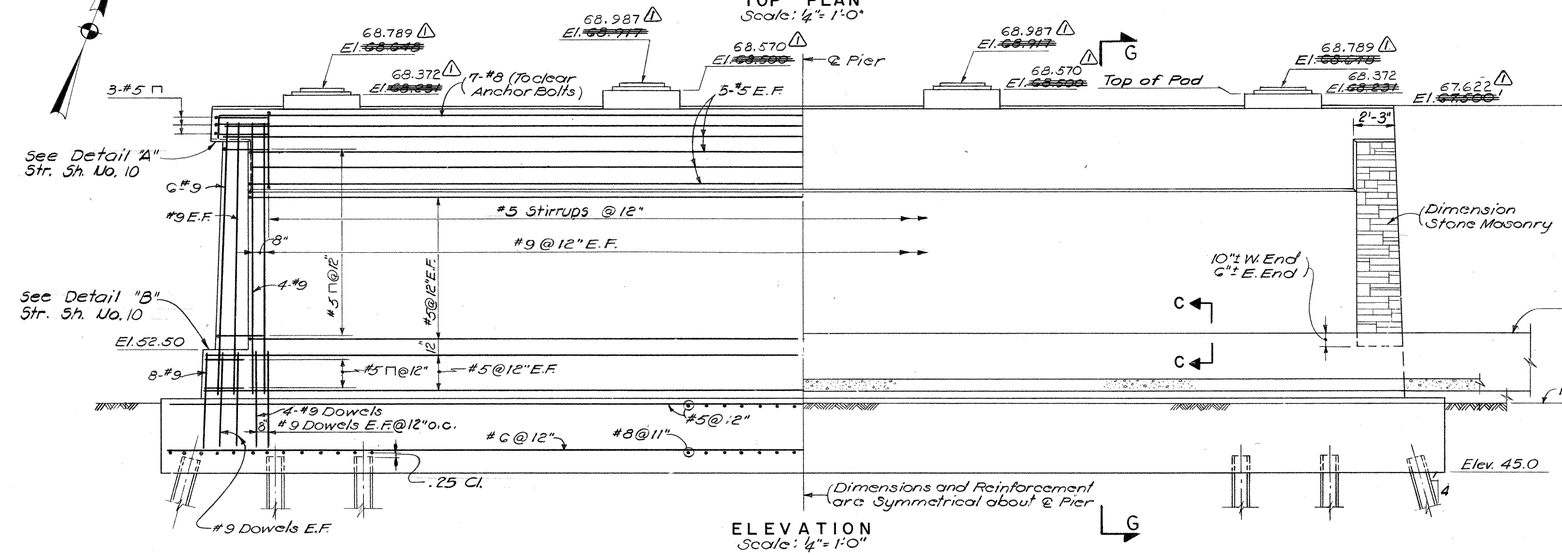


ELEVATION
Scale: 1/4" = 1'-0"

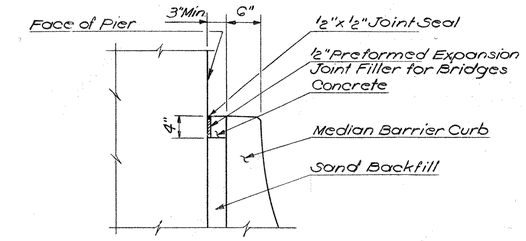


SECTION C-C
Scale: 1" = 1'-0"

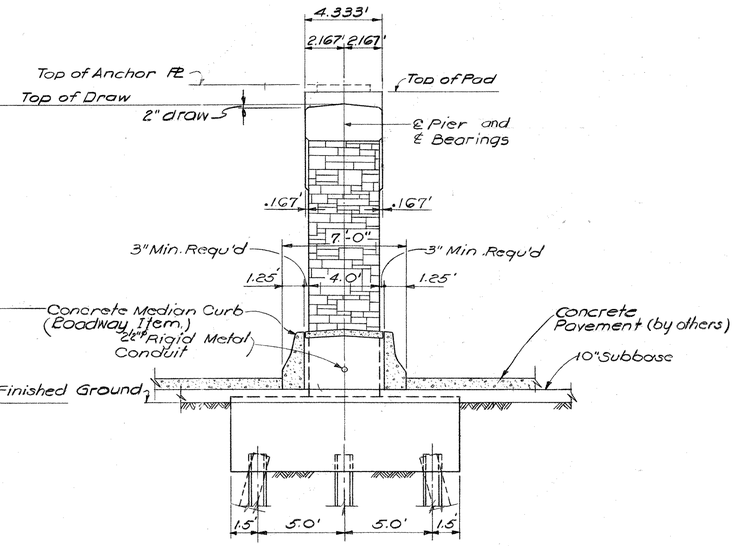


END ELEVATION
Scale: 1/4" = 1'-0"

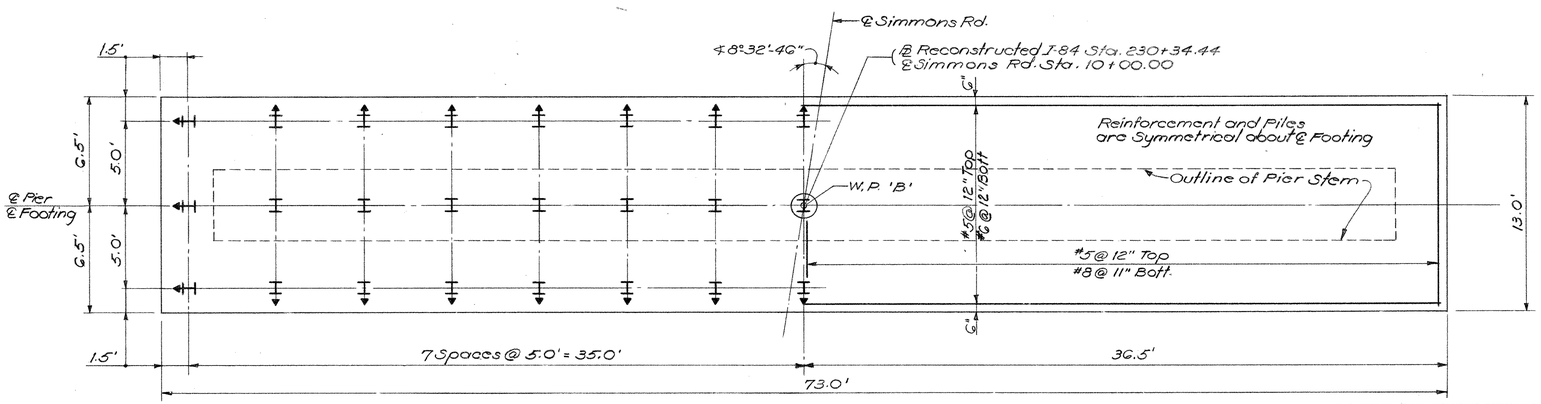


FOOTING PLAN

PILE NOTES:
Piles shall be Driven to Refusal on rock as directed by the Engineer
For Pile Details See Str. Sht. #10
All Piles are HP 12x53
I Denotes Vertical Pile
I Denotes Battered Pile
(I) Denotes Test Pile

Maximum Pile Load = 90 T
Estimated Average Pile Length in Ft.
Vertical Piles = 115
Batter Piles = 119
Test Pile = 130

NOTES:
For Pile Splices and Point Reinf. see Str. Sh. #10
For Section G-G see Structural Sheet # 10
For details "A" and "B" see Structural Sheet #13
Actual Design Pile Load for AASHTO Group I is 56 Tons/Pile.

THE INFORMATION, INCLUDING ESTIMATED QUANTITIES OF WORK SHOWN ON THESE SHEETS IS BASED ON LIMITED INVESTIGATIONS BY THE STATE AND IS IN NO WAY WARRANTED TO INDICATE THE TRUE CONDITIONS OR ACTUAL QUANTITIES OR DISTRIBUTION OF QUANTITIES OF WORK WHICH WILL BE REQUIRED.

| NO. | DATE | DESCRIPTION |
|---|---|---|
| 1 | 6/84 | Revised Pad Elevations. |

REVISIONS

CONNECTICUT
DEPARTMENT OF TRANSPORTATION
EAST HARTFORD — MANCHESTER
RECONSTRUCTION OF INTERSTATE ROUTE 84
E.B. & W.B. ROADWAYS
UNDER
SIMMONS ROAD
PIER

ENGINEER DE LEUW CATHER & COMPANY
DESIGNER J.C. DRAFTSMAN C.O CHECKER E.S
APPROVED DATE
STRUCTURE NO. 42-213-1 BRIDGE LOG NO. STRUCTURE SHEET NO. 9 OF 32

42-213

514 01 FOR INFORMATION ONLY 327

| REV. | DATE | REVISION DESCRIPTION |
|---|---|---|
| - | - | - |
| - | - | - |
| - | - | - |
| - | - | - |
| - | - | - |
| - | - | - |
| - | - | - |

THE INFORMATION, INCLUDING ESTIMATED QUANTITIES OF WORK, SHOWN ON THESE SHEETS IS BASED ON LIMITED INVESTIGATIONS BY THE STATE AND IS IN NO WAY WARRANTED TO INDICATE THE CONDITIONS OR ACTUAL QUANTITIES OF WORK WHICH WILL BE REQUIRED.

NOT TO SCALE

STATE OF CONNECTICUT
DEPARTMENT OF TRANSPORTATION

SIGNATURE/BLOCK: OFFICE OF ENGINEERING
APPROVED BY:

PROJECT TITLE: REPLACEMENT OF OVERHEAD SIGN SUPPORTS ON VARIOUS ROUTES STATEWIDE

TOWN: VARIOUS

DRAWING TITLE: FOR INFORMATION ONLY

PROJECT NO. 170-3303
DRAWING NO. FIO-11
SHEET NO. 010.011

FORM NO. ENG. 15A ED. 1-75

| F.H.W.A. REGION | STATE | TOWN | FED. AID PROJ. NO. | PROJ. NO. | YEAR | ROUTE NO. | SHEET NO. | TOTAL SHEETS |
|---|---|---|---|---|---|---|---|---|
| 1 | CONN. | E. HARTFORD-MANCHESTER | I-84-4(105)65 | 42-213 | 1983 | I-84/186 | 328 | 1020 |

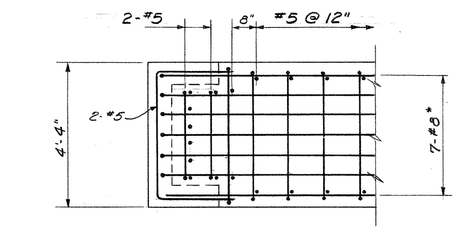


SECTION B-B

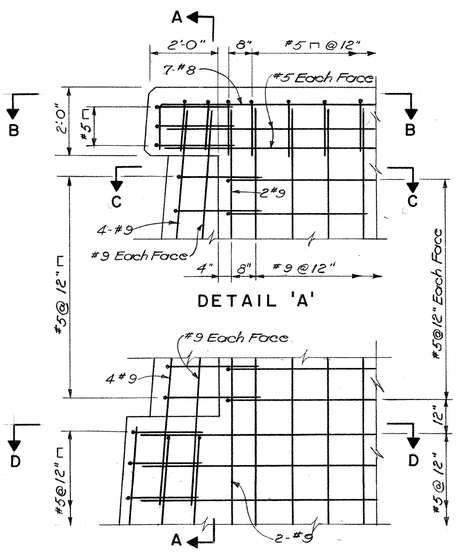


DETAIL 'A'

DETAIL 'B'

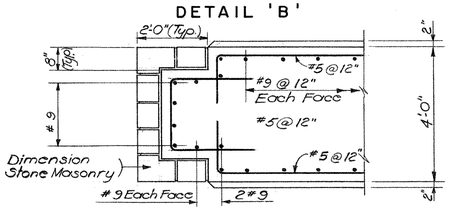


SECTION C-C

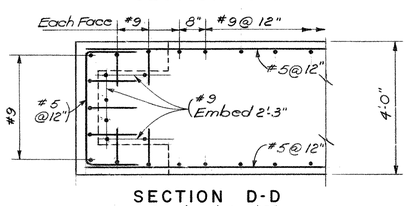


SECTION D-D
Scale: 1/2" = 1'-0"

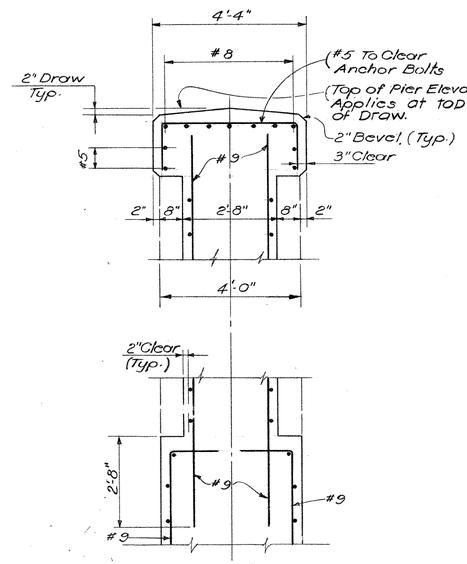


SECTION A-A
Scale: 1/2" = 1'-0"

NOTE:
For Location of Details A & B and Section G-G see Str. Sh. 9

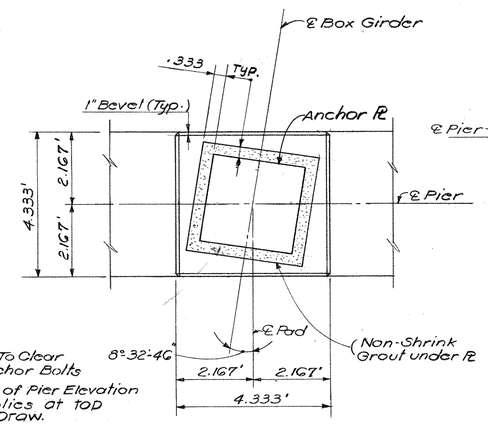


PLAN

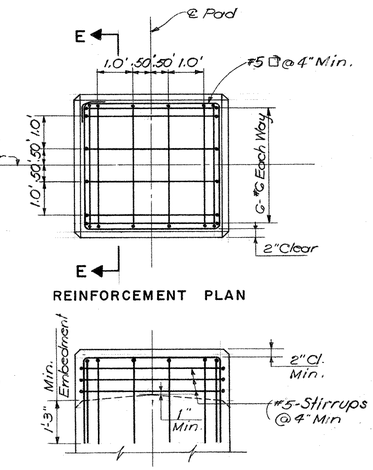


REINFORCEMENT PLAN

SECTION E-E

PIER PAD DETAILS
Scale: 1/2" = 1'-0"

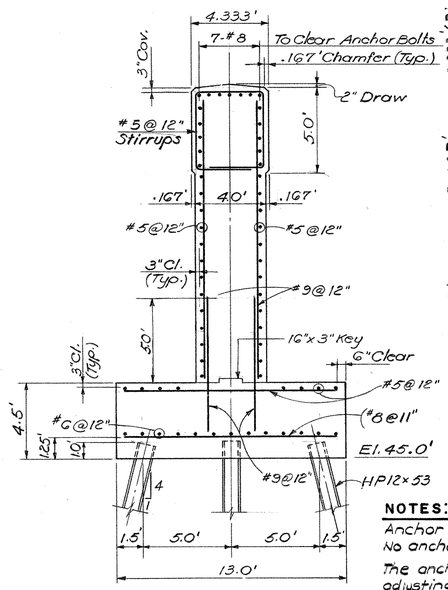


SECTION G-G
Scale: 1/4" = 1'-0"

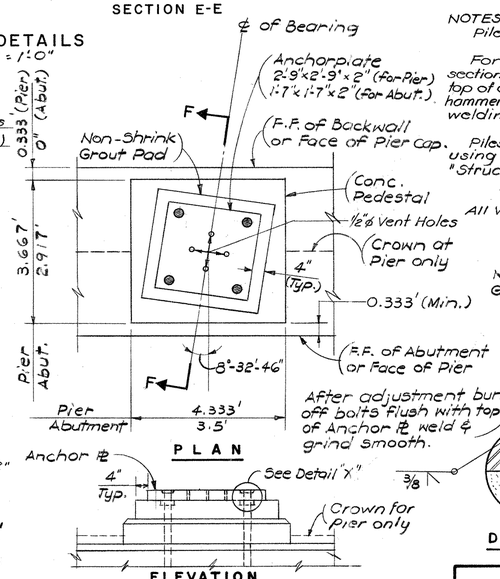


NOTES:
Anchor bolts shall be cast monolithic with the substructure. No anchor bolt forms shall be used.
The anchor ℞ shall be set to the correct elevation, leveled by adjusting the leveling nuts and the anchor bolts shall be burned off, welded and ground smooth as shown on detail.
The base ℞ of bearing shall be welded to anchor ℞ after the bearings are correctly located.

ANCHOR PLATE DETAILS

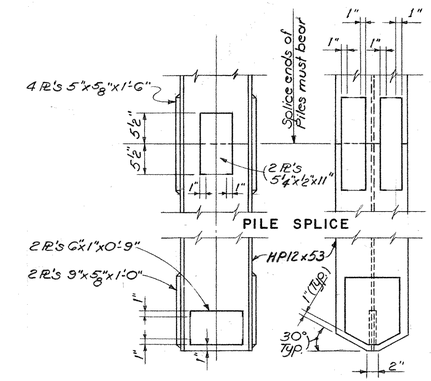


STEEL H-PILES DETAIL
Scale: 1" = 1'-0"

NOTES:
Piles shall not be spliced except with Engineer's approval

For piles to be spliced during installation, the upper pile section, with splice plates attached, shall be set in place on top of driven section, and tapped several times with the hammer to improve the bearing contact, after which welding shall be completed.

Piles to be spliced before driving shall be welded by using a 100% single bevel, butt weld all around, as per "Structural welding Code", A.W.S. D1. 1-80

All Welding to be 3/8" continuous fillet.

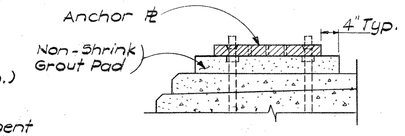


SECTION F-F

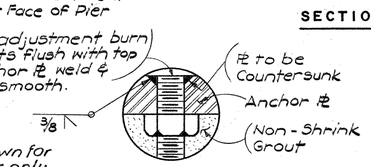


DETAIL "X"

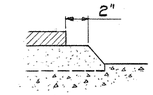


ALTERNATE PAD

THE INFORMATION, INCLUDING ESTIMATED QUANTITIES OF WORK SHOWN ON THESE SHEETS IS BASED ON LIMITED INVESTIGATIONS BY THE STATE AND IS IN NO WAY WARRANTED TO INDICATE THE TRUE CONDITIONS OR ACTUAL QUANTITIES OR DISTRIBUTION OF QUANTITIES OF WORK WHICH WILL BE REQUIRED.

| NO. | DATE | DESCRIPTION |
|---|---|---|
| | | |
| | | |
| | | |
| | | |
| | | |

REVISIONS

CONNECTICUT
DEPARTMENT OF TRANSPORTATION

EAST HARTFORD – MANCHESTER

RECONSTRUCTION OF INTERSTATE ROUTE 84
E.B. & W.B. ROADWAYS
UNDER
SIMMONS ROAD

PIER DETAILS

ENGINEER DE LEUW CATHER & COMPANY
DESIGNER J.C. DRAFTSMAN T.S.G. CHECKER E.S
APPROVED DATE
STRUCTURE NO. 42-213-1 BRIDGE LOG NO. STRUCTURE SHEET NO. 10 OF 32

42-213

514 01 FOR INFORMATION ONLY 328

| REV. | DATE | REVISION DESCRIPTION |
|---|---|---|
| - | - | - |
| - | - | - |
| - | - | - |
| - | - | - |
| - | - | - |
| - | - | - |
| - | - | - |

THE INFORMATION, INCLUDING ESTIMATED QUANTITIES OF WORK, SHOWN ON THESE SHEETS IS BASED ON LIMITED INVESTIGATIONS BY THE STATE AND IS IN NO WAY WARRANTED TO INDICATE THE CONDITIONS OF ACTUAL QUANTITIES OF WORK WHICH WILL BE REQUIRED.

NOT TO SCALE

STATE OF CONNECTICUT
DEPARTMENT OF TRANSPORTATION

SIGNATURE/BLOCK: OFFICE OF ENGINEERING
APPROVED BY:

PROJECT TITLE: REPLACEMENT OF OVERHEAD SIGN SUPPORTS ON VARIOUS ROUTES STATEWIDE

TOWN: VARIOUS

DRAWING TITLE: FOR INFORMATION ONLY

PROJECT NO. 170-3303
DRAWING NO. FIO-12
SHEET NO. 010.012

FORM NO. ENG. 158 ED. 1-75

| F.H.W.A. REGION | STATE | TOWN | FED. AID PROJ. NO. | PROJ. NO. | YEAR | ROUTE NO. | SHEET NO. | TOTAL SHEETS |
|---|---|---|---|---|---|---|---|---|
| 1 | CONN. | E. HARTFORD-MANCHESTER | I-84-4(105)65 | 42-213 | 1983 | I-84/86 | 329 | 1020 |

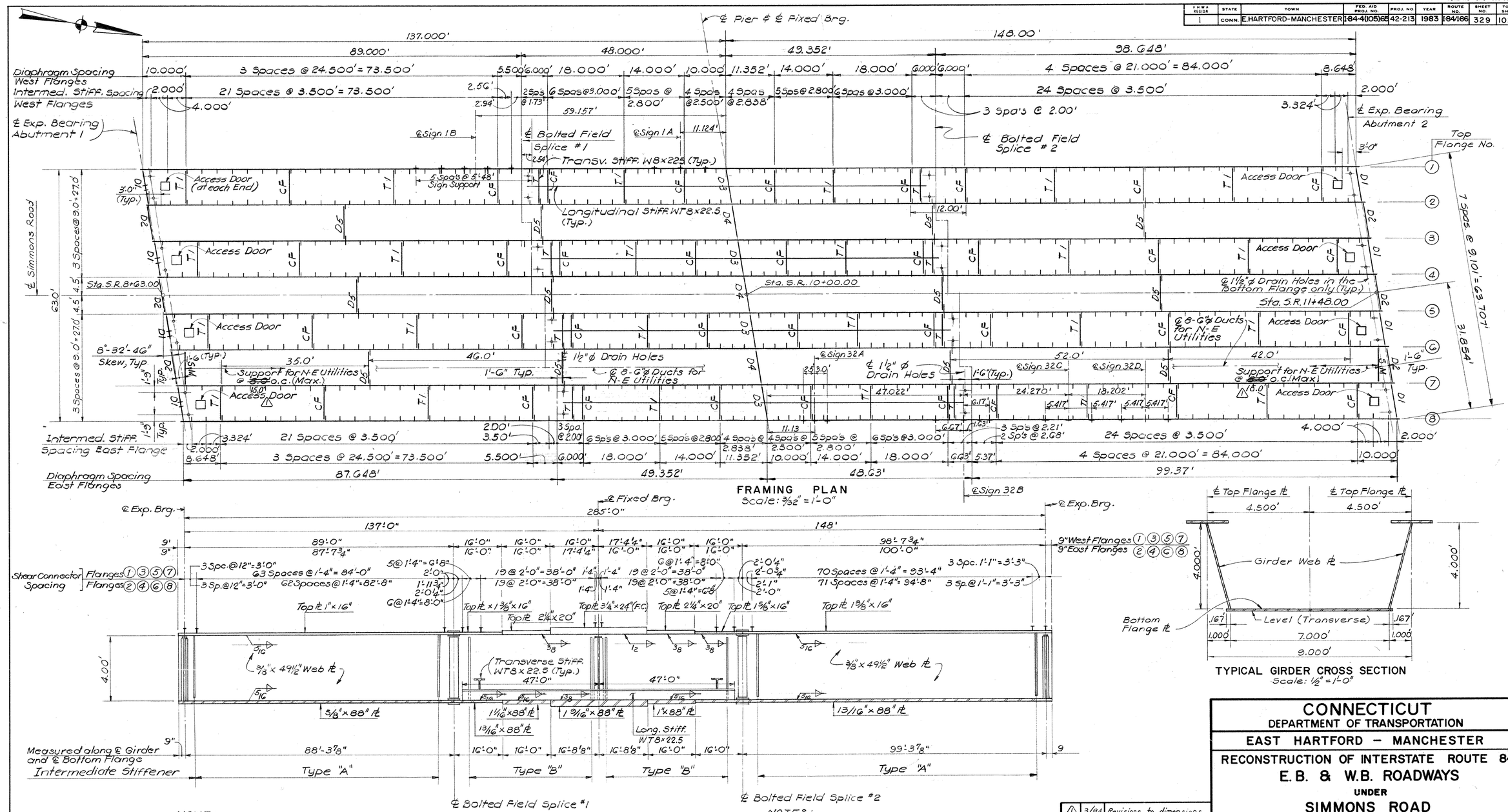


NOTE:
The 3¼" thick Top Flange Plates are Fracture Critical Member Components. 100% of these Member Components shall require Ultrasonic or Radiographic testing.

TYPICAL GIRDER
Not to Scale

NOTES:
For Details of Support Member SM see Str. Sh. 20.
For Diaphragm details see Str. Sh. 12 & 13
For Access Door details see Str. Sh. 13
For Bearing details see Str. Sh. 19
For Steel Notes see Str. Sh. 15
For Stiffener Details See Str. Sh. 12
Remain In Place forms shall be used for deck slab inside the box girder.

| NO. | DATE | DESCRIPTION |
|---|---|---|
| 1 | 3/84 | Revisions to dimensions |

REVISIONS

# CONNECTICUT
DEPARTMENT OF TRANSPORTATION

EAST HARTFORD – MANCHESTER

RECONSTRUCTION OF INTERSTATE ROUTE 84
E.B. & W.B. ROADWAYS
UNDER
SIMMONS ROAD

FRAMING PLAN

ENGINEER DE LEUW CATHER & COMPANY
DESIGNER R.M. DRAFTSMAN Y.K.C. CHECKER E.S.
APPROVED DATE
STRUCTURE NO. 42-213-1 BRIDGE LOG NO. STRUCTURE SHEET NO. 11 OF 32

42-213

514 01 FOR INFORMATION ONLY 329

| REV. | DATE | REVISION DESCRIPTION |
|---|---|---|
| - | - | - |
| - | - | - |
| - | - | - |
| - | - | - |
| - | - | - |
| - | - | - |
| - | - | - |

THE INFORMATION, INCLUDING ESTIMATED QUANTITIES OF WORK, SHOWN ON THESE SHEETS IS BASED ON LIMITED INVESTIGATIONS BY THE STATE AND IS IN NO WAY WARRANTED TO INDICATE THE CONDITIONS OF ACTUAL QUANTITIES OF WORK WHICH WILL BE REQUIRED.

NOT TO SCALE

STATE OF CONNECTICUT
DEPARTMENT OF TRANSPORTATION

SIGNATURE/BLOCK: OFFICE OF ENGINEERING
APPROVED BY:

PROJECT TITLE: REPLACEMENT OF OVERHEAD SIGN SUPPORTS ON VARIOUS ROUTES STATEWIDE

TOWN: VARIOUS

DRAWING TITLE: FOR INFORMATION ONLY

PROJECT NO. 170-3303
DRAWING NO. FIO-13
SHEET NO. 010.013

FORM NO. ENG 158 ED 1-75

| F.H.W.A. REGION | STATE | TOWN | FED. AID PROJ. NO. | PROJ. NO. | YEAR | ROUTE NO. | SHEET NO. | TOTAL SHEETS |
|---|---|---|---|---|---|---|---|---|
| 1 | CONN. | E.HARTFORD-MANCHESTER | I84-4(105)65 | 42-213 | 1983 | I84/186 | 330 | 1020 |

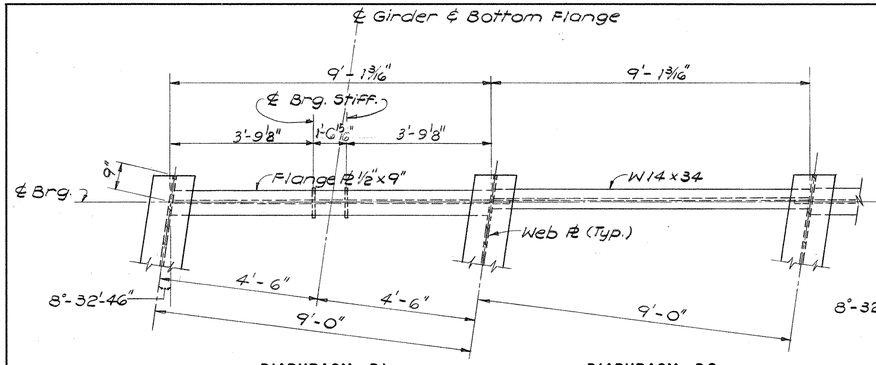


DIAPHRAGM D1 DIAPHRAGM D2

PLAN
Scale: 1/2"=1'-0"

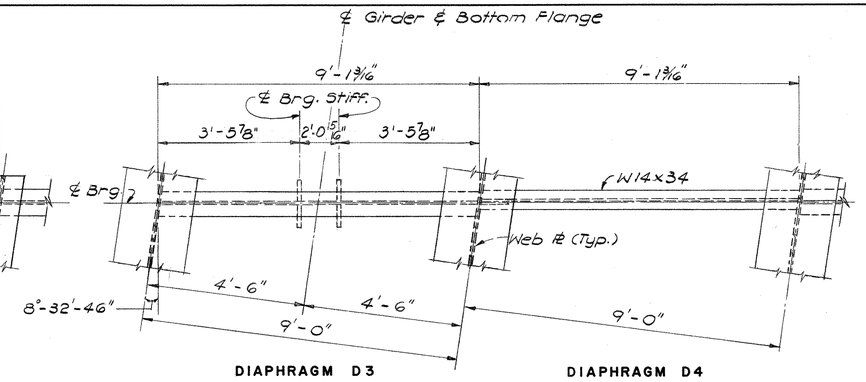


DIAPHRAGM D3 DIAPHRAGM D4

PLAN
Scale: 1/2"=1'-0"

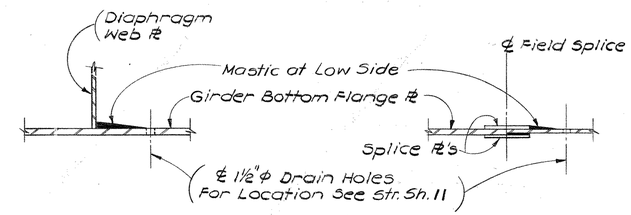


DETAIL AT GIRDER DRAIN

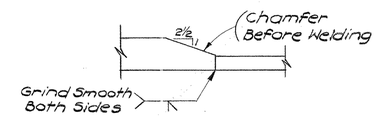


SECTION A-A

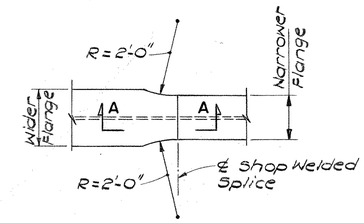


DETAIL OF FLANGE PLATE WIDTH TRANSITION

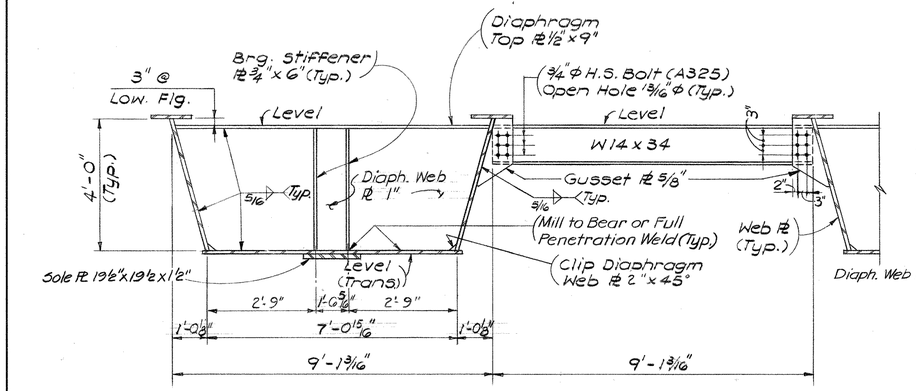


DIAPHRAGM D1 DIAPHRAGM D2

ELEVATION
Scale: 1/2"=1'-0"

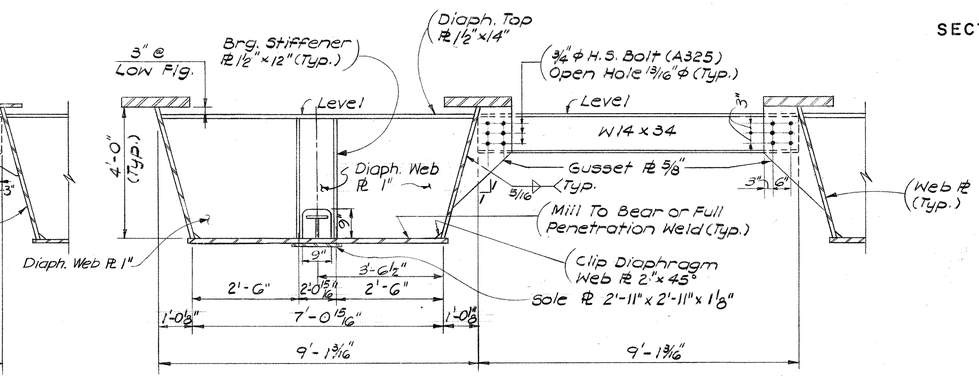


DIAPHRAGM D3 DIAPHRAGM D4

ELEVATION
Scale: 1/2"=1'-0"

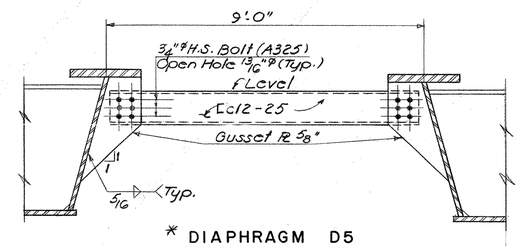


* DIAPHRAGM D5
(To be Removed after Erection)
Scale: 1/2"=1'-0"

*Intermediate Bracing between Girders with bolted connections, Nuts fingertight during entire Slab Pour then tightened after entire Slab Pour is completed.

NOTE:
For Location Of Type "A" & Type "B" Stiffeners, See Str. Sheet 11

NOTE:
For Framing Plan see Str. Sh. 11.

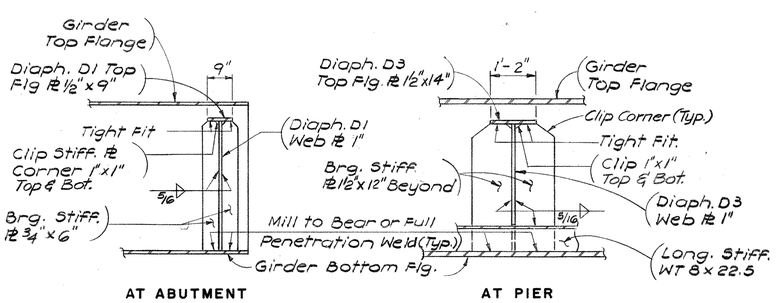


AT ABUTMENT AT PIER

BEARING STIFFENER DETAIL
Scale: 1/2"=1'-0"

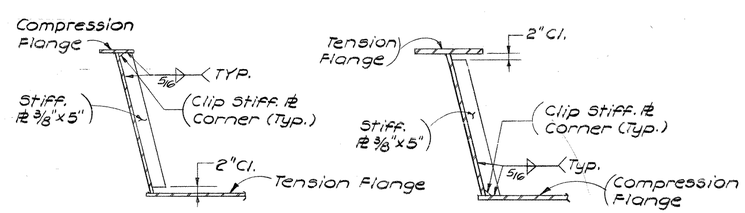


TYPE "A" TYPE "B"

INTERMEDIATE STIFFENER DETAIL
Scale: 1/2"=1'-0"

| NO. | DATE | DESCRIPTION |
|---|---|---|
| | | |
| | | |
| | | |
| | | |
| | | |
| | | |

REVISIONS

CONNECTICUT
DEPARTMENT OF TRANSPORTATION

EAST HARTFORD — MANCHESTER

RECONSTRUCTION OF INTERSTATE ROUTE 84
E.B. & W.B. ROADWAYS
UNDER
SIMMONS ROAD

STRUCTURAL STEEL DETAILS - I

ENGINEER DE LEUW CATHER & COMPANY
DESIGNER R.M. DRAFTSMAN T.G. CHECKER E.S.
APPROVED DATE
STRUCTURE NO. 42-213-1 BRIDGE LOG NO. STRUCTURE SHEET NO. 12 OF 32

42-213

514 01 FOR INFORMATION ONLY 330

| REV. | DATE | REVISION DESCRIPTION |
|---|---|---|
| - | - | - |
| - | - | - |
| - | - | - |
| - | - | - |
| - | - | - |
| - | - | - |
| - | - | - |

THE INFORMATION, INCLUDING ESTIMATED QUANTITIES OF WORK, SHOWN ON THESE SHEETS IS BASED ON LIMITED INVESTIGATIONS BY THE STATE AND IS IN NO WAY WARRANTED TO INDICATE THE CONDITIONS OF ACTUAL QUANTITIES OF WORK WHICH WILL BE REQUIRED.

NOT TO SCALE

STATE OF CONNECTICUT
DEPARTMENT OF TRANSPORTATION

SIGNATURE/BLOCK: OFFICE OF ENGINEERING
APPROVED BY:

PROJECT TITLE: REPLACEMENT OF OVERHEAD SIGN SUPPORTS ON VARIOUS ROUTES STATEWIDE

TOWN: VARIOUS

DRAWING TITLE: FOR INFORMATION ONLY

PROJECT NO. 170-3303
DRAWING NO. FIO-14
SHEET NO. 010.014

FORM NO. ENG 158 ED 1-76

| F.H.W.A. REGION | STATE | TOWN | FED. AID PROJ. NO. | PROJ. NO. | YEAR | ROUTE NO. | SHEET NO. | TOTAL SHEETS |
|---|---|---|---|---|---|---|---|---|
| 1 | CONN. | E.HARTFORD-MANCHESTER | I-84-4(105)65 | 42-213 | 1983 | I-84/186 | 331 | 1020 |

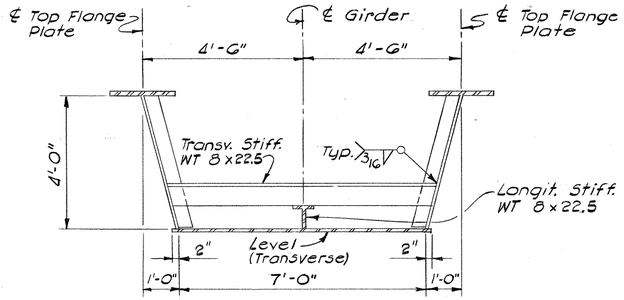


**TRANSVERSE STIFFENER DETAIL**
Scale: 1/2" = 1'-0"

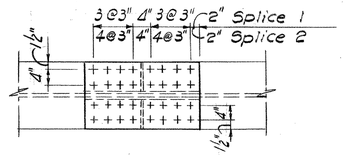


**TOP FLANGE**

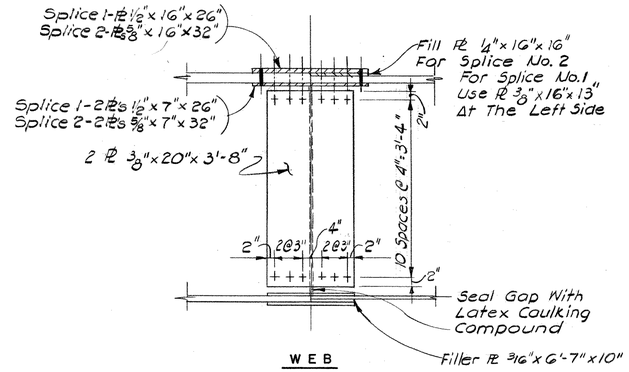


**WEB**

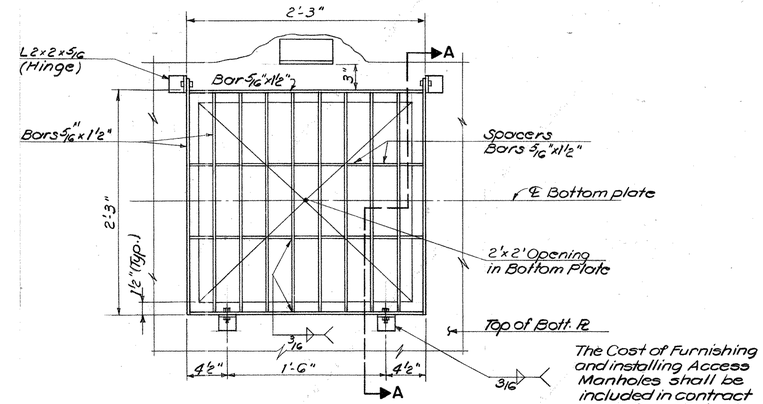


The Cost of Furnishing and installing Access Manholes shall be included in contract Lump Sum Price for Structural Steel Bridge No. 42-213-1

**PLAN**

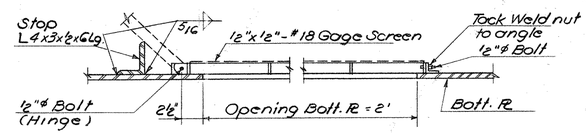


**SECTION A-A**

## ACCESS MANHOLE PLAN
Scale: 1 1/2" = 1'-0"

Note:
For location of access manhole doors to the box Girder see str. Sh. 11.

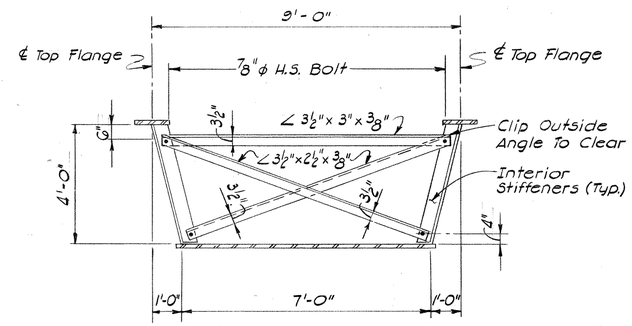


**DIAPHRAGM CF**
Scale: 1/2" = 1'-0"

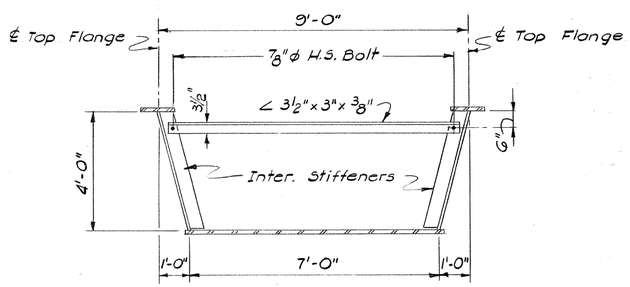


**DIAPHRAGM TI**
Scale: 1/2" = 1'-0"

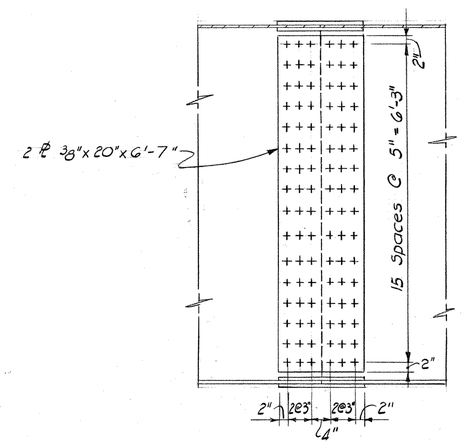


**BOTTOM FLANGE**

**FIELD SPLICE**
Scale: 3/4" = 1'-0"

**NOTES:**

All Fasteners for Field Splices shall be 7/8" ϕ H.S. Bolts (A325), open holes 15/16" ϕ. The hardened washers and Nuts for the Bottom Flange and Web Splices shall be Placed on the inside of all box girders.

For Framing Plan see Str. Sht. 11
For Shear Connector spacing see Structural Sheet 11

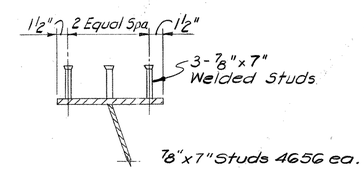


**DETAIL OF SHEAR CONNECTORS**
Scale: 3/4" = 1'-0"

| NO. | DATE | DESCRIPTION |
|---|---|---|
| | | |
| | | |
| | | |
| | | |
| | | |

REVISIONS

CONNECTICUT
DEPARTMENT OF TRANSPORTATION

EAST HARTFORD — MANCHESTER

RECONSTRUCTION OF INTERSTATE ROUTE 84
E.B. & W.B. ROADWAYS
UNDER
SIMMONS ROAD

STRUCTURAL STEEL DETAILS - 2

ENGINEER DE LEUW CATHER & COMPANY
DESIGNER R.M. DRAFTSMAN G.F. CHECKER J.K.
APPROVED DATE
STRUCTURE NO. 42-213-1 BRIDGE LOG NO. STRUCTURE SHEET NO. 13 OF 32

42-213

514 01 FOR INFORMATION ONLY 331

| REV. | DATE | REVISION DESCRIPTION |
|---|---|---|
| - | - | - |
| - | - | - |
| - | - | - |
| - | - | - |
| - | - | - |
| - | - | - |
| - | - | - |

THE INFORMATION, INCLUDING ESTIMATED QUANTITIES OF WORK, SHOWN ON THESE SHEETS IS BASED ON LIMITED INVESTIGATIONS BY THE STATE AND IS IN NO WAY WARRANTED TO INDICATE THE CONDITIONS OF ACTUAL QUANTITIES OF WORK WHICH WILL BE REQUIRED.

NOT TO SCALE

STATE OF CONNECTICUT
DEPARTMENT OF TRANSPORTATION

SIGNATURE/BLOCK: OFFICE OF ENGINEERING
APPROVED BY:

PROJECT TITLE: REPLACEMENT OF OVERHEAD SIGN SUPPORTS ON VARIOUS ROUTES STATEWIDE

TOWN: VARIOUS

DRAWING TITLE: FOR INFORMATION ONLY

PROJECT NO. 170-3303
DRAWING NO. FIO-15
SHEET NO. 010.015

FORM NO. ENG. 158 ED. 1-75

| F.H.W.A. REGION | STATE | TOWN | FED. AID PROJ. NO. | PROJ. NO. | YEAR | ROUTE NO. | SHEET NO. | TOTAL SHEETS |
|---|---|---|---|---|---|---|---|---|
| 1 | CONN. | E.HARTFORD-MANCHESTER | 184-4(105)65 | 42-213 | 1983 | 184/186 | 332 | 1020 |

## FINISHED BRIDGE SLAB ELEVATIONS AND DEAD LOAD DEFLECTIONS (FEET)

| TOP FLANGE NO. | | ℄ BRG. ABUT. 1 | 1 | 2 | 3 | 4 | 5 | 6 | 7 | 8 | 9 | 10 | 11 | 12 | 13 | ℄ BRG. PIER 1 | 14 | 15 | 16 | 17 | 18 | 19 | 20 | 21 | 22 | 23 | 24 | 25 | 26 | 27 | ℄ BRG. ABUT. 2 |
|---|---|---|---|---|---|---|---|---|---|---|---|---|---|---|---|---|---|---|---|---|---|---|---|---|---|---|---|---|---|---|---|
| 1 | SLAB ELEVATION | 71.300 | 71.759 | 72.185 | 72.579 | 72.940 | 73.267 | 73.562 | 73.824 | 74.054 | 74.250 | 74.414 | 74.545 | 74.643 | 74.708 | 74.740 | 74.739 | 74.705 | 74.638 | 74.537 | 74.403 | 74.235 | 74.034 | 73.800 | 73.532 | 73.231 | 72.897 | 72.529 | 72.128 | 71.693 | 71.225 |
| | STRUCTURAL STEEL | 0.000 | 0.013 | 0.025 | 0.034 | 0.039 | 0.041 | 0.039 | 0.034 | 0.026 | 0.017 | 0.009 | 0.002 | -0.002 | -0.003 | 0.000 | 0.008 | 0.020 | 0.034 | 0.050 | 0.066 | 0.080 | 0.090 | 0.097 | 0.098 | 0.094 | 0.084 | 0.068 | 0.048 | 0.025 | 0.000 |
| | OTHER DEAD LOADS | 0.000 | 0.083 | 0.157 | 0.216 | 0.256 | 0.274 | 0.269 | 0.245 | 0.204 | 0.153 | 0.100 | 0.052 | 0.018 | -0.001 | 0.000 | 0.020 | 0.058 | 0.111 | 0.174 | 0.241 | 0.301 | 0.350 | 0.380 | 0.390 | 0.375 | 0.337 | 0.277 | 0.197 | 0.102 | 0.000 |
| 2 | SLAB ELEVATION | 71.420 | 71.875 | 72.296 | 72.685 | 73.041 | 73.365 | 73.655 | 73.913 | 74.137 | 74.329 | 74.488 | 74.615 | 74.708 | 74.769 | 74.797 | 74.791 | 74.753 | 74.681 | 74.575 | 74.436 | 74.264 | 74.059 | 73.820 | 73.548 | 73.242 | 72.903 | 72.531 | 72.125 | 71.686 | 71.213 |
| | STRUCTURAL STEEL | 0.000 | 0.013 | 0.025 | 0.034 | 0.039 | 0.041 | 0.039 | 0.034 | 0.026 | 0.017 | 0.009 | 0.002 | -0.002 | -0.003 | 0.000 | 0.008 | 0.020 | 0.034 | 0.050 | 0.066 | 0.080 | 0.090 | 0.097 | 0.098 | 0.094 | 0.084 | 0.068 | 0.048 | 0.025 | 0.000 |
| | OTHER DEAD LOADS | 0.000 | 0.083 | 0.157 | 0.216 | 0.256 | 0.274 | 0.269 | 0.245 | 0.204 | 0.153 | 0.100 | 0.052 | 0.018 | -0.001 | 0.000 | 0.020 | 0.058 | 0.111 | 0.174 | 0.241 | 0.301 | 0.350 | 0.380 | 0.390 | 0.375 | 0.337 | 0.277 | 0.197 | 0.102 | 0.000 |
| 3 | SLAB ELEVATION | 71.626 | 72.076 | 72.493 | 72.877 | 73.229 | 73.547 | 73.833 | 74.086 | 74.307 | 74.494 | 74.649 | 74.770 | 74.859 | 74.915 | 74.938 | 74.929 | 74.885 | 74.809 | 74.699 | 74.556 | 74.379 | 74.169 | 73.925 | 73.648 | 73.338 | 72.995 | 72.618 | 72.207 | 71.763 | 71.286 |
| | STRUCTURAL STEEL | 0.000 | 0.013 | 0.025 | 0.034 | 0.039 | 0.041 | 0.039 | 0.034 | 0.026 | 0.017 | 0.009 | 0.002 | -0.002 | -0.003 | 0.000 | 0.008 | 0.020 | 0.034 | 0.050 | 0.066 | 0.080 | 0.090 | 0.097 | 0.098 | 0.094 | 0.084 | 0.068 | 0.048 | 0.025 | 0.000 |
| | OTHER DEAD LOADS | 0.000 | 0.083 | 0.157 | 0.216 | 0.256 | 0.274 | 0.269 | 0.245 | 0.204 | 0.153 | 0.100 | 0.052 | 0.018 | -0.001 | 0.000 | 0.020 | 0.058 | 0.111 | 0.174 | 0.241 | 0.301 | 0.350 | 0.380 | 0.390 | 0.375 | 0.337 | 0.277 | 0.197 | 0.102 | 0.000 |
| 4 | SLAB ELEVATION | 71.830 | 72.276 | 72.689 | 73.068 | 73.415 | 73.730 | 74.011 | 74.259 | 74.475 | 74.658 | 74.808 | 74.925 | 75.009 | 75.061 | 75.080 | 75.065 | 75.017 | 74.936 | 74.822 | 74.674 | 74.493 | 74.278 | 74.030 | 73.748 | 73.434 | 73.085 | 72.704 | 72.289 | 71.841 | 71.359 |
| | STRUCTURAL STEEL | 0.000 | 0.013 | 0.025 | 0.034 | 0.039 | 0.041 | 0.039 | 0.034 | 0.026 | 0.017 | 0.009 | 0.002 | -0.002 | -0.003 | 0.000 | 0.008 | 0.020 | 0.034 | 0.050 | 0.066 | 0.080 | 0.090 | 0.097 | 0.098 | 0.094 | 0.084 | 0.068 | 0.048 | 0.025 | 0.000 |
| | OTHER DEAD LOADS | 0.000 | 0.083 | 0.157 | 0.216 | 0.256 | 0.274 | 0.269 | 0.245 | 0.204 | 0.153 | 0.100 | 0.052 | 0.018 | -0.001 | 0.000 | 0.020 | 0.058 | 0.111 | 0.174 | 0.241 | 0.301 | 0.350 | 0.380 | 0.390 | 0.375 | 0.337 | 0.277 | 0.197 | 0.102 | 0.000 |
| 5 | SLAB ELEVATION | 71.894 | 72.335 | 72.743 | 73.118 | 73.461 | 73.770 | 74.047 | 74.291 | 74.502 | 74.681 | 74.826 | 74.939 | 75.019 | 75.066 | 75.080 | 75.061 | 75.008 | 74.923 | 74.803 | 74.651 | 74.465 | 74.246 | 73.993 | 73.707 | 73.388 | 73.035 | 72.649 | 72.230 | 71.777 | 71.290 |
| | STRUCTURAL STEEL | 0.000 | 0.013 | 0.025 | 0.034 | 0.039 | 0.041 | 0.039 | 0.034 | 0.026 | 0.017 | 0.009 | 0.002 | -0.002 | -0.003 | 0.000 | 0.008 | 0.020 | 0.034 | 0.050 | 0.066 | 0.080 | 0.090 | 0.097 | 0.098 | 0.094 | 0.084 | 0.068 | 0.048 | 0.025 | 0.000 |
| | OTHER DEAD LOADS | 0.000 | 0.083 | 0.157 | 0.216 | 0.256 | 0.274 | 0.269 | 0.245 | 0.204 | 0.153 | 0.100 | 0.052 | 0.018 | -0.001 | 0.000 | 0.020 | 0.058 | 0.111 | 0.174 | 0.241 | 0.301 | 0.350 | 0.380 | 0.390 | 0.375 | 0.337 | 0.277 | 0.197 | 0.102 | 0.000 |
| 6 | SLAB ELEVATION | 71.816 | 72.253 | 72.656 | 73.027 | 73.365 | 73.670 | 73.942 | 74.182 | 74.388 | 74.562 | 74.703 | 74.811 | 74.886 | 74.929 | 74.938 | 74.915 | 74.858 | 74.768 | 74.644 | 74.487 | 74.296 | 74.073 | 73.815 | 73.525 | 73.201 | 72.844 | 72.453 | 72.029 | 71.571 | 71.080 |
| | STRUCTURAL STEEL | 0.000 | 0.013 | 0.025 | 0.034 | 0.039 | 0.041 | 0.039 | 0.034 | 0.026 | 0.017 | 0.009 | 0.002 | -0.002 | -0.003 | 0.000 | 0.008 | 0.020 | 0.034 | 0.050 | 0.066 | 0.080 | 0.090 | 0.097 | 0.098 | 0.094 | 0.084 | 0.068 | 0.048 | 0.025 | 0.000 |
| | OTHER DEAD LOADS | 0.000 | 0.083 | 0.157 | 0.216 | 0.256 | 0.274 | 0.269 | 0.245 | 0.204 | 0.153 | 0.100 | 0.052 | 0.018 | -0.001 | 0.000 | 0.020 | 0.058 | 0.111 | 0.174 | 0.241 | 0.301 | 0.350 | 0.380 | 0.390 | 0.375 | 0.337 | 0.277 | 0.197 | 0.102 | 0.000 |
| 7 | SLAB ELEVATION | 71.738 | 72.170 | 72.569 | 72.935 | 73.268 | 73.569 | 73.837 | 74.072 | 74.274 | 74.443 | 74.579 | 74.683 | 74.754 | 74.791 | 74.797 | 74.768 | 74.707 | 74.612 | 74.484 | 74.322 | 74.127 | 73.899 | 73.637 | 73.342 | 73.013 | 72.651 | 72.256 | 71.827 | 71.365 | 70.870 |
| | STRUCTURAL STEEL | 0.000 | 0.013 | 0.025 | 0.034 | 0.039 | 0.041 | 0.039 | 0.034 | 0.026 | 0.017 | 0.009 | 0.002 | -0.002 | -0.003 | 0.000 | 0.008 | 0.020 | 0.034 | 0.050 | 0.066 | 0.080 | 0.090 | 0.097 | 0.098 | 0.094 | 0.084 | 0.068 | 0.048 | 0.025 | 0.000 |
| | OTHER DEAD LOADS | 0.000 | 0.083 | 0.157 | 0.216 | 0.256 | 0.274 | 0.269 | 0.245 | 0.204 | 0.153 | 0.100 | 0.052 | 0.018 | -0.001 | 0.000 | 0.020 | 0.058 | 0.111 | 0.174 | 0.241 | 0.301 | 0.350 | 0.380 | 0.390 | 0.375 | 0.337 | 0.277 | 0.197 | 0.102 | 0.000 |
| 8 | SLAB ELEVATION | 71.745 | 72.172 | 72.567 | 72.928 | 73.257 | 73.553 | 73.816 | 74.047 | 74.244 | 74.409 | 74.541 | 74.640 | 74.706 | 74.739 | 74.740 | 74.707 | 74.641 | 74.542 | 74.409 | 74.243 | 74.043 | 73.810 | 73.544 | 73.244 | 72.911 | 72.544 | 72.145 | 71.711 | 71.245 | 70.745 |
| | STRUCTURAL STEEL | 0.000 | 0.013 | 0.025 | 0.034 | 0.039 | 0.041 | 0.039 | 0.034 | 0.026 | 0.017 | 0.009 | 0.002 | -0.002 | -0.003 | 0.000 | 0.008 | 0.020 | 0.034 | 0.050 | 0.066 | 0.080 | 0.090 | 0.097 | 0.098 | 0.094 | 0.084 | 0.068 | 0.048 | 0.025 | 0.000 |
| | OTHER DEAD LOADS | 0.000 | 0.083 | 0.157 | 0.216 | 0.256 | 0.274 | 0.269 | 0.245 | 0.204 | 0.153 | 0.100 | 0.052 | 0.018 | -0.001 | 0.000 | 0.020 | 0.058 | 0.111 | 0.174 | 0.241 | 0.301 | 0.350 | 0.380 | 0.390 | 0.375 | 0.337 | 0.277 | 0.197 | 0.102 | 0.000 |

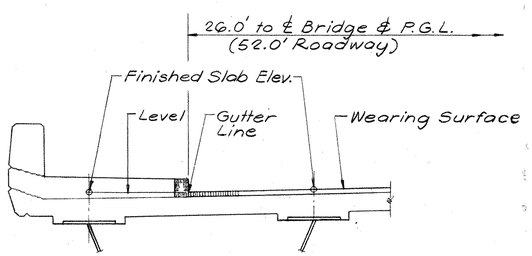


FINISHED SLAB ELEVATION DETAIL
(Not to Scale)

NOTES:
For Location of Points See Camber Diagram, Str. Sh. No. 15.
For structural steel notes see sheet 15.

| NO. | DATE | DESCRIPTION |
|---|---|---|
| | | |
| | | |
| | | |
| | | |

REVISIONS

CONNECTICUT
DEPARTMENT OF TRANSPORTATION

EAST HARTFORD — MANCHESTER

RECONSTRUCTION OF INTERSTATE ROUTE 84
E.B. & W.B. ROADWAYS
UNDER
SIMMONS ROAD

SLAB ELEVATIONS & D.L. DEFLECTION

ENGINEER DE LEUW CATHER & COMPANY
DESIGNER J.K. DRAFTSMAN Y.K.C. CHECKER E.S.
APPROVED DATE
STRUCTURE NO. 42-213-1 BRIDGE LOG NO. STRUCTURE SHEET NO. 14 OF 32

42-213

514 01 FOR INFORMATION ONLY 332

| REV. | DATE | REVISION DESCRIPTION |
|---|---|---|
| - | - | - |
| - | - | - |
| - | - | - |
| - | - | - |
| - | - | - |
| - | - | - |
| - | - | - |

THE INFORMATION, INCLUDING ESTIMATED QUANTITIES OF WORK, SHOWN ON THESE SHEETS IS BASED ON LIMITED INVESTIGATIONS BY THE STATE AND IS IN NO WAY WARRANTED TO INDICATE THE CONDITIONS OF ACTUAL QUANTITIES OF WORK WHICH WILL BE REQUIRED.

NOT TO SCALE

STATE OF CONNECTICUT
DEPARTMENT OF TRANSPORTATION

SIGNATURE/BLOCK: OFFICE OF ENGINEERING
APPROVED BY:

PROJECT TITLE: REPLACEMENT OF OVERHEAD SIGN SUPPORTS ON VARIOUS ROUTES STATEWIDE

TOWN: VARIOUS

DRAWING TITLE: FOR INFORMATION ONLY

PROJECT NO. 170-3303
DRAWING NO. FIO-16
SHEET NO. 010.016

FORM NO. ENG. 158 ED. 1-78

| F.H.W.A. REGION | STATE | TOWN | FED. AID PROJ. NO. | PROJ. NO. | YEAR | ROUTE NO. | SHEET NO. | TOTAL SHEETS |
|---|---|---|---|---|---|---|---|---|
| 1 | CONN. | E. HARTFORD-MANCHESTER | I-84-4(105)65 | 42-213 | 1983 | I-84/186 | 333 | 1020 |

## CAMBER (FEET)

| TOP FLANGE NO. | | ℄ BRG. ABUT. 1 | 1 | 2 | 3 | 4 | 5 | 6 | 7 | 8 | 9 | 10 | 11 | 12 | 13 | ℄ BRG. PIER 1 | 14 | 15 | 16 | 17 | 18 | 19 | 20 | 21 | 22 | 23 | 24 | 25 | 26 | 27 | ℄ BRG. ABUT. 2 |
|---|---|---|---|---|---|---|---|---|---|---|---|---|---|---|---|---|---|---|---|---|---|---|---|---|---|---|---|---|---|---|---|
| 1 | TOTAL DEAD LOAD | 0.000 | 0.096 | 0.182 | 0.250 | 0.295 | 0.315 | 0.308 | 0.279 | 0.230 | 0.170 | 0.109 | 0.054 | 0.016 | -0.004 | 0.000 | 0.028 | 0.078 | 0.145 | 0.224 | 0.307 | 0.381 | 0.440 | 0.477 | 0.488 | 0.469 | 0.421 | 0.345 | 0.245 | 0.127 | 0.000 |
| | VERT. CURVE ORDINATE | 0.000 | 0.213 | 0.394 | 0.542 | 0.657 | 0.739 | 0.788 | 0.804 | 0.788 | 0.739 | 0.657 | 0.542 | 0.394 | 0.213 | 0.000 | 0.234 | 0.434 | 0.601 | 0.734 | 0.834 | 0.901 | 0.935 | 0.935 | 0.901 | 0.834 | 0.734 | 0.601 | 0.434 | 0.234 | 0.000 |
| | TOTAL | 0.000 | 0.309 | 0.576 | 0.792 | 0.952 | 1.054 | 1.096 | 1.083 | 1.018 | 0.909 | 0.766 | 0.596 | 0.410 | 0.209 | 0.000 | 0.262 | 0.512 | 0.746 | 0.958 | 1.141 | 1.282 | 1.375 | 1.412 | 1.389 | 1.303 | 1.156 | 0.946 | 0.679 | 0.361 | 0.000 |
| 2 | TOTAL DEAD LOAD | 0.000 | 0.096 | 0.182 | 0.250 | 0.295 | 0.315 | 0.308 | 0.279 | 0.230 | 0.170 | 0.109 | 0.054 | 0.016 | -0.004 | 0.000 | 0.028 | 0.078 | 0.145 | 0.224 | 0.307 | 0.381 | 0.440 | 0.477 | 0.488 | 0.469 | 0.421 | 0.345 | 0.245 | 0.127 | 0.000 |
| | VERT. CURVE ORDINATE | 0.000 | 0.213 | 0.394 | 0.542 | 0.657 | 0.739 | 0.788 | 0.804 | 0.788 | 0.739 | 0.657 | 0.542 | 0.394 | 0.213 | 0.000 | 0.234 | 0.434 | 0.601 | 0.734 | 0.834 | 0.901 | 0.935 | 0.935 | 0.901 | 0.834 | 0.734 | 0.601 | 0.434 | 0.234 | 0.000 |
| | TOTAL | 0.000 | 0.309 | 0.576 | 0.792 | 0.952 | 1.054 | 1.096 | 1.083 | 1.018 | 0.909 | 0.766 | 0.596 | 0.410 | 0.209 | 0.000 | 0.262 | 0.512 | 0.746 | 0.958 | 1.141 | 1.282 | 1.375 | 1.412 | 1.389 | 1.303 | 1.156 | 0.946 | 0.679 | 0.361 | 0.000 |
| 3 | TOTAL DEAD LOAD | 0.000 | 0.096 | 0.182 | 0.250 | 0.295 | 0.315 | 0.308 | 0.279 | 0.230 | 0.170 | 0.109 | 0.054 | 0.016 | -0.004 | 0.000 | 0.028 | 0.078 | 0.145 | 0.224 | 0.307 | 0.381 | 0.440 | 0.477 | 0.488 | 0.469 | 0.421 | 0.345 | 0.245 | 0.127 | 0.000 |
| | VERT. CURVE ORDINATE | 0.000 | 0.213 | 0.394 | 0.542 | 0.657 | 0.739 | 0.788 | 0.804 | 0.788 | 0.739 | 0.657 | 0.542 | 0.394 | 0.213 | 0.000 | 0.234 | 0.434 | 0.601 | 0.734 | 0.834 | 0.901 | 0.935 | 0.935 | 0.901 | 0.834 | 0.734 | 0.601 | 0.434 | 0.234 | 0.000 |
| | TOTAL | 0.000 | 0.309 | 0.576 | 0.792 | 0.952 | 1.054 | 1.096 | 1.083 | 1.018 | 0.909 | 0.766 | 0.596 | 0.410 | 0.209 | 0.000 | 0.262 | 0.512 | 0.746 | 0.958 | 1.141 | 1.282 | 1.375 | 1.412 | 1.389 | 1.303 | 1.156 | 0.946 | 0.679 | 0.361 | 0.000 |
| 4 | TOTAL DEAD LOAD | 0.000 | 0.096 | 0.182 | 0.250 | 0.295 | 0.315 | 0.308 | 0.279 | 0.230 | 0.170 | 0.109 | 0.054 | 0.016 | -0.004 | 0.000 | 0.028 | 0.078 | 0.145 | 0.224 | 0.307 | 0.381 | 0.440 | 0.477 | 0.488 | 0.469 | 0.421 | 0.345 | 0.245 | 0.127 | 0.000 |
| | VERT. CURVE ORDINATE | 0.000 | 0.213 | 0.394 | 0.542 | 0.657 | 0.739 | 0.788 | 0.804 | 0.788 | 0.739 | 0.657 | 0.542 | 0.394 | 0.213 | 0.000 | 0.234 | 0.434 | 0.601 | 0.734 | 0.834 | 0.901 | 0.935 | 0.935 | 0.901 | 0.834 | 0.734 | 0.601 | 0.434 | 0.234 | 0.000 |
| | TOTAL | 0.000 | 0.309 | 0.576 | 0.792 | 0.952 | 1.054 | 1.096 | 1.083 | 1.018 | 0.909 | 0.766 | 0.596 | 0.410 | 0.209 | 0.000 | 0.262 | 0.512 | 0.746 | 0.958 | 1.141 | 1.282 | 1.375 | 1.412 | 1.389 | 1.303 | 1.156 | 0.946 | 0.679 | 0.361 | 0.000 |
| 5 | TOTAL DEAD LOAD | 0.000 | 0.096 | 0.182 | 0.250 | 0.295 | 0.315 | 0.308 | 0.279 | 0.230 | 0.170 | 0.109 | 0.054 | 0.016 | -0.004 | 0.000 | 0.028 | 0.078 | 0.145 | 0.224 | 0.307 | 0.381 | 0.440 | 0.477 | 0.488 | 0.469 | 0.421 | 0.345 | 0.245 | 0.127 | 0.000 |
| | VERT. CURVE ORDINATE | 0.000 | 0.213 | 0.394 | 0.542 | 0.657 | 0.739 | 0.788 | 0.804 | 0.788 | 0.739 | 0.657 | 0.542 | 0.394 | 0.213 | 0.000 | 0.234 | 0.434 | 0.601 | 0.734 | 0.834 | 0.901 | 0.935 | 0.935 | 0.901 | 0.834 | 0.734 | 0.601 | 0.434 | 0.234 | 0.000 |
| | TOTAL | 0.000 | 0.309 | 0.576 | 0.792 | 0.952 | 1.054 | 1.096 | 1.083 | 1.018 | 0.909 | 0.766 | 0.596 | 0.410 | 0.209 | 0.000 | 0.262 | 0.512 | 0.746 | 0.958 | 1.141 | 1.282 | 1.375 | 1.412 | 1.389 | 1.303 | 1.156 | 0.946 | 0.679 | 0.361 | 0.000 |
| 6 | TOTAL DEAD LOAD | 0.000 | 0.096 | 0.182 | 0.250 | 0.295 | 0.315 | 0.308 | 0.279 | 0.230 | 0.170 | 0.109 | 0.054 | 0.016 | -0.004 | 0.000 | 0.028 | 0.078 | 0.145 | 0.224 | 0.307 | 0.381 | 0.440 | 0.477 | 0.488 | 0.469 | 0.421 | 0.345 | 0.245 | 0.127 | 0.000 |
| | VERT. CURVE ORDINATE | 0.000 | 0.213 | 0.394 | 0.542 | 0.657 | 0.739 | 0.788 | 0.804 | 0.788 | 0.739 | 0.657 | 0.542 | 0.394 | 0.213 | 0.000 | 0.234 | 0.434 | 0.601 | 0.734 | 0.834 | 0.901 | 0.935 | 0.935 | 0.901 | 0.834 | 0.734 | 0.601 | 0.434 | 0.234 | 0.000 |
| | TOTAL | 0.000 | 0.309 | 0.576 | 0.792 | 0.952 | 1.054 | 1.096 | 1.083 | 1.018 | 0.909 | 0.766 | 0.596 | 0.410 | 0.209 | 0.000 | 0.262 | 0.512 | 0.746 | 0.958 | 1.141 | 1.282 | 1.375 | 1.412 | 1.389 | 1.303 | 1.156 | 0.946 | 0.679 | 0.361 | 0.000 |
| 7 | TOTAL DEAD LOAD | 0.000 | 0.096 | 0.182 | 0.250 | 0.295 | 0.315 | 0.308 | 0.279 | 0.230 | 0.170 | 0.109 | 0.054 | 0.016 | -0.004 | 0.000 | 0.028 | 0.078 | 0.145 | 0.224 | 0.307 | 0.381 | 0.440 | 0.477 | 0.488 | 0.469 | 0.421 | 0.345 | 0.245 | 0.127 | 0.000 |
| | VERT. CURVE ORDINATE | 0.000 | 0.213 | 0.394 | 0.542 | 0.657 | 0.739 | 0.788 | 0.804 | 0.788 | 0.739 | 0.657 | 0.542 | 0.394 | 0.213 | 0.000 | 0.234 | 0.434 | 0.601 | 0.734 | 0.834 | 0.901 | 0.935 | 0.935 | 0.901 | 0.834 | 0.734 | 0.601 | 0.434 | 0.234 | 0.000 |
| | TOTAL | 0.000 | 0.309 | 0.576 | 0.792 | 0.952 | 1.054 | 1.096 | 1.083 | 1.018 | 0.909 | 0.766 | 0.596 | 0.410 | 0.209 | 0.000 | 0.262 | 0.512 | 0.746 | 0.958 | 1.141 | 1.282 | 1.375 | 1.412 | 1.389 | 1.303 | 1.156 | 0.946 | 0.679 | 0.361 | 0.000 |
| 8 | TOTAL DEAD LOAD | 0.000 | 0.096 | 0.182 | 0.250 | 0.295 | 0.315 | 0.308 | 0.279 | 0.230 | 0.170 | 0.109 | 0.054 | 0.016 | -0.004 | 0.000 | 0.028 | 0.078 | 0.145 | 0.224 | 0.307 | 0.381 | 0.440 | 0.477 | 0.488 | 0.469 | 0.421 | 0.345 | 0.245 | 0.127 | 0.000 |
| | VERT. CURVE ORDINATE | 0.000 | 0.213 | 0.394 | 0.542 | 0.657 | 0.739 | 0.788 | 0.804 | 0.788 | 0.739 | 0.657 | 0.542 | 0.394 | 0.213 | 0.000 | 0.234 | 0.434 | 0.601 | 0.734 | 0.834 | 0.901 | 0.935 | 0.935 | 0.901 | 0.834 | 0.734 | 0.601 | 0.434 | 0.234 | 0.000 |
| | TOTAL | 0.000 | 0.309 | 0.576 | 0.792 | 0.952 | 1.054 | 1.096 | 1.083 | 1.018 | 0.909 | 0.766 | 0.596 | 0.410 | 0.209 | 0.000 | 0.262 | 0.512 | 0.746 | 0.958 | 1.141 | 1.282 | 1.375 | 1.412 | 1.389 | 1.303 | 1.156 | 0.946 | 0.679 | 0.361 | 0.000 |

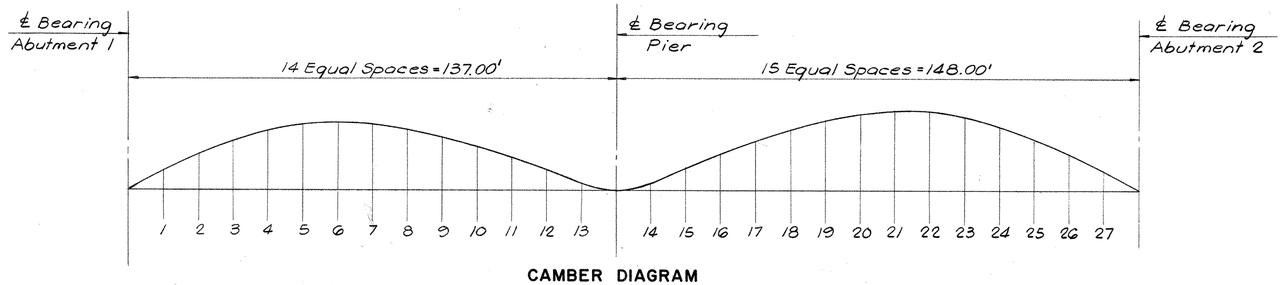


**CAMBER DIAGRAM**

| BEARING IDENTIFICATION | VERTICAL LOADS (KIPS) D.L. | L.L. | I | TOTAL | HORIZ. FORCE (KIPS) | MOVEMENT (IN.) LONG. | LATERAL | LONG. MOVEMENT DUE TO TEMPERATURE CHANGE FROM 50° F (IN.) ±20° | ±40° | ±60° |
|---|---|---|---|---|---|---|---|---|---|---|
| Abutment 1 | 166 | 77 | 13 | 256 | 30 | 1.50 | .40 | ±.233 | ±.467 | ±.699 |
| Pier | 766 | 117 | 26 | 909 | 100 | – | – | – | – | – |
| Abutment 2 | 200 | 80 | 13 | 293 | 30 | 1.50 | .40 | ±.217 | ±.434 | ±.651 |

Note:
For bearing details see Str. Sh. 19

WELD INSPECTION:
All shop and field butt and groove welds in the web and top and bottom flanges shall be completely inspected by radiographic or ultrasonic testing and shall be finished smooth and flush with the base metal on all surfaces by grinding in the direction of applied stress, leaving surfaces free from depressions. Chipping may be used provided it is followed by such grinding. (The grinding shall not reduce the thickness of the base metal by more than 1/32 inch or five (5) percent of the thickness, whichever is smaller)

All web to flange and web to bearing stiffener fillet welds shall be inspected in their entirely by the magnetic particle method.

All web to flange and bearing stiffener fillet welds shall be inspected by the magnetic particle method. At least one (1) foot of every ten (10) foot length of fillet weld and (1) foot of each fillet weld less than ten (10) feet in length shall be tested. If unacceptable discontinuities are found in any test lenght of weld, the full length of the weld, or five (5) feet on either side of the test length, whichever is lesser, shall be tested. Multiple pass welds inspected by the magnetic particle method shall have each pass or layer inspected and accepted before proceeding to the next pass or layer, as determined by the Engineer.

FABRICATION:
Intermediate stiffeners shall be placed only on the inside of the Boxes. Intermediate stiffener spacing shall be determined by fabrication requirements but within the maximum spacing shown.

Bearing and intermediate Stiffeners, Crossframe connection plates and end of Boxes, shall be vertical after application of full dead loads.

No attachment shall be fillet welded, plug welded or tack welded to the tension - flange.

SPLICES:
Bolted Splices other than those indicated on the plans, will not be allowed except with the written permission of the Engineer prior to the submission of shop plans. If allowed, these Splices shall be designed by the Contractor, approved by the Engineer and the cost of these splices including the cost of Design shall be at no extra expense to the State. Welded Splices, other than those indicated on the plans will not be allowed except with written permission of the Engineer prior to the submission of shop plans. If these Splices are allowed and they are in addition to the shop Splices indicated on the plans, the cost of those splices including the nondestructive testing of their welds, as determined by the Engineer, shall be at no extra expense to the State

Shop and field splices of web plates, other than those indicated on the plans, will not be allowed except with the written permission of the Engineer prior to the submission of shop plans.

If these splices are allowed and they are in addition to the shop and field splices indicated on the plans the cost of these additional splices including the nondestructive testing of their welds as determined by the Engineer, shall be at no extra expense to the State.

Intermediate Bracing between Girders with Bolted Connections - Nuts Fingertight During Entire Slab Poured then tightened after Entire Slab pour is completed.
Field Flange and Web splices shall preferably be made in the same Cross Section.
Shop Flange Splices shall be located a minimum of 6" from Web splices.
Transition of thickness and width of the top and bottom flange plates shall be made with smooth transitions of the Types Specified by Paragraphs 9.20, 1, 2 & 3 of the AWS D1-1 and as modified by latest AASHTO Specifications.

ERECTION
The Contractor shall take the proper precautions to insure the stability of all structural elements until the total structure is in being.

All Fracture Critical Member Plates shall be rolled on a sheared mill and furnished with oxygen cut edges.

| NO. | DATE | DESCRIPTION |
|---|---|---|
| | | |
| | | |
| | | |
| | | |
| | | |

REVISIONS

CONNECTICUT
DEPARTMENT OF TRANSPORTATION

EAST HARTFORD — MANCHESTER

RECONSTRUCTION OF INTERSTATE ROUTE 84
E.B. & W.B. ROADWAYS
UNDER
SIMMONS ROAD

CAMBER DIAGRAM

ENGINEER DE LEUW CATHER & COMPANY
DESIGNER J.K. DRAFTSMAN Y.K.C. CHECKER E.S.
APPROVED DATE
STRUCTURE NO. 42-213-1 BRIDGE LOG NO. STRUCTURE SHEET NO. 15 OF 32

42-218

514 01 FOR INFORMATION ONLY 833

| REV. | DATE | REVISION DESCRIPTION |
|---|---|---|
| - | - | - |
| - | - | - |
| - | - | - |
| - | - | - |
| - | - | - |
| - | - | - |
| - | - | - |

THE INFORMATION, INCLUDING ESTIMATED QUANTITIES OF WORK, SHOWN ON THESE SHEETS IS BASED ON LIMITED INVESTIGATIONS BY THE STATE AND IS IN NO WAY WARRANTED TO INDICATE THE CONDITIONS OF ACTUAL QUANTITIES OF WORK WHICH WILL BE REQUIRED.

NOT TO SCALE

STATE OF CONNECTICUT
DEPARTMENT OF TRANSPORTATION

SIGNATURE/BLOCK: OFFICE OF ENGINEERING
APPROVED BY:

PROJECT TITLE: REPLACEMENT OF OVERHEAD SIGN SUPPORTS ON VARIOUS ROUTES STATEWIDE

TOWN: VARIOUS

DRAWING TITLE: FOR INFORMATION ONLY

PROJECT NO. 170-3303
DRAWING NO. FIO-17
SHEET NO. 010.017

FORM NO. ENG. 158 ED 1-75

| F H W A REGION | STATE | TOWN | FED. AID PROJ. NO. | PROJ. NO. | YEAR | ROUTE NO. | SHEET NO. | TOTAL SHEETS |
|---|---|---|---|---|---|---|---|---|
| 1 | CONN. | E.HARTFORD-MANCHESTER | I84-4(105)65 | 42-213 | 1983 | I84/I86 | 334 | 1020 |

SLAB PLAN
Scale: 3/32" = 1'-0"

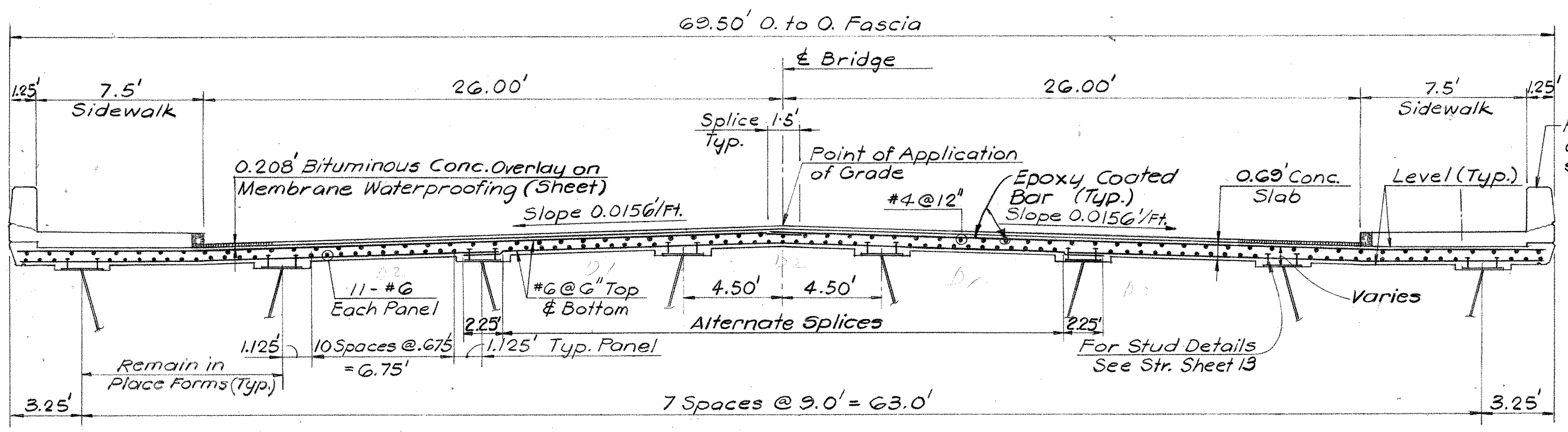


TYPICAL CROSS SECTION
Scale: 1/4" = 1'-0"

NOTE:
For Details "A" & "B" See Structure Sheet 17.

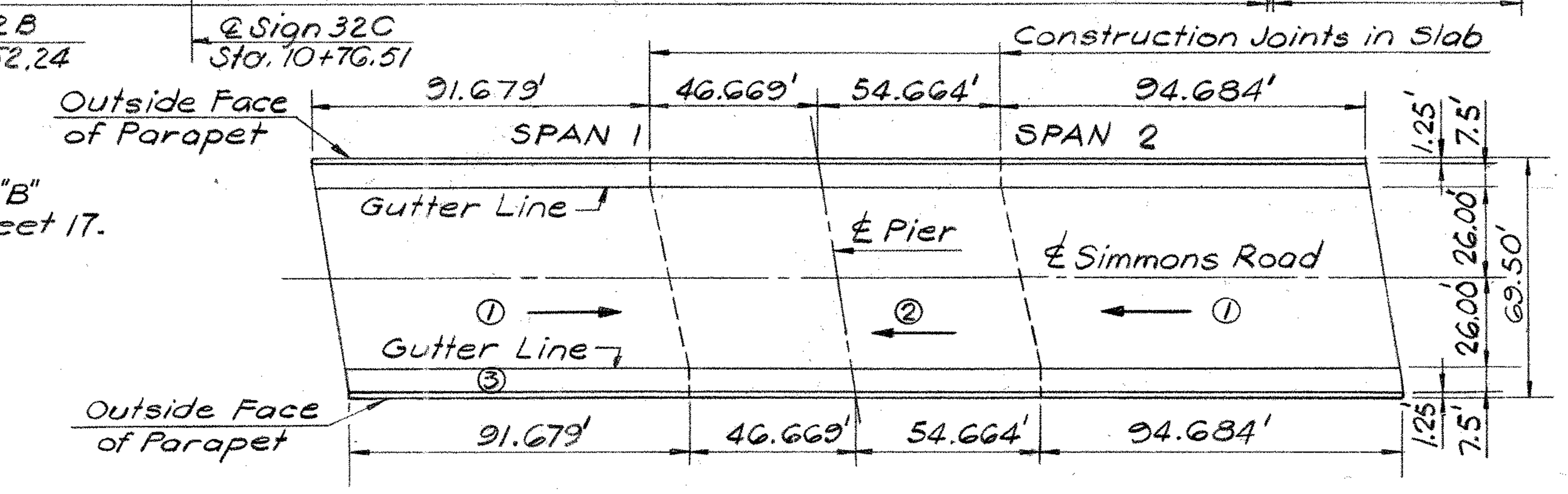


POURING SEQUENCE DIAGRAM

Notes:
1. Top Reinforcing bars of deck slab shall be epoxy coated.
2. For Parapet Reinforcement at Junction Box and Lighting Standard see Str. Sh. 20.

Pouring Sequence Notes:
The concrete for the Bridge Slab shall be placed in the sequence ① ② and in the direction (→) as shown. The concrete for Bridge Slab shall not be placed in any Sequence Section until the concrete of the previous Sequence Section has cured a minimum of 7 days.

| NO. | DATE | DESCRIPTION |
|---|---|---|
| | | |
| | | |
| | | |
| | | |
| | | |
| REVISIONS | | |

CONNECTICUT
DEPARTMENT OF TRANSPORTATION
EAST HARTFORD — MANCHESTER
RECONSTRUCTION OF INTERSTATE ROUTE 84
E.B. & W.B. ROADWAYS
UNDER
SIMMONS ROAD
SLAB PLAN AND SECTION

ENGINEER DE LEUW CATHER & COMPANY
DESIGNER J.K. | DRAFTSMAN Y.K.C. | CHECKER J.C.
APPROVED | DATE
STRUCTURE NO. 42-213-1 | BRIDGE LOG NO. | STRUCTURE SHEET NO. 16 OF 32

42-213

514 01 FOR INFORMATION ONLY 334

| REV. | DATE | REVISION DESCRIPTION |
|---|---|---|
| - | - | - |
| - | - | - |
| - | - | - |
| - | - | - |
| - | - | - |
| - | - | - |
| - | - | - |

THE INFORMATION, INCLUDING ESTIMATED QUANTITIES OF WORK, SHOWN ON THESE SHEETS IS BASED ON LIMITED INVESTIGATIONS BY THE STATE AND IS IN NO WAY WARRANTED TO INDICATE THE CONDITIONS OF ACTUAL QUANTITIES OF WORK WHICH WILL BE REQUIRED.

NOT TO SCALE

STATE OF CONNECTICUT
DEPARTMENT OF TRANSPORTATION

SIGNATURE/BLOCK: OFFICE OF ENGINEERING
APPROVED BY:

PROJECT TITLE: REPLACEMENT OF OVERHEAD SIGN SUPPORTS ON VARIOUS ROUTES STATEWIDE

TOWN: VARIOUS
DRAWING TITLE: FOR INFORMATION ONLY

PROJECT NO. 170-3303
DRAWING NO. FIO-18
SHEET NO. 010.018

FORM NO. ENG. 15A ED. 1-75

| F.H.W.A. REGION | STATE | TOWN | FED. AID PROJ. NO. | PROJ. NO. | YEAR | ROUTE NO. | SHEET NO. | TOTAL SHEETS |
|---|---|---|---|---|---|---|---|---|
| 1 | CONN. | E.HARTFORD-MANCHESTER | I84-4(105)65 | 42-213 | 1983 | I-84/186 | 335 | 1020 |

NOTE:
Additional Parapet Reinforcing and Anchor Bolts Required for Sign Supports - See Structure Sheet 22

For Parapet Reinforcing at Cast Iron Jt. Box - See Structure Sh. 20

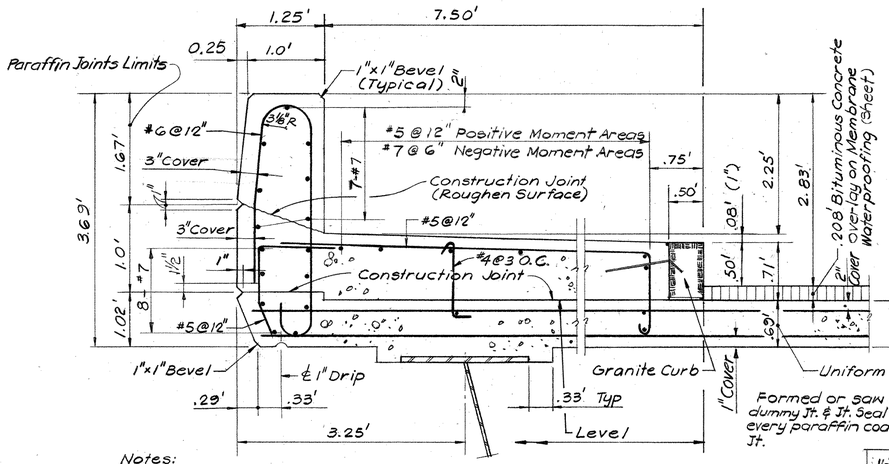


Notes:
All bars in Sidewalk are #5 bars unless noted otherwise.
All bars in Sidewalk and parapet shall have 2" cover except where noted otherwise.

PARAPET AND SIDEWALK DETAILS
Scale: 1" = 1'-0"

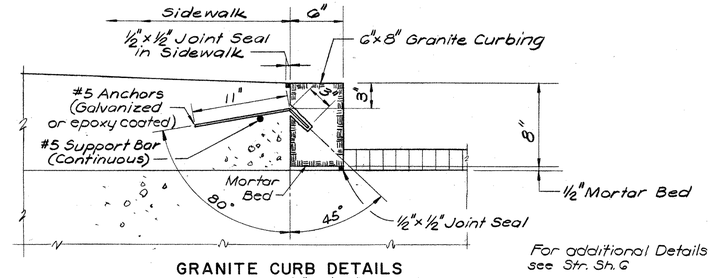


GRANITE CURB DETAILS
Scale: 1 1/2" = 1'-0"

For additional Details see Str. Sh. 6

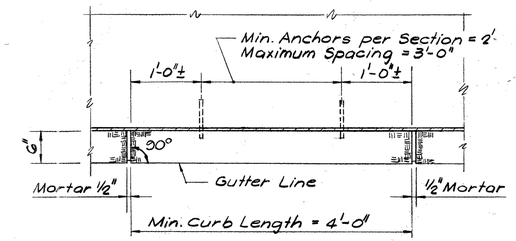


PLAN OF GRANITE CURB
Scale: 1" = 1'-0"

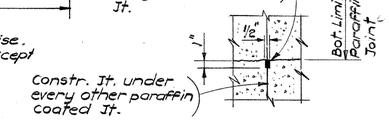


SECTION D-D

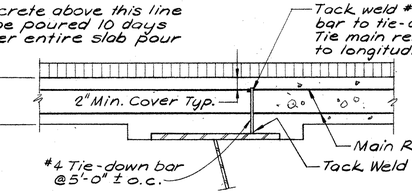


Notes:
Tie-down bars do not exclude the use of chairs for supporting the reinforcement mat.
Tie-down bar and longitudinal bar to clear shear connectors.
The cost of furnishing and placing tie-down bars to be included in the Contract Item "Deformed Steel Bars."

TIE-DOWN DETAIL
Scale: 1" = 1'-0"

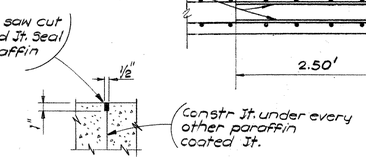


SECTION E-E

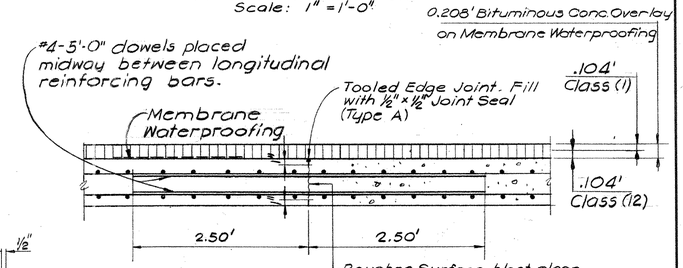


TRANSVERSE CONSTRUCTION JOINT
Scale: 1" = 1'-0"

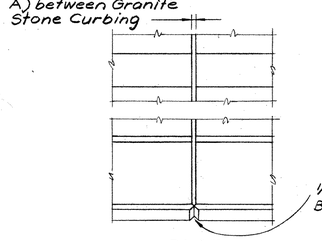


PLAN

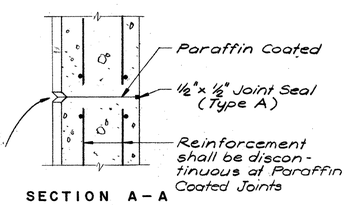


SECTION A-A

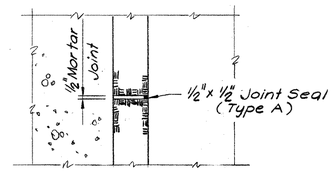


SECTION B-B

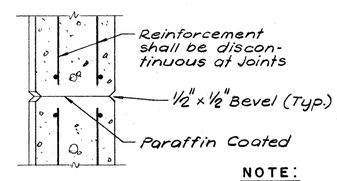


SECTION C-C

NOTE:
1 1/2" ϕ Polyvinyl Chloride Plastic Pipe Drains shall be placed thru slabs where shown on slab plan. Top of drain pipe shall be cut flush with top of slab. Payment for furnishing and installing drains shall be included in the Contract unit price per linear foot for 1 1/2" ϕ polyvinyl chloride plastic pipe. For location see sh. 16.
For Membrane Waterproofing see Str. Sh. 20

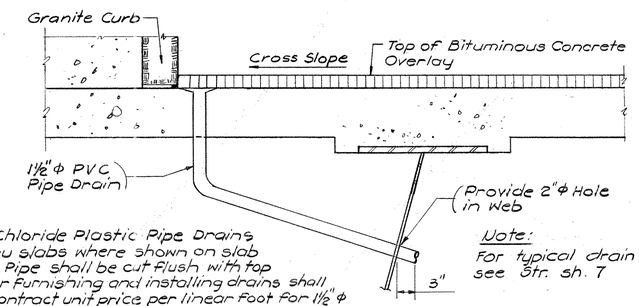


Note:
For typical drain detail see Str. sh. 7

DRAINAGE DETAILS
Scale: 1" = 1'-0"

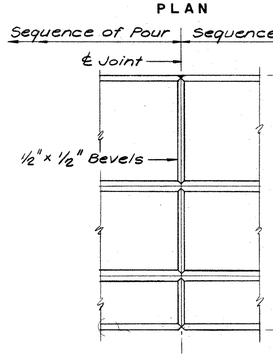


ELEVATION

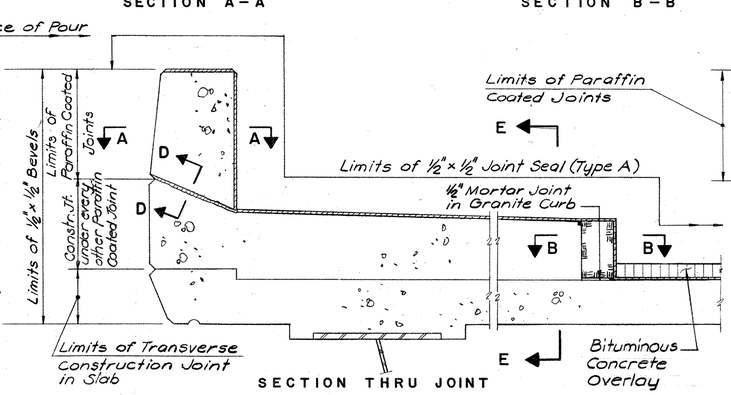


SECTION THRU JOINT

SEQUENCE OF POUR JOINTS & PARAFFIN COATED JOINT — DETAIL A
(NEGATIVE MOMENT AREAS)
Scale: 1" = 1'-0"

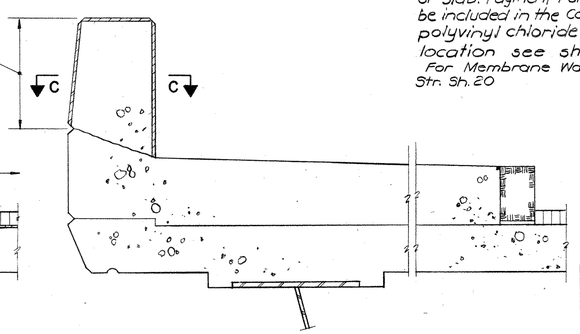

DETAIL B
(POSITIVE MOMENT AREAS)
Scale: 1" = 1'-0"

| NO. | DATE | DESCRIPTION |
|---|---|---|
| | | |
| | | |
| | | |
| | | |
| | | |

REVISIONS

CONNECTICUT
DEPARTMENT OF TRANSPORTATION

EAST HARTFORD — MANCHESTER

RECONSTRUCTION OF INTERSTATE ROUTE 84
E.B. & W.B. ROADWAYS
UNDER
SIMMONS ROAD

SLAB DETAILS-1

ENGINEER DE LEUW CATHER & COMPANY
DESIGNER J.C. DRAFTSMAN Y.K.C. CHECKER J.K.
APPROVED DATE
STRUCTURE NO. 42-213-1 BRIDGE LOG NO. STRUCTURE SHEET NO. 17 OF 32

42-213 514 01 FOR INFORMATION ONLY 235

| REV. | DATE | REVISION DESCRIPTION |
|---|---|---|
| - | - | - |
| - | - | - |
| - | - | - |
| - | - | - |
| - | - | - |
| - | - | - |
| - | - | - |

THE INFORMATION, INCLUDING ESTIMATED QUANTITIES OF WORK, SHOWN ON THESE SHEETS IS BASED ON LIMITED INVESTIGATIONS BY THE STATE AND IS IN NO WAY WARRANTED TO INDICATE THE CONDITIONS OF ACTUAL QUANTITIES OF WORK WHICH WILL BE REQUIRED.

NOT TO SCALE

STATE OF CONNECTICUT
DEPARTMENT OF TRANSPORTATION

SIGNATURE/BLOCK: OFFICE OF ENGINEERING
APPROVED BY:

PROJECT TITLE: REPLACEMENT OF OVERHEAD SIGN SUPPORTS ON VARIOUS ROUTES STATEWIDE

TOWN: VARIOUS

DRAWING TITLE: FOR INFORMATION ONLY

PROJECT NO. 170-3303
DRAWING NO. FIO-19
SHEET NO. 010.019

OGILVIE PRESS BUFFALO, N.Y.

FORM NO. ENG 158 ED 1-79

| F.H.W.A. REGION | STATE | TOWN | FED. AID PROJ. NO. | PROJ. NO. | YEAR | ROUTE NO. | SHEET NO. | TOTAL SHEETS |
|---|---|---|---|---|---|---|---|---|
| 1 | CONN. | E.HARTFORD-MANCHESTER | 184-4(105)65 | 42-213 | 1983 | 184/186 | 336 | 1020 |

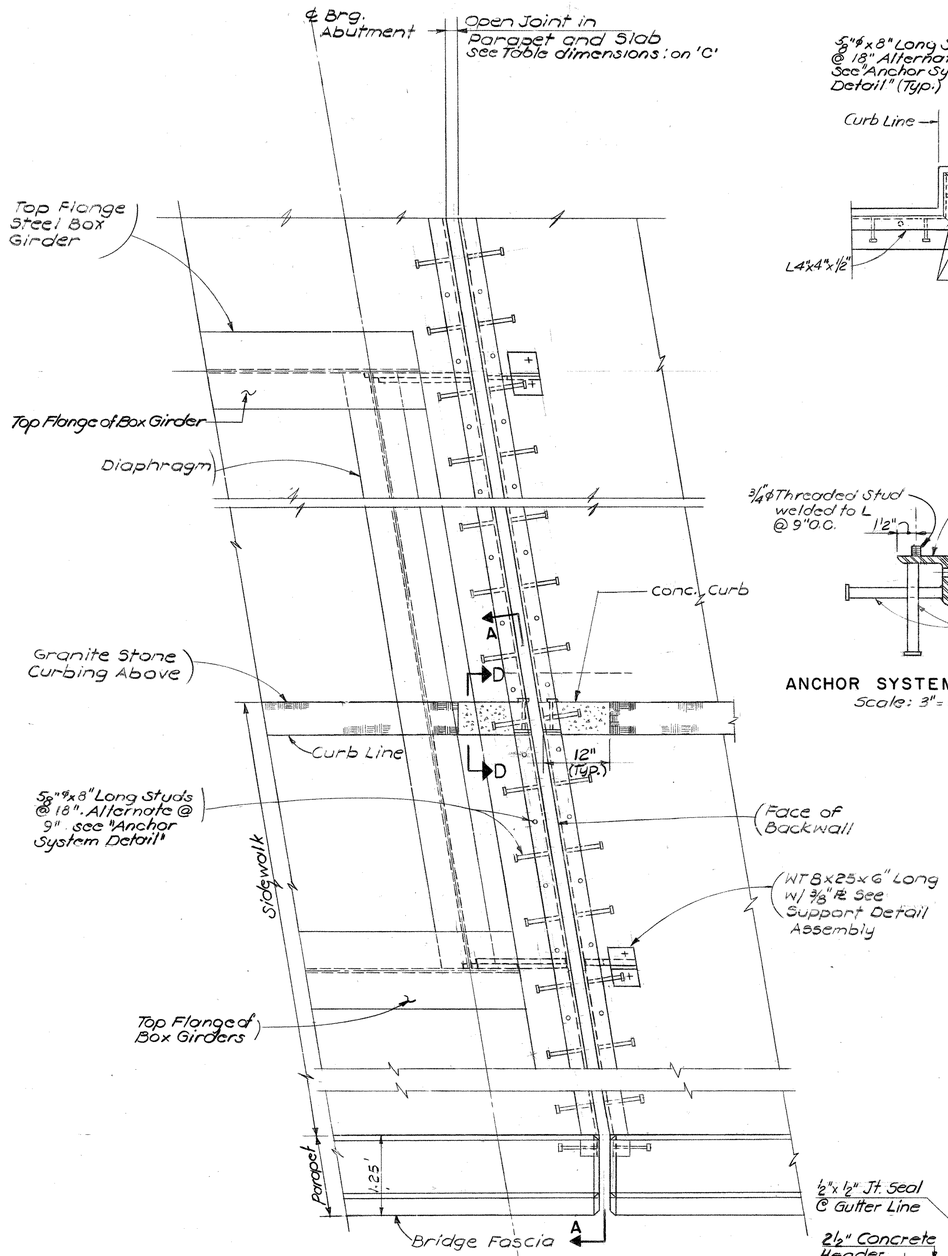


PARTIAL PLAN AT EXPANSION JOINT

Scale: 1"=1'-0"

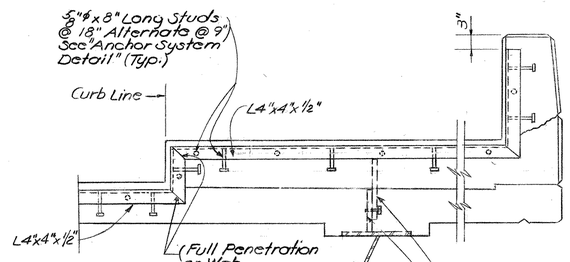


SECTION A-A

Scale: 3/4"=1'-0"

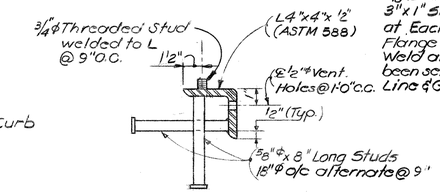


ANCHOR SYSTEM DETAIL

Scale: 3"=1'-0"

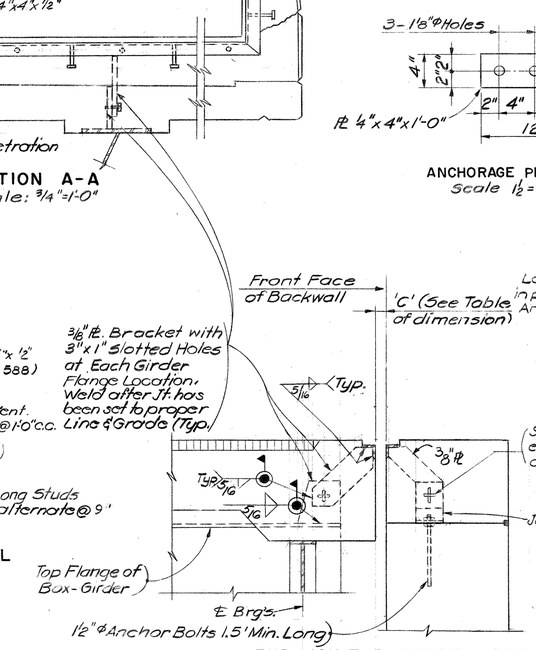


EXP. JOINT SUPPORT ASSEMBLY

Not to scale

NOTE:
Anchor Bolts shall conform to the requirements of ASTM A449 with nuts and washers conforming to A563 Grade B. Anchor Bolts, Nuts & Washers shall be galvanized in conformance with the requirements of ASTM A153. Anchorage plates shall conform to the requirements of ASTM A36. All Anchorage material will be paid for at the contract unit price per pound for "Deformed Steel Bars"

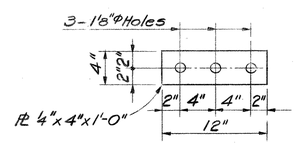


ANCHORAGE PLATE "A"

Scale 1 1/2"=1'-0"

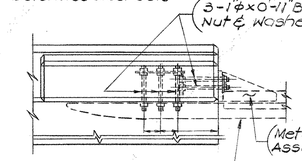


PLAN

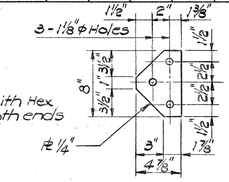


ANCHORAGE PLATE 'B'

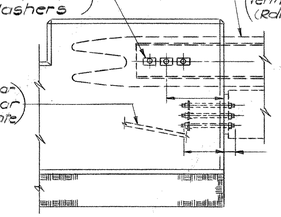


ELEVATION

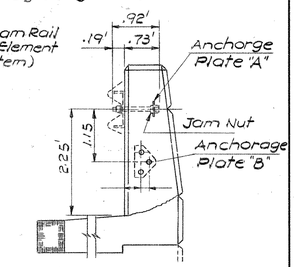


END ELEVATION

METAL BEAM RAIL ANCHORAGE AT BRIDGE PARAPET

Scale: 1"=1'-0"

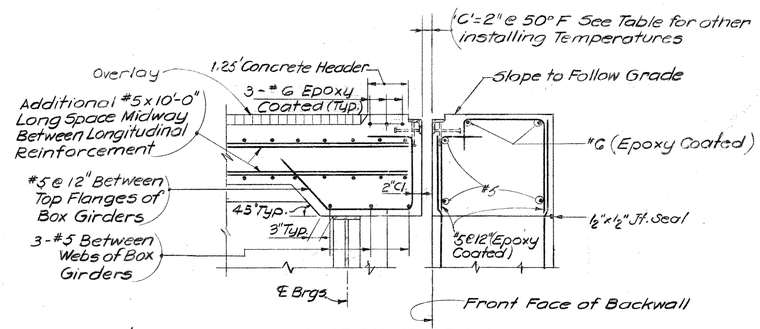


TYPICAL SECTION AT ABUTMENT

Scale: 3/4"=1'-0"

| DIMENSIONS FOR VARIOUS INSTALLING TEMPERATURES | | |
|---|---|---|
| TEMPERATURE DEGREES F | DIMENSIONS (IN) ABUTMENT 1 | DIMENSIONS (IN) ABUTMENT 2 |
| | C | C |
| -10° | 2.642" | 2.690" |
| 10° | 2.428" | 2.460" |
| 30° | 2.214" | 2.230" |
| 50° | 2.000" | 2.000" |
| 70° | 1.786" | 1.770" |
| 90° | 1.572" | 1.540" |

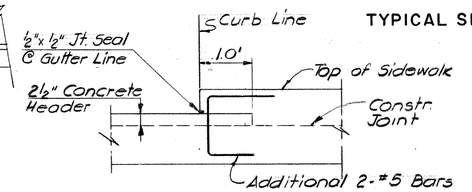


SECTION D-D

Scale: 3/4"=1'-0"

| NO. | DATE | DESCRIPTION |
|---|---|---|
| | | |
| | | |
| | | |
| | | |
| | | |
| | | |

REVISIONS

CONNECTICUT
DEPARTMENT OF TRANSPORTATION

EAST HARTFORD – MANCHESTER

RECONSTRUCTION OF INTERSTATE ROUTE 84
E.B. & W.B. ROADWAYS
UNDER
SIMMONS ROAD

SLAB DETAILS & EXPANSION JOINT DETAILS

ENGINEER DE LEUW CATHER & COMPANY
DESIGNER J.K. DRAFTSMAN T S G CHECKER J.C.
APPROVED DATE
STRUCTURE NO. 42-213-1 BRIDGE LOG NO. STRUCTURE SHEET NO. 18 OF 32

42-213

514 01 FOR INFORMATION ONLY 336

| REV. | DATE | REVISION DESCRIPTION |
|---|---|---|
| - | - | - |
| - | - | - |
| - | - | - |
| - | - | - |
| - | - | - |
| - | - | - |
| - | - | - |

THE INFORMATION, INCLUDING ESTIMATED QUANTITIES OF WORK, SHOWN ON THESE SHEETS IS BASED ON LIMITED INVESTIGATIONS BY THE STATE AND IS IN NO WAY WARRANTED TO INDICATE THE CONDITIONS OF ACTUAL QUANTITIES OF WORK WHICH WILL BE REQUIRED.

NOT TO SCALE

STATE OF CONNECTICUT
DEPARTMENT OF TRANSPORTATION

SIGNATURE/BLOCK: OFFICE OF ENGINEERING
APPROVED BY:

PROJECT TITLE: REPLACEMENT OF OVERHEAD SIGN SUPPORTS ON VARIOUS ROUTES STATEWIDE

TOWN: VARIOUS

DRAWING TITLE: FOR INFORMATION ONLY

PROJECT NO. 170-3303
DRAWING NO. FIO-20
SHEET NO. 010.020

| F.H.W.A. REGION | STATE | TOWN | FED. AID PROJ. NO. | PROJ. NO. | YEAR | ROUTE NO. | SHEET NO. | TOTAL SHEETS |
|---|---|---|---|---|---|---|---|---|
| 1 | CONN. | E.HARTFORD-MANCHESTER | I-84-4(105)65 | 42-213 | 1983 | I-84/186 | 337 | 1020 |

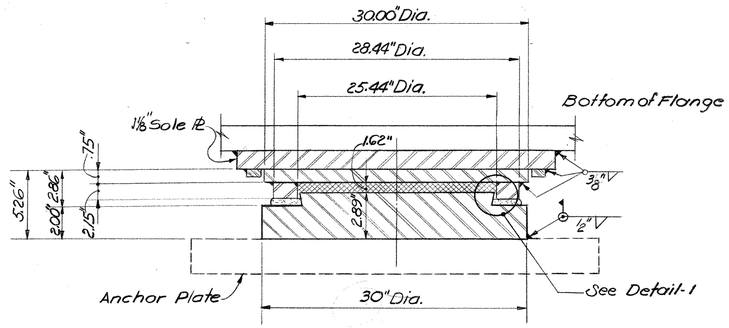


SECTION A-A
Not to Scale

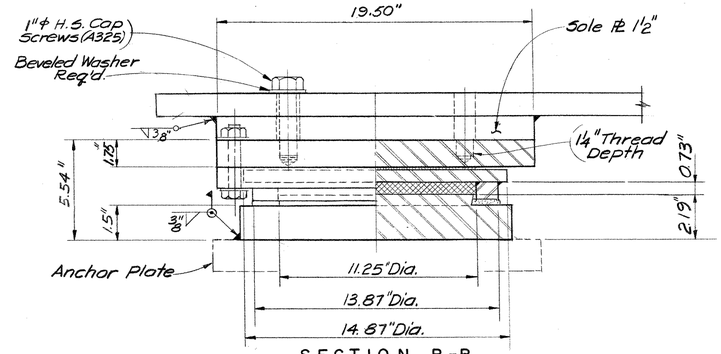


SECTION B-B
Not to Scale

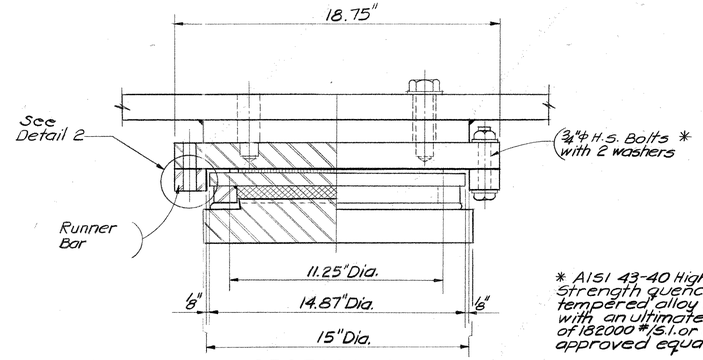


SECTION C-C
Not to Scale

* AISI 43-40 High Yield Strength quenched and tempered alloy steel with an ultimate strength of 182000 #/S.I. or an approved equal.

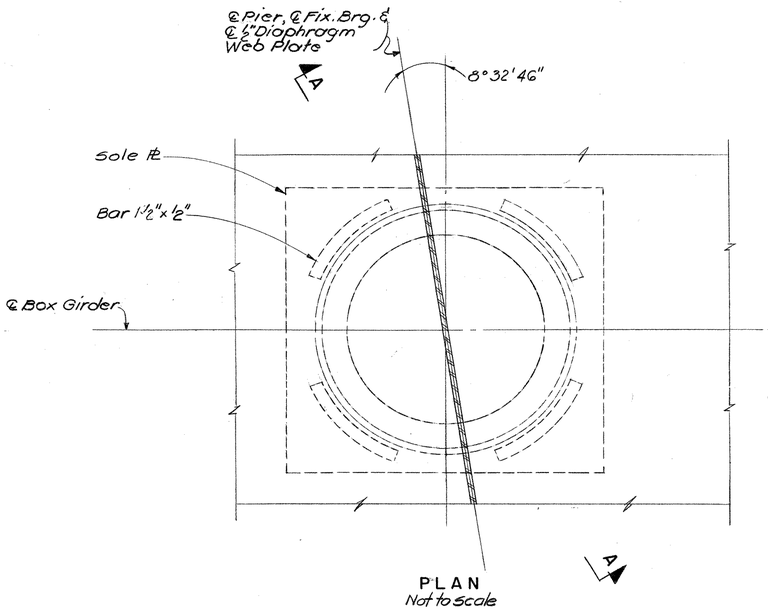


PLAN
Not to scale

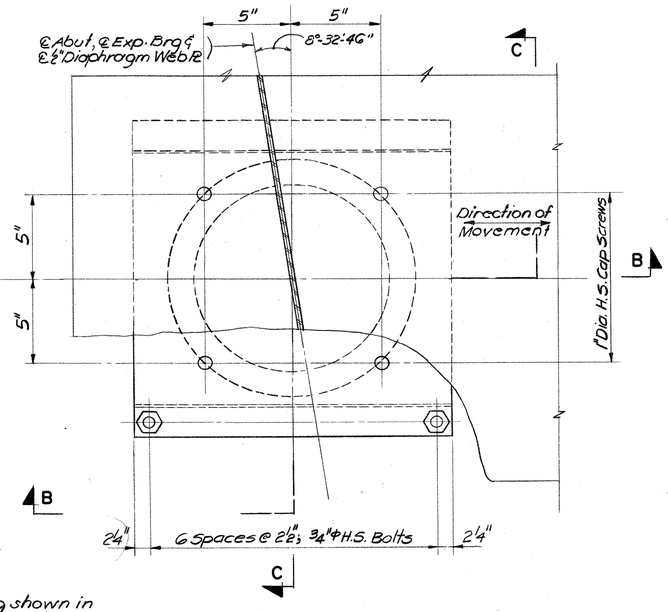


PLAN
Not to Scale

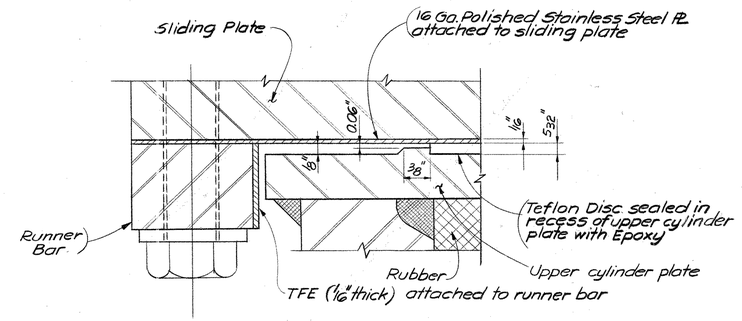


DETAIL 2
Not to Scale

NOTES:

Pot Bearings of Equal Capacity from other Manufacturers listed in the Special Provisions "Pot or Spherical Bearings (kips)" are acceptable as alternates.

The required adjustments of substructure pad elevations shall be done by the Contractor prior to the approval of the substructure Shop Drawings.

The cost of the modification and pad adjustments shall be at no extra expense to the State.

Note:
All Bearing shown in normal position at 50°F

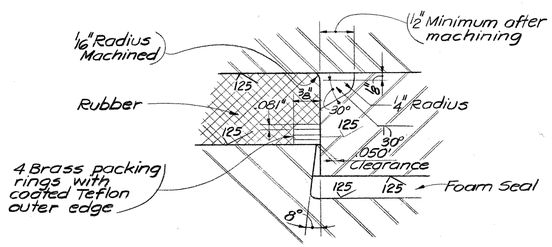


DETAIL-1
Scale: Full Size

FIXED BEARING

EXPANSION BEARING
(GUIDED)

NOTE:
For Bearing Design Data see str. sh. 15
For Anchor Plate Detail see str. sh. 10
For Sole Plate Dimensions see Str. Sh. 12

| NO. | DATE | DESCRIPTION |
|---|---|---|
| | | |
| | | |
| | | |
| | | |
| | | |

REVISIONS

CONNECTICUT
DEPARTMENT OF TRANSPORTATION

EAST HARTFORD — MANCHESTER

RECONSTRUCTION OF INTERSTATE ROUTE 84
E.B. & W.B. ROADWAYS
UNDER
SIMMONS ROAD

BEARING DETAILS

ENGINEER DE LEUW CATHER & COMPANY
DESIGNER J.C. DRAFTSMAN J.S. CHECKER E.S.
APPROVED DATE
STRUCTURE NO. 42-213-1 BRIDGE LOG NO. STRUCTURE SHEET NO. 19 OF 32

42-213

514 01 FOR INFORMATION ONLY 337

| REV. | DATE | REVISION DESCRIPTION |
|---|---|---|
| - | - | - |
| - | - | - |
| - | - | - |
| - | - | - |
| - | - | - |
| - | - | - |
| - | - | - |

THE INFORMATION, INCLUDING ESTIMATED QUANTITIES OF WORK, SHOWN ON THESE SHEETS IS BASED ON LIMITED INVESTIGATIONS BY THE STATE AND IS IN NO WAY WARRANTED TO INDICATE THE CONDITIONS OF ACTUAL QUANTITIES OF WORK WHICH WILL BE REQUIRED.

NOT TO SCALE

STATE OF CONNECTICUT
DEPARTMENT OF TRANSPORTATION

SIGNATURE/BLOCK:
OFFICE OF ENGINEERING
APPROVED BY:

PROJECT TITLE:
REPLACEMENT OF OVERHEAD SIGN SUPPORTS ON VARIOUS ROUTES STATEWIDE

TOWN: VARIOUS

DRAWING TITLE: FOR INFORMATION ONLY

PROJECT NO. 170-3303
DRAWING NO. FIO-21
SHEET NO. 010.021

| FHWA REGION | STATE | TOWN | FED. AID PROJ. NO. | PROJ. NO. | YEAR | ROUTE NO. | SHEET NO. | TOTAL SHEETS |
|---|---|---|---|---|---|---|---|---|
| 1 | CONN. | E.HARTFORD-MANCHESTER | I-84-4(105)65 | 42-213 | 1983 | I-84/I-86 | 338 | 1020 |

FORM NO. ENG. 158 ED. 1-78

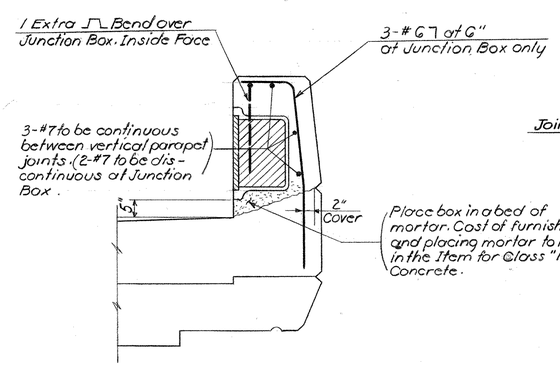


SECTION AT PARAPET WITH SIDEWALK

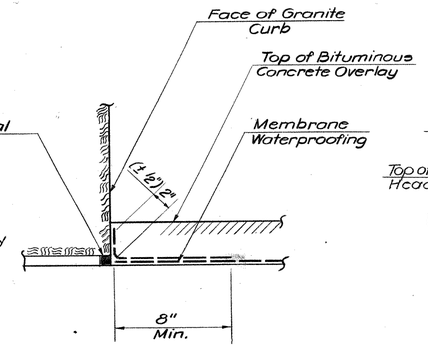


TREATMENT OF MEMBRANE WATERPROOFING AT GUTTER

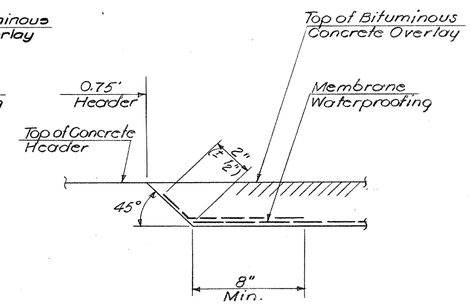


TREATMENT OF MEMBRANE WATERPROOFING AT HEADER

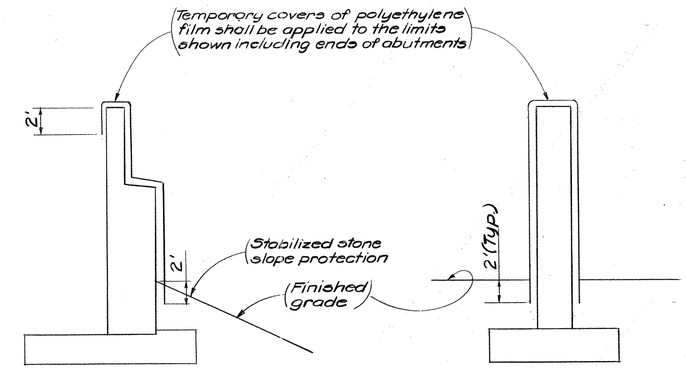


TYPICAL STAIN PROTECTION COVERS

N. T. S.

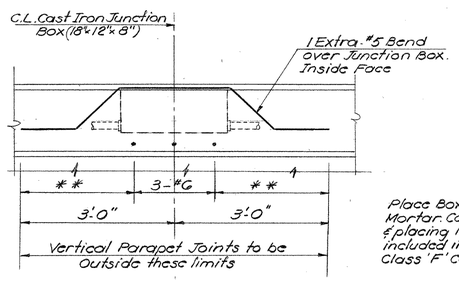


ELEVATION

For Reinforcement not shown see Wingwall Details.

For location of Junction Box see Shts. 1, 7 & 15.

** The vertical Parapet Reinforcement is to be double (#6 @ 6") within these limits

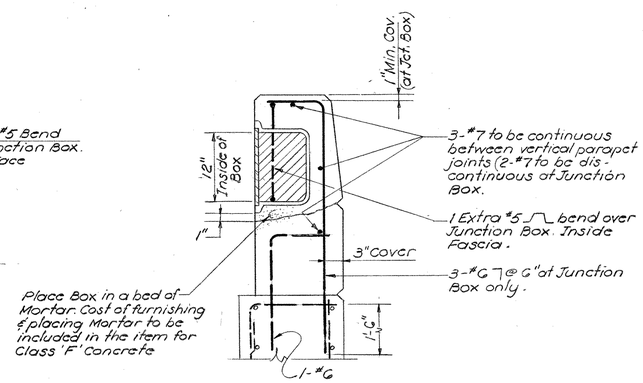


SECTION AT WINGWALL

PARAPET REINF. AT JUNCTION BOX

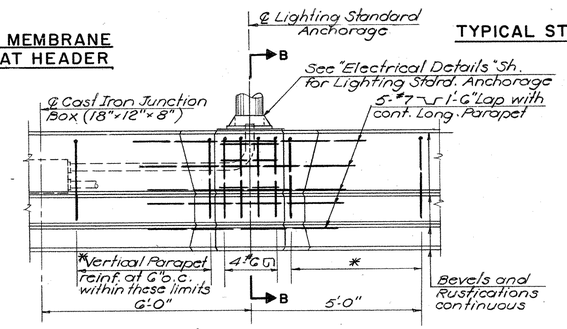


LIGHTING STANDARD

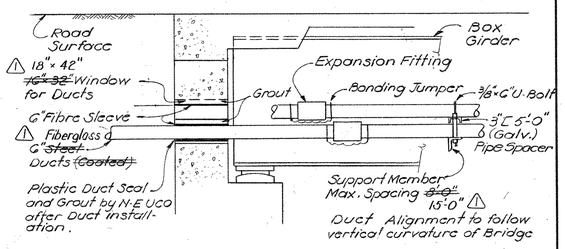


SECTION THRU ABUTMENT

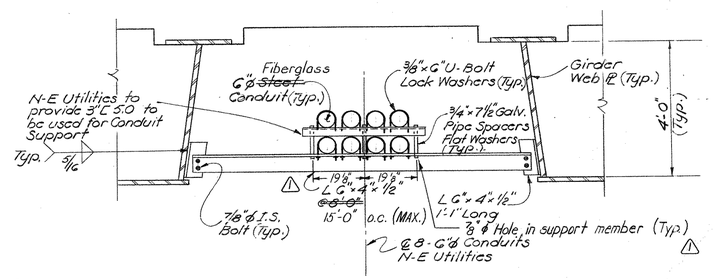


SUPPORT MEMBERS (SM) AND U-BOLTS

Scale: 1/2" = 1'-0"

Structural Steel Support System (LG"×4"×1/2") to be furnished & installed under this Contract.

Structural Steel for Support System paid for under "Structural Steel Bridge No. 42-213-1"

NOTES:

N.E Utilities to provide and install Sleeves, 6" ϕ Ducts and Fittings, U-Bolts, 3" Channel, Pipe Spacers, Bolts, Nuts and Washers. All other Items of Support System of these Conduits included in this Contract.

For location of N-E Utilities Conduits, see Str. Sts. 1, 2, 4, 5 & 11

For Details of longitudinal and vertical Parapet reinforcing not shown see Slab Details Str. Sh.

For Details of Longitudinal and Vertical Parapet Reinforcing not shown, see Slab Details Str. Sh. 17.

2" Cover unless shown otherwise.

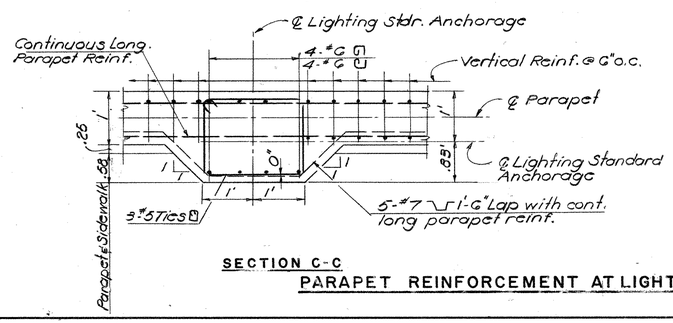


SECTION C-C

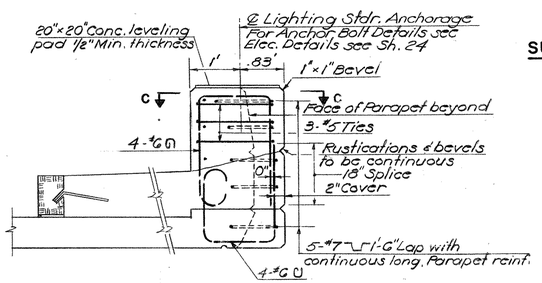


SECTION B-B

PARAPET REINFORCEMENT AT LIGHTING STANDARD

| NO. | DATE | DESCRIPTION |
|---|---|---|
| 1 | 3/84 | Dimension Revisions |

REVISIONS

CONNECTICUT
DEPARTMENT OF TRANSPORTATION

EAST HARTFORD — MANCHESTER

RECONSTRUCTION OF INTERSTATE ROUTE 84
E.B. & W.B. ROADWAYS
UNDER
SIMMONS ROAD

MISCELLANEOUS DETAILS

ENGINEER DE LEUW CATHER & COMPANY
DESIGNER J.K. DRAFTSMAN E.H. CHECKER E.S.
APPROVED D.D.P. DATE
STRUCTURE NO. 42-213-1 SHEET NO. 20 OF 32

42-213

514 01 FOR INFORMATION ONLY 338

| REV. | DATE | REVISION DESCRIPTION |
|---|---|---|
| - | - | - |
| - | - | - |
| - | - | - |
| - | - | - |
| - | - | - |
| - | - | - |
| - | - | - |

THE INFORMATION, INCLUDING ESTIMATED QUANTITIES OF WORK, SHOWN ON THESE SHEETS IS BASED ON LIMITED INVESTIGATIONS BY THE STATE AND IS IN NO WAY WARRANTED TO INDICATE THE CONDITIONS OF ACTUAL QUANTITIES OF WORK WHICH WILL BE REQUIRED.

NOT TO SCALE

STATE OF CONNECTICUT
DEPARTMENT OF TRANSPORTATION

SIGNATURE/BLOCK: OFFICE OF ENGINEERING

APPROVED BY:

PROJECT TITLE: REPLACEMENT OF OVERHEAD SIGN SUPPORTS ON VARIOUS ROUTES STATEWIDE

TOWN: VARIOUS

DRAWING TITLE: FOR INFORMATION ONLY

PROJECT NO. 170-3303

DRAWING NO. FIO-22

SHEET NO. 010.023

FORM NO. ENG 15A ED 1-70

| F.H.W.A. REGION | STATE | TOWN | FED. AID PROJ. NO. | PROJ. NO. | YEAR | ROUTE NO. | SHEET NO. | TOTAL SHEETS |
|---|---|---|---|---|---|---|---|---|
| 1 | CONN. | E.HARTFORD-MANCHESTER | I-84-4(105)65 | 42-213 | 1983 | I-84/186 | 339 | 1020 |

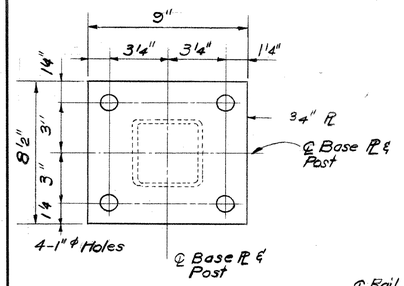


**SECTION B-B**
Scale 3"=1'-0"

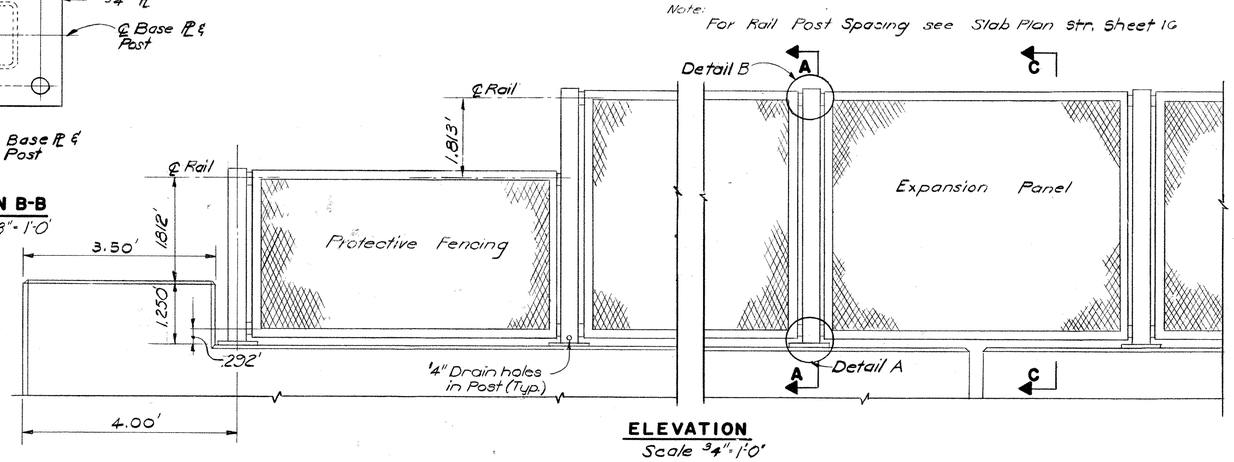


**ELEVATION**
Scale ¾"=1'-0"

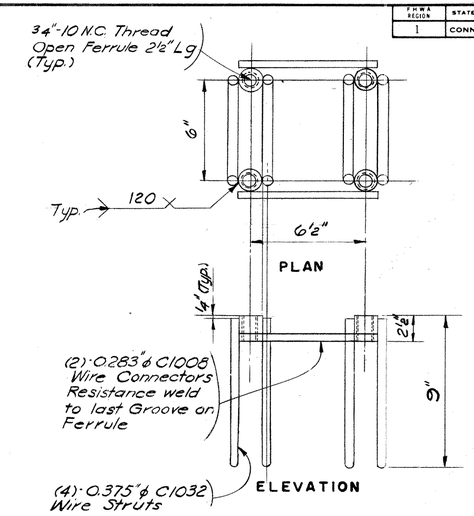


Note: All Anchorage Material to be galvanized except for Cap Bolts & Washer

**PRESET ANCHORAGE DETAILS**
Scale 3"=1'0"

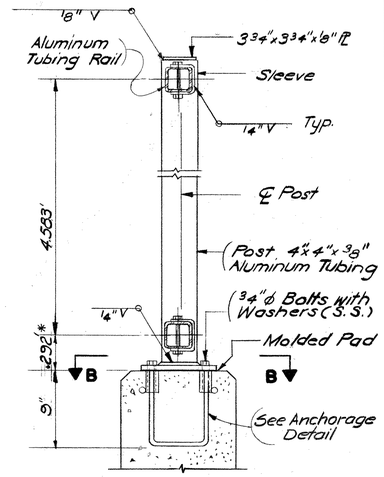


**SECTION A-A**
Scale 1½"=1'-0"

* Lower opening to 1" clear if possible

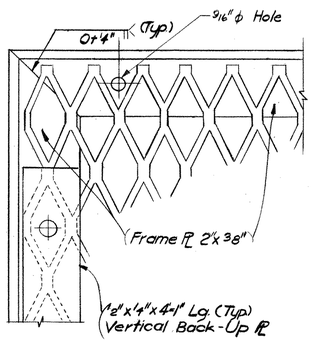


**CORNER DETAIL**

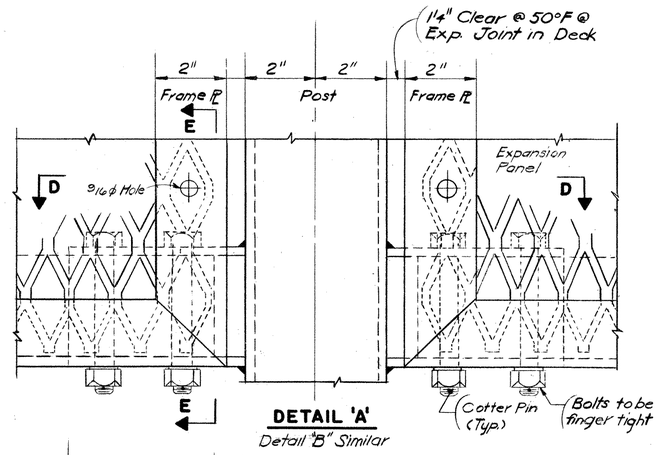


**DETAIL 'A'**
Detail "B" Similar

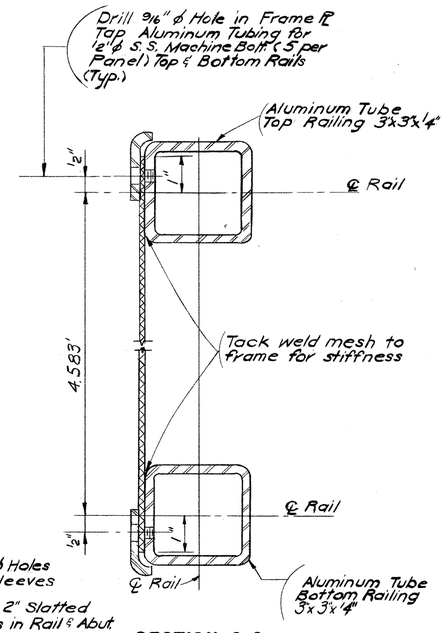


**SECTION C-C**

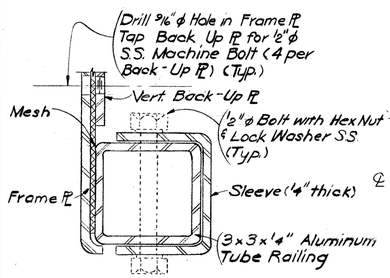


**SECTION E-E**

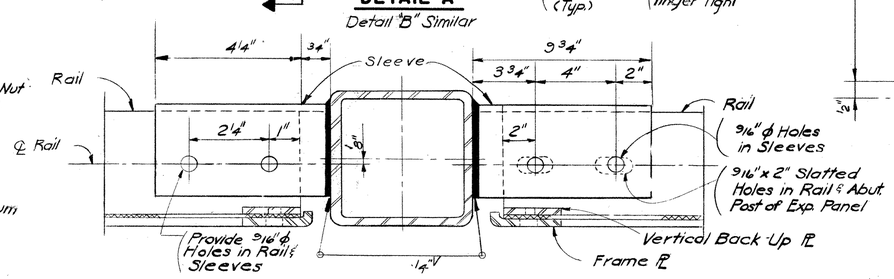


**SECTION D-D**

## NOTES:

ALL RAILING IS TO BE FABRICATED AND ERECTED SO THAT THE RAILS ARE PARALLEL TO EACH OTHER AND TO THE PARAPET AND SO THAT THE POSTS ARE TRULY VERTICAL.
THE CONTRACTOR SHALL VERIFY DIMENSIONS IN THE FIELD BEFORE ANY SHOP FABRICATION IS PERFORMED TO ASSURE THAT THE FINISHED FENCE MEETS ALL REQUIREMENTS OF FIT AND ALIGNMENT TO THE SATISFACTION OF THE ENGINEER.

THE FENCE MATERIAL SHALL BE ALUMINUM EXPANDED METAL (TYPE 1¼/0" NO. .250"-21bs.) AS MADE BY KEEN CORPORATION OR APPROVED EQUAL. ALL EDGES OF THE EXPANDED METAL MESH SHALL BE DEBURRED BY USING BLAST CLEANING EQUIPMENT. THE FINISH SURFACE SHALL BE SMOOTH TO THE TOUCH WITH NO CUTTING EDGES OR CORNERS.

THE EXPANDED METAL MESH SHALL BE ALUMINUM WITH A MEDIUM BRONZE ARCHITECTURAL INTEGRAL-COLOR FINISH (DURANODIC) WHICH SHALL BE APPLIED AFTER ALL WELDING IS COMPLETED.

RAILS, POSTS AND BARS SHALL BE ALUMINUM AND SHALL HAVE A MEDIUM BRONZE INTEGRAL-COLOR FINISH WHICH SHALL BE APPLIED AFTER ALL WELDING IS COMPLETED.

THE HARDWARE, EXCEPT AS OTHERWISE NOTED, SHALL BE STAINLESS STEEL CONFORMING TO ASTM A193 GRADE B8 WITH A PERMANENT FINISH SIMULATING THAT OF THE POSTS. ALL FASTENING BOLTS ARE TO BE COATED WITH LOCTITE.

CONNECTICUT
DEPARTMENT OF TRANSPORTATION
EAST HARTFORD — MANCHESTER
RECONSTRUCTION OF INTERSTATE ROUTE 84
E.B. & W.B. ROADWAYS
UNDER
SIMMONS ROAD

METAL BRIDGE RAIL-PROTECTIVE FENCE

| NO. | DATE | DESCRIPTION |
|---|---|---|
| | | |

REVISIONS

ENGINEER DE LEUW CATHER & COMPANY
DESIGNER | DRAFTSMAN M.A.M. | CHECKER
APPROVED | DATE
STRUCTURE NO. 42-213-1 | BRIDGE LOG NO. | STRUCTURE SHEET NO. 21 OF 32

42-213

514 01 FOR INFORMATION ONLY 339

| REV. | DATE | REVISION DESCRIPTION |
|---|---|---|
| - | - | - |
| - | - | - |
| - | - | - |
| - | - | - |
| - | - | - |
| - | - | - |
| - | - | - |

THE INFORMATION, INCLUDING ESTIMATED QUANTITIES OF WORK, SHOWN ON THESE SHEETS IS BASED ON LIMITED INVESTIGATIONS BY THE STATE AND IS IN NO WAY WARRANTED TO INDICATE THE CONDITIONS OF ACTUAL QUANTITIES OF WORK WHICH WILL BE REQUIRED.

NOT TO SCALE

STATE OF CONNECTICUT
DEPARTMENT OF TRANSPORTATION

SIGNATURE/BLOCK: OFFICE OF ENGINEERING
APPROVED BY:

PROJECT TITLE: REPLACEMENT OF OVERHEAD SIGN SUPPORTS ON VARIOUS ROUTES STATEWIDE

TOWN: VARIOUS

DRAWING TITLE: FOR INFORMATION ONLY

PROJECT NO. 170-3303
DRAWING NO. FIO-23
SHEET NO. 010.023

FORM NO. ENG. 158 ED. 1-75

| F.H.W.A. REGION | STATE | TOWN | FED. AID PROJ. NO. | PROJ. NO. | YEAR | ROUTE NO. | SHEET NO. | TOTAL SHEETS |
|---|---|---|---|---|---|---|---|---|
| 1 | CONN. | E.HARTFORD-MANCHESTER | I-84-4(105)65 | 42-213 | 1983 | I-84/186 | 340 | 1020 |

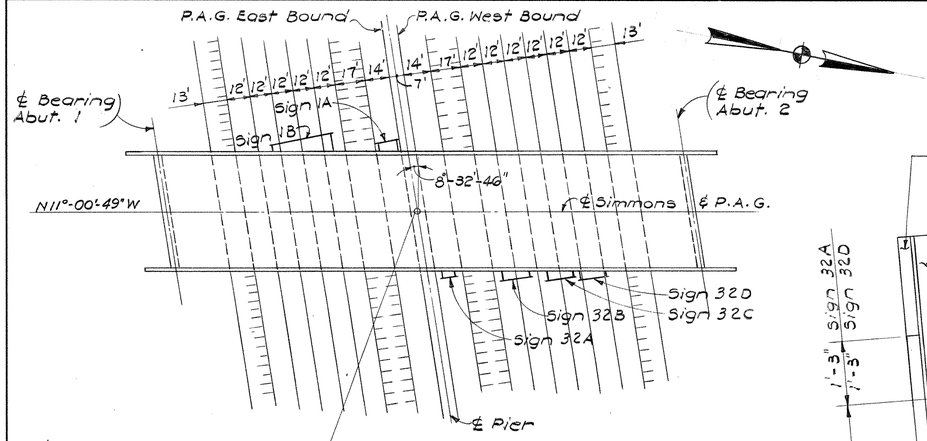


**LOCATION PLAN**
Scale: 1" = 40'

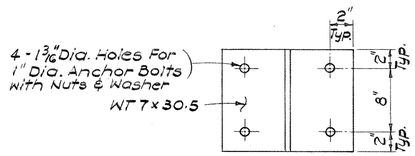


**SECTION C-C**
Not to Scale.

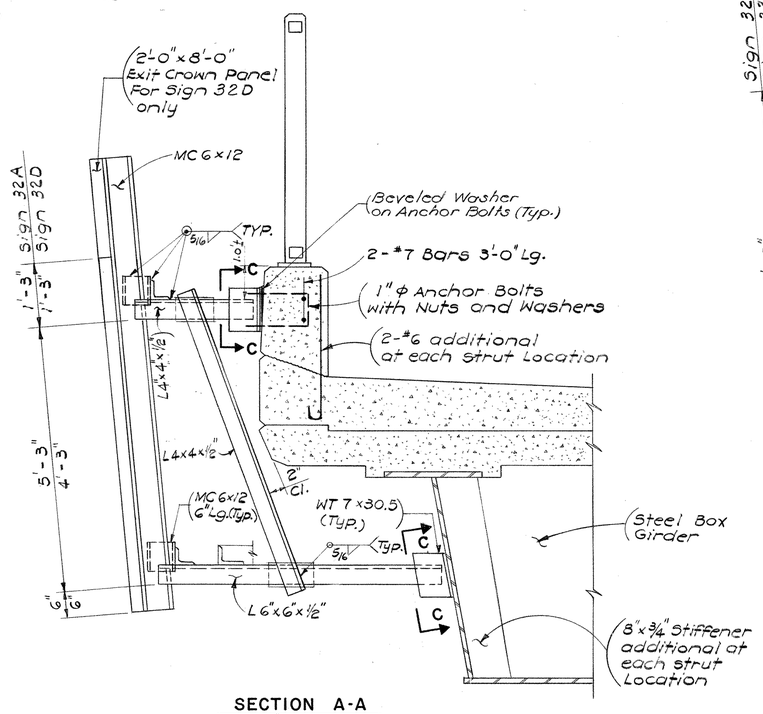


**SECTION A-A**
Scale: 3/4" = 1'-0"

NOTES:
All Bottom Diagonals shall be L4"x4"x1/2"

For additional Stiffener See Str. Sht. 11

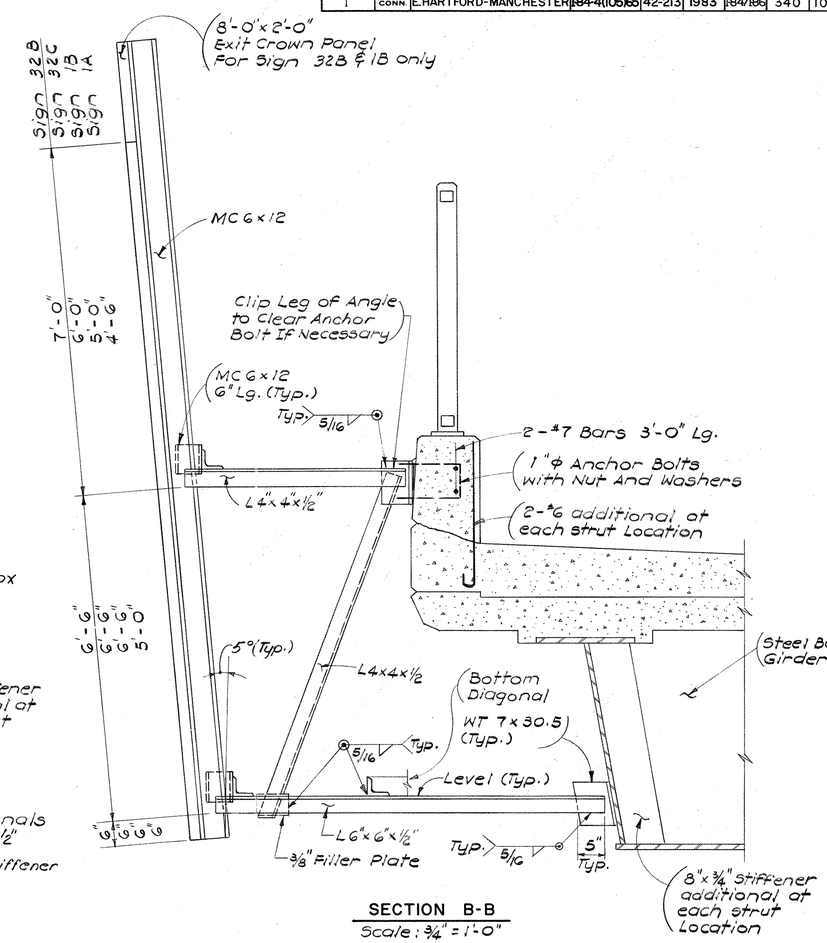


**SECTION B-B**
Scale: 3/4" = 1'-0"

For Orientation of sign 1A see Location Plan this sheet and Str. Sh. 23.

For stiffeners Details see Detail "A" and Detail "B" on sheet 16

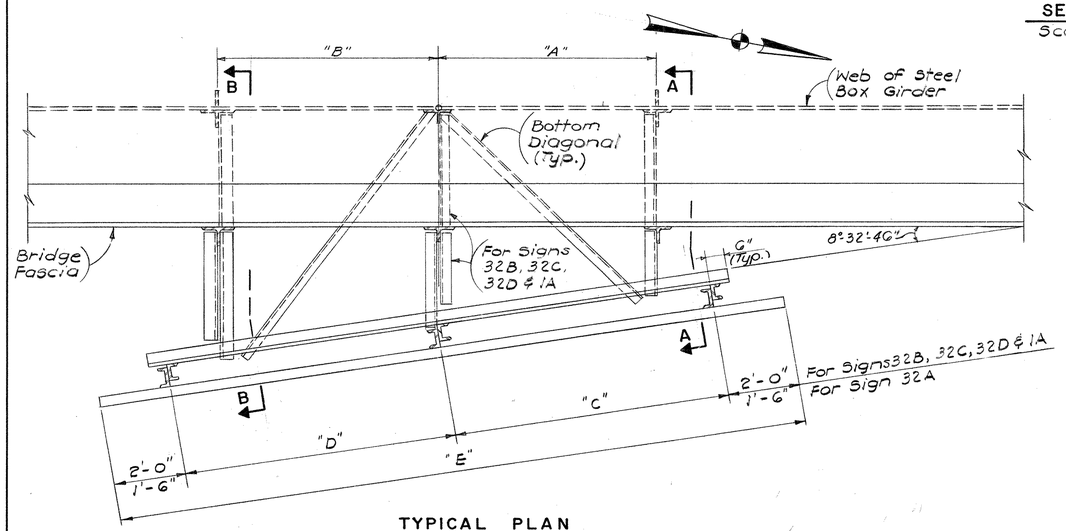


**TYPICAL PLAN**
Scale: 1/2" = 1'-0"

| DIMENSIONS & STATIONS OF SIGN STRUCTURES | | | | | | |
|---|---|---|---|---|---|---|
| SIGN NUMBER | A | B | C | D | E | ℄ STATION |
| 32A | 3'-0" | 2'-6" | 3'-6" | 3'-6" | 10'-0" | 10+16.35 |
| 32B | 6'-2" | 6'-8" | 7'-9" | 7'-9" | 19'-6" | 10+52.24 |
| 32C | 5'-5" | 5'-5" | 6'-6" | 7'-0" | 18'-0" | 10+76.51 |
| 32D | 5'-5" | 5'-5" | 8'-0" | 6'-0" | 18'-0" | 10+94.72 |
| 1A | 6'-2" | 6'-2" | 7'-9" | 7'-9" | 19'-6" | 9+83.65 |
| 1B | SEE TYPICAL PLAN ON SH. 23 | | | | | 9+35.62 |

| NO. | DATE | DESCRIPTION |
|---|---|---|
| | | |
| | | |
| | | |
| | | |
| | | |
| | | |
| | | |
| | | |

REVISIONS

# CONNECTICUT
DEPARTMENT OF TRANSPORTATION

EAST HARTFORD – MANCHESTER

RECONSTRUCTION OF INTERSTATE ROUTE 84
E.B. & W.B. ROADWAYS
UNDER
SIMMONS ROAD

SIGN STRUCTURES - I

ENGINEER DE LEUW CATHER & COMPANY
DESIGNER J.C. DRAFTSMAN T.G. CHECKER E.S.
APPROVED DATE
STRUCTURE NO. 42-213-1 BRIDGE LOG NO. STRUCTURE SHEET NO. 22 OF 32

42-213

514 01 FOR INFORMATION ONLY 840

| REV. | DATE | REVISION DESCRIPTION |
|---|---|---|
| - | - | - |
| - | - | - |
| - | - | - |
| - | - | - |
| - | - | - |
| - | - | - |
| - | - | - |
| - | - | - |

THE INFORMATION, INCLUDING ESTIMATED QUANTITIES OF WORK, SHOWN ON THESE SHEETS IS BASED ON LIMITED INVESTIGATIONS BY THE STATE AND IS IN NO WAY WARRANTED TO INDICATE THE CONDITIONS OF ACTUAL QUANTITIES OF WORK WHICH WILL BE REQUIRED.

NOT TO SCALE

STATE OF CONNECTICUT
DEPARTMENT OF TRANSPORTATION

SIGNATURE/BLOCK: OFFICE OF ENGINEERING
APPROVED BY:

PROJECT TITLE: REPLACEMENT OF OVERHEAD SIGN SUPPORTS ON VARIOUS ROUTES STATEWIDE

TOWN: VARIOUS

DRAWING TITLE: FOR INFORMATION ONLY

PROJECT NO. 170-3303
DRAWING NO. FIO-24
SHEET NO. 010.024

FORM NO. ENG 158 ED 4-80

| F.H.W.A. REGION | STATE | TOWN | FED. AID PROJ. NO. | PROJ. NO. | YEAR | ROUTE NO. | SHEET NO. | TOTAL SHEETS |
|---|---|---|---|---|---|---|---|---|
| 1 | CONN. | E.HARTFORD-MANCHESTER | I-84-4(105)65 | 42-213 | 1983 | I84/186 | 341 | 1020 |

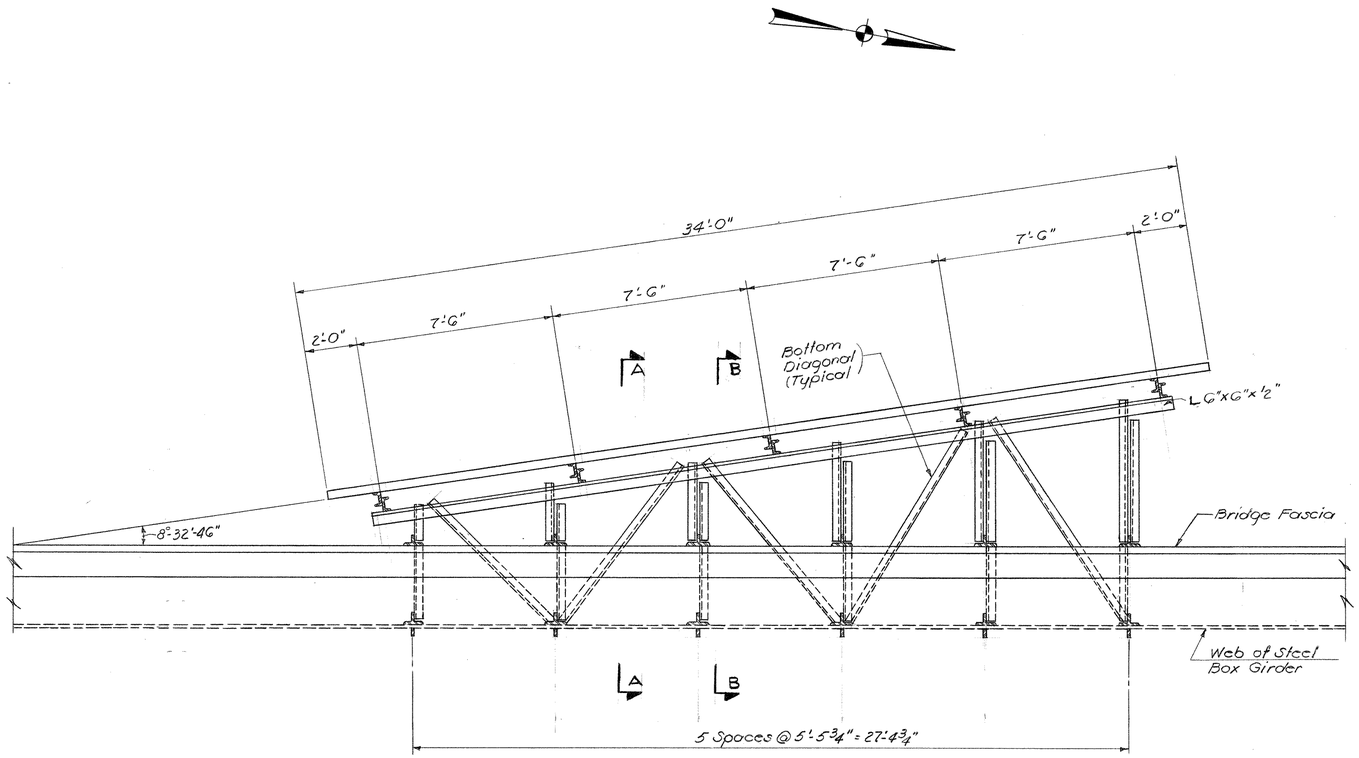


TYPICAL PLAN
(SIGN 1B)
Scale: 3/8" = 1'-0"

Orientation for Sign 1A Similar

For Section A-A and B-B see Str. Sh. 22.

## NOTES:

SPECIFICATIONS:
Connecticut Department of Transportation, form 812 (1978), Interim Specifications and Special Provisions.

DESIGN SPECIFICATIONS:
Standard Specifications for Highway Bridges (A.A.S.H.T.O. 1977) with Interim Specifications up to and including 1982 as supplemented by The Connecticut Department of Transportation Bridge Manual (1964) and A.A.S.H.T.O. Standard Specifications for Structural Supports for Highway Signs, Luminaires and Traffic Signals.

ALLOWABLE DESIGN STRESSES:
Reinforcement: (ASTM A615 Grade 60), fs = 24,000 p.s.i.
Structural Steel (A588 fc = 27,000 p.s.i.) to all thicknesses to 4" inclusive. Anchor Bolts, Hex-nuts and Washers - ASTM A325

WELDING:
All Weld Details shall comform to AWS D1.1-80

PAYMENT:
Structural Steel in the Sign supports will be paid for as part of the Contract Lump Sum price for "Structural Steel Bridge No. 42-213-1

PAINTING:
Bridge and Sign Support are weathering steel, not to be painted.

| NO. | DATE | DESCRIPTION |
|---|---|---|
| | | |
| | | |
| | | |
| | | |
| | | |

REVISIONS

CONNECTICUT
DEPARTMENT OF TRANSPORTATION

EAST HARTFORD – MANCHESTER

RECONSTRUCTION OF INTERSTATE ROUTE 84
E.B. & W.B. ROADWAYS
UNDER
SIMMONS ROAD

SIGN STRUCTURES - 2

ENGINEER DE LEUW CATHER & COMPANY
DESIGNER J.C. | DRAFTSMAN C.O. | CHECKER E.S.
APPROVED | DATE
STRUCTURE NO. 42-213-1 | BRIDGE LOG NO. | STRUCTURE SHEET NO. 23 OF 32

42-213

514 01 FOR INFORMATION ONLY 241

| REV. | DATE | REVISION DESCRIPTION |
|---|---|---|
| - | - | - |
| - | - | - |
| - | - | - |
| - | - | - |
| - | - | - |
| - | - | - |
| - | - | - |

THE INFORMATION, INCLUDING ESTIMATED QUANTITIES OF WORK, SHOWN ON THESE SHEETS IS BASED ON LIMITED INVESTIGATIONS BY THE STATE AND IS IN NO WAY WARRANTED TO INDICATE THE CONDITIONS OF ACTUAL QUANTITIES OF WORK WHICH WILL BE REQUIRED.

NOT TO SCALE

STATE OF CONNECTICUT
DEPARTMENT OF TRANSPORTATION

SIGNATURE/BLOCK:
OFFICE OF ENGINEERING
APPROVED BY:

PROJECT TITLE:
REPLACEMENT OF OVERHEAD SIGN SUPPORTS ON VARIOUS ROUTES STATEWIDE

TOWN: VARIOUS

DRAWING TITLE: FOR INFORMATION ONLY

PROJECT NO. 170-3303
DRAWING NO. FIO-25
SHEET NO. 010.025

| FED. ROAD DIV. NO. | STATE | TOWN | FED. AID PROJ. NO. | PROJ. NO. | YEAR | SCHEDULE NO. | SHEET NO. | TOTAL SHEETS |
|---|---|---|---|---|---|---|---|---|
| 1 | CONN. | E. HARTFORD-MANCHESTER | I-84-4 (105)65 | 42-213 | 1983 | 1-84/1-86 | 342 | 1020 |

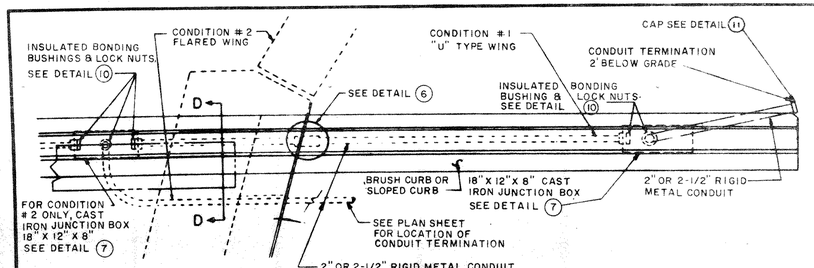


NOTE:
1. UTILIZE 30° BENDS TO FACILITATE CONDUIT LEAVING WINGWALL AT 2'-0" BELOW GRADE.
2. CONDUIT BENDS SHALL HAVE A RADIUS OF NOT LESS THAN 6 TIMES THE TRADE SIZE OF CONDUIT.

1 CONDUIT PARAPET TO FILL
PLAN SCALE 1/2" = 1'

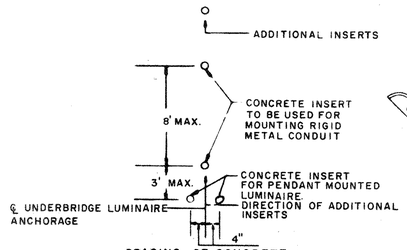


SPACING OF CONCRETE INSERTS IN DECK SLAB

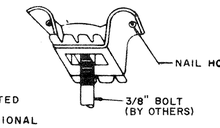


SPACING MAY BE ADJUSTED TO PROVIDE 1" CLEARANCE FROM REINFORCING BARS

4 CONCRETE INSERT DETAIL
NOT TO SCALE

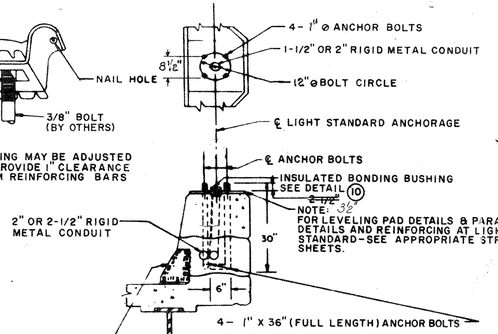


NOTE: FOR LEVELING PAD DETAILS & PARAPET DETAILS AND REINFORCING AT LIGHT STANDARD-SEE APPROPRIATE STRUCTURE SHEETS.

4- 1" X 36" (FULL LENGTH) ANCHOR BOLTS SHALL BE HIGH STRENGTH STEEL HAVING A MINIMUM YIELD OF 50,000 P.S.I. HEX NUTS, WASHERS & THREADED ENDS OF ANCHOR BOLTS FOR A LENGTH OF 6" SHALL BE GALVANIZED IN CONFORMANCE WITH A.S.T.M. A-153. FURNISHING & INSTALLING ANCHOR BOLTS SHALL BE PAID FOR AT THE UNIT PRICE BID FOR DEFORMED STEEL BARS.

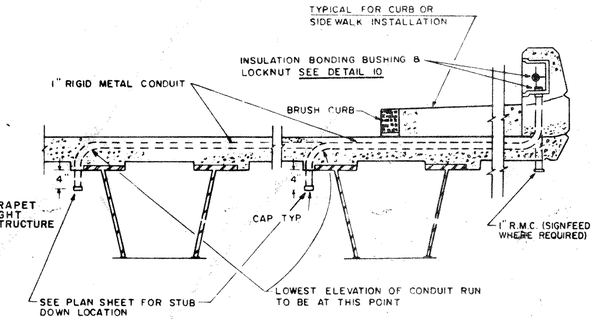


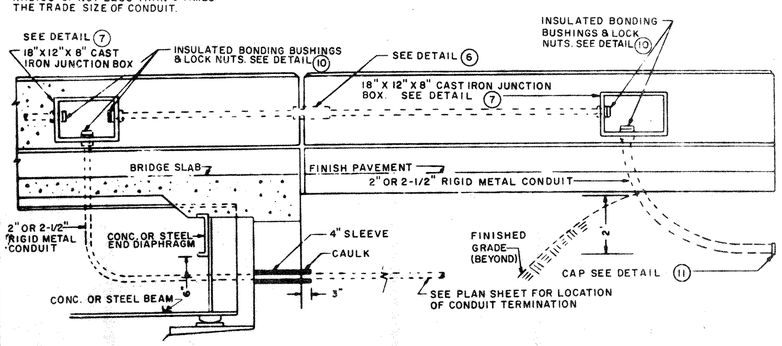


2 CONDUIT PARAPET TO FILL
ELEVATION SCALE 1/2" = 1'

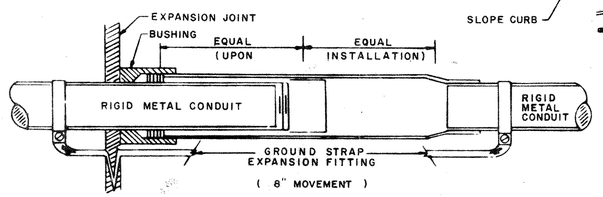


6 DETAIL OF EXPANSION FITTING
USE AT ALL EXPANSION JOINTS
NOT TO SCALE

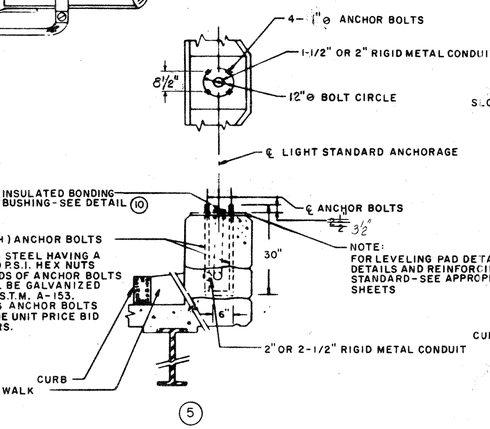


4- 1" X 36" (FULL LENGTH) ANCHOR BOLTS SHALL BE HIGH STRENGTH STEEL HAVING A MINIMUM YIELD OF 50,000 P.S.I. HEX NUTS WASHERS & THREADED ENDS OF ANCHOR BOLTS FOR A LENGTH OF 6" SHALL BE GALVANIZED IN CONFORMANCE WITH A.S.T.M. A-153. FURNISHING & INSTALLING ANCHOR BOLTS SHALL BE PAID FOR AT THE UNIT PRICE BID FOR DEFORMED STEEL BARS.

NOTE: FOR LEVELING PAD DETAILS & PARAPET DETAILS AND REINFORCING AT LIGHT STANDARD-SEE APPROPRIATE STRUCTURE SHEETS

5

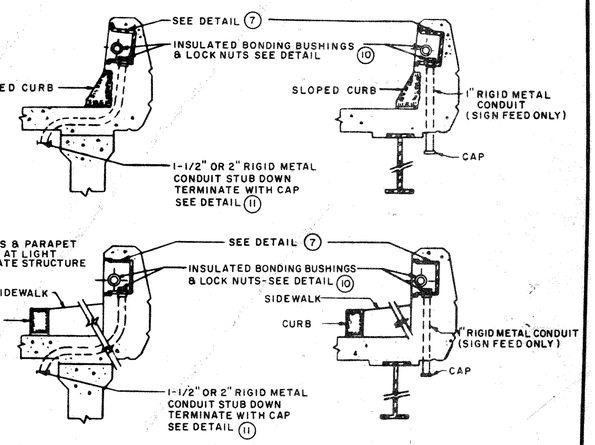


9 SERVICE TO LUMINAIRE UNDER STRUCTURE
(USE APPLICABLE DETAIL)
NOT TO SCALE

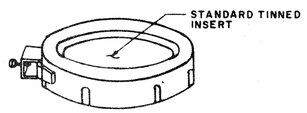


10 CAPPED INSULATED BONDING BUSHING WITH GROUND LUG
NOT TO SCALE

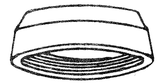

11 MALLEABLE IRON CAP
NOT TO SCALE

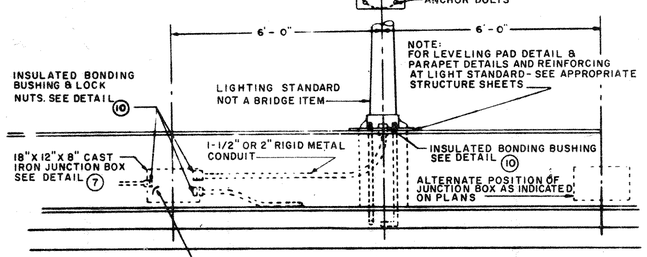


NOTE: FOR PARAPET AND REINFORCING DETAILS AT JUNCTION BOX. SEE APPROPRIATE STRUCTURE SHEET

3 LIGHTING STANDARD ON PARAPET WALL
SCALE 1/2" = 1'

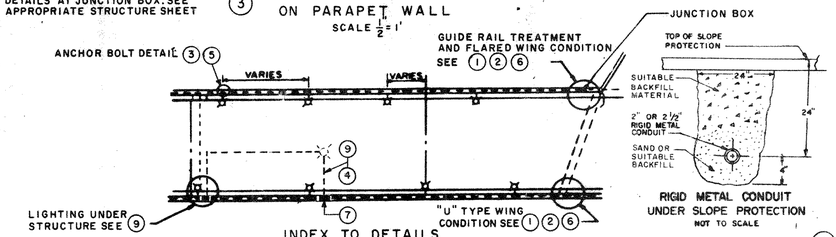


INDEX TO DETAILS
NOT TO SCALE

12

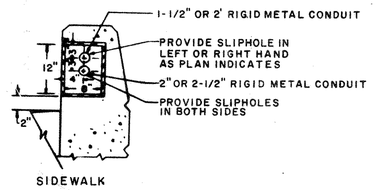


7 JUNCTION BOX INSTALLATION
(USE APPLICABLE DETAIL)
NOT TO SCALE

NOTE:
FOR PARAPET AND REINFORCING DETAILS AT JUNCTION BOX, SEE APPROPRIATE STRUCTURE SHEET.

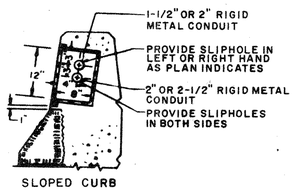


SLOPED CURB

* NOTE: FOR DETAILS THAT APPLY ONLY

| | DET. NO. | DESCRIPTION |
|---|---|---|
| * | 1 | CONDUIT PARAPET TO FILL |
| * | 2 | CONDUIT PARAPET TO FILL |
| * | 3 | LIGHTING STANDARD ON PARAPET WALL |
| | 4 | CONCRETE INSERT |
| * | 5 | PARAPET TREATMENT AT LIGHT STANDARD |
| * | 6 | DETAIL OF EXPANSION FITTING |
| * | 7 | JUNCTION BOX INSTALLATION |
| | 8 | |
| * | 9 | SERVICE TO LUMINAIRE UNDER STRUCTURE |
| * | 10 | CAPPED INSULATED BONDING BUSHING WITH GROUND LUG |
| * | 11 | MALLEABLE IRON CAP |
| | 12 | RIGID METAL CONDUIT UNDER SLOPE PROTECTION |

| ABBREVIATIONS & TERMS | |
|---|---|
| ℄ L.S.A. | - ℄ LIGHT STANDARD ANCHORAGE |
| R.M.C. (S.P.) | - RIGID METAL CONDUIT UNDER SLOPE PROTECTION |
| R.M.C. STR. | - RIGID METAL CONDUIT IN STRUCTURE |
| C.I.J.B. | - CAST IRON JUNCTION BOX |
| ℄ U.L.A. | - ℄ UNDERBRIDGE LUMINAIRE ANCHORAGE |
| R.M.C. (SD) | - RIGID METAL CONDUIT STUB DOWN |

**CONNECTICUT**
**DEPARTMENT OF TRANSPORTATION**
**BUREAU OF HIGHWAYS**

EAST HARTFORD - MANCHESTER

RECONSTRUCTION OF INTERSTATE ROUTE 84
E.B. & W.B. ROADWAYS
UNDER
SIMMONS ROAD

ELECTRICAL DETAILS

ENGINEER: ELECTRICAL ENGINEERING SECTION
APPROVED: T. Hamson Jr. DATE: 1-2-75
DRAFTSMAN: J.C.D. CHECKER: R.D.S. DESIGNER: R.G.H.-S.P.K.
STRUCTURE NO. 42-213-1 STRUCTURE SHEET 24 OF 32

24a

42-213

514 01 FOR INFORMATION ONLY 010

| REV. | DATE | REVISION DESCRIPTION |
|---|---|---|
| - | - | - |
| - | - | - |
| - | - | - |
| - | - | - |
| - | - | - |
| - | - | - |
| - | - | - |

THE INFORMATION, INCLUDING ESTIMATED QUANTITIES OF WORK, SHOWN ON THESE SHEETS IS BASED ON LIMITED INVESTIGATIONS BY THE STATE AND IS IN NO WAY WARRANTED TO INDICATE THE CONDITIONS OF ACTUAL QUANTITIES OF WORK WHICH WILL BE REQUIRED.

NOT TO SCALE

STATE OF CONNECTICUT
DEPARTMENT OF TRANSPORTATION

SIGNATURE/BLOCK: OFFICE OF ENGINEERING
APPROVED BY:

PROJECT TITLE: REPLACEMENT OF OVERHEAD SIGN SUPPORTS ON VARIOUS ROUTES STATEWIDE

TOWN: VARIOUS

DRAWING TITLE: FOR INFORMATION ONLY

PROJECT NO. 170-3303
DRAWING NO. FIO-26
SHEET NO. 010.026