09 - EXTRUDED ALUMINUM SIGN PANEL DETAILS

INDEX OF DRAWINGS

DRAWING NUMBER	DRAWING TITLE	DRAWING NUMBER	DRAWING TITLE
S-1	INDEX OF DRAWINGS		
S-2	EXTRUDED ALUMINUM SIGN PANEL CONNECTION DETAILS		
S-3	EXTRUDED ALUMINUM SIGN PANEL MANUFACTURING DETAILS		

THE DESIGN APPEARS TO CONFORM TO APPLICABLE CRITERIA. APPROVAL IS NOT TO BE CONSTRUED TO MEAN THAT ALL ASPECTS OF THE DESIGN HAVE BEEN PERSONALLY CHECKED BY THE UNDERSIGNED.

Rabih M. Barakat P.E.

Digitally signed by Rabih M. Barakat P.E.
DN: CN=Rabih M. Barakat P.E., O=State of Connecticut, Email=rabih.barakat@ct.gov, OU=Department of Transportation, OU=Transportation Principal Engineer of Bridge Design, OU=Division of Bridges and Facilities, L=Newington, S=Connecticut, C=US
Date: 2015.06.17 11:51:15-04'00'

TRANSPORTATION PRINCIPAL ENGINEER

REV.	DATE	REVISION DESCRIPTION	SHEET NO.

THE INFORMATION, INCLUDING ESTIMATED QUANTITIES OF WORK, SHOWN ON THESE SHEETS IS BASED ON LIMITED INVESTIGATIONS BY THE STATE AND IS IN NO WAY WARRANTED TO INDICATE THE CONDITIONS OF ACTUAL QUANTITIES OF WORK WHICH WILL BE REQUIRED.

Plotted Date: 6/16/2015

DESIGNER/DRAFTER: BU

CHECKED BY: RDD

SCALE AS NOTED

STATE OF CONNECTICUT
DEPARTMENT OF TRANSPORTATION

Filename: ..\SB..1..Index Sheet.dgn

SIGNATURE/ BLOCK:

OFFICE OF ENGINEERING

APPROVED BY:

PROJECT TITLE:

REPLACEMENT OF OVERHEAD SIGN SUPPORTS ON VARIOUS ROUTES STATEWIDE

TOWN: VARIOUS

DRAWING TITLE: INDEX SHEET

PROJECT NO. 170-3303

DRAWING NO. S-1

SHEET NO. 09.01

Connecticut Department of Transportation
QA/QC Format Check

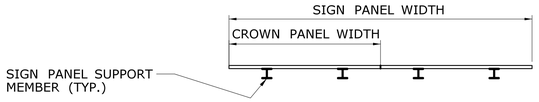

PLAN - OVERHEAD MOUNTED SIGN PANEL

SCALE: 1/4" = 1' - 0"

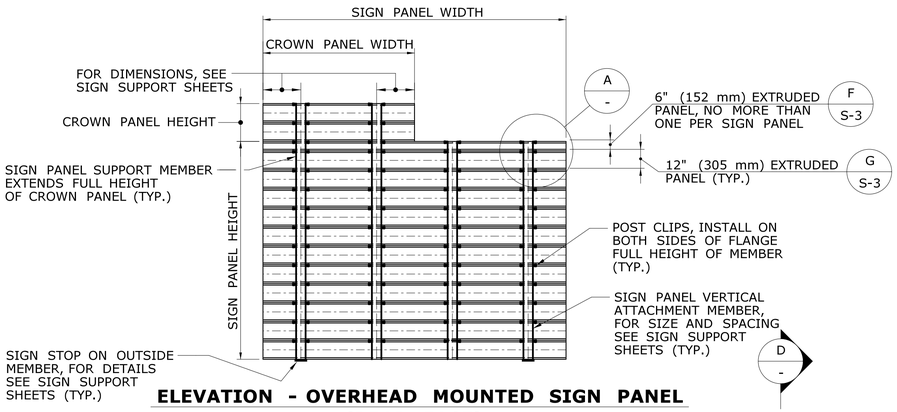

ELEVATION - OVERHEAD MOUNTED SIGN PANEL (REAR FACE)

SCALE: 1/4" = 1' - 0"

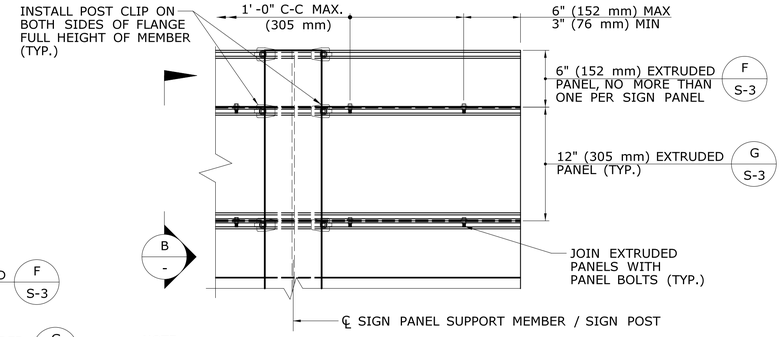

NOTE:

THE EXTRUDED ALUMINUM SIGN PANELS SHALL BE CONNECTED TOGETHER WITH PANELS BOLTS INSTALLED IN ACCORDANCE WITH THE SPACING CRITERIA SHOWN. IF THE PANEL BOLTS CANNOT BE INSTALLED DUE TO MISALIGNED HOLES, A NEW HOLE(S) SHALL BE INSTALLED IN THE FLANGE OF THE EXTRUDED PANEL. THE NEW HOLE(S) SHALL BE A MINIMUM OF 2" (50 mm) FROM ANY EXISTING PANEL BOLT HOLES.

SIGN PANEL CONNECTION DETAILS A -

SCALE: 1 1/2" = 1'-0"

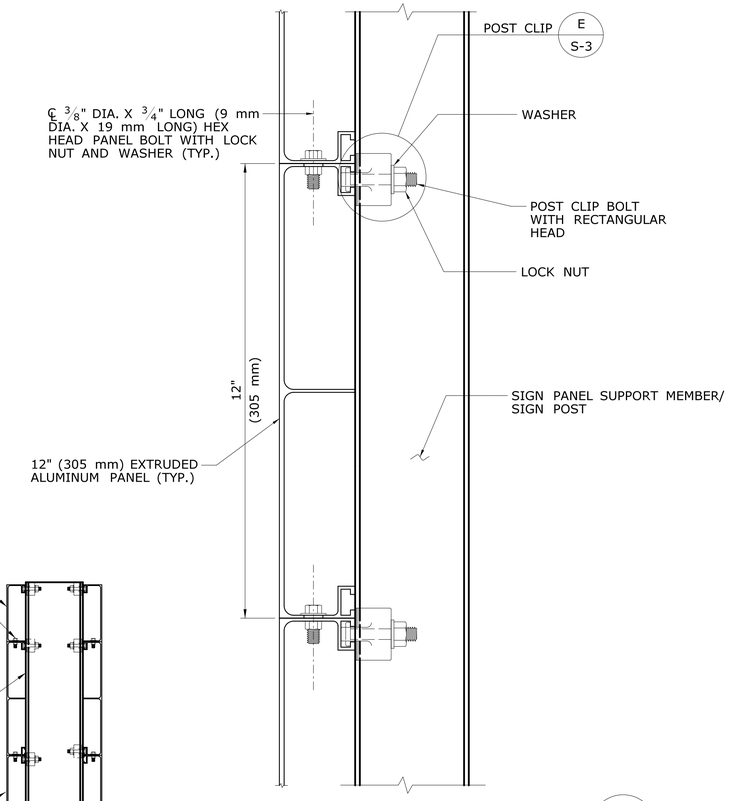

SECTION - SIGN PANEL CONNECTION B -

SCALE: 6" = 1'-0"

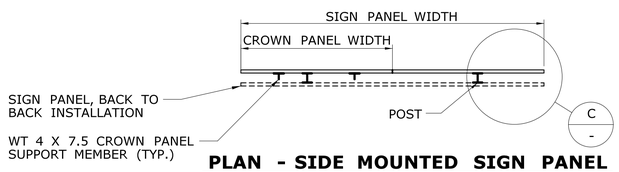

PLAN - SIDE MOUNTED SIGN PANEL

SCALE: 1/4" = 1' - 0"

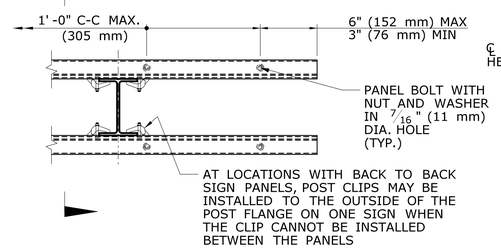

PLAN - PANEL BOLT C -

SCALE: 1 1/2" = 1'-0"

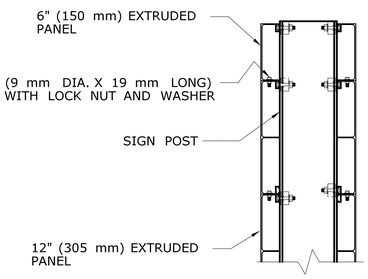

SECTION - DOUBLE PANELS D -

SCALE: 1 1/2" = 1'-0"

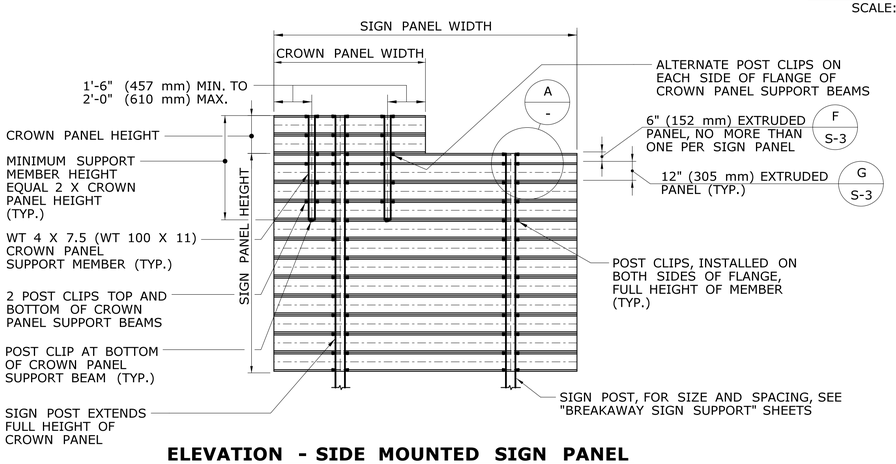

ELEVATION - SIDE MOUNTED SIGN PANEL (REAR FACE)

SCALE: 1/4" = 1' - 0"

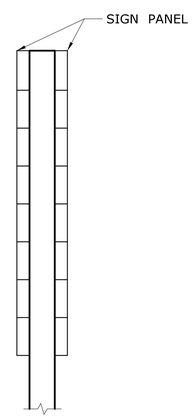

SIDE VIEW

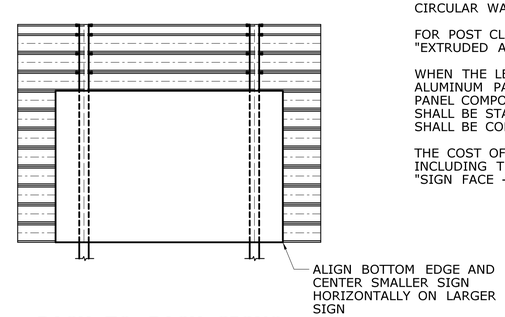

BACK TO BACK SIGNS DIFFERENT SIZES

SCALE: 1/4" = 1' - 0"

NOTES

THE PANEL BOLTS SHALL CONFORM TO ASTM A193, CLASS 1, GRADE B8 (TYPE 304). THE NUTS SHALL BE A COMPATIBLE HEX, PREVAILING TORQUE (NYLON INSERT) LOCK NUTS CONFORMING TO ASTM A194, CLASS 1, GRADE B8 (TYPE 304). THE WASHERS SHALL BE COMPATIBLE, FLAT, CIRCULAR WASHERS CONFORMING TO ASTM A276, TYPE 304, ANNEALED.

FOR POST CLIP ASSEMBLY AND EXTRUDED ALUMINUM PANEL DETAILS SEE DRAWING ENTITLED "EXTRUDED ALUMINUM SIGN PANEL MANUFACTURING DETAILS"

WHEN THE LENGTH OF A SIGN PANEL EXCEEDS THE LENGTH OF THE AVAILABLE EXTRUDED ALUMINUM PANEL COMPONENTS, THE SIGN PANEL SHALL BE FABRICATED WITH VARIOUS LENGTH PANEL COMPONENTS IN A STAGGERED RUNNING BOND PATTERN. THE ENDS OF ADJACENT PANELS SHALL BE STAGGERED A MINIMUM OF 5'-0". EACH EXTRUDED ALUMINUM PANEL COMPONENT SHALL BE CONNECTED TO A MINIMUM OF 2 SIGN PANEL SUPPORT MEMBERS.

THE COST OF FURNISHING AND INSTALLING THE EXTRUDED ALUMINUM SIGN AND CROWN PANELS, INCLUDING THE PANEL BOLTS AND POST CLIP ASSEMBLIES, SHALL BE PAID FOR UNDER THE ITEM "SIGN FACE - EXTRUDED ALUMINUM (TYPE IV RETROREFLECTIVE SHEETING)".

REV.	DATE	REVISION DESCRIPTION	SHEET NO.

THE INFORMATION, INCLUDING ESTIMATED QUANTITIES OF WORK, SHOWN ON THESE SHEETS IS BASED ON LIMITED INVESTIGATIONS BY THE STATE AND IS IN NO WAY WARRANTED TO INDICATE THE CONDITIONS OF ACTUAL QUANTITIES OF WORK WHICH WILL BE REQUIRED.

Plotted Date: 6/16/2015

DESIGNER/DRAFTER: RDD
CHECKED BY: JK
SCALE AS NOTED

STATE OF CONNECTICUT
DEPARTMENT OF TRANSPORTATION

Filename: ...\SB..2..0170..3303..ExtrudedAlSignPanel..ConnectionDetails.dgn

SIGNATURE/ BLOCK: OFFICE OF ENGINEERING
APPROVED BY:

PROJECT TITLE: REPLACEMENT OF OVERHEAD SIGN SUPPORTS ON VARIOUS ROUTES STATEWIDE

TOWN: VARIOUS

DRAWING TITLE: EXTRUDED ALUMINUM SIGN PANEL CONNECTION DETAILS

PROJECT NO. 170-3303
DRAWING NO. S-2
SHEET NO. 09.02

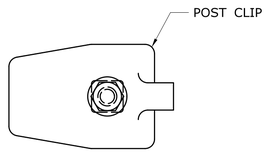

PLAN

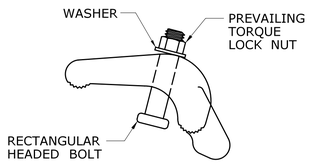

ELEVATION

POST CLIP DETAIL (E / -)
FULL SCALE

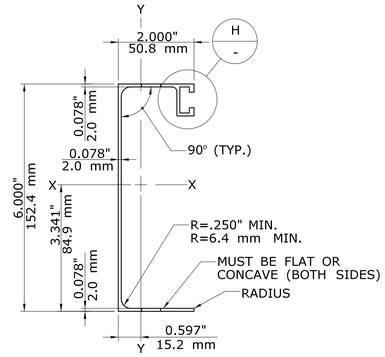

6" (150 mm) EXTRUDED PANEL (F / -)
SCALE: 6" = 1-0'

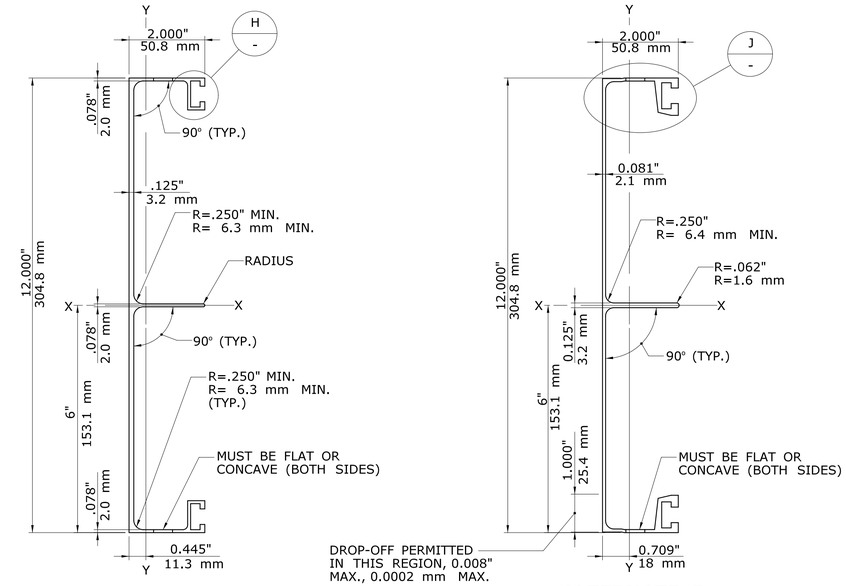

12" (305 mm) EXTRUDED PANEL (G / -)
SCALE: 6" = 1-0'

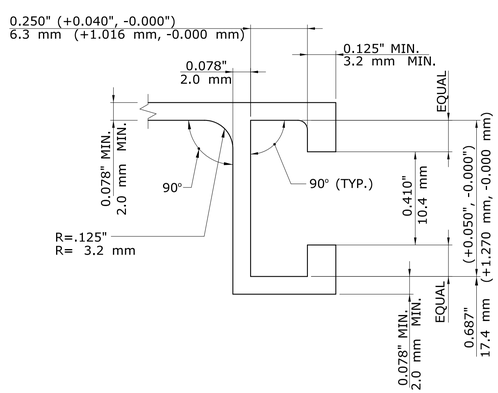

DETAIL (H / -)
SCALE: 3 X FULL SCALE

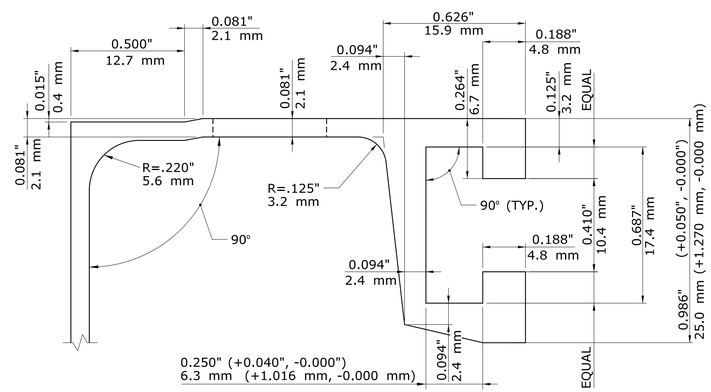

DETAIL (J / -)
SCALE: 3 X FULL SCALE

NOTES:

THE EXTRUDED PANELS SHALL CONFORM TO THE REQUIREMENTS OF ASTM B221, ALLOY 6063-T6 AND THE FOLLOWING SECTION PROPERTIES:

SECTION	AREA OF SECTION in^2 (mm^2)	WT. / FT. LBS. / FT. (KG / M)	I_{X-X} in^4 (mm^4)	I_{Y-Y} in^4 (mm^4)
6" (150 mm) EXTRUDED PANEL	0.933 (601.93)	1.13 (0.16)	5.023 (2 090 730)	0.473 (196 877)
12" (305 mm) EXTRUDED PANEL ALTERNATE A	2.237 (1443.22)	2.72 (0.38)	36.284 (15 102 541)	0.941 (391 674)
12" (305 mm) EXTRUDED PANEL ALTERNATE B	2.091 (1349.03)	2.54 (0.35)	38.947 (16 210 965)	1.183 (492 402)

NOTES

THE POST CLIP ASSEMBLY SHALL BE COMPOSED OF A POST CLIP AND A BOLT WITH A NUT AND WASHER. THE POST CLIP SHALL CONFORM TO THE REQUIREMENTS OF ASTM B26, ALLOY 356.0-T6. THE POST BOLT SHALL BE A $^3/_8$" DIA. X $1^3/_4$" LONG (9 mm DIA. X 44 mm LONG) RECTANGULAR HEAD BOLT CONFORMING TO ASTM A193, CLASS 1, GRADE B8 (TYPE 304). THE NUT SHALL BE A COMPATIBLE HEX, PREVAILING TORQUE (NYLON INSERT) LOCK NUT CONFORMING TO ASTM A194, CLASS 1, GRADE B8 (TYPE 304). THE WASHER SHALL BE A COMPATIBLE, FLAT, CIRCULAR WASHER CONFORMING TO ASTM A276, TYPE 304, ANNEALED. THE DIMENSIONS OF THE RECTANGULAR BOLT HEAD SHALL BE SUCH THAT IT WILL FIT INTO THE EXTRUDED PANEL SLOT AND WILL NOT ROTATE WHILE THE NUT IS BEING TURNED.

REV.	DATE	REVISION DESCRIPTION	SHEET NO.

THE INFORMATION, INCLUDING ESTIMATED QUANTITIES OF WORK, SHOWN ON THESE SHEETS IS BASED ON LIMITED INVESTIGATIONS BY THE STATE AND IS IN NO WAY WARRANTED TO INDICATE THE CONDITIONS OF ACTUAL QUANTITIES OF WORK WHICH WILL BE REQUIRED.

Plotted Date: 6/16/2015

DESIGNER/DRAFTER: RDD
CHECKED BY: JK
SCALE AS NOTED

STATE OF CONNECTICUT
DEPARTMENT OF TRANSPORTATION

Filename: ...\SB..3..0170..3303..ExtrudedAlSignPanel..ManufacturingDetails.dgn

SIGNATURE/ BLOCK:
OFFICE OF ENGINEERING
APPROVED BY:

PROJECT TITLE:
REPLACEMENT OF OVERHEAD SIGN SUPPORTS ON VARIOUS ROUTES STATEWIDE

TOWN: VARIOUS

DRAWING TITLE: EXTRUDED ALUMINUM SIGN PANEL MANUFACTURING DETAILS

PROJECT NO. 170-3303
DRAWING NO. S-3
SHEET NO. 09.03