06 - SIGN SUPPORT REPAIRS

INDEX OF DRAWINGS

DRAWING NUMBER	DRAWING TITLE	DRAWING NUMBER	DRAWING TITLE
S-1	INDEX OF DRAWINGS		
S-2	SIGN SUPPORT REPAIRS SITE NO. 2		
S-3	SIGN SUPPORT REPAIRS SITE NO. 5B		
S-4	MISCELLANEOUS DETAILS SITE NO. 2		
S-5	MISCELLANEOUS DETAILS SITE NO. 5B		

THE DESIGN APPEARS TO CONFORM TO APPLICABLE CRITERIA. APPROVAL IS NOT TO BE CONSTRUED TO MEAN THAT ALL ASPECTS OF THE DESIGN HAVE BEEN PERSONALLY CHECKED BY THE UNDERSIGNED.

Rabih M. Barakat P.E.

Digitally signed by Rabih M. Barakat P.E.
DN: CN=Rabih M. Barakat P.E., O=State of Connecticut, E=rabih.barakat@ct.gov, OU=Department of Transportation, OU=Transportation Principal Engineer of Bridge Design, OU=Division of Bridges and Facilities, L=Newington, S=Connecticut, C=US
Date: 2015.06.17 11:46:43-04'00'

TRANSPORTATION PRINCIPAL ENGINEER

REV.	DATE	REVISION DESCRIPTION	SHEET NO.

THE INFORMATION, INCLUDING ESTIMATED QUANTITIES OF WORK, SHOWN ON THESE SHEETS IS BASED ON LIMITED INVESTIGATIONS BY THE STATE AND IS IN NO WAY WARRANTED TO INDICATE THE CONDITIONS OF ACTUAL QUANTITIES OF WORK WHICH WILL BE REQUIRED.

Plotted Date: 6/16/2015

DESIGNER/DRAFTER: BU

CHECKED BY: RDD

SCALE AS NOTED

STATE OF CONNECTICUT
DEPARTMENT OF TRANSPORTATION

Filename: ..\SB_1_Index Sheet.dgn

SIGNATURE/ BLOCK:

OFFICE OF ENGINEERING

APPROVED BY:

PROJECT TITLE:

REPLACEMENT OF OVERHEAD SIGN SUPPORTS ON VARIOUS ROUTES STATEWIDE

TOWN: CHESHIRE AND NEW BRITAIN

DRAWING TITLE: INDEX SHEET

PROJECT NO. 170-3303

DRAWING NO. S-1

SHEET NO. 06.01

Connecticut Department of Transportation
QA/QC Format Check

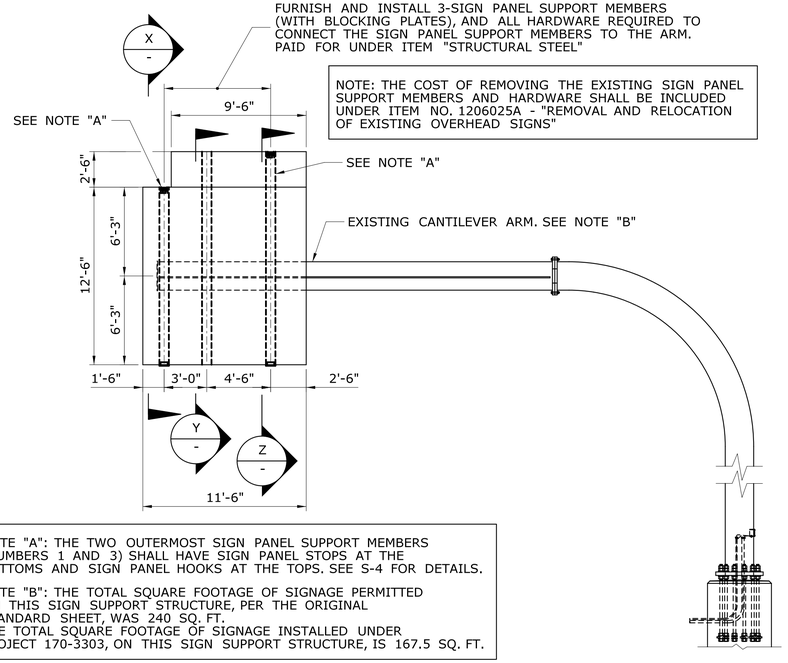

NOTE: THE COST OF REMOVING THE EXISTING SIGN PANEL SUPPORT MEMBERS AND HARDWARE SHALL BE INCLUDED UNDER ITEM NO. 1206025A - "REMOVAL AND RELOCATION OF EXISTING OVERHEAD SIGNS"

NOTE "A": THE TWO OUTERMOST SIGN PANEL SUPPORT MEMBERS (NUMBERS 1 AND 3) SHALL HAVE SIGN PANEL STOPS AT THE BOTTOMS AND SIGN PANEL HOOKS AT THE TOPS. SEE S-4 FOR DETAILS.

NOTE "B": THE TOTAL SQUARE FOOTAGE OF SIGNAGE PERMITTED ON THIS SIGN SUPPORT STRUCTURE, PER THE ORIGINAL STANDARD SHEET, WAS 240 SQ. FT.
THE TOTAL SQUARE FOOTAGE OF SIGNAGE INSTALLED UNDER PROJECT 170-3303, ON THIS SIGN SUPPORT STRUCTURE, IS 167.5 SQ. FT.

ELEVATION VIEW OF SITE 2 SIGN SUPPORT (21922) (COMPLETED CONDITION)
SCALE: $\frac{3}{16}$" = 1'-0"

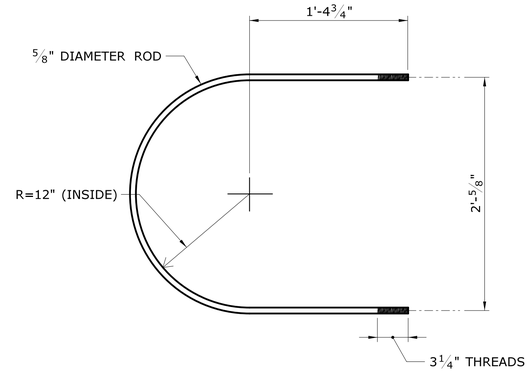

DETAIL: GALVANIZED U-BOLT
SCALE: 1½" = 1'-0"

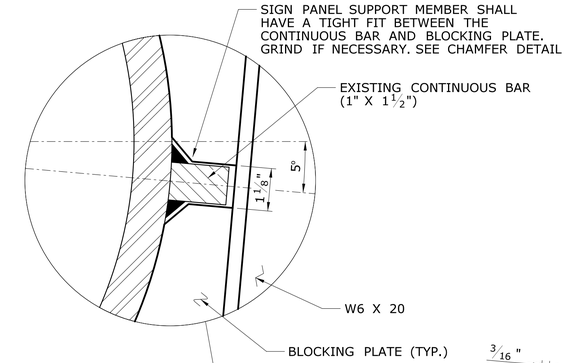

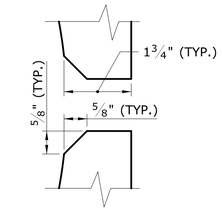

CHAMFER DETAIL
SCALE: 6" = 1'-0"

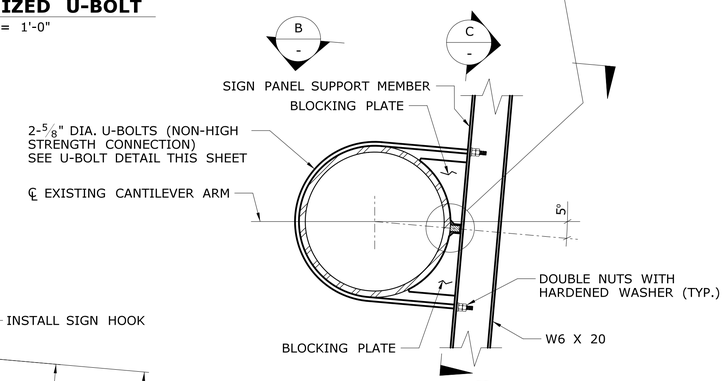

DETAIL A
SCALE: 1" = 1'-0"

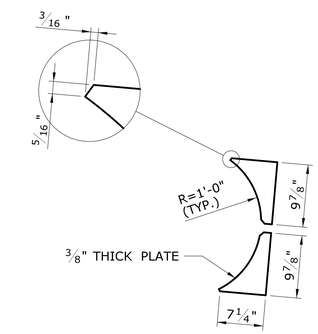

BLOCKING PLATE DETAIL
SCALE: 1" = 1'-0"

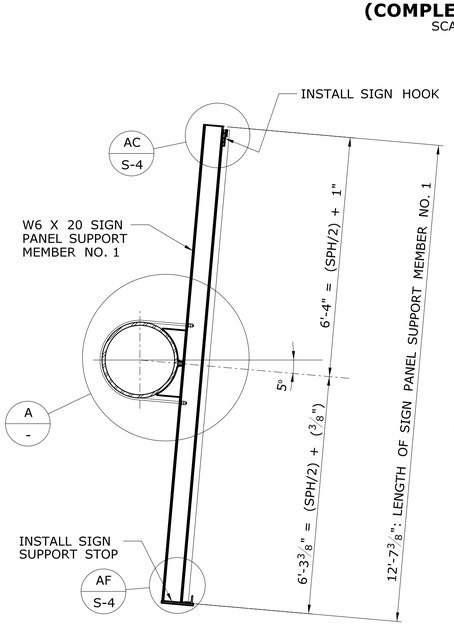

SECTION X
SCALE: ½" = 1'-0"

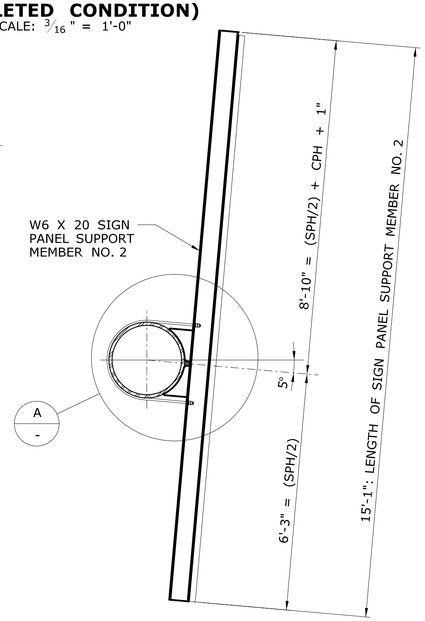

SECTION Y
SCALE: ½" = 1'-0"

SPH=SIGN PANEL HEIGHT
CPH=CROWN PANEL HEIGHT

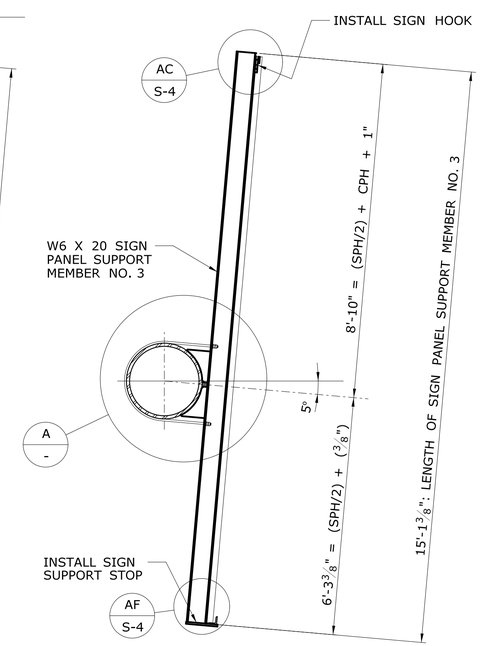

SECTION Z
SCALE: ½" = 1'-0"

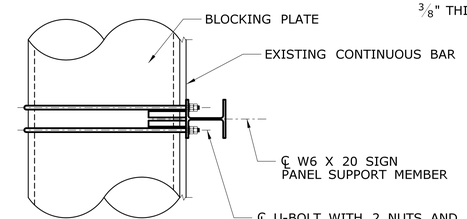

VIEW B
SCALE: 1" = 1'-0"

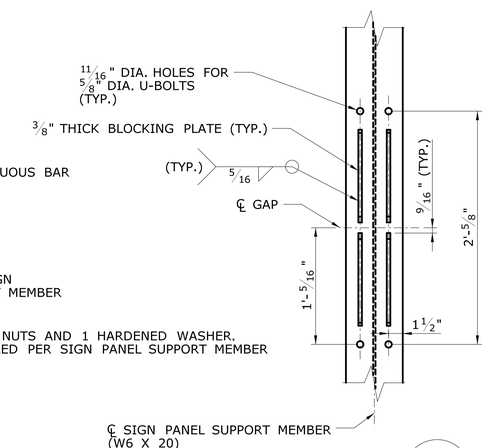

VIEW C
SCALE: 1½" = 1'-0"

REV.	DATE	REVISION DESCRIPTION	SHEET NO.

THE INFORMATION, INCLUDING ESTIMATED QUANTITIES OF WORK, SHOWN ON THESE SHEETS IS BASED ON LIMITED INVESTIGATIONS BY THE STATE AND IS IN NO WAY WARRANTED TO INDICATE THE CONDITIONS OF ACTUAL QUANTITIES OF WORK WHICH WILL BE REQUIRED.

Plotted Date: 6/16/2015

DESIGNER/DRAFTER: RDD
CHECKED BY: JK
SCALE AS NOTED

STATE OF CONNECTICUT
DEPARTMENT OF TRANSPORTATION

Filename: ...\SB..2..0170..3303..Site 2 Repairs Cheshire.dgn

SIGNATURE/BLOCK: OFFICE OF ENGINEERING
APPROVED BY:

PROJECT TITLE: REPLACEMENT OF OVERHEAD SIGN SUPPORTS ON VARIOUS ROUTES STATEWIDE

TOWN: CHESHIRE

DRAWING TITLE: SIGN SUPPORT REPAIRS SITE NO. 2

PROJECT NO. 170-3303
DRAWING NO. S-2
SHEET NO. 06.02

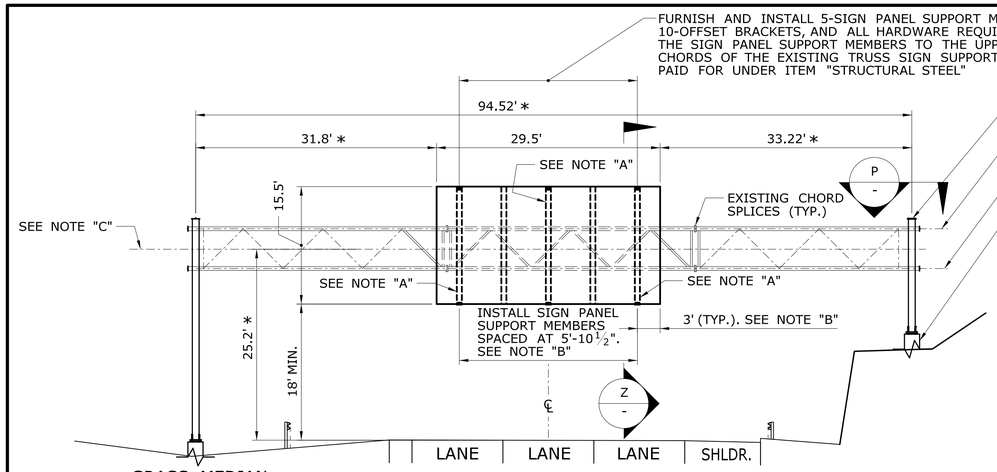

NOTE: THE COST OF REMOVING THE EXISTING SIGN PANEL SUPPORT MEMBERS AND HARDWARE SHALL BE INCLUDED UNDER ITEM NO. 1206025A - "REMOVAL AND RELOCATION OF EXISTING OVERHEAD SIGNS"

CROSS SECTION - SITE 5B

SCALE: 1"=10'

∗DIMENSIONS SHOWN ARE APPROXIMATE - FOR ILLUSTRATION ONLY. CONTRACTOR TO DETERMINE ACTUAL DIMENSIONS BASED ON FIELD SURVEY.

NOTE "A": THE OUTERMOST SIGN PANEL SUPPORT MEMBERS AND THE MIDDLE SIGN PANEL SUPPORT MEMBER SHALL HAVE SIGN PANEL STOPS AT THE BOTTOMS AND SIGN PANEL HOOKS AT THE TOPS. SEE S-5 FOR DETAILS.

NOTE "B": IT IS RECOGNIZED THAT THE SPACING AND OVERHANG OF THE NEW SIGN PANEL SUPPORT MEMBERS ON THIS SHEET EXCEED THE MAXIMUM ALLOWABLE SPACINGS INDICATED ON THE VARIOUS SHEETS FOR THE DESIGN BUILD SIGN SUPPORT STRUCTURES.

NOTE "C": THE TOTAL SQUARE FOOTAGE OF EXISTING SIGNAGE ON THIS SIGN SUPPORT STRUCTURE IS APPROXIMATELY 495 SQ. FT. THE TOTAL SQUARE FOOTAGE OF SIGNAGE INSTALLED UNDER PROJECT 170-3303, ON THIS SIGN SUPPORT STRUCTURE, IS 457 SQ. FT.

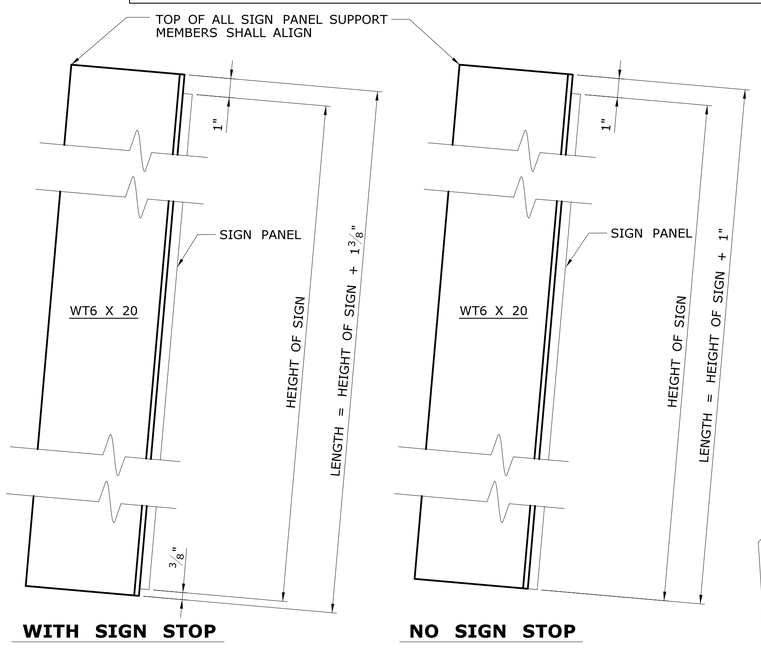

WITH SIGN STOP **NO SIGN STOP**

LENGTH OF SIGN PANEL SUPPORT MEMBERS

NTS

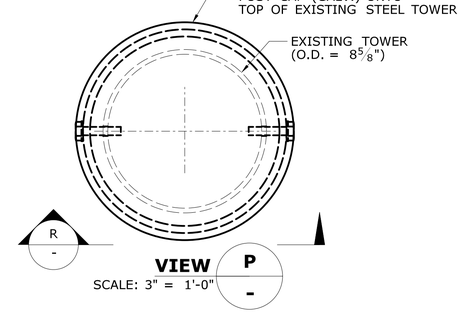

VIEW P

SCALE: 3" = 1'-0"

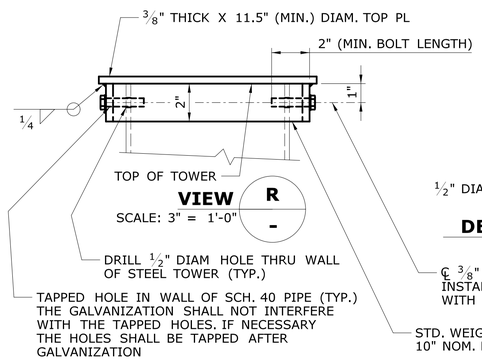

VIEW R

SCALE: 3" = 1'-0"

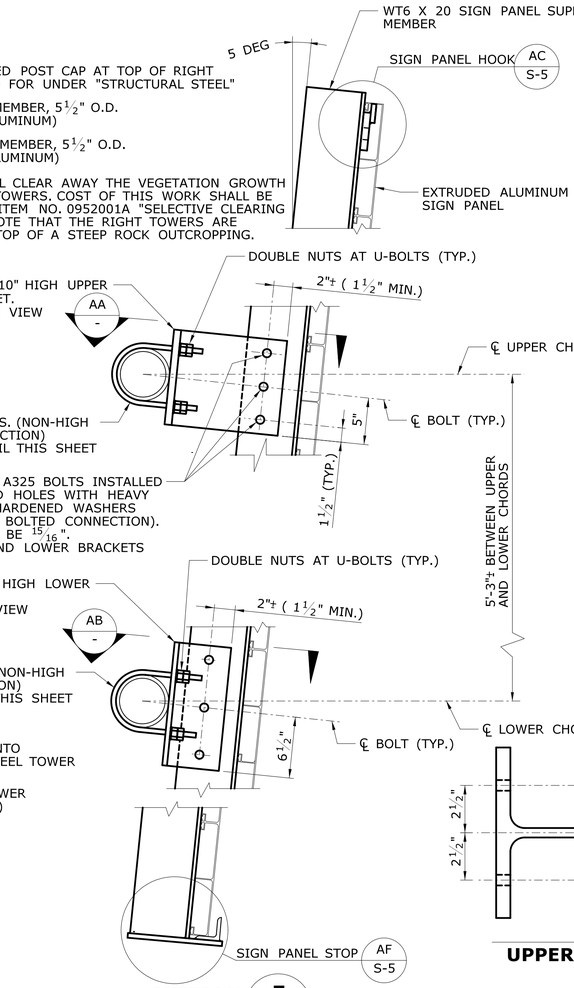

SECTION Z

SCALE: 1½" = 1'-0"

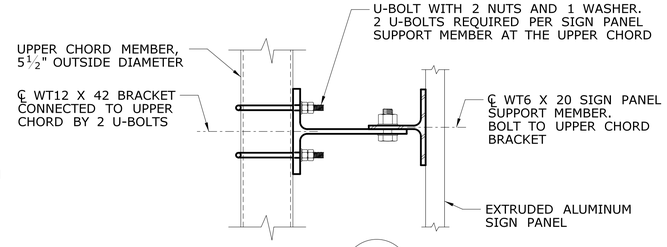

SECTION AA

SCALE: 1½" = 1'-0"

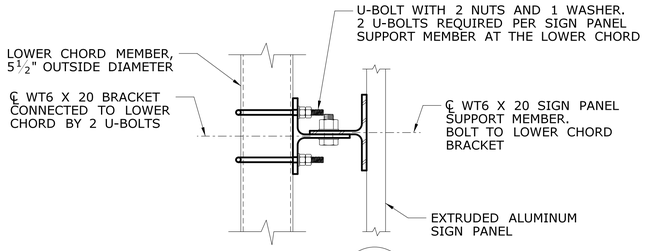

SECTION AB

SCALE: 1½" = 1'-0"

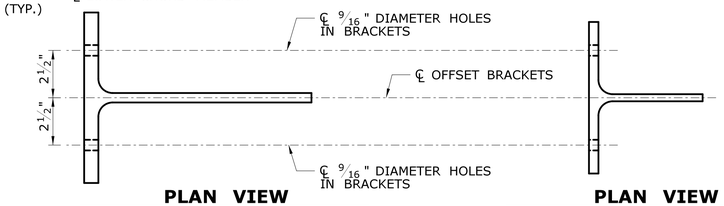

PLAN VIEW

UPPER OFFSET BRACKET

SCALE: 3" = 1'-0"

PLAN VIEW

LOWER OFFSET BRACKET

SCALE: 3" = 1'-0"

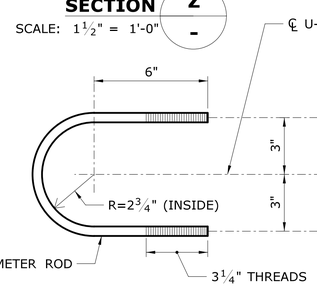

DETAIL: GALVANIZED U-BOLT

SCALE: 3" = 1'-0"

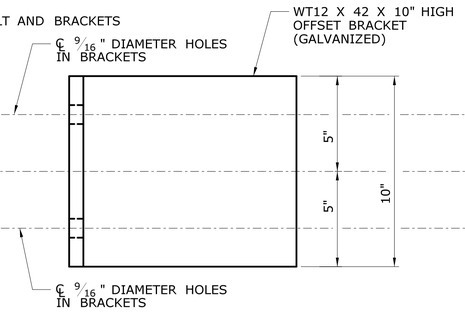

ELEVATION VIEW

UPPER OFFSET BRACKET

SCALE: 3" = 1'-0"

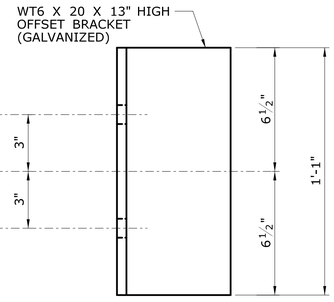

ELEVATION VIEW

LOWER OFFSET BRACKET

SCALE: 3" = 1'-0"

REV.	DATE	REVISION DESCRIPTION	SHEET NO.

THE INFORMATION, INCLUDING ESTIMATED QUANTITIES OF WORK, SHOWN ON THESE SHEETS IS BASED ON LIMITED INVESTIGATIONS BY THE STATE AND IS IN NO WAY WARRANTED TO INDICATE THE CONDITIONS OF ACTUAL QUANTITIES OF WORK WHICH WILL BE REQUIRED.

Plotted Date: 6/16/2015

DESIGNER/DRAFTER: RDD

CHECKED BY: JK

SCALE AS NOTED

STATE OF CONNECTICUT
DEPARTMENT OF TRANSPORTATION

Filename: ...\SB_3_0170_3303_Site 5B Repairs New Britain.dgn

SIGNATURE/BLOCK: OFFICE OF ENGINEERING

APPROVED BY:

PROJECT TITLE: REPLACEMENT OF OVERHEAD SIGN SUPPORTS ON VARIOUS ROUTES STATEWIDE

TOWN: NEW BRITAIN

DRAWING TITLE: SIGN SUPPORT REPAIRS SITE NO. 5B

PROJECT NO. 170-3303

DRAWING NO. S-3

SHEET NO. 06.03

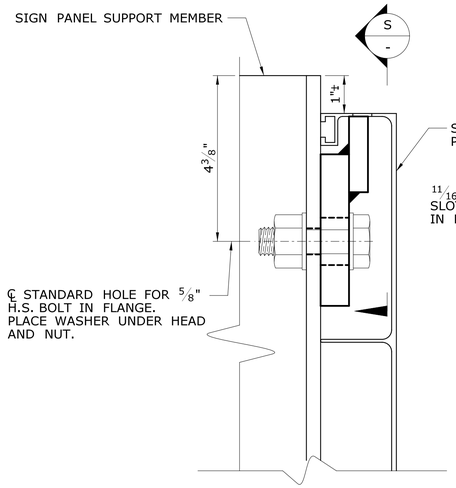

DETAIL AC / -
SCALE: 6" = 1'-0"

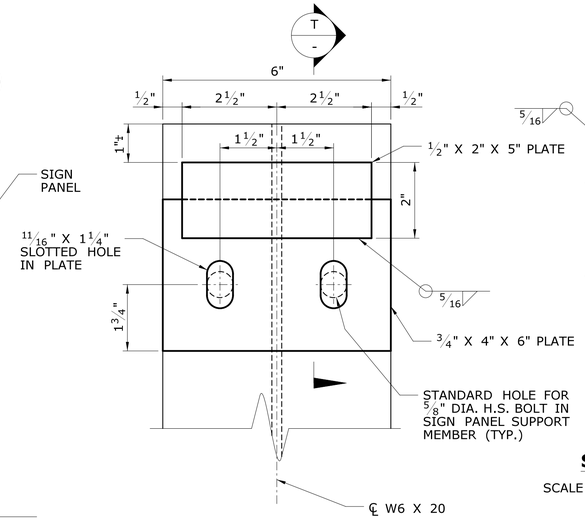

SECTION S / -
SCALE: 6" = 1'-0"

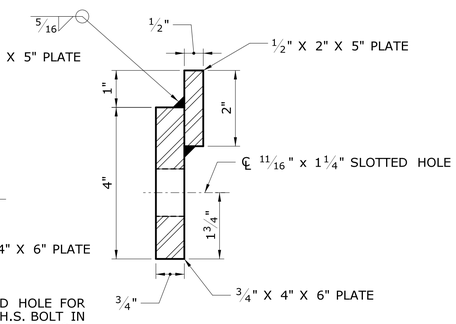

SECTION T / -
SCALE: 6" = 1'-0"

TYPICAL SIGN PANEL HOOK
SITE NO. 2

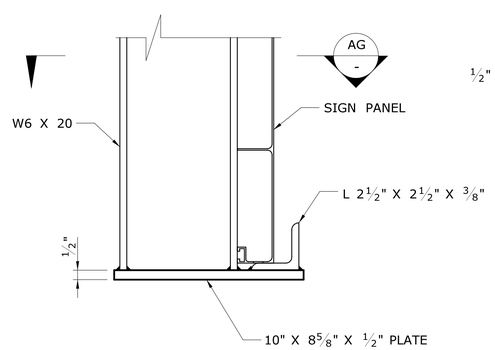

DETAIL AF / -
SCALE: 3" = 1'-0"

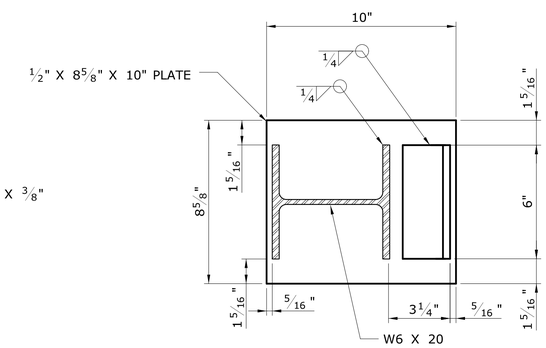

SECTION AG / -
SCALE: 3" = 1'-0"

TYPICAL SIGN STOP
SITE NO. 2

REV.	DATE	REVISION DESCRIPTION	SHEET NO.

THE INFORMATION, INCLUDING ESTIMATED QUANTITIES OF WORK, SHOWN ON THESE SHEETS IS BASED ON LIMITED INVESTIGATIONS BY THE STATE AND IS IN NO WAY WARRANTED TO INDICATE THE CONDITIONS OF ACTUAL QUANTITIES OF WORK WHICH WILL BE REQUIRED.

Plotted Date: 6/16/2015

DESIGNER/DRAFTER: RDD
CHECKED BY: JK
SCALE AS NOTED

STATE OF CONNECTICUT
DEPARTMENT OF TRANSPORTATION

Filename: ...\SB_4_0170_3303_Sites 2 and 5B_VAMS.dgn

SIGNATURE/BLOCK: OFFICE OF ENGINEERING
APPROVED BY:

PROJECT TITLE: REPLACEMENT OF OVERHEAD SIGN SUPPORTS ON VARIOUS ROUTES STATEWIDE

TOWN: CHESHIRE AND NEW BRITAIN

DRAWING TITLE: MISCELLANEOUS DETAILS SITE NO. 2

PROJECT NO. 170-3303
DRAWING NO. S-4
SHEET NO. 06.04

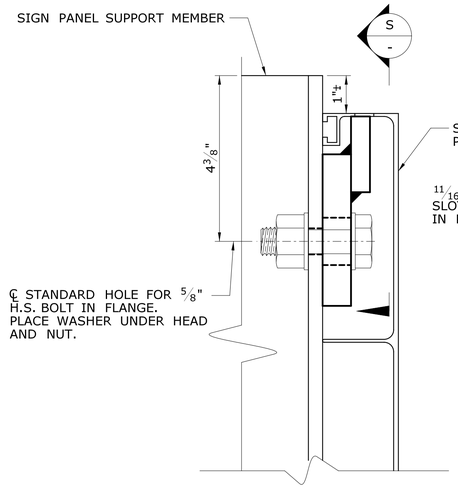

DETAIL AC / -
SCALE: 6" = 1'-0"

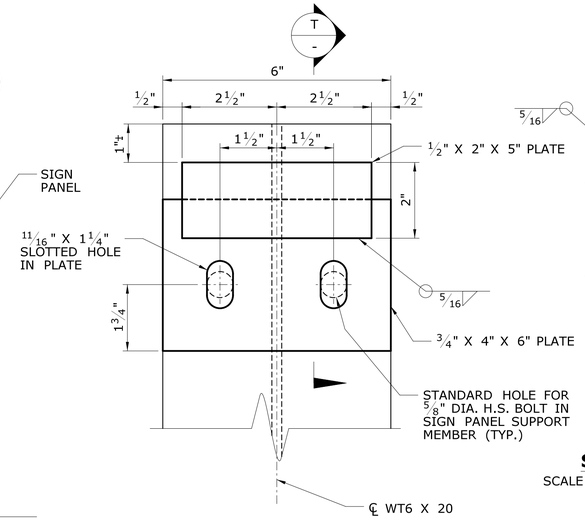

SECTION S / -
SCALE: 6" = 1'-0"

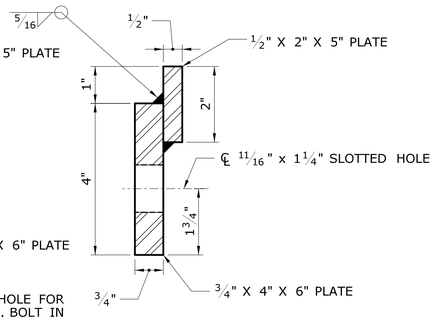

SECTION T / -
SCALE: 6" = 1'-0"

TYPICAL SIGN PANEL HOOK
SITE NO. 5B

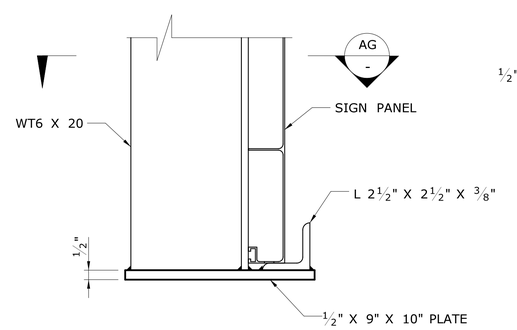

DETAIL AF / -
SCALE: 3" = 1'-0"

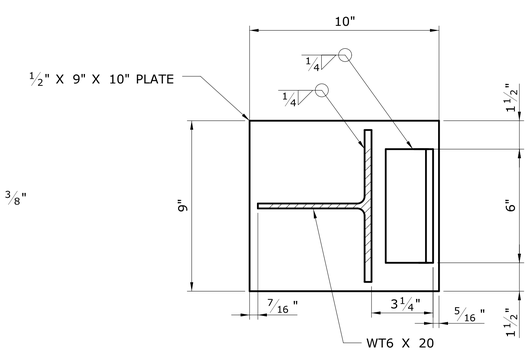

SECTION AG / -
SCALE: 3" = 1'-0"

TYPICAL SIGN STOP
SITE NO. 5B

REV.	DATE	REVISION DESCRIPTION	SHEET NO.

THE INFORMATION, INCLUDING ESTIMATED QUANTITIES OF WORK, SHOWN ON THESE SHEETS IS BASED ON LIMITED INVESTIGATIONS BY THE STATE AND IS IN NO WAY WARRANTED TO INDICATE THE CONDITIONS OF ACTUAL QUANTITIES OF WORK WHICH WILL BE REQUIRED.

Plotted Date: 6/16/2015

DESIGNER/DRAFTER: RDD
CHECKED BY: JK
SCALE AS NOTED

STATE OF CONNECTICUT
DEPARTMENT OF TRANSPORTATION

Filename: ...\SB_5_0170_3303_Site 5B VAMS.dgn

SIGNATURE/BLOCK: OFFICE OF ENGINEERING
APPROVED BY:

PROJECT TITLE: REPLACEMENT OF OVERHEAD SIGN SUPPORTS ON VARIOUS ROUTES STATEWIDE

TOWN: CHESHIRE AND NEW BRITAIN

DRAWING TITLE: MISCELLANEOUS DETAILS SITE NO. 5B

PROJECT NO. 170-3303
DRAWING NO. S-5
SHEET NO. 06.05