05 - STRUCTURE MOUNTED SIGN SUPPORT

INDEX OF DRAWINGS

DRAWING NUMBER	DRAWING TITLE	DRAWING NUMBER	DRAWING TITLE
S-1	INDEX OF DRAWINGS		
S-2	GENERAL PLAN SIMMONS RD. OVER I-84		
S-3	PLAN VIEWS: STRUCTURE MOUNTED SIGN SUPPORT		
S-4	PARAPET RECONSTRUCTION - 1		
S-5	PARAPET RECONSTRUCTION - 2		
S-6	CROSS SECTIONS		
S-7	UPPER AND LOWER SUPPORT MEMBERS		
S-8	SIGN UNIT DETAILS - 1		
S-9	SIGN UNIT DETAILS - 2		
S-10	UPPER BRACE		
S-11	LOWER BRACES		
S-12	MISCELLANEOUS DETAILS - 1		
S-13	MISCELLANEOUS DETAILS - 2		
S-14	BOLTED PLATE DETAILS		
S-15	SIGN PANEL SUPPORT MEMBERS		
S-16	DEFECTIVE WELDS REPAIR		

THE DESIGN APPEARS TO CONFORM TO APPLICABLE CRITERIA. APPROVAL IS NOT TO BE CONSTRUED TO MEAN THAT ALL ASPECTS OF THE DESIGN HAVE BEEN PERSONALLY CHECKED BY THE UNDERSIGNED.

Rabih M. Barakat P.E.

Digitally signed by Rabih M. Barakat P.E.
DN: CN=Rabih M. Barakat P.E., O=State of Connecticut, E=rabih.barakat@ct.gov, OU=Department of Transportation, OU=Transportation Principal Engineer of Bridge Design, OU=Division of Bridges and Facilities, L=Newington, S=Connecticut, C=US
Date: 2015.06.17 11:44:32-04'00'

TRANSPORTATION PRINCIPAL ENGINEER

REV.	DATE	REVISION DESCRIPTION	SHEET NO.

THE INFORMATION, INCLUDING ESTIMATED QUANTITIES OF WORK, SHOWN ON THESE SHEETS IS BASED ON LIMITED INVESTIGATIONS BY THE STATE AND IS IN NO WAY WARRANTED TO INDICATE THE CONDITIONS OF ACTUAL QUANTITIES OF WORK WHICH WILL BE REQUIRED.

Plotted Date: 6/16/2015

DESIGNER/DRAFTER: BU

CHECKED BY: RDD

SCALE AS NOTED

STATE OF CONNECTICUT
DEPARTMENT OF TRANSPORTATION

Filename: ..\SB..1..Index Sheet.dgn

SIGNATURE/ BLOCK:

OFFICE OF ENGINEERING

APPROVED BY:

PROJECT TITLE:

REPLACEMENT OF OVERHEAD SIGN SUPPORTS ON VARIOUS ROUTES STATEWIDE

TOWN: EAST HARTFORD

DRAWING TITLE: INDEX SHEET

PROJECT NO. 170-3303

DRAWING NO. S-1

SHEET NO. 05.01

Connecticut Department of Transportation
QA/QC Format Check

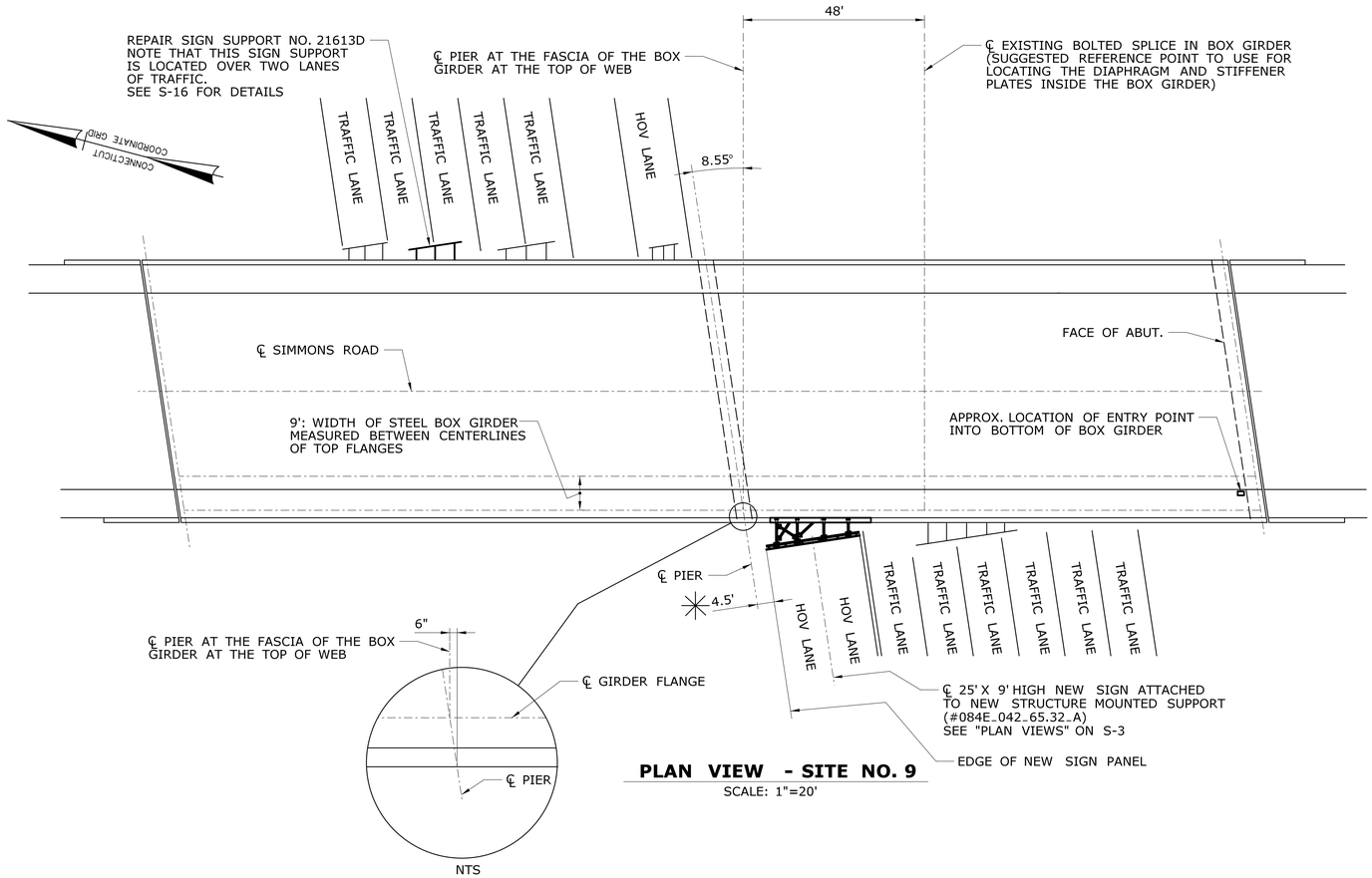

PLAN VIEW - SITE NO. 9

SCALE: 1"=20'

NTS

✳ ALTHOUGH THE STATE HAS ATTEMPTED TO DRAW THE NEW STRUCTURE MOUNTED SIGN STRUCTURE IN ITS CORRECT LOCATION RELATIVE TO THE PARAPET AND THE STEEL BOX GIRDER, THE INDICATED DIMENSION OF 4.5' IS STILL REQUIRED TO BE HELD BY THE CONTRACTOR FOR LAYOUT OF THE NEW SIGN SUPPORT. IF NECESSARY, A PORTION OF EXISTING PARAPET FENCING, ABOVE THE PIER, MAY BE TEMPORARILY REMOVED TO LOCATE THE CENTERLINE OF THE PIER PROVIDED TEMPORARY FENCING IS UTILIZED TO ENSURE A SAFE CONDITION.

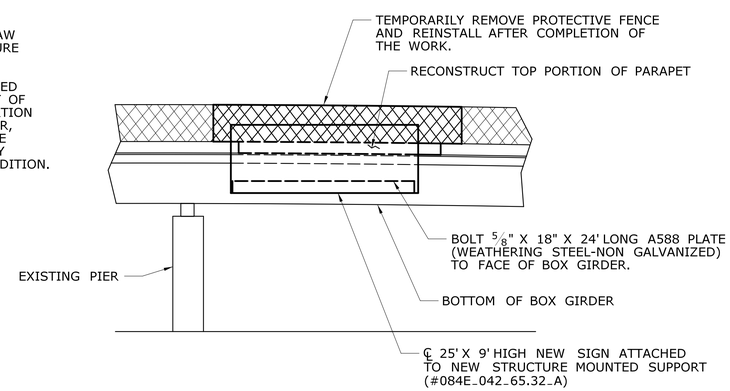

PARTIAL ELEVATION VIEW - SITE NO. 9

SCALE: 1"=10'

GENERAL NOTES

SPECIFICATIONS: CONNECTICUT DEPARTMENT OF TRANSPORTATION FORM 816 DATED 2004, SUPPLEMENTAL SPECIFICATIONS THERETO DATED JANUARY 2015 AND SPECIAL PROVISIONS.

DESIGN SPECIFICATIONS: AASHTO STANDARD SPECIFICATIONS FOR STRUCTURAL SUPPORTS FOR HIGHWAY SIGNS, LUMINARIES AND TRAFFIC SIGNALS - 2009, WITH THE LATEST INTERIM SPECIFICATIONS, AS SUPPLEMENTED BY THE CONNECTICUT DEPARTMENT OF TRANSPORTATION BRIDGE DESIGN MANUAL-2003.

DESIGN STRENGTHS: CLASS "F" CONCRETE-BASED ON Fc' = 4,000 PSI
REINFORCEMENT - ASTM A615: BASED ON FY = 60,000 PSI

THE SPECIFIED CONCRETE STRENGTH USED IN DESIGN, Fc', OF THE CONCRETE COMPONENTS IS NOTED ABOVE. THE MINIMUM COMPRESSIVE STRENGTH OF THE CONCRETE IN THE CONSTRUCTED COMPONENTS SHALL CONFORM TO THE REQUIREMENTS OF 'SECTION 6.01 CONCRETE FOR STRUCTURES'.

DIMENSIONS: WHEN DECIMAL DIMENSIONS ARE GIVEN TO LESS THAN THREE DECIMAL PLACES, THE OMITTED DIGITS SHALL BE ASSUMED TO BE ZEROS.

CLASS "F" CONCRETE: CLASS "F" CONCRETE SHALL BE USED FOR THE PARAPET RECONSTRUCTION.

PARAFFIN: THE COST OF FURNISHING AND APPLYING PARAFFIN TO THE PARAPET JOINTS SHALL BE INCLUDED IN ITEM CLASS "F" CONCRETE.

JOINT SEAL: THE COST OF FURNISHING AND INSTALLING JOINT SEAL SHALL BE INCLUDED IN ITEM CLASS "F" CONCRETE

CONSTRUCTION JOINTS: CONSTRUCTION JOINTS OTHER THAN THOSE SHOWN ON THE PLANS WILL NOT BE PERMITTED WITHOUT PRIOR APPROVAL OF THE ENGINEER.

EXPOSED EDGES: EXPOSED EDGES OF CONCRETE SHALL BE BEVELED 1" X 1" UNLESS DIMENSIONED OTHERWISE.

CONCRETE COVER: ALL REINFORCEMENT SHALL HAVE TWO INCHES MINIMUM COVER.

REINFORCEMENT: ALL REINFORCEMENT SHALL CONFORM TO ASTM A615 GRADE 60 AND SHALL BE HOT DIP GALVANIZED IN ACCORDANCE WITH THE STANDARD SPECIFICATIONS.

EXISTING DIMENSIONS: ALL DIMENSIONS OF THE EXISTING STRUCTURES SHOWN ON THESE PLANS ARE FOR GENERAL REFERENCE ONLY. THEY HAVE BEEN TAKEN FROM THE ORIGINAL DESIGN DRAWINGS AND ARE NOT GUARANTEED. THE CONTRACTOR SHALL TAKE ALL FIELD MEASUREMENTS NECESSARY TO ASSURE THE PROPER FIT OF THE FINISHED WORK AND SHALL ASSUME FULL RESPONSIBILITY FOR THEIR ACCURACY. WHEN SHOP DRAWINGS BASED ON FIELD MEASUREMENTS ARE SUBMITTED FOR APPROVAL, THE FIELD MEASUREMENTS SHALL ALSO BE SUBMITTED FOR REFERENCE BY THE REVIEWER.

REMOVAL OF EXISTING BRIDGE MOUNTED SIGN SUPPORT STRUCTURE: THE EXISTING BRIDGE MOUNTED SIGN SUPPORT, CONSISTING OF WELDED ANGLES, AND CONNECTED TO THE EXISTING CONCRETE PARAPET AND THE FASCIA BOX GIRDER, SHALL BE REMOVED. THE COST OF REMOVING THIS STRUCTURE SHALL BE INCLUDED IN ITEM NO. 1206025A - "REMOVAL AND RELOCATION OF EXISTING OVERHEAD SIGNS"

REV.	DATE	REVISION DESCRIPTION	SHEET NO.

THE INFORMATION, INCLUDING ESTIMATED QUANTITIES OF WORK, SHOWN ON THESE SHEETS IS BASED ON LIMITED INVESTIGATIONS BY THE STATE AND IS IN NO WAY WARRANTED TO INDICATE THE CONDITIONS OF ACTUAL QUANTITIES OF WORK WHICH WILL BE REQUIRED.

Plotted Date: 6/16/2015

DESIGNER/DRAFTER: RDD
CHECKED BY: JJK
SCALE AS NOTED

STATE OF CONNECTICUT
DEPARTMENT OF TRANSPORTATION

Filename: ...\General Plan 1.dgn

SIGNATURE/BLOCK: OFFICE OF ENGINEERING
APPROVED BY:

PROJECT TITLE: REPLACEMENT OF OVERHEAD SIGN SUPPORTS ON VARIOUS ROUTES STATEWIDE

TOWN: EAST HARTFORD

DRAWING TITLE: GENERAL PLAN SIMMONS RD. OVER I-84

PROJECT NO. 170-3303
DRAWING NO. S-2
SHEET NO. 05.02

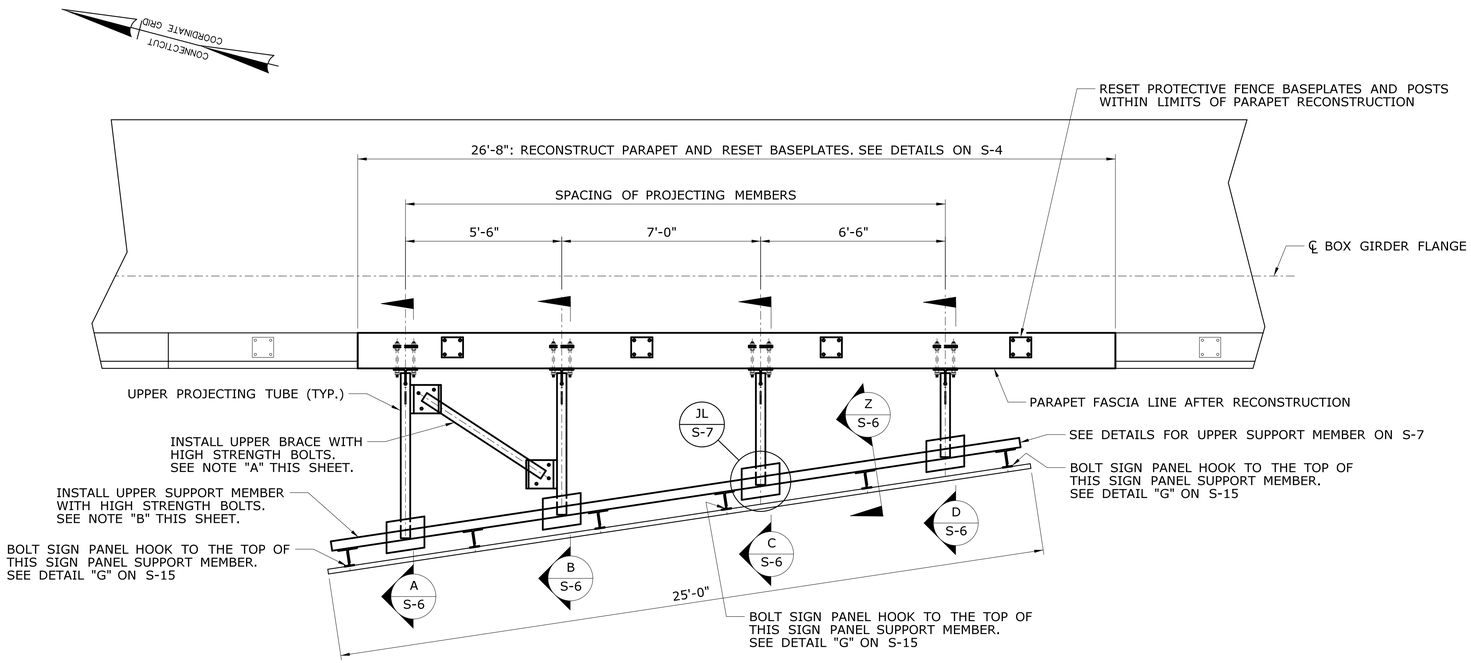

PLAN VIEW-UPPER MEMBERS

SCALE: $^{3}/_{8}$"=1'-0"

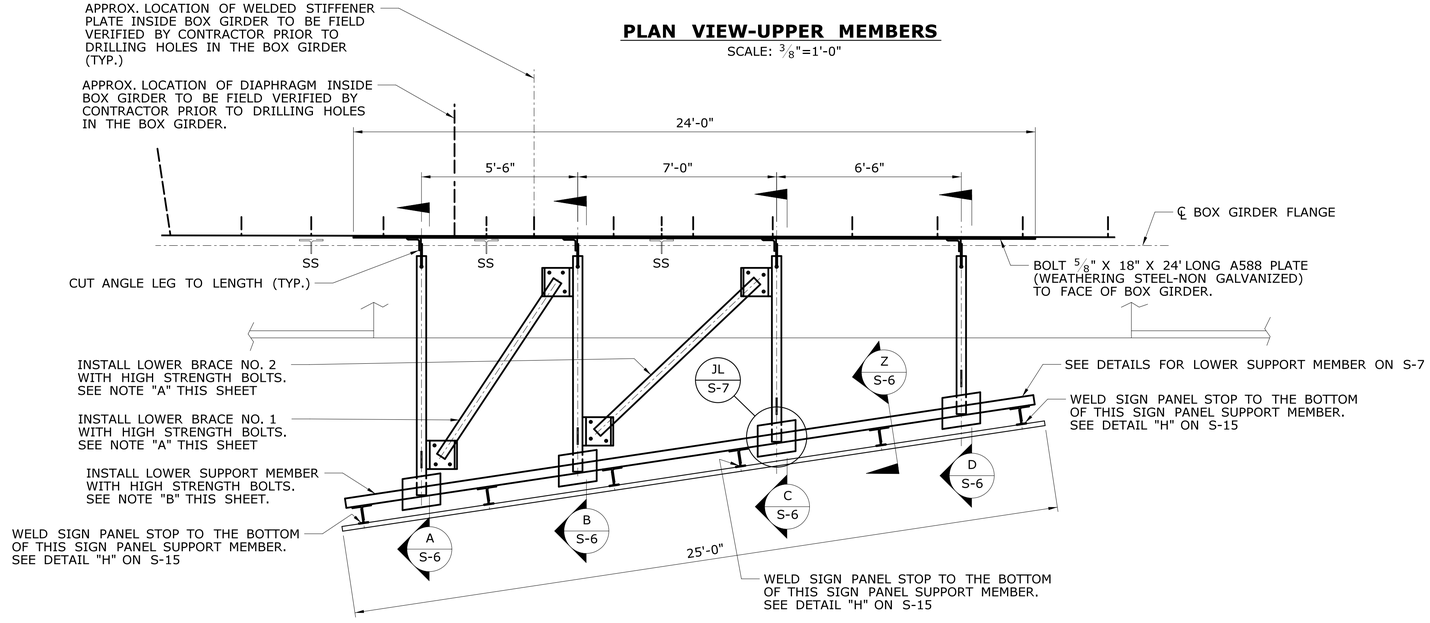

SS: DESIGNATES APPROX. LOCATION OF EXISTING LOWER SIGN SUPPORT STRUTS. THERE ARE FOUR HOLES AT EACH LOWER STRUT, IN THE GIRDER WEB, THAT SHALL BE FILLED WITH HIGH STRENGTH BOLTS, SEE S-14.

PLAN VIEW-LOWER MEMBERS

SCALE: $^{3}/_{8}$"=1'-0"

NOTES - STRUCTURE MOUNTED SIGN SUPPORT

COST OF THE NEW BRIDGE MOUNTED SIGN SUPPORT, EXCLUSIVE OF THE SIGN PANELS, INCLUDING THE COST OF FURNISHING AND INSTALLING THE $^{5}/_{8}$" X 18" X 24' LONG STEEL PLATE TO THE WEB OF THE EXISTING BOX GIRDER WEB, AND ALL REQUIRED ATTACHMENT HARDWARE INCLUDING PLATE WASHERS, SHALL BE PAID FOR UNDER ITEM "STRUCTURE MOUNTED SIGN SUPPORT". THE COST OF FURNISHING AND INSTALLING BOLTING MATERIALS TO FILL THE EXISTING HOLES IN THE FASCIA GIRDER SHALL ALSO BE PAID FOR UNDER ITEM "STRUCTURE MOUNTED SIGN SUPPORT"

THE STEEL USED FOR ROLLED SHAPES AND PLATES SHALL CONFORM TO THE REQUIREMENTS OF ASTM A709, GRADE 50 EXCEPT FOR THE STEEL USED FOR THE $^{5}/_{8}$" X 18" X 24' LONG PLATE AND THE SKEWED ANGLES WELDED THERETO, WHICH SHALL CONFORM TO ASTM A588. STEEL FOR THE TUBULAR ELEMENTS SHALL CONFORM TO ASTM A500, GRADE B (MINIMUM Fy = 46,000 PSI)

ALL STEEL MEMBERS AND COMPONENTS OF THE SIGN SUPPORT STRUCTURE, WITH EXCEPTION OF THE $^{5}/_{8}$" X 18" X 24' LONG PLATE AND THE SKEWED ANGLES WELDED THERETO, SHALL BE HOT-DIP GALVANIZED, AFTER FABRICATION, IN ACCORDANCE WITH ASTM A123. ANY GALVANIZING DAMAGED DURING HANDLING OR INSTALLATION SHALL BE REPAIRED IN ACCORDANCE WITH THE SPECIAL PROVISIONS

ALL WELDING DETAILS, PROCEDURES AND TESTING METHODS SHALL CONFORM TO THE REQUIREMENTS OF THE AWS D1.1 STRUCTURAL WELDING CODE - STEEL. ALL WELDING SHALL BE CONTINUOUS UNLESS NOTED OTHERWISE.

ANCHOR BOLTS SHALL CONFORM TO ASTM A449 AND SHALL BE GALVANIZED IN ACCORDANCE WITH ASTM A153.

ALL HIGH STRENGTH BOLTS SHALL CONFORM TO ASTM A325, TYPE 1. NUTS SHALL CONFORM TO ASTM A563, GRADE DH. CIRCULAR, FLAT, HARDENED STEEL WASHERS SHALL CONFORM TO ASTM F436. THE BOLTS, NUTS AND WASHERS SHALL BE GALVANIZED IN ACCORDANCE WITH ASTM A153 OR ASTM B695, GRADE 50.

ALL BOLT HOLES SHALL BE STANDARD HOLES ($^{1}/_{16}$" LARGER THAN THE BOLT DIAMETER), UNLESS OTHERWISE NOTED. WHERE REQUIRED, HOLES SHALL BE FIELD DRILLED IN ACCORDANCE WITH THE PLANS.

ALL HIGH STRENGTH BOLTS SHALL HAVE HARDENED WASHERS PLACED UNDER ALL ELEMENTS (NUT OR BOLT HEAD) TURNED DURING TENSIONING.

ALL BOLTS SHALL BE LUBRICATED PRIOR TO INSTALLATION TO ENSURE FREE ROTATION OF THE NUT ON THE BOLT THREAD.

THE CONTRACTOR SHALL TAKE THE PROPER PRECAUTIONS TO ENSURE THE STABILITY OF ALL STRUCTURAL ELEMENTS UNTIL THE TOTAL STRUCTURE IS ERECTED.

BOLTING REQUIREMENTS FOR THE STRUCTURE MOUNTED SIGN SUPPORT ARE AS FOLLOWS:

NEW STEEL TO NEW STEEL:

GALVANIZED FAYING SURFACES SHALL BE LIGHTLY SCORED BY WIRE BRUSHING AFTER GALVANIZING AND PRIOR TO ASSEMBLY. AFTER THE HOLES HAVE BEEN FIELD DRILLED, THE FAYING SURFACES SHALL BE SEPARATED AND CLEANED OF ALL DELETERIOUS MATERIALS INCLUDING BUT NOT LIMITED TO, CUTTING OIL. AFTER THE BOLTS HAVE BEEN FULLY TENSIONED, THE FAYING SURFACES SHALL BE IN FIRM CONTACT.

NEW STEEL TO EXISTING WEATHERING STEEL:

ALL PACK OR LAMINAR RUST SHALL BE REMOVED FROM THE EXISTING STEEL SURFACES THAT WILL BE ATTACHED TO THE NEW STRUCTURAL STEEL. BURRS OR OTHER IRREGULARITIES THAT PREVENT SOLID SEATING OF THE FAYING SURFACES SHALL BE REMOVED. AFTER THE HOLES HAVE BEEN FIELD DRILLED, THE FAYING SURFACES SHALL BE SEPARATED AND CLEANED OF ALL DELETERIOUS MATERIALS INCLUDING BUT NOT LIMITED TO, CUTTING OIL. AFTER THE BOLTS HAVE BEEN FULLY TENSIONED, THE FAYING SURFACES SHALL BE IN FIRM CONTACT.

WORK INSIDE THE BOX GIRDER: SEE THE SPECIAL PROVISION ENTITLED "CONFINED SPACE HEALTH AND SAFETY" FOR REQUIREMENTS RELATIVE TO WORKING INSIDE THE STEEL BOX GIRDER.

INSTALLATION NOTES

NOTE A: THE UPPER AND LOWER BRACES SHALL BE INSTALLED AFTER FIELD DRILLING $^{15}/_{16}$" DIAMETER HOLES THROUGH THE PLATES THAT ARE WELDED TO THE SIDES OF THE PROJECTING MEMBERS. THE HOLES IN THE BRACING PLATES SHALL BE USED AS TEMPLATES FOR THESE DRILLING OPERATIONS. THE MINIMUM DISTANCE BETWEEN THE CENTER OF ANY FIELD DRILLED HOLE AND THE EDGE OF ANY PLATE SHALL NOT BE LESS THAN $1^{1}/_{2}$"

NOTE B: THE UPPER AND LOWER SUPPORT MEMBERS SHALL BE INSTALLED AFTER FIELD DRILLING $^{15}/_{16}$" DIAMETER HOLES THROUGH ALL OF THE PLATES. THE MINIMUM DISTANCE BETWEEN THE CENTER OF ANY FIELD DRILLED HOLE AND THE EDGE OF ANY PLATE SHALL NOT BE LESS THAN $1^{1}/_{2}$".

SIZE OF THE HIGH STRENGTH BOLTS FOR THESE INSTALLATIONS SHALL BE $^{7}/_{8}$" DIAMETER AND THE BOLTS SHALL BE GALVANIZED.

REV.	DATE	REVISION DESCRIPTION	SHEET NO.

THE INFORMATION, INCLUDING ESTIMATED QUANTITIES OF WORK, SHOWN ON THESE SHEETS IS BASED ON LIMITED INVESTIGATIONS BY THE STATE AND IS IN NO WAY WARRANTED TO INDICATE THE CONDITIONS OF ACTUAL QUANTITIES OF WORK WHICH WILL BE REQUIRED.

Plotted Date: 6/16/2015

DESIGNER/DRAFTER: RDD
CHECKED BY: JK
SCALE AS NOTED

STATE OF CONNECTICUT
DEPARTMENT OF TRANSPORTATION

Filename: ...\SB_3_Structure Mounted Sign Support - 1.dgn

SIGNATURE/BLOCK: OFFICE OF ENGINEERING
APPROVED BY:

PROJECT TITLE: REPLACEMENT OF OVERHEAD SIGN SUPPORTS ON VARIOUS ROUTES STATEWIDE

TOWN: EAST HARTFORD

DRAWING TITLE: PLAN VIEWS: STRUCTURE MOUNTED SIGN SUPPORT

PROJECT NO. 170-3303
DRAWING NO. S-3
SHEET NO. 05.03

SS: DESIGNATES APPROXIMATE LOCATION OF EXISTING UPPER SIGN SUPPORT STRUTS AND PROJECTING ANCHOR BOLTS

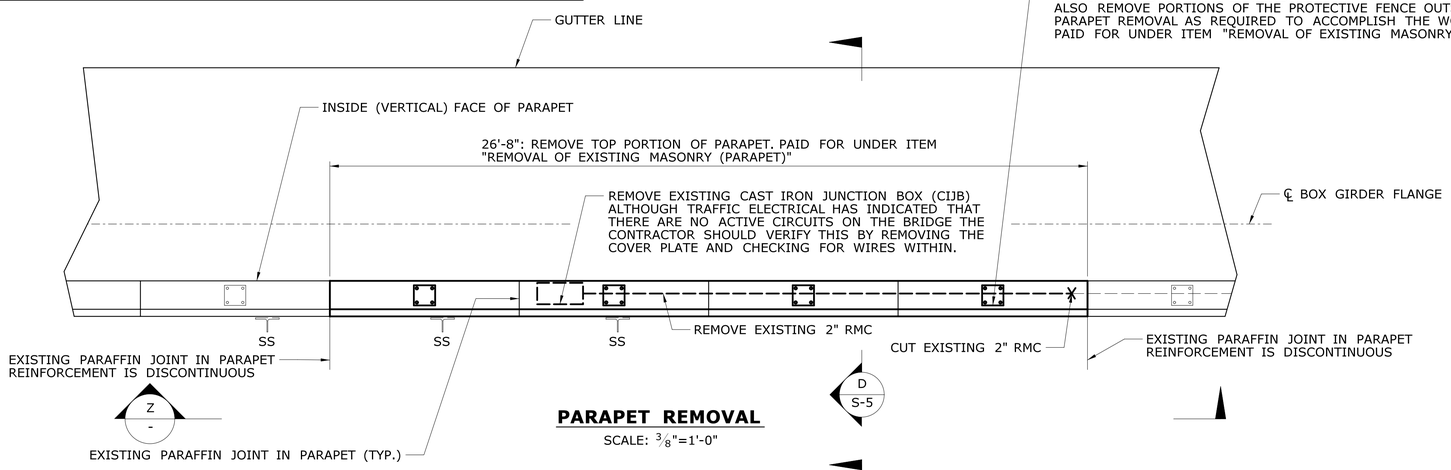

PARAPET REMOVAL

SCALE: 3/8"=1'-0"

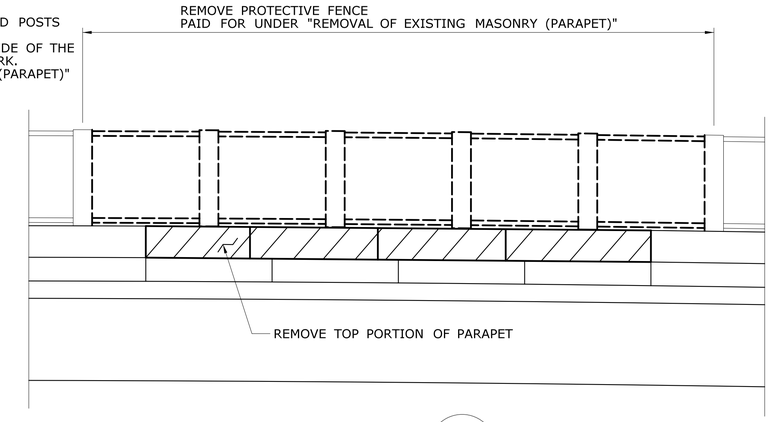

VIEW Z -

SCALE: 1/4" = 1'-0"

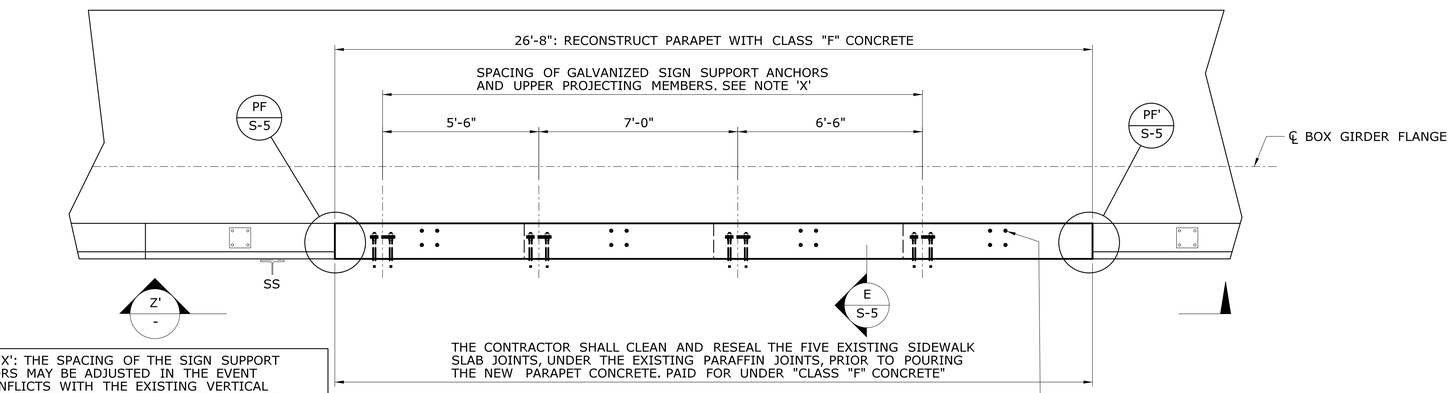

NOTE 'X': THE SPACING OF THE SIGN SUPPORT ANCHORS MAY BE ADJUSTED IN THE EVENT OF CONFLICTS WITH THE EXISTING VERTICAL REINFORCEMENT. SUCH ADJUSTMENTS SHALL BE KEPT TO THE ABSOLUTE MINIMUM AMOUNT REQUIRED AND IN NO CASE SHALL ANY OF THE INDICATED DIMENSIONS BE ADJUSTED MORE THAN 1". FOR EXAMPLE, THE 5'-6" DIMENSION MAY BE ADJUSTED TO A MINIMUM OF 5'-5" AND A MAXIMUM AMOUNT OF 5'-7". ANY SUCH ADJUSTMENTS MUST ALSO BE MADE IN THE SPACING OF THE LOWER PROJECTING MEMBERS. CARE MUST ALSO BE TAKEN TO INSURE THAT THE (CONTINUOUS) UPPER AND LOWER SUPPORT MEMBERS WILL FIT PROPERLY IF ADJUSTMENTS ARE MADE

PARAPET RECONSTRUCTION

SCALE: 3/8"=1'-0"

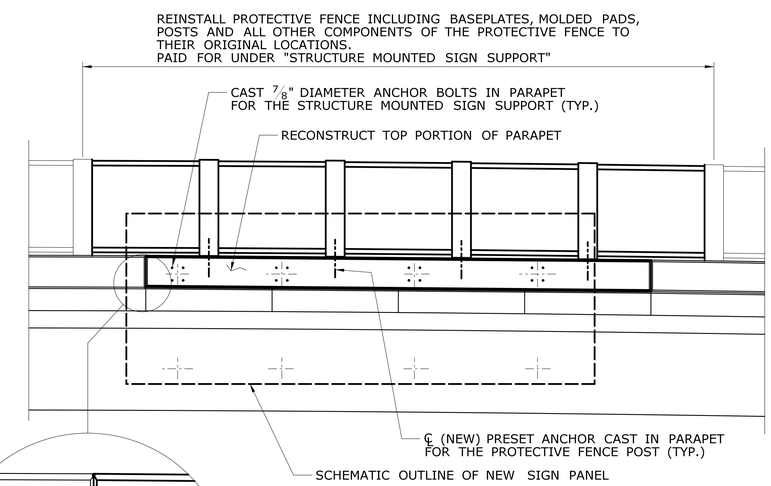

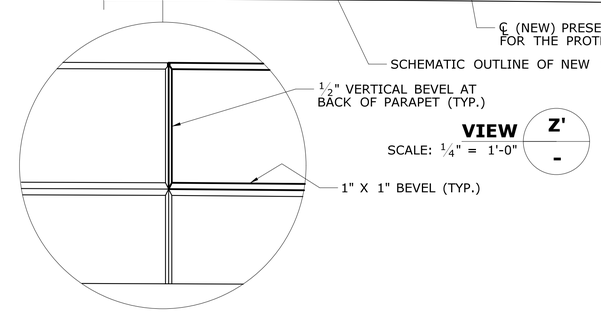

VIEW Z' -

SCALE: 1/4" = 1'-0"

SCALE: 1" = 1'-0"

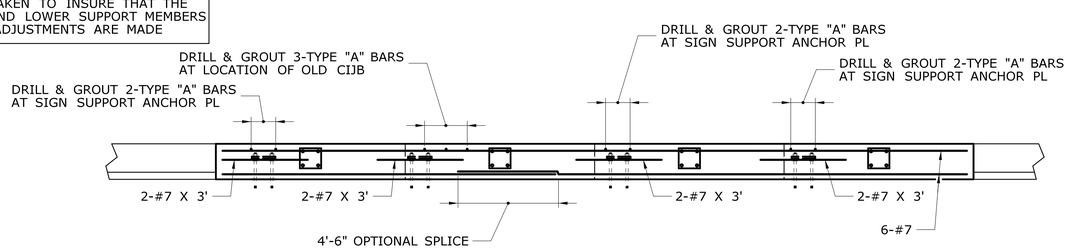

NEW REINFORCEMENT (ALL GALVANIZED)

SCALE: 3/8"=1'-0"

REV.	DATE	REVISION DESCRIPTION	SHEET NO.

THE INFORMATION, INCLUDING ESTIMATED QUANTITIES OF WORK, SHOWN ON THESE SHEETS IS BASED ON LIMITED INVESTIGATIONS BY THE STATE AND IS IN NO WAY WARRANTED TO INDICATE THE CONDITIONS OF ACTUAL QUANTITIES OF WORK WHICH WILL BE REQUIRED.

Plotted Date: 6/16/2015

DESIGNER/DRAFTER: RDD

CHECKED BY: JK

SCALE AS NOTED

STATE OF CONNECTICUT
DEPARTMENT OF TRANSPORTATION

Filename: ...\SB_4_CONCRETE PARAPET RECONSTRUCTION -1.dgn

SIGNATURE/BLOCK: OFFICE OF ENGINEERING

APPROVED BY:

PROJECT TITLE: REPLACEMENT OF OVERHEAD SIGN SUPPORTS ON VARIOUS ROUTES STATEWIDE

TOWN: EAST HARTFORD

DRAWING TITLE: PARAPET RECONSTRUCTION - 1

PROJECT NO. 170-3303

DRAWING NO. S-4

SHEET NO. 05.04

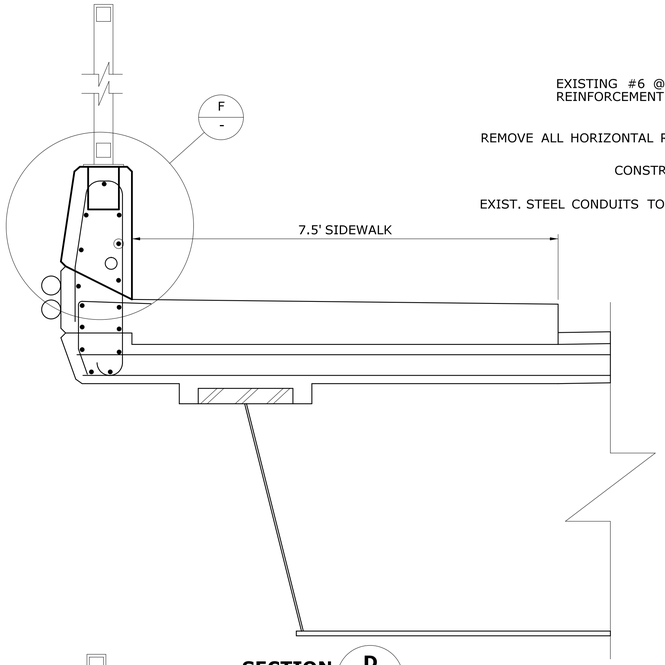

SECTION D
SCALE: $\frac{3}{4}$" = 1'-0"

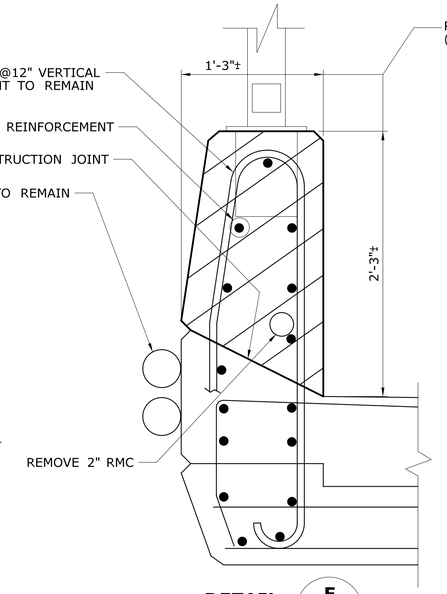

DETAIL F
SCALE: $1\frac{1}{2}$" = 1'-0"

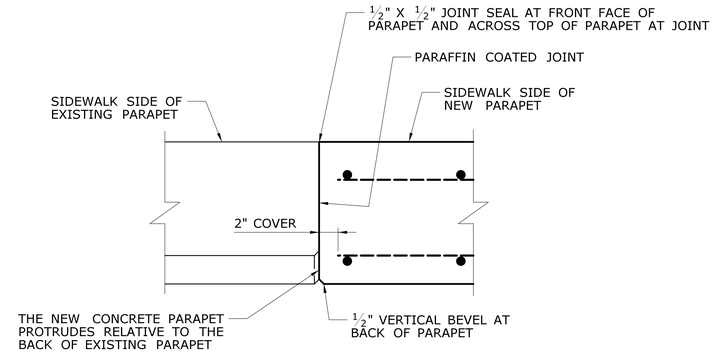

DETAIL PF / PF' OPPOSITE HAND
SCALE: $1\frac{1}{2}$" = 1'-0" SCALE: $1\frac{1}{2}$" = 1'-0"

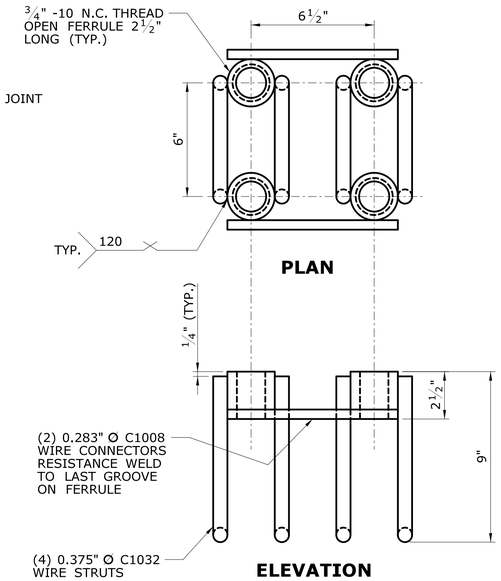

(NEW) PRESET ANCHOR DETAILS
NTS

THE PRESET ANCHORS SHALL BE GALVANIZED.
THE CONTRACTOR SHALL REUSE THE EXISTING STAINLESS STEEL BOLTS AND MOLDED PADS FOR THE REINSTALLATION OF THE PROTECTIVE FENCE POSTS.

THE CONTRACTOR SHALL CONFIRM THE DIMENSIONS OF THE PRESET ANCHORS BEFORE ORDERING THEM. IN ADDITION, AFTER FABRICATION OF THE NEW PRESET ANCHORS BUT PRIOR TO CASTING THEM IN THE RECONSTRUCTED PARAPET THE CONTRACTOR SHALL DEMONSTRATE TO THE SATISFACTION OF THE ENGINEER THAT THE ANCHORS WILL FIT PERFECTLY WITH THE HOLE PATTERN IN THE BASEPLATE OF THE PROTECTIVE FENCE AS WELL AS WITH THE STAINLESS STEEL BOLTS.

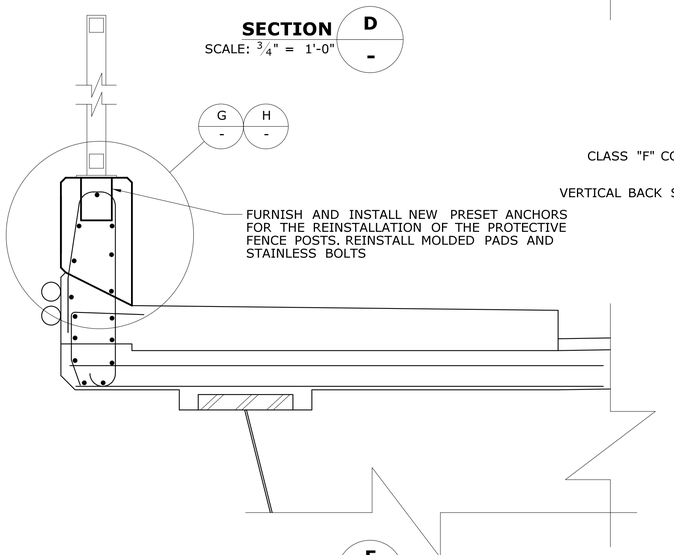

SECTION E
SCALE: $\frac{3}{4}$" = 1'-0"

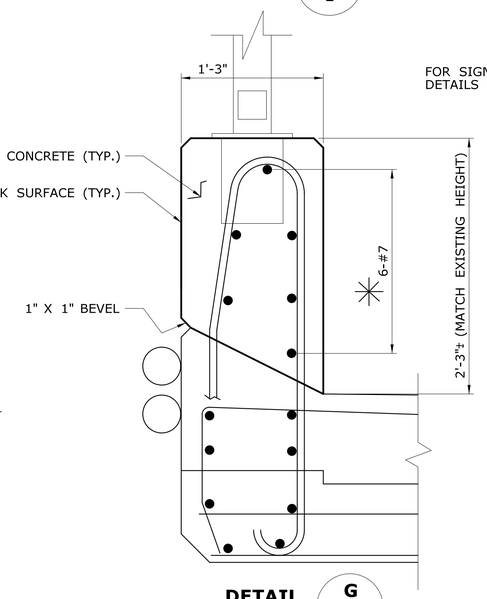

DETAIL G
SCALE: $1\frac{1}{2}$" = 1'-0"

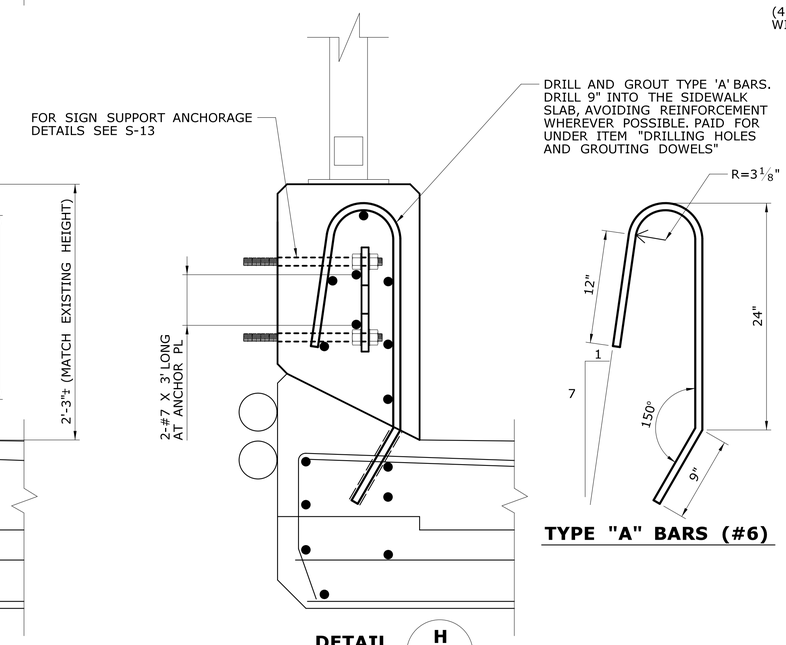

DETAIL H
(NEAR SIGN SUPPORT ANCHORAGES)
SCALE: $1\frac{1}{2}$" = 1'-0"

TYPE "A" BARS (#6)

✳ THE HORIZONTAL #7 BARS SHALL BE PLACED INSIDE THE EXISTING VERTICAL REINFORCEMENT AS SHOWN. TO SIMPLIFY THE INSTALLATION OF THESE BARS THE CONTRACTOR MAY SPLICE THESE BARS TOGETHER. THE MINIMUM SPLICE LENGTH SHALL BE 4'-6".

REV.	DATE	REVISION DESCRIPTION	SHEET NO.

THE INFORMATION, INCLUDING ESTIMATED QUANTITIES OF WORK, SHOWN ON THESE SHEETS IS BASED ON LIMITED INVESTIGATIONS BY THE STATE AND IS IN NO WAY WARRANTED TO INDICATE THE CONDITIONS OF ACTUAL QUANTITIES OF WORK WHICH WILL BE REQUIRED.

Plotted Date: 6/16/2015

DESIGNER/DRAFTER: RDD
CHECKED BY: JK
SCALE AS NOTED

STATE OF CONNECTICUT
DEPARTMENT OF TRANSPORTATION

Filename: ...\SB_5_CONCRETE PARAPET RECONSTRUCTION - 2.dgn

SIGNATURE/ BLOCK:
OFFICE OF ENGINEERING
APPROVED BY:

PROJECT TITLE:
REPLACEMENT OF OVERHEAD SIGN SUPPORTS ON VARIOUS ROUTES STATEWIDE

TOWN: EAST HARTFORD

DRAWING TITLE: PARAPET RECONSTRUCTION - 2

PROJECT NO. 170-3303
DRAWING NO. S-5
SHEET NO. 05.05

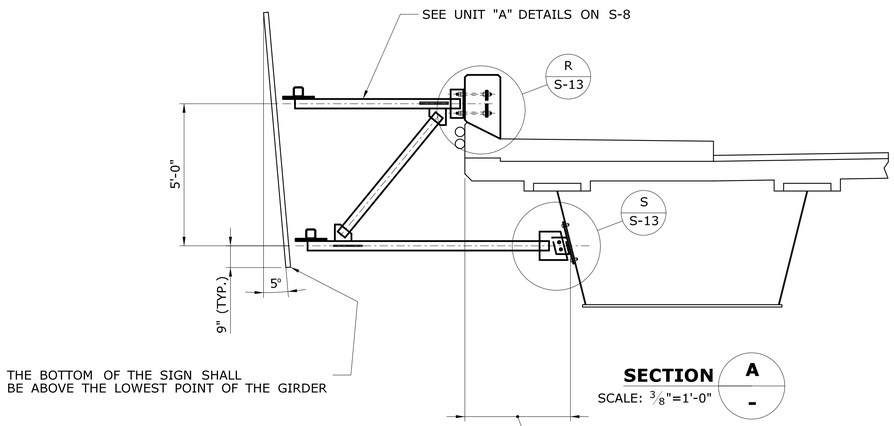

SECTION A
SCALE: 3/8"=1'-0"

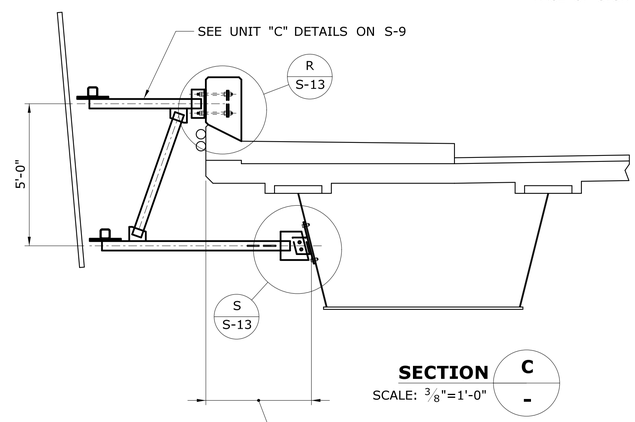

SECTION C
SCALE: 3/8"=1'-0"

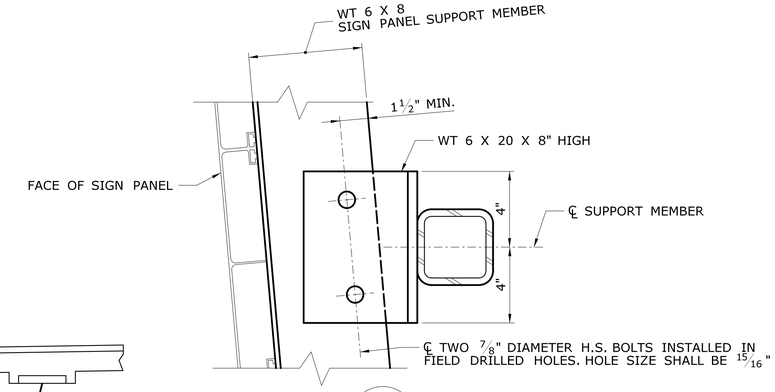

DETAIL ZZ
SCALE: 3"=1'-0"

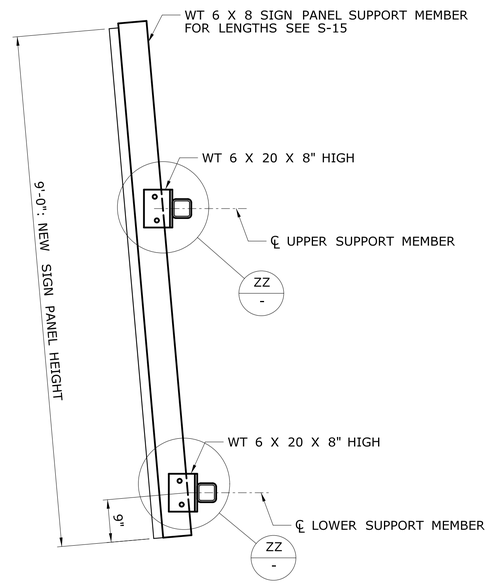

(TYPICAL) SECTION Z
SCALE: 3/4"=1'-0"

NOTE: SECTION Z SHALL BE CONSIDERED A TYPICAL SECTION THAT IS TAKEN THROUGH THE SIGN PANEL NEAR THE SIGN PANEL SUPPORT MEMBERS

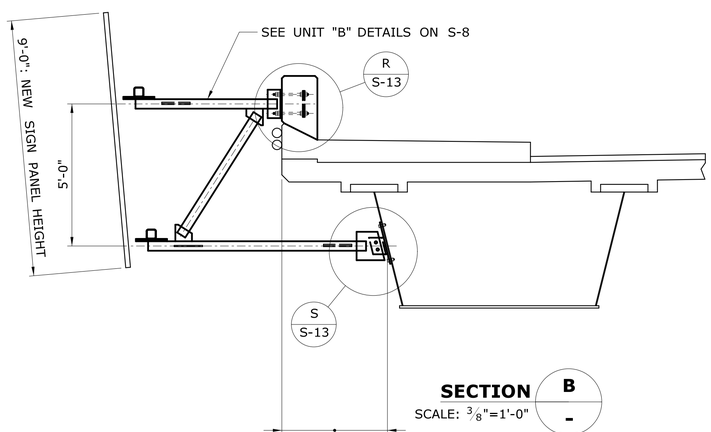

SECTION B
SCALE: 3/8"=1'-0"

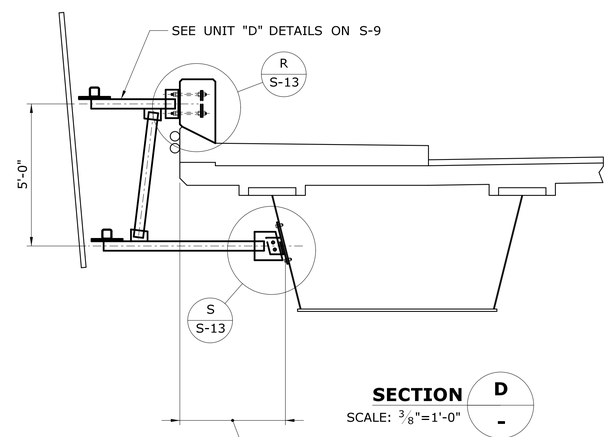

SECTION D
SCALE: 3/8"=1'-0"

REV.	DATE	REVISION DESCRIPTION	SHEET NO.

THE INFORMATION, INCLUDING ESTIMATED QUANTITIES OF WORK, SHOWN ON THESE SHEETS IS BASED ON LIMITED INVESTIGATIONS BY THE STATE AND IS IN NO WAY WARRANTED TO INDICATE THE CONDITIONS OF ACTUAL QUANTITIES OF WORK WHICH WILL BE REQUIRED.

Plotted Date: 6/16/2015

DESIGNER/DRAFTER: RDD
CHECKED BY: JK
SCALE AS NOTED

STATE OF CONNECTICUT
DEPARTMENT OF TRANSPORTATION

Filename: ...\SB_6_Structure Mounted Sign Support - 4.dgn

SIGNATURE/BLOCK: OFFICE OF ENGINEERING
APPROVED BY:

PROJECT TITLE: REPLACEMENT OF OVERHEAD SIGN SUPPORTS ON VARIOUS ROUTES STATEWIDE

TOWN: EAST HARTFORD

DRAWING TITLE: CROSS SECTIONS

PROJECT NO. 170-3303
DRAWING NO. S-6
SHEET NO. 05.06

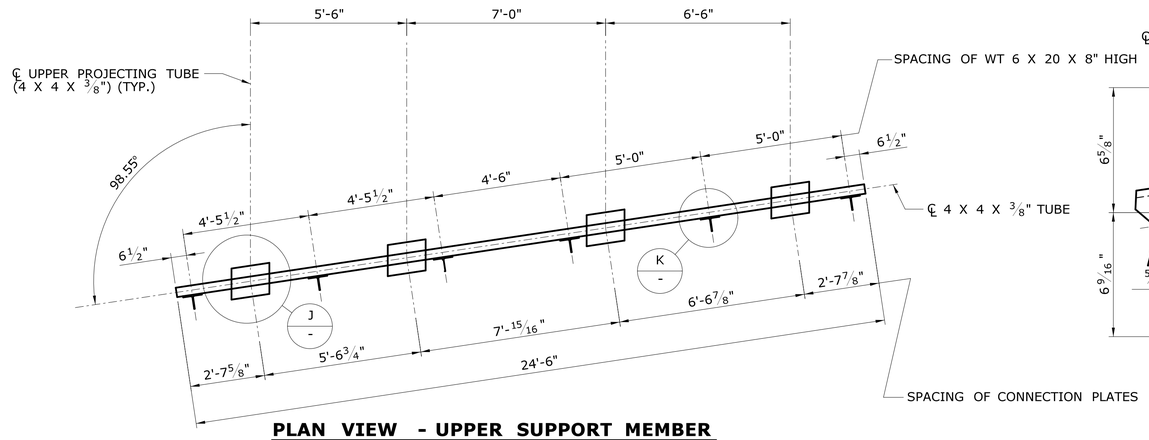

PLAN VIEW - UPPER SUPPORT MEMBER

SCALE: 3/8"=1'-0"

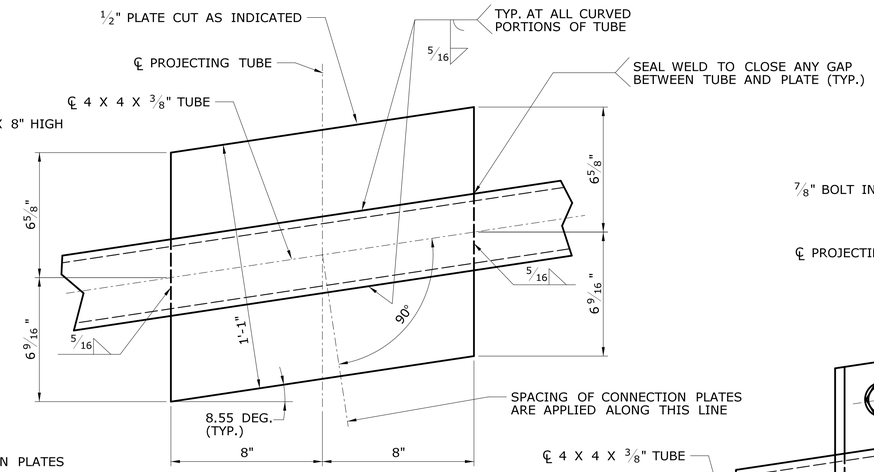

(TYPICAL) DETAIL CONNECTION PLATE J -

SCALE: 3"=1'-0"

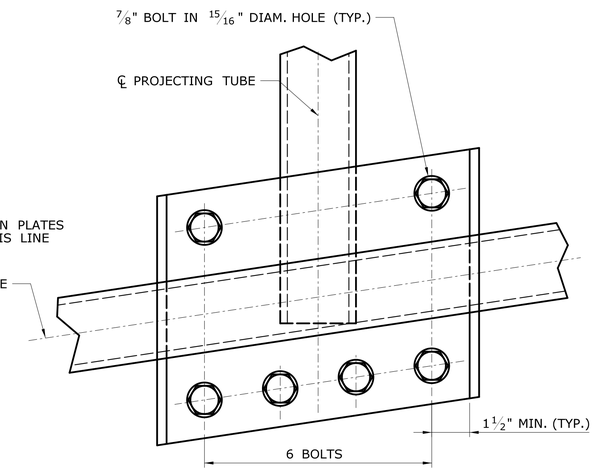

(TYPICAL) INSTALLATION DETAIL (FIELD DRILLED HOLES) JL -

SCALE: 3"=1'-0"

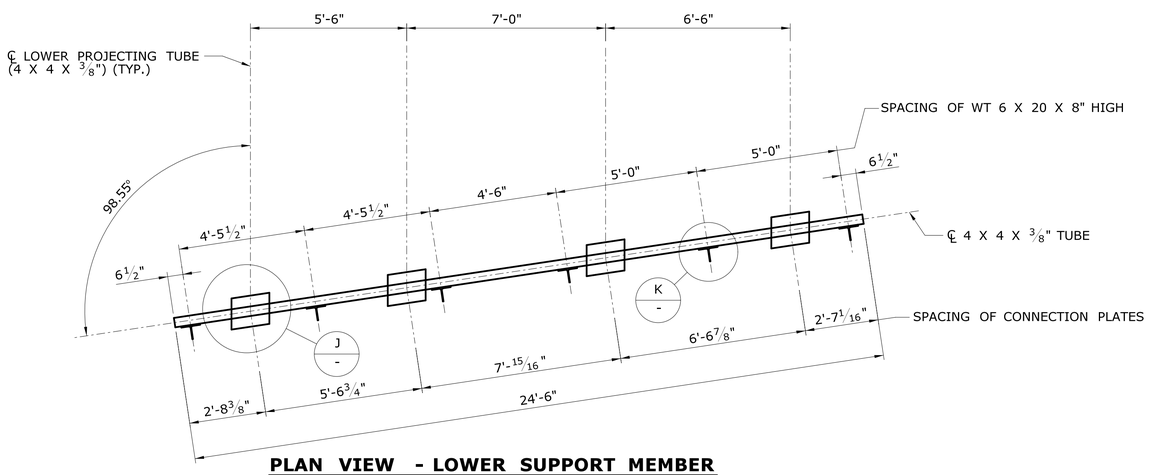

PLAN VIEW - LOWER SUPPORT MEMBER

SCALE: 3/8"=1'-0"

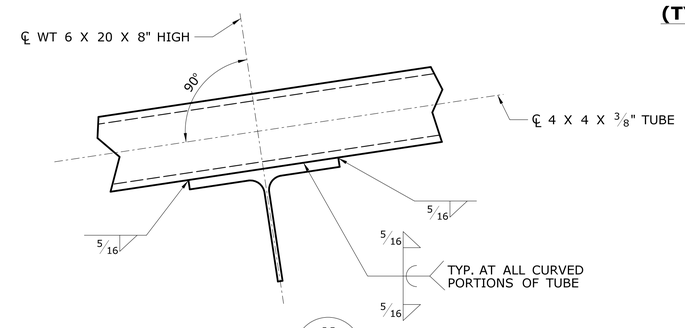

(TYPICAL) DETAIL K -

SCALE: 3"=1'-0"

REV.	DATE	REVISION DESCRIPTION	SHEET NO.

THE INFORMATION, INCLUDING ESTIMATED QUANTITIES OF WORK, SHOWN ON THESE SHEETS IS BASED ON LIMITED INVESTIGATIONS BY THE STATE AND IS IN NO WAY WARRANTED TO INDICATE THE CONDITIONS OF ACTUAL QUANTITIES OF WORK WHICH WILL BE REQUIRED.

Plotted Date: 6/16/2015

DESIGNER/DRAFTER: RDD

CHECKED BY: JK

SCALE AS NOTED

STATE OF CONNECTICUT
DEPARTMENT OF TRANSPORTATION

Filename: ...\SB_7_Structure Mounted Sign Support - 3.dgn

SIGNATURE/BLOCK: OFFICE OF ENGINEERING

APPROVED BY:

PROJECT TITLE: REPLACEMENT OF OVERHEAD SIGN SUPPORTS ON VARIOUS ROUTES STATEWIDE

TOWN: EAST HARTFORD

DRAWING TITLE: UPPER AND LOWER SUPPORT MEMBERS

PROJECT NO. 170-3303

DRAWING NO. S-7

SHEET NO. 05.07

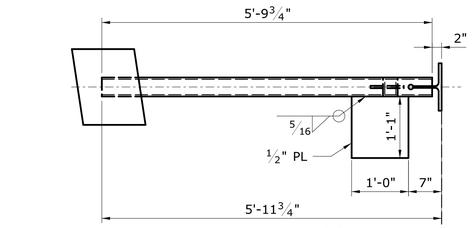

SECTION AU
SCALE: 3/4"=1'-0"

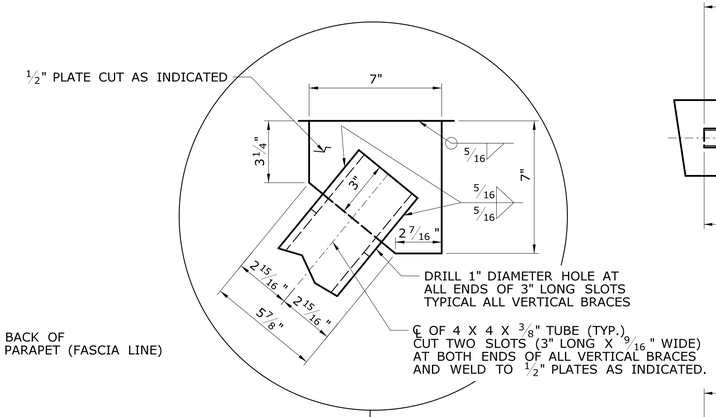

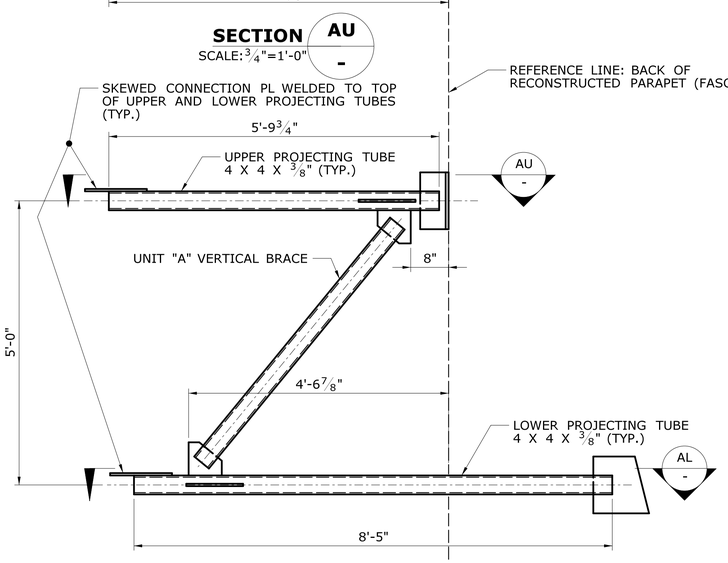

ELEVATION VIEW
UNIT "A"
SCALE: 3/4"=1'-0"

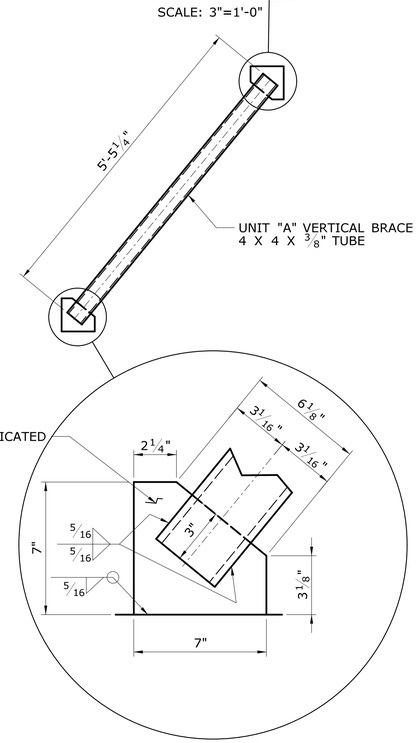

SCALE: 3"=1'-0"

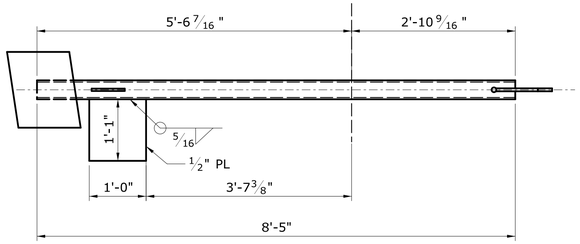

SECTION AL
SCALE: 3/4"=1'-0"

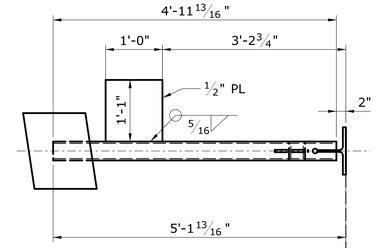

SECTION BU
SCALE: 3/4"=1'-0"

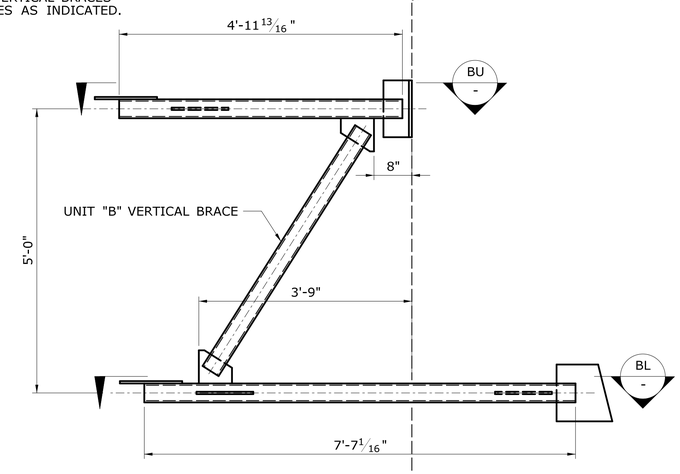

ELEVATION VIEW
UNIT "B"
SCALE: 3/4"=1'-0"

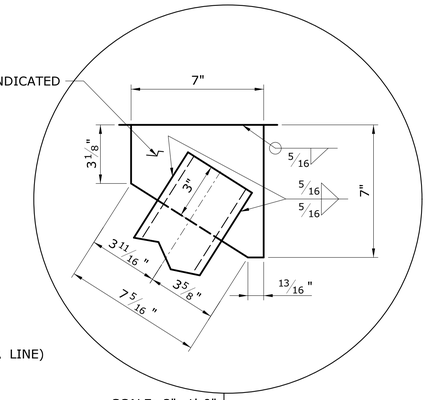

SCALE: 3"=1'-0"

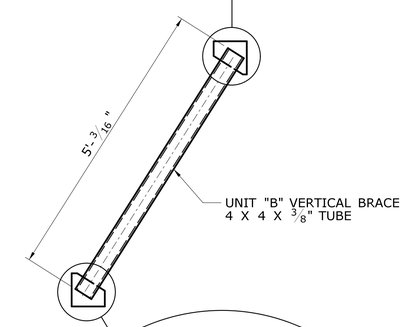

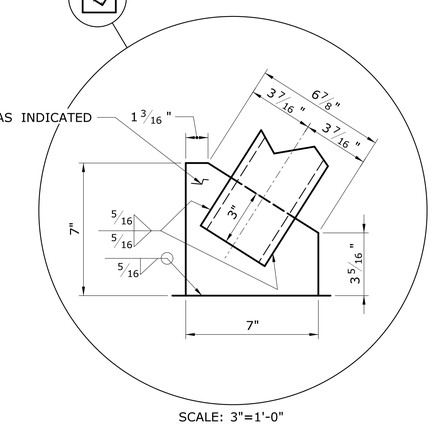

SCALE: 3"=1'-0"

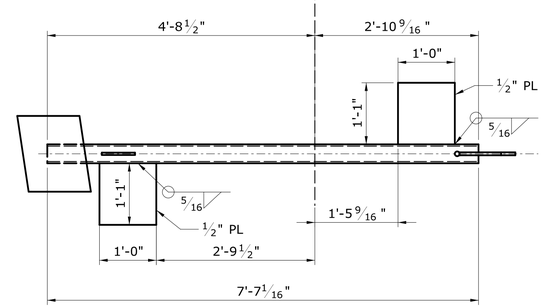

SECTION BL
SCALE: 3/4"=1'-0"

REV.	DATE	REVISION DESCRIPTION	SHEET NO.

THE INFORMATION, INCLUDING ESTIMATED QUANTITIES OF WORK, SHOWN ON THESE SHEETS IS BASED ON LIMITED INVESTIGATIONS BY THE STATE AND IS IN NO WAY WARRANTED TO INDICATE THE CONDITIONS OF ACTUAL QUANTITIES OF WORK WHICH WILL BE REQUIRED.

Plotted Date: 6/16/2015

DESIGNER/DRAFTER: RDD
CHECKED BY: JK
SCALE AS NOTED

STATE OF CONNECTICUT
DEPARTMENT OF TRANSPORTATION

Filename: ...\SB_8_Structure Mounted Sign Support - 9.dgn

SIGNATURE/BLOCK:
OFFICE OF ENGINEERING
APPROVED BY:

PROJECT TITLE:
REPLACEMENT OF OVERHEAD SIGN SUPPORTS ON VARIOUS ROUTES STATEWIDE

TOWN: EAST HARTFORD

DRAWING TITLE: SIGN UNIT DETAILS - 1

PROJECT NO. 170-3303
DRAWING NO. S-8
SHEET NO. 05.08

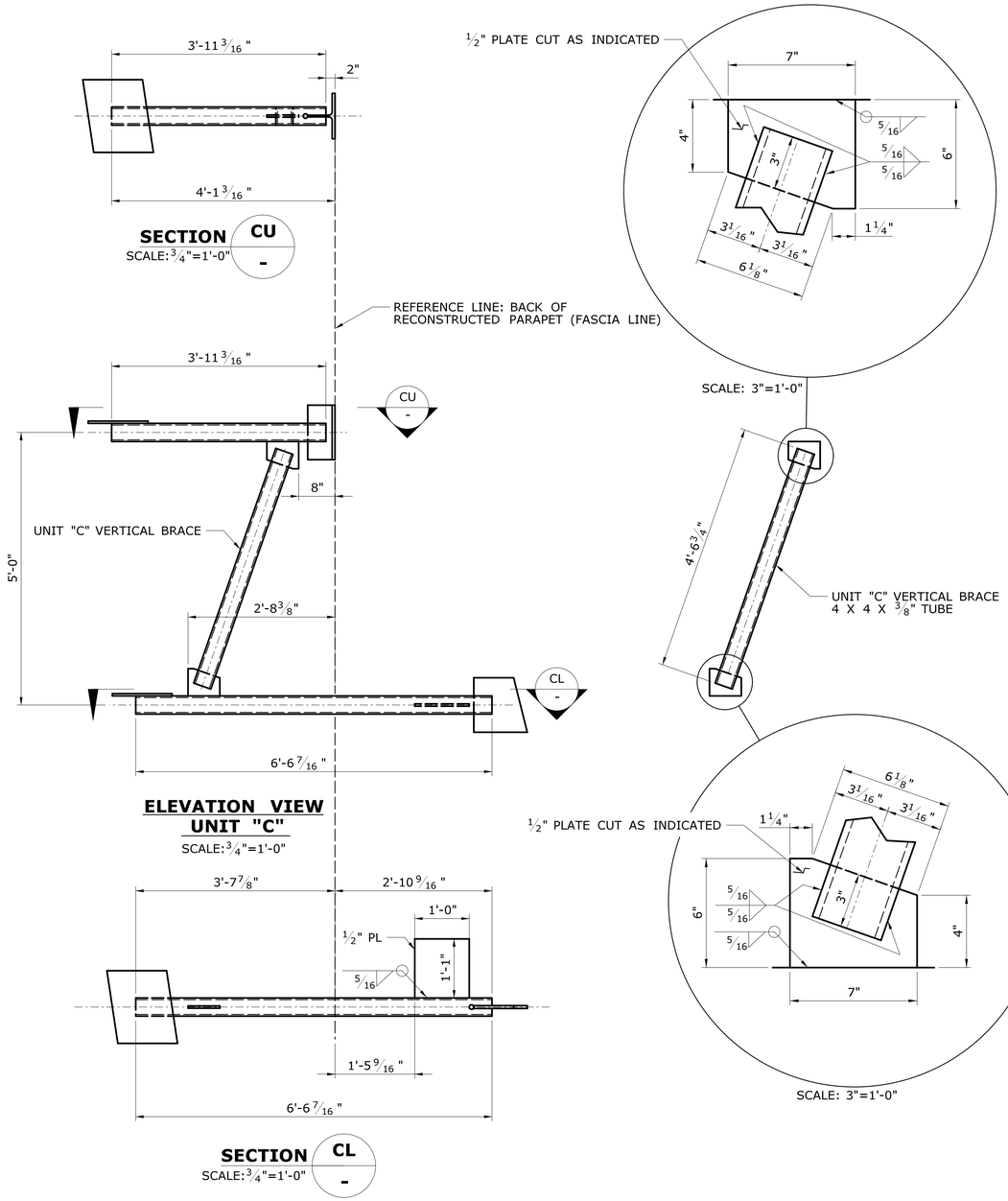

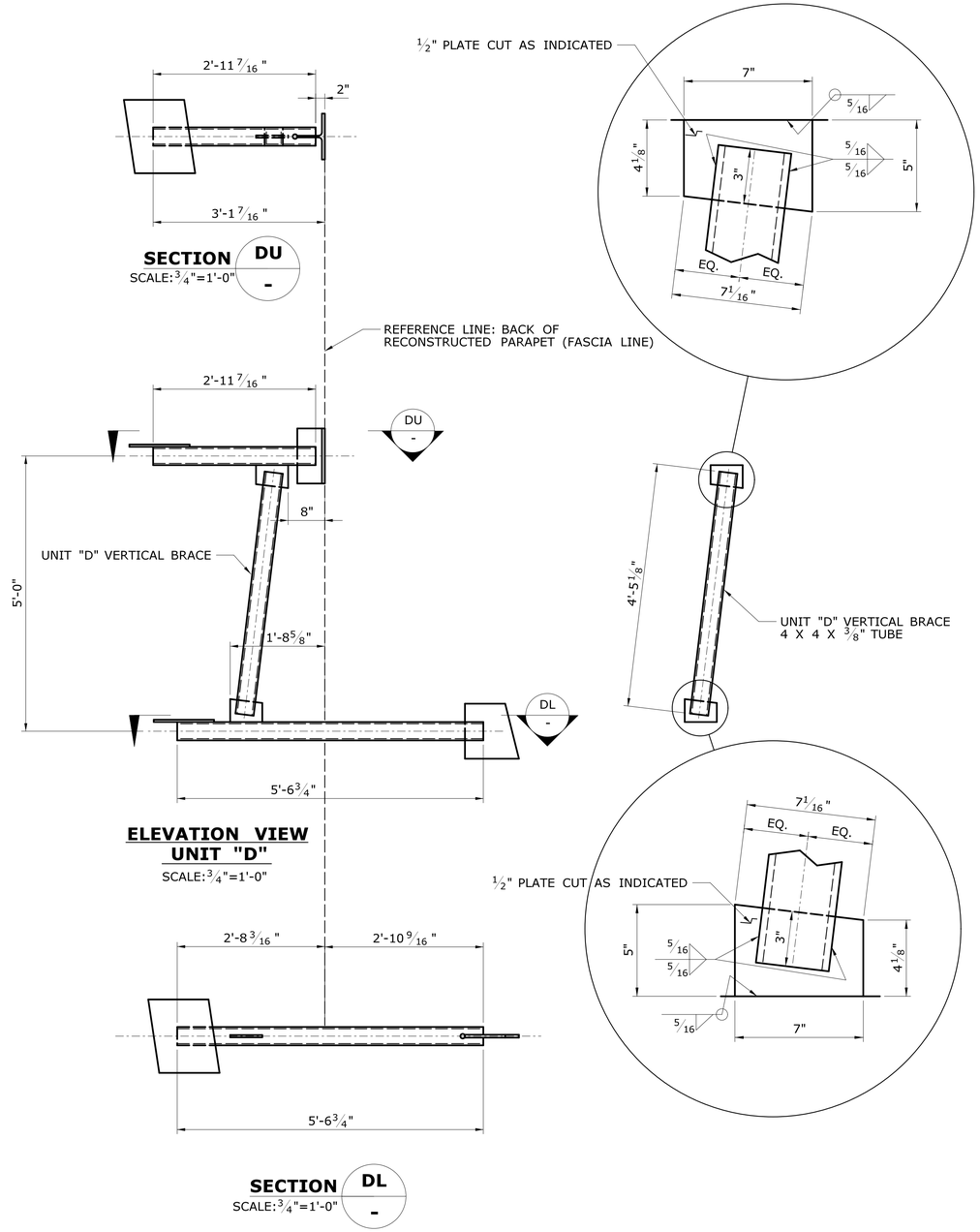

REV.	DATE	REVISION DESCRIPTION	SHEET NO.

THE INFORMATION, INCLUDING ESTIMATED QUANTITIES OF WORK, SHOWN ON THESE SHEETS IS BASED ON LIMITED INVESTIGATIONS BY THE STATE AND IS IN NO WAY WARRANTED TO INDICATE THE CONDITIONS OF ACTUAL QUANTITIES OF WORK WHICH WILL BE REQUIRED.

Plotted Date: 6/16/2015

DESIGNER/DRAFTER: RDD

CHECKED BY: JK

SCALE AS NOTED

STATE OF CONNECTICUT
DEPARTMENT OF TRANSPORTATION

Filename: ...\SB_9_Structure Mounted Sign Support - 10.dgn

SIGNATURE/BLOCK: OFFICE OF ENGINEERING

APPROVED BY:

PROJECT TITLE: REPLACEMENT OF OVERHEAD SIGN SUPPORTS ON VARIOUS ROUTES STATEWIDE

TOWN: EAST HARTFORD

DRAWING TITLE: SIGN UNIT DETAILS - 2

PROJECT NO. 170-3303

DRAWING NO. S-9

SHEET NO. 05.09

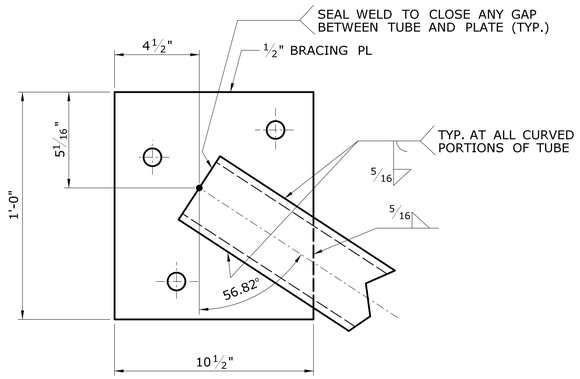

DETAIL UA / -
SCALE: 3"=1'-0"

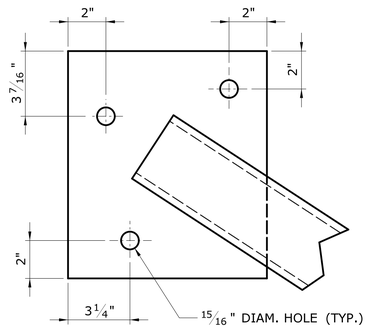

DETAIL (HOLES) UA / -
SCALE: 3"=1'-0"

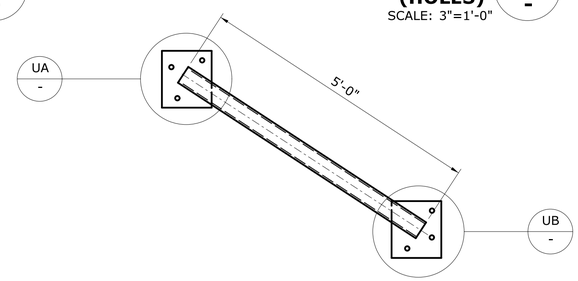

PLAN VIEW - UPPER BRACE
SCALE: 3/4"=1'-0"

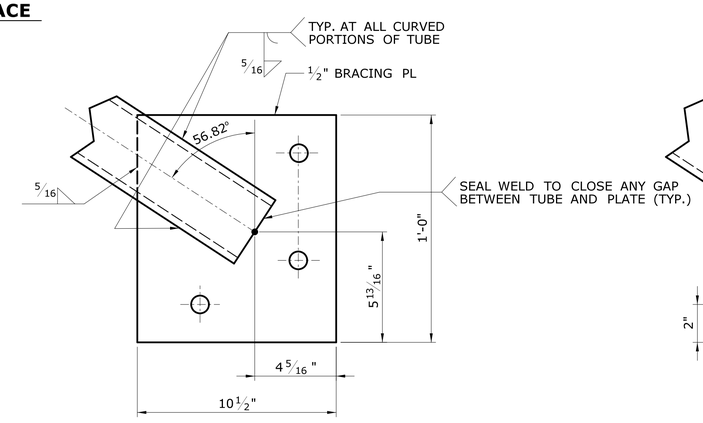

DETAIL UB / -
SCALE: 3"=1'-0"

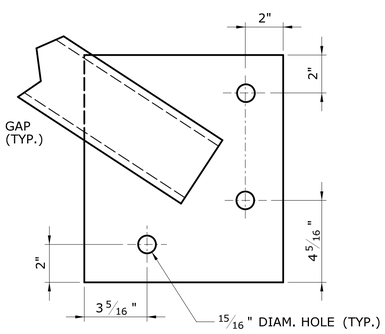

DETAIL (HOLES) UB / -
SCALE: 3"=1'-0"

REV.	DATE	REVISION DESCRIPTION	SHEET NO.

THE INFORMATION, INCLUDING ESTIMATED QUANTITIES OF WORK, SHOWN ON THESE SHEETS IS BASED ON LIMITED INVESTIGATIONS BY THE STATE AND IS IN NO WAY WARRANTED TO INDICATE THE CONDITIONS OF ACTUAL QUANTITIES OF WORK WHICH WILL BE REQUIRED.

Plotted Date: 6/16/2015

DESIGNER/DRAFTER: **RDD**
CHECKED BY: **JK**
SCALE AS NOTED

STATE OF CONNECTICUT
DEPARTMENT OF TRANSPORTATION

Filename: ...\SB_10_Structure Mounted Sign Support - 6.dgn

SIGNATURE/ BLOCK:
OFFICE OF ENGINEERING
APPROVED BY:

PROJECT TITLE:
REPLACEMENT OF OVERHEAD SIGN SUPPORTS ON VARIOUS ROUTES STATEWIDE

TOWN: **EAST HARTFORD**

DRAWING TITLE: **UPPER BRACE**

PROJECT NO. **170-3303**
DRAWING NO. **S-10**
SHEET NO. **05.010**

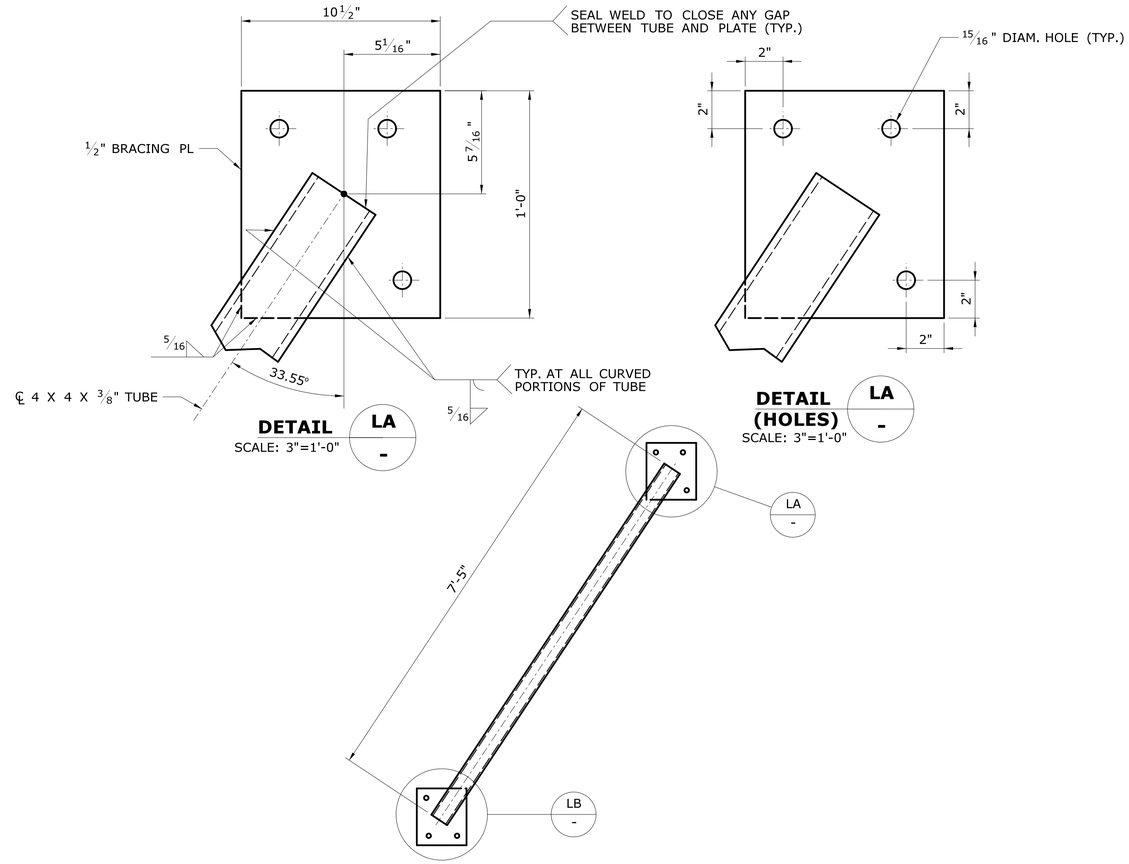

DETAIL LA - SCALE: 3"=1'-0"

DETAIL (HOLES) LA - SCALE: 3"=1'-0"

PLAN VIEW - LOWER BRACE NO. 1

SCALE: 3/4"=1'-0"

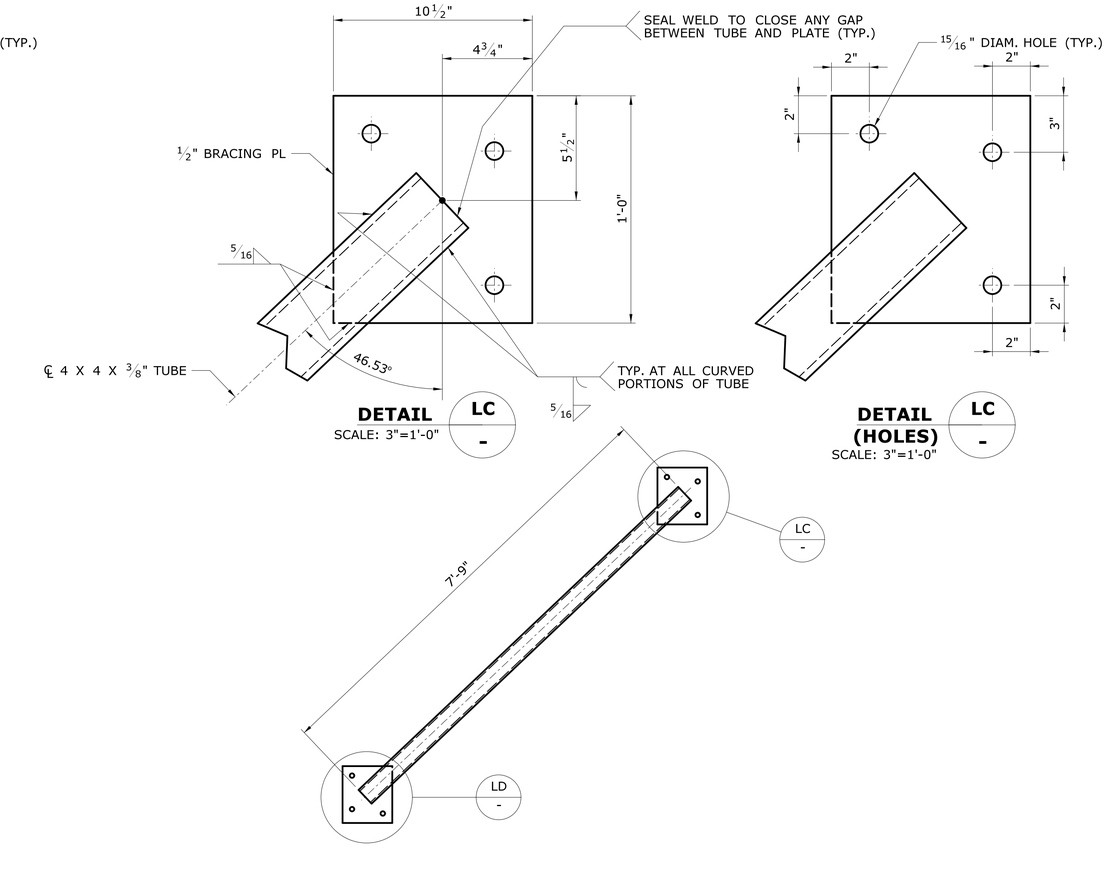

DETAIL LC - SCALE: 3"=1'-0"

DETAIL (HOLES) LC - SCALE: 3"=1'-0"

PLAN VIEW - LOWER BRACE NO. 2

SCALE: 3/4"=1'-0"

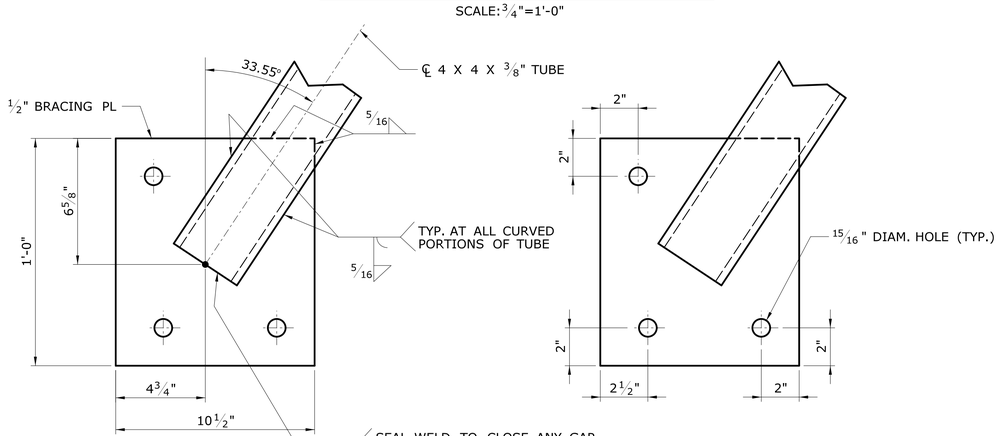

DETAIL LB - SCALE: 3"=1'-0"

DETAIL (HOLES) LB - SCALE: 3"=1'-0"

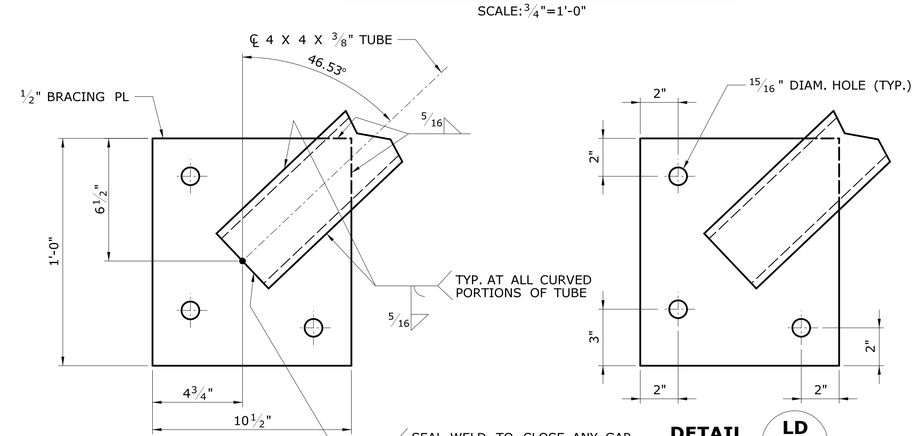

DETAIL LD - SCALE: 3"=1'-0"

DETAIL (HOLES) LD - SCALE: 3"=1'-0"

REV.	DATE	REVISION DESCRIPTION	SHEET NO.

THE INFORMATION, INCLUDING ESTIMATED QUANTITIES OF WORK, SHOWN ON THESE SHEETS IS BASED ON LIMITED INVESTIGATIONS BY THE STATE AND IS IN NO WAY WARRANTED TO INDICATE THE CONDITIONS OF ACTUAL QUANTITIES OF WORK WHICH WILL BE REQUIRED.

Plotted Date: 6/16/2015

DESIGNER/DRAFTER: RDD

CHECKED BY: JK

SCALE AS NOTED

STATE OF CONNECTICUT
DEPARTMENT OF TRANSPORTATION

Filename: ...\SB_11_Structure Mounted Sign Support - 5.dgn

SIGNATURE/BLOCK: OFFICE OF ENGINEERING

APPROVED BY:

PROJECT TITLE: REPLACEMENT OF OVERHEAD SIGN SUPPORTS ON VARIOUS ROUTES STATEWIDE

TOWN: EAST HARTFORD

DRAWING TITLE: LOWER BRACES

PROJECT NO. 170-3303

DRAWING NO. S-11

SHEET NO. 05.011

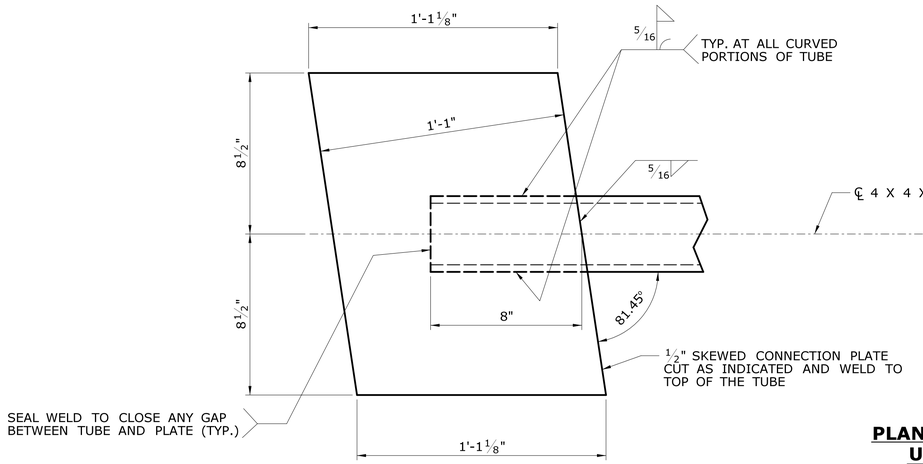

PLAN VIEW: TYPICAL END DETAILS
UPPER PROJECTING TUBES
SCALE: 3"=1'-0"

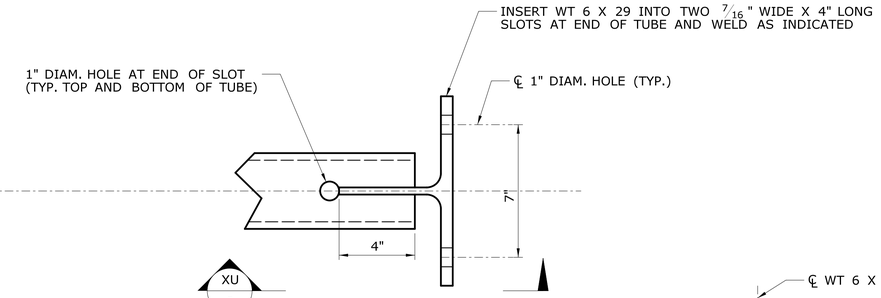

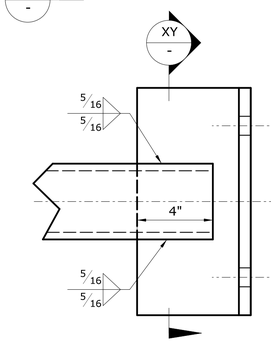

VIEW XU / -
SCALE: 3"=1'-0"

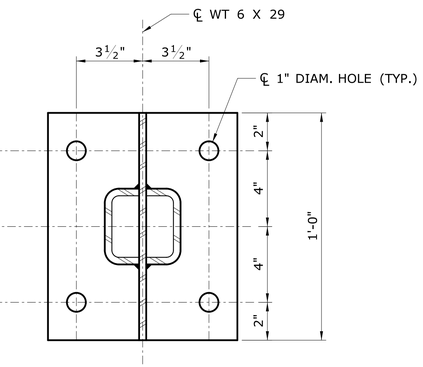

SECTION XY / -
SCALE: 3"=1'-0"

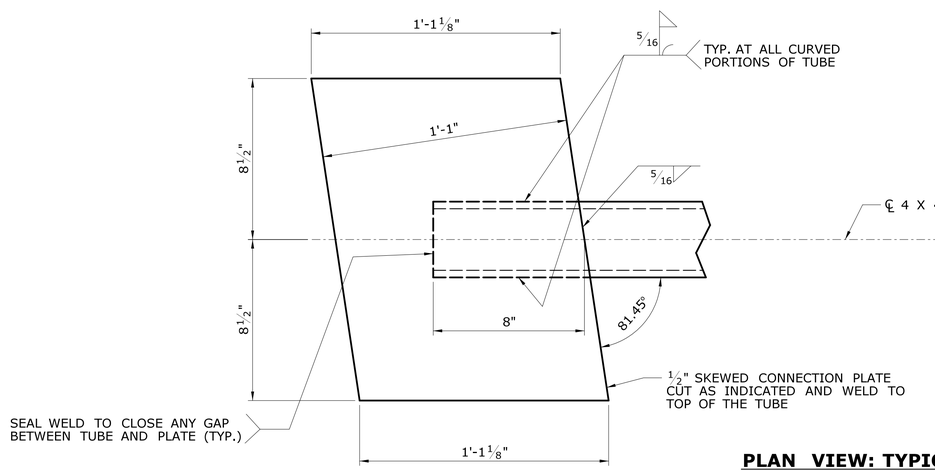

PLAN VIEW: TYPICAL END DETAILS
LOWER PROJECTING TUBES
SCALE: 3"=1'-0"

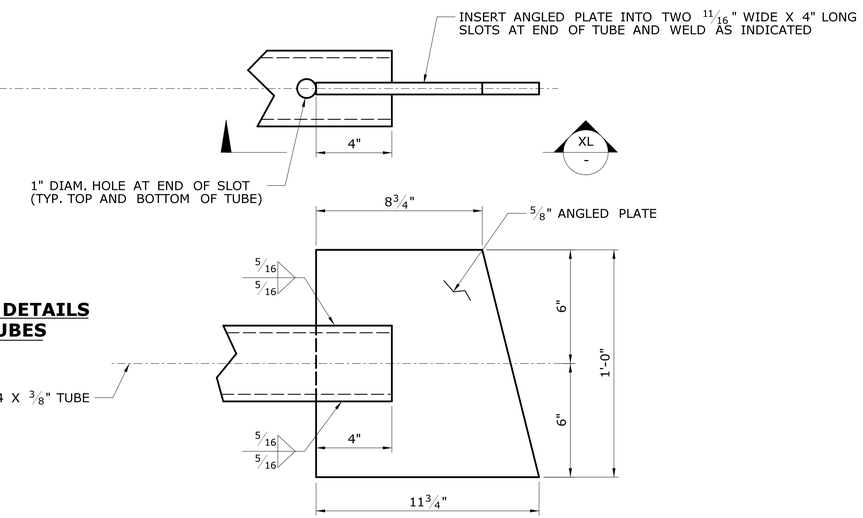

VIEW XL / -
SCALE: 3"=1'-0"

REV.	DATE	REVISION DESCRIPTION	SHEET NO.

THE INFORMATION, INCLUDING ESTIMATED QUANTITIES OF WORK, SHOWN ON THESE SHEETS IS BASED ON LIMITED INVESTIGATIONS BY THE STATE AND IS IN NO WAY WARRANTED TO INDICATE THE CONDITIONS OF ACTUAL QUANTITIES OF WORK WHICH WILL BE REQUIRED.

Plotted Date: 6/16/2015

DESIGNER/DRAFTER: **RDD**
CHECKED BY: **JK**
SCALE AS NOTED

STATE OF CONNECTICUT
DEPARTMENT OF TRANSPORTATION

Filename: ...\SB_12_Structure Mounted Sign Support - 7.dgn

SIGNATURE/ BLOCK: **OFFICE OF ENGINEERING**
APPROVED BY:

PROJECT TITLE: **REPLACEMENT OF OVERHEAD SIGN SUPPORTS ON VARIOUS ROUTES STATEWIDE**

TOWN: **EAST HARTFORD**
DRAWING TITLE: **MISCELLANEOUS DETAILS - 1**

PROJECT NO. **170-3303**
DRAWING NO. **S-12**
SHEET NO. **05.012**

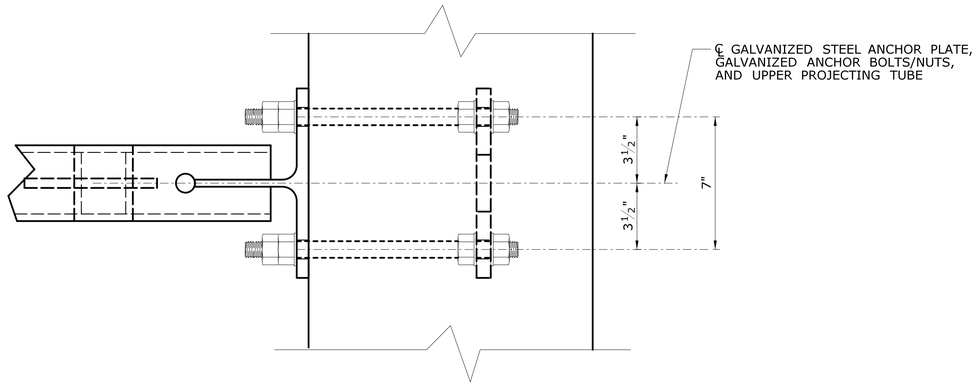

VIEW V -
SCALE: 3"=1'-0"

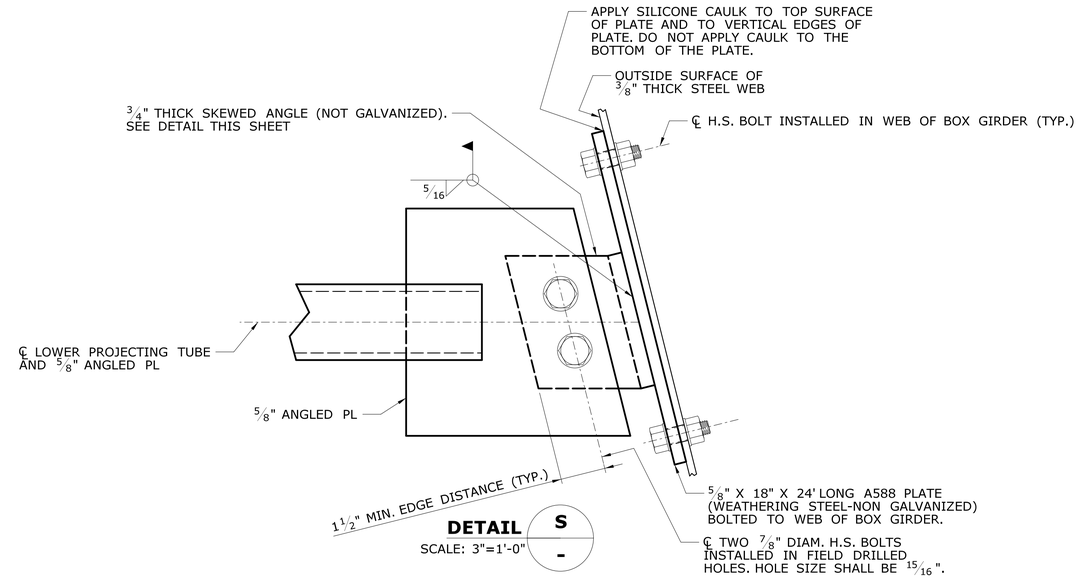

DETAIL S -
SCALE: 3"=1'-0"

V -

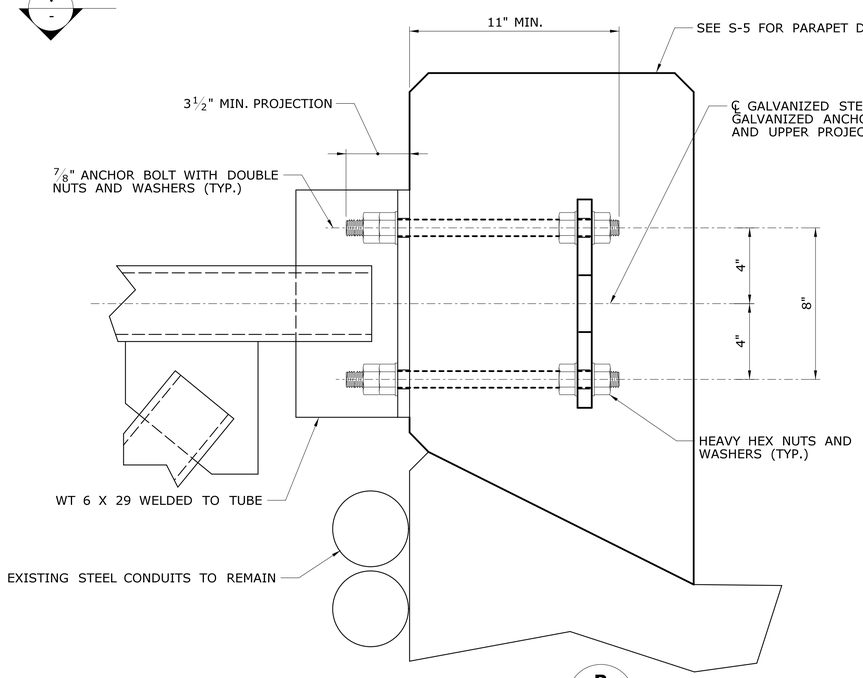

DETAIL R -
SCALE: 3"=1'-0"

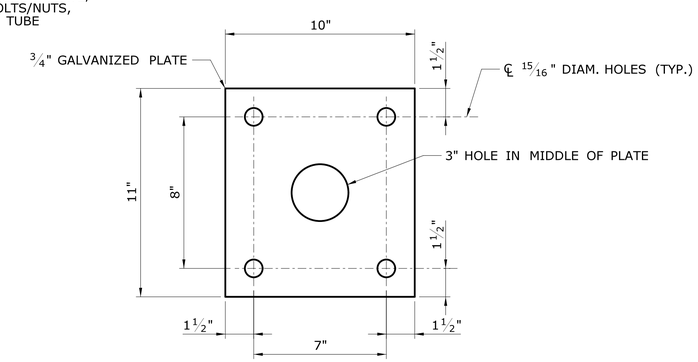

GALVANIZED STEEL ANCHOR PLATE (4 REQ'D)
SCALE: 3"=1'-0"

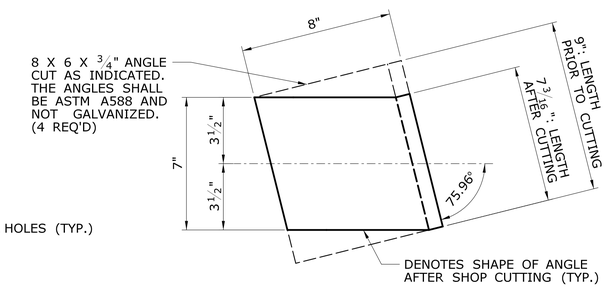

SKEWED ANGLE (AFTER SHOP CUTTING)
SCALE: 3"=1'-0"

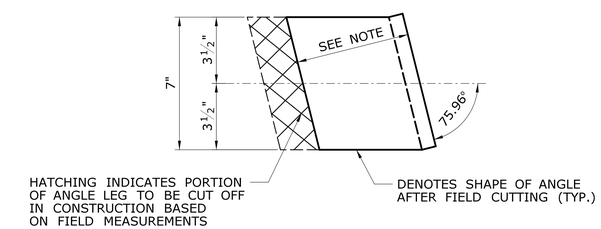

SKEWED ANGLE (AFTER FIELD CUTTING)
SCALE: 3"=1'-0"

NOTE: CONTRACTOR SHALL CUT THE LONG LEG OF THE ANGLE TO FIT THE FIELD CONDITIONS, BASED ON FIELD MEASUREMENTS. THE LENGTH OF THE ANGLE LEG SHALL BE SUFFICIENT TO ACCOMMODATE THE MINIMUM EDGE DISTANCES OF THE 7/8" DIAMETER BOLTS SHOWN IN DETAIL "S" ABOVE.

REV.	DATE	REVISION DESCRIPTION	SHEET NO.

THE INFORMATION, INCLUDING ESTIMATED QUANTITIES OF WORK, SHOWN ON THESE SHEETS IS BASED ON LIMITED INVESTIGATIONS BY THE STATE AND IS IN NO WAY WARRANTED TO INDICATE THE CONDITIONS OF ACTUAL QUANTITIES OF WORK WHICH WILL BE REQUIRED.

Plotted Date: 6/16/2015

DESIGNER/DRAFTER: RDD
CHECKED BY: JK
SCALE AS NOTED

STATE OF CONNECTICUT
DEPARTMENT OF TRANSPORTATION

Filename: ...\SB_13_Structure Mounted Sign Support - 8.dgn

SIGNATURE/BLOCK: OFFICE OF ENGINEERING
APPROVED BY:

PROJECT TITLE: REPLACEMENT OF OVERHEAD SIGN SUPPORTS ON VARIOUS ROUTES STATEWIDE

TOWN: EAST HARTFORD

DRAWING TITLE: MISCELLANEOUS DETAILS - 2

PROJECT NO. 170-3303
DRAWING NO. S-13
SHEET NO. 05.013

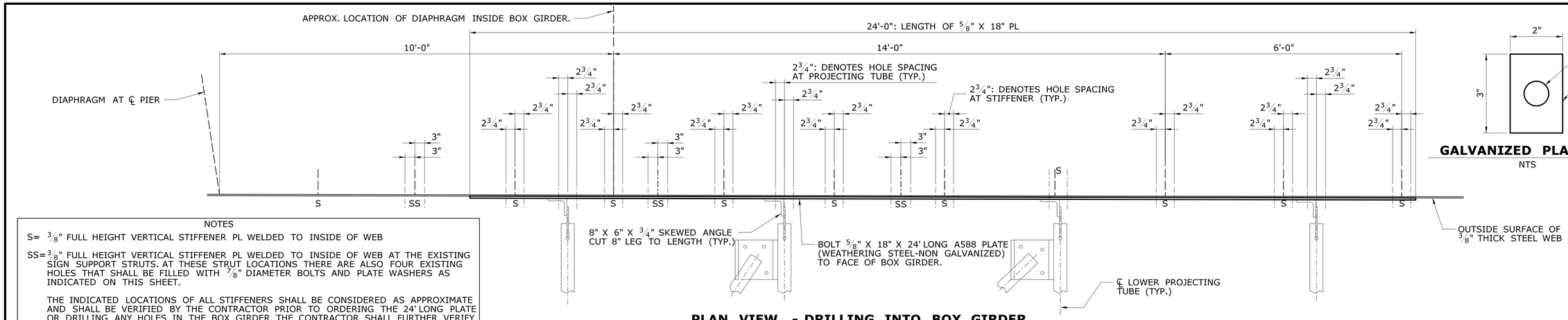

PLAN VIEW - DRILLING INTO BOX GIRDER

SCALE: 3/4"=1'-0"

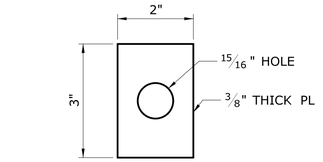

GALVANIZED PLATE WASHER

NTS

NOTES

S= 3/8" FULL HEIGHT VERTICAL STIFFENER PL WELDED TO INSIDE OF WEB

SS=3/8" FULL HEIGHT VERTICAL STIFFENER PL WELDED TO INSIDE OF WEB AT THE EXISTING SIGN SUPPORT STRUTS. AT THESE STRUT LOCATIONS THERE ARE ALSO FOUR EXISTING HOLES THAT SHALL BE FILLED WITH 7/8" DIAMETER BOLTS AND PLATE WASHERS AS INDICATED ON THIS SHEET.

THE INDICATED LOCATIONS OF ALL STIFFENERS SHALL BE CONSIDERED AS APPROXIMATE AND SHALL BE VERIFIED BY THE CONTRACTOR PRIOR TO ORDERING THE 24' LONG PLATE OR DRILLING ANY HOLES IN THE BOX GIRDER. THE CONTRACTOR SHALL FURTHER VERIFY THAT THE PROPOSED SIGN SUPPORT WILL FIT PROPERLY ON THE BOLTED PLATE, PRIOR TO DRILLING HOLES OR ORDERING THE 24' LONG PLATE.

NOTE "X"

THE DISTANCE BETWEEN THE CENTERLINE OF THE LOWER PROJECTING MEMBERS AND THE CENTERLINE OF THE 18" WIDE BY 24' LONG PLATE SHALL BE DETERMINED IN THE FIELD BY THE CONTRACTOR PRIOR TO FABRICATION OF THE STRUCTURE MOUNTED SIGN SUPPORT.
THE CONTRACTOR SHALL VERIFY THAT THE FOLLOWING CONDITIONS ARE CORRECT PRIOR TO PREPARATION OF SHOP DRAWINGS:

A) THE NEW PLATE WILL BE ABLE TO INCLUDE THE TOP EXISTING SIGN SUPPORT HOLES, AND

B) THERE WILL BE SUFFICIENT SPACE AVAILABLE ON THE NEW PLATE TO ALLOW FOR PROPER CONNECTION OF THE SKEWED ANGLES AND THE LOWER PROJECTING MEMBERS TO THE NEW PLATE

ANY ISSUES IDENTIFIED BY THE CONTRACTOR THAT MAY AFFECT PROPER INSTALLATION OF THE FINISHED SIGN SUPPORT STRUCTURE SHALL BE BROUGHT TO THE IMMEDIATE ATTENTION OF THE ENGINEER.

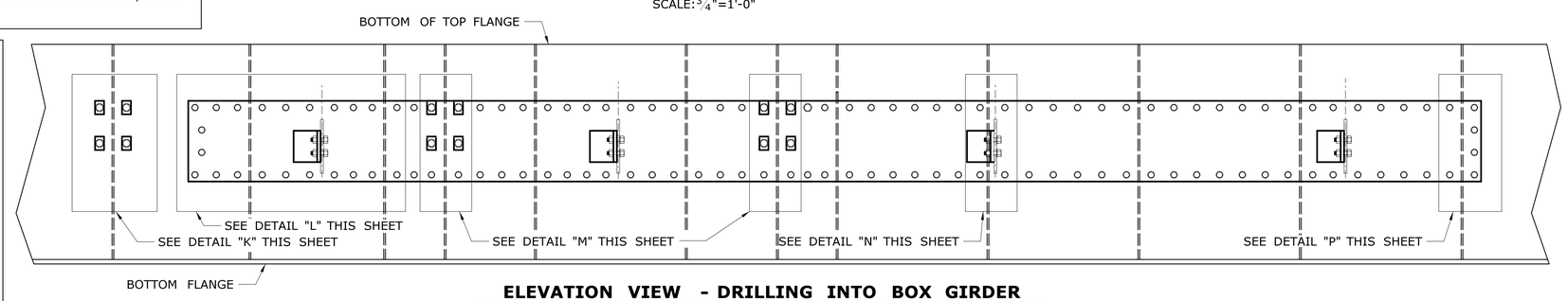

ELEVATION VIEW - DRILLING INTO BOX GIRDER

SCALE: 3/4"=1'-0"

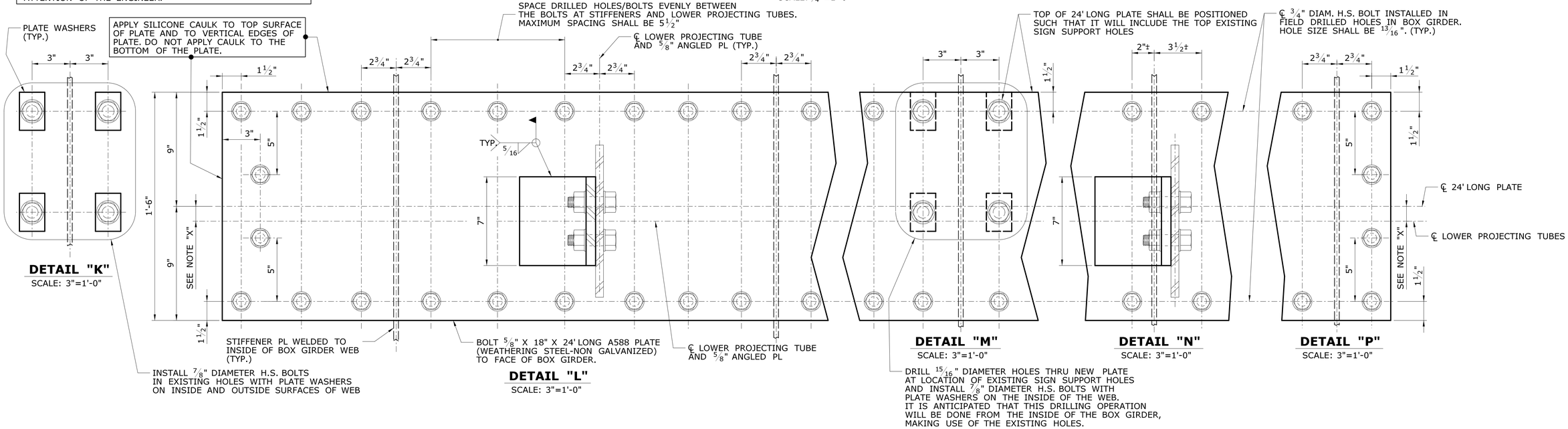

DETAIL "K" SCALE: 3"=1'-0"

DETAIL "L" SCALE: 3"=1'-0"

DETAIL "M" SCALE: 3"=1'-0"

DETAIL "N" SCALE: 3"=1'-0"

DETAIL "P" SCALE: 3"=1'-0"

REV.	DATE	REVISION DESCRIPTION	SHEET NO.

THE INFORMATION, INCLUDING ESTIMATED QUANTITIES OF WORK, SHOWN ON THESE SHEETS IS BASED ON LIMITED INVESTIGATIONS BY THE STATE AND IS IN NO WAY WARRANTED TO INDICATE THE CONDITIONS OF ACTUAL QUANTITIES OF WORK WHICH WILL BE REQUIRED.

Plotted Date: 6/16/2015

DESIGNER/DRAFTER: RDD
CHECKED BY: JK
SCALE AS NOTED

STATE OF CONNECTICUT
DEPARTMENT OF TRANSPORTATION

Filename: ...\SB_14_Structure Mounted Sign Support - 11.dgn

SIGNATURE/BLOCK: OFFICE OF ENGINEERING
APPROVED BY:

PROJECT TITLE: REPLACEMENT OF OVERHEAD SIGN SUPPORTS ON VARIOUS ROUTES STATEWIDE

TOWN: EAST HARTFORD

DRAWING TITLE: BOLTED PLATE DETAILS

PROJECT NO. 170-3303
DRAWING NO. S-14
SHEET NO. 05.014

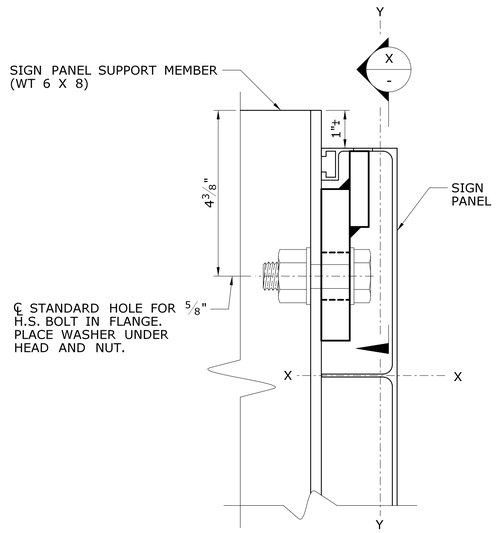

DETAIL G
SCALE: 6" = 1'-0"

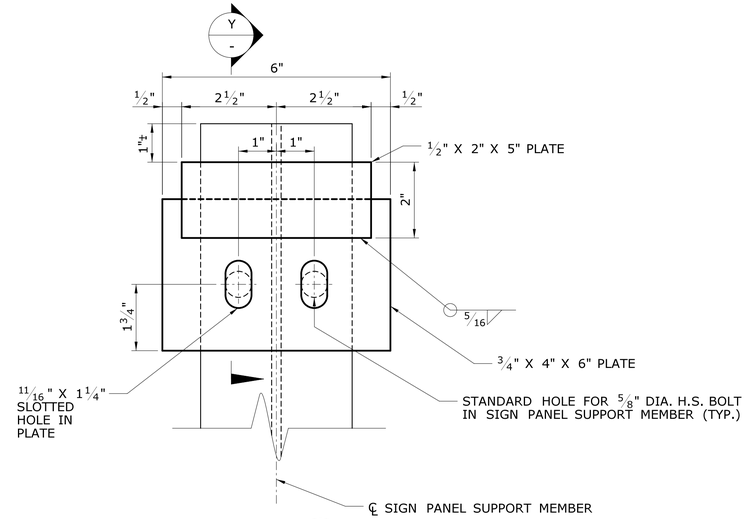

SECTION X
SCALE: 6" = 1'-0"

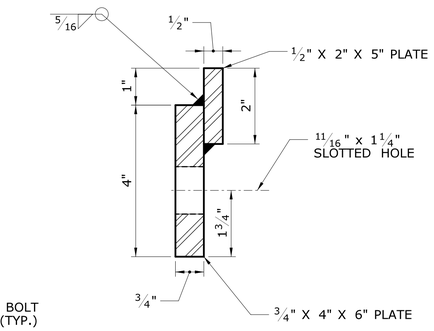

SECTION Y
SCALE: 6" = 1'-0"

TYPICAL SIGN PANEL HOOK DETAILS

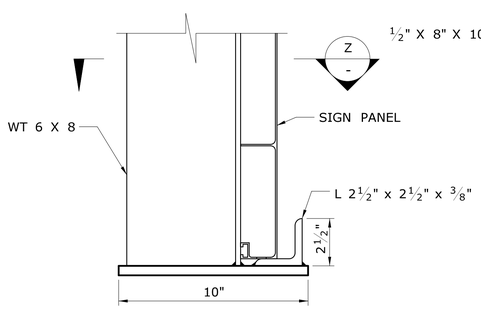

DETAIL H
SCALE: 3" = 1'-0"

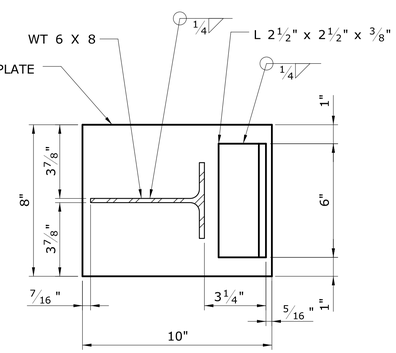

SECTION Z
SCALE: 3" = 1'-0"

TYPICAL SIGN STOP DETAILS

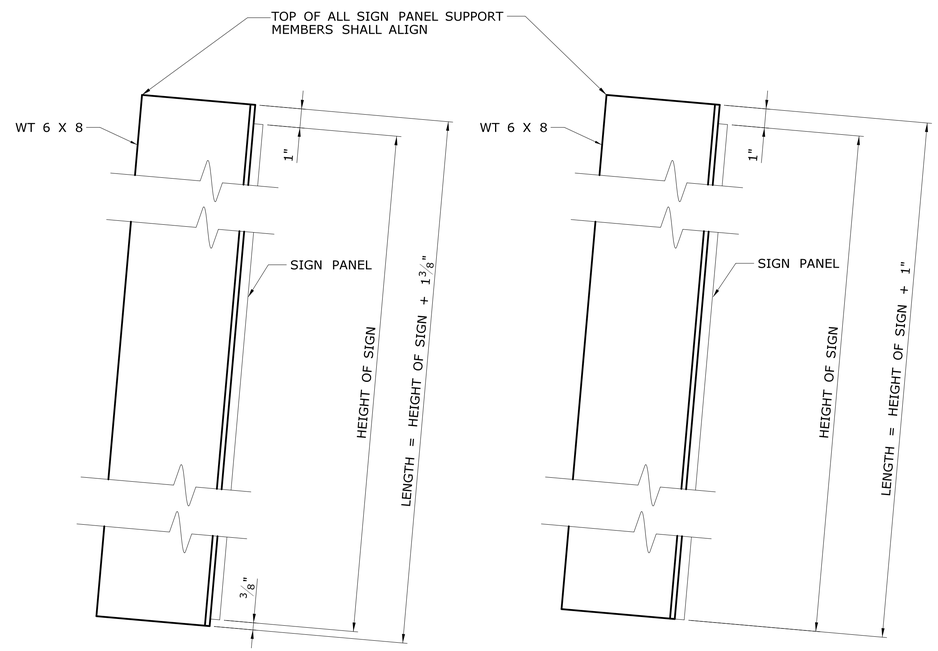

WITH SIGN STOP **NO SIGN STOP**

LENGTH OF SIGN PANEL SUPPORT MEMBERS

NTS

REV.	DATE	REVISION DESCRIPTION	SHEET NO.

THE INFORMATION, INCLUDING ESTIMATED QUANTITIES OF WORK, SHOWN ON THESE SHEETS IS BASED ON LIMITED INVESTIGATIONS BY THE STATE AND IS IN NO WAY WARRANTED TO INDICATE THE CONDITIONS OF ACTUAL QUANTITIES OF WORK WHICH WILL BE REQUIRED.

Plotted Date: 6/16/2015

DESIGNER/DRAFTER: RDD
CHECKED BY: JK
SCALE AS NOTED

STATE OF CONNECTICUT
DEPARTMENT OF TRANSPORTATION

Filename: ...\SB_15_0170_3303_VAMS Simmons Road.dgn

SIGNATURE/BLOCK: OFFICE OF ENGINEERING
APPROVED BY:

PROJECT TITLE: REPLACEMENT OF OVERHEAD SIGN SUPPORTS ON VARIOUS ROUTES STATEWIDE

TOWN: EAST HARTFORD

DRAWING TITLE: SIGN PANEL SUPPORT MEMBERS

PROJECT NO. 170-3303
DRAWING NO. S-15
SHEET NO. 05.015

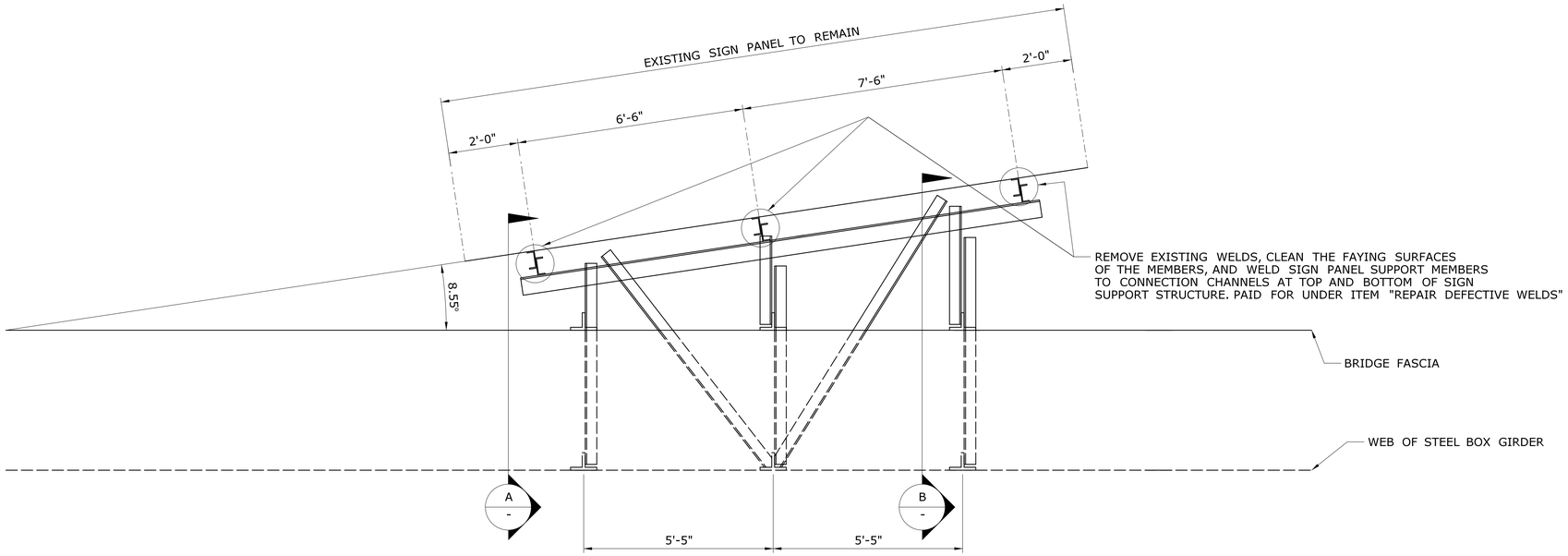

PLAN
SIGN SUPPORT 21613D
SCALE: ½" = 1'-0"

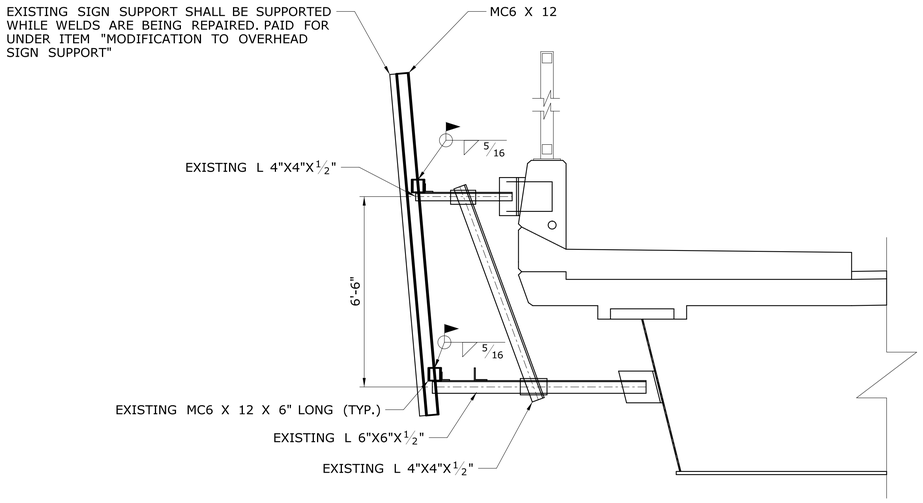

SECTION A
SCALE: ½" = 1'-0"

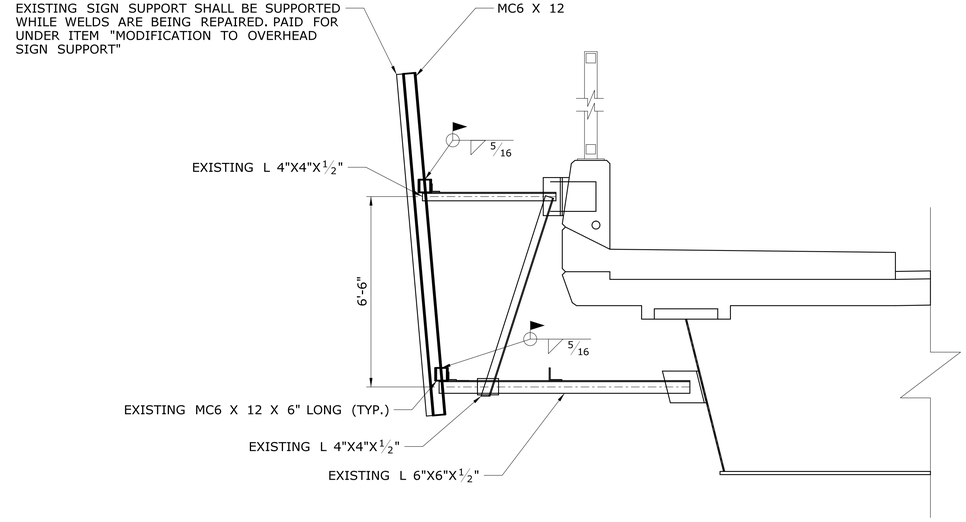

SECTION B
SCALE: ½" = 1'-0"

REV.	DATE	REVISION DESCRIPTION	SHEET NO.

THE INFORMATION, INCLUDING ESTIMATED QUANTITIES OF WORK, SHOWN ON THESE SHEETS IS BASED ON LIMITED INVESTIGATIONS BY THE STATE AND IS IN NO WAY WARRANTED TO INDICATE THE CONDITIONS OF ACTUAL QUANTITIES OF WORK WHICH WILL BE REQUIRED.

Plotted Date: 6/16/2015

DESIGNER/DRAFTER: JK
CHECKED BY: RDD
SCALE AS NOTED

STATE OF CONNECTICUT
DEPARTMENT OF TRANSPORTATION

Filename: ...\SB_16_Existing Bridge Mount.dgn

SIGNATURE/BLOCK: OFFICE OF ENGINEERING
APPROVED BY:

PROJECT TITLE: REPLACEMENT OF OVERHEAD SIGN SUPPORTS ON VARIOUS ROUTES STATEWIDE

TOWN: EAST HARTFORD

DRAWING TITLE: DEFECTIVE WELDS REPAIR

PROJECT NO. 170-3303
DRAWING NO. S-16
SHEET NO. 05.016