CONNECTICUT DEPARTMENT OF TRANSPORTATION

Plans For

REPLACEMENT OF OVERHEAD SIGN SUPPORTS ON VARIOUS ROUTES STATEWIDE

Town(s)/City of

NEWTOWN, CHESHIRE, MERIDEN, NEW BRITAIN, ROCKY HILL, HARTFORD, WINDSOR, EAST HARTFORD, EAST WINDSOR, GLASTONBURY, WINDHAM, NORWICH

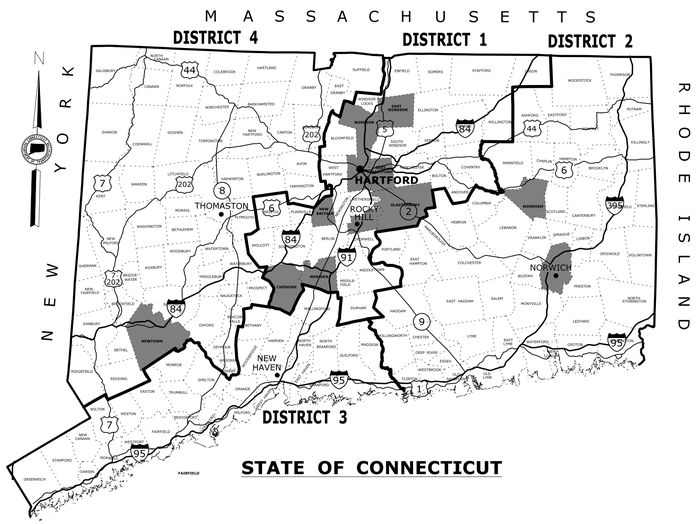

STATE OF CONNECTICUT

GENERAL NOTES:

1. FEDERAL AID PROJECT NO. 000R(903)
2. CONSTRUCTION SPECIFICATIONS:
   Connecticut Department of Transportation, Standard Specifications for Roads, Bridges and Incidental Construction, Form 816, dated 2004; Supplemental Specifications, dated January, 2015; and Special Provisions

F.A.P. #	MAINTENANCE RESPONSIBILITY	PROJECT #
000R(903)	STATE OF CONNECTICUT	170-3303

DISCLAIMER

IT IS THE RESPONSIBILITY OF EACH BIDDER AND ALL OTHER INTERESTED PARTIES TO OBTAIN ALL BIDDING RELATED INFORMATION AND DOCUMENTS FROM OFFICAL SOURCES WITHIN THE DEPARTMENT.

PERSONS AND/OR ENTITIES WHICH REPRODUCE AND/OR MAKE SUCH INFORMATION AVAILABLE BY ANY MEANS ARE NOT AUTHORIZED BY THE DEPARTMENT TO DO SO AND MAY BE LIABLE FOR CLAIMS RESULTING FROM THE DISSEMINATION OF UNOFFICAL, INCOMPLETE AND/OR INACCURATE INFORMATION.

CONSTRUCTION NOTES

1. THE RELATIVE LOCATION OF EACH SIGN ON OVERHEAD STRUCTURE IS SHOWN READING ALPHABETICALLY FROM LEFT TO RIGHT AS VIEWED BY TRAFFIC.
2. ALL SIGN FOUNDATIONS SHALL BE FIELD STAKED AND THE LOCATIONS APPROVED BY AN ENGINEER FROM THE DIVISION OF TRAFFIC ENGINEERING BEFORE CONCRETE IS POURED.
3. THE REMOVAL AND OR RELOCATION OF EXISTING SHEET ALUMINUM SIGNS AND POSTS WILL BE PAID FOR UNDER ITEM #1206023A "REMOVAL AND RELOCATION OF EXISTING SIGNS."
4. THE REMOVAL AND OR RELOCATION/REINSTALLATION OF EXISTING OVERHEAD SIGNS WILL BE PAID FOR UNDER ITEM #1206025A "REMOVAL AND RELOCATION OF EXISTING OVERHEAD SIGNS."
5. THE CONTRACTOR SHALL CLEAR AND TRIM AS DIRECTED BY THE ENGINEER TO PROVIDE ADEQUATE SIGHTLINE TO THE SIGNS. THIS WORK SHALL BE PAID FOR UNDER ITEM #0952001A SELECTIVE CLEARING AND THINNING.
6. WHEN A SIGN IS TO BE REPLACED THE EXISTING SIGN IS NOT TO BE REMOVED UNTIL THE REPLACEMENT SIGN IS INSTALLED.

LIST OF SUBSETS

SUBSET NO.	SUBSET TITLE	*SUBSET SHEET COUNT
01	GENERAL	4
02	REVISIONS	1
03	TRAFFIC	21
04	HIGHWAYS	7
05	STRUCTURE MOUNTED SIGN SUPPORT	16
06	SIGN SUPPORT REPAIRS	5
07	DESIGN BUILD SIGN SUPPORTS	10
08	BREAKAWAY SIGN SUPPORTS	7
09	EXTRUDED ALUMINUM SIGN PANEL DETAILS	3
10	STRUCTURES - FOR INFORMATION ONLY	26
	HIGHWAY STANDARD SHEETS	11
	TRAFFIC STANDARD SHEETS	6

*THE INITIAL SUBSET SHEET COUNT DOES NOT INCLUDE ADDENDUMS AND CHANGE ORDERS

LIST OF DRAWINGS SUBSET 01 - GENERAL

DRAWING TITLE	DRAWING NO.
TITLE SHEET	G-1
DETAILED ESTIMATE SHEET	EST-1
MISCELLANEOUS DETAILS	MDS-1
MISCELLANEOUS DETAILS	MDS-2

STANDARD CONVENTIONS

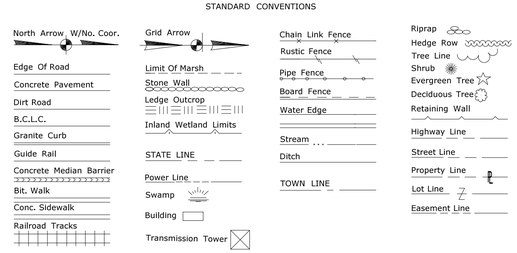

THE DESIGN APPEARS TO CONFORM TO APPLICABLE CRITERIA. APPROVAL IS NOT TO BE CONSTRUED TO MEAN THAT ALL ASPECTS OF THE DESIGN HAVE BEEN PERSONALLY CHECKED BY THE UNDERSIGNED.

Mark F. Makuch, P.E.
2015.07.15 14:51:28-04'00'

SUBMITTED BY: TRANSPORTATION PRINCIPAL ENGINEER - MARK F. MAKUCH P.E.

Charles S. Harlow, P.E.
2015.07.17 11:09:57-04'00'

APPROVAL RECOMMENDED BY: MANAGER OF TRAFFIC ENGINEERING - CHARLES S. HARLOW P.E.

Theodore H. Nezames, P.E.
2015.07.17 11:38:42-04'00'

APPROVED BY: TRANSPORTATION ENGINEERING ADMINISTRATOR - SCOTT A. HILL P.E.

Plans For

REPLACEMENT OF OVERHEAD SIGN SUPPORTS ON VARIOUS ROUTES STATEWIDE

Town(s)/City

NEWTOWN, CHESHIRE, MERIDEN, NEW BRITAIN, ROCKY HILL, HARTFORD, WINDSOR, EAST HARTFORD, EAST WINDSOR, GLASTONBURY, WINDHAM, NORWICH

STATE PROJECT NO. **170-3303**

DRAWING NO. **G-1**

SHEET NO. **01.01**

Connecticut Department of Transportation
QA/QC Format Check

GENERAL ITEMS & TRAFFIC ENGINEERING ITEMS

PROJECT NO. 170-3066	0020801A ASBESTOS ABATEMENT L.S.	0020903A LEAD COMPLIANCE FOR MISCELLANEOUS EXTERIOR TASKS L.S.	0603802 STRUCTURAL STEEL - SIGN SUPPORTS CWT.	0952001A SELECTIVE CLEARING AND THINNING L.S.	0969060A CONSTRUCTION FIELD OFFICE, SMALL MO.	0970007A TRAFFIC PERSON (UNIFORMED FLAGGER) HR.	0971001A MAINTENANCE AND PROTECTION OF TRAFFIC L.S.	0975004 MOBILIZATION AND PROJECT CLOSEOUT L.S.	0976002 BARRICADE WARNING LIGHTS - HIGH INTENSITY DAY	0978002 TRAFFIC DRUM EA.	0979003 CONSTRUCTION BARRICADE TYPE III EA.	0980001 CONSTRUCTION STAKING L.S.	0981100 42" TRAFFIC CONE EA.	1130000 HIGH MOUNTED INTERNALLY ILLUMINATED FLASHING ARROW DAY	1131002A REMOTE CONTROL CHANGEABLE MESSAGE SIGN DAY	1203109 SIDE MOUNTED SIGN FOUNDATION EA.	1205207 TYPE DE-7 DELINEATOR EA.	1206023A REMOVAL AND RELOCTION OF OF EXISTING SIGNS L.S.	1206025A REMOVAL AND RELOCATION OF TYPICAL OVERHEAD SIGNS L.S.	1207034A SIGN FACE - EXTRUDED ALUMINUM (TYPE IV RETROREFLECTIVE SHEETING) S.F.	1208929 SIGN FACE - SHEET ALUMINUM (TYPE IV REFLECTIVE SHEETING) S.F.	1220027 CONSTRUCTION SIGNS S.F.	1806200 FURNISHING AND USE OF PORTABLE IMPACT ATTENUATION SYSTEM TYPE D HR.
P SITE 1																				425			
P SITE 2																				168			
P SITE 3																				360			
P SITE 4																				520			
P SITE 5																				915			
P SITE 6																				212			
P SITE 7																				369			
P SITE 8																				164			
P SITE 9											12						15			225	28	600	
P SITE 10																				245	20		
P SITE 11																				114			
P SITE 12			19													2				205			
P SITE 13			12													2				686	7		
SUBTOTAL	L.S.	L.S.	31	L.S.	0	0	L.S.	L.S.	0	0	12	L.S.	0	0	0	4	15	L.S.	L.S.	4608	55	600	0
UNASSIGNED	L.S.	L.S.	0	L.S.	20	40	L.S.	L.S.	400	120	0	L.S.	100	40	40	0	0	L.S.	L.S.	0	0	500	400
TOTAL	L.S.	L.S.	31	L.S.	20	40	L.S.	L.S.	400	120	12	L.S.	100	40	40	4	15	L.S.	L.S.	4608	55	1100	400

STRUCTURE ITEMS

PROJECT NO. 170-3066	0101002A CONFINED SPACE HEALTH AND SAFETY L.S.	0601201 CLASS "F" CONCRETE C.Y.	0602030 DEFORMED STEEL BARS - GALVANIZED LB.	0602910A DRILLING HOLES AND GROUTING DOWELS EA.	0603050A REPAIR DEFECTIVE WELDS L.F.	0603768A STRUCTURAL STEEL LB.	0974020A REMOVAL OF EXISTING MASONRY (PARAPET) C.F.	1201801A MONTUBE BRIDGE SIGN STRUCTURE EA.	1201804A 4 CHORD TRUSS CANTILIVER SIGN STRUCTURE EA.	1202999A DRILLED SHAFT TRAFFIC STRUCTURE FOUNDATION EA.	1203253A MODIFICATION TO OVERHEAD SIGN SUPPORT L.S.	1203902A STRUCTURE MOUNTED SIGN SUPPORT EA.
P SITE 1									2	2		
P SITE 2						970						
P SITE 3								1		2		
P SITE 4								1		2		
P SITE 5						1920		1		2		
P SITE 6									1	1		
P SITE 7								1		2		
P SITE 8									1	1		
P SITE 9	L.S.	3	500	9	15		63				L.S.	1
P SITE 10									1	1		
P SITE 11									1	1		
P SITE 12												
P SITE 13								1		2		
SUBTOTAL	L.S.	3	500	9	15	2890	63	5	6	16	L.S.	1
UNASSIGNED	0	0	0	0	0	10	0	0	0	0	0	0
TOTAL	L.S.	3	500	9	15	2900	63	5	6	16	L.S.	1

HIGHWAY ITEMS

PROJECT NO. 170-3066	0822001 TEMPORARY PRECAST CONCRETE BARRIER CURB L.F.	0910213 METAL BEAM RAIL (MODIFIED TYPE R-1 SYSTEM 2) - 10 GA. L.F.	0910232 METAL BEAM RAIL (MODIFIED TYPE R-1 SYSTEM 3) - 10 GA. L.F.	0911122 R-1 END ANCHORAGE TYPE I - 10 GA. EA.	0912509 REMOVE THREE CABLE GUIDE RAILING L.F.	0912532 REMOVAL METAL BEAM RAIL (TYPE R-1) L.F.	0913952A PROCTIVE FENCE (5' HIGH) L.F.	0918001 THREE-CABLE GUIDE RAILING (1 BEAM POSTS) L.F.	0918011 END ANCHORAGE - TYPE I EA.	1801001 REPAIR OF IMPACT ATTENUATION SYSTEM TYPE A MODULE 400 LB. EA.	1801002 REPAIR OF IMPACT ATTENUATION SYSTEM TYPE A MODULE 700 LB. EA.	1801003 REPAIR OF IMPACT ATTENUATION SYSTEM TYPE A MODULE 1400 LB. EA.	1801004 REPAIR OF IMPACT ATTENUATION SYSTEM TYPE A MODULE 2100 LB. EA.	1807011 TEMPORARY IMPACT ATTENUATION SYSTEM TYPE A MODULE 400 LB. EA.	1807012 TEMPORARY IMPACT ATTENUATION SYSTEM TYPE A MODULE 700 LB. EA.	1807013 TEMPORARY IMPACT ATTENUATION SYSTEM TYPE A MODULE 1400 LB. EA.	1807014 TEMPORARY IMPACT ATTENUATION SYSTEM TYPE A MODULE 2100 LB. EA.
P SITE 1		62.5			160	62.5		16	1								
P SITE 2																	
P SITE 3		25	37.5			62.5											
P SITE 4		25	62.5			87.5											
P SITE 5		62.5		1		80											
P SITE 6																	
P SITE 7																	
P SITE 8																	
P SITE 9	240						260			2	6	8	4	2	6	8	4
P SITE 10																	
P SITE 11			25			25											
P SITE 12																	
P SITE 13																	
SUBTOTAL	240	175	125	1	160	318	260	16	1	2	6	8	4	2	6	8	4
UNASSIGNED	0	12.5	12.5	0	16	12.5	0	0	0	0	0	0	0	0	0	0	0
TOTAL	240	188	138	1	176	331	260	16	1	2	6	8	4	2	6	8	4

A = ** See Special Provisions **

REV.	DATE	REVISION DESCRIPTION	SHEET NO.

THE INFORMATION, INCLUDING ESTIMATED QUANTITIES OF WORK, SHOWN ON THESE SHEETS IS BASED ON LIMITED INVESTIGATIONS BY THE STATE AND IS IN NO WAY WARRANTED TO INDICATE THE CONDITIONS OF ACTUAL QUANTITIES OF WORK WHICH WILL BE REQUIRED.

Plotted Date: 6/18/2015

DESIGNER/DRAFTER: JAM

CHECKED BY: PJC

STATE OF CONNECTICUT
DEPARTMENT OF TRANSPORTATION

Filename: ...\TR_MSH_0170_3303_EST.dgn

SIGNATURE/BLOCK: OFFICE OF ENGINEERING

APPROVED BY: Mark Makuch

PROJECT TITLE: REPLACEMENT OF OVERHEAD SIGN SUPPORTS ON VARIOUS ROUTES STATEWIDE

TOWN: VARIOUS

DRAWING TITLE: DETAILED ESTIMATE SHEET

PROJECT NO. 170-3303

DRAWING NO. EST-1

SHEET NO. 01.02

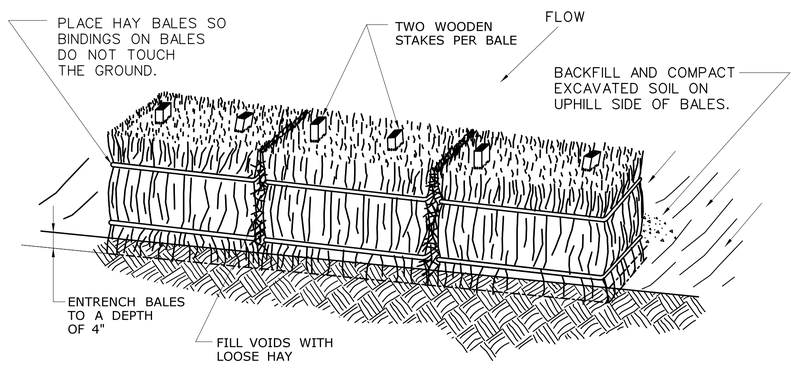

HAY BALE SYSTEM

GENERAL NOTES:

1. HAY BALES SHALL NOT BE USED IN A WATERCOURSE.
2. HAY BALES SHALL BE ENTRENCHED 4" AND TIGHTLY BUTTED TOPGETHER. REMOVE HEAVY BRUSH AND FILL ALL VOIDS WITH LOOSE HAY.
3. WOOD STAKES SHALL HAVE A MINIMUM CROSS-SECTION SIZE OF AT LEAST 1" x 1" AND MINIMUM LENGTH OF 4 FT.
4. CLEAN OUT ACCUMULATED SEDIMENT WHEN ONE-HALF (1/2) OF THE ORIGINAL HEIGHT OF THE HAY BALE FENCE, AS INSTALLED, BECOMES FILLED WITH SEDIMENT OR AS DIRECTED BY THE ENGINEER.
5. NOT TO BE USED IN THE VICINITY OF URBAN AND RESIDENTIAL AREAS.

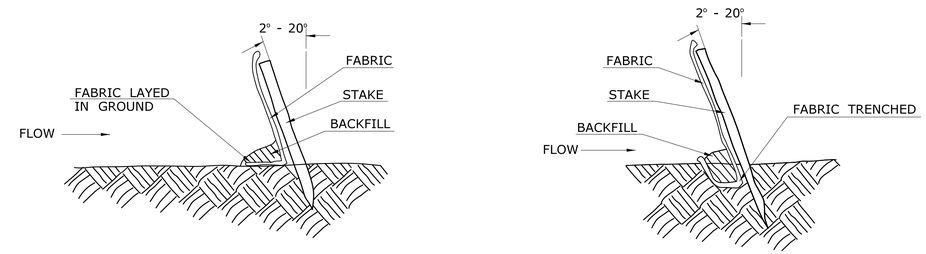

END VIEW

BACKFILLING GEOTEXTILE TOE

TRENCHING GEOTEXTILE TOE

GEOTEXTILE FENCE SYSTEM

GENERAL NOTES:

1. GEOTEXTILE FENCE SHOULD BE PLACED SO THE FENCE LEANS TOWARD THE SOURCE OF SEDIMENT.
2. MAXIMUM SPACING FOR WOODEN STAKES OR STEEL POSTS IS 10.0'.
3. WOOD STAKES SHALL HAVE A MINIMUM CROSS-SECTION SIZE OF 1.5" X 1.5" AND MINIMUM LENGTH OF 4 FT. STEEL POSTS SHALL BE AT LEAST 0.5 LB. PER FOOT WITH A MINIMUM LENGTH OF 4 FT.
4. WOODEN STAKES OR STEEL POSTS SHALL BE DRIVEN TO A MINIMUM OF 1' INTO THE GROUND.
5. 6" OF GEOTEXTILE SHALL BE BURIED BY BACKFILLING OR TRENCHING AND AT LEAST 2.5' IN HEIGHT OF GEOTEXTILE SHALL BE EXPOSED.
6. FABRIC SHALL BE JOINED ONLY AT A SUPPORT POST WITH A MINIMUM OF 6" OVERLAP AND SECURITY SEALED.
7. UPON RE-ESTABLISHMENT OF GROUND COVER IN DISTURBED AREAS AND WHEN DIRECTED BY THE ENGINEER, OR UPON FINAL INSPECTION FENCE AND ANY SEDIMENT SHALL BE REMOVED. AT NO TIME WILL THE FENCE REMAIN IN PLACE AFTER PROJECT COMPLETION.
8. GEOTEXTILE FENCE SHALL NOT BE USED IN A WATER COARSE.
9. ONLY GEOTEXTILE FROM THE DEPARTMENTS APPROVED PRODUCT LIST SHALL BE USED.
10. BACKFILLING OF GEOTEXTILE SHALL ONLY BE USED WHEN GROUND IS FROZEN OR WHERE OTHER OBSTRUCTIONS ARE ENCOUNTERED THAT PROHIBITE TRENCHING, IE, STUMPS OR ROCKS.
11. CLEAN OUT ACCUMULATION SEDIMENT WHEN ONE-HALF (1/2) OF THE ORIGINAL HEIGHT OF THE GEOTEXTILE FENCE, AS INSTALLED , BECOMES FILLED WITH SEDIMENT OR AS DIRECTED BY THE ENGINEER.

NOTE: THIS SHEET INCLUDED AS A GENERAL GUIDE FOR SEDIMENTATION AND EROSION CONTROL MEASURES. THE CONTRACTOR IS TO SUBMIT A PLAN AND FOLLOW THE BEST MANAGEMENT PRACTICES AS SET FORTH IN THE SPECIFICATIONS AND THE 2002 CONNECTICUT EROSION & SEDIMENTATION CONTROL GUIDELINES.

ALL SEDIMENTATION AND EROSION CONTROL AND RESTORATION OF SURROUNDING AREAS INCLUDING SEEDING IS CONSIDERED INCIDENTAL TO THE INSTALLATION OF SIGNS AND RELATED WORK AND IS INCLUDED IN THE GENERAL COST OF THE WORK.

REVISED: 12/10/07

REV.	DATE	REVISION DESCRIPTION	SHEET NO.

THE INFORMATION, INCLUDING ESTIMATED QUANTITIES OF WORK, SHOWN ON THESE SHEETS IS BASED ON LIMITED INVESTIGATIONS BY THE STATE AND IS IN NO WAY WARRANTED TO INDICATE THE CONDITIONS OF ACTUAL QUANTITIES OF WORK WHICH WILL BE REQUIRED.

Plotted Date: 6/18/2015

DESIGNER/DRAFTER: JAM
CHECKED BY: PJC
NTS

STATE OF CONNECTICUT
DEPARTMENT OF TRANSPORTATION

Filename: ...\TR_MSH_0170_3303_MDS-01.dgn

SIGNATURE/BLOCK: OFFICE OF ENGINEERING
APPROVED BY: Mark Mahuch

PROJECT TITLE: REPLACEMENT OF OVERHEAD SIGN SUPPORTS ON VARIOUS ROUTES STATEWIDE

TOWN: VARIOUS

DRAWING TITLE: MISCELLANEOUS CONNECTICUT DETAIL SEDIMENTATION CONTROL SYSTEM

PROJECT NO. 170-3303
DRAWING NO. MDS-1
SHEET NO. 01.03

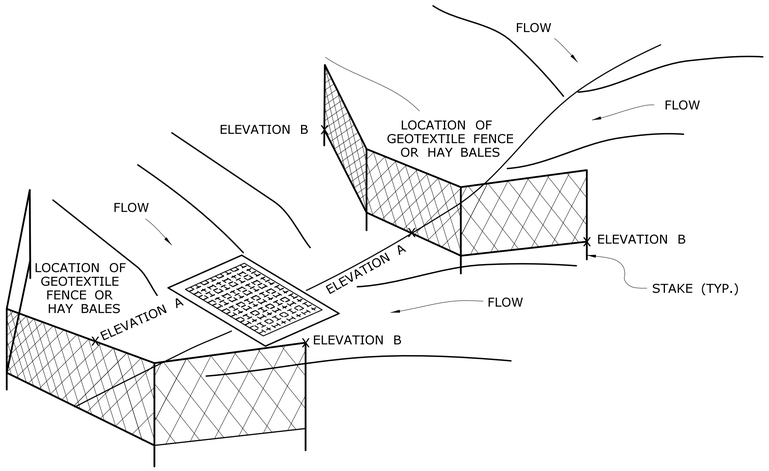

TREATMENT FOR A CATCH BASIN ON A SLOPE

(SEE NOTE 4)

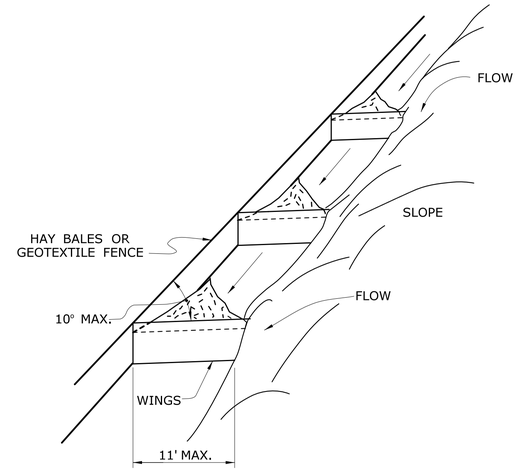

TREATMENT AT TOE OF SLOPE

(SEE NOTE 3)

GENERAL NOTES:

1. THE CONTRACTOR SHALL MAINTAIN THE EARTHEN BERM AS DIRECTED BY THE ENGINEER.
2. WHEN USING A SEDIMENTATION CONTROL SYSTEM ALONG THE TOE OF SLOPE, ADD WINGS TO PREVENT SEDIMENT FROM MOVING ALONG THE FENCE AND OFF THE SITE. MINIMUM SPACING FOR WINGS IS 25'.
3. CATCH BASIN ON SLOPE SHOULD NOT BE RINGED. THE SPACING OF SEDIMENTATION CONTROL SYSTEM SHALL VARY WITH SLOPE.
4. ELEVATION B = A + 12" MIN.

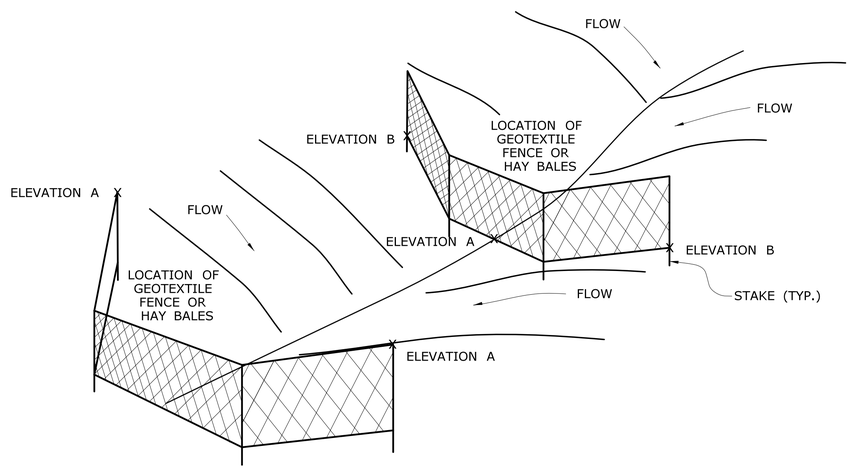

CHECK DAM

(SEE NOTE 4)

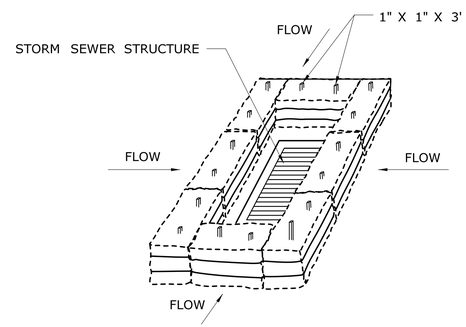

HAY BALE AT CATCH BASIN

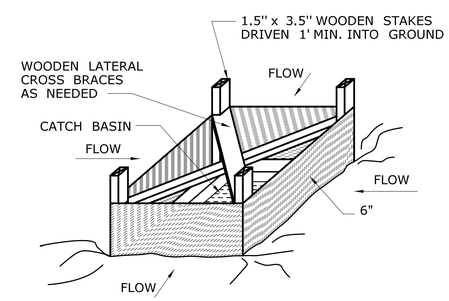

GEOTEXTILE FENCE AT CATCH BASIN

TREATMENT FOR A CATCH BASIN IN A DEPRESSION

NOTE: THIS SHEET INCLUDED AS A GENERAL GUIDE FOR SEDIMENTATION AND EROSION CONTROL MEASURES. THE CONTRACTOR IS TO SUBMIT A PLAN AND FOLLOW THE BEST MANAGEMENT PRACTICES AS SET FORTH IN THE SPECIFICATIONS AND THE 2002 CONNECTICUT EROSION & SEDIMENTATION CONTROL GUIDELINES.

ALL SEDIMENTATION AND EROSION CONTROL AND RESTORATION OF SURROUNDING AREAS INCLUDING SEEDING IS CONSIDERED INCIDENTAL TO THE INSTALLATION OF SIGNS AND RELATED WORK AND IS INCLUDED IN THE GENERAL COST OF THE WORK.

REV.	DATE	REVISION DESCRIPTION	SHEET NO.

THE INFORMATION, INCLUDING ESTIMATED QUANTITIES OF WORK, SHOWN ON THESE SHEETS IS BASED ON LIMITED INVESTIGATIONS BY THE STATE AND IS IN NO WAY WARRANTED TO INDICATE THE CONDITIONS OF ACTUAL QUANTITIES OF WORK WHICH WILL BE REQUIRED.

Plotted Date: 6/18/2015

DESIGNER/DRAFTER: JAM
CHECKED BY: PJC
NTS

STATE OF CONNECTICUT
DEPARTMENT OF TRANSPORTATION

Filename: ..\TR_MSH_0170_3303_MDS-02.dgn

SIGNATURE/BLOCK: OFFICE OF ENGINEERING
APPROVED BY: Mark Makuch

PROJECT TITLE: REPLACEMENT OF OVERHEAD SIGN SUPPORTS ON VARIOUS ROUTES STATEWIDE

TOWN: VARIOUS

DRAWING TITLE: MISCELLANEOUS CONNECTICUT DETAIL SEDIMENTATION CONTROL SYSTEM

PROJECT NO. 170-3303
DRAWING NO. MDS-2
SHEET NO. 01.04