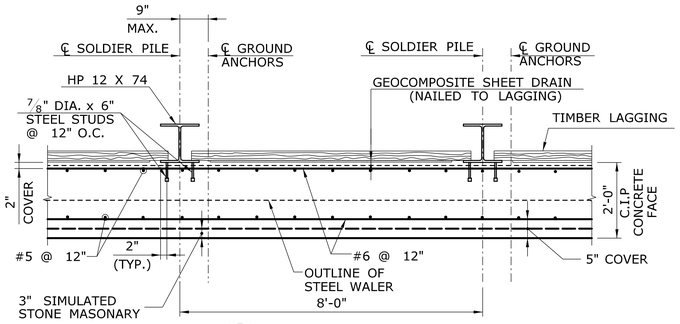

C / - SECTION
SCALE: 1/2" = 1'-0"

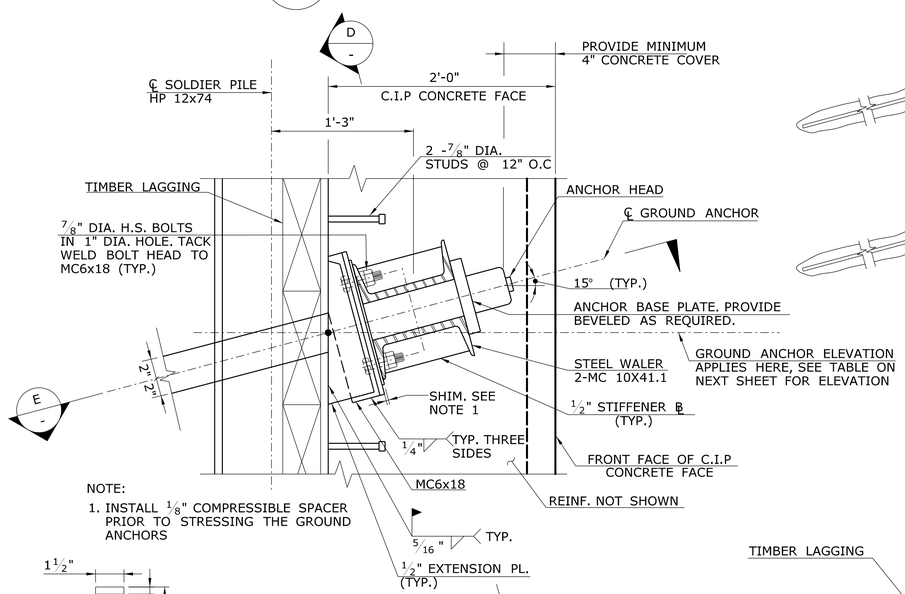

NOTE:
1. INSTALL 1/8" COMPRESSIBLE SPACER PRIOR TO STRESSING THE GROUND ANCHORS

DETAIL A
SCALE: 1 1/2"=1'-0"

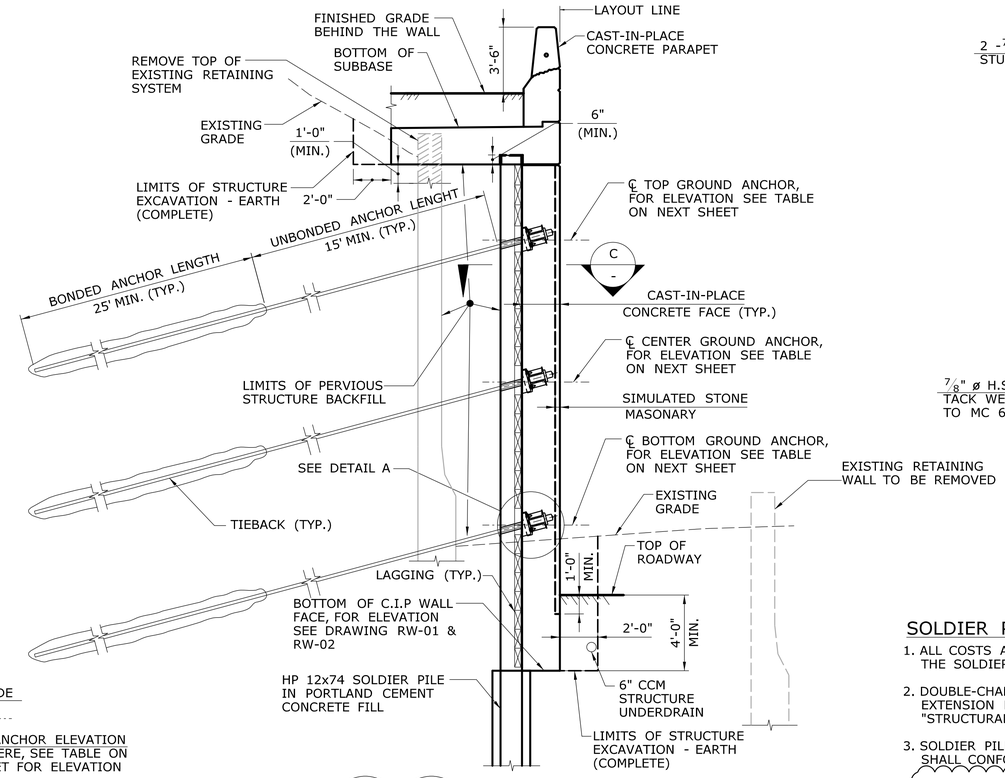

A / RW-01 — A / RW-02 SECTION
SCALE: 1/4" = 1'-0"

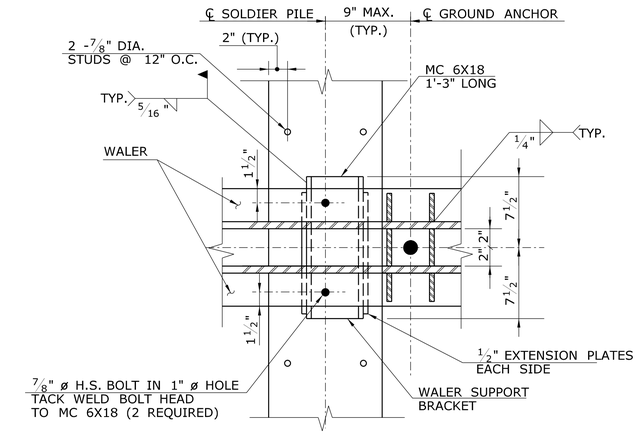

D / - SECTION
SCALE: 1 1/2"=1'-0"

SOLDIER PILE AND STRUCTURAL STEEL NOTES

1. ALL COSTS ASSOCIATED WITH FURNISHING, ERECTING, PLUMBING, AND BRACING THE SOLDIER PILES SHALL BE PAID FOR UNDER THE ITEM "FURNISHING STEEL PILES".
2. DOUBLE-CHANNEL WALERS, STIFFENERS, ANCHOR BASE PLATES, CHANNELS, AND EXTENSION PLATES FOR WALER SUPPORT BRACKETS SHALL BE PAID FOR UNDER THE ITEM "STRUCTURAL STEEL".
3. SOLDIER PILES AND ALL STRUCTURAL STEEL ASSOCIATED WITH WALL CONSTRUCTION SHALL CONFORM TO AASHTO M270, GRADE 50.
4. SOLDIER PILES AND WALER SUPPORT BRACKETS SHALL BE HOT-DIP GALVANIZED IN ACCORDANCE WITH ASTM A123. ~~AFTER WELDED STUDS AND WALER SUPPORT BRACKETS ARE INSTALLED.~~ 1
5. REPAIR DAMAGED GALVANIZATION IN FIELD WITH ZINC-RICH PAINT CONFORMING TO TT-P-641, TYPE 1 TO A DRY THICKNESS OF 3 TO 6 MILS. NO PAYMENT SHALL BE MADE FOR REPAIRING DAMAGED GALVANIZATION.

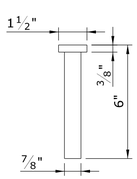

SHEAR STUD DETAIL
SCALE: 3" = 1'-0"

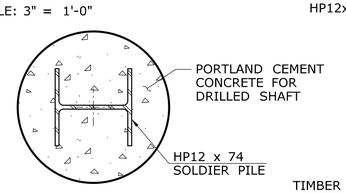

SECTION THRU SOLDIER PILE
SCALE: 1" = 1'-0"

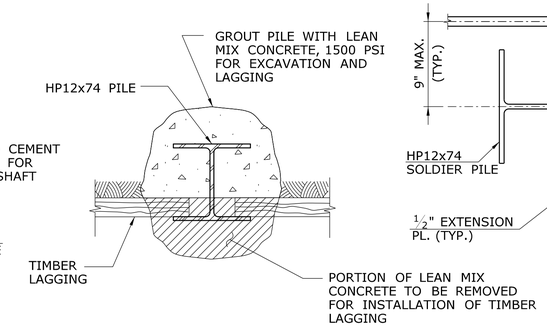

SECTION THRU SOLDIER PILE AND LAGGING
SCALE: 1" = 1'-0"

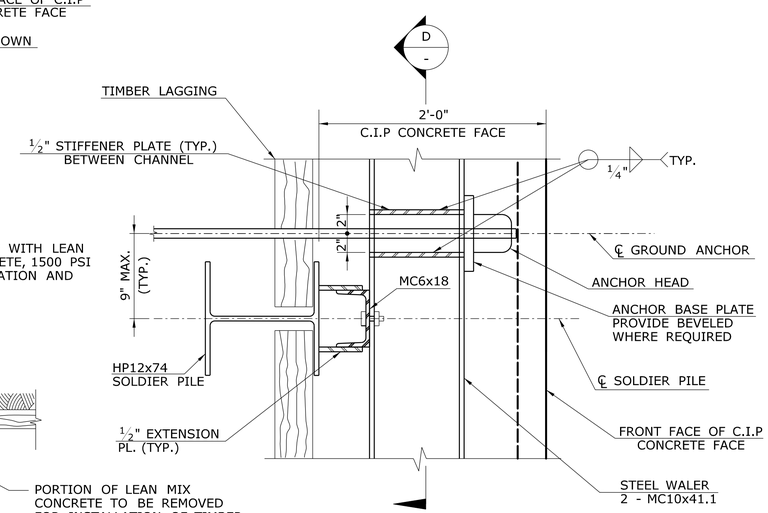

E / - SECTION
SCALE: 1 1/2"=1'-0"

DESIGNED BY:
GM2 ASSOCIATES, INC.
115 GLASTONBURY BLVD.
GLASTONBURY, CT 06033
Madan M Gupta
2015.09.11
14:23:44-04'00'

ADDENDUM NO. 2

REV.	DATE	REVISION DESCRIPTION	SHEET NO.
-	-	-	-
-	-	-	-
-	-	-	-
-	-	-	-
-	-	-	-
1	9/11/15	ADDENDUM NO. 2	-

THE INFORMATION, INCLUDING ESTIMATED QUANTITIES OF WORK, SHOWN ON THESE SHEETS IS BASED ON LIMITED INVESTIGATIONS BY THE STATE AND IS IN NO WAY WARRANTED TO INDICATE THE CONDITIONS OF ACTUAL QUANTITIES OF WORK WHICH WILL BE REQUIRED.

Plotted Date: 9/11/2015

DESIGNER/DRAFTER: YKM
CHECKED BY: VLL
SCALE AS NOTED

STATE OF CONNECTICUT
DEPARTMENT OF TRANSPORTATION

Filename: ...\SB_MSH_135-301_RW103_DET-01_A02.dgn

SIGNATURE/BLOCK: GM2 ASSOCIATES, INC. 115 GLASTONBURY BLVD. GLASTONBURY, CT 06033

PROJECT TITLE: REPLACEMENT OF MNRR BRIDGE OVER ATLANTIC STREET - PHASE 1 I-95 NB EXIT 8 RAMP BRIDGE

TOWN: STAMFORD

DRAWING TITLE: RETAINING WALL 103 WALL DETAILS - 1

PROJECT NO. 135-326
DRAWING NO. RW-05
SHEET NO. 08.005.A2

Connecticut Department of Transportation
QA/QC Format Check