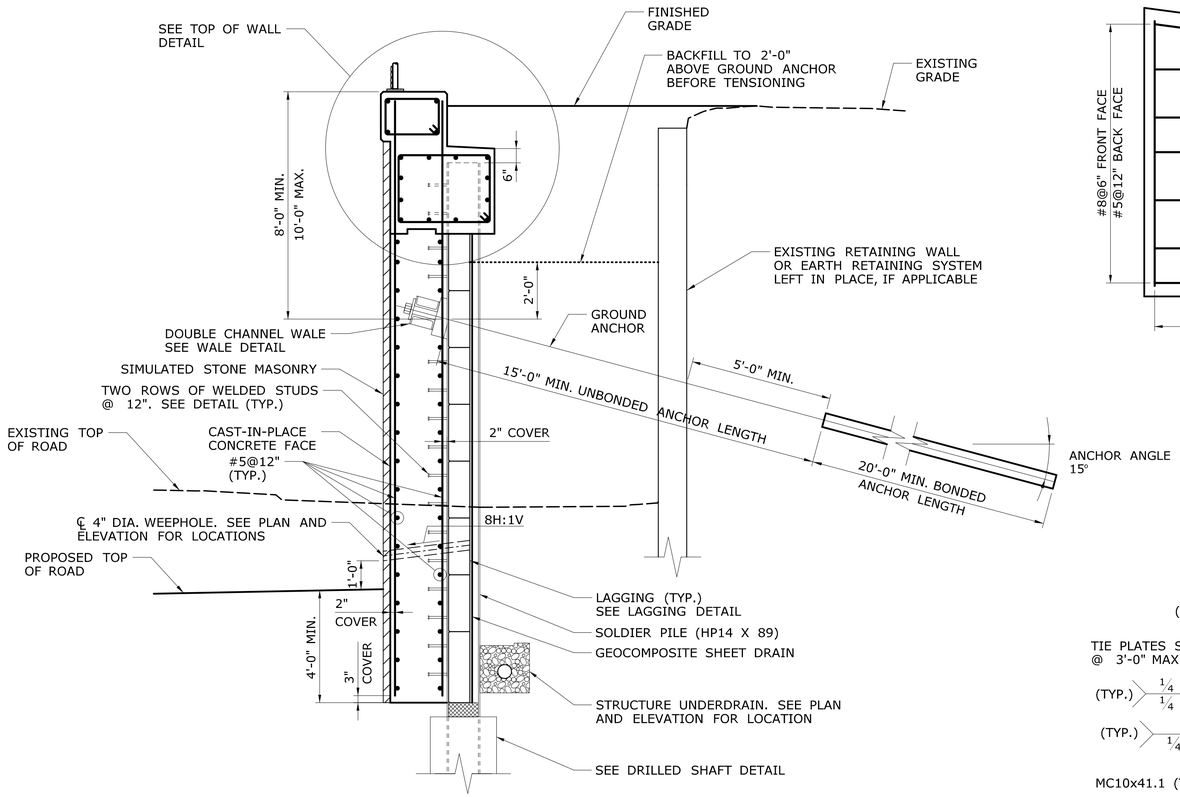

WALL 107 TYPICAL SECTION

SCALE: 3/8" = 1'-0"

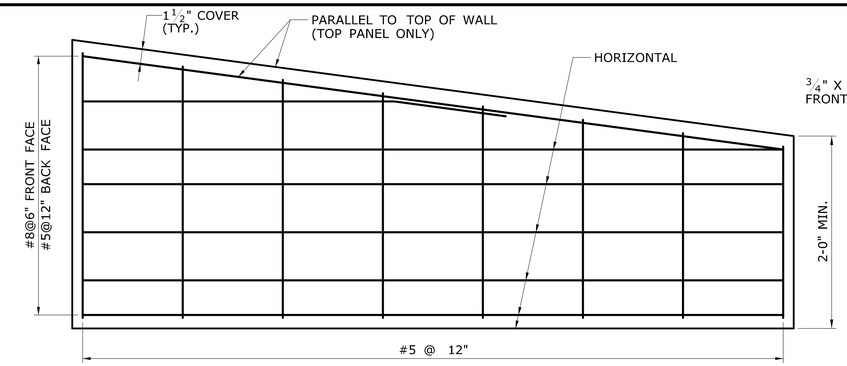

LAGGING ELEVATION

N.T.S.

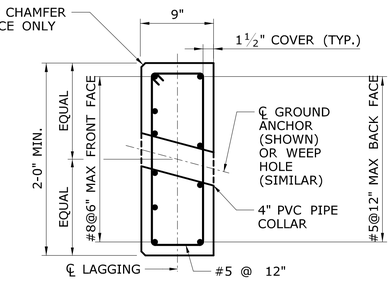

LAGGING DETAIL

N.T.S.

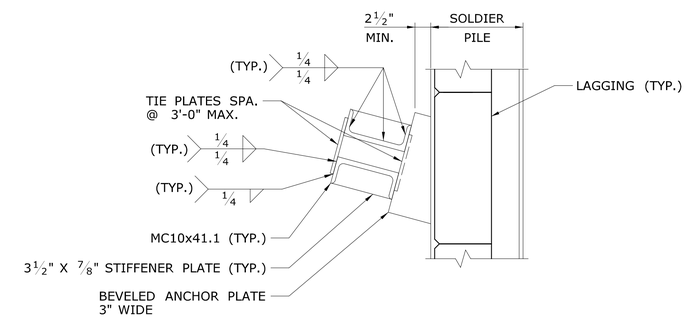

WALE DETAIL AT SOLDIER PILE

N.T.S.

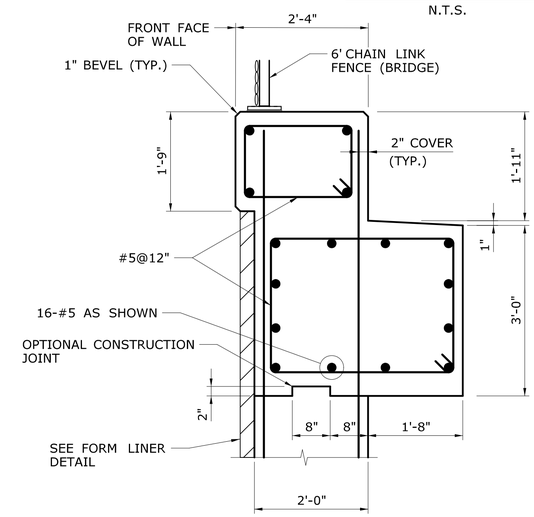

TOP OF WALL DETAIL

SCALE: ¾" = 1'-0"

DESIGNED BY:

AECOM
500 ENTERPRISE DRIVE
ROCKY HILL, CT 06067

STATE OF CONNECTICUT — RONALD G. SACCHI — No. 18588 — LICENSED PROFESSIONAL ENGINEER

Ronald Sacchi
2015.09.14
15:47:21
-04'00'

SOLDIER PILE AND STRUCTURAL STEEL NOTES

1. ALL COSTS ASSOCIATED WITH FURNISHING, ERECTING PLUMBING AND BRACING THE SOLDIER PILES SHALL BE PAID FOR UNDER THE ITEM "FURNISHING STEEL PILES".
2. DOUBLE-CHANNEL WALES, STIFFENERS, TIE PLATES, BEARING PLATES AND BENT PLATES SHALL BE PAID FOR UNDER THE ITEM "STRUCTURAL STEEL".
3. SOLDIER PILES AND ALL STRUCTURAL STEEL ASSOCIATED WITH WALL CONSTRUCTION SHALL CONFORM TO AASHTO M270, GRADE 50.
4. SOLDIER PILES AND BENT PLATES SHALL BE HOT-DIP GALVANIZED IN ACCORDANCE WITH ASTM A123.
   1 ~~AFTER WELDED STUDS AND BENT PLATES ARE INSTALLED.~~
5. REPAIR DAMAGED GALVANIZATION IN FIELD WITH ZINC-RICH PAINT CONFORMING TO TT-P-641, TYPE 1 TO A DRY THICKNESS OF 3 TO 6 MILS. NO PAYMENT SHALL BE MADE FOR REPAIRING DAMAGED GALVANIZATION.

GROUND ANCHOR NOTES

1. CLASS I CORROSION PROTECTION SHALL BE PROVIDED FOR ALL GROUND ANCHORS. WORKING DRAWINGS OF THE FINAL DETAILS OF THE CLASS I CORROSION PROTECTION SHALL BE SUBMITTED TO THE ENGINEER FOR APPROVAL. SEE "RETAINING WALL 107 / WALL DETAILS - 4" FOR SUGGESTED DETAILS.
2. ANCHOR DETAILS (I.E. BAR DIAMETER, STRESSING LENGTH, BOND LENGTH, HOLE DIAMETER, ETC.) SHALL BE DESIGNED BY THE CONTRACTOR AND SUBMITTED TO THE ENGINEER FOR APPROVAL. THE MINIMUM BOND LENGTH SHALL BE 20 FEET. ALL COSTS SHALL BE INCLUDED IN THE ITEM "GROUND ANCHOR". SEE SPECIAL PROVISION.
3. GROUND ANCHORS SHALL BE DESIGNED FOR A SERVICE LOAD OF 145 KIPS PER ANCHOR.
4. A "PERFORMANCE TEST FOR GROUND ANCHOR" SHALL BE PERFORMED ON THE FIRST THREE PRODUCTION ANCHORS AND ON A MINIMUM OF TEN PERCENT OF THE REMAINING PRODUCTION ANCHORS THEREAFTER, AS DIRECTED BY THE ENGINEER. A "PROOF TEST FOR GROUND ANCHOR" SHALL BE PERFORMED ON ALL ANHCORS THAT ARE NOT PERFORMANCE TESTED.

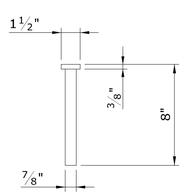

WELDED STUD DETAIL

N.T.S.

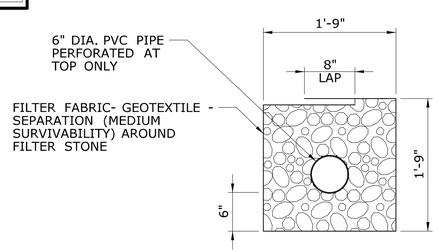

NOTE:
THE COST OF THE FILTER FABRIC, FILTER STONE AND 6" DIA. PVC PIPE TO BE PAID FOR UNDER THE ITEM "6" STRUCTURE UNDERDRAIN."

STRUCTURE UNDERDRAIN DETAIL

N.T.S.

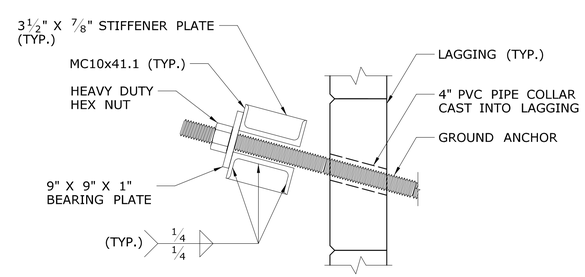

WALE DETAIL AT GROUND ANCHOR

N.T.S.

ADDENDUM NO. 2

REV.	DATE	REVISION DESCRIPTION	SHEET NO.
1	9/11/15	ADDENDUM NO. 2 - REVISED NOTES	

THE INFORMATION, INCLUDING ESTIMATED QUANTITIES OF WORK, SHOWN ON THESE SHEETS IS BASED ON LIMITED INVESTIGATIONS BY THE STATE AND IS IN NO WAY WARRANTED TO INDICATE THE CONDITIONS OF ACTUAL QUANTITIES OF WORK WHICH WILL BE REQUIRED.

Plotted Date: 9/14/2015

DESIGNER/DRAFTER: K. BARKER
CHECKED BY: J. IVES
SCALE AS NOTED

STATE OF CONNECTICUT
DEPARTMENT OF TRANSPORTATION

Filename: ..\SB..MSH..Br08012R..0135..0326..W107-5-1.dgn

SIGNATURE/BLOCK:
STATE OF CONNECTICUT — RONALD G. SACCHI — No. 18588 — LICENSED PROFESSIONAL ENGINEER
AECOM
500 ENTERPRISE DRIVE
ROCKY HILL, CT 06067

PROJECT TITLE:
REPLACEMENT OF MNRR BRIDGE OVER ATLANTIC STREET - PHASE 1
I-95 NB EXIT 8 RAMP BRIDGE

TOWN: **STAMFORD**

DRAWING TITLE: **RETAINING WALL 107 WALL DETAILS - 1**

PROJECT NO. **135-326**
DRAWING NO. **RW-05**
SHEET NO. **10.005.A2**

9/14/2015
P:\Projects\ConnDot\36938292\500 CADD-GIS-Graphics\510 CADD\510.04 Struc.Bridge\MSta.Contract Sheet Files\SB..MSH..Br08012R..0135..0326..W107-5-1.dgn

Border Version: 11/14/08

Connecticut Department of Transportation
QA/QC Format Check

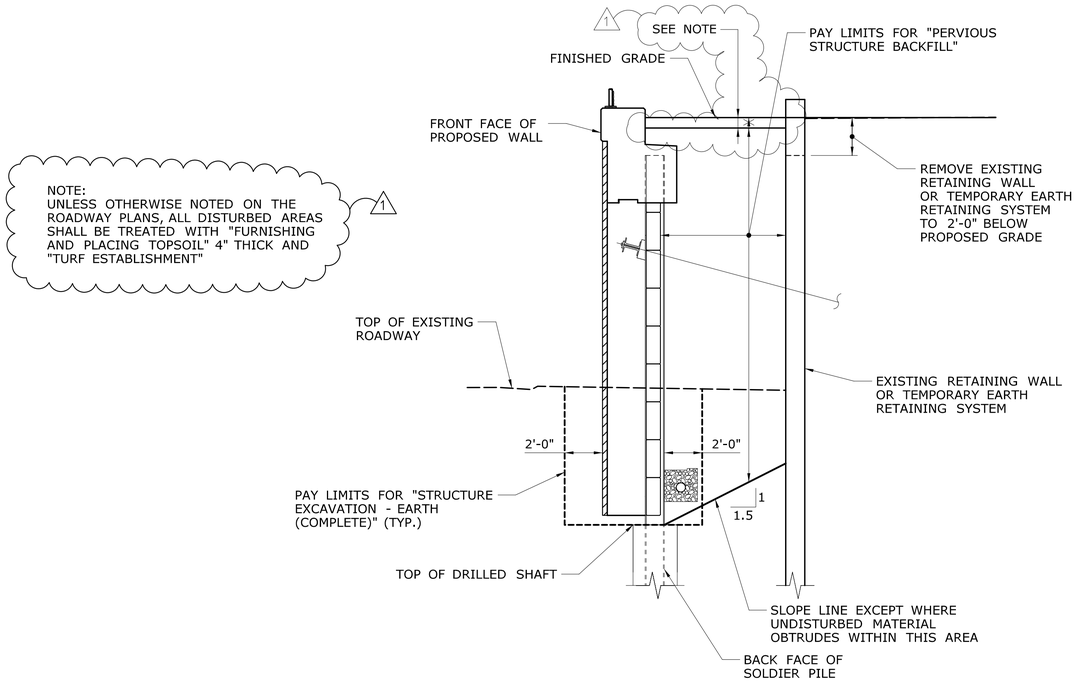

PAY LIMIT DETAIL
N.T.S.

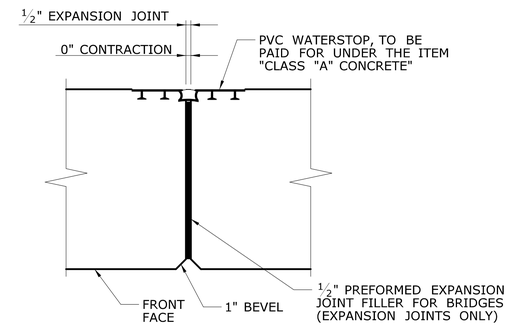

JOINT DETAIL
N.T.S.

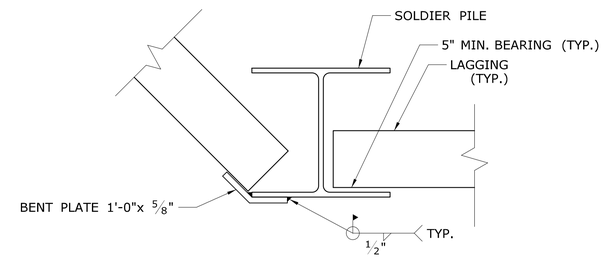

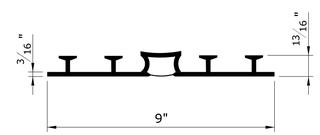

PVC WATERSTOP DETAIL
N.T.S.

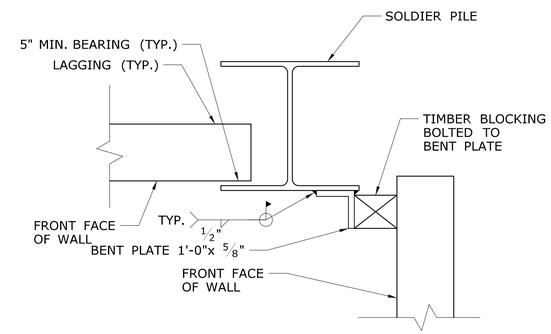

ANGLE POINT DETAILS
SCALE: N.T.S.

ARCHITECTURAL NOTES

1. REFER TO OTHER STRUCTURE DETAILS FOR REINFORCING, DIMENSIONS. ETC.
2. WHERE SHOWN ON THE PLANS, THE CONTRACTOR SHALL UTILIZE CONCRETE FORM LINERS TO SIMULATE STONE MASONRY CONSTRUCTION. THE COST OF THIS WORK SHALL BE INCLUDED IN THE UNIT PRICE FOR "SIMULATED STONE MASONRY".
3. CONCRETE FORM LINERS SHALL CONFORM TO THE REQUIREMENTS OF "SIMULATED STONE MASONRY".
4. THE CONTRACTOR SHALL SUBMIT TO THE ENGINEER FOR APPROVAL LAYOUT DRAWINGS OF ALL FORM LINERS SHOWING STONE SIZES, STONE CONFIGURATIONS, JOINT SPACING, AND ALL DIMENSIONS REQUIRED.
5. IN ADDITION TO THE DETAILS SHOWN ON THESE SHEETS, ALL EXPOSED EDGES SHALL RECEIVE A 1" x 1" BEVEL UNLESS DIMENSIONED OTHERWISE.
6. THE ARCHITECTURAL LINERS SHOWN ARE BASED ON FORM LINERS MANUFACTURED BY CUSTOM ROCK FORMLINER. THE STONE PATTERN IS BASED ON CUSTOM ROCK FORMLINER PATTERN NO. 1502, "ARCH STREET BRIDGE LIMESTONE."

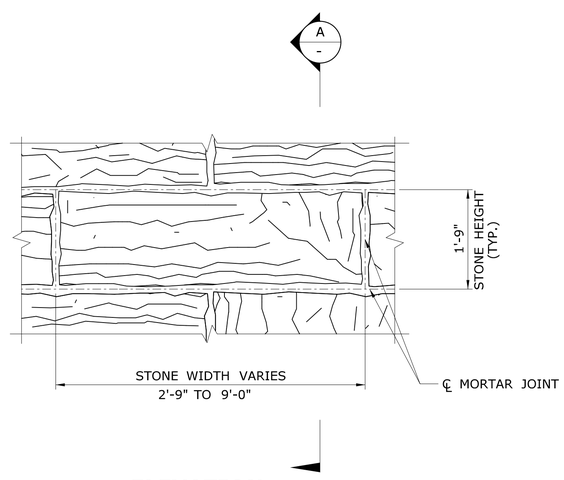

ELEVATION

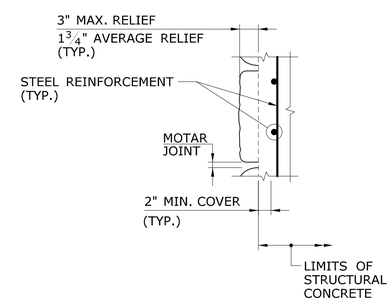

A - SECTION
N.T.S.

FORM LINER DETAIL
SCALE: N.T.S.

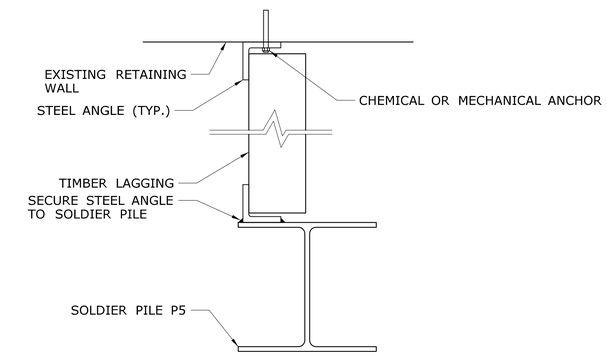

NOTE: CONTRACTOR TO DESIGN CLOSURE BETWEEN EXISTING RETAINING WALL AND PROPOSED RETAINING WALL.

BACKFILL CLOSURE DETAIL
SCALE: 1 1/2" = 1'-0"

ADDENDUM NO. 2

REV.	DATE	REVISION DESCRIPTION	SHEET NO.
1	9/11/15	ADDENDUM NO. 2 - ADDED NOTE	

THE INFORMATION, INCLUDING ESTIMATED QUANTITIES OF WORK, SHOWN ON THESE SHEETS IS BASED ON LIMITED INVESTIGATIONS BY THE STATE AND IS IN NO WAY WARRANTED TO INDICATE THE CONDITIONS OF ACTUAL QUANTITIES OF WORK WHICH WILL BE REQUIRED.

Plotted Date: 9/14/2015

DESIGNER/DRAFTER: K. BARKER
CHECKED BY: J. IVES
SCALE AS NOTED

STATE OF CONNECTICUT
DEPARTMENT OF TRANSPORTATION

Filename: ...\SB_MSH_Br08012R_0135_0326_W107-7-1.dgn

SIGNATURE/BLOCK:
AECOM
500 ENTERPRISE DRIVE
ROCKY HILL, CT 06067

PROJECT TITLE:
REPLACEMENT OF MNRR BRIDGE OVER ATLANTIC STREET - PHASE 1
I-95 NB EXIT 8 RAMP BRIDGE

TOWN: STAMFORD

DRAWING TITLE: RETAINING WALL 107 WALL DETAILS - 3

PROJECT NO. 135-326
DRAWING NO. RW-07
SHEET NO. 10.007.A2

9/14/2015
P:\Projects\ConnDot\36938292\500_CADD-GIS-Graphics\510_CADD\510.04_Struc_Bridge\MSHa_Contract_Sheet_Files\SB_MSH_Br08012R_0135_0326_W107-7-1.dgn

Border Version: 11/14/08