05 - STRUCTURES
INDEX OF DRAWINGS

DRAWING NUMBER	DRAWING TITLE	DRAWING NUMBER	DRAWING TITLE
S-1	DRAWING INDEX		
S-2	MONOTUBE BRIDGE SIGN STRUCTURE		
S-3	MONOTUBE BRIDGE SIGN STRUCTURE DETAILS - 1		
S-4	MONOTUBE BRIDGE SIGN STRUCTURE DETAILS - 2		
S-5	MONOTUBE BRIDGE SIGN STRUCTURE DETAILS - 3		
S-6	DRILLED SHAFT TRAFFIC STRUCTURE FOUNDATION		

THE DESIGN APPEARS TO CONFORM TO APPLICABLE CRITERIA. APPROVAL IS NOT TO BE CONSTRUED TO MEAN THAT ALL ASPECTS OF THE DESIGN HAVE BEEN PERSONALLY CHECKED BY THE UNDERSIGNED.

Rabih M. Barakat P.E.

Digitally signed by Rabih M. Barakat P.E.
DN: CN=Rabih M. Barakat P.E., O=State of Connecticut, E=rabih.barakat@ct.gov, OU=Department of Transportation, OU=Transportation Principal Engineer of Bridge Design, OU=Division of Bridges and Facilities, L=Newington, S=Connecticut, C=US
Date: 2015.06.24 12:58:36-04'00'

TRANSPORTATION PRINCIPAL ENGINEER

REV.	DATE	REVISION DESCRIPTION	SHEET NO.

THE INFORMATION, INCLUDING ESTIMATED QUANTITIES OF WORK, SHOWN ON THESE SHEETS IS BASED ON LIMITED INVESTIGATIONS BY THE STATE AND IS IN NO WAY WARRANTED TO INDICATE THE CONDITIONS OF ACTUAL QUANTITIES OF WORK WHICH WILL BE REQUIRED.

Plotted Date: 5/15/2015

DESIGNER/DRAFTER: ACC

CHECKED BY: JPC

SCALE AS NOTED

STATE OF CONNECTICUT
DEPARTMENT OF TRANSPORTATION

Filename: ...\SB_DrawingIndex.dgn

SIGNATURE/ BLOCK:

OFFICE OF ENGINEERING

APPROVED BY:

PROJECT TITLE:

REPLACEMENT OF HIGHWAY SIGNING ON ROUTE 8

TOWN: THOMASTON, HARWINTON TORRINGTON, WINCHESTER

DRAWING TITLE: DRAWING INDEX

PROJECT NO. 174-381

DRAWING NO. S-1

SHEET NO. 05.01

Connecticut Department of Transportation
QA/QC Format Check

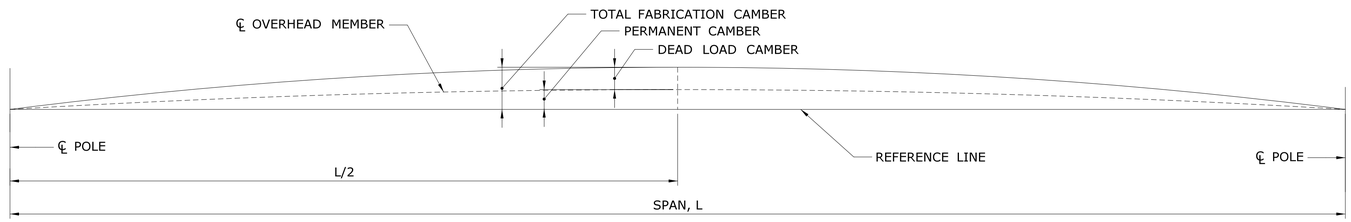

CAMBER DIAGRAM

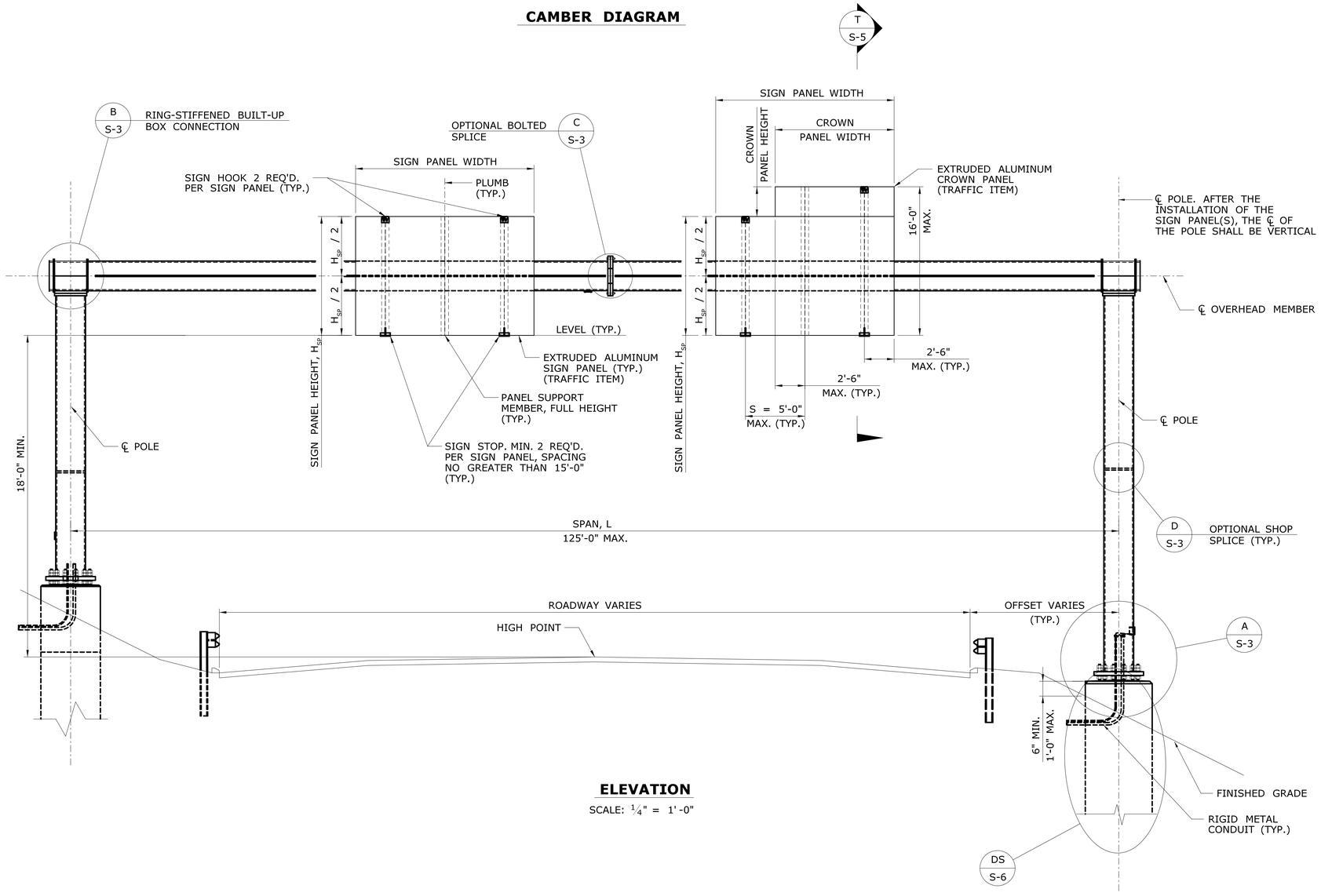

ELEVATION

SCALE: ¼" = 1'-0"

NOTES

THE MONOTUBE BRIDGE SIGN STRUCTURE, INCLUDING THE ANCHORAGE TO THE FOUNDATION AND THE HARDWARE AND STRUCTURAL MEMBERS REQUIRED TO SUPPORT THE TRAFFIC APPURTENENCES, SHALL BE DESIGNED, FABRICATED, ERECTED, ASSEMBLED AND INSTALLED BY THE CONTRACTOR IN ACCORDANCE WITH THE SPECIAL PROVISION "MONOTUBE BRIDGE SIGN STRUCTURE".

THE MONOTUBE BRIDGE SIGN STRUCTURE SHALL BE COMPOSED OF A SINGLE LINEAR TUBULAR HORIZONTAL OVERHEAD SPAN MEMBER SUPPORTED ON EACH END BY A SINGLE LINEAR TUBULAR POLE MEMBER.

THE DETAILS PRESENTED AND REFERRED TO ON THIS SHEET REPRESENT CONCEPTUAL DETAILS OF A SIGN STRUCTURE CONSISTANT WITH THE REQUIREMENTS IN THE SPECIFICATIONS. THE CONTRACTOR IS RESPONSIBLE FOR DETERMINING ALL DETAILS AND DIMENSIONS.

THE APPROXIMATE DIMENSIONS OF THE HORIZONTAL OVERHEAD SPAN MEMBER AND THE POLE HEIGHTS ARE SHOWN IN PLAN AND ELEVATION ON THE TRAFFIC SHEETS. THE ACTUAL SIGN STRUCTURE DIMENSIONS SHALL BE DETERMINED BY THE CONTRACTOR BASED ON A THE HORIZONTAL AND VERTICAL CLEARANCES SHOWN ON THE TRAFFIC SHEETS, A FIELD SURVEY OF THE FINISHED GRADE AT THE SITE, THE ELEVATION OF THE TOP OF THE FINISHED FOUNDATION, THE LOCATIONS OF OVERHEAD AND SUBSURFACE UTILITIES, THE LOCATION OF THE DRAINAGE FACILITIES AND NOISE BARRIER WALL LOCATIONS.

THE SIGN PANELS, INCLUDING CROWN PANELS AS APPLICABLE, SHALL BE LOCATED ON THE HORIZONTAL OVERHEAD SPAN MEMBER BASED ON THE DIMENSIONS SHOWN ON THE TRAFFIC SHEETS AND THE ACTUAL SIGN STRUCTURE DIMENSIONS. THE SIGN PANELS SHALL BE INSTALLED SYMMETRICALLY ABOUT THE CENTERLINE OF THE OVERHEAD MEMBER. THE NUMBER AND SPACING OF PANEL SUPPORT MEMBERS SHALL BE DETERMINED BY THE CONTRACTOR BASED ON THE WIDTH OF THE SIGN AND CROWN PANELS AND THE SUPPORT MEMBER SPACING PARAMETERS. SIGN PANELS SHALL BE SUPPORTED BY NO LESS THAN 3 SUPPORT MEMBERS. CROWN PANELS SHALL BE SUPPORTED BY NO LESS THAN 2 SUPPORT MEMBERS.

THE CONTRACTOR SHALL BE RESPONSIBLE FOR THE PROPER FIT OF THE SIGN STRUCTURES ON THE CONSTRUCTED FOUNDATIONS. PRIOR TO FABRICATION, THE CONTRACTOR SHALL TAKE FIELD MEASUREMENTS TO VERIFY ALL SIGN STRUCTURE DIMENSIONS DEPENDANT UPON THE CONSTRUCTED FOUNDATIONS. THE OVERHEAD MEMBER SHALL BE TEMPORARILY SUPPORTED, IN ORDER TO BRING ALL PLATES OF THE CONNECTIONS INTO FIRM CONTACT, WHILE THE HIGH STRENGTH BOLTS ARE INSTALLED AND TENSIONED. THE CONTRACTOR SHALL TAKE THE PROPER PRECAUTIONS TO ENSURE THE STABILITY OF ALL STRUCTURAL ELEMENTS UNTIL THE TOTAL STRUCTURE IS ERECTED.

THE COST OF THE TUBULAR STEEL MEMBERS, STRUCTURAL STEEL ROLLED SHAPES, PLATES AND BARS, HIGH-STRENGTH BOLTS AND ANCHORAGE MATERIALS, INCLUDING THE DESIGN, FABRICATION, COATING AND ERECTION, SHALL BE PAID FOR UNDER THE ITEM "MONOTUBE BRIDGE SIGN STRUCTURE". THE COST OF FOUNDATION EXCAVATION, REINFORCEMENT AND CONCRETE, INCLUDING THE DESIGN AND FABRICATION, SHALL BE PAID FOR UNDER THE ITEM "DRILLED SHAFT TRAFFIC STRUCTURE FOUNDATION".

REV.	DATE	REVISION DESCRIPTION	SHEET NO.

THE INFORMATION, INCLUDING ESTIMATED QUANTITIES OF WORK, SHOWN ON THESE SHEETS IS BASED ON LIMITED INVESTIGATIONS BY THE STATE AND IS IN NO WAY WARRANTED TO INDICATE THE CONDITIONS OF ACTUAL QUANTITIES OF WORK WHICH WILL BE REQUIRED.

Plotted Date: 5/15/2015

DESIGNER/DRAFTER: ACC
CHECKED BY: JPC
SCALE AS NOTED

STATE OF CONNECTICUT
DEPARTMENT OF TRANSPORTATION

Filename: ...\SB_MBS-1_Elevation.dgn

SIGNATURE/BLOCK:
OFFICE OF ENGINEERING
APPROVED BY:

PROJECT TITLE:
REPLACEMENT OF HIGHWAY SIGNING ON ROUTE 8

TOWN:
THOMASTON, HARWINTON TORRINGTON, WINCHESTER

DRAWING TITLE:
MONOTUBE BRIDGE SIGN STRUCTURE

PROJECT NO. 174-381
DRAWING NO. S-2
SHEET NO. 05.02

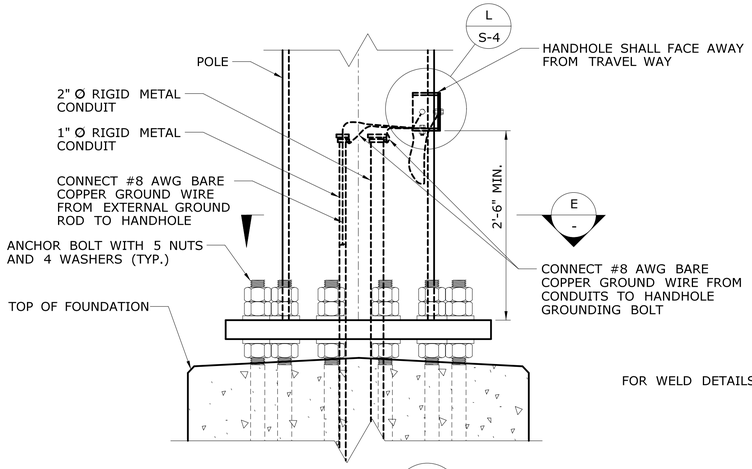

DETAIL A
SCALE: 1" = 1'-0"

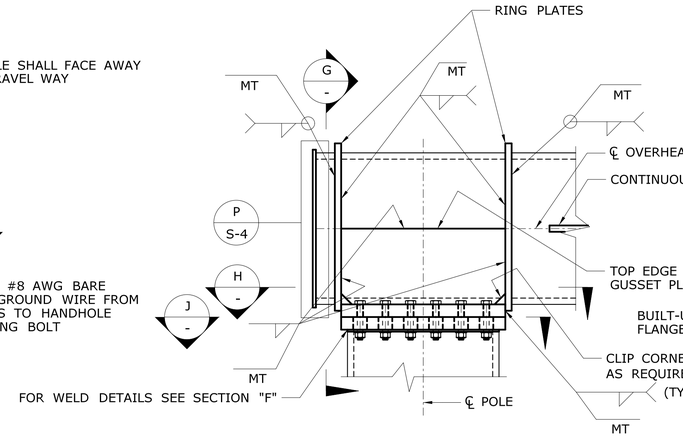

NOTE: TO ASSEMBLE BOX CONNECTION, FIRST FIT-UP & WELD FLANGE PLATE, GUSSET PLATES AND RING PLATES; THEN WELD BOX CONNECTION TO OVERHEAD MEMBER

DETAIL B
SCALE: 1" = 1'-0"

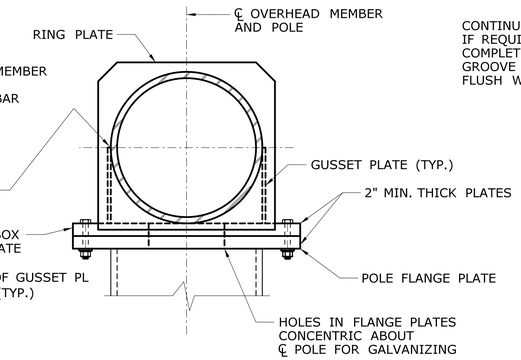

SECTION G
SCALE: 1" = 1'-0"

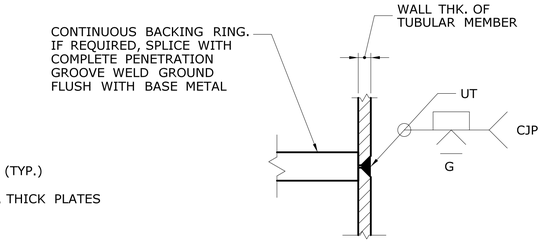

DETAIL D
SCALE: 3" = 1'-0"

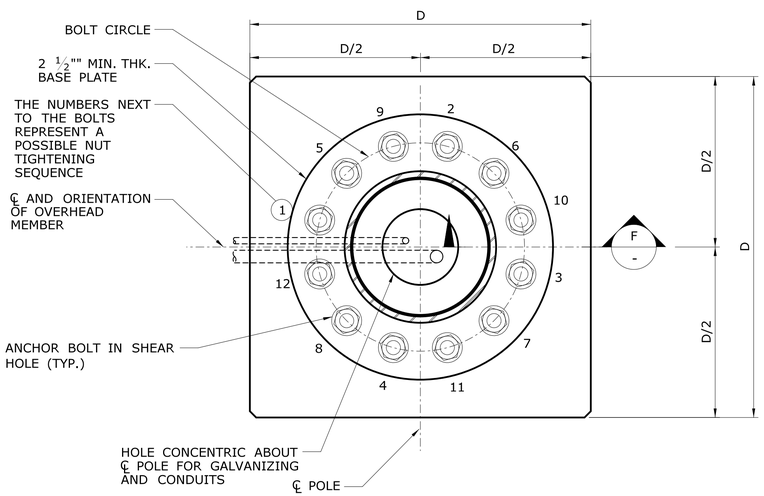

SECTION E
SCALE: 1" = 1'-0"

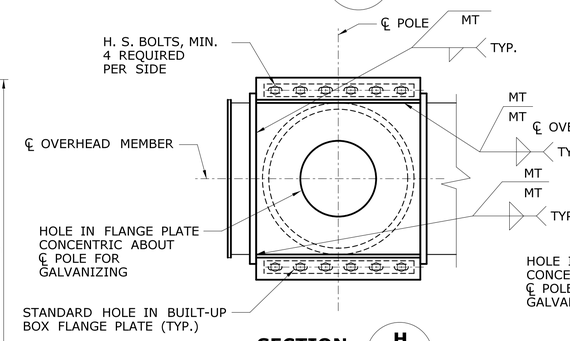

SECTION H
SCALE: 1" = 1'-0"

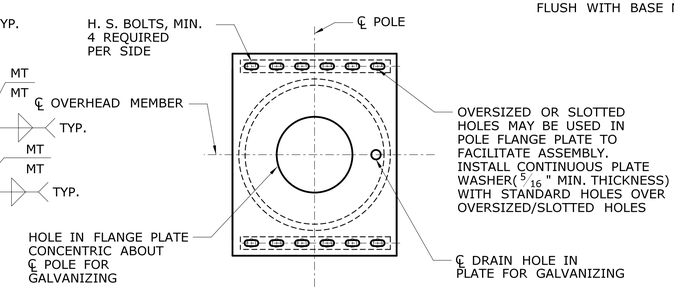

SECTION J
SCALE: 1" = 1'-0"

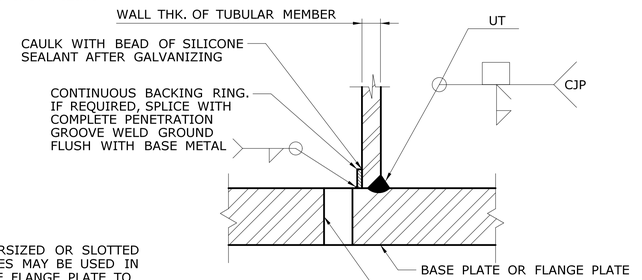

SECTION F
SCALE: 3" = 1'-0"

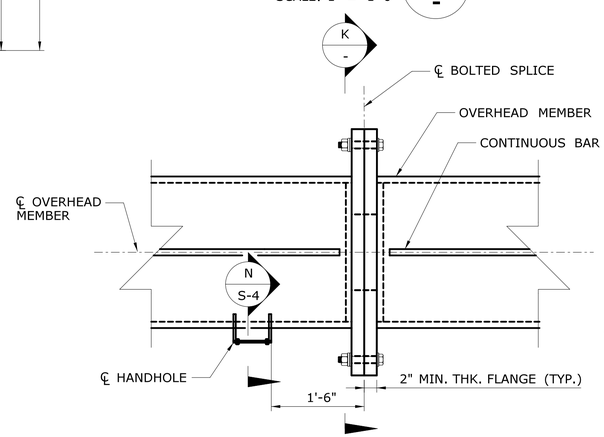

DETAIL C
SCALE: 1" = 1'-0"

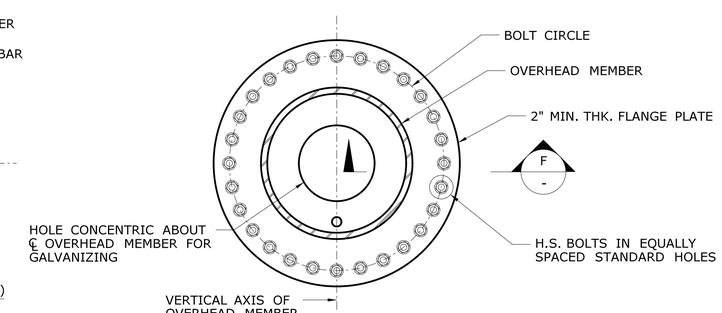

SECTION K
SCALE: 1" = 1'-0"

REV.	DATE	REVISION DESCRIPTION	SHEET NO.

THE INFORMATION, INCLUDING ESTIMATED QUANTITIES OF WORK, SHOWN ON THESE SHEETS IS BASED ON LIMITED INVESTIGATIONS BY THE STATE AND IS IN NO WAY WARRANTED TO INDICATE THE CONDITIONS OF ACTUAL QUANTITIES OF WORK WHICH WILL BE REQUIRED.

Plotted Date: 5/15/2015

DESIGNER/DRAFTER: ACC
CHECKED BY: JPC
SCALE AS NOTED

STATE OF CONNECTICUT
DEPARTMENT OF TRANSPORTATION

Filename: ...\SB_MBS-2_Details_1.dgn

SIGNATURE/BLOCK:
OFFICE OF ENGINEERING
APPROVED BY:

PROJECT TITLE:
REPLACEMENT OF HIGHWAY SIGNING ON ROUTE 8

TOWN:
THOMASTON, HARWINTON TORRINGTON, WINCHESTER

DRAWING TITLE:
MONOTUBE BRIDGE SIGN STRUCTURE DETAILS - 1

PROJECT NO. 174-381
DRAWING NO. S-3
SHEET NO. 05.03

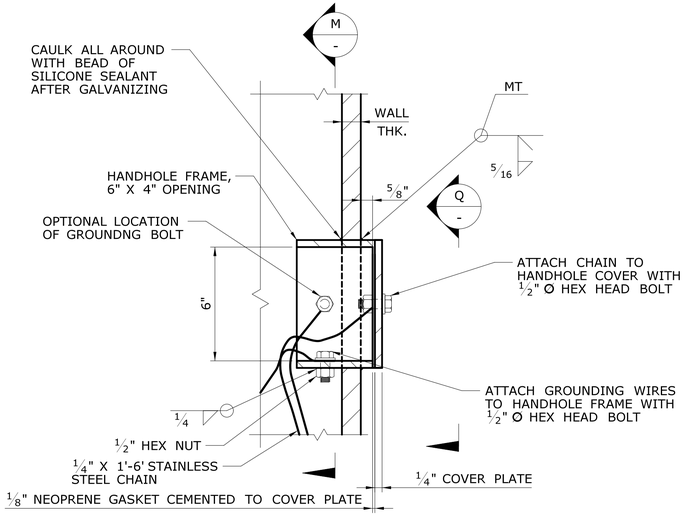

DETAIL L / -
SCALE: 3" = 1'-0"

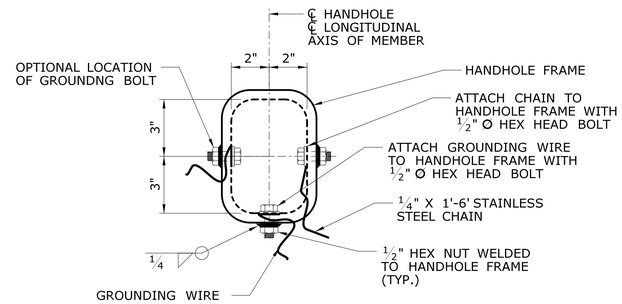

SECTION M / -
SCALE: 3" = 1'-0"

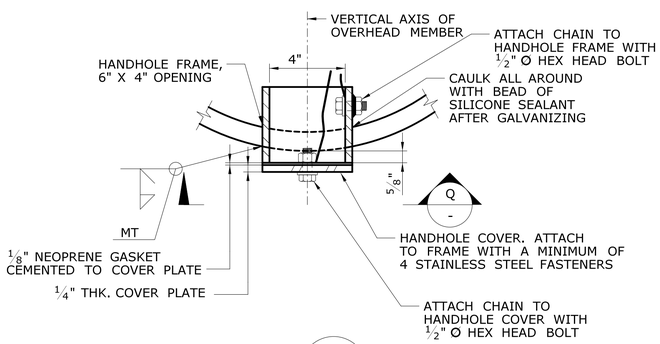

SECTION N / -
SCALE: 3" = 1'-0"

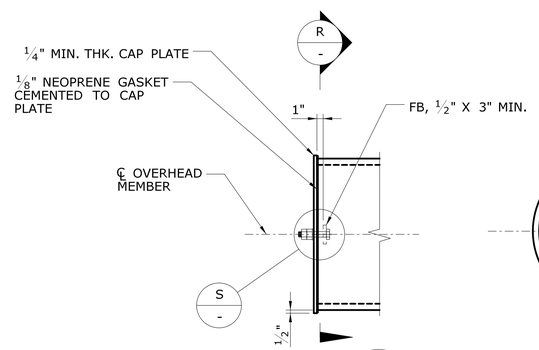

DETAIL P / -
SCALE: 1" = 1'-0"

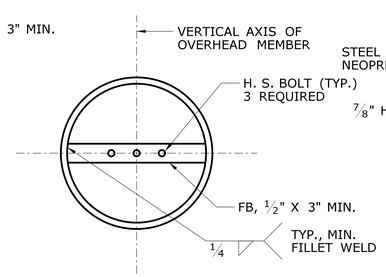

DETAIL R / -
SCALE: 1" = 1'-0"

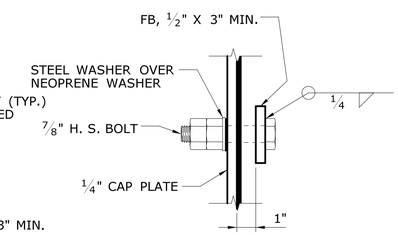

DETAIL S / -
SCALE: 3" = 1'-0"

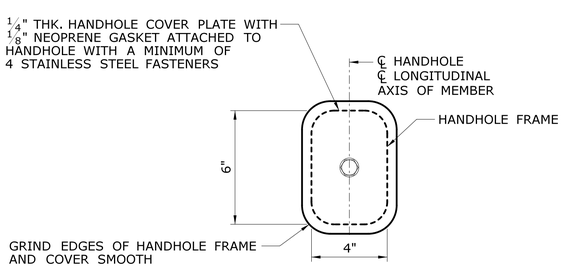

VIEW Q / -
SCALE: 3" = 1'-0"

REV.	DATE	REVISION DESCRIPTION	SHEET NO.

THE INFORMATION, INCLUDING ESTIMATED QUANTITIES OF WORK, SHOWN ON THESE SHEETS IS BASED ON LIMITED INVESTIGATIONS BY THE STATE AND IS IN NO WAY WARRANTED TO INDICATE THE CONDITIONS OF ACTUAL QUANTITIES OF WORK WHICH WILL BE REQUIRED.

Plotted Date: 5/15/2015

DESIGNER/DRAFTER: ACC
CHECKED BY: JPC
SCALE AS NOTED

STATE OF CONNECTICUT
DEPARTMENT OF TRANSPORTATION

Filename: ...\SB_MBS-3_Details_2.dgn

SIGNATURE/ BLOCK:
OFFICE OF ENGINEERING
APPROVED BY:

PROJECT TITLE:
REPLACEMENT OF HIGHWAY SIGNING ON ROUTE 8

TOWN:
THOMASTON, HARWINTON
TORRINGTON, WINCHESTER

DRAWING TITLE:
MONOTUBE BRIDGE SIGN STRUCTURE DETAILS - 2

PROJECT NO. 174-381
DRAWING NO. S-4
SHEET NO. 05.04

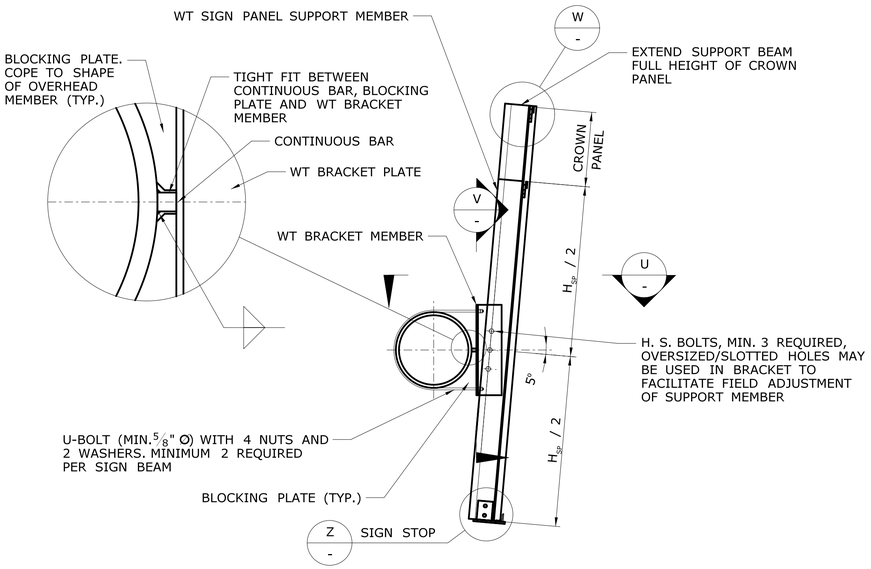

SECTION T
SCALE: 1/2" = 1'-0"

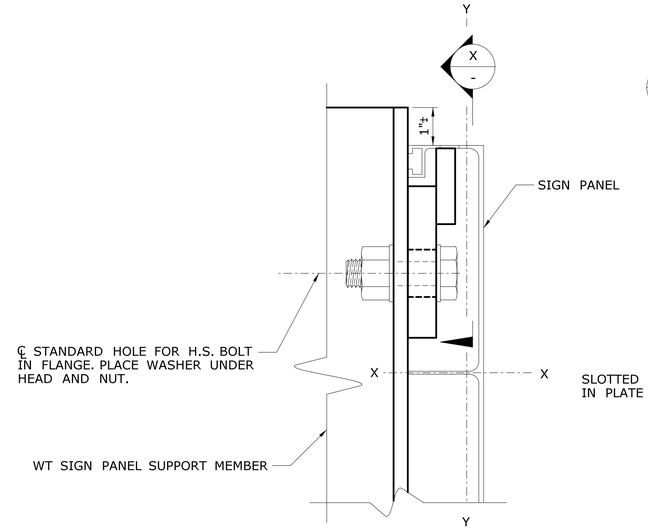

SECTION W
SCALE 6" = 1'-0"

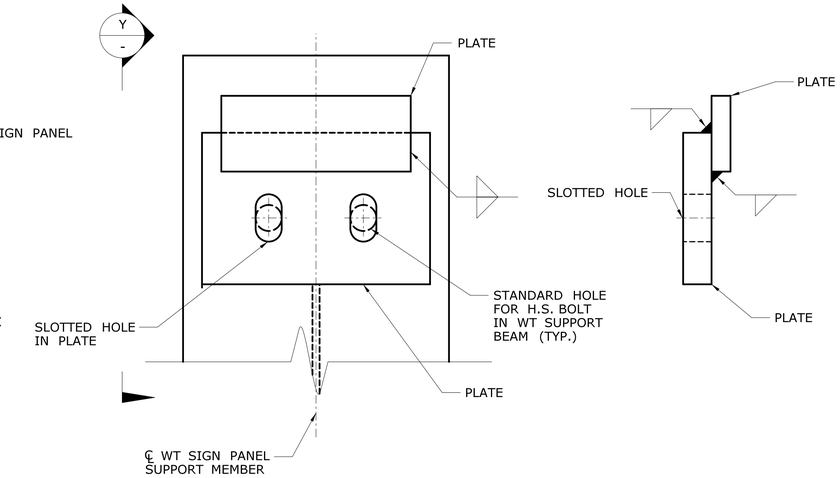

SECTION X
SCALE: 6" = 1'-0"

SECTION Y
SCALE: 6" = 1'-0"

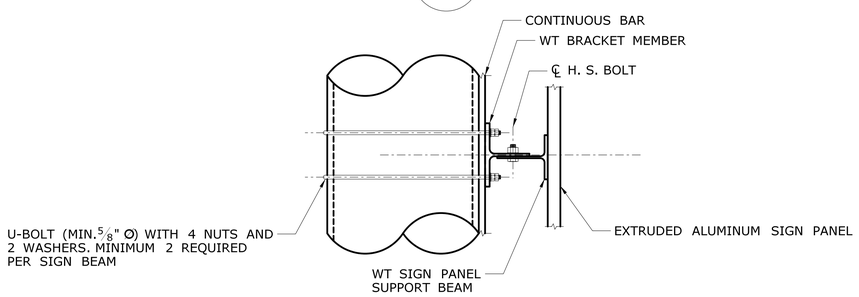

SECTION U
SCALE: 1" = 1'-0"

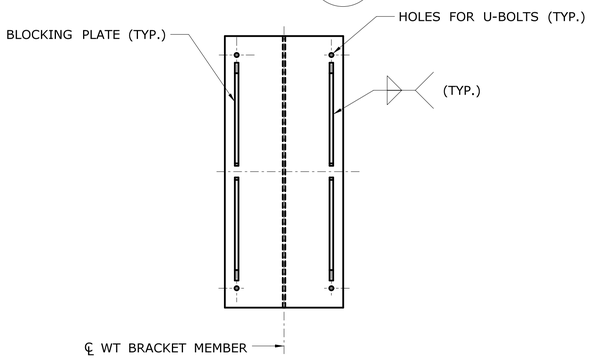

SECTION V
SCALE: 1 1/2" = 1'-0"

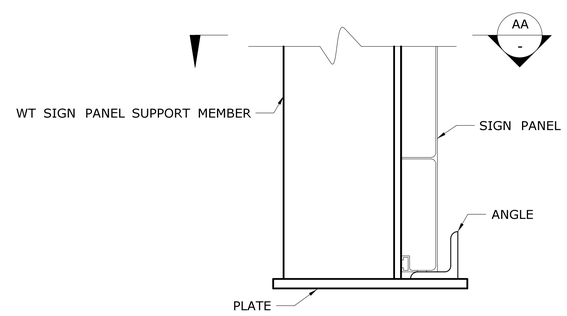

SECTION Z
SCALE: 3" = 1'-0"

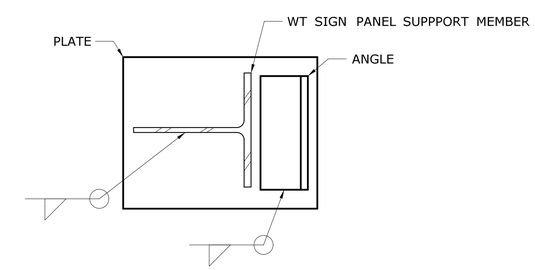

SECTION AA
SCALE: 3" = 1'-0"

REV.	DATE	REVISION DESCRIPTION	SHEET NO.

THE INFORMATION, INCLUDING ESTIMATED QUANTITIES OF WORK, SHOWN ON THESE SHEETS IS BASED ON LIMITED INVESTIGATIONS BY THE STATE AND IS IN NO WAY WARRANTED TO INDICATE THE CONDITIONS OF ACTUAL QUANTITIES OF WORK WHICH WILL BE REQUIRED.

Plotted Date: 5/15/2015

DESIGNER/DRAFTER: ACC
CHECKED BY: JPC
SCALE AS NOTED

STATE OF CONNECTICUT
DEPARTMENT OF TRANSPORTATION

Filename: ...\SB_MBS-4_Details_3.dgn

SIGNATURE/ BLOCK:
OFFICE OF ENGINEERING
APPROVED BY:

PROJECT TITLE:
REPLACEMENT OF HIGHWAY SIGNING ON ROUTE 8

TOWN:
THOMASTON, HARWINTON TORRINGTON, WINCHESTER

DRAWING TITLE:
MONOTUBE BRIDGE SIGN STRUCTURE DETAILS - 3

PROJECT NO. 174-381
DRAWING NO. S-5
SHEET NO. 05.05

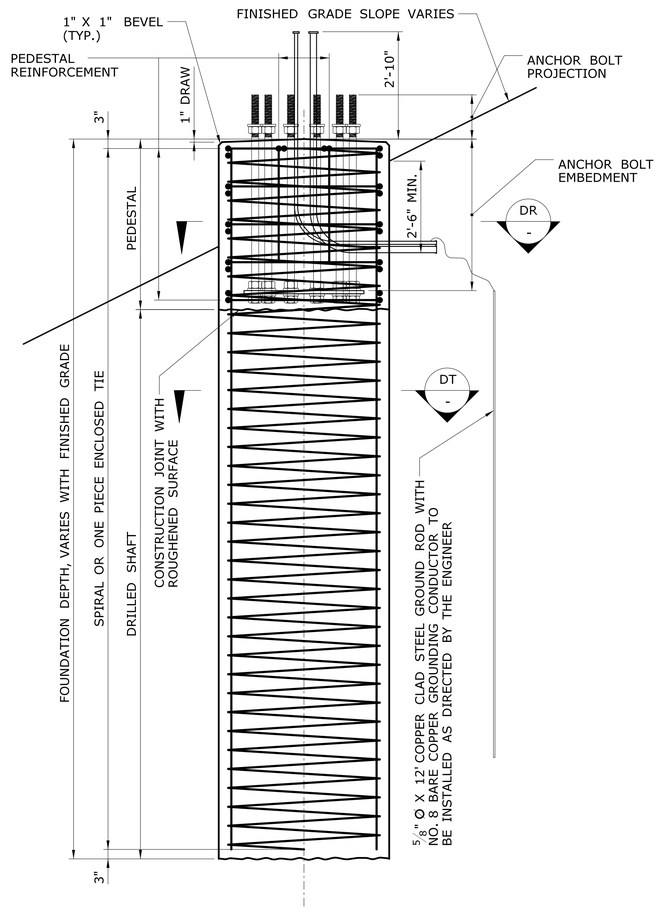

FOUNDATION IN EARTH DS -

SCALE: 1/2" = 1'-0"

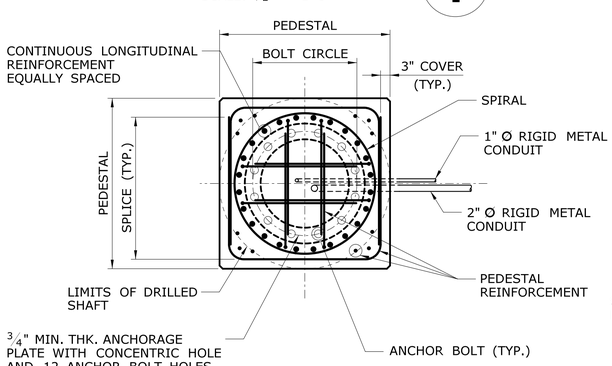

SECTION DR -

SCALE: 1/2" = 1'-0"

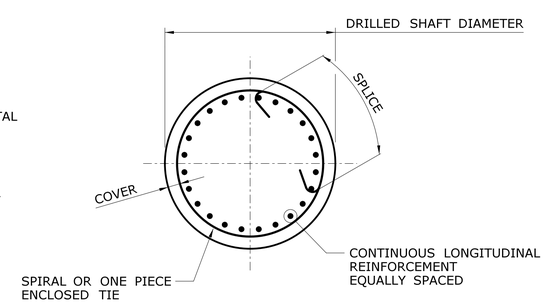

SECTION DT -

SCALE: 1/2" = 1'-0"

FOUNDATION NOTES

THE DRILLED SHAFT FOUNDATION SHALL BE DESIGNED, FABRICATED, AND CONSTRUCTED BY THE CONTRACTOR IN ACCORDANCE WITH THE SPECIAL PROVISION "DRILLED SHAFT TRAFFIC STRUCTURE FOUNDATION".

FOR THE DESIGN OF THE DRILLED SHAFT FOUNDATION, THE CONTRACTOR IS RESPONSIBLE TO DETERMINE THE SUBSURFACE CONDITIONS (CHARACTER OF THE SOIL AND ROCK, PRESENCE OF GROUND WATER, ETC.) IN THE LOCATION OF, ADJACENT TO AND BELOW THE SHAFT EXCAVATION. THE CONTRACTOR SHALL PERFORM A SUBSURFACE INVESTIGATION FOR EACH FOUNDATION LOCATION.

THE DESIGN OF THE FOUNDATION SHALL BE COORDINATED WITH THE SIGN STRUCTURE AND THE STRUCTURE ANCHORAGE TO ENSURE THAT THE FOUNDATION IS ADEQUATE FOR THE STRUCTURE REACTIONS AND TO AVOID CONFLICTS BETWEEN THE EMBEDDED STRUCTURE ANCHORAGE AND THE FOUNDATION REINFORCEMENT.

THE SIGN STRUCTURE SHALL NOT BE INSTALLED UNTIL BOTH THE PEDESTAL CONCRETE AND SHAFT CONCRETE HAVE ATTAINED A 28 DAY COMPRESSIVE STRENGTH, f'_c, GREATER THAN OR EQUAL TO 4,000 PSI.

ADDITIONAL RIGID METAL CONDUITS SHALL BE PROVIDED AS DIRECTED BY THE ENGINEER.

ALL EMPTY RIGID METAL CONDUITS SHALL BE CAPPED.

THE RIGID METAL CONDUIT SWEEPS SHALL EXTEND A MINIMUM 2'-0" FROM THE SIDE OF THE FOUNDATION.

THE NO. 8 AWG BARE COPPER CONDUCTOR SHALL BE CONNECTED TO THE EXTERNAL GROUND ROD USING A GROUNDING CLAMP APPROVED FOR DIRECT BURIAL.

THE COST OF FOUNDATION EXCAVATION, REINFORCEMENT AND CONCRETE, INCLUDING THE DESIGN AND FABRICATION, SHALL BE PAID FOR UNDER THE ITEM "DRILLED SHAFT TRAFFIC STRUCTURE FOUNDATION".

REV.	DATE	REVISION DESCRIPTION	SHEET NO.

THE INFORMATION, INCLUDING ESTIMATED QUANTITIES OF WORK, SHOWN ON THESE SHEETS IS BASED ON LIMITED INVESTIGATIONS BY THE STATE AND IS IN NO WAY WARRANTED TO INDICATE THE CONDITIONS OF ACTUAL QUANTITIES OF WORK WHICH WILL BE REQUIRED.

Plotted Date: 5/15/2015

DESIGNER/DRAFTER: ACC

CHECKED BY: JPC

SCALE AS NOTED

STATE OF CONNECTICUT
DEPARTMENT OF TRANSPORTATION

Filename: ...\SB_DSF-1_Fnd.dgn

SIGNATURE/BLOCK: OFFICE OF ENGINEERING

APPROVED BY:

PROJECT TITLE: REPLACEMENT OF HIGHWAY SIGNING ON ROUTE 8

TOWN: THOMASTON, HARWINTON TORRINGTON, WINCHESTER

DRAWING TITLE: DRILLED SHAFT TRAFFIC STRUCTURE FOUNDATION

PROJECT NO. 174-381

DRAWING NO. S-6

SHEET NO. 05.06