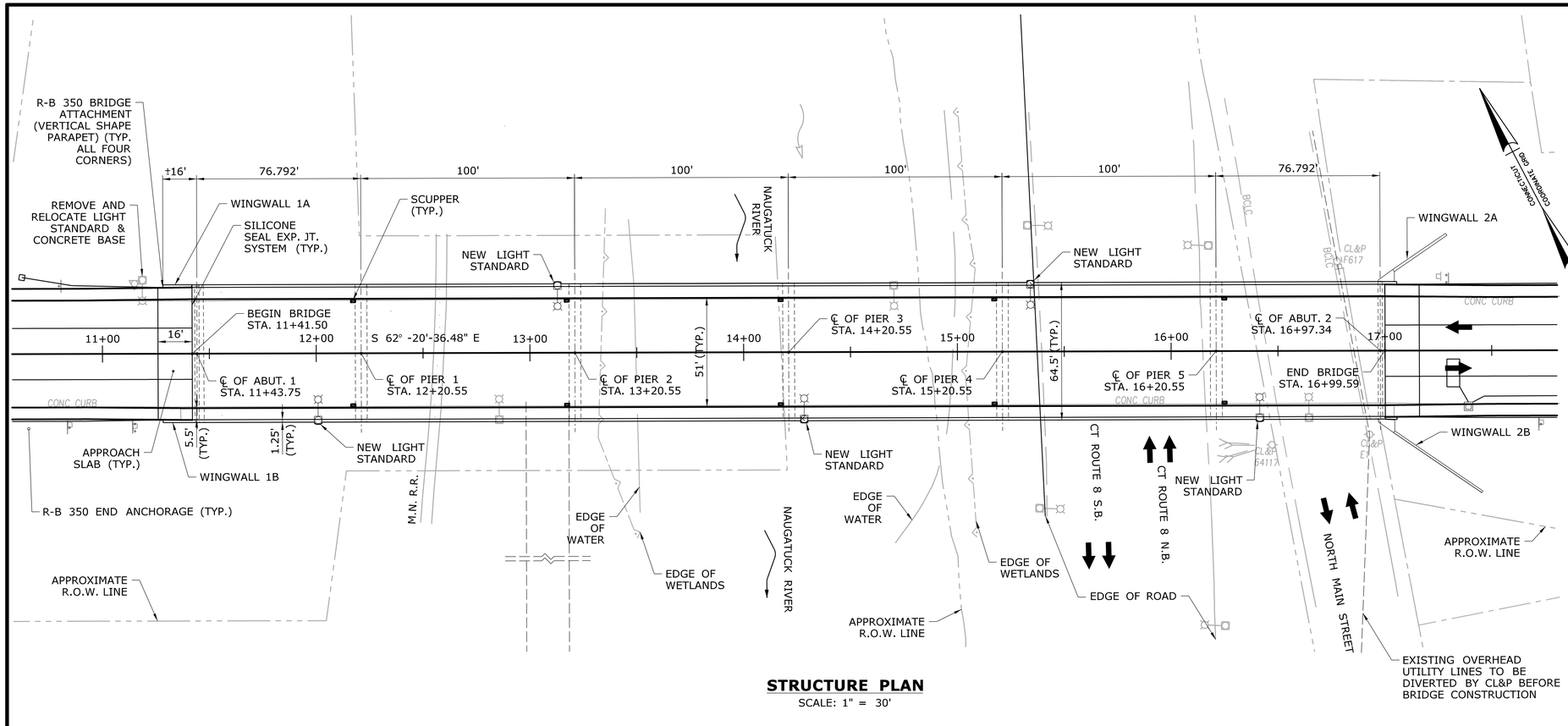

STRUCTURE PLAN

SCALE: 1" = 30'

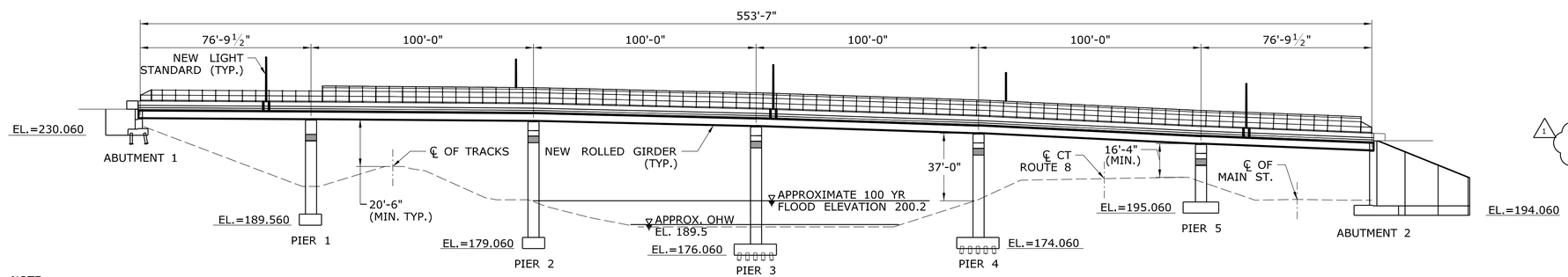

NOTE:
BOTTOM FOOTING ELEVATIONS SHOWN ARE TAKEN FROM AS-BUILT DRAWINGS. ADJUSTED FOR CURRENT VERTICAL DATUM.

ELEVATION

SCALE: 1" = 30'

MEMBER	SHIPPING LENGTH	SHIPPING HEIGHT	SHIPPING WIDTH	SHIPPING WEIGHT
BEAM A (SPAN 1)	107 FT	2'-11"	1'-4"	32.8 kips
BEAM B (SPAN 2, 3, 4 & 5)	100 Ft.	2'-11"	1'-4"	30.6 kips
BEAM C (SPAN 6)	47 Ft.	2'-11"	1'-4"	14.4 kips

CONCRETE DISTRIBUTION		
Superstructure	C.Y.	1264
Substructure	C.Y.	160
Footings	C.Y.	0
Total	C.Y.	1684

DESIGNED BY: CDR MAGUIRE INC.

Yihui Wu

Digitally signed by Yihui Wu
DN: c=US, st=RI, l=Providence, ou=Bridge - Structural, email=Yihui.Wu@CDRMaguire.com, o=CDR Maguire Inc., cn=Yihui Wu
Date: 2015.11.11 15:12:46 -05'00'

NOTICE TO BRIDGE INSPECTORS

THE DEPARTMENT'S BRIDGE SAFETY PROCEDURES REQUIRE THIS BRIDGE TO BE INSPECTED FOR,BUT NOT LIMITED TO,ALL APPROPRIATE COMPONENTS INDICATED IN THE GOVERNING MANUALS FOR BRIDGE INSPECTION. ATTENTION MUST BE GIVEN TO INSPECTING THE FOLLOWING SPECIAL COMPONENTS AND DETAILS (THE LISTING OF COMPONENTS FOR SPECIFIC ATTENTION SHALL NOT BE CONSTRUED TO REDUCE THE IMPORTANCE OF INSPECTION OF ANY OTHER COMPONENT OF THE STRUCTURE). THE FREQUENCY OF INSPECTION OF THIS STRUCTURE SHALL BE IN ACCORDANCE WITH THE GOVERNING MANUALS FOR BRIDGE INSPECTION,UNLESS OTHERWISE DIRECTED BY THE MANAGER OF BRIDGE SAFETY AND EVALUATION.

COMPONENT OR DETAIL	BRIDGE SHEET REFERENCE
None	-

GENERAL NOTES:

SPECIFICATIONS: Connecticut Department of Transportation Form 816 (2004), Supplements Dated January 2015, and Special Provisions.

DESIGN SPECIFICATIONS: AASHTO LRFD Bridge Design Specification (AASHTO 2014) with interim Specifications, as supplemented by the Connecticut Department of Transportation Bridge Design Manual (2011).

ALLOWABLE DESIGN STRESSES:

Class "F" Concrete Based on f'c = 4400 psi.

The specified concrete strength used in design, f'c, of the concrete components is noted above. The minimum compressive strength of the concrete in the constructed componenets shall conform to the requirements of the special provision "section 6.01 concrete for structures".

Reinforcement
(ASTM A615 Grade 60) Fy = 60 ksi.

Structural Steel
(AASHTO M270 Grade 50W T2) Fy = 50 ksi.

LIVE LOAD: HL-93

FUTURE PAVING ALLOWANCE: None

STRUCTURAL STEEL: See structure sheet notes for designations and requirements.

REMAIN-IN-PLACE FORMS: The use of Remain-in-place forms shall be allowed between beams. The beams have been designed for an additional weight of 15 psf between beams.

BITUMINOUS CONCRETE OVERLAY: Total thickness shall be 3". Bottom course thickness shall consist of 1" HMA S0.25, and the top course thickness shall consist of 2" of HMA S0.5.

FOUNDATION PRESSURES: N.A.

DIMENSIONS: All dimensions shown on the plans are in feet and inches unless noted otherwise. All elevations are given in feet. When elevations are given to less than three decimal places, the omitted digits shall be assumed to be zeros.

EXISTING DIMENSIONS: Dimensions of the existing structure shown on these plans are for reference only. They have been taken from the original design drawings and are not guaranteed. The Contractor shall take all field measurements necessary to ensure proper fit of the finished work and shall assume full responsibility for their accuracy. When shop drawings based on field measurements are submitted for approval, the field measurements shall also be submitted for reference by the reviewer.

COMPOSITE CONSTRUCTION: No temporary intermediate supports shall be used prior to and during the placing and setting of the concrete deck slab. Temporary supports may be used for structural steel erection only. Construction loads and dead loads will be permitted when directed by the Engineer but only when the concrete has reached a strength of f'c = 3500 psi. Live loads (traffic) will be permitted on the structure after the concrete has reached a strength of f'c = 4400 psi.

CLASS "F" CONCRETE: Class "F" Concrete shall be used throughout unless noted otherwise.

JOINT SEAL: See Special Provisions.

EXPOSED EDGES: Exposed edges of concrete shall be beveled 1" x 1" unless dimensioned otherwise.

CONCRETE COVER: All reinforcement shall have 2½" clear cover unless dimensioned otherwise.

REINFORCEMENT: All reinforcement shall be ASTM A615 Grade 60.

1 FELT: The cost of furnishing and placing 15-pound roofing felt shall be included in the Item for Class "F" concrete.

EPOXY COATED REINFORCING BARS: All reinforcement shall be epoxy coated unless otherwise noted. These bars shall be included in the pay item for "Deformed Steel Bars (Epoxy Coated)."

PREFORMED EXPANSION JOINT FILLER: The cost of furnishing and installing Preformed Expansion Joint Filler shall be included in the cost of the item "Class "F" Concrete."

CLOSED CELL ELASTOMER: The cost of furnishing and installing Closed Cell Elastomer shall be included in the cost of the item "Class "F" Concrete."

CONSTRUCTION JOINTS: Construction joints, other than those shown on the plans, will not be permitted without the prior approval of the Engineer.

BRIDGE IDENTIFICATION PLACARDS: The contractor shall provide and install new bridge identification signs at the leading end of each bridge parapet on the traffic side. The signs shall be fabricated with 40 gauge aluminum sheet metal. The signs shall be 4"x12" with 3" white reflective block letters on green reflective sheeting. Each sign shall read 00596. All costs associated with providing and installing the bridge signs shall be covered under item 1208929, Sign Face Sheet Aluminum (Type IV Reflective Sheeting). The final location and attachment method for the signs shall be approved by the engineer prior to installation.

PAINT: No painting of structural steel is required. Steel surfaces are to be prepared for weathering in accordance with the specifications.

ADDENDUM NO. 1

REV.	DATE	REVISION DESCRIPTION	SHEET NO.
1	11/11/15	REVISED NOTE	04.02.A1

THE INFORMATION, INCLUDING ESTIMATED QUANTITIES OF WORK, SHOWN ON THESE SHEETS IS BASED ON LIMITED INVESTIGATIONS BY THE STATE AND IS IN NO WAY WARRANTED TO INDICATE THE CONDITIONS OF ACTUAL QUANTITIES OF WORK WHICH WILL BE REQUIRED.

Plotted Date: 11/11/2015

DESIGNER/DRAFTER: CEB
CHECKED BY: BDB
SCALE AS NOTED

STATE OF CONNECTICUT
DEPARTMENT OF TRANSPORTATION

Filename: ...\S02-Sb_GenPlan1.dgn

SIGNATURE/BLOCK: STATE OF CONNECTICUT YIHUI F. WU No. 27995 LICENSED PROFESSIONAL ENGINEER

CDR Group
2080 Silas Deane Highway
Rocky Hill, CT 06067

PROJECT TITLE:
REHABILITATION OF BRIDGE NO. 00596 OVER NAUGATUCK RIVER

TOWN: **NAUGATUCK**

DRAWING TITLE: **GENERAL PLAN 1**

PROJECT NO. **87-142**
DRAWING NO. **S-02**
SHEET NO. **04.02.A1**

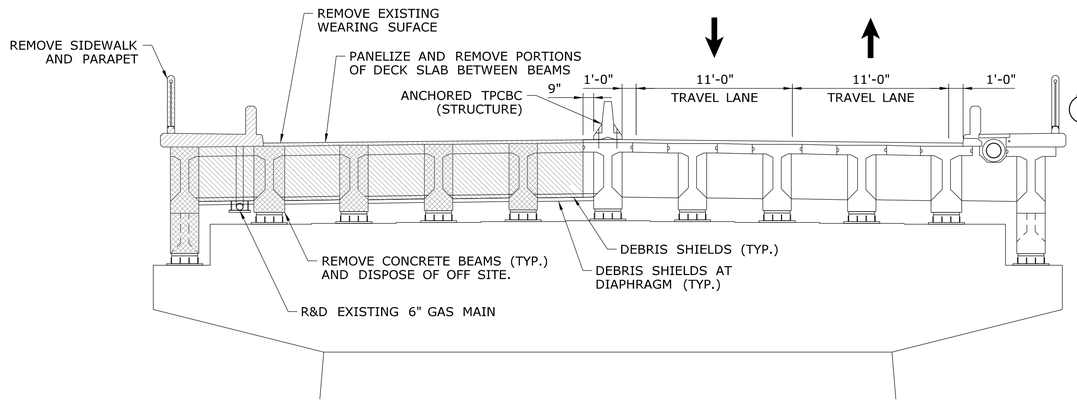

STAGE I DEMOLITION

SCALE: 3/16" = 1'-0"

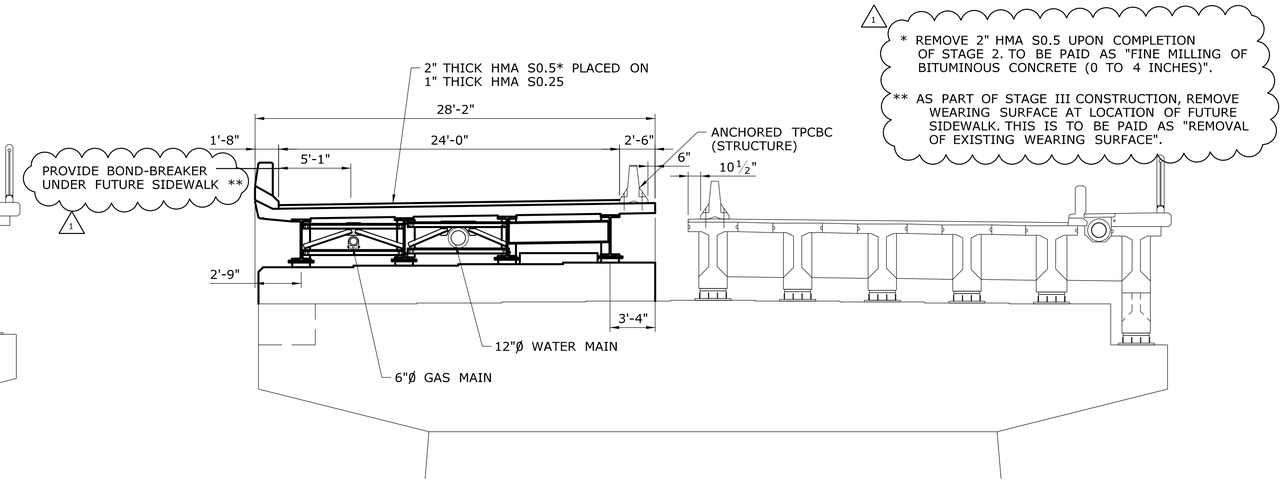

COMPLETED STAGE I CONSTRUCTION

SCALE: 3/16" = 1'-0"

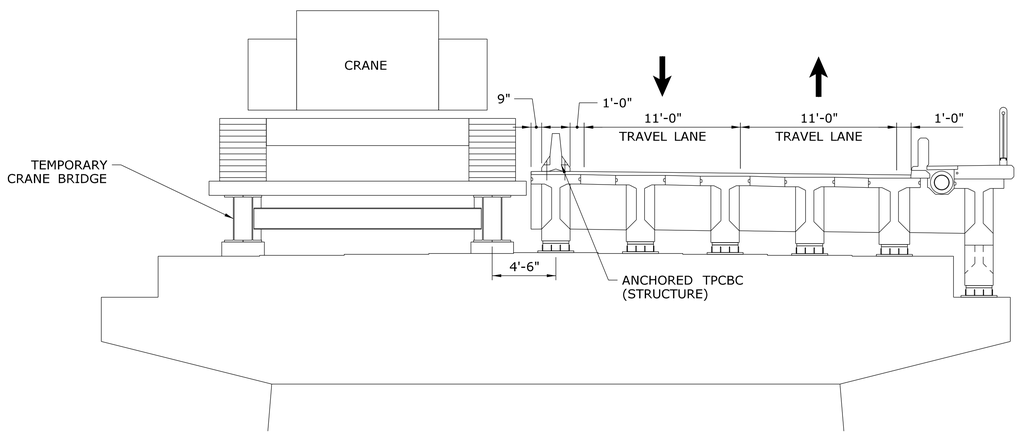

STAGE I TEMPORARY CRANE BRIDGE

SCALE: 3/16" = 1'-0"

A TEMPORARY CRANE BRIDGE SIMILAR TO THAT SHOWN MAY BE USED DURING THE DEMOLITION OF THE EXISTING SUPERSTRUCTURE. THE CONTRACTOR SHALL DESIGN TEMPORARY SUPPORT STRUCTURES SUCH AS THIS AS PART OF THEIR MEANS AND METHODS (SEE NOTES BELOW).

STAGE 1

PHASE 1

a. PLACE ANCHORED TEMPORARY PRECAST CONCRETE BARRIER CURB (TPCBC). MOVE TRAFFIC TO SOUTH SIDE ON BRIDGE.
b. DECOMMISSION 6" GAS MAIN.
c. REMOVE WEARING SURFACE ON NORTH SIDE AND REMOVE EXISTING NORTH SIDEWALK.

PHASE 2

WORKING SPAN BY SPAN:
a. INSTALL DEBRIS SHIELDS.
b. DE-STRESS AND REMOVE TRANSVERSE POST-TENSIONING FROM EXISTING DIAPHRAGMS, SEE NOTE 4.
c. PANELIZE THE EXISTING DECK SLAB AND REMOVE DIAPHRAGMS BETWEEN BEAMS AND REMOVE AS SHOWN, SEE NOTES BELOW.
d. REMOVE 6" DIA. GAS MAIN.
e. REMOVE AND DISPOSE OF THE FIVE EXISTING NORTH SIDE CONCRETE BEAMS.

PHASE 3

a. RETROFIT THE NORTH SIDE OF THE PIER CAPS INCLUDING BUILDING OUT THE EXISTING NOTCH AT PIERS 2,3, AND 4.
b. CONSTRUCT KEEPER BLOCKS.
c. PLACE THE PROPOSED NORTH SIDE GIRDERS 1 THRU 4.

PHASE 4

a. INSTALL NEW 6" DIA. GAS MAIN IN BAY 1, INSTALL NEW 12" DIA. WATER MAIN IN BAY 2 AND COORDINATE WITH UTILITIES FOR CONNECTING GAS AND WATER MAINS TO EXISTING SERVICE OFF THE BRIDGE.
b. CONSTRUCT THE PROPOSED NORTH SIDE BRIDGE DECK AND PARAPET (NO SIDEWALK).
c. PLACE ANCHORED TPCBC ON NEW DECK.
d. PLACE 3" PAVEMENT ON NEW ROADWAY.

NOTES

1. ANY TEMPORARY WORKS OR PROCEDURE REQUIRED FOR THE REMOVAL OF THE EXISTING SUPERSTRUCTURE (INCLUDING THE TEMP. CRANE BRIDGE) SHALL BE DESIGNED AND INSTALLED BY THE CONTRACTOR AS PART OF HIS TEMPORARY WORKS.

2. THE CONTRACTOR SHALL ENSURE THAT THE INSTALLATION, USE AND REMOVAL OF ANY TEMPORARY SUPPORT STRUCTURE IS SAFE AND IS NOT DETRIMENTAL TO THE INTEGRITY OF THE EXISTING SUBSTRUCTURE. DETAILS AND DESIGN CALCULATIONS SHALL BE SUBMITTED TO THE ENGINEER FOR APPROVAL.

3. ALL DESIGN CALCULATIONS, PROCEDURES, AND DRAWINGS THAT ARE PART OF THE SUPERSTRUCTURE DEMOLITION SHALL BE SIGNED AND STAMPED BY A PROFESSIONAL ENGINEER LICENSED IN THE STATE OF CONNECTICUT.

4. THE CONTRACTOR SHALL CAREFULLY REMOVE CONCRETE AT THE PHASE LINE, CUT TENDONS, JACK 20 KIPS OF LOAD INTO EACH TENDON TO REMAIN, AND ANCHOR THE STRAND AGAINST THE CONCRETE TO REMAIN. ONLY ONE DIAPHRAGM LINE MAY BE DE-STRESSED AT ONE TIME IN ANY GIVEN SPAN.

5. ANCHORED TPCBC SHALL BE A CRASH TESTED SYSTEM IN ACCORDANCE WITH NCHRP 350 TO A TL-3 LEVEL.

6. DEBRIS SHIELDING IS TO BE PAID FOR UNDER ITEM 0503001A - REMOVAL OF SUPERSTRUCTURE.

ADDENDUM NO. 1

REV.	DATE	REVISION DESCRIPTION	SHEET NO.
1	11/11/15	REVISED NOTE	04.04.A1

THE INFORMATION, INCLUDING ESTIMATED QUANTITIES OF WORK, SHOWN ON THESE SHEETS IS BASED ON LIMITED INVESTIGATIONS BY THE STATE AND IS IN NO WAY WARRANTED TO INDICATE THE CONDITIONS OF ACTUAL QUANTITIES OF WORK WHICH WILL BE REQUIRED.

Plotted Date: 11/11/2015

DESIGNER/DRAFTER: CEB
CHECKED BY: BDB
SCALE AS NOTED

STATE OF CONNECTICUT
DEPARTMENT OF TRANSPORTATION

Filename: ...\S04-Sb_StageConPlan1.dgn

SIGNATURE/BLOCK:
CDR Group
2080 Silas Deane Highway
Rocky Hill, CT 06067
STATE OF CONNECTICUT VIRGIL R. PIO No. 27086 LICENSED PROFESSIONAL ENGINEER

PROJECT TITLE:
REHABILITATION OF BRIDGE NO. 00596 OVER NAUGATUCK RIVER

TOWN: **NAUGATUCK**

DRAWING TITLE: **STAGE CONSTRUCTION SHEET 1 OF 2**

PROJECT NO. **87-142**
DRAWING NO. **S-04**
SHEET NO. **04.04.A1**

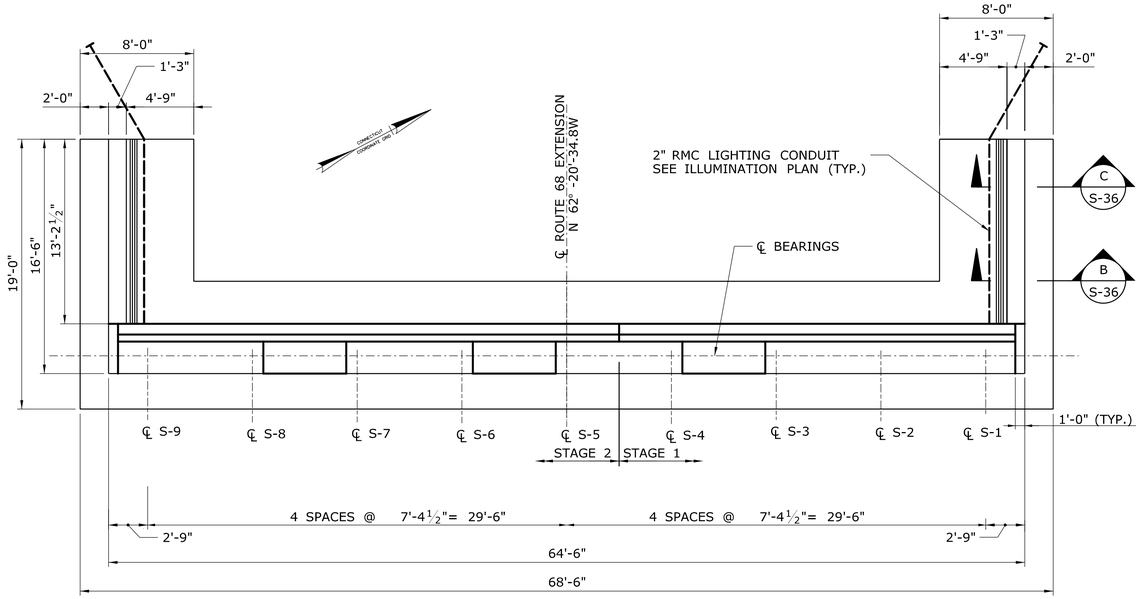

PLAN

SCALE: 3/16"=1'-0"

GIRDER	BEAM SEAT ELEVATION
S-1	238.476
S-2	238.587
S-3	238.697
S-4	238.808
S-5	238.918
S-6	238.808
S-7	238.697
S-8	238.587
S-9	238.476

NOTES:

1. ELEVATIONS OF EXISTING STRUCTURE ARE FROM AS-BUILT DRAWINGS AND MUST BE FIELD VERIFIED BEFORE CONSTRUCTION BEGINS.
2. REINFORCING FOR SEISMIC SHEAR/KEEPER BLOCKS SHALL BE DRILLED AND GROUTED INTO EXISTING ABUTMENT. SEE DRAWING NO. S-19 FOR DETAILS.
3. THE DETERIORATED CONCRETE QUANTITIES (SPALLING, CRACKING, ETC.) SHOWN ARE APPROXIMATE PER THE LATEST BRIDGE INSPECTION REPORT. CONTRACTOR SHALL PROVIDE ACCESS TO ALL EXISTING FOUNDATION STRUCTURES, INCLUDING WINGWALLS, SO THAT CONNECTICUT DEPARTMENT OF TRANSPORTATION PERSONEL CAN INSPECT THE FOUNDATION STRUCTURES TO DETERMINE CONTRACT REPAIR TYPE AND QUANTITIES.
4. REPAIRS TO SPALLED AND HOLLOWED AREAS AND CRACK SEALING ARE TO BE IN ACCORDANCE WITH THE SPECIAL PROVISIONS AND DETAILS ON DRAWING NO'S. S-20 AND S-21.

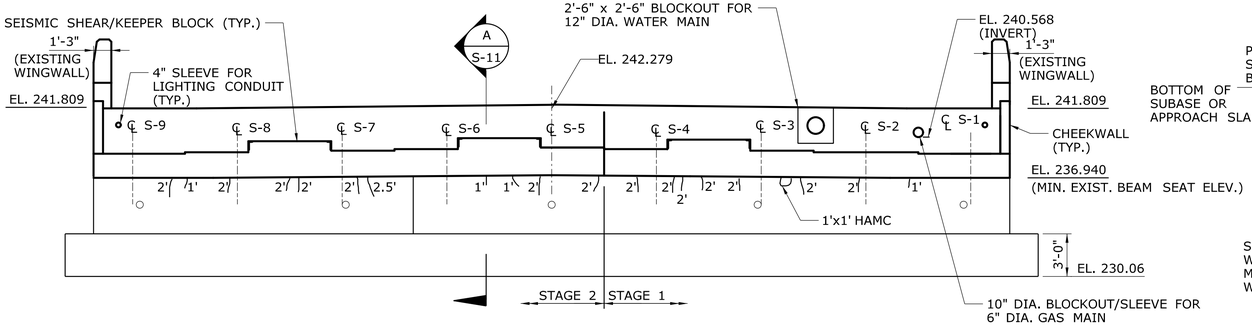

ELEVATION

SCALE: 3/16"=1'-0"

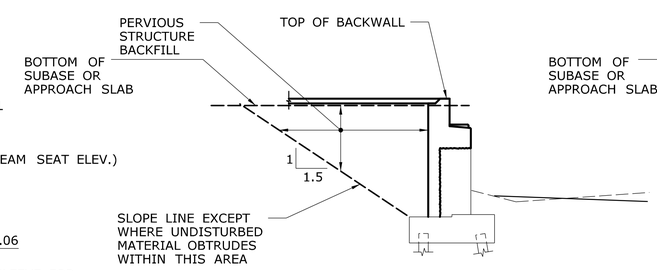

PAY LIMITS FOR ABUTMENT 1 BACKFILL

NOT TO SCALE

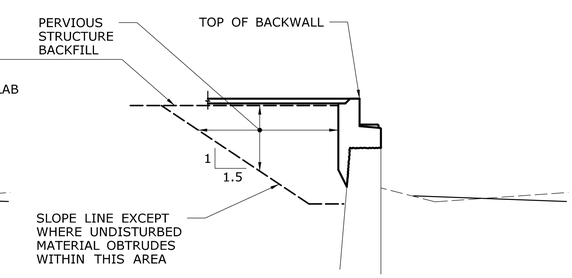

PAY LIMITS FOR ABUTMENT 2 BACKFILL

NOT TO SCALE

LEGEND:

HAMC	HOLLOW AREA WITH MAP CRACKING
X'	CRACK - X' LONG

ADDENDUM NO. 1

REV.	DATE	REVISION DESCRIPTION	SHEET NO.
1	11/11/15	REVISED NOTE	04.09.A1

THE INFORMATION, INCLUDING ESTIMATED QUANTITIES OF WORK, SHOWN ON THESE SHEETS IS BASED ON LIMITED INVESTIGATIONS BY THE STATE AND IS IN NO WAY WARRANTED TO INDICATE THE CONDITIONS OF ACTUAL QUANTITIES OF WORK WHICH WILL BE REQUIRED.

Plotted Date: 11/11/2015

DESIGNER/DRAFTER: CEB

CHECKED BY: BDB

SCALE AS NOTED

STATE OF CONNECTICUT
DEPARTMENT OF TRANSPORTATION

Filename: ...\S09-Sb.AbutPlan1.dgn

SIGNATURE/BLOCK:

STATE OF CONNECTICUT · YIHUI P. HU · No. 27080 · LICENSED PROFESSIONAL ENGINEER

CDR Group
2080 Silas Deane Highway
Rocky Hill, CT 06067

PROJECT TITLE:

REHABILITATION OF BRIDGE NO. 00596 OVER NAUGATUCK RIVER

TOWN: **NAUGATUCK**

DRAWING TITLE: **ABUTMENT 1 PLAN AND ELEVATION**

PROJECT NO. **87-142**

DRAWING NO. **S-09**

SHEET NO. **04.09.A1**

NOTES:

1. BEARING STIFFENERS ARE LOCATED AT THE ABUTMENTS AND PIERS AND SHALL BE PLACED SUCH THAT THEY ARE PLUMB AFTER APPLICATION OF FULL DEAD LOADS.
2. INTERMEDIATE STIFFENERS SHALL BE PLACED NORMAL TO THE FLANGES OF THE BEAM.
3. THE BEAM IS TO BE CAMBERED IN ACCORDANCE WITH THE TABLES ON DRAWING S-24.
4. THE ENDS OF THE BEAM ARE TO BE PLUMB AFTER APPLICATION OF FULL DEAD LOADS.
5. NO ATTACHMENT SHALL BE FILLET WELDED, PLUG WELDED OR TACK WELDED TO THE TOP FLANGE WITHIN THE TENSION ZONE INDICATED.
6. AT FASCIA GIRDERS S1 & S9, ENSURE THAT WEB SPLICE BOLT HEADS ARE ON THE EXPOSED FACE. FLANGE BOLT HEADS ARE TO BE ON OUTER FACES AS SHOWN.
7. ALL FIELD SPLICE BOLTS ARE "SLIP CRITICAL" WITH THREADS EXCLUDED FROM THE SHEAR PLANE. BOLTS ARE $\frac{7}{8}$" DIA. A325 IN STANDARD $\frac{15}{16}$" DIA. HOLES.
8. FOR ADDITIONAL STRUCTURAL STEEL NOTES SEE DRAWING S-26.

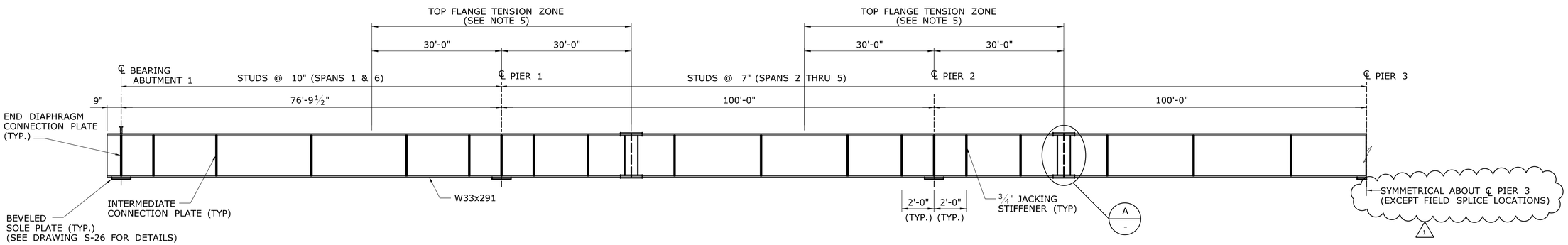

TYPICAL BEAM ELEVATION

NOT TO SCALE

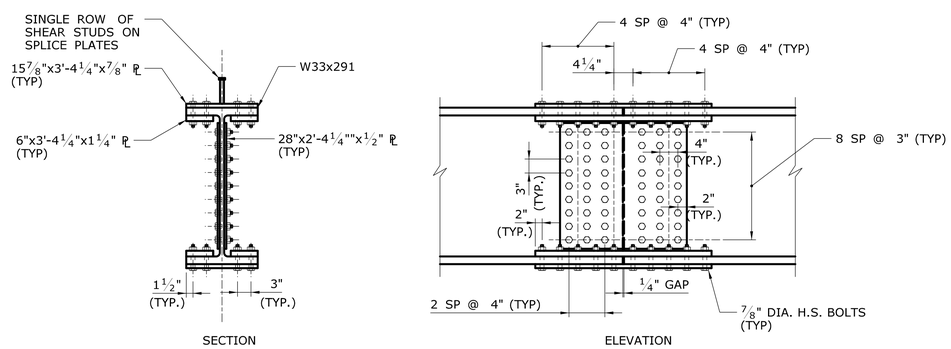

FIELD SPLICE DETAIL (A / -)

SCALE: ¾" = 1'-0"

NOTE: FOR LOCATION OF FIELD SPLICES SEE DWG. S-22

ADDENDUM NO. 1

REV.	DATE	REVISION DESCRIPTION	SHEET NO.
1	11/11/15	REVISED NOTE	04.23.A1

THE INFORMATION, INCLUDING ESTIMATED QUANTITIES OF WORK, SHOWN ON THESE SHEETS IS BASED ON LIMITED INVESTIGATIONS BY THE STATE AND IS IN NO WAY WARRANTED TO INDICATE THE CONDITIONS OF ACTUAL QUANTITIES OF WORK WHICH WILL BE REQUIRED.

Plotted Date: 11/10/2015

DESIGNER/DRAFTER: CEB
CHECKED BY: BDB
SCALE AS NOTED

STATE OF CONNECTICUT
DEPARTMENT OF TRANSPORTATION

Filename: ...\S23-Sb_BeamElev.dgn

SIGNATURE/BLOCK: STATE OF CONNECTICUT YIHUI P. HU No. 27096 LICENSED PROFESSIONAL ENGINEER
CDR Group
2080 Silas Deane Highway
Rocky Hill, CT 06067

PROJECT TITLE: REHABILITATION OF BRIDGE NO. 00596 OVER NAUGATUCK RIVER

TOWN: NAUGATUCK

DRAWING TITLE: GIRDER ELEVATION

PROJECT NO. 87-142
DRAWING NO. S-23
SHEET NO. 04.23.A1

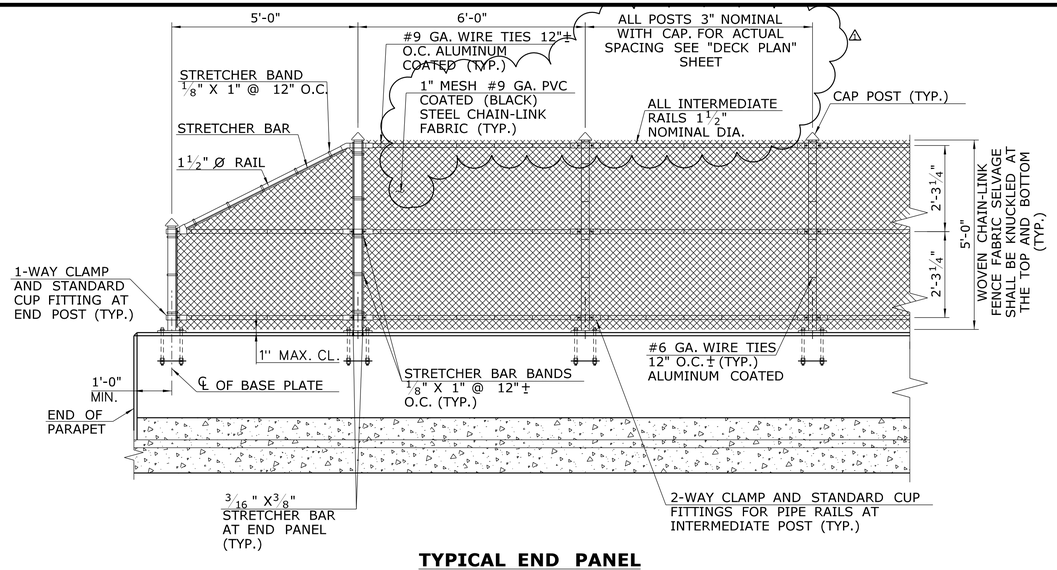

TYPICAL END PANEL

SCALE: 1/2" = 1'-0"

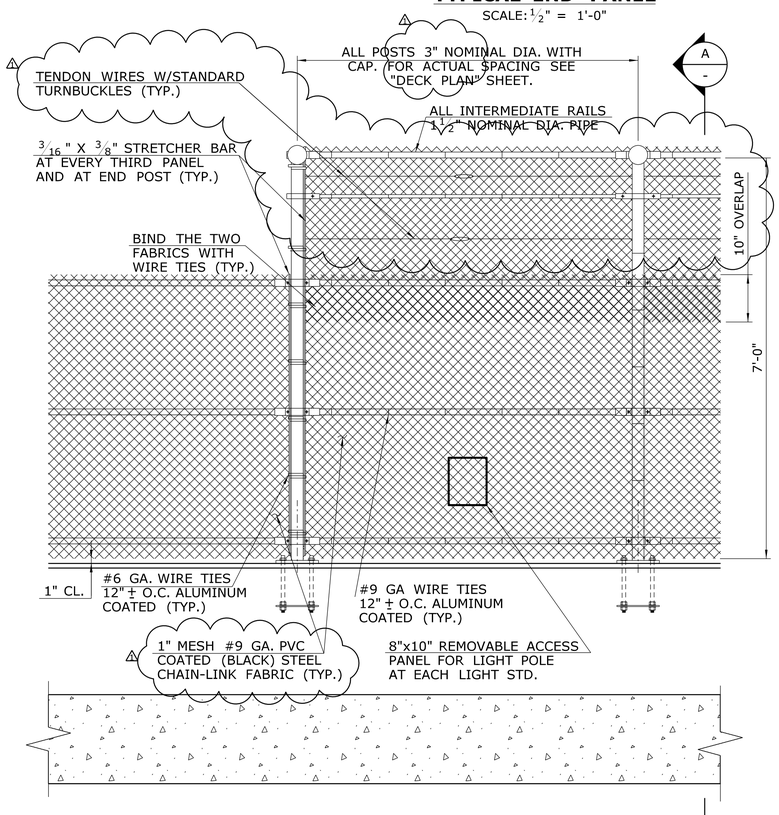

TYPICAL SIDEWALK 7' HIGH PANEL

SCALE: 3/4" = 1'-0"

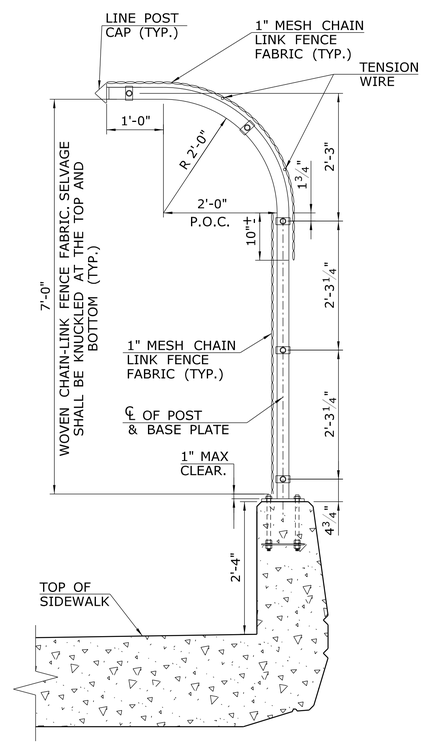

SECTION A -

SCALE: 3/4" = 1'-0"

NOTE:

1. REMOVABLE ACCESS PANELS IN FENCING SHALL BE CONTRACTOR DESIGNED AND ENGINEER REVIEWED, LOCKABLE, PRE-FABRICATED, AND INSTALLED IN FENCING PRIOR TO FENCE INSTALLATION.
2. CONTRACTOR SHALL FIELD MEASURE LOCATIONS OF THE LIGHT STANDARD PRIOR TO FABRICATION OF THE FENCE AND COORDINATE FABRICATION OF FENCING WITH LIGHT STANDARD LOCATIONS.
3. FIELD CUTTING OF FENCE WILL NOT BE ALLOWED.
4. SEE MATERIAL AND COATING NOTES ON S-35

ADDENDUM NO. 1

REV.	DATE	REVISION DESCRIPTION	SHEET NO.
1	11/11/15	REVISED MEMBER SIZES & COATING	04.34.A1

THE INFORMATION, INCLUDING ESTIMATED QUANTITIES OF WORK, SHOWN ON THESE SHEETS IS BASED ON LIMITED INVESTIGATIONS BY THE STATE AND IS IN NO WAY WARRANTED TO INDICATE THE CONDITIONS OF ACTUAL QUANTITIES OF WORK WHICH WILL BE REQUIRED.

Plotted Date: 11/10/2015

DESIGNER/DRAFTER: CEB
CHECKED BY: BDB
SCALE AS NOTED

STATE OF CONNECTICUT
DEPARTMENT OF TRANSPORTATION

Filename: ...\S34-Sb.ProtecScrn1.dgn

SIGNATURE/BLOCK:
CDR Group
2080 Silas Deane Highway
Rocky Hill, CT 06067
STATE OF CONNECTICUT · TIRUI P. WU · No. 27926 · LICENSED · PROFESSIONAL ENGINEER

PROJECT TITLE:
REHABILITATION OF BRIDGE NO. 00596 OVER NAUGATUCK RIVER

TOWN: NAUGATUCK

DRAWING TITLE: PROTECTIVE SCREEN 1

PROJECT NO. 87-142
DRAWING NO. S-34
SHEET NO. 04.34.A1

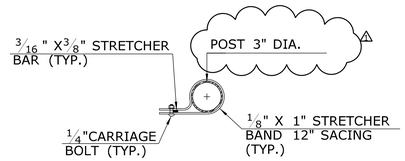

STRETCHER BAND POST CONNECTION

SCALE: 3" = 1' - 0"

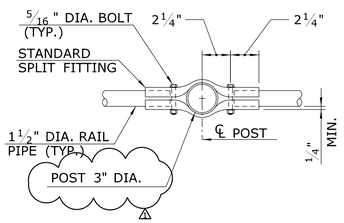

POST CONNECTION CLAMP

SCALE: 3" = 1' - 0"

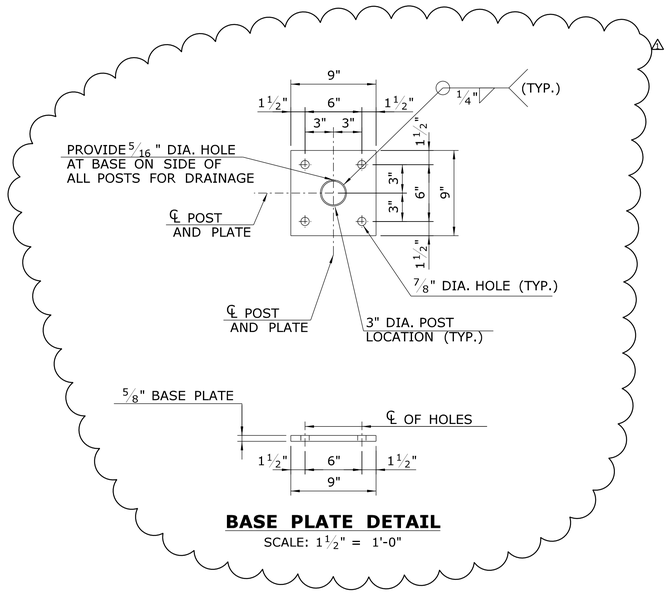

BASE PLATE DETAIL

SCALE: 1 1/2" = 1'-0"

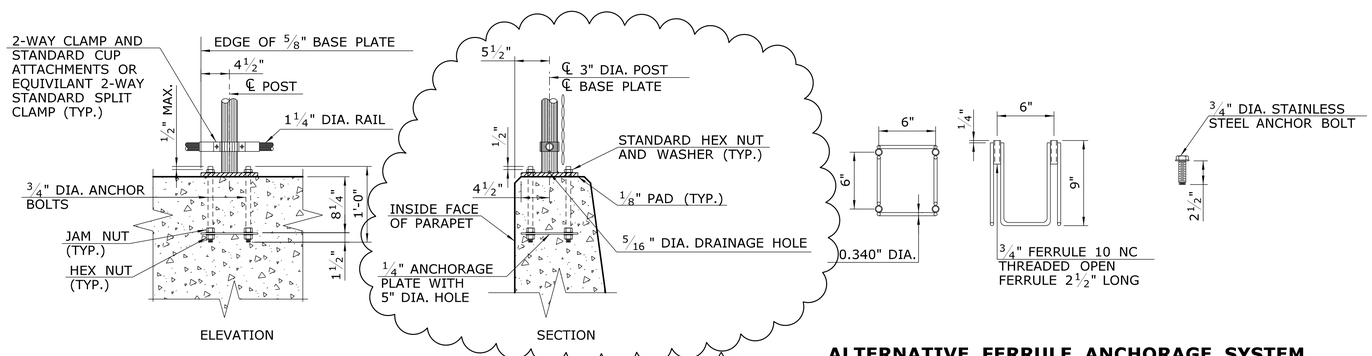

POST PRESET ANCHORAGE DETAILS WITH ANCHOR BOLT ALTERNATIVE SYSTEM

SCALE: 1" = 1'-0"

ALTERNATIVE FERRULE ANCHORAGE SYSTEM

SCALE: 1 1/2" = 1'-0"

NOTES:

MATERIALS:

THE BASE METAL OF THE CHAIN-LINK FENCE FABRIC, POSTS, RAILS, TIES, BARS, BANDS, AND ALL OTHER APPURTENANCES SHALL BE OF A GOOD COMMERICAL QUALITY OF GALVANIZED OR ALUMINUM COATED STEEL, AND SHALL CONFORM TO THE REQUIREMENTS OF AASHTO DESIGNATION M181 OR AS INDICATED HEREIN AND IN SPECIAL PROVISIONS.

CHAIN-LINK FENCE FABRIC SHALL BE NO.9 GAGE CORE WIRE, STEEL, 1 INCH MESH SIZE, DIAMOND SHAPED.

WIRE TIES SHALL BE STANDARD NO.9 GAGE FOR RAILS AND NO.6 GAGE FOR POSTS, ALUMINUM COATED AND SHALL CONFORM TO ASTM SPECIFICATION A112.

ALL POSTS, RAILS, CHAIN-LINK FABRIC, AND WIRE TIES SHALL BE PVC COATED (BLACK).

ALL POSTS AND RAILS SHALL BE STANDARD PIPE OF NOMINAL DIAMETER SIZES 3" AND 1 1/2", RESPECTIVELY AND SHALL CONFORM TO ASTM SPECIFICATION A53.

BASE AND PLATES SHALL CONFORM TO ASTM A36 GALVANIZED STEEL. ANCHOR BOLTS, WASHERS, AND HEX NUTS SHALL BE STAINLESS STEEL CONFORMING TO ASTMA193.

THE PRESET ANCHORAGE SHALL BE ASTM 108 GRADE 12 L14 FOR THE FERRULE MATERIAL AND ASTM A510 GRADE 1034 FOR THE STRUTS.

LIVE LOAD:

PEDESTRIAN RAILING LOADS, AASHTO 13.8.2.

CONSTRUCTION:

1. ALL POSTS, RAILS AND FENCING ARE TO FABRICATED AND ERECTED SO THAT THE RAILS ARE PARALLEL AND THE POSTS ARE TRULY VERTICAL.
2. EXPOSED SURFACES OF ASSEMBLED PROTECTIVE FENCE MATERIALS SHALL BE FREE OF BURRS AND SHARP EDGES AND SHALL BE OF ONE COLOR IN APPEARANCE.
3. EITHER OF THE ALTERNATIVE POST PRESET ANCHORAGE SYSTEMS MAY BE USED.
4. THE COST OF FURNISHING AND INSTALLING THE SELECTED ANCHORAGE SYSTEM INCLUDING ANCHOR BOLTS, HEX NUTS, WASHERS, SHIMS, AND PLATES SHALL BE INCLUDED IN THE PAYMENT ITEM "PROTECTIVE FENCE (5' HIGH)" OR "PROTECTIVE (7' HIGH) (CURVED)", AS APPROPRIATE.
5. ALL MEASUREMENTS SHALL BE FIELD VERIFIED BEFORE SHOP FABRICATION OF THE PROTECTIVE FENCE SYSTEM TO ENSURE PROPER FIT AND ALIGNMENT.
6. FOR FENCE POST SPACINGS, SEE DRAWING NO. S-30.

ADDENDUM NO. 1

REV.	DATE	REVISION DESCRIPTION	SHEET NO.
1	11/11/15	REVISED MEMBER SIZES & COATING	04.35.A1

THE INFORMATION, INCLUDING ESTIMATED QUANTITIES OF WORK, SHOWN ON THESE SHEETS IS BASED ON LIMITED INVESTIGATIONS BY THE STATE AND IS IN NO WAY WARRANTED TO INDICATE THE CONDITIONS OF ACTUAL QUANTITIES OF WORK WHICH WILL BE REQUIRED.

Plotted Date: 11/10/2015

DESIGNER/DRAFTER: CEB

CHECKED BY: BDB

SCALE AS NOTED

STATE OF CONNECTICUT
DEPARTMENT OF TRANSPORTATION

Filename: ...\S35-Sb.ProtecScrn2.dgn

SIGNATURE/BLOCK:

STATE OF CONNECTICUT — VIHUI P. HU — No. 27096 — LICENSED PROFESSIONAL ENGINEER

CDR Group
2080 Silas Deane Highway
Rocky Hill, CT 06067

PROJECT TITLE:

REHABILITATION OF BRIDGE NO. 00596 OVER NAUGATUCK RIVER

TOWN: **NAUGATUCK**

DRAWING TITLE: **PROTECTIVE SCREEN 2**

PROJECT NO. **87-142**

DRAWING NO. **S-35**

SHEET NO. **04.35.A1**

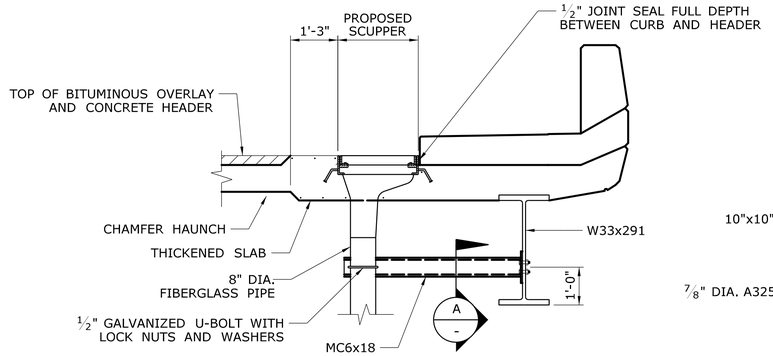

DECK SCUPPER DETAIL

SCALE: ½" = 1'-0"

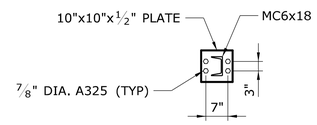

SECTION A / -

SCALE: ½"=1'-0"

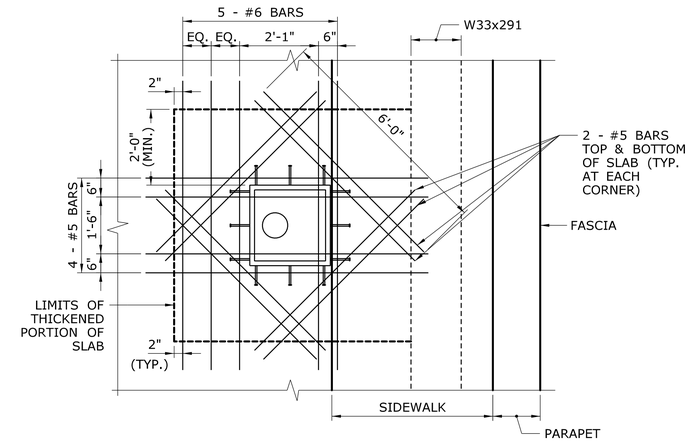

SCUPPER DECK REINFORCEMENT

SCALE: ½" = 1'-0"

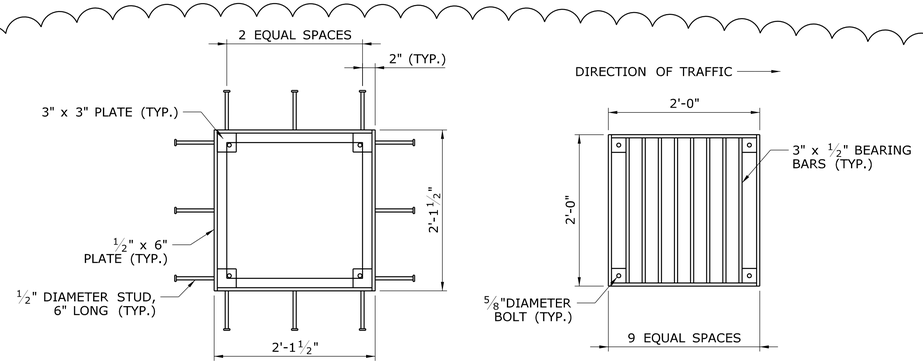

GRATE ASSEMBLY DETAIL

SCALE: 1" = 1'-0"

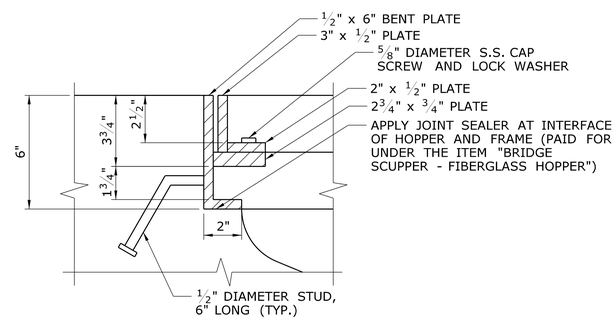

GRATE ANCHOR DETAIL

SCALE: 3" = 1'-0"

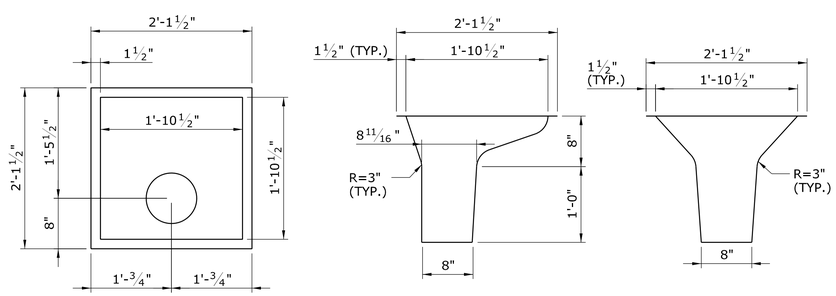

FIBERGLASS HOPPER DETAIL

SCALE: 1" = 1'-0"

ADDENDUM NO. 1

REV.	DATE	REVISION DESCRIPTION	SHEET NO.
1	11/11/15	ADD DETAILS	04.37.A1

THE INFORMATION, INCLUDING ESTIMATED QUANTITIES OF WORK, SHOWN ON THESE SHEETS IS BASED ON LIMITED INVESTIGATIONS BY THE STATE AND IS IN NO WAY WARRANTED TO INDICATE THE CONDITIONS OF ACTUAL QUANTITIES OF WORK WHICH WILL BE REQUIRED.

Plotted Date: 11/11/2015

DESIGNER/DRAFTER: CEB

CHECKED BY: BDB

SCALE AS NOTED

STATE OF CONNECTICUT
DEPARTMENT OF TRANSPORTATION

Filename: ...\S37-Sb.Misc1.dgn

SIGNATURE/BLOCK:

STATE OF CONNECTICUT — VINOD P. PAI — No. 37096 — LICENSED PROFESSIONAL ENGINEER

CDR Group
2080 Silas Deane Highway
Rocky Hill, CT 06067

PROJECT TITLE:

REHABILITATION OF BRIDGE NO. 00596 OVER NAUGATUCK RIVER

TOWN: **NAUGATUCK**

DRAWING TITLE: **MISCELLANEOUS 1**

PROJECT NO. **87-142**

DRAWING NO. **S-37**

SHEET NO. **04.37.A1**