04 - STRUCTURES
INDEX OF DRAWINGS

DRAWING NUMBER	DRAWING TITLE	DRAWING NUMBER	DRAWING TITLE
S-01	INDEX OF DRAWINGS	S-21	SLAB PLAN
S-02	GENERAL PLAN	S-22	SLAB DETAILS - 1
S-03	GENERAL NOTES & QUANTITIES	S-23	SLAB DETAILS - 2
S-04	BORING LOGS - 1	S-24	RAILING ATTACHMENT DETAILS
S-05	BORING LOGS - 2	S-25	METAL BRIDGE RAIL - HANDRAIL
S-06	BORING LOGS - 3		
S-07	WATER HANDLING PLAN		
S-08	PILE PLAN		
S-09	ABUTMENT 1		
S-10	ABUTMENT 2		
S-11	ABUTMENT DETAILS - 1		
S-12	ABUTMENT DETAILS - 2		
S-13	ABUTMENT DETAILS - 3		
S-14	ABUTMENT DETAILS - 4		
S-15	PAY LIMITS		
S-16	FRAMING PLAN		
S-17	BEAM DETAILS - 1		
S-18	BEAM DETAILS - 2		
S-19	BEAM DETAILS - 3		
S-20	BEAM DETAILS - 4		

DESIGNED BY:

Stantec

STANTEC CONSULTING SERVICES INC.
55 CHURCH STREET, SUITE 601
NEW HAVEN, CT 06510

STATE OF CONNECTICUT
ANDREW M. LESSARD
Andrew M. Lessard
2015.07.29
15:59:44-04'00'

REV.	DATE	REVISION DESCRIPTION	SHEET NO.
-	-	-	-
-	-	-	-
-	-	-	-
-	-	-	-
-	-	-	-
-	-	-	-

THE INFORMATION, INCLUDING ESTIMATED QUANTITIES OF WORK, SHOWN ON THESE SHEETS IS BASED ON LIMITED INVESTIGATIONS BY THE STATE AND IS IN NO WAY WARRANTED TO INDICATE THE CONDITIONS OF ACTUAL QUANTITIES OF WORK WHICH WILL BE REQUIRED.

Plotted Date: 7/29/2015

DESIGNER/DRAFTER: JRA
CHECKED BY: AML

STATE OF CONNECTICUT
DEPARTMENT OF TRANSPORTATION

Filename: ...\S-01 INDEX OF DRAWINGS.dgn

SIGNATURE/BLOCK:
Stantec Consulting Services Inc.
55 Church Street
Suite 601
New Haven, CT 06510

PROJECT TITLE:
REPLACEMENT OF BRIDGE NO. 01018, ROUTE 53 OVER SAUGATUCK RIVER

TOWN: REDDING

DRAWING TITLE: INDEX OF DRAWINGS

PROJECT NO. 116-133
DRAWING NO. S-01
SHEET NO. 04.01

Connecticut Department of Transportation
QA/QC Format Check

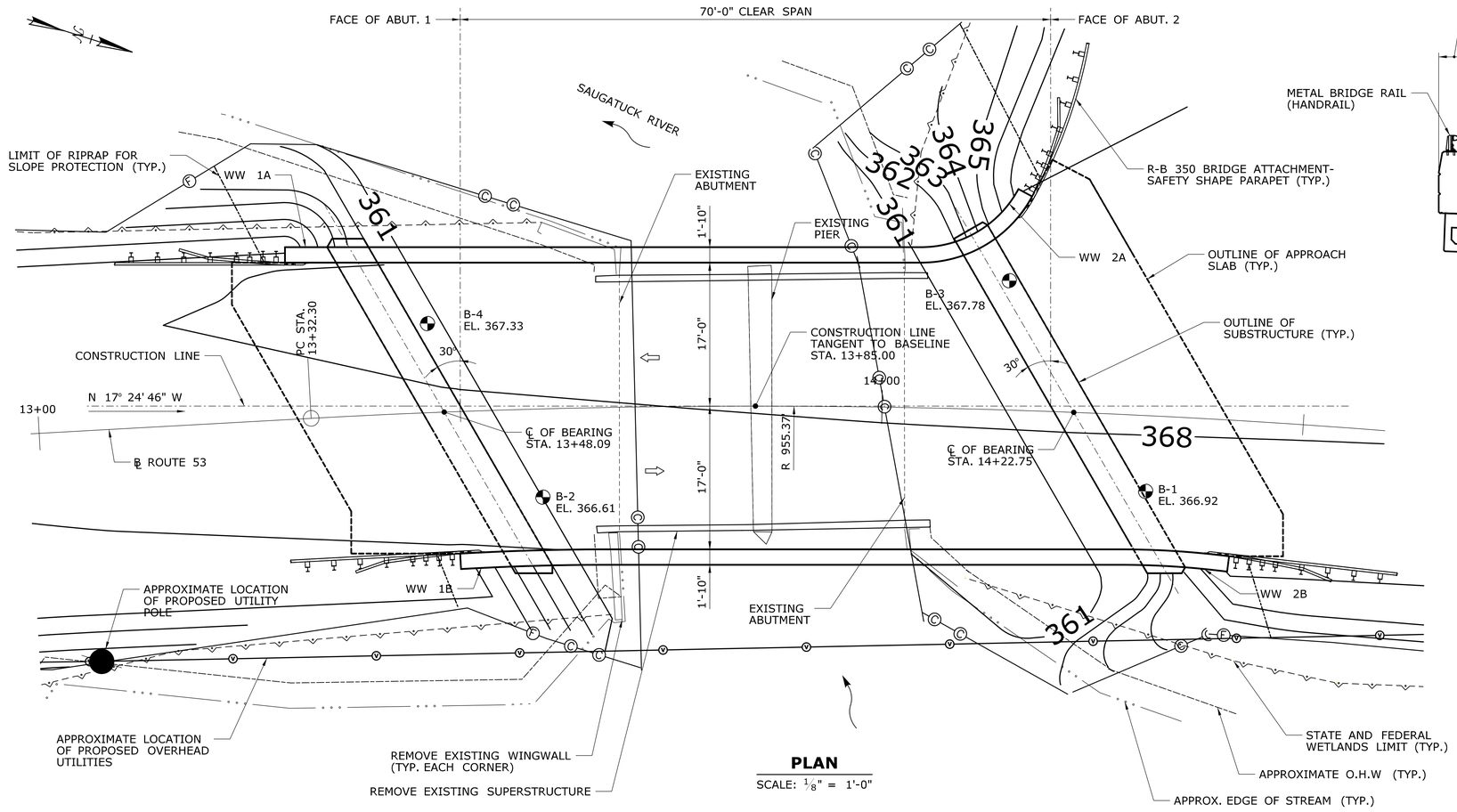

PLAN

SCALE: 1/8" = 1'-0"

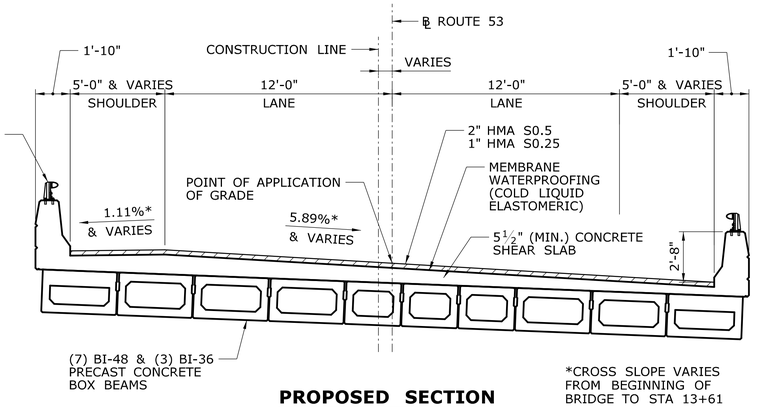

*CROSS SLOPE VARIES FROM BEGINNING OF BRIDGE TO STA 13+61

PROPOSED SECTION

SCALE: 1/4" = 1'-0"

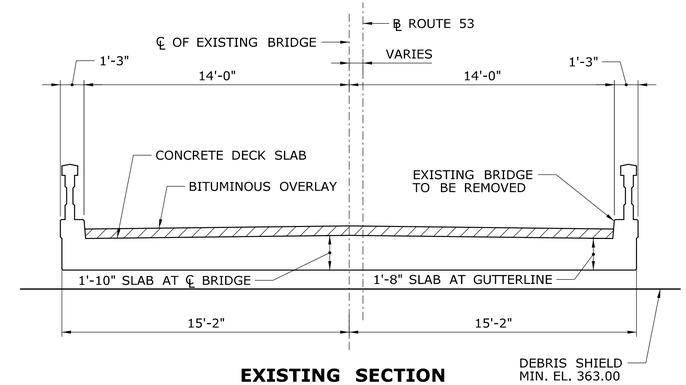

EXISTING SECTION

SCALE: 1/4" = 1'-0"

HYDRAULIC DATA	
DRAINAGE AREA	14.5 SQ. MI.
DESIGN FREQUENCY	100-YEAR
DESIGN DISCHARGE	2000 CFS
AVERAGE DAILY FLOW	25.70 CFS
AVERAGE DAILY FLOW WSE	361.70
UPSTREAM DESIGN WSE	366.51
DOWNSTREAM DESIGN WSE	365.90
MAXIMUM SCOUR EL	346.84
FREQUENCY	100-YEAR
DISCHARGE	2000 CFS
WORST CASE SUBSTRUCTURE UNIT	ABUTMENT 1

CONCRETE DISTRIBUTION		
Superstructure	C.Y.	210
Substructure	C.Y.	30
Footings	C.Y.	-
Total	C.Y.	-

NOTE: CONCRETE DISTRIBUTION DOES NOT INCLUDE PRECAST CONCRETE ELEMENTS.

INSPECTION OF FIELD WELDS		
METHODS	UNIT	QUANTITY
Ultrasonic	inch	none
Magnetic Particle	feet	none

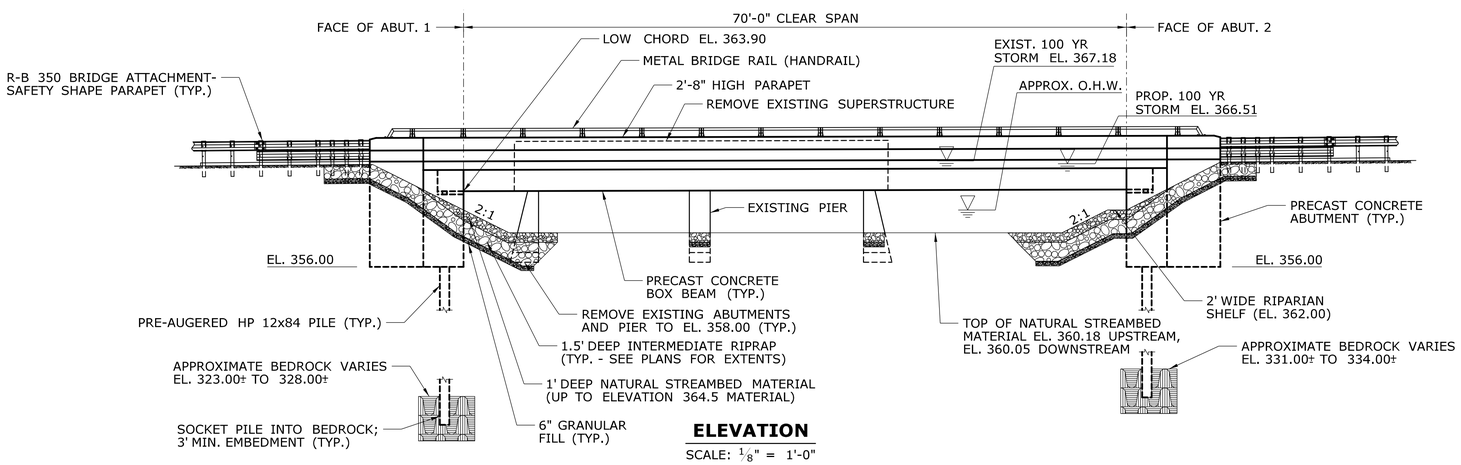

ELEVATION

SCALE: 1/8" = 1'-0"

NOTICE TO BRIDGE INSPECTORS

The Department's Bridge Safety procedures require this bridge to be inspected for, but not limited to, all appropriate components indicated in the governing manuals for bridge inspection. Attention must be given to inspecting the following special components and details. (The listing for components for specific attention shall not be construed to reduce the importance of inspection of any other component of the structure.) The frequency of inspection of this structure shall be in accordance with the governing manuals for bridge inspection, unless otherwise directed by the Manager of Bridge Safety and Evaluation.

Component or Detail	Structure Sheet Reference
-	-
-	-

REV.	DATE	REVISION DESCRIPTION	SHEET NO.
-	-	-	-
-	-	-	-
-	-	-	-
-	-	-	-
-	-	-	-
-	-	-	-

THE INFORMATION, INCLUDING ESTIMATED QUANTITIES OF WORK, SHOWN ON THESE SHEETS IS BASED ON LIMITED INVESTIGATIONS BY THE STATE AND IS IN NO WAY WARRANTED TO INDICATE THE CONDITIONS OF ACTUAL QUANTITIES OF WORK WHICH WILL BE REQUIRED.

Plotted Date: 7/29/2015

DESIGNER/DRAFTER: JRA

CHECKED BY: AML

SCALE AS NOTED

STATE OF CONNECTICUT
DEPARTMENT OF TRANSPORTATION

Filename: ...\S-02 GENERAL PLAN.dgn

SIGNATURE/BLOCK:

Stantec Consulting Services Inc.
55 Church Street
Suite 601
New Haven, CT 06510

PROJECT TITLE:

REPLACEMENT OF BRIDGE NO. 01018, ROUTE 53 OVER SAUGATUCK RIVER

TOWN: **REDDING**

DRAWING TITLE: **GENERAL PLAN**

PROJECT NO. **116-133**

DRAWING NO. **S-02**

SHEET NO. **04.02**

TABLE OF BRIDGE QUANTITIES

ITEM	UNIT	QUANTITY
STRUCTURE EXCAVATION - EARTH (EXCLUDING COFFERDAM AND DEWATERING)	CY	434
GRANULAR FILL	CY	9
COFFERDAM AND DEWATERING	LF	505
PERVIOUS STRUCTURE BACKFILL	CY	277
HMA S0.5	TON	53
HMA S0.25	TON	27
REMOVAL OF SUPERSTRUCTURE	LS	LS
PRESTRESSED DECK UNITS (3'-0" X 2'-3")	LF	227
PRESTRESSED DECK UNITS (4'-0" X 2'-3")	LF	530
ELASTOMERIC BEARING PADS	CI	10580
CLASS "F" CONCRETE	CY	246
PRECAST SUBSTRUCTURE ELEMENTS	LS	LS
1" PREFORMED EXPANSION JOINT FILLER FOR BRIDGES	SF	37
DEFORMED STEEL BARS	LB	1700
DEFORMED STEEL BARS (EPOXY COATED)	LB	25400
FURNISHING STEEL PILES	LB	40000
PRE-AUGERING OF PILES	LF	691
DRIVING STEEL PILES	LF	605
TEST PILE (STEEL HP 12 X 84 - 50' LONG)	EA	2
DRILL ROCK SOCKET FOR PILE FOUNDATIONS	LF	48
MEMBRANE WATERPROOFING (COLD LIQUID ELASTOMERIC)	SY	455
DAMPPROOFING	SY	154
METAL BRIDGE RAIL (HANDRAIL)	LF	175
REMOVAL OF EXISTING MASONRY	CY	91

WORKING POINTS

POINT	LOCATION	NORTH	EAST
WP-1	℄ BEARING ABUTMENT 1 - CONSTRUCTION LINE	178157.44	414754.71
WP-2	℄ BEARING ABUTMENT 2 - CONSTRUCTION LINE	178228.64	414732.38
WP-3	CONSTRUCTION LINE TANGENT TO ℄ ROUTE 53	178193.04	414743.55
WP-4	℄ BEARING ABUTMENT 1 - EDGE OF ABUTMENT	178140.58	414739.22
WP-5	℄ BEARING ABUTMENT 1 - EDGE OF ABUTMENT	178174.30	414770.21
WP-6	℄ BEARING ABUTMENT 2 - EDGE OF ABUTMENT	178210.93	414716.10
WP-7	℄ BEARING ABUTMENT 2 - EDGE OF ABUTMENT	178245.50	414747.88
WP-8	℄ BEARING ABUTMENT 1 - ℄ ROUTE 53	178158.05	414755.27
WP-9	℄ BEARING ABUTMENT 2 - ℄ ROUTE 53	178229.27	414732.97
WP-10	END OF APPROACH SLAB - CONSTRUCTION LINE	178140.43	414760.05
WP-11	END OF APPROACH SLAB - CONSTRUCTION LINE	178245.65	414727.05
WP-12	END OF WINGWALL 1A	178134.18	414742.27
WP-13	END OF WINGWALL 1B	178165.52	414772.44
WP-14	END OF WINGWALL 2A	178215.10	414709.68
WP-15	END OF WINGWALL 2B	178252.28	414745.56

SPECIFICATIONS: CONNECTICUT DEPARTMENT OF TRANSPORTATION FORM 816 (2004), SUPPLEMENTAL SPECIFICATIONS DATED JANUARY 2015 AND SPECIAL PROVISIONS.

DESIGN SPECIFICATIONS: LRFD BRIDGE DESIGN SPECIFICATIONS (AASHTO - 2003), WITH INTERIM SPECIFICATIONS UP TO AND INCLUDING 2008, AS SUPPLEMENTED BY THE CONNECTICUT DEPARTMENT OF TRANSPORTATION BRIDGE DESIGN MANUAL (2003).

ALLOWABLE DESIGN STRESSES:

CLASS "F" CONCRETE:
BASED ON f'c = 4,000 psi

THE SPECIFIED CONCRETE STRENGTH USED IN DESIGN, f'c, OF THE CONCRETE COMPONENTS IS NOTED ABOVE. THE MINIMUM COMPRESSIVE STRENGTH OF THE CONCRETE IN THE CONSTRUCTED COMPONENTS SHALL CONFORM TO THE REQUIREMENTS OF SECTION 6.01-CONCRETE FOR STRUCTURES.

REINFORCEMENT:
ASTM A615 GRADE 60
Fy = 60,000 psi

STRUCTURAL STEEL:
AASHTO M270 GRADE 50
Fy = 50,000 psi

PRESTRESSED CONCRETE FOR BOX BEAMS:
SEE DRAWING S-16

LIVE LOAD: HL-93 DESIGN VEHICLE
CT-L73.0 LEGAL VEHICLE
CT-L3S2 LEGAL VEHICLE
CT-P76.5 PERMIT VEHICLE
CT-P204 PERMIT VEHICLE
CT-P204a-f PERMIT VEHICLES
CT-P380 PERMIT VEHICLE
CT-TLC PERMIT VEHICLE

FUTURE PAVING ALLOWANCE: NONE

BITUMINOUS CONCRETE OVERLAY: THIS SHALL CONSIST OF TWO LIFTS. THE FIRST SHALL BE HMA S0.25 (1" THICK) AND THE SECOND SHALL BE HMA S0.5 (2" THICK).

FOUNDATION PRESSURES: THE VARIOUS GROUP LOADINGS NOTED ON THE SUBSTRUCTURE PLAN SHEETS REFER TO THE GROUP LOADS AS GIVEN IN THE AASHTO LRFD GUIDE SPECIFICATIONS.

DIMENSIONS: WHEN DECIMAL DIMENSIONS ARE GIVEN TO LESS THAN THREE DECIMAL PLACES, THE OMITTED DIGITS SHALL BE ASSUMED TO BE ZEROS.

COMPOSITE CONSTRUCTION: NO TEMPORARY INTERMEDIATE SUPPORTS SHALL BE USED PRIOR TO AND DURING THE PLACING AND SETTING OF THE CONCRETE DECK SHEAR SLAB. CONSTRUCTION LOADS AND DEAD LOADS WILL BE PERMITTED WHEN DIRECTED BY THE ENGINEER BUT ONLY WHEN THE CONCRETE HAS REACHED A STRENGTH OF f'c = 3,500 PSI. LIVE LOADS (TRAFFIC) WILL BE PERMITTED ON THE STRUCTURE AFTER THE CONCRETE HAS REACHED A STRENGTH OF f'c = 4,000 PSI.

CLASS "F" CONCRETE: CLASS "F" CONCRETE SHALL BE USED FOR SHEAR SLAB, PARAPETS, APPROACH SLABS, BACKWALLS, PILE SOCKETS AND PRECAST SUBSTRUCTURE ELEMENTS.

JOINT SEAL: SEE SPECIAL PROVISIONS.

EXPOSED EDGES: EXPOSED EDGES OF CONCRETE SHALL BE BEVELED 1" x 1" UNLESS DIMENSIONED OTHERWISE.

CONCRETE COVER: ALL REINFORCEMENT SHALL HAVE TWO INCHES COVER UNLESS DIMENSIONED OTHERWISE.

REINFORCEMENT: ALL REINFORCEMENT SHALL BE ASTM A615 GRADE 60.

EPOXY COATED REINFORCING BARS: ALL REINFORCEMENT, EXCEPT STRANDS, IN THE ADJACENT PRECAST CONCRETE BOX BEAMS SHALL BE EPOXY COATED AND INCLUDED IN THE ITEM FOR "PRESTRESSED DECK UNITS (3'-0" x 2'-3")" AND "PRESTRESSED DECK UNITS (4'-0" x 2'-3")" AS APPLICABLE. ALL REINFORCEMENT IN THE SUPERSTRUCTURE INCLUDING THE CONCRETE DECK SHEAR SLAB, INTEGRAL BACKWALLS, AND THE PARAPETS SHALL BE EPOXY COATED UNLESS OTHERWISE NOTED. THESE BARS SHALL BE INCLUDED IN THE PAY ITEM FOR "DEFORMED STEEL BARS (EPOXY COATED)."

ALL REINFORCEMENT IN THE TOP MAT OF THE CONCRETE APPROACH SLABS SHALL BE EPOXY COATED. THESE BARS SHALL BE INCLUDED IN THE ITEM "DEFORMED STEEL BARS (EPOXY COATED)."

PREFORMED EXPANSION JOINT FILLER: THE COST OF FURNISHING AND INSTALLING PREFORMED EXPANSION JOINT FILLER SHALL BE INCLUDED IN THE COST OF THE ITEM '1" PREFORMED EXPANSION JOINT FILLER FOR BRIDGES'.

CLOSED CELL ELASTOMER: THE COST OF FURNISHING AND INSTALLING CLOSED CELL ELASTOMER SHALL BE INCLUDED IN THE COST OF THE ITEM "CLASS 'F' CONCRETE."

CONSTRUCTION JOINTS: CONSTRUCTION JOINTS, OTHER THAN THOSE SHOWN ON THE PLANS, WILL NOT BE PERMITTED WITHOUT THE PRIOR APPROVAL OF THE ENGINEER.

BRIDGE IDENTIFICATION PLACARDS: THE CONTRACTOR SHALL PROVIDE AND INSTALL NEW BRIDGE IDENTIFICATION SIGNS AT THE LEADING END OF EACH BRIDGE PARAPET ON THE TRAFFIC SIDE. THE SIGNS SHALL BE FABRICATED WITH 40 GAUGE ALUMINUM SHEET METAL. THE SIGNS SHALL BE 4" x 12" WITH 3" WHITE REFLECTIVE BLOCK LETTERS ON GREEN REFLECTIVE SHEETING. EACH SIGN SHALL READ: "01018". ALL COSTS ASSOCIATED WITH PROVIDING AND INSTALLING THE BRIDGE SIGNS SHALL BE COVERED UNDER THE ITEM "SIGN FACE SHEET ALUMINUM (TYPE III REFLECTIVE SHEETING)." THE FINAL LOCATION AND ATTACHMENT METHOD FOR THE SIGNS SHALL BE APPROVED BY THE ENGINEER PRIOR TO INSTALLATION.

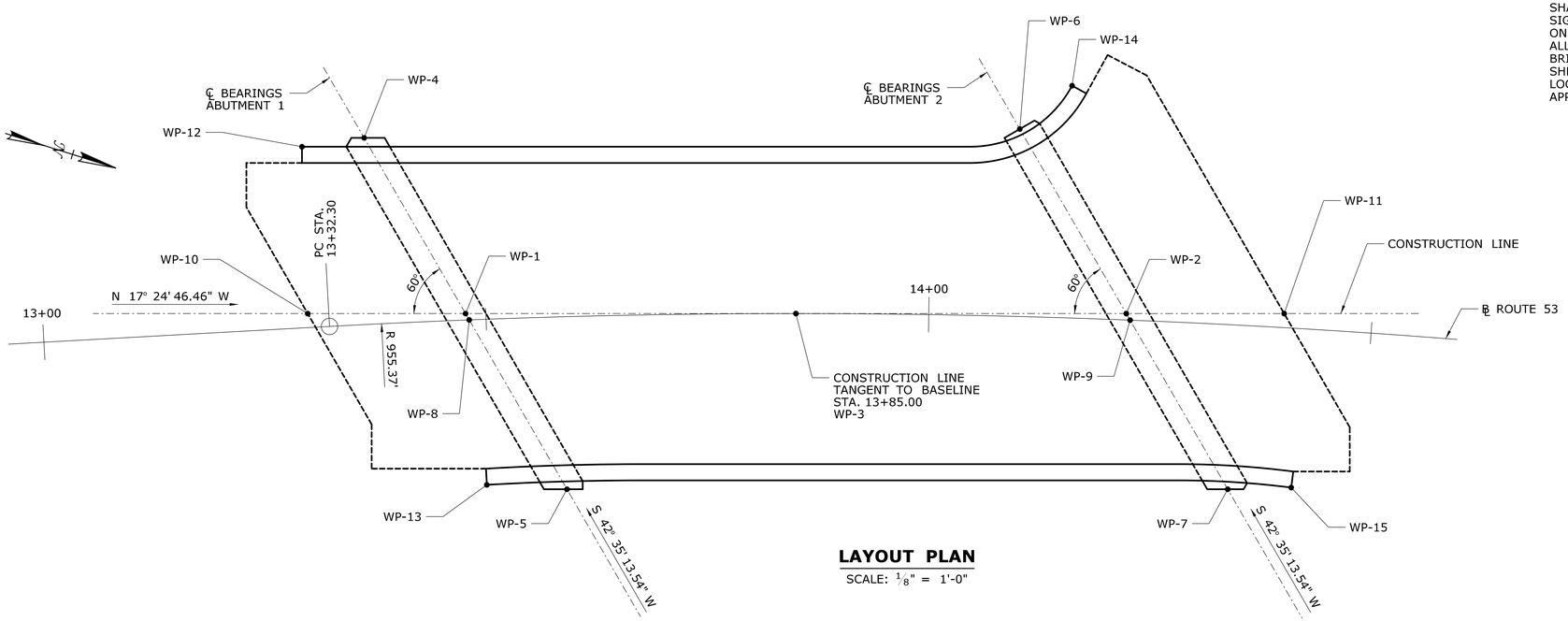

LAYOUT PLAN
SCALE: 1/8" = 1'-0"

REV.	DATE	REVISION DESCRIPTION	SHEET NO.
-	-	-	-
-	-	-	-
-	-	-	-
-	-	-	-
-	-	-	-
-	-	-	-

THE INFORMATION, INCLUDING ESTIMATED QUANTITIES OF WORK, SHOWN ON THESE SHEETS IS BASED ON LIMITED INVESTIGATIONS BY THE STATE AND IS IN NO WAY WARRANTED TO INDICATE THE CONDITIONS OF ACTUAL QUANTITIES OF WORK WHICH WILL BE REQUIRED.

Plotted Date: 7/29/2015

DESIGNER/DRAFTER: JRA
CHECKED BY: AML
SCALE AS NOTED

STATE OF CONNECTICUT
DEPARTMENT OF TRANSPORTATION

Filename: ...\S-03 GENERAL NOTES & QUANTITIES.dgn

SIGNATURE/BLOCK:
Stantec Consulting Services Inc.
55 Church Street
Suite 601
New Haven, CT 06510

PROJECT TITLE:
REPLACEMENT OF BRIDGE NO. 01018, ROUTE 53 OVER SAUGATUCK RIVER

TOWN: **REDDING**

DRAWING TITLE: **GENERAL NOTES & QUANTITIES**

PROJECT NO. 116-133
DRAWING NO. S-03
SHEET NO. 04.03

B-1

Driller: Jaime Lloret	Connecticut DOT Boring Report		Hole No.: B-1
Inspector: R. Beniwal	Town: Redding		Stat./Offset: 14+31.73/8.98 RT
Soil Engr: Applied Earth Tech.	Project No.: 116-133		Northing: 178240.21
Start Date: 10-30-13	Location: Route 53		Easting: 414739.35
Finish Date: 10-30-13	Bridge No.: 01018		Surface Elevation: 366.92
Project Description: Rt 53 over Saugatuck River			Prime Engineer: Santec
Casing Size/Type: 3.25 in HA	Sampler Type/Size: SS 2.0 in		Core Barrel Type: 2 in NX
Hammer Wt.: Fall: in.	Hammer Wt.: 140 Fall: 30in.		Boring Co: Associated Boring Co.
Groundwater Observations: @5.5 ft			

SAMPLES

Depth (ft)	Sample Type/No.	Blows on Sampler per 6 inches	Pen. (in.)	Rec. (in.)	RQD %	Generalized Strata Description	Material Description and Notes	Elevation (ft)
0						ASPHALT	8 in Asphalt over 10 in gravel base	
	S-1	22 15 9 8	24	5		ROADWAY BASE	Brown black fine coarse SAND, some fine coarse gravel, little silt, occasional cobbles and boulders,fill.	365
	S-2	7 5 8 4	24	7		BROWN FC SAND SOME FC GRAVEL, FILL		
5	S-3	14 9 1 2	24	10			Brown fine coarse SAND, some fine coarse gravel, little silt, fill.	360
	S-4	3 6 5 6	24	14		DARK BRN ORGANIC F SAND & SILT	Dark brown organic fine SAND and silt.	
10	S-5	W 1 2 3	24	4				
	S-6	5 2 2 3	24	2		GRAY BROWN FC SAND & FC GRAVEL LTL SILT	Gray brown fine coarse SAND, little to some fine coarse gravel, trace to little silt, occasional fine coarse SAND layers.	355
15	S-7	2 5 5 7	24	6				350
20	S-8	7 10 3 2	24	3			Gray brown fine coarse SAND, little to and fine coarse gravel, trace to little silt.	345
25	S-9	19 61 100	18	4		GRAY BROWN FC GRAVEL & FC SAND	Gray brown fine coarse GRAVEL and fine coarse sand, trace silt, occasional boulders	340
30	S-10	7 15 17 17	24	6				335
35								

Sample Type: S = Split Spoon C = Core UP = Undisturbed Piston V = Vane Shear Test
Proportions Used: Trace = 1 - 10%, Little = 10 - 20%, Some = 20 - 35%, And = 35 - 50%

Total Penetration in Earth: 33ft Rock: 10ft	NOTES: CME-55 Truck Mounted Rig was used. 33.0-38.0 ft Coring time 5,5,6,6 and 6 min/ft. 38.0-43.0 ft Coring time 5,5,5,6 and 8 min/ft.	Sheet 1 of 2
No. of Soil Samples: 9 No. of Core Runs: 2		SM-001-AETrev.9/09

B-1 (CONTINUED)

Driller: Jaime Lloret	Connecticut DOT Boring Report		Hole No.: B-1
Inspector: R. Beniwal	Town: Redding		Stat./Offset: 14+31.73/8.98 RT
Soil Engr: Applied Earth Tech.	Project No.: 116-133		Northing: 178240.21
Start Date: 10-30-13	Location: Route 53		Easting: 414739.35
Finish Date: 10-30-13	Bridge No.: 01018		Surface Elevation: 366.92
Project Description: Rt 53 over Saugatuck River			Prime Engineer: Santec
Casing Size/Type: 3.25 in HA	Sampler Type/Size: SS 2.0 in		Core Barrel Type: 2 in NX
Hammer Wt.: Fall: in.	Hammer Wt.: 140 Fall: 30in.		Boring Co: Associated Boring Co.
Groundwater Observations: @5.5 ft			

SAMPLES

Depth (ft)	Sample Type/No.	Blows on Sampler per 6 inches	Pen. (in.)	Rec. (in.)	RQD %	Generalized Strata Description	Material Description and Notes	Elevation (ft)
35	C-1		60	52	46	BEDROCK GRAY WHITE PINK DOLOMITE MARBLE OVER GRAY GNEISS (con't)	Gray white pink, fractured, fine to medium grained, dolomite MARBLE over gray GNEISS.	330
40	C-2		60	54	36		Gray, fractured, fine to medium grained, GNEISS.	325
							END OF BORING 43ft	
45								320
50								315
55								310
60								305
65								300
70								

Sample Type: S = Split Spoon C = Core UP = Undisturbed Piston V = Vane Shear Test
Proportions Used: Trace = 1 - 10%, Little = 10 - 20%, Some = 20 - 35%, And = 35 - 50%

Total Penetration in Earth: 33ft Rock: 10ft	NOTES: CME-55 Truck Mounted Rig was used. 33.0-38.0 ft Coring time 5,5,6,6 and 6 min/ft. 38.0-43.0 ft Coring time 5,5,5,6 and 8 min/ft.	Sheet 2 of 2
No. of Soil Samples: 9 No. of Core Runs: 2		SM-001-AETrev.9/09

B-2

Driller: Jaime Lloret	Connecticut DOT Boring Report		Hole No.: B-2
Inspector: R. Beniwal	Town: Redding		Stat./Offset: 13+59.52/10.46 RT
Soil Engr: Applied Earth Tech.	Project No.: 116-133		Northing: 178172.23
Start Date: 10-29-13	Location: Route 53		Easting: 414761.39
Finish Date: 10-29-13	Bridge No.: 01018		Surface Elevation: 366.61
Project Description: Rt 53 over Saugatuck River			Prime Engineer: Santec
Casing Size/Type: 3.25 in HA	Sampler Type/Size: SS 2.0 in		Core Barrel Type: 2 in NX
Hammer Wt.: Fall: in.	Hammer Wt.: 140 Fall: 30in.		Boring Co: Associated Boring Co.
Groundwater Observations: @6.0 ft			

SAMPLES

Depth (ft)	Sample Type/No.	Blows on Sampler per 6 inches	Pen. (in.)	Rec. (in.)	RQD %	Generalized Strata Description	Material Description and Notes	Elevation (ft)
0						ASPHALT	7 in Asphalt over 11 in gravel base.	
	S-1	30 20 10	18	4		ROADWAY BASE	Brown fine coarse SAND, some fine coarse gravel, little silt, occasional cobbles and boulders,fill.	365
	S-2	19 14 39 3	24	4		BROWN FC SAND SOME FC GRAVEL, FILL		
5	S-3	6 1 1 1	24	9			Dark brown organic fine SAND and silt.	360
	S-4	2 7 7 9	24	12		DARK BRN ORGANIC F SAND & SILT	Dark brown organic fine SAND and silt.	
10	S-5	8 16 17 19	24	8		GRAY BROWN FC SAND & FC GRAVEL LTL SILT	Gray brown fine coarse SAND and fine coarse gravel, trace to little silt.	355
15	S-6	19 19 19 15	24	4				350
20	S-7	6 7 6 10	24	12			Gray brown fine coarse SAND, some fine coarse gravel, trace to little silt.	345
25	S-8	14 12 13 12	24	12				340
30	S-9	13 16 12 6	24	10			Gray brown fine coarse SAND, and fine coarse gravel, trace silt with layers gray fine coarse SAND.	335
35								

Sample Type: S = Split Spoon C = Core UP = Undisturbed Piston V = Vane Shear Test
Proportions Used: Trace = 1 - 10%, Little = 10 - 20%, Some = 20 - 35%, And = 35 - 50%

Total Penetration in Earth: 43.5ft Rock: 8.5ft	NOTES: CME-55 Truck Mounted Rig was used. 43.5-48.5 ft Coring time 8,4,5,8 and 7 min/ft. 48.5-52.0 ft Coring time 6,15,8 min/ft and 6 min/6".	Sheet 1 of 2
No. of Soil Samples: 11 No. of Core Runs: 2		SM-001-AETrev.9/09

B-2 (CONTINUED)

Driller: Jaime Lloret	Connecticut DOT Boring Report		Hole No.: B-2
Inspector: R. Beniwal	Town: Redding		Stat./Offset: 13+59.52/10.46 RT
Soil Engr: Applied Earth Tech.	Project No.: 116-133		Northing: 178172.23
Start Date: 10-29-13	Location: Route 53		Easting: 414761.39
Finish Date: 10-29-13	Bridge No.: 01018		Surface Elevation: 366.61
Project Description: Rt 53 over Saugatuck River			Prime Engineer: Santec
Casing Size/Type: 3.25 in HA	Sampler Type/Size: SS 2.0 in		Core Barrel Type: 2 in NX
Hammer Wt.: Fall: in.	Hammer Wt.: 140 Fall: 30in.		Boring Co: Associated Boring Co.
Groundwater Observations: @6.0 ft			

SAMPLES

Depth (ft)	Sample Type/No.	Blows on Sampler per 6 inches	Pen. (in.)	Rec. (in.)	RQD %	Generalized Strata Description	Material Description and Notes	Elevation (ft)
35	S-10	3 7 8 15	24	10		GRAY BROWN FC SAND & FC GRAVEL LTL SILT (con't)		330
40	S-11	11 17 20 21	24	10				325
45	C-1		60	28	20	BEDROCK GRAY GNEISS	Gray, fractured, fine to medium grained, mottled AMPHIBOLITE and GNEISS.	320
50	C-2		42	42	0		Gray, fractured, fine to medium grained, GNEISS with schist seams.	315
							END OF BORING 52ft	
55								310
60								305
65								300
70								

Sample Type: S = Split Spoon C = Core UP = Undisturbed Piston V = Vane Shear Test
Proportions Used: Trace = 1 - 10%, Little = 10 - 20%, Some = 20 - 35%, And = 35 - 50%

Total Penetration in Earth: 43.5ft Rock: 8.5ft	NOTES: CME-55 Truck Mounted Rig was used. 43.5-48.5 ft Coring time 8,4,5,8 and 7 min/ft. 48.5-52.0 ft Coring time 6,15,8 min/ft and 6 min/6".	Sheet 2 of 2
No. of Soil Samples: 11 No. of Core Runs: 2		SM-001-AETrev.9/09

NOTE: SEE GENERAL PLAN FOR BORING LOCATIONS.

REV.	DATE	REVISION DESCRIPTION	SHEET NO.

THE INFORMATION, INCLUDING ESTIMATED QUANTITIES OF WORK, SHOWN ON THESE SHEETS IS BASED ON LIMITED INVESTIGATIONS BY THE STATE AND IS IN NO WAY WARRANTED TO INDICATE THE CONDITIONS OF ACTUAL QUANTITIES OF WORK WHICH WILL BE REQUIRED.

Plotted Date: 7/29/2015

DESIGNER/DRAFTER: **JRA**
CHECKED BY: **AML**

STATE OF CONNECTICUT
DEPARTMENT OF TRANSPORTATION

Filename: ...\S-04 BORING LOGS - 1.dgn

SIGNATURE/BLOCK:
Stantec Consulting Services Inc.
55 Church Street
Suite 601
New Haven, CT 06510

PROJECT TITLE:
REPLACEMENT OF BRIDGE NO. 01018, ROUTE 53 OVER SAUGATUCK RIVER

TOWN: **REDDING**

DRAWING TITLE: **BORING LOGS - 1**

PROJECT NO. **116-133**
DRAWING NO. **S-04**
SHEET NO. **04.04**

B-3

Driller: Jaime Lloret	Connecticut DOT Boring Report		Hole No.: B-3
Inspector: R. Beniwal	Town: Redding		Stat./Offset: 14+14.63/15.34 LT
Soil Engr: Applied Earth Tech.	Project No.: 116-133		Northing: 178217.31
Start Date: 10-31-13	Location: Route 53		Easting: 414720.35
Finish Date: 10-31-13	Bridge No.: 01018		Surface Elevation: 367.78
Project Description: Rt 53 over Saugatuck River			Prime Engineer: Santec
Casing Size/Type: 3.25 in HA	Sampler Type/Size: SS 2.0 in		Core Barrel Type: 2 in NX
Hammer Wt.: Fall: in.	Hammer Wt.: 140 Fall: 30in.		Boring Co: Associated Boring Co.
Groundwater Observations: @7.0 ft after 5.5 ft after coring hours			

SAMPLES

Depth (ft)	Sample Type/No.	Blows on Sampler per 6 inches	Pen. (in.)	Rec. (in.)	RQD %	Generalized Strata Description	Material Description and Notes	Elevation (ft)
0						ASPHALT	7 in Asphalt over 10 in gravel base	
	S-1	14 29 19 25	24	1		ROADWAY BASE	Brown fine coarse SAND and fine coarse gravel, little silt, occasional cobbles, fill.	
	S-2	29 20 14 13	24	6		BROWN FC SAND SOME FC GRAVEL, FILL		365
5	S-3	10 5 3 2	24	2			Brown fine coarse SAND and fine coarse gravel, little silt, occasional cobbles, fill.	
	S-4	4 13 14 12	24	6		DARK BRN ORGANIC F SAND & SILT	Dark brown organic fine SAND and silt. Gray brown fine coarse SAND, some fine coarse gravel, little silt.	360
10	S-5	3 5 5 5	24	6		GRAY BROWN FC SAND & FC GRAVEL LTL SILT	Gray brown fine coarse SAND, some fine medium gravel, little to some silt, occasional fine coarse SAND layers.	355
15	S-6	4 2 2 5	24	6				350
20	S-7	7 10 13 12	24	4			Gray brown fine coarse SAND, and fine coarse gravel, little silt, occasional fine coarse SAND layers.	345
25	S-8	4 8 10 10	18	6				340
30	S-9	11 16 18 25	24	15			Gray brown fine coarse SAND and to some fine coarse gravel, trace silt.	335
35								

Sample Type: S = Split Spoon C = Core UP = Undisturbed Piston V = Vane Shear Test
Proportions Used: Trace = 1 - 10%, Little = 10 - 20%, Some = 20 - 35%, And = 35 - 50%

Total Penetration in Earth: 37ft Rock: 9.5ft	NOTES: CME-55 Truck Mounted Rig was used. 37.0-42.0 ft Coring time 2,2,4,5 and 4 min/ft. 42.0-46.5 ft Coring time 4,6,7 and 7 min/ft and 6min/5".	Sheet 1 of 2
No. of Soil Samples: 10 No. of Core Runs: 2		SM-001-AETrev.9/09

B-3 (CONTINUED)

Driller: Jaime Lloret	Connecticut DOT Boring Report		Hole No.: B-3
Inspector: R. Beniwal	Town: Redding		Stat./Offset: 14+14.63/15.34 LT
Soil Engr: Applied Earth Tech.	Project No.: 116-133		Northing: 178217.31
Start Date: 10-31-13	Location: Route 53		Easting: 414720.35
Finish Date: 10-31-13	Bridge No.: 01018		Surface Elevation: 367.78
Project Description: Rt 53 over Saugatuck River			Prime Engineer: Santec
Casing Size/Type: 3.25 in HA	Sampler Type/Size: SS 2.0 in		Core Barrel Type: 2 in NX
Hammer Wt.: Fall: in.	Hammer Wt.: 140 Fall: 30in.		Boring Co: Associated Boring Co.
Groundwater Observations: @7.0 ft after 5.5 ft after coring hours			

SAMPLES

Depth (ft)	Sample Type/No.	Blows on Sampler per 6 inches	Pen. (in.)	Rec. (in.)	RQD %	Generalized Strata Description	Material Description and Notes	Elevation (ft)
35	S-10	14 22 20 32	24	18		BEDROCK GRAY WHITE DOLOMITE MARBLE OVER GRAY GNEISS		
								330
40	C-1		60	20	20		Gray white, fractured, fine to medium grained, dolomite MARBLE over gray GNEISS.	
								325
45	C-2		54	45	59		Gray, fractured, fine to medium grained, GNEISS.	
							END OF BORING 46.5ft	320
50								
								315
55								
								310
60								
								305
65								
								300
70								

Sample Type: S = Split Spoon C = Core UP = Undisturbed Piston V = Vane Shear Test
Proportions Used: Trace = 1 - 10%, Little = 10 - 20%, Some = 20 - 35%, And = 35 - 50%

Total Penetration in Earth: 37ft Rock: 9.5ft	NOTES: CME-55 Truck Mounted Rig was used. 37.0-42.0 ft Coring time 2,2,4,5 and 4 min/ft. 42.0-46.5 ft Coring time 4,6,7 and 7 min/ft and 6min/5".	Sheet 2 of 2
No. of Soil Samples: 10 No. of Core Runs: 2		SM-001-AETrev.9/09

B-4

Driller: Jaime Lloret	Connecticut DOT Boring Report		Hole No.: B-4
Inspector: R. Beniwal	Town: Redding		Stat./Offset: 13+46.53/10.57 LT
Soil Engr: Applied Earth Tech.	Project No.: 116-133		Northing: 178153.01
Start Date: 10-20-13	Location: Route 53		Easting: 414745.85
Finish Date: 10-20-13	Bridge No.: 01018		Surface Elevation: 367.33
Project Description: Rt 53 over Saugatuck River			Prime Engineer: Santec
Casing Size/Type: 3.25 in PD	Sampler Type/Size: SS 2.0 in		Core Barrel Type: 2 in NX
Hammer Wt.: 300lb Fall: 24in.	Hammer Wt.: 140lb Fall: 30in.		Boring Co: Associated Boring Co.
Groundwater Observations: @6.0 ft			

SAMPLES

Depth (ft)	Sample Type/No.	Blows on Sampler per 6 inches	Pen. (in.)	Rec. (in.)	RQD %	Casing Blows per 6"	Generalized Strata Description	Material Description and Notes	Elevation (ft)
0							ASPHALT	5 in Asphalt over 10 in gravel base	
	S-1	15 14 23	18	4			ROADWAY BASE	Brown fine coarse SAND, some fine coarse gravel, little silt, occasional cobbles, fill.	
	S-2	40 26 19 18	24	2			BROWN FC SAND SOME FC GRAVEL, FILL		365
5	S-3	14 10 11 4	24	3		18 9		Brown fine coarse SAND, some fine coarse gravel, little silt, fill.	
	S-4	8 12 16 14	24	6		17 21 20	DARK BRN ORGANIC F SAND & SILT	Dark brown organic fine SAND and silt.	360
10	S-5	10 9 14 15	24	15		18 39 47 54	BROWN FC SAND & FC GRAVEL LTL SILT	Gray brown fine coarse SAND and fine coarse gravel, little silt.	355
15	S-6	21 23 14 14	24	10		52 50 53 30			350
20	S-7	7 5 11 14	24	5		45 45 17 42 17 30		Gray brown fine coarse SAND and fine coarse gravel, little silt.	345
25	S-8	17 8 3 3	18	8		25 42	GRAY BROWN FC SAND LTL SILT	Gray brown fine coarse, little silt	340
30	S-9	3 4 5 5	24	14		19 16 25 23 16 17 22 23 24		Gray brown fine coarse, little silt	335
35									

Sample Type: S = Split Spoon C = Core UP = Undisturbed Piston V = Vane Shear Test
Proportions Used: Trace = 1 - 10%, Little = 10 - 20%, Some = 20 - 35%, And = 35 - 50%

Total Penetration in Earth: 39ft Rock: 10ft	NOTES: CME-55 Truck Mounted Rig was used. 39.0-44.0 ft Coring time 6,4,4,5 and 2 min/ft. 44.0-49.0 ft Coring time 10,8,9,9 and 9 min/ft.	Sheet 1 of 2
No. of Soil Samples: 10 No. of Core Runs: 2		SM-001-AETrev.9/09

B-4 (CONTINUED)

Driller: Jaime Lloret	Connecticut DOT Boring Report		Hole No.: B-4
Inspector: R. Beniwal	Town: Redding		Stat./Offset: 13+46.53/10.57 LT
Soil Engr: Applied Earth Tech.	Project No.: 116-133		Northing: 178153.01
Start Date: 10-20-13	Location: Route 53		Easting: 414745.85
Finish Date: 10-20-13	Bridge No.: 01018		Surface Elevation: 367.33
Project Description: Rt 53 over Saugatuck River			Prime Engineer: Santec
Casing Size/Type: 3.25 in PD	Sampler Type/Size: SS 2.0 in		Core Barrel Type: 2 in NX
Hammer Wt.: 300lb Fall: 24in.	Hammer Wt.: 140lb Fall: 30in.		Boring Co: Associated Boring Co.
Groundwater Observations: @6.0 ft			

SAMPLES

Depth (ft)	Sample Type/No.	Blows on Sampler per 6 inches	Pen. (in.)	Rec. (in.)	RQD %	Casing Blows per 6"	Generalized Strata Description	Material Description and Notes	Elevation (ft)
35	S-10	5 3 3 3	24	0		16 17 21 100	GRAY BROWN FC SAND LTL SILT (con't)		
							BEDROCK GRAY WHITE DOLOMITE MARBLE OVER GRAY GNEISS		330
40	C-1		60	25	28			Gray white, fractured, fine to medium grained, dolomite MARBLE over gray GNEISS.	325
45	C-2		60	60	66			Gray, fractured, fine to medium grained, GNEISS with schist seams.	320
50								END OF BORING 49ft	315
55									310
60									305
65									300
70									

Sample Type: S = Split Spoon C = Core UP = Undisturbed Piston V = Vane Shear Test
Proportions Used: Trace = 1 - 10%, Little = 10 - 20%, Some = 20 - 35%, And = 35 - 50%

Total Penetration in Earth: 39ft Rock: 10ft	NOTES: CME-55 Truck Mounted Rig was used. 39.0-44.0 ft Coring time 6,4,4,5 and 2 min/ft. 44.0-49.0 ft Coring time 10,8,9,9 and 9 min/ft.	Sheet 2 of 2
No. of Soil Samples: 10 No. of Core Runs: 2		SM-001-AETrev.9/09

NOTE: SEE GENERAL PLAN FOR BORING LOCATIONS.

REV.	DATE	REVISION DESCRIPTION	SHEET NO.

THE INFORMATION, INCLUDING ESTIMATED QUANTITIES OF WORK, SHOWN ON THESE SHEETS IS BASED ON LIMITED INVESTIGATIONS BY THE STATE AND IS IN NO WAY WARRANTED TO INDICATE THE CONDITIONS OF ACTUAL QUANTITIES OF WORK WHICH WILL BE REQUIRED.

Plotted Date: 7/29/2015

DESIGNER/DRAFTER: JRA
CHECKED BY: AML

STATE OF CONNECTICUT
DEPARTMENT OF TRANSPORTATION

Filename: ...\S-05 BORING LOGS - 2.dgn

SIGNATURE/BLOCK:

Stantec Consulting Services Inc.
55 Church Street
Suite 601
New Haven, CT 06510

PROJECT TITLE:
REPLACEMENT OF BRIDGE NO. 01018, ROUTE 53 OVER SAUGATUCK RIVER

TOWN: REDDING

DRAWING TITLE: BORING LOGS - 2

PROJECT NO. 116-133
DRAWING NO. S-05
SHEET NO. 04.05

RB-1

Driller: Jaime Lloret	Connecticut DOT Boring Report		Hole No.: RB-1
Inspector: R. Beniwal	Town: Redding		Stat./Offset: 12+92.88/11.10 RT
Soil Engr: Applied Earth Tech.	Project No.: 116-133		Northing: 178110.21
Start Date: 10-30-13	Location: Route 53		Easting: 414784.95
Finish Date: 10-30-13	Bridge No.: 01018		Surface Elevation: 366.08
Project Description: Rt 53 over Saugatuck River			Prime Engineer: Santec
Casing Size/Type: 3.25 in HA	Sampler Type/Size: SS 2.0 in		Core Barrel Type:
Hammer Wt.: Fall: in.	Hammer Wt.: 140 Fall: 30in.		Boring Co: Associated Boring Co.
Groundwater Observations: @6.0 ft			

Depth (ft)	Sample Type/No.	Blows on Sampler per 6 inches	Pen. (in.)	Rec. (in.)	RQD %	Generalized Strata Description	Material Description and Notes	Elevation (ft)
0						ASPHALT CONCRETE	7 in Asphalt concrete over 10 in roadway base	365
						ROADWAY BASE		
	S-1	100/2"	2	0		Brown fine coarse SAND and fine coarse gravel, fill.	Brown fine coarse SAND and fine coarse gravel, occasional cobbles and boulders.	
5	S-2	3 5 7 22	24	4		DARK BRN ORGANIC F SAND	Dark brown organic fine SAND and silt.	360
	S-3	14 10 11 10	24	12		GRAY BRN FC SAND & FC GRAVEL	Gray brown fine coarse SAND and fine coarse gravel, trace silt.	
10	S-4	6 9 10 8	24	10				355
	S-5	13 12 12 14	24	8			Gray brown fine coarse SAND and fine coarse gravel, trace silt.	
15							END OF BORING 14ft	350
20								345
25								340
30								335
35								

Sample Type: S = Split Spoon C = Core UP = Undisturbed Piston V = Vane Shear Test
Proportions Used: Trace = 1 - 10%, Little = 10 - 20%, Some = 20 - 35%, And = 35 - 50%

Total Penetration in Earth: 14ft Rock: ft	NOTES: CME-55 Truck Mounted Rig was used.	Sheet 1 of 1
No. of Soil Samples: 5 No. of Core Runs: ---		SM-001-AETrev.9/09

Applied Earth Technologies, Inc., 571 Bee Street, Meriden, CT 06450, Tel: 203-634-9110 A-9

RB-2

Driller: Jaime Lloret	Connecticut DOT Boring Report		Hole No.: RB-2
Inspector: R. Beniwal	Town: Redding		Stat./Offset: 12+75.90/11.57 LT
Soil Engr: Applied Earth Tech.	Project No.: 116-133		Northing: 178086.34
Start Date: 10-31-13	Location: Route 53		Easting: 414769.67
Finish Date: 10-31-13	Bridge No.: 01018		Surface Elevation: 366.64
Project Description: Rt 53 over Saugatuck River			Prime Engineer: Santec
Casing Size/Type: 3.25 in HA	Sampler Type/Size: SS 2.0 in		Core Barrel Type:
Hammer Wt.: Fall: in.	Hammer Wt.: 140 Fall: 30in.		Boring Co: Associated Boring Co.
Groundwater Observations: @5.5 ft			

Depth (ft)	Sample Type/No.	Blows on Sampler per 6 inches	Pen. (in.)	Rec. (in.)	RQD %	Generalized Strata Description	Material Description and Notes	Elevation (ft)
0						ASPHALT CONCRETE	8 in Asphalt concrete over 10 in roadway base	
	S-1	12 19 21	18	6		ROADWAY BASE	Brown fine coarse SAND and fine coarse gravel, occasional cobbles and boulders.	365
	S-2	25 27 41 41	24	6		Brown fine coarse SAND and fine coarse gravel, fill.		
5	S-2	2 2 2 4	24	6		DARK BRN ORGANIC F SAND	Dark brown organic fine SAND and silt.	360
	S-3	6 10 4 12	24	12		GRAY BRN FC SAND & FC GRAVEL	Gray brown fine coarse SAND and fine coarse gravel, trace silt.	
10	S-4	9 5 6 11	24	10				355
	S-5	9 8 7 11	24	8			Gray brown fine coarse SAND and fine coarse gravel, trace silt.	
15							END OF BORING 14ft	350
20								345
25								340
30								335
35								

Sample Type: S = Split Spoon C = Core UP = Undisturbed Piston V = Vane Shear Test
Proportions Used: Trace = 1 - 10%, Little = 10 - 20%, Some = 20 - 35%, And = 35 - 50%

Total Penetration in Earth: 14ft Rock: ft	NOTES: CME-55 Truck Mounted Rig was used.	Sheet 1 of 1
No. of Soil Samples: 5 No. of Core Runs: ---		SM-001-AETrev.9/09

Applied Earth Technologies, Inc., 571 Bee Street, Meriden, CT 06450, Tel: 203-634-9110 A-10

NOTE: SEE GENERAL PLAN FOR BORING LOCATIONS.

REV.	DATE	REVISION DESCRIPTION	SHEET NO.

THE INFORMATION, INCLUDING ESTIMATED QUANTITIES OF WORK, SHOWN ON THESE SHEETS IS BASED ON LIMITED INVESTIGATIONS BY THE STATE AND IS IN NO WAY WARRANTED TO INDICATE THE CONDITIONS OF ACTUAL QUANTITIES OF WORK WHICH WILL BE REQUIRED.

Plotted Date: 7/29/2015

DESIGNER/DRAFTER: **JRA**
CHECKED BY: **AML**

STATE OF CONNECTICUT
DEPARTMENT OF TRANSPORTATION

Filename: ...\S-06 BORING LOGS - 3.dgn

SIGNATURE/BLOCK:

Stantec Consulting Services Inc.
55 Church Street
Suite 601
New Haven, CT 06510

PROJECT TITLE:
REPLACEMENT OF BRIDGE NO. 01018, ROUTE 53 OVER SAUGATUCK RIVER

TOWN: **REDDING**

DRAWING TITLE: **BORING LOGS - 3**

PROJECT NO. **116-133**
DRAWING NO. **S-06**
SHEET NO. **04.06**

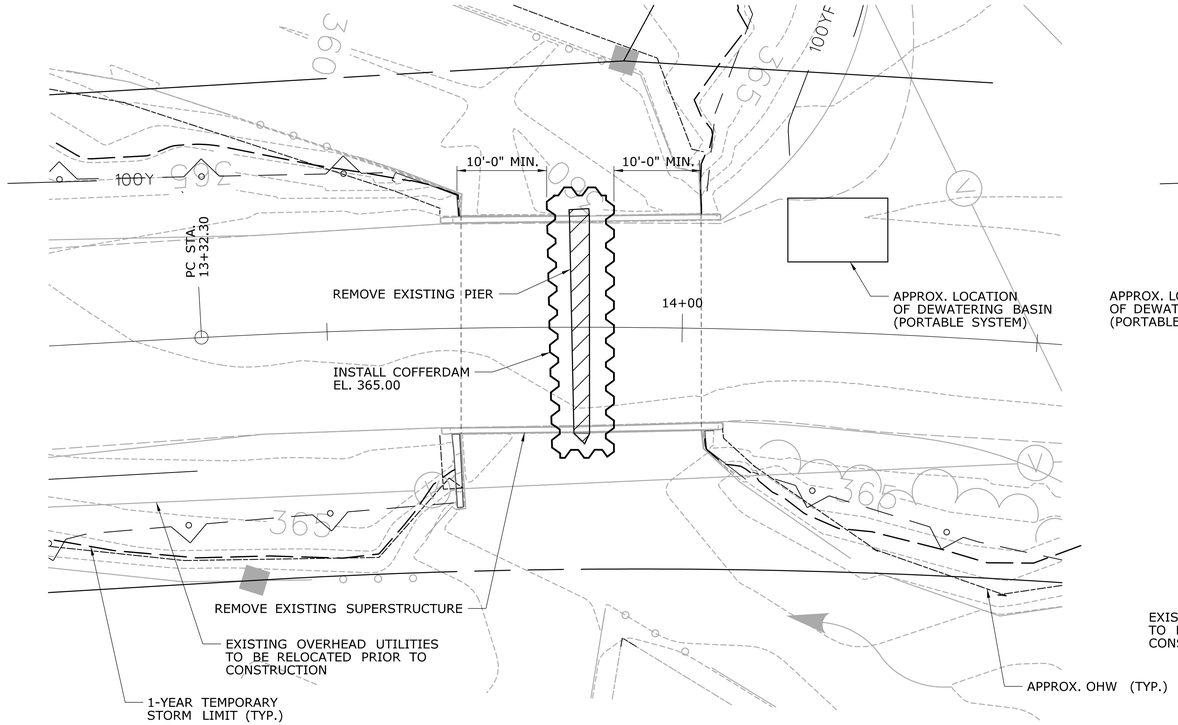

PHASE 1 - PIER REMOVAL

SCALE: 3/32" = 1'-0"

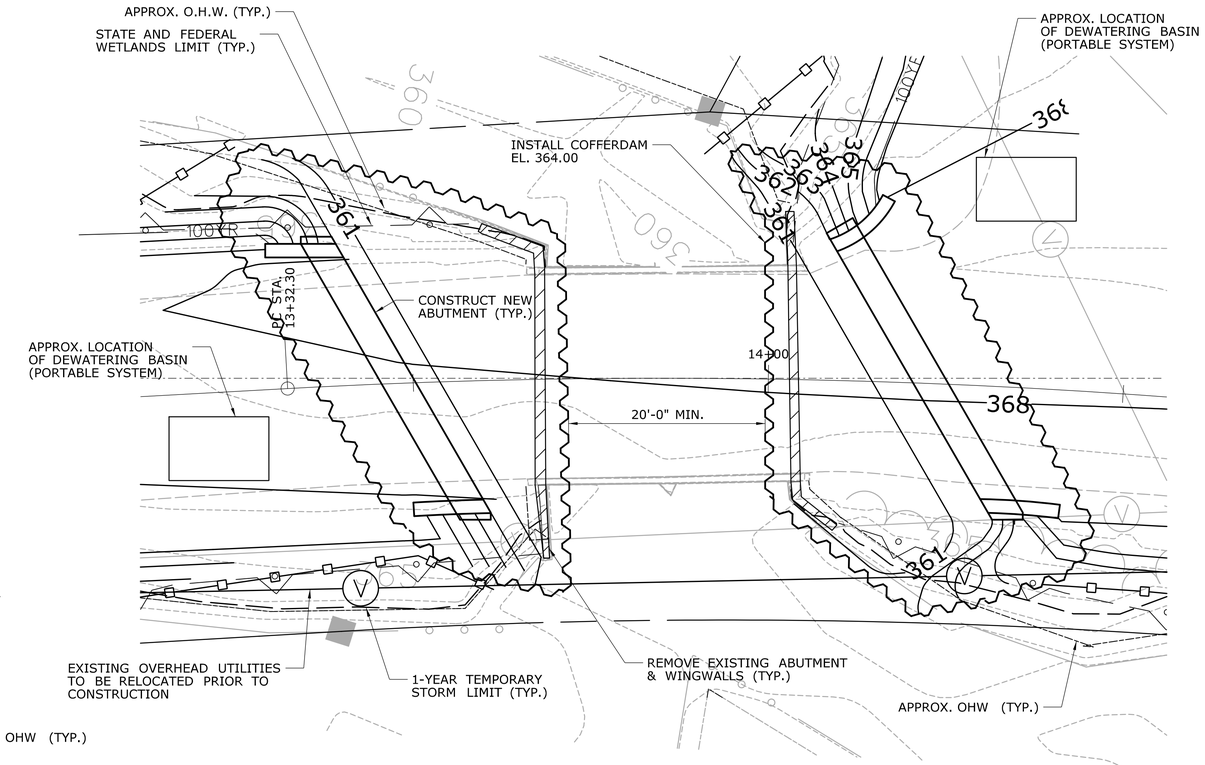

PHASE 2 - ABUTMENT REMOVAL & NEW CONSTRUCTION

SCALE: 3/32" = 1'-0"

TEMPORARY HYDRAULIC DATA	
AVERAGE DAILY FLOW	26 CFS
AVERAGE SPRING FLOW	51 CFS
2-YEAR FREQUENCY DISCHARGE	605 CFS
TEMPORARY DESIGN DISCHARGE	250 CFS
TEMPORARY DESIGN FREQUENCY	1-YEAR
PHASE 1: TEMPORARY WATER SURFACE EL. UPSTREAM	363.90 FT
PHASE 1: TEMPORARY WATER SURFACE EL. DOWNSTREAM	363.44 FT
PHASE 2: TEMPORARY WATER SURFACE EL. UPSTREAM	363.94 FT
PHASE 2: TEMPORARY WATER SURFACE EL. DOWNSTREAM	363.38 FT

SUGGESTED SEQUENCE OF CONSTRUCTION:

SEE TRAFFIC SUBSET FOR ADDITIONAL MAINTENANCE AND PROTECTION OF TRAFFIC DETAILS AND REQUIREMENTS.

PHASE 1:

1. INSTALL PILES THROUGH EXISTING ROADWAY DURING ALTERNATING ONE-WAY TRAFFIC OPERATIONS.
2. ESTABLISH DETOUR AND ROAD CLOSURE.
3. INSTALL EROSION AND SEDIMENTATION CONTROLS AT BRIDGE AND CULVERT AREA.
4. INSTALL TEMPORARY DEBRIS SHIELD BELOW EXISTING BRIDGE. MINIMUM ELEVATION OF ALL DEBRIS SHIELD COMPONENTS SHALL BE EL. 363.0.
5. REMOVE EXISTING SUPERSTRUCTURE.
6. INSTALL COFFERDAM AROUND EXISTING PIER.
7. REMOVE EXISTING PIER TO EL. 358.00 AND FILL WITH NATURAL STREAMBED MATERIAL.
8. REMOVE COFFERDAM FOR EXISTING PIER.

PHASE 2:

1. INSTALL COFFERDAM FOR REMOVAL OF EXISTING NORTH AND SOUTH ABUTMENTS AND FOR CONSTRUCTION OF NEW ABUTMENT 1 AND ABUTMENT 2.
2. REMOVE EXISTING NORTH AND SOUTH ABUTMENTS TO EL. 358.00.
3. CONSTRUCT NEW ABUTMENT 1 AND ABUTMENT 2.
4. ESTABLISH PROPOSED CHANNEL GRADING INSIDE COFFERDAM USING NATURAL STREAMBED MATERIAL FOR CHANNEL AREAS AND RIPRAP FOR SLOPES.
5. REMOVE REMAINING COFFERDAM.
6. INSTALL PRECAST CONCRETE BOX BEAMS.
7. CONSTRUCT DECK SHEAR SLAB, BACKWALL, APPROACH SLABS AND BRIDGE PARAPETS.
8. REPLACE EXISTING 15" CMP WITH NEW 15" CORRUGATED ALUMINIZED PIPE, INSTALL WILDLIFE BARRIER CURB AND RECONSTRUCT ROADWAY.
9. ESTABLISH FINAL TRAFFIC PATTERNS.

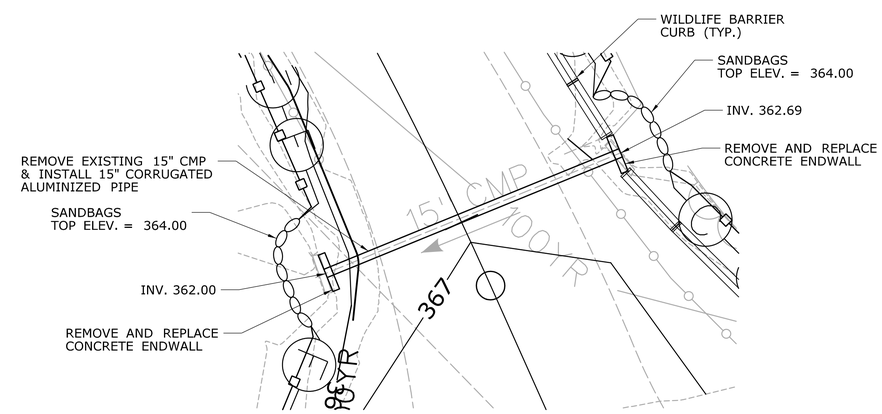

NOTE: THE COST OF SANDBAGS AND ALL OTHER MATERIAL USED FOR THE DIVERSION OF WATER FOR THE REPLACEMENT OF ENDWALLS AND PIPE SHALL NOT BE MEASURED FOR PAYMENT AND SHALL BE INCLUDED IN THE OVERALL COST OF CONSTRUCTION.

HEADWALL REPLACEMENT PLAN

SCALE: 3/32" = 1'-0"

REV.	DATE	REVISION DESCRIPTION	SHEET NO.
-	-	-	-
-	-	-	-
-	-	-	-
-	-	-	-
-	-	-	-
-	-	-	-

THE INFORMATION, INCLUDING ESTIMATED QUANTITIES OF WORK, SHOWN ON THESE SHEETS IS BASED ON LIMITED INVESTIGATIONS BY THE STATE AND IS IN NO WAY WARRANTED TO INDICATE THE CONDITIONS OF ACTUAL QUANTITIES OF WORK WHICH WILL BE REQUIRED.

Plotted Date: 7/29/2015

DESIGNER/DRAFTER: JRA
CHECKED BY: AML
SCALE AS NOTED

STATE OF CONNECTICUT
DEPARTMENT OF TRANSPORTATION

Filename: ...\S-07 WATER HANDLING PLAN.dgn

SIGNATURE/BLOCK:

Stantec Consulting Services Inc.
55 Church Street
Suite 601
New Haven, CT 06510

PROJECT TITLE:
REPLACEMENT OF BRIDGE NO. 01018, ROUTE 53 OVER SAUGATUCK RIVER

TOWN: REDDING

DRAWING TITLE: WATER HANDLING PLAN

PROJECT NO. 116-133
DRAWING NO. S-07
SHEET NO. 04.07

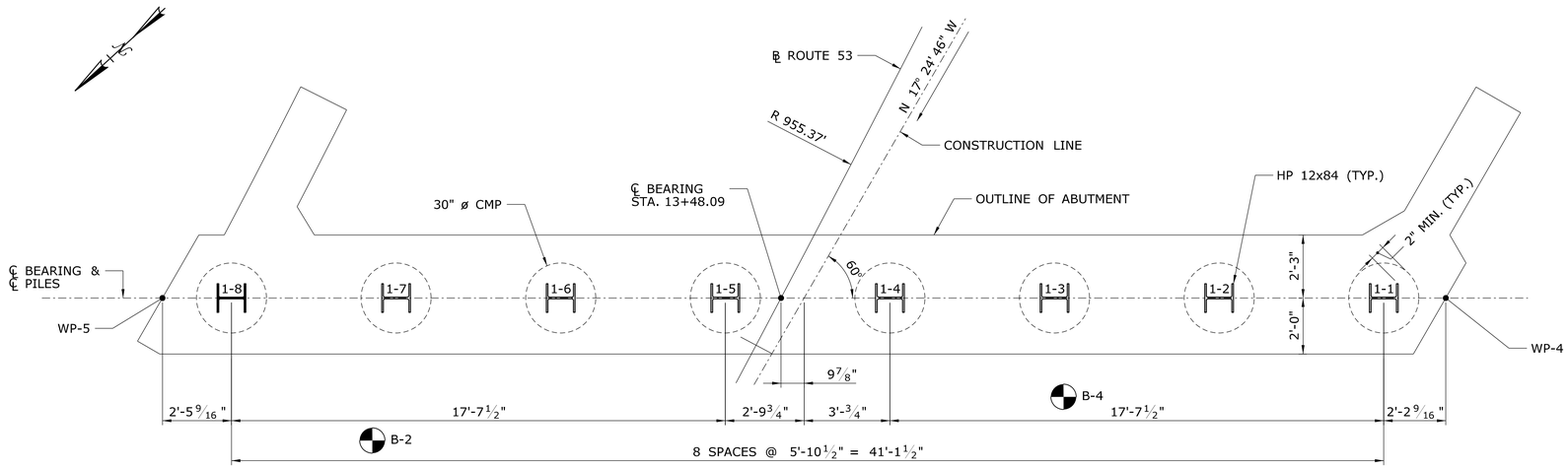

ABUTMENT 1 PILE PLAN

SCALE: 3/8" = 1'-0"

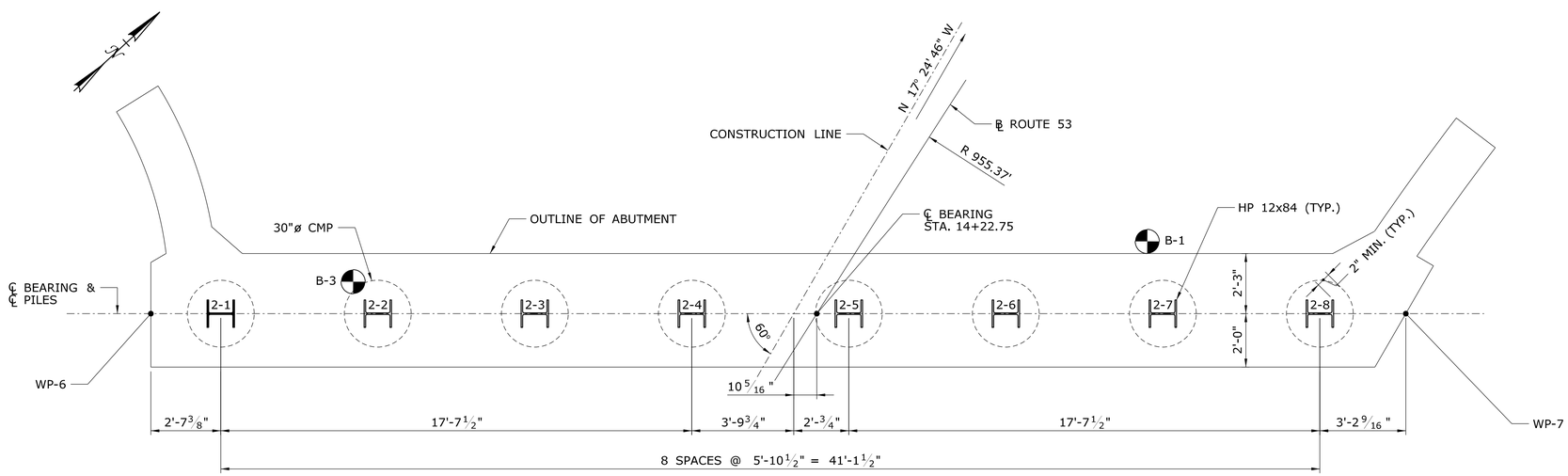

ABUTMENT 2 PILE PLAN

SCALE: 3/8" = 1'-0"

PILE NOTES

1. ALL PILES SHALL BE HP 12x84 CONFORMING TO ASTM A709 GRADE 50.
2. ALL PILES SHALL BE PLUMB PILES AS SHOWN ON THE PILE PLANS.
3. PILES AND PILE INSTALLATION SHALL BE IN ACCORDANCE WITH SECTION 7.02, UNLESS OTHERWISE NOTED HEREIN.
4. PRIOR TO INSTALLING ANY PILES, THE CONTRACTOR SHALL SUBMIT TO THE ENGINEER FOR REVIEW AND APPROVAL THE PROPOSED METHOD AND SEQUENCE OF PILE INSTALLATION.
5. TWO TEST PILES SHALL BE INSTALLED AS INDICATED ON THE PLANS PRIOR TO INSTALLATION OF PRODUCTION PILES.
6. THE PILES SHALL BE INSTALLED IN PRE-AUGERED HOLES AND SOCKETED TO BEDROCK AS SHOWN ON THE PLANS. CONCRETE USED TO SOCKET PILES TO BEDROCK SHALL BE PAID FOR UNDER THE ITEM 'CLASS "F" CONCRETE'.
7. ANY VOID SPACE REMAINING AROUND THE PILE AFTER COMPLETION OF DRIVING SHALL BE FILLED WITH AN APPROVED GRANULAR MATERIAL, THE COST OF WHICH SHALL BE INCLUDED IN THE ITEM 'PRE-AUGERING OF PILES'.
8. PILES SHALL NOT BE SPLICED WITHOUT THE APPROVAL OF THE ENGINEER.
9. PILES SHALL BE INSTALLED WITH A LATERAL TOLERANCE OF 3" IN PLAN.
10. PILES SHALL BE INSTALLED ORIENTED AS SHOWN ON THE PLAN.
11. DYNAMIC MONITORING OF TWO PILES (ONE AT EACH ABUTMENT) SHALL BE COMPLETED BY THE CONTRACTOR TO CONFIRM PILE CAPACITY THROUGH DYNAMIC PILE DRIVING ANALYSIS (PDA). THE PILES TO BE TESTED SHALL BE AT LOCATIONS DIRECTED BY THE ENGINEER.

PILE DATA TABULATION

LOCATION	ESTIMATED FINAL PILE LENGTH	MAXIMUM DESIGN PILE LOAD	ULTIMATE PILE CAPACITY
ABUTMENT 1	38 FT	214 KIPS (STR II) 144 KIPS (SER I)	335 KIPS
ABUTMENT 2	30 FT	215 KIPS (STR II) 144 KIPS (SER I)	335 KIPS

LEGEND

PILE IDENTIFICATION (TYP.)

X-X = PLUMB PILE (HP 12x84)

X-X = TEST PILE (HP 12x84 - 50' LONG)

= SOIL BORING (SEE S-04, S-05 AND S-06)

REV.	DATE	REVISION DESCRIPTION	SHEET NO.
-	-	-	-
-	-	-	-
-	-	-	-
-	-	-	-
-	-	-	-
-	-	-	-

THE INFORMATION, INCLUDING ESTIMATED QUANTITIES OF WORK, SHOWN ON THESE SHEETS IS BASED ON LIMITED INVESTIGATIONS BY THE STATE AND IS IN NO WAY WARRANTED TO INDICATE THE CONDITIONS OF ACTUAL QUANTITIES OF WORK WHICH WILL BE REQUIRED.

Plotted Date: 7/29/2015

DESIGNER/DRAFTER: JRA
CHECKED BY: AML
SCALE AS NOTED

STATE OF CONNECTICUT
DEPARTMENT OF TRANSPORTATION

Filename: ...\S-08 PILE PLAN.dgn

SIGNATURE/BLOCK:

Stantec Consulting Services Inc.
55 Church Street
Suite 601
New Haven, CT 06510

PROJECT TITLE:
REPLACEMENT OF BRIDGE NO. 01018, ROUTE 53 OVER SAUGATUCK RIVER

TOWN: REDDING

DRAWING TITLE: PILE PLAN

PROJECT NO. 116-133
DRAWING NO. S-08
SHEET NO. 04.08

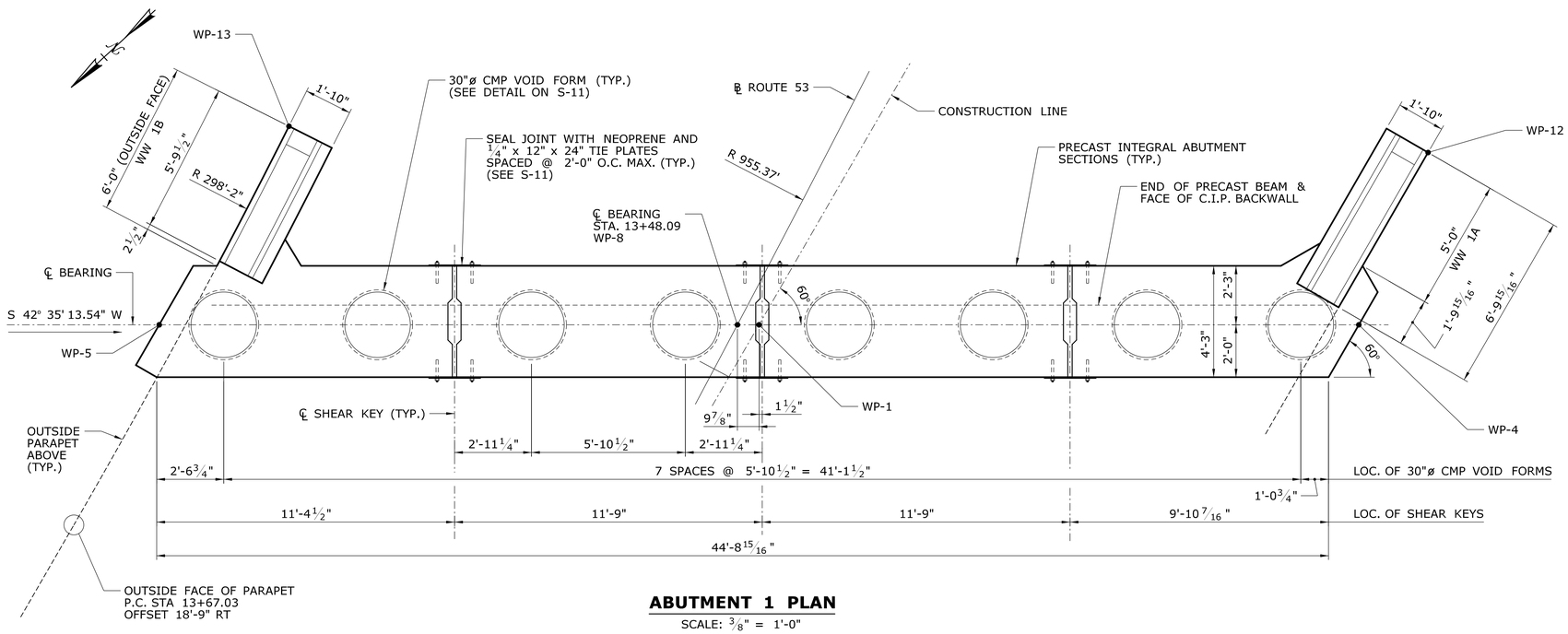

ABUTMENT 1 PLAN

SCALE: 3/8" = 1'-0"

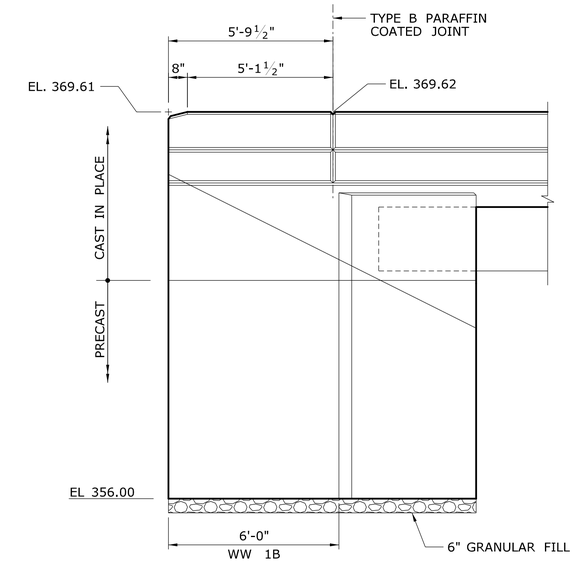

WINGWALL 1B DEVELOPED ELEVATION

SCALE: 3/8" = 1'-0"

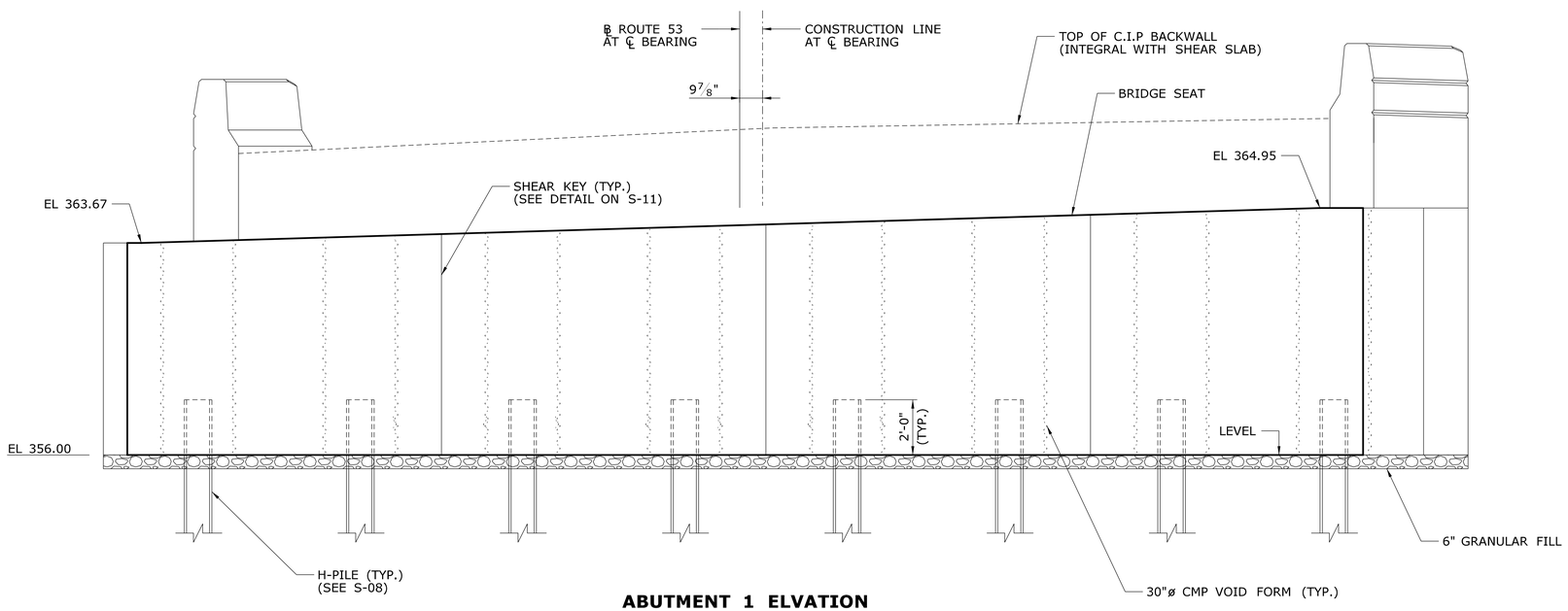

ABUTMENT 1 ELVATION

SCALE: 3/8" = 1'-0"

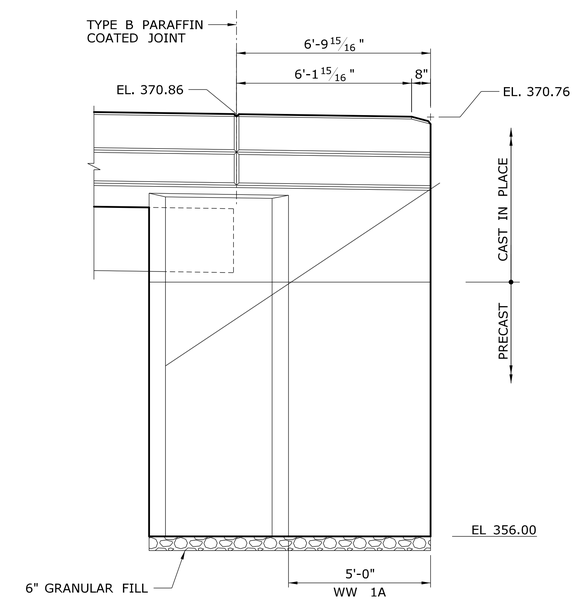

WINGWALL 1A ELEVATION

SCALE: 3/8" = 1'-0"

REV.	DATE	REVISION DESCRIPTION	SHEET NO.
-	-	-	-
-	-	-	-
-	-	-	-
-	-	-	-
-	-	-	-
-	-	-	-

THE INFORMATION, INCLUDING ESTIMATED QUANTITIES OF WORK, SHOWN ON THESE SHEETS IS BASED ON LIMITED INVESTIGATIONS BY THE STATE AND IS IN NO WAY WARRANTED TO INDICATE THE CONDITIONS OF ACTUAL QUANTITIES OF WORK WHICH WILL BE REQUIRED.

Plotted Date: 7/29/2015

DESIGNER/DRAFTER: **JRA**

CHECKED BY: **AML**

SCALE AS NOTED

STATE OF CONNECTICUT
DEPARTMENT OF TRANSPORTATION

Filename: ...\S-09 ABUTMENT 1.dgn

SIGNATURE/ BLOCK:

Stantec Consulting Services Inc.
55 Church Street
Suite 601
New Haven, CT 06510

PROJECT TITLE:

REPLACEMENT OF BRIDGE NO. 01018, ROUTE 53 OVER SAUGATUCK RIVER

TOWN: **REDDING**

DRAWING TITLE: **ABUTMENT 1**

PROJECT NO. **116-133**

DRAWING NO. **S-09**

SHEET NO. **04.09**

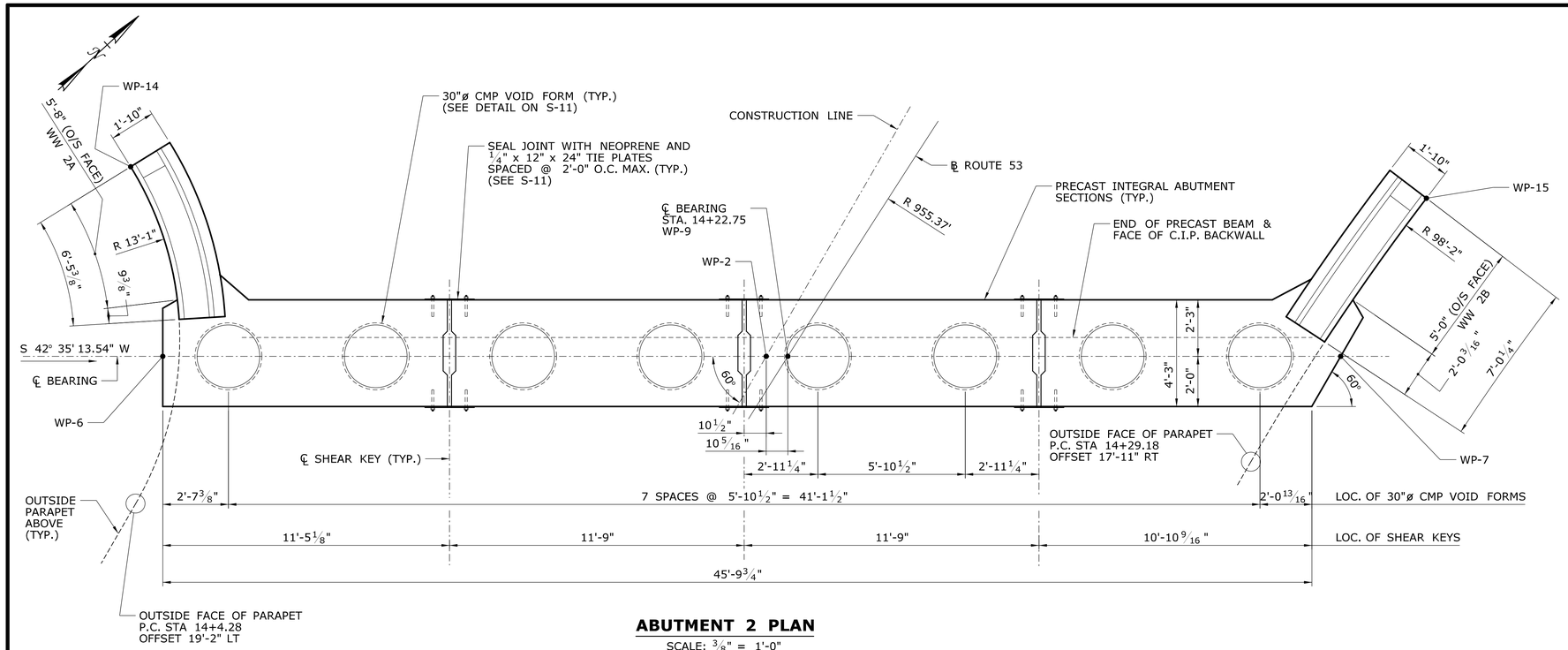

ABUTMENT 2 PLAN

SCALE: 3/8" = 1'-0"

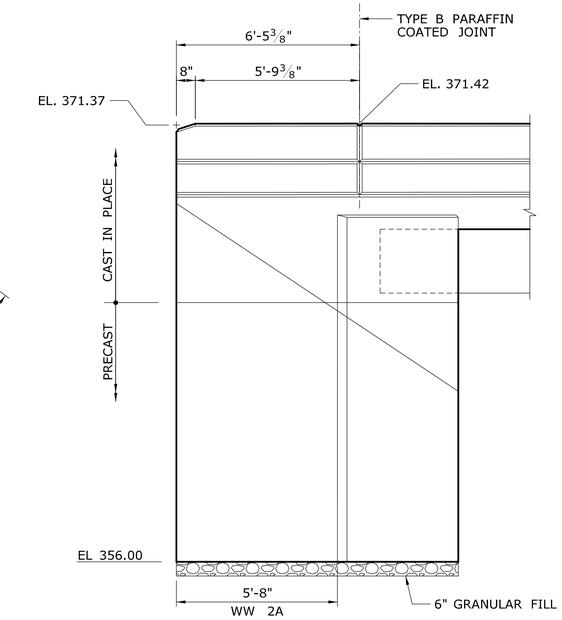

WINGWALL 2A DEVELOPED ELEVATION

SCALE: 3/8" = 1'-0"

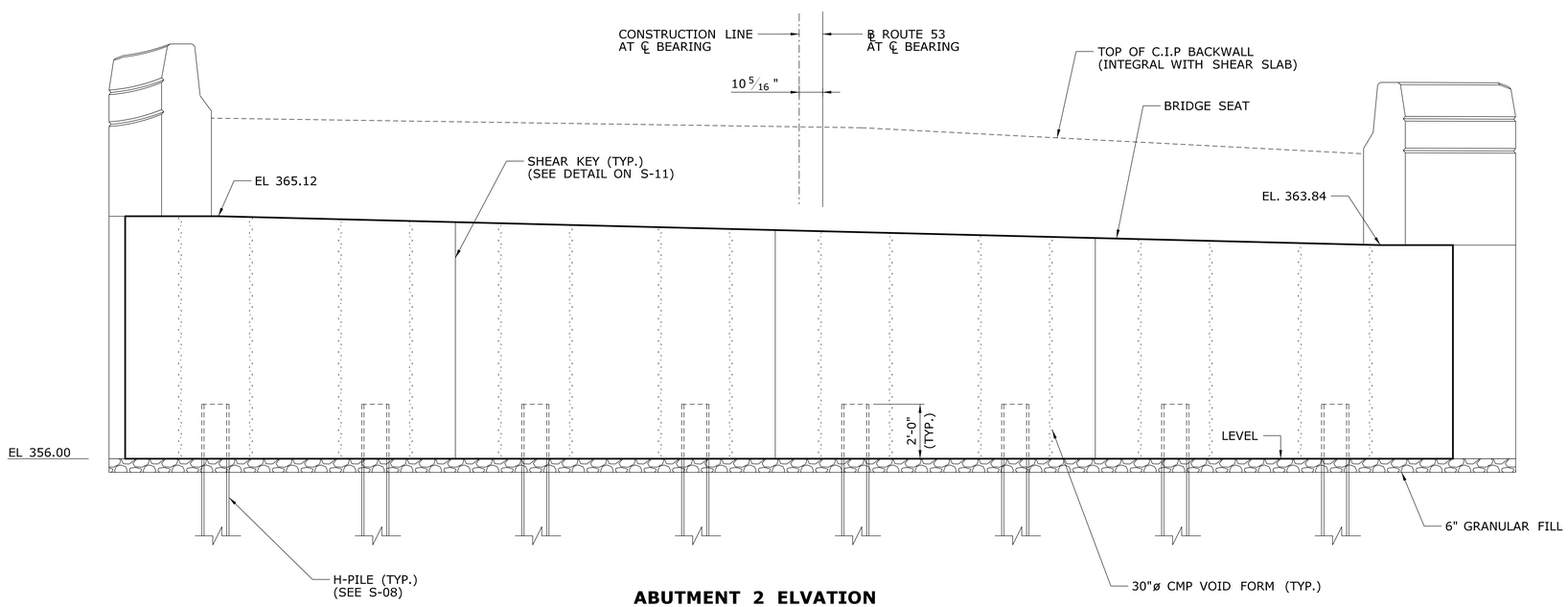

ABUTMENT 2 ELVATION

SCALE: 3/8" = 1'-0"

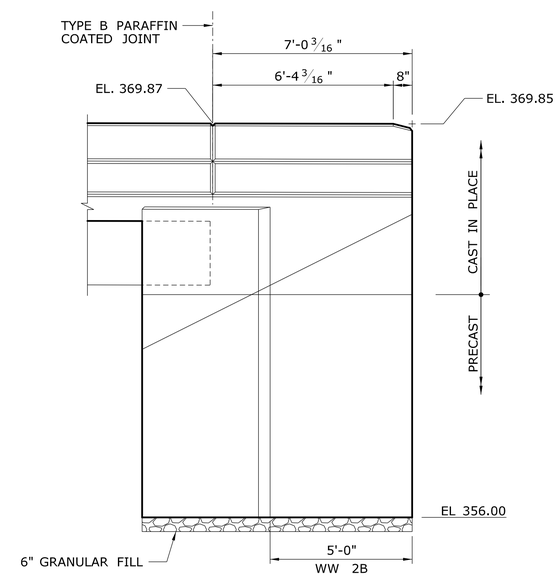

WINGWALL 2B DEVELOPED ELEVATION

SCALE: 3/8" = 1'-0"

REV.	DATE	REVISION DESCRIPTION	SHEET NO.
-	-	-	-
-	-	-	-
-	-	-	-
-	-	-	-
-	-	-	-
-	-	-	-

THE INFORMATION, INCLUDING ESTIMATED QUANTITIES OF WORK, SHOWN ON THESE SHEETS IS BASED ON LIMITED INVESTIGATIONS BY THE STATE AND IS IN NO WAY WARRANTED TO INDICATE THE CONDITIONS OF ACTUAL QUANTITIES OF WORK WHICH WILL BE REQUIRED.

Plotted Date: 7/29/2015

DESIGNER/DRAFTER: JRA

CHECKED BY: AML

SCALE AS NOTED

STATE OF CONNECTICUT
DEPARTMENT OF TRANSPORTATION

Filename: ..\S-10 ABUTMENT 2.dgn

SIGNATURE/BLOCK:

Stantec Consulting Services Inc.
55 Church Street
Suite 601
New Haven, CT 06510

PROJECT TITLE:

REPLACEMENT OF BRIDGE NO. 01018, ROUTE 53 OVER SAUGATUCK RIVER

TOWN: **REDDING**

DRAWING TITLE: **ABUTMENT 2**

PROJECT NO. **116-133**

DRAWING NO. **S-10**

SHEET NO. **04.10**

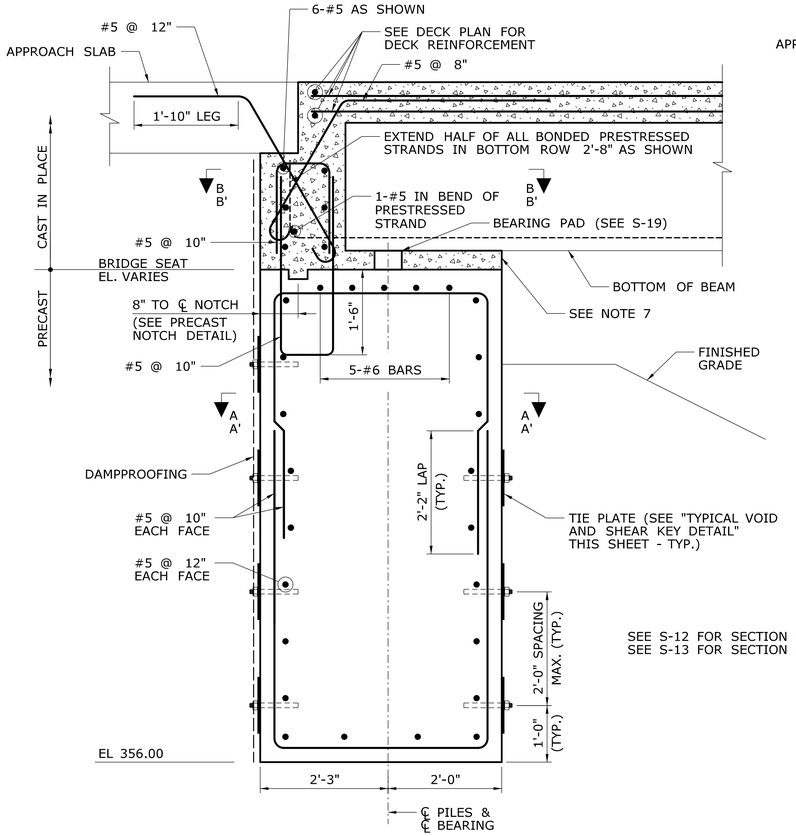

TYPICAL ABUTMENT SECTION

SCALE: 3/4" = 1'-0"

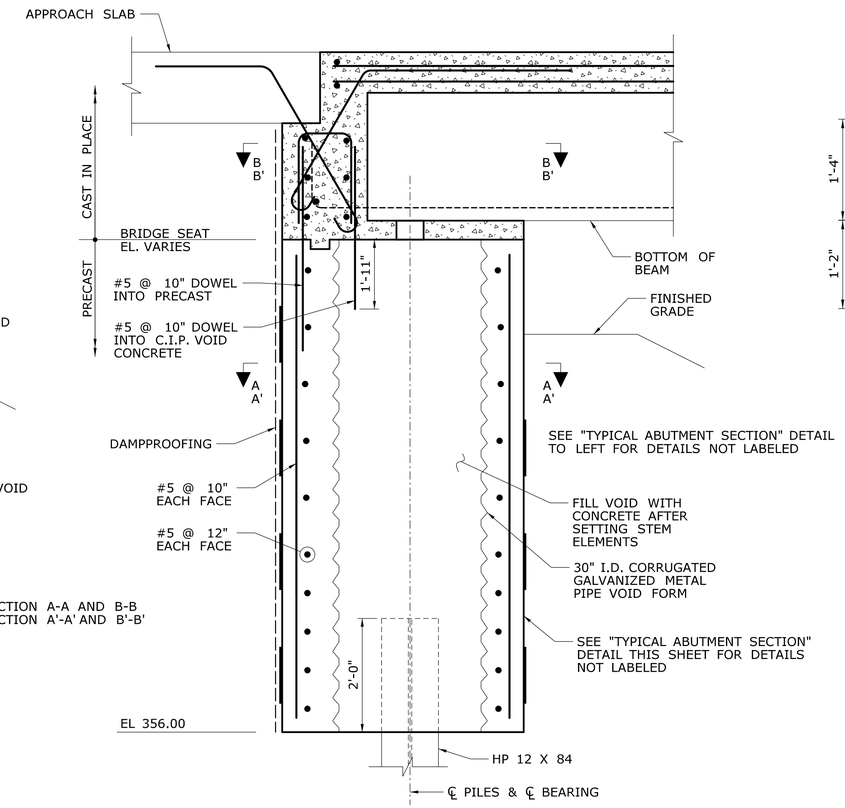

TYPICAL ABUTMENT SECTION AT VOID

SCALE: 3/4" = 1'-0"

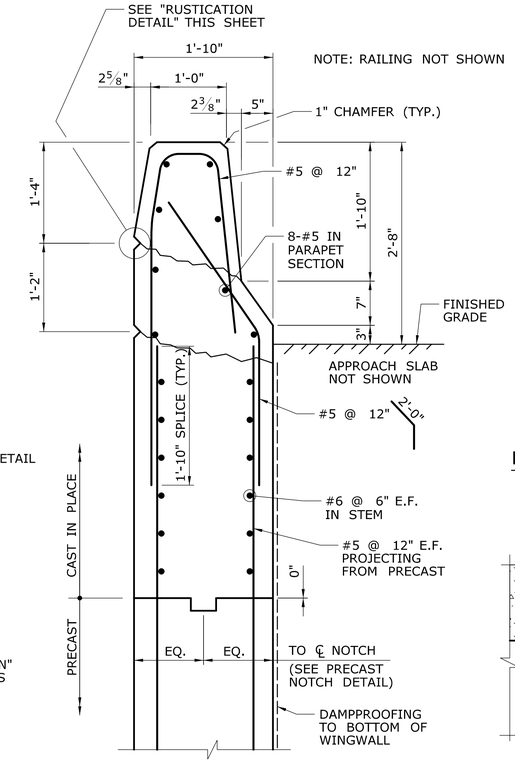

TYPICAL WINGWALL SECTION

SCALE: 1" = 1'-0"

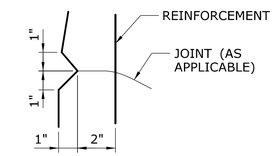

RUSTICATION DETAIL

SCALE: 3" = 1'-0"

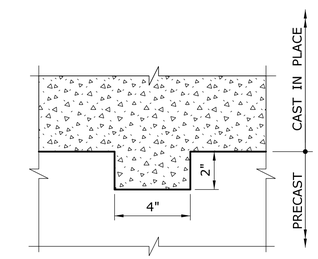

PRECAST NOTCH DETAIL

SCALE: 3" = 1'-0"

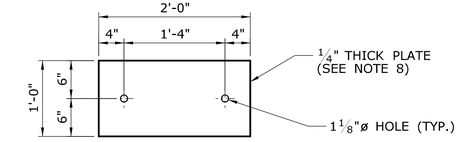

TIE PLATE DETAIL

SCALE: 1" = 1'-0"

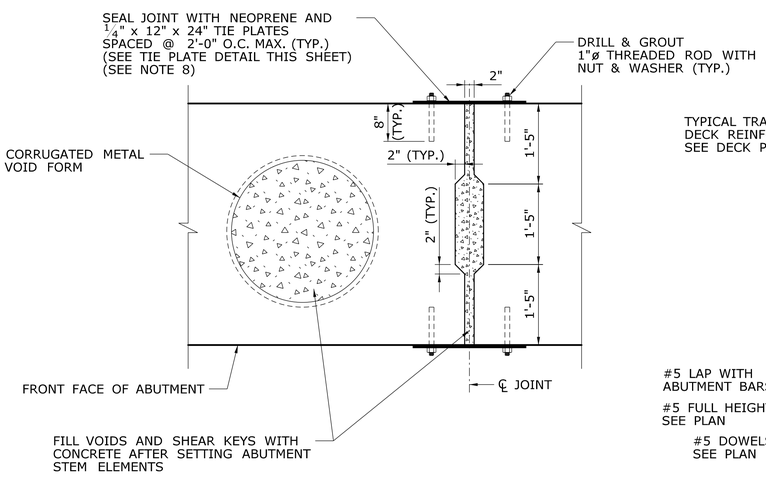

TYPICAL VOID AND SHEAR KEY DETAIL

SCALE: 3/4" = 1'-0"

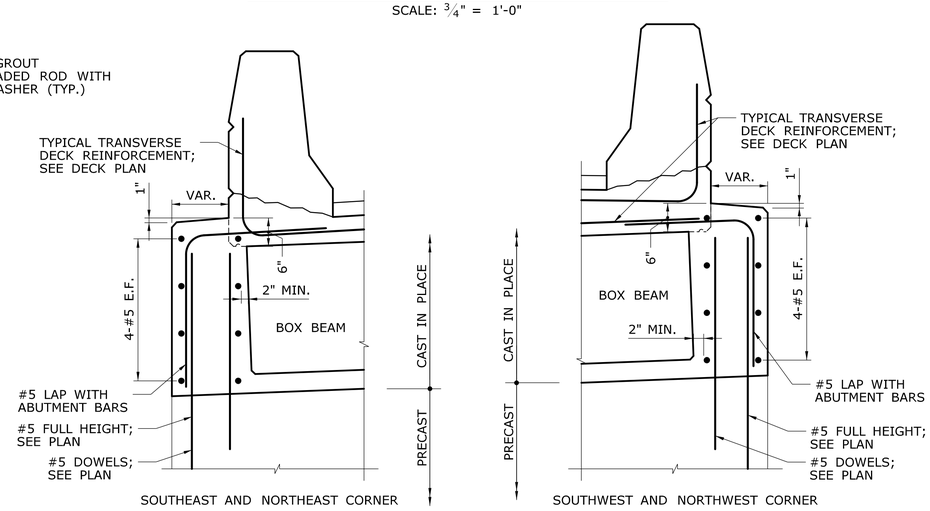

CHEEKWALL SECTIONS - LOOKING SOUTH

SCALE: 3/4" = 1'-0"

ABUTMENT NOTES:

1. PRECAST ABUTMENTS SHALL BE PAID FOR UNDER THE LUMP SUM ITEM "PRECAST SUBSTRUCTURE ELEMENTS", AND SHALL INCLUDE ALL PRECAST CONCRETE, REINFORCEMENT CAST WITH PRECAST UNITS, CORRUGATED METAL PIPE VOID FORMS AND NEOPRENE SHEET SEAL.
2. PRECAST CONCRETE SHALL HAVE A MINIMUM 28-DAY COMPRESSIVE STRENGTH OF 4,000 PSI.
3. CONCRETE USED TO FILL VOIDS SHALL CONFORM TO THE REQUIREMENTS OF CLASS "F" CONCRETE, AND SHALL BE PAID FOR UNDER THE ITEM "CLASS 'F' CONCRETE".
4. CONCRETE FOR PARAPETS SHALL BE PAID FOR UNDER THE ITEM "CLASS 'F' CONCRETE".
5. REINFORCEMENT USED FOR PRECAST ABUTMENTS SHALL BE UNCOATED.
6. CLASS "F" CONCRETE SHALL BE PLACED ABOVE THE BRIDGE SEAT TO FORM THE BACKWALL AND BRIDGE DECK.
7. VENT HOLES SHALL BE PROVIDED IN THE FRONT FACE FORM UNDER EACH BEAM TO ALLOW INSERTING A 1" ø VIBRATOR TO FACILITATE CONSOLIDATION OF CONCRETE BETWEEN THE BRIDGE SEAT AND BOTTOM OF BEAM.
8. THE COST OF TIE PLATES, INCLUDING INSTALLATION, MATERIALS AND ALL INCIDENTAL EQUIPMENT, TOOLS AND LABOR, SHALL BE PAID FOR UNDER THE ITEM "PRECAST SUBSTRUCTURE ELEMENTS".

REV.	DATE	REVISION DESCRIPTION	SHEET NO.
-	-	-	-
-	-	-	-
-	-	-	-
-	-	-	-
-	-	-	-
-	-	-	-

THE INFORMATION, INCLUDING ESTIMATED QUANTITIES OF WORK, SHOWN ON THESE SHEETS IS BASED ON LIMITED INVESTIGATIONS BY THE STATE AND IS IN NO WAY WARRANTED TO INDICATE THE CONDITIONS OF ACTUAL QUANTITIES OF WORK WHICH WILL BE REQUIRED.

Plotted Date: 7/29/2015

DESIGNER/DRAFTER: JRA
CHECKED BY: AML
SCALE AS NOTED

STATE OF CONNECTICUT
DEPARTMENT OF TRANSPORTATION

Filename: ...\S-11 ABUTMENT DETAILS - 1.dgn

SIGNATURE/BLOCK:
Stantec Consulting Services Inc.
55 Church Street
Suite 601
New Haven, CT 06510

PROJECT TITLE:
REPLACEMENT OF BRIDGE NO. 01018, ROUTE 53 OVER SAUGATUCK RIVER

TOWN: REDDING

DRAWING TITLE: ABUTMENT DETAILS - 1

PROJECT NO. 116-133
DRAWING NO. S-11
SHEET NO. 04.11

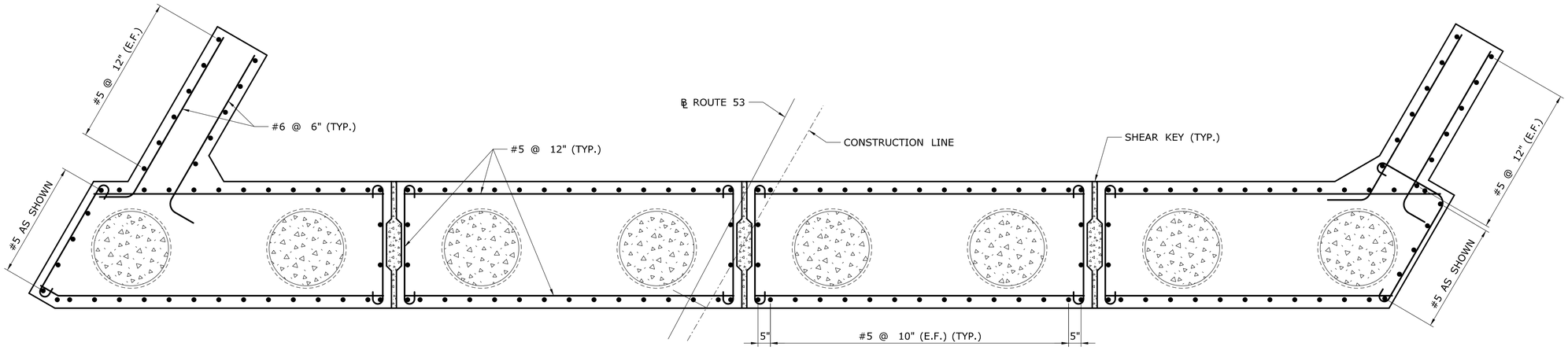

SECTION A-A - ABUTMENT 1 (PRECAST) - BELOW BRIDGE SEAT

SCALE: ½" = 1'-0"

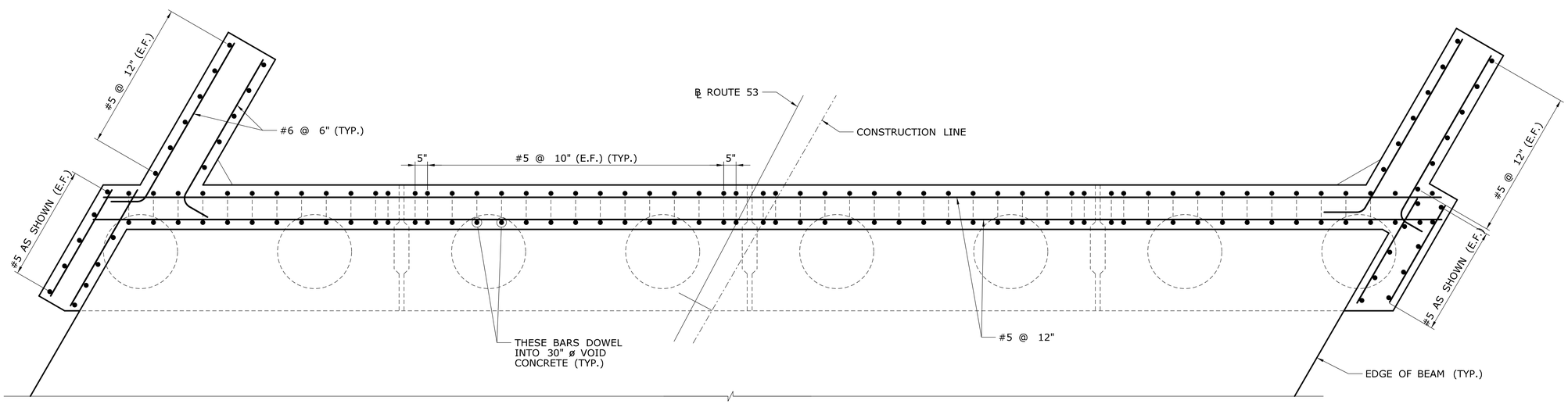

ALL BARS LAP WITH PRECAST DOWELS UNLESS NOTED OTHERWISE

SECTION B-B - ABUTMENT 1 (CAST-IN-PLACE) - ABOVE BRIDGE SEAT

SCALE: ½" = 1'-0"

REV.	DATE	REVISION DESCRIPTION	SHEET NO.
-	-	-	-
-	-	-	-
-	-	-	-
-	-	-	-
-	-	-	-
-	-	-	-

THE INFORMATION, INCLUDING ESTIMATED QUANTITIES OF WORK, SHOWN ON THESE SHEETS IS BASED ON LIMITED INVESTIGATIONS BY THE STATE AND IS IN NO WAY WARRANTED TO INDICATE THE CONDITIONS OF ACTUAL QUANTITIES OF WORK WHICH WILL BE REQUIRED.

Plotted Date: 7/29/2015

DESIGNER/DRAFTER: **JRA**

CHECKED BY: **AML**

SCALE AS NOTED

STATE OF CONNECTICUT
DEPARTMENT OF TRANSPORTATION

Filename: ...\S-12 ABUTMENT DETAILS - 2.dgn

SIGNATURE/ BLOCK:

STATE OF CONNECTICUT · BRIAN M. LEVERD · REGISTERED PROFESSIONAL ENGINEER · LICENSE NO. 28,000

Stantec Consulting Services Inc.
55 Church Street
Suite 601
New Haven, CT 06510

PROJECT TITLE:

REPLACEMENT OF BRIDGE NO. 01018, ROUTE 53 OVER SAUGATUCK RIVER

TOWN: **REDDING**

DRAWING TITLE: **ABUTMENT DETAILS - 2**

PROJECT NO. **116-133**

DRAWING NO. **S-12**

SHEET NO. **04.12**

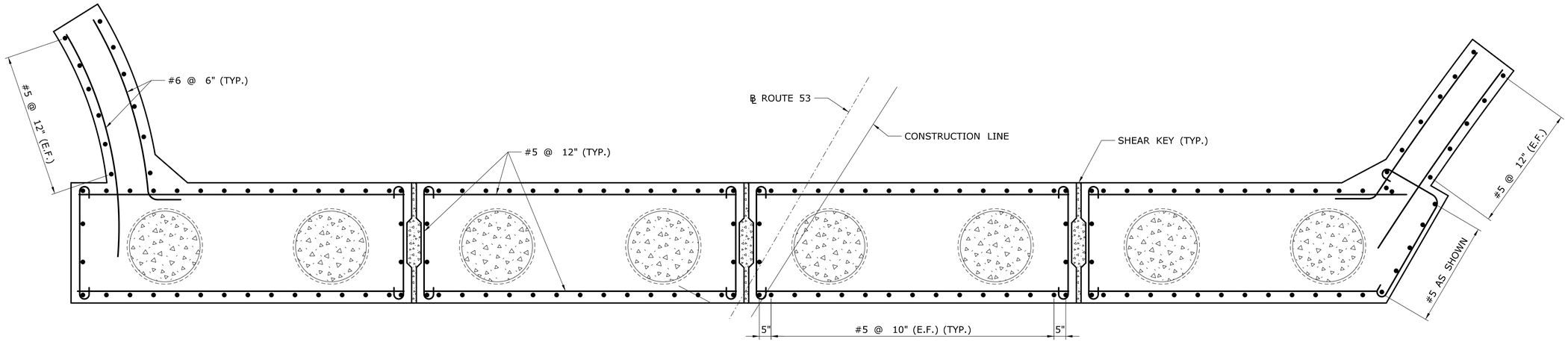

SECTION A'-A' - ABUTMENT 2 (PRECAST) - BELOW BRIDGE SEAT

SCALE: ½" = 1'-0"

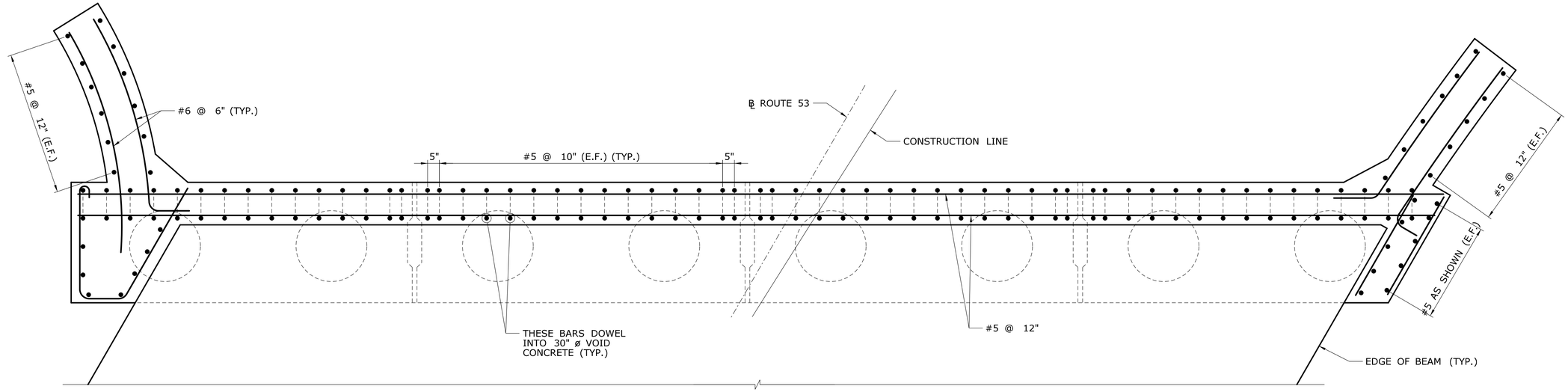

ALL BARS LAP WITH PRECAST DOWELS UNLESS NOTED OTHERWISE

SECTION B'-B' - ABUTMENT 2 (CAST-IN-PLACE) - ABOVE BRIDGE SEAT

SCALE: ½" = 1'-0"

REV.	DATE	REVISION DESCRIPTION	SHEET NO.
-	-	-	-
-	-	-	-
-	-	-	-
-	-	-	-
-	-	-	-
-	-	-	-

THE INFORMATION, INCLUDING ESTIMATED QUANTITIES OF WORK, SHOWN ON THESE SHEETS IS BASED ON LIMITED INVESTIGATIONS BY THE STATE AND IS IN NO WAY WARRANTED TO INDICATE THE CONDITIONS OF ACTUAL QUANTITIES OF WORK WHICH WILL BE REQUIRED.

Plotted Date: 7/29/2015

DESIGNER/DRAFTER: **JRA**

CHECKED BY: **AML**

SCALE AS NOTED

STATE OF CONNECTICUT
DEPARTMENT OF TRANSPORTATION

Filename: ...\S-13 ABUTMENT DETAILS - 3.dgn

SIGNATURE/ BLOCK:

Stantec Consulting Services Inc.
55 Church Street
Suite 601
New Haven, CT 06510

PROJECT TITLE:

REPLACEMENT OF BRIDGE NO. 01018, ROUTE 53 OVER SAUGATUCK RIVER

TOWN: **REDDING**

DRAWING TITLE: **ABUTMENT DETAILS - 3**

PROJECT NO. **116-133**

DRAWING NO. **S-13**

SHEET NO. **04.13**

1. PRECAST ABUTMENT
2. PILE VOIDS AND ABUTMENT SHEAR KEYS (NOT SHOWN)
3. SHEAR SLAB AND ABUTMENT 2 BACKWALL, CHEEKWALLS, AND PORTION OF WINGWALLS 2A & 2B
4. ABUTMENT 1 BACKWALL, CHEEKWALLS, AND PORTION OF WINGWALLS 1A & 1B
5. REMAINING PARAPET POUR(S) AND APPROACH SLABS

WINGWALL 1B SHOWN, OTHER WINGWALLS SIMILAR

NOTE: WORK THIS SEQUENCE WITH SEQUENCE INDICATED ON S-23.

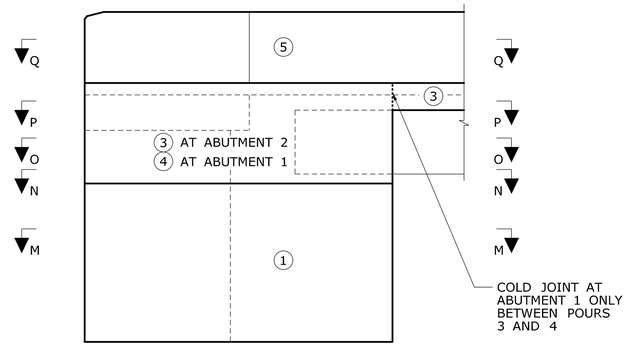

INTEGRAL ABUTMENT POUR SEQUENCE

NOT TO SCALE

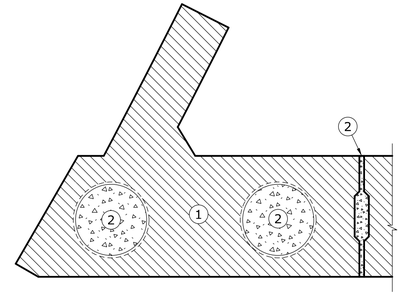

SECTION M-M

SCALE: 3/8" = 1'-0"

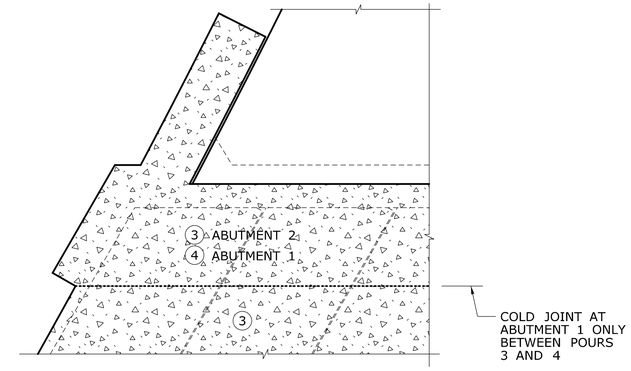

SECTION P-P

SCALE: 3/8" = 1'-0"

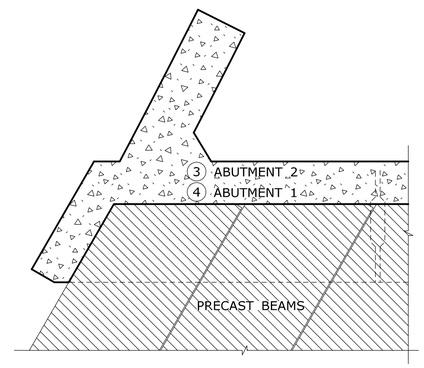

SECTION N-N

SCALE: 3/8" = 1'-0"

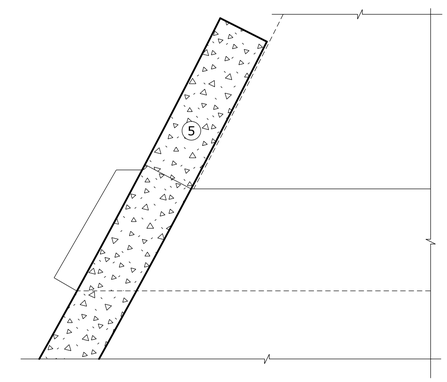

SECTION Q-Q

SCALE: 3/8" = 1'-0"

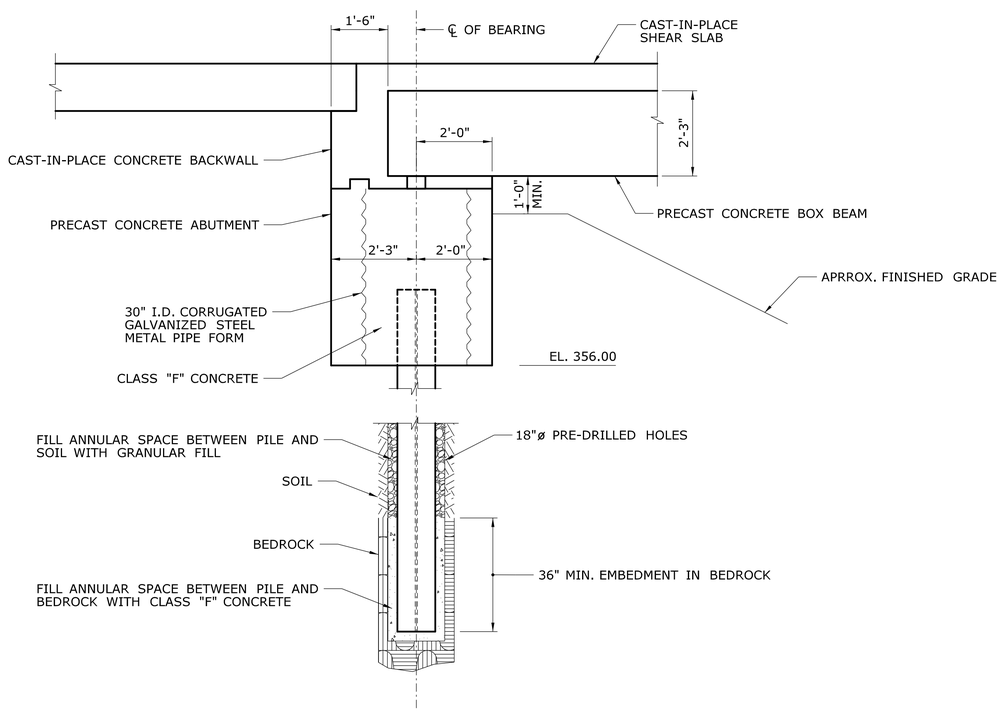

TYPICAL ABUTMENT/PILE SECTION

NOT TO SCALE

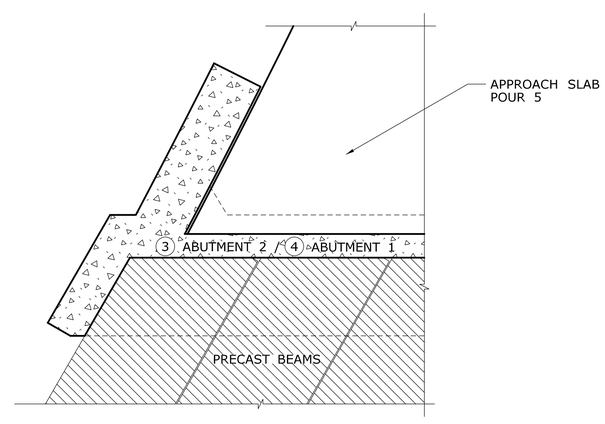

SECTION O-O

SCALE: 3/8" = 1'-0"

REV.	DATE	REVISION DESCRIPTION	SHEET NO.
-	-	-	-
-	-	-	-
-	-	-	-
-	-	-	-
-	-	-	-
-	-	-	-

THE INFORMATION, INCLUDING ESTIMATED QUANTITIES OF WORK, SHOWN ON THESE SHEETS IS BASED ON LIMITED INVESTIGATIONS BY THE STATE AND IS IN NO WAY WARRANTED TO INDICATE THE CONDITIONS OF ACTUAL QUANTITIES OF WORK WHICH WILL BE REQUIRED.

Plotted Date: 7/29/2015

DESIGNER/DRAFTER: JRA
CHECKED BY: AML
SCALE AS NOTED

STATE OF CONNECTICUT
DEPARTMENT OF TRANSPORTATION

Filename: ...\S-14 ABUTMENT DETAILS - 4.dgn

SIGNATURE/BLOCK:

Stantec Consulting Services Inc.
55 Church Street
Suite 601
New Haven, CT 06510

PROJECT TITLE:
REPLACEMENT OF BRIDGE NO. 01018, ROUTE 53 OVER SAUGATUCK RIVER

TOWN: REDDING

DRAWING TITLE: ABUTMENT DETAILS - 4

PROJECT NO. 116-133
DRAWING NO. S-14
SHEET NO. 04.14

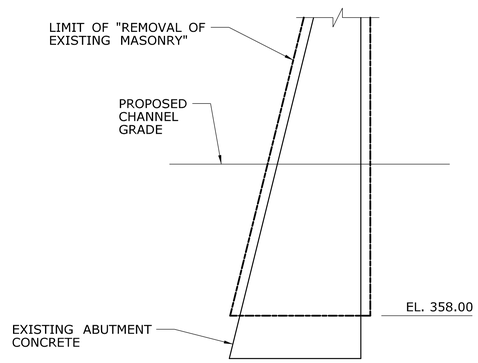

PAY LIMITS AT EXISTING ABUTMENT

NOT TO SCALE

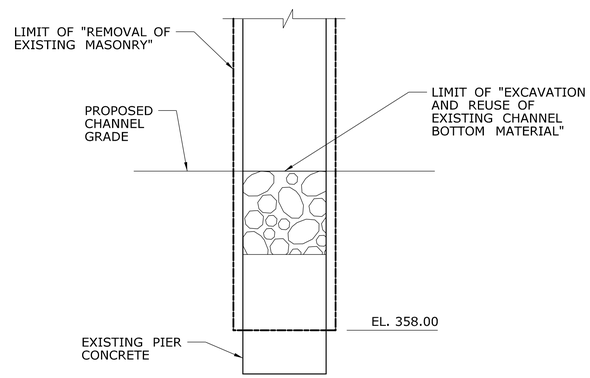

PAY LIMITS AT EXISTING PIER

NOT TO SCALE

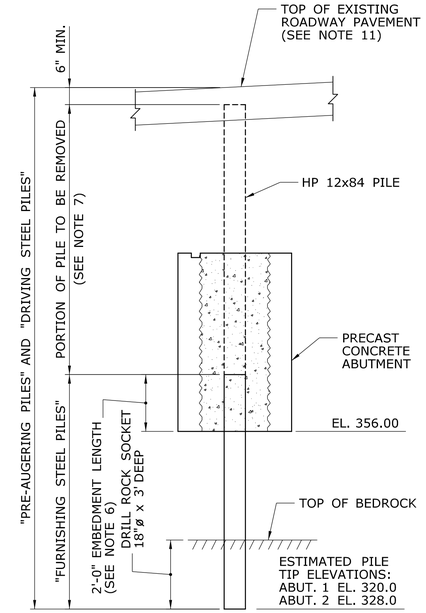

PILE PAY LIMITS

NOT TO SCALE

PAY LIMIT NOTES:

1. REMOVAL OF EXISTING SUPERSTRUCTURE, INCLUDING CONCRETE PARAPETS, SHALL BE PAID FOR UNDER THE ITEM "REMOVAL OF EXISTING SUPERSTRUCTURE".
2. REMOVAL OF THE EXISTING ABUTMENTS, PIER AND WINGWALLS SHALL BE PAID FOR UNDER THE ITEM "REMOVAL OF EXISTING MASONRY". ALL PORTIONS OF EXISTING MASONRY SHALL BE REMOVED TO 1 FOOT BELOW THE NATURAL STREAMBED MATERIAL, OR AS DIRECTED BY THE ENGINEER. IN THE EVENT OF A CONFLICT BETWEEN EXISTING AND PROPOSED STRUCTURES, THE CONTRACTOR SHALL REMOVE THE EXISTING MASONRY FULL DEPTH AND TO A MINIMUM HORIZONTAL DISTANCE OF 2 FEET AWAY FROM PROPOSED SUBSTRUCTURES.
3. FOR EACH STEEL PILE, THE COST OF FURNISHING, DELIVERY, STORAGE, HANDLING AND ALL INCIDENTAL MATERIALS, EQUIPMENT, TOOLS AND LABOR SHALL BE INCLUDED IN THE COST OF "FURNISHING STEEL PILES". FURNISHING OF TEST PILES SHALL BE INCLUDED IN THE APPLICABLE TEST PILE ITEM.
4. THE COST OF DRIVING PILES AND ALL INCIDENTAL MATERIALS, EQUIPMENT, TOOLS AND LABOR SHALL BE INCLUDED IN THE COST OF "DRIVING STEEL PILES". DRIVING OF TEST PILES SHALL BE INCLUDED IN THE APPLICABLE TEST PILE ITEM.
5. THE COST OF AUGERING HOLES FOR THE INSTALLATION OF PILES AND ALL INCIDENTAL MATERIALS INCLUDING BACKFILL MATERIAL, EQUIPEMENT, TOOLS AND LABOR SHALL BE INCLUDED IN THE COST OF "PRE-AUGERING OF PILES".
6. EMBEDMENT LENGTH OF EACH PILE INTO THE ABUTMENT CONCRETE IS INCIDENTAL AND SHALL NOT BE MEASURED FOR PAYMENT.
7. A PORTION OF EACH PILE SHALL BE REMOVED, AS SHOWN, AFTER INITIAL INSTALLATION IN ORDER TO ESTABLISH FINAL PILE LENGTH. THE COST OF FURNISHING THIS ADDITIONAL PILE LENGTH, INCLUDING CUTTING OF PILES, SHALL NOT BE MEASURED FOR PAYMENT.
8. THE CONTRACTOR SHALL WORK AROUND THE EXISTING CONCRETE WHEREVER POSSIBLE DURING INSTALLATION OF PILES. IF ALTERING EXISTING CONCRETE IS REQUIRED IN ORDER TO ACCOMMODATE PILE INSTALLATION, THEN THE CONTRACTOR SHALL RESTORE THE ALTERED CONCRETE PRIOR TO REOPENING THE ROADWAY TO TRAFFIC. ANY SUCH WORK SHALL OCCUR AT NO ADDITIONAL COST TO THE STATE.
9. AFTER INITIAL INSTALLATION OF EACH PILE, FILL AND COMPACT AUGERED HOLES COMPLETELY AND PATCH HOLES IN EXISTING BITUMINOUS PAVEMENT WITH COLD PATCH PRIOR TO REESTABLISHING TRAFFIC. THIS WORK SHALL NOT BE MEASURED FOR PAYMENT, THE COST OF WHICH SHALL BE INCLUDED IN THE ITEM "DRIVING STEEL PILES".
10. THE COST OF CAST-IN-PLACE CONCRETE PORTION OF WINGWALLS, DECK, APPROACH SLABS AND INTEGRAL ABUTMENT POUR SHALL BE INCLUDED IN THE COST OF "CLASS 'F' CONCRETE".
11. THE COST OF PRECAST CONCRETE PORTION OF WINGWALLS AND ABUTMENTS SHALL BE INCLUDED IN THE COST OF "PRECAST CONCRETE SUBSTRUCTURE ELEMENTS".
12. THE COST OF PRECAST, PRESTRESSED BOX BEAMS SHALL BE INCLUDED IN THE COST OF "PRESTRESSED DECK UNITS (X'-X" x X'-X")".

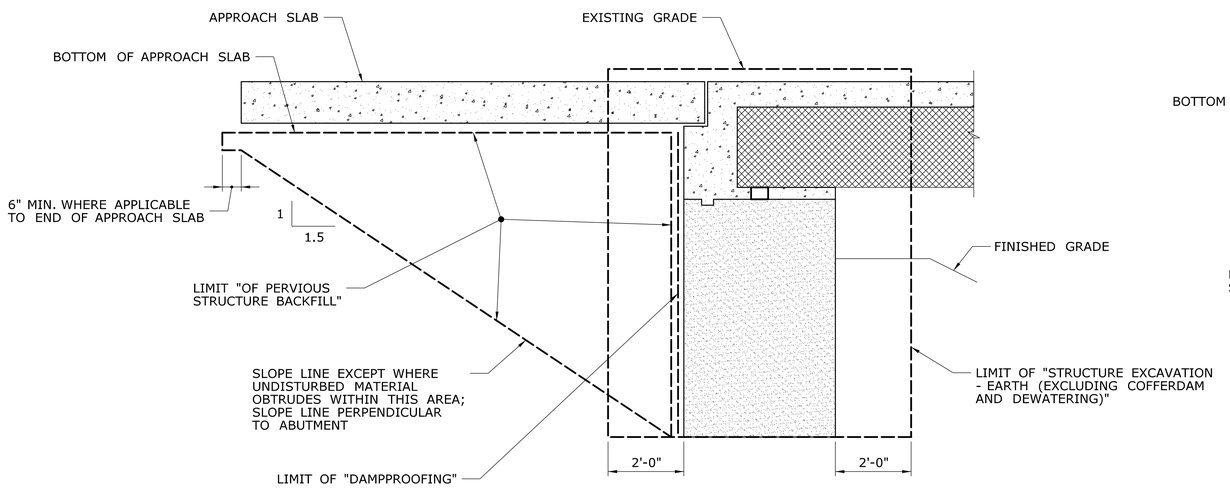

PAY LIMITS AT ABUTMENT

NOT TO SCALE

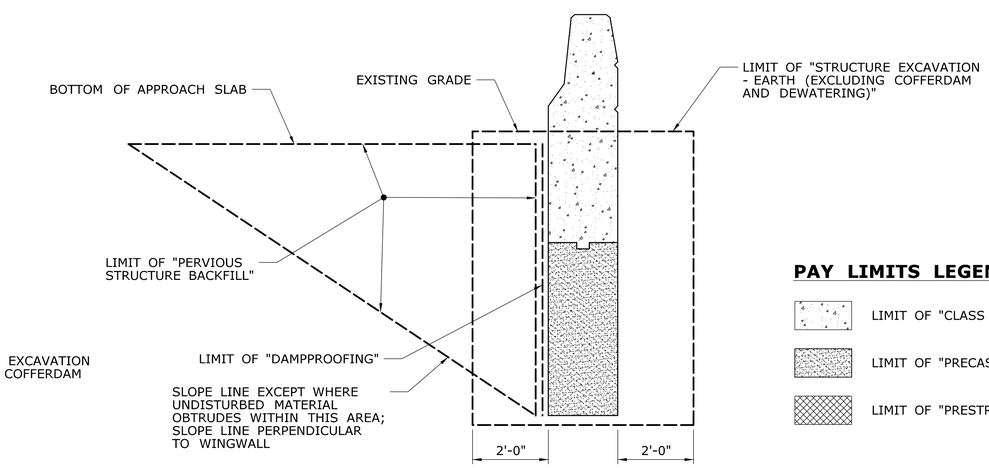

PAY LIMITS AT WINGWALL

NOT TO SCALE

PAY LIMITS LEGEND:

- LIMIT OF "CLASS 'F' CONCRETE"
- LIMIT OF "PRECAST SUBSTRUCTURE ELEMENTS"
- LIMIT OF "PRESTRESSED DECK UNITS (X'-X" x X'-X")"

REV.	DATE	REVISION DESCRIPTION	SHEET NO.
-	-	-	-
-	-	-	-
-	-	-	-
-	-	-	-
-	-	-	-
-	-	-	-

THE INFORMATION, INCLUDING ESTIMATED QUANTITIES OF WORK, SHOWN ON THESE SHEETS IS BASED ON LIMITED INVESTIGATIONS BY THE STATE AND IS IN NO WAY WARRANTED TO INDICATE THE CONDITIONS OF ACTUAL QUANTITIES OF WORK WHICH WILL BE REQUIRED.

Plotted Date: 7/29/2015

DESIGNER/DRAFTER: **JRA**

CHECKED BY: **AML**

SCALE AS NOTED

STATE OF CONNECTICUT
DEPARTMENT OF TRANSPORTATION

Filename: ...\S-15 PAY LIMITS.dgn

SIGNATURE/ BLOCK:

Stantec Consulting Services Inc.
55 Church Street
Suite 601
New Haven, CT 06510

PROJECT TITLE:

REPLACEMENT OF BRIDGE NO. 01018, ROUTE 53 OVER SAUGATUCK RIVER

TOWN: **REDDING**

DRAWING TITLE: **PAY LIMITS**

PROJECT NO. **116-133**

DRAWING NO. **S-15**

SHEET NO. **04.15**

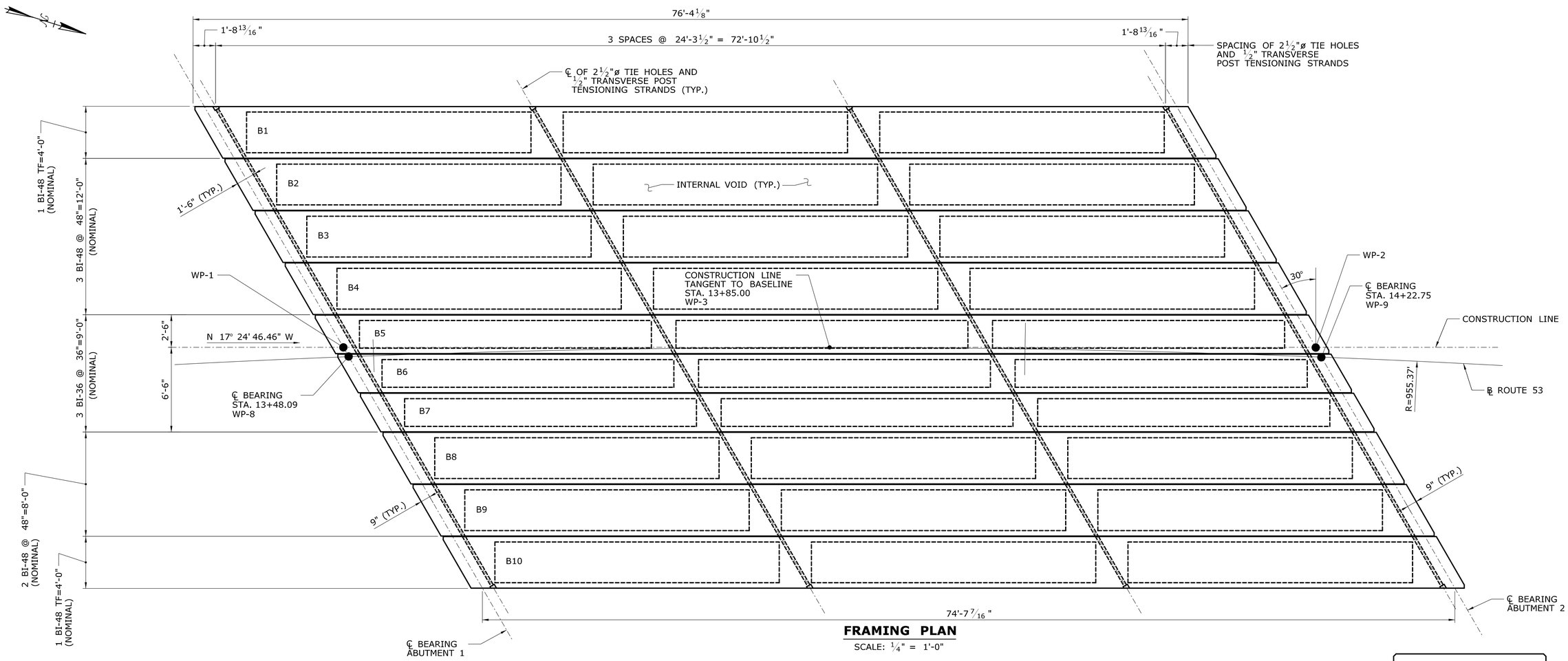

FRAMING PLAN

SCALE: 1/4" = 1'-0"

PRESTRESSED CONCRETE BOX BEAM NOTES:

1. PRESTRESSED CONCRETE FOR BOX BEAMS SHALL CONFORM TO THE FOLLOWING REQUIREMENTS:

   MINIMUM COMPRESSIVE STRENGTH AT TRANSFER (f'ci) = 5,000 PSI
   MINIMUM 28 DAY COMPRESSIVE STRENGTH (f'c) = 8,000 PSI

2. PRESTRESSING STRANDS SHALL BE 1/2"ø, 7 WIRE, UNCOATED, LOW RELAXATION STRANDS CONFORMING THE REQUIREMENTS OF AASHTO 203 (ASTM A416), GRADE 270, AND SHALL CONFORM TO THE FOLLOWING REQUIREMENTS:

   ULTIMATE JACKING STRENGTH (fs) = 270 KSI
   INITIAL JACKING TENSION = 30.98 KIPS

3. PRESTRESSING STRANDS SHALL BE PLACED AT 2" ON CENTER MINIMUM, SHALL HAVE A MINIMUM COVER OF 1 1/2", SHALL BE DISTRIBUTED OVER THE BEAM WIDTH AS EVENLY AS POSSIBLE, AND SHALL HAVE STRAND PATTERNS THAT ARE SYMMETRICAL ABOUT THE CENTERLINE OF THE BEAM.

4. DEBONDED STRANDS SHALL BE SYMMETRICALLY DISTRIBUTED ABOUT THE CENTERLINE OF THE BEAM. EXTERIOR STRANDS OF EACH HORIZONTAL ROW SHALL BE FULLY BONDED. NO ADJACENT STRANDS IN THE SAME ROW SHALL BE DEBONDED.

5. ALL NON-PRESTRESSED REINFORCEMENT SHALL CONFORM TO ASTM A615 GRADE 60 AND SHALL HAVE A MINIMUM COVER OF 2" UNLESS OTHERWISE NOTED.

6. ALL NON-PRESTRESSED REINFORCEMENT IN THE PRESTRESSED BEAMS INCLUDING STIRRUPS, BAR TIES AND CHAIRS, SHALL BE EPOXY COATED AND SHALL BE INCLUDED IN THE ITEMS "PRESTRESSED DECK UNITS (4'-0" x 2'-3")" AND "PRESTRESSED DECK UNITS (3'-0" x 2'-3")" AS APPLICABLE.

7. ENDS OF THE PRESTRESSED BOX BEAMS SHALL BE VERTICAL UPON APPLICATION OF FULL DEAD LOADS.

8. IT IS NOT INTENDED THAT THE BOX BEAMS BE INSTALLED IN CONTACT WITH EACH OTHER, BUT RATHER THAT THE CENTERLINE DISTANCE BETWEEN EACH BE 4'-0", 3'-6" OR 3'-0" AS APPLICABLE.

9. NO ADDITIONAL DEAD LOADS OR LIVE LOADS SHALL BE APPLIED TO THE BOX BEAMS UNTIL THE TRANSVERSE TIES HAVE BEEN FULLY TENSIONS AND THE GROUT IN THE LONGITUDINAL SHEAR KEYS HAS REACHED A 7 DAY COMPRESSIVE STRENGTH OF 4,500 PSI.

10. POCKETS FOR TRANSVERSE TIE ANCHORAGE SHALL BE DRY PACKED WITH NON-SHRINK GROUT FLUSH WITH THE EXTERIOR SURFACE OF THE FASCIA BEAMS AFTER TRANSFER OF TENSIONING HAS BEEN COMPLETED.

11. THE CONTRACTOR MAY SUBMIT FOR REVIEW AN ALTERNATE PRESTRESSED BOX BEAM DESIGN USING DEBONDED AND/OR DRAPED STRANDS. THE MAXIMUM NUMBER OF DEBONDED STRANDS SHALL BE 25% OF THE TOTAL NUMBER OF STRANDS. ALL DEBONDING SHALL BE LOCATED WITHIN A DISTANCE OF 15% OF THE SPAN LENGTH FROM THE END OF THE MEMBER. IF DRAPED STRANDS ARE USED, THE TOTAL HOLD DOWN FORCE OF ALL THE DRAPED STRANDS SHALL NOT EXCEED 75% OF THE TOTAL WEIGHT OF THE MEMBER. SEE SPECIAL PROVISIONS FOR THE DESIGN AND PLAN SUBMISSION REQUIREMENTS.

CAMBER NOTES:

1. 'AT TRANSFER' INDICATES CAMBER DUE TO PRESTRESSING FORCE AT TRANSFER MINUS DEFLECTION DUE TO BEAM SELF WEIGHT.
2. 'AT ERECTION' INDICATES CAMBER DUE TO PRESTRESSING FORCE MINUS DEFLECTION DUE TO BEAM SELF WEIGHT APPROXIMATELY 30 DAYS AFTER TRANSFER.
3. 'FINAL' INDICATES LONG-TERM CAMBER PRESENT AFTER ALL DEAD LOADS ARE APPLIED TO THE STRUCTURE.
4. POSITIVE CAMBER INDICATES UPWARD DEFLECTION.

DEFLECTION NOTES:

1. 'GIRDER DL' INDICATES LONG-TERM DEFLECTION DUE TO PRESTRESSING FORCE MINUS DEFLECTION DUE TO BEAM SELF WEIGHT.
2. 'ADD'L DL' INDICATES LONG-TERM DEFLECTION DUE TO THE DECK SLAB CONCRETE.
3. 'COMPOSITE DL' INDICATES THE LONG-TERM DEFLECTION DUE TO THE PARAPETS AND BITUMINOUS OVERLAY.
4. POSITIVE DEFLECTION INDICATES UPWARD DEFLECTION.

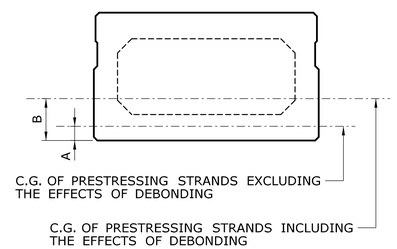

PRESTRESSED BEAM DATA

	STRAND DATA		AT MIDSPAN	AT END				ESTIMATED CAMBER AT MIDSPAN			FINAL ESTIMATED DEFLECTION AT MIDSPAN		
BEAM TYPE	TYPE	NO. OF STRANDS	DIM. "A"	NO. OF DEBONDED STRANDS	DIM. "A"	DIM. "B"	DEBONDING LENGTH	AT TRANSFER	AT ERECTION	FINAL	GIRDER DL	ADD'L DL	COMPOSITE DL
BI-48	STRAIGHT	38	3.89"	6	3.89"	4.25"	8'-0"	1.768"	3.176"	0.096"	3.404"	-2.347"	-0.960"
BI-36	STRAIGHT	34	4.24"	8	4.24"	4.77"	14'-0"	1.998"	3.556"	0.342"	3.917"	-2.315"	-1.261"
BI-48TF	STRAIGHT	40	4.20"	10	4.20"	4.67"	8'-0"	1.696"	2.998"	-0.109"	3.202"	-2.390"	-0.921"

REV.	DATE	REVISION DESCRIPTION	SHEET NO.
-	-	-	-
-	-	-	-
-	-	-	-
-	-	-	-
-	-	-	-
-	-	-	-

THE INFORMATION, INCLUDING ESTIMATED QUANTITIES OF WORK, SHOWN ON THESE SHEETS IS BASED ON LIMITED INVESTIGATIONS BY THE STATE AND IS IN NO WAY WARRANTED TO INDICATE THE CONDITIONS OF ACTUAL QUANTITIES OF WORK WHICH WILL BE REQUIRED.

Plotted Date: 7/29/2015

DESIGNER/DRAFTER: JRA
CHECKED BY: AML
SCALE AS NOTED

STATE OF CONNECTICUT
DEPARTMENT OF TRANSPORTATION

Filename: ...\S-16 FRAMING PLAN.dgn

SIGNATURE/BLOCK:

Stantec Consulting Services Inc.
55 Church Street
Suite 601
New Haven, CT 06510

PROJECT TITLE:
REPLACEMENT OF BRIDGE NO. 01018, ROUTE 53 OVER SAUGATUCK RIVER

TOWN: **REDDING**

DRAWING TITLE: **FRAMING PLAN**

PROJECT NO. 116-133
DRAWING NO. S-16
SHEET NO. 04.16

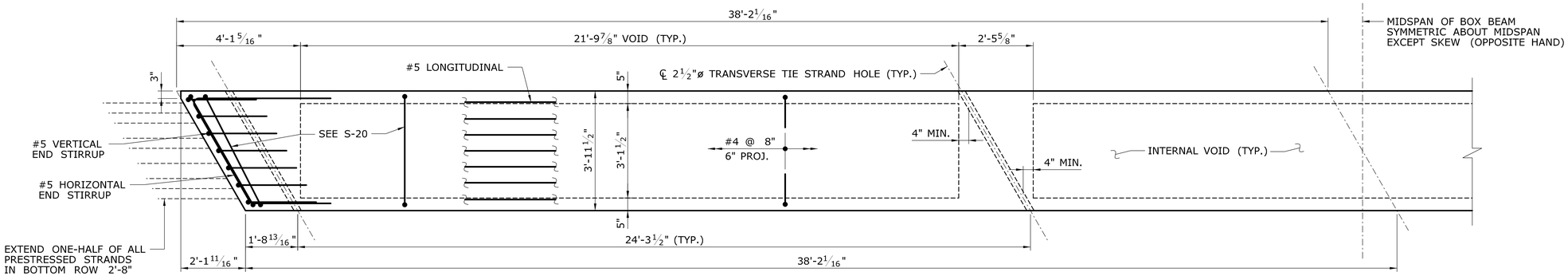

BI-48 PLAN

SCALE: 1/2" = 1'-0"

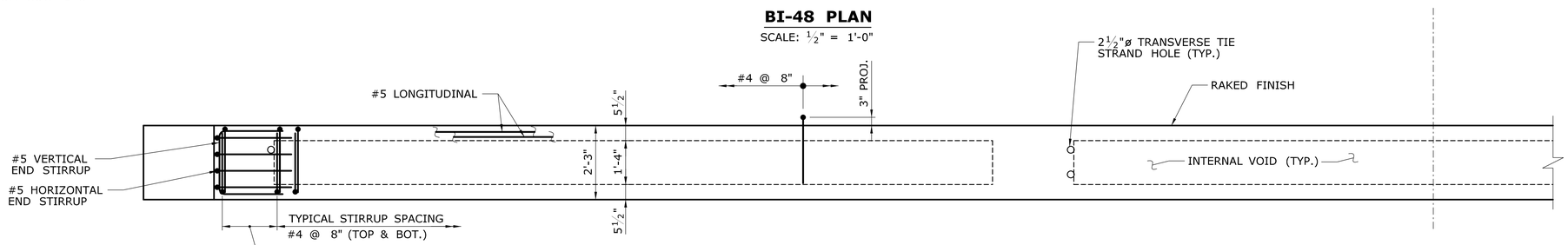

BI-48 ELEVATION

SCALE: 1/2" = 1'-0"

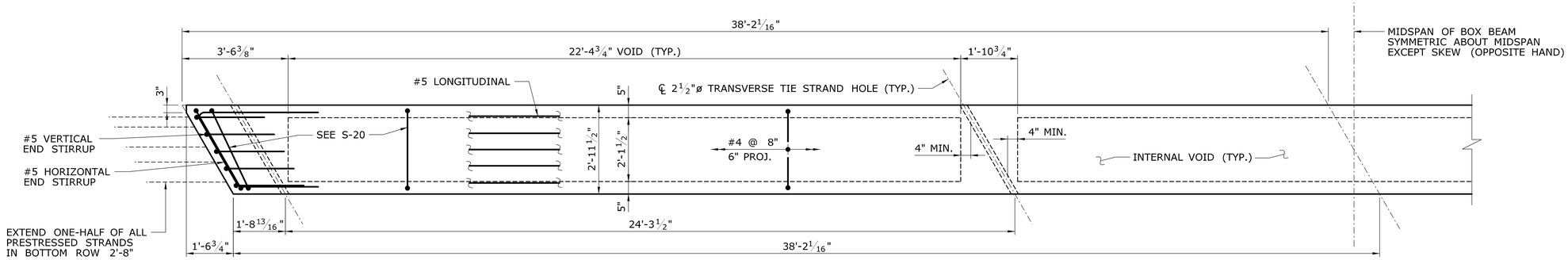

BI-36 PLAN

SCALE: 1/2" = 1'-0"

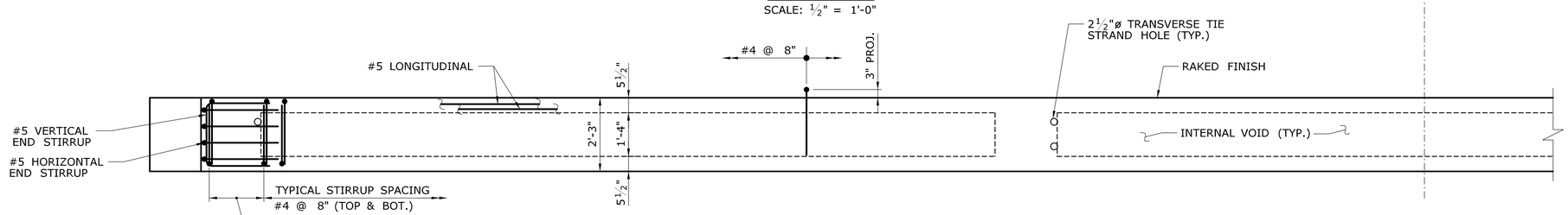

BI-36 ELEVATION

SCALE: 1/2" = 1'-0"

REV.	DATE	REVISION DESCRIPTION	SHEET NO.
-	-	-	-
-	-	-	-
-	-	-	-
-	-	-	-
-	-	-	-
-	-	-	-

THE INFORMATION, INCLUDING ESTIMATED QUANTITIES OF WORK, SHOWN ON THESE SHEETS IS BASED ON LIMITED INVESTIGATIONS BY THE STATE AND IS IN NO WAY WARRANTED TO INDICATE THE CONDITIONS OF ACTUAL QUANTITIES OF WORK WHICH WILL BE REQUIRED.

Plotted Date: 7/29/2015

DESIGNER/DRAFTER: JRA

CHECKED BY: AML

SCALE AS NOTED

STATE OF CONNECTICUT
DEPARTMENT OF TRANSPORTATION

Filename: ...\S-17 BEAM DETAILS - 1.dgn

SIGNATURE/BLOCK:

Stantec Consulting Services Inc.
55 Church Street
Suite 601
New Haven, CT 06510

PROJECT TITLE:

REPLACEMENT OF BRIDGE NO. 01018, ROUTE 53 OVER SAUGATUCK RIVER

TOWN: **REDDING**

DRAWING TITLE: **BEAM DETAILS - 1**

PROJECT NO. **116-133**

DRAWING NO. **S-17**

SHEET NO. **04.17**

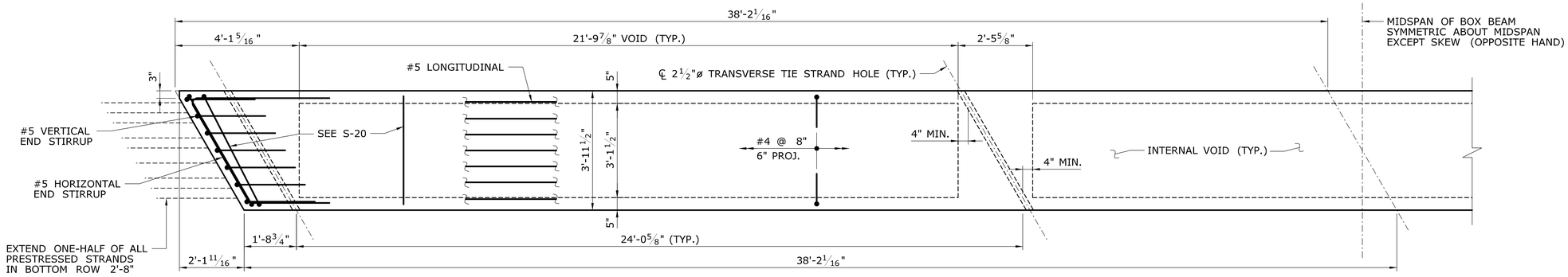

BI-48TF PLAN

SCALE: 1/2" = 1'-0"

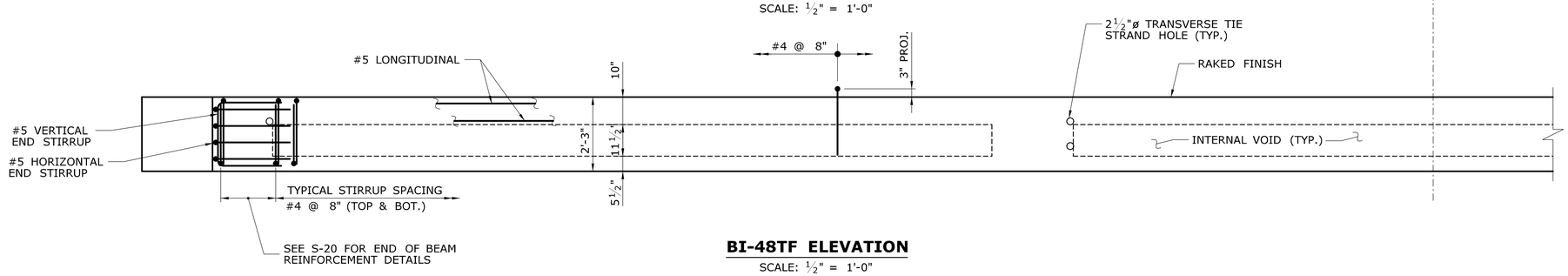

BI-48TF ELEVATION

SCALE: 1/2" = 1'-0"

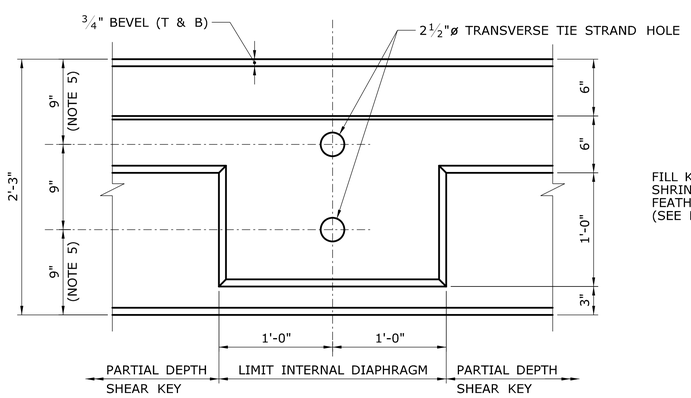

SHEAR KEY AT DIAPHRAGMS

SCALE: 1 1/2" = 1'-0"

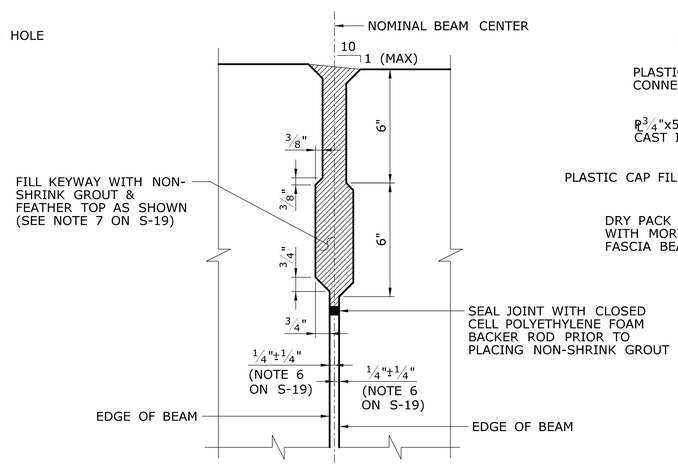

TYPICAL LONGITUDINAL JOINT

SCALE: 3" = 1'-0"

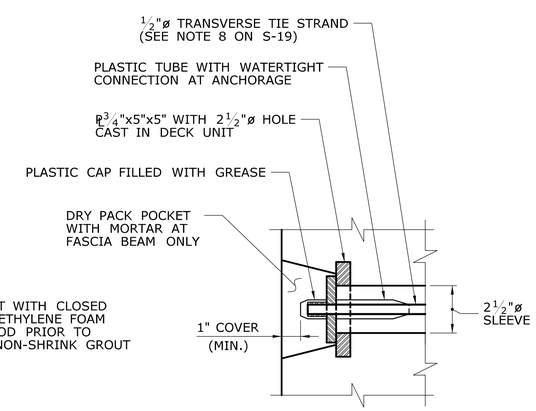

TRANSVERSE TIE POCKET DETAIL

SCALE: 3" = 1'-0"

TRANSVERSE STRAND POST-TENSIONING PROCEDURE:

1. AFTER ERECTING THE PRESTRESSED DECK UNITS FOR THE CONSTRUCTION STAGE, INSTALL THE TRANSVERSE TIES.
2. TENSION EACH TRANSVERSE TIE TO 5 KIPS.
3. SEAL THE BOTTOM OF THE LONGITUDINAL SHEAR KEYS WITH CLOSED CELL POLYETHYLENE FOAM BACKER ROD AND PLACE NON-SHRINK GROUT IN THE LONGITUDINAL SHEAR KEYS AND INTERNAL DIAPHRAGMS. THE GROUT SHALL BE RODDED OR VIBRATED TO ENSURE THAT ALL THE VOIDS IN THE SHEAR KEYS ARE FILLED.
4. WHEN THE GROUT HAS ATTAINED A COMPRESSIVE STRENGTH OF 1500 PSI, AT EACH TRANSVERSE TIE LOCATION TENSION THE BOTTOM TIE TO 15 KIPS, THEN THE TOP TIE TO 15 KIPS. REPEAT THIS TENSIONING SEQUENCE ONCE MORE SO THAT EACH TIE IS TENSIONED TO 30 KIPS.
5. NO DEAD LOADS OR LIVE LOADS, INCLUDING THE SHEAR SLAB, SHALL BE APPLIED TO THE BUTTED DECK UNITS UNTIL THE TRANSVERSE TIES HAVE BEEN FULLY TENSIONED AND THE GROUT IN THE LONGITUDINAL SHEAR KEYS HAS REACHED A SEVEN-DAY COMPRESSIVE STRENGTH OF 4500 PSI.

REV.	DATE	REVISION DESCRIPTION	SHEET NO.
-	-	-	-
-	-	-	-
-	-	-	-
-	-	-	-
-	-	-	-
-	-	-	-

THE INFORMATION, INCLUDING ESTIMATED QUANTITIES OF WORK, SHOWN ON THESE SHEETS IS BASED ON LIMITED INVESTIGATIONS BY THE STATE AND IS IN NO WAY WARRANTED TO INDICATE THE CONDITIONS OF ACTUAL QUANTITIES OF WORK WHICH WILL BE REQUIRED.

Plotted Date: 7/29/2015

DESIGNER/DRAFTER: JRA
CHECKED BY: AML
SCALE AS NOTED

STATE OF CONNECTICUT
DEPARTMENT OF TRANSPORTATION

Filename: ...\S-18 BEAM DETAILS - 2.dgn

SIGNATURE/BLOCK:

Stantec Consulting Services Inc.
55 Church Street
Suite 601
New Haven, CT 06510

PROJECT TITLE:
REPLACEMENT OF BRIDGE NO. 01018, ROUTE 53 OVER SAUGATUCK RIVER

TOWN: **REDDING**

DRAWING TITLE: **BEAM DETAILS - 2**

PROJECT NO. 116-133
DRAWING NO. S-18
SHEET NO. 04.18

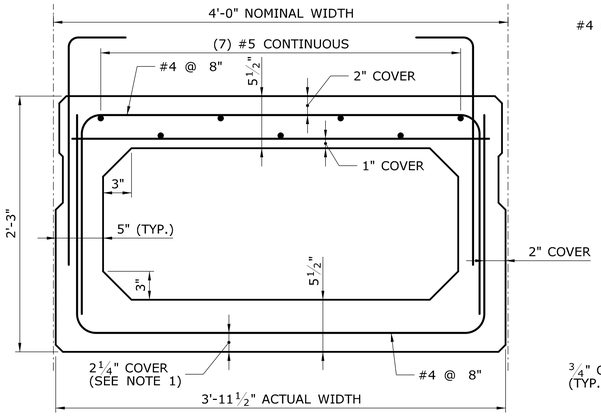

BI-48 SECTION AT VOID

SCALE: 1½" = 1'-0"

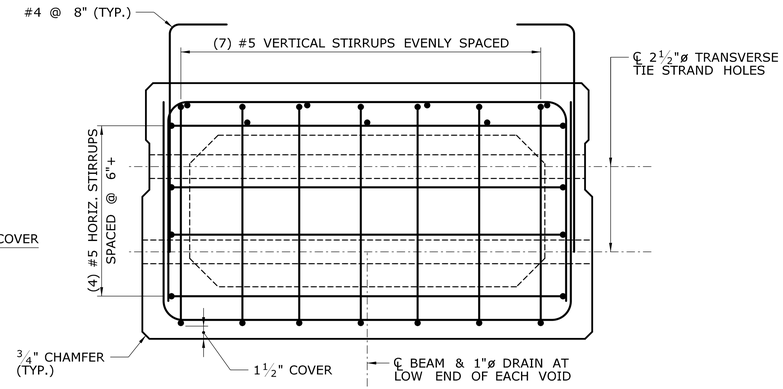

BI-48 SECTION AT END

SCALE: 1½" = 1'-0"

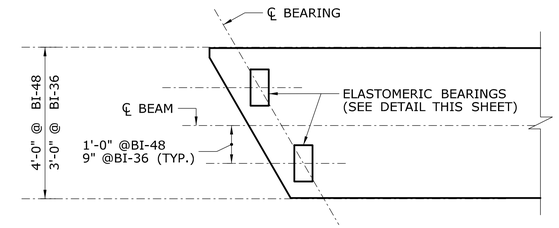

TYPICAL BEARING LAYOUT

SCALE: ½" = 1'-0"

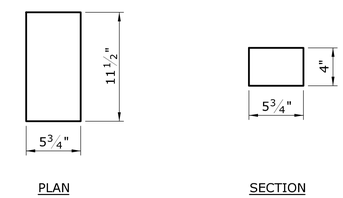

ELASTOMERIC BEARING PAD

SCALE: 1½" = 1'-0"

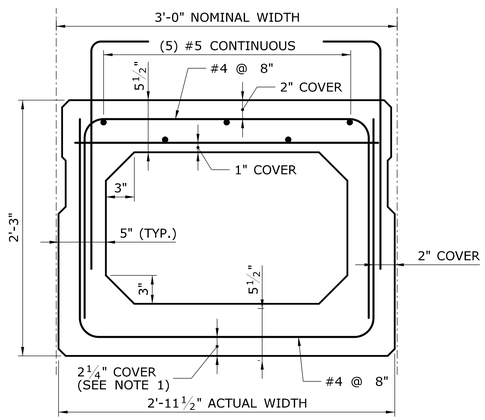

BI-36 SECTION AT VOID

SCALE: 1½" = 1'-0"

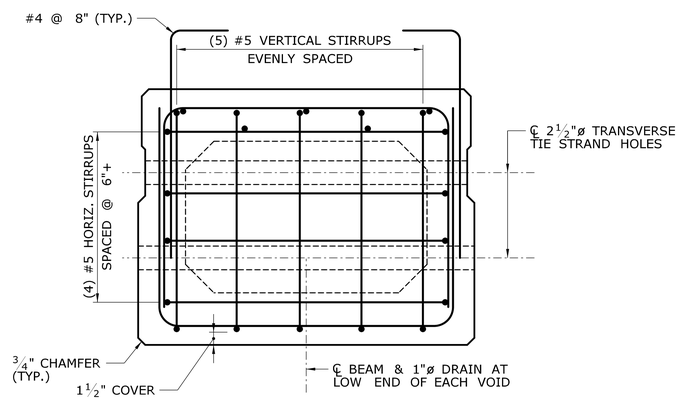

BI-36 SECTION AT END

SCALE: 1½" = 1'-0"

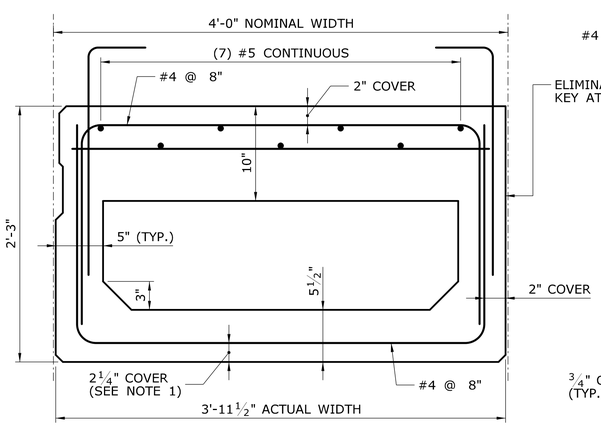

BI-48TF SECTION AT VOID

SCALE: 1½" = 1'-0"

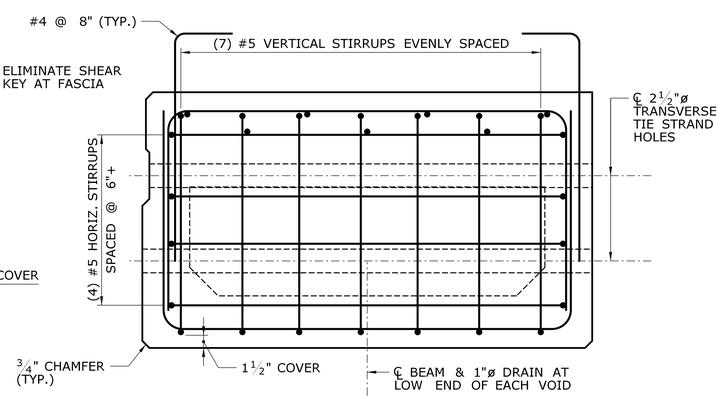

BI-48TF SECTION AT END

SCALE: 1½" = 1'-0"

BEAM NOTES:

1. 2¼" COVER SHOWN IS REQUIRED TO FACILITATE THE PLACEMENT OF THE BOTTOM PRESTRESSING STRANDS. THE FABRICATOR MAY MODIFY COVER TO A MINIMUM OF 1½" IF NO CONFLICTS EXIST WITH THE PRESTRESSING STRANDS.
2. SPLAY STIRRUPS TO AVOID CONFLICTS WITH TRANSVERSE TIE STRAND HOLES.
3. EXTEND LONGITUDINAL LEGS TO A MINIMUM DISTANCE EQUAL TO THE DEPTH OF THE BEAM OR 12" INTO THE WEB OF THE VOIDED SECTION, WHICHEVER IS LARGER.
4. HORIZONTAL LEGS OF THE VERTICAL STIRRUPS ARE EQUAL TO THE DEPTH OF THE BEAM.
5. THE VERTICAL LOCATION OF THE TRANSVERSE TIE STRANDS MUST BE COORDINATED WITH THE LOCATION OF THE PRESTRESSED STRAND AND ADJUSTED AS NECESSARY BY THE FABRICATOR.
6. THE DECK UNITS SHALL BE PLACED AT THE NOMINAL SPACING SHOWN ON THE PLAN WITH A GAP BETWEEN THE UNITS. THE WIDTH OF THE GAPS WILL VARY DUE THE SWEEP OF THE UNITS.
7. GROUT FOR SHEAR KEYS SHALL BE RODDED OR VIBRATED TO ENSURE THAT ALL VOIDS ARE IN THE SHEAR KEY ARE FILLED.
8. TRANSVERSE TIES SHALL BE COVERED BY A SEAMLESS POLYPROPYLENE SHEATH, WITH CORROSION INHIBITING GREASE BETWEEN THE STRAND AND SHEATH, FOR THE FULL LENGTH OF THE STRAND EXCEPT AT THE ANCHORAGE LOCATION.
9. OTHER TRANSVERSE ANCHORAGE SYSTEMS MAY BE SUBSTITUTED WITH THE APPROVAL OF THE ENGINEER. ALTERNATE ANCHORAGE SYSTEMS SHALL BE WATERTIGHT AND CORROSION PROOF.
10. THE DRILLING OF HOLES IN (OR THE USE OF POWER ACTUATED TOOLS ON) PRESTRESSED MEMBERS WILL NOT BE PERMITTED.

REV.	DATE	REVISION DESCRIPTION	SHEET NO.
-	-	-	-
-	-	-	-
-	-	-	-
-	-	-	-
-	-	-	-
-	-	-	-

THE INFORMATION, INCLUDING ESTIMATED QUANTITIES OF WORK, SHOWN ON THESE SHEETS IS BASED ON LIMITED INVESTIGATIONS BY THE STATE AND IS IN NO WAY WARRANTED TO INDICATE THE CONDITIONS OF ACTUAL QUANTITIES OF WORK WHICH WILL BE REQUIRED.

Plotted Date: 7/29/2015

DESIGNER/DRAFTER: JRA

CHECKED BY: AML

SCALE AS NOTED

STATE OF CONNECTICUT
DEPARTMENT OF TRANSPORTATION

Filename: ...\S-19 BEAM DETAILS - 3.dgn

SIGNATURE/BLOCK:

Stantec Consulting Services Inc.
55 Church Street
Suite 601
New Haven, CT 06510

PROJECT TITLE:

REPLACEMENT OF BRIDGE NO. 01018, ROUTE 53 OVER SAUGATUCK RIVER

TOWN: **REDDING**

DRAWING TITLE: **BEAM DETAILS - 3**

PROJECT NO. **116-133**

DRAWING NO. **S-19**

SHEET NO. **04.19**

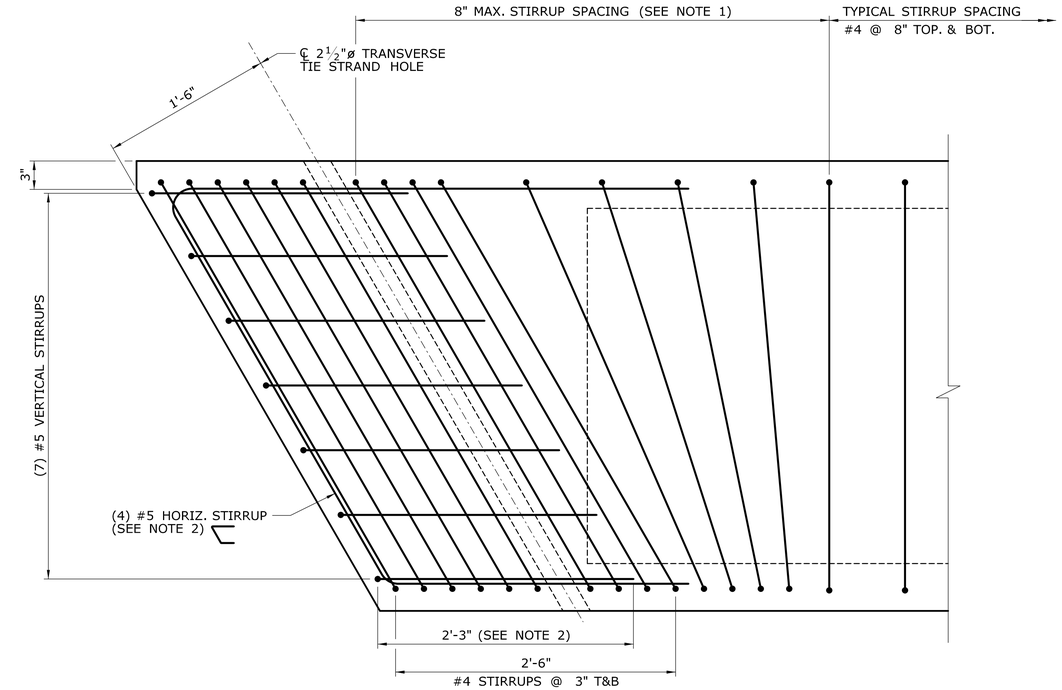

BI-48TF PLAN AT END

SCALE: 1½" = 1'-0"

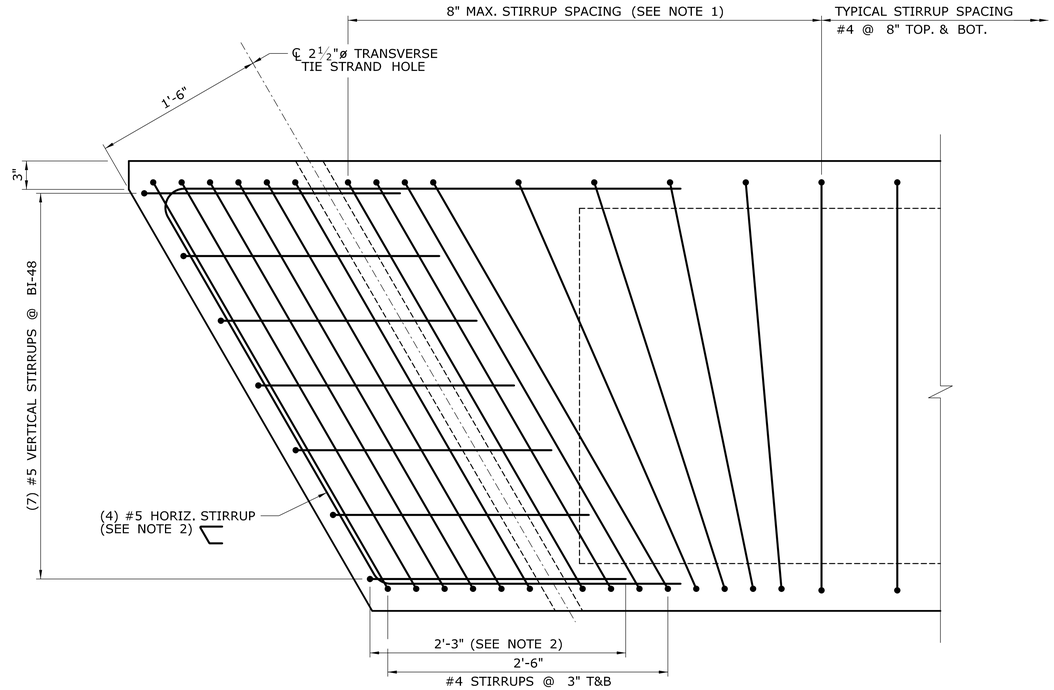

BI-48 PLAN AT END

SCALE: 1½" = 1'-0"

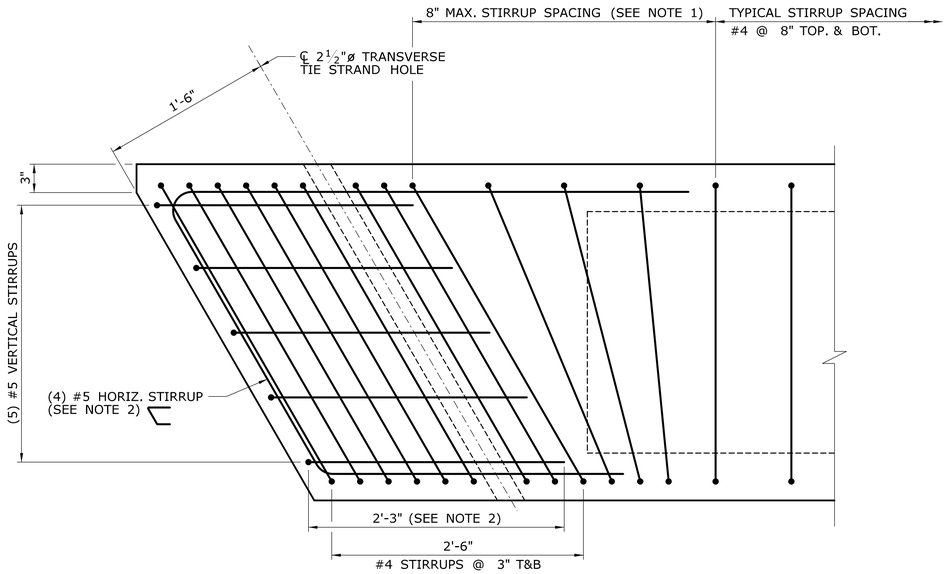

BI-36 PLAN AT END

SCALE: 1½" = 1'-0"

BEAM NOTES:

1. SPLAY STIRRUPS TO AVOID CONFLICTS WITH TRANSVERSE TIE STRAND HOLES.
2. HORIZONTAL LEGS OF THE VERTICAL STIRRUPS ARE EQUAL TO THE DEPTH OF THE BEAM.

REV.	DATE	REVISION DESCRIPTION	SHEET NO.
-	-	-	-
-	-	-	-
-	-	-	-
-	-	-	-
-	-	-	-
-	-	-	-
-	-	-	-

THE INFORMATION, INCLUDING ESTIMATED QUANTITIES OF WORK, SHOWN ON THESE SHEETS IS BASED ON LIMITED INVESTIGATIONS BY THE STATE AND IS IN NO WAY WARRANTED TO INDICATE THE CONDITIONS OF ACTUAL QUANTITIES OF WORK WHICH WILL BE REQUIRED.

Plotted Date: 7/29/2015

DESIGNER/DRAFTER: JRA

CHECKED BY: AML

SCALE AS NOTED

STATE OF CONNECTICUT
DEPARTMENT OF TRANSPORTATION

Filename: ...\S-20 BEAM DETAILS - 4.dgn

SIGNATURE/BLOCK:

Stantec Consulting Services Inc.
55 Church Street
Suite 601
New Haven, CT 06510

PROJECT TITLE:
REPLACEMENT OF BRIDGE NO. 01018, ROUTE 53 OVER SAUGATUCK RIVER

TOWN: **REDDING**

DRAWING TITLE: **BEAM DETAILS - 4**

PROJECT NO. **116-133**

DRAWING NO. **S-20**

SHEET NO. **04.20**

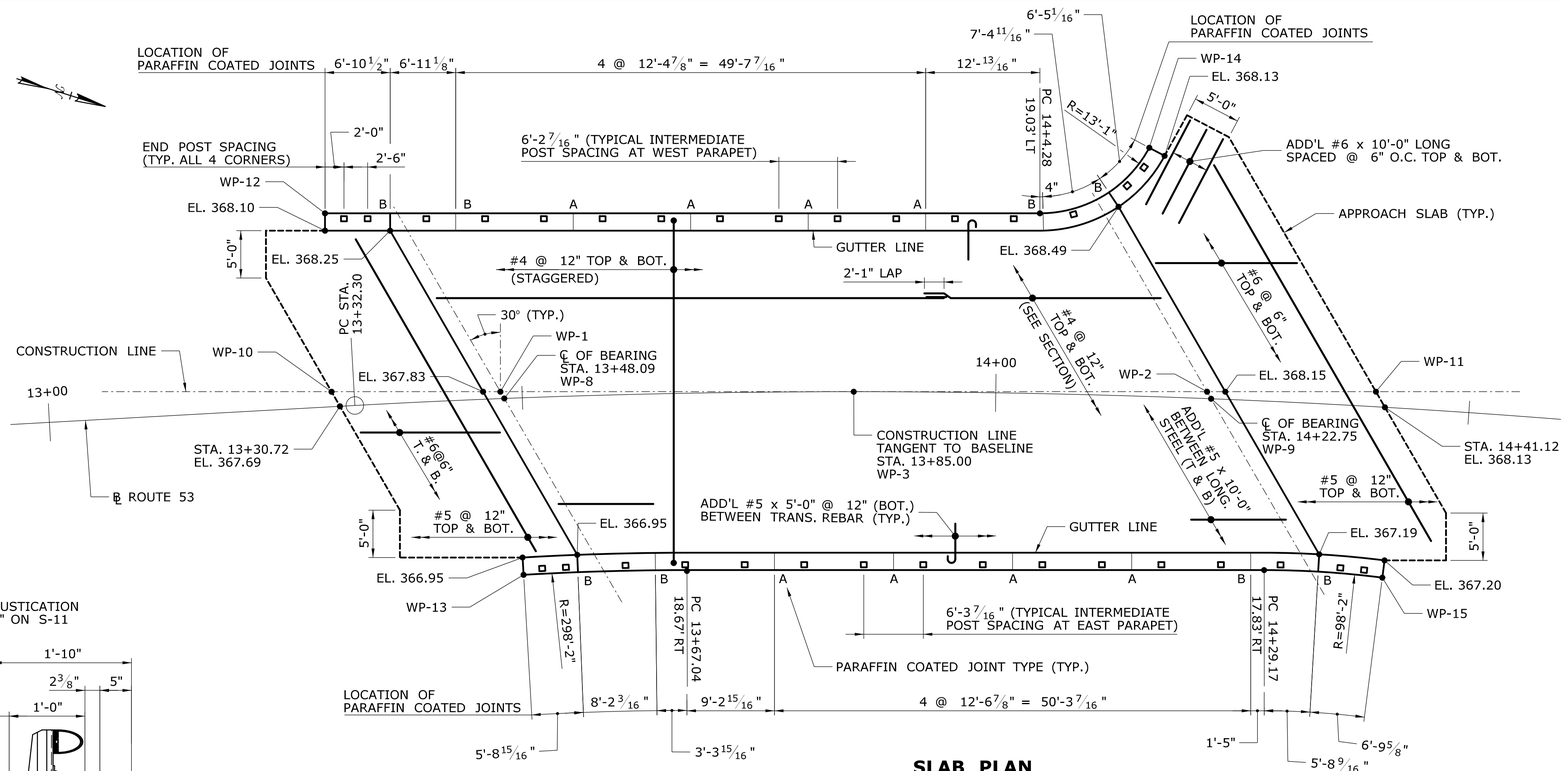

SLAB PLAN

SCALE: 1/8" = 1'-0"

SLAB NOTES:

1. ELEVATIONS INDICATED ON "SLAB PLAN" ARE TO FINISHED GRADE.

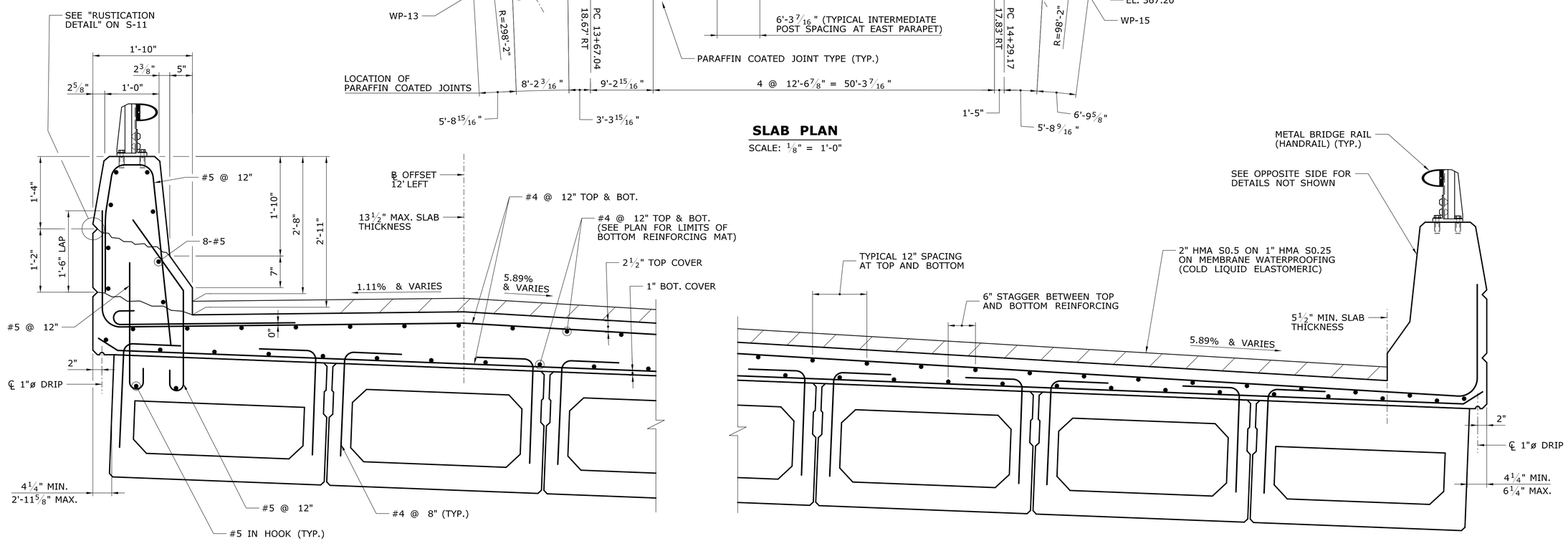

TYPICAL SLAB SECTION

SCALE: 1" = 1'-0"

REV.	DATE	REVISION DESCRIPTION	SHEET NO.
-	-	-	-
-	-	-	-
-	-	-	-
-	-	-	-
-	-	-	-
-	-	-	-

THE INFORMATION, INCLUDING ESTIMATED QUANTITIES OF WORK, SHOWN ON THESE SHEETS IS BASED ON LIMITED INVESTIGATIONS BY THE STATE AND IS IN NO WAY WARRANTED TO INDICATE THE CONDITIONS OF ACTUAL QUANTITIES OF WORK WHICH WILL BE REQUIRED.

Plotted Date: 7/29/2015

DESIGNER/DRAFTER: JRA
CHECKED BY: AML
SCALE AS NOTED

STATE OF CONNECTICUT
DEPARTMENT OF TRANSPORTATION

Filename: ...\S-21 SLAB PLAN.dgn

SIGNATURE/BLOCK:

Stantec Consulting Services Inc.
55 Church Street
Suite 601
New Haven, CT 06510

PROJECT TITLE:
REPLACEMENT OF BRIDGE NO. 01018, ROUTE 53 OVER SAUGATUCK RIVER

TOWN: REDDING

DRAWING TITLE: SLAB PLAN

PROJECT NO. 116-133
DRAWING NO. S-21
SHEET NO. 04.21

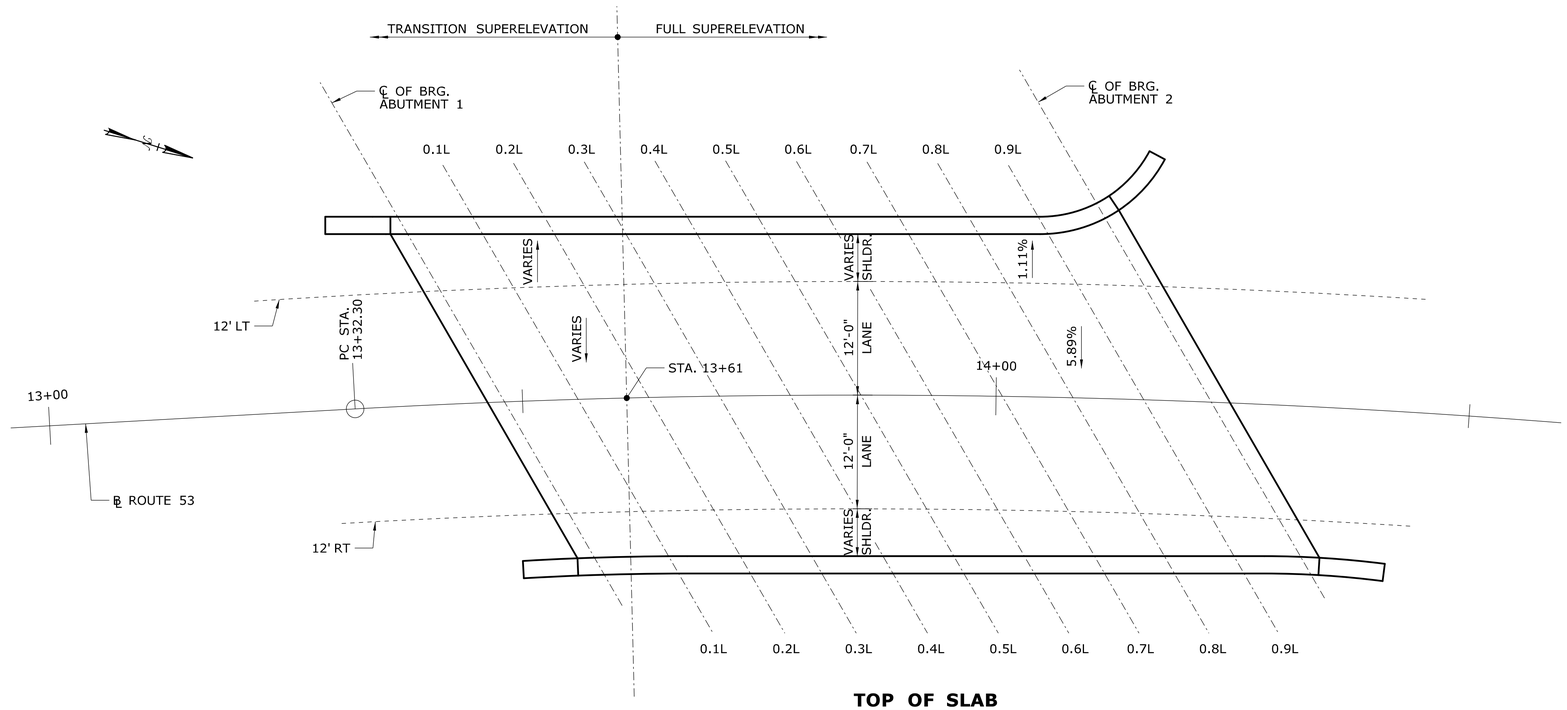

TOP OF SLAB

SCALE: 1/8" = 1'-0"

TOP OF SLAB ELEVATIONS

	ABUTMENT 1		0.1L		0.2L		0.3L		0.4L		0.5L		0.6L		0.7L		0.8L		0.9L		ABUTMENT 2	
OFFSET	STATION	ELEVATION	STATION	ELEVATION	STATION	ELEVATION	STATION	ELEVATION	STATION	ELEVATION	STATION	ELEVATION	STATION	ELEVATION	STATION	ELEVATION	STATION	ELEVATION	STATION	ELEVATION	STATION	ELEVATION
12' LT	13+41.86	368.16	13+49.21	368.25	13+56.55	368.34	13+63.90	368.41	13+71.24	368.46	13+78.59	368.49	13+85.93	368.53	13+93.27	368.55	14+00.61	368.57	14+07.95	368.59	14+15.29	368.60
0	13+48.09	367.60	13+55.56	367.65	13+63.02	367.70	13+70.49	367.75	13+77.95	367.78	13+85.42	367.82	13+92.88	367.84	14+00.35	367.87	14+07.82	367.88	14+15.28	367.89	14+22.75	367.90
12' RT	13+54.51	366.97	13+62.10	366.99	13+69.69	367.03	13+77.28	367.07	13+84.87	367.11	13+92.46	367.14	14+00.06	367.16	14+07.65	367.17	14+15.25	367.18	14+22.84	367.19	14+30.44	367.19

REV.	DATE	REVISION DESCRIPTION	SHEET NO.
-	-	-	-
-	-	-	-
-	-	-	-
-	-	-	-
-	-	-	-
-	-	-	-

THE INFORMATION, INCLUDING ESTIMATED QUANTITIES OF WORK, SHOWN ON THESE SHEETS IS BASED ON LIMITED INVESTIGATIONS BY THE STATE AND IS IN NO WAY WARRANTED TO INDICATE THE CONDITIONS OF ACTUAL QUANTITIES OF WORK WHICH WILL BE REQUIRED.

Plotted Date: 7/29/2015

DESIGNER/DRAFTER: **JRA**

CHECKED BY: **AML**

SCALE AS NOTED

STATE OF CONNECTICUT
DEPARTMENT OF TRANSPORTATION

Filename: ...\S-22 SLAB DETAILS - 1.dgn

SIGNATURE/ BLOCK:

Stantec Consulting Services Inc.
55 Church Street
Suite 601
New Haven, CT 06510

PROJECT TITLE:

REPLACEMENT OF BRIDGE NO. 01018, ROUTE 53 OVER SAUGATUCK RIVER

TOWN: **REDDING**

DRAWING TITLE: **SLAB DETAILS - 1**

PROJECT NO. **116-133**

DRAWING NO. **S-22**

SHEET NO. **04.22**

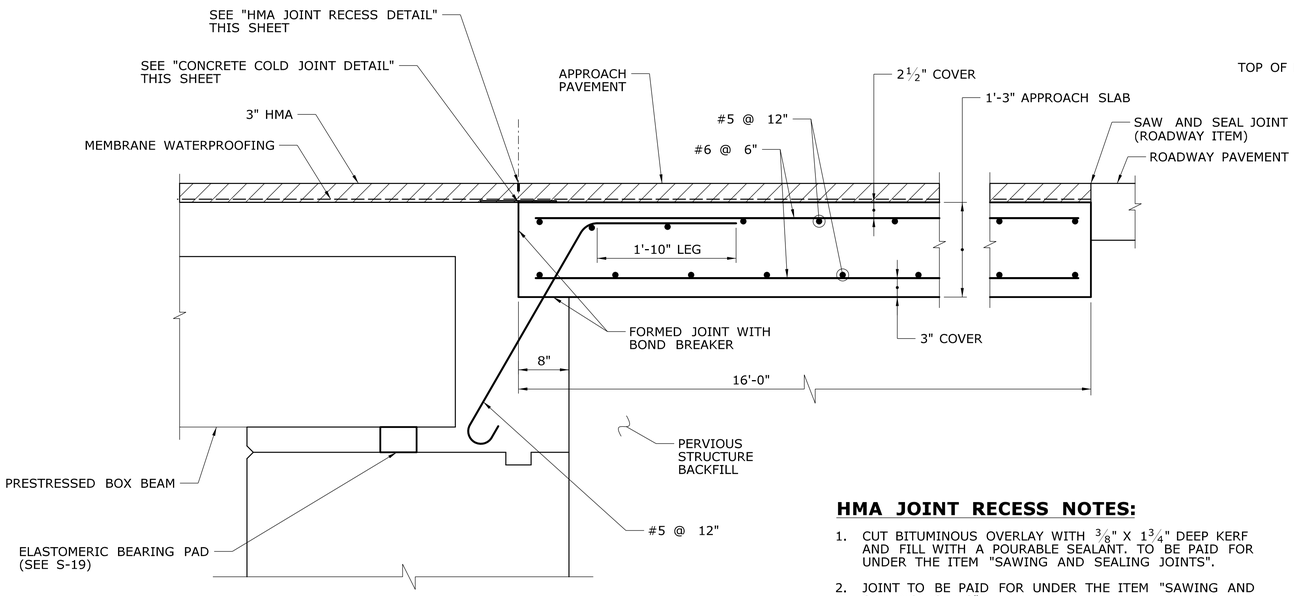

APPROACH SLAB SECTION

SCALE: 1" = 1'-0"

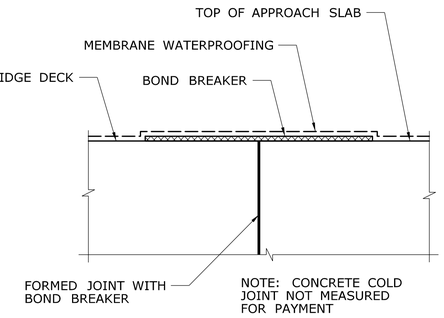

CONCRETE COLD JOINT DETAIL

SCALE: 3" = 1'-0"

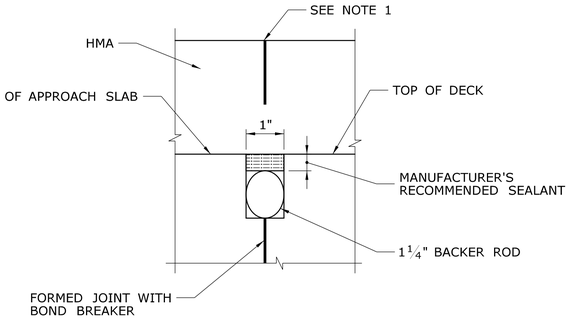

HMA JOINT RECESS DETAIL

SCALE: 6" = 1'-0"

HMA JOINT RECESS NOTES:

1. CUT BITUMINOUS OVERLAY WITH ⅜" X 1¾" DEEP KERF AND FILL WITH A POURABLE SEALANT. TO BE PAID FOR UNDER THE ITEM "SAWING AND SEALING JOINTS".
2. JOINT TO BE PAID FOR UNDER THE ITEM "SAWING AND SEALING JOINTS".

DECK POURING SEQUENCE:

NOTE: WORK THIS SEQUENCE WITH SEQUENCE INDICATED ON SHEET S-14.

1. PLACE BULKHEAD AT FACE OF ABUTMENT AT ABUTMENT 1.
2. BEGIN POUR AT ABUTMENT 1 BULKHEAD AND PROCEED TO ABUTMENT 2. THE INTEGRAL ABUTMENT POUR AT ABUTMENT 2 SHALL BE A CONTINUATION OF THE DECK PLACEMENT.
3. AFTER A MINIMUM OF 24 HOURS, REMOVE BULKHEAD AND PROCEED WITH NEXT POUR AT INTEGRAL ABUTMENT 1.

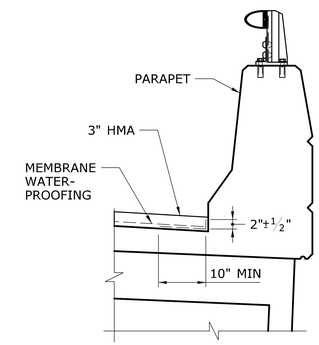

MEMBRANE WATERPROOFING AT GUTTERLINE

SCALE: ¾" = 1'-0"

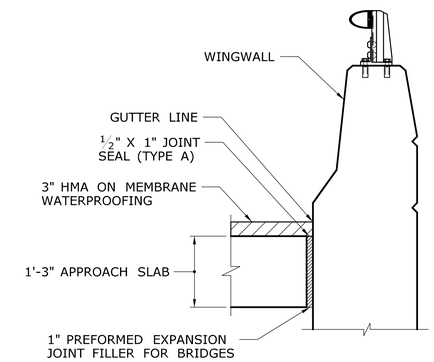

APPROACH SLAB AT GUTTERLINE

SCALE: ¾" = 1'-0"

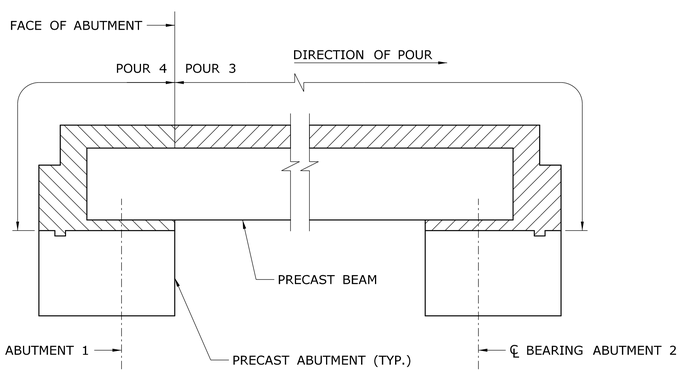

DECK POURING SEQUENCE - SECTION

NOT TO SCALE

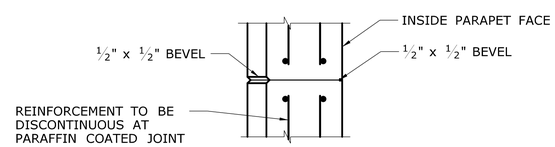

SECTION A-A

SCALE: 1" = 1'-0"

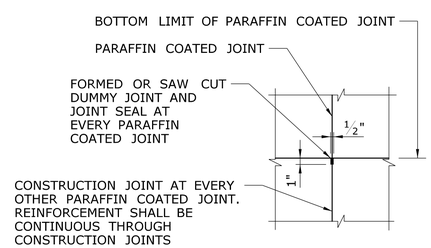

SECTION B-B

SCALE: 1" = 1'-0"

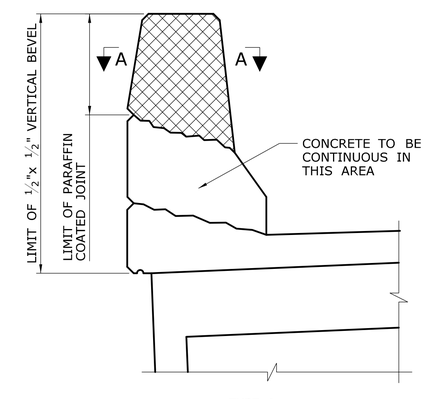

TYPE A

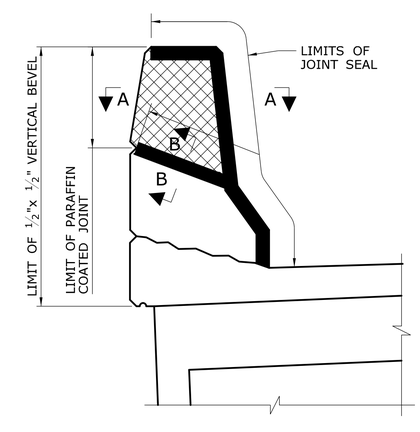

TYPE B

PARAFFIN COATED AREA

PARAFFIN COATED JOINT DETAILS

SCALE: 1" = 1'-0"

REV.	DATE	REVISION DESCRIPTION	SHEET NO.
-	-	-	-
-	-	-	-
-	-	-	-
-	-	-	-
-	-	-	-
-	-	-	-

THE INFORMATION, INCLUDING ESTIMATED QUANTITIES OF WORK, SHOWN ON THESE SHEETS IS BASED ON LIMITED INVESTIGATIONS BY THE STATE AND IS IN NO WAY WARRANTED TO INDICATE THE CONDITIONS OF ACTUAL QUANTITIES OF WORK WHICH WILL BE REQUIRED.

Plotted Date: 7/29/2015

DESIGNER/DRAFTER: JRA
CHECKED BY: AML
SCALE AS NOTED

STATE OF CONNECTICUT
DEPARTMENT OF TRANSPORTATION

Filename: ...\S-23 SLAB DETAILS - 2.dgn

SIGNATURE/BLOCK:

Stantec Consulting Services Inc.
55 Church Street
Suite 601
New Haven, CT 06510

PROJECT TITLE:
REPLACEMENT OF BRIDGE NO. 01018, ROUTE 53 OVER SAUGATUCK RIVER

TOWN: REDDING

DRAWING TITLE: SLAB DETAILS - 2

PROJECT NO. 116-133
DRAWING NO. S-23
SHEET NO. 04.23

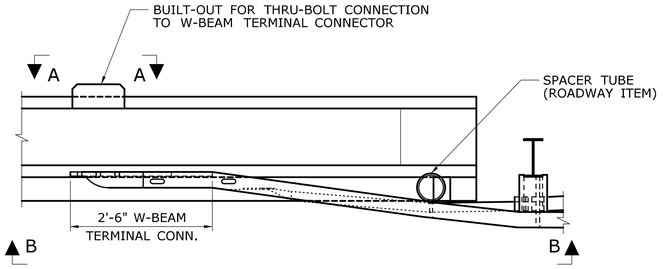

ATTACHMENT PLAN

SCALE: 3/4" = 1'-0"

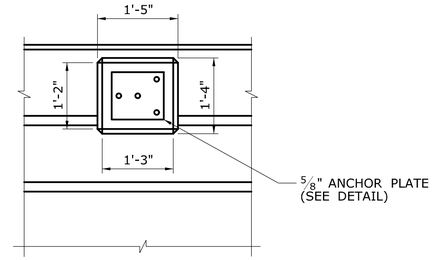

ELEVATION A-A

SCALE: 3/4" = 1'-0"

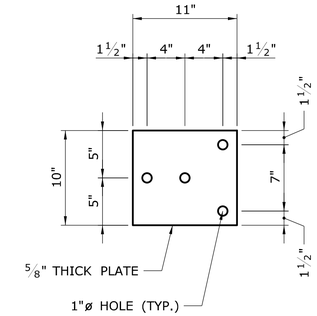

ANCHOR PLATE DETAIL

SCALE: 1 1/2" = 1'-0"

METAL BEAM RAIL NOTES

1. STEEL PLATES SHALL CONFORM TO THE REQUIREMENTS OF ASTM A36 AND BE HOT-DIP GALVANIZED IN ACCORDANCE WITH ASTM A123.
2. ANCHOR BOLTS SHALL CONFORM TO THE REQUIREMENTS OF ASTM A325, MECHANICALLY GALVANIZED.
3. 1"ø PIPE SHALL CONFORM TO THE REQUIREMENTS OF ASTM A53 GRADE B OR ASTM A501 AND SHALL BE GALVANIZED IN ACCORDANCE WITH ASTM A123.
4. ROADWAY ELEMENTS SHALL BE PAID FOR UNDER THE APPLICABLE ROADWAY ITEMS.
5. ALL RAIL ANCHORAGE MATERIAL REQUIRED FOR END ATTACHMENTS SHALL BE PAID FOR UNDER THE APPLICABLE ROADWAY ITEMS.
6. METAL BRIDGE RAIL (HANDRAIL) NOT SHOWN ON DETAILS ON THIS SHEET.

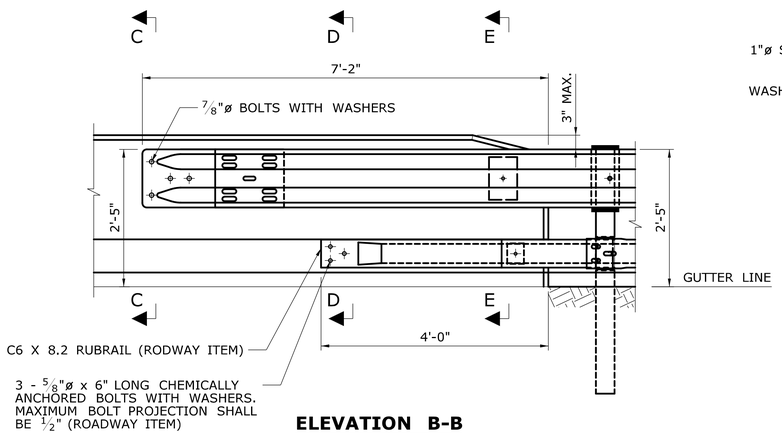

ELEVATION B-B

SCALE: 3/4" = 1'-0"

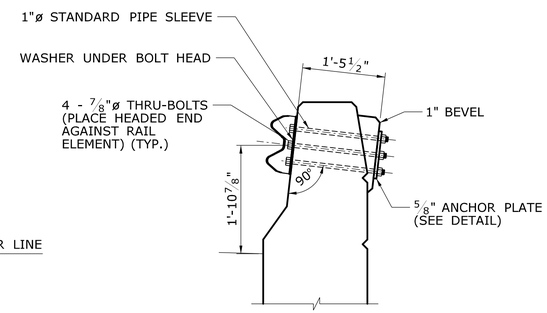

SECTION C-C

SCALE: 3/4" = 1'-0"

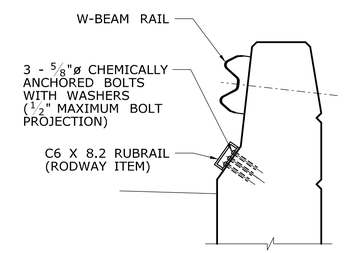

SECTION D-D

SCALE: 3/4" = 1'-0"

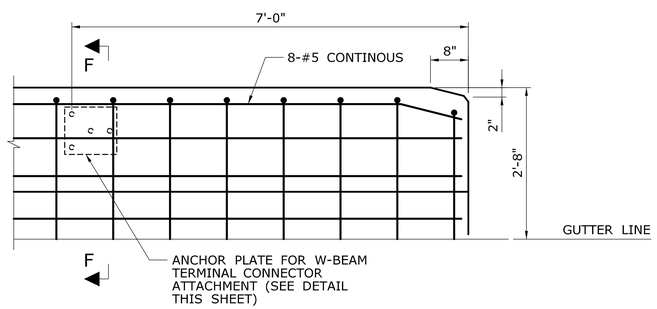

PARAPET REINFORCING AT ENDS

SCALE: 3/4" = 1'-0"

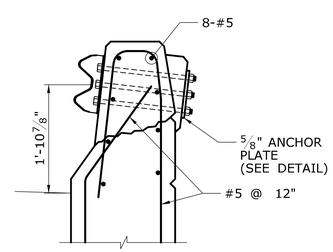

SECTION F-F

SCALE: 3/4" = 1'-0"

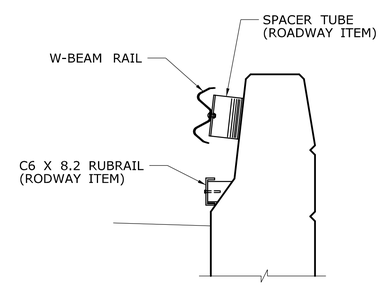

SECTION E-E

SCALE: 3/4" = 1'-0"

REV.	DATE	REVISION DESCRIPTION	SHEET NO.

THE INFORMATION, INCLUDING ESTIMATED QUANTITIES OF WORK, SHOWN ON THESE SHEETS IS BASED ON LIMITED INVESTIGATIONS BY THE STATE AND IS IN NO WAY WARRANTED TO INDICATE THE CONDITIONS OF ACTUAL QUANTITIES OF WORK WHICH WILL BE REQUIRED.

Plotted Date: 7/29/2015

DESIGNER/DRAFTER: JRA

CHECKED BY: AML

SCALE AS NOTED

STATE OF CONNECTICUT
DEPARTMENT OF TRANSPORTATION

Filename: ...\S-24 RAILING ATTACHMENT DETAILS.dgn

SIGNATURE/BLOCK:

Stantec Consulting Services Inc.
55 Church Street
Suite 601
New Haven, CT 06510

PROJECT TITLE:
REPLACEMENT OF BRIDGE NO. 01018, ROUTE 53 OVER SAUGATUCK RIVER

TOWN: REDDING

DRAWING TITLE: RAILING ATTACHMENT DETAILS

PROJECT NO. 116-133

DRAWING NO. S-24

SHEET NO. 04.24

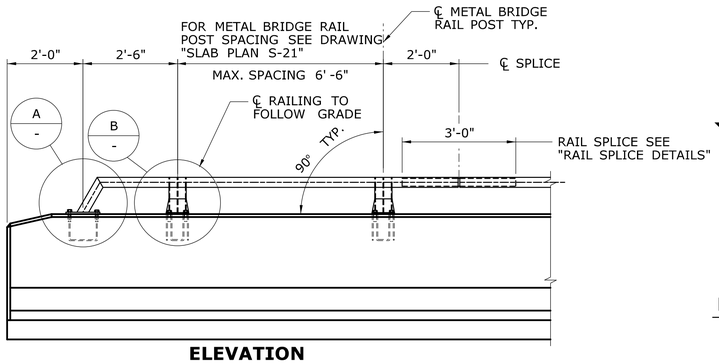

ELEVATION

SCALE: 1/2" = 1'-0"

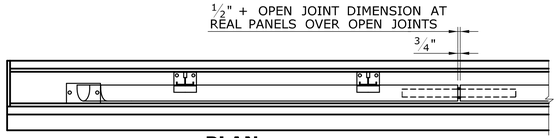

PLAN

SCALE: 3/4" = 1'-0"

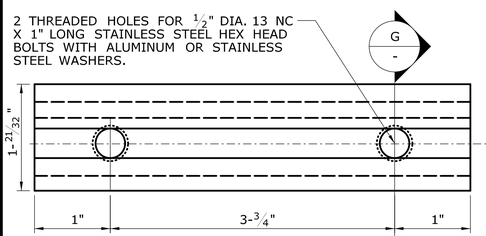

POST CONNECTION DEVICE DETAILS

N.T.S.

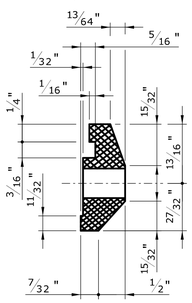

SECTION G

N.T.S.

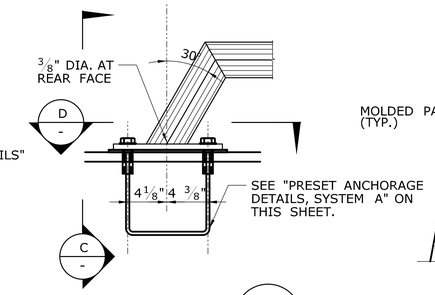

DETAIL-END RAIL A

SCALE: 1 1/2" = 1'-0"

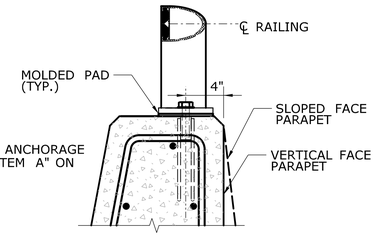

DETAIL-END RAIL C

SCALE: 1 1/2" = 1'-0"

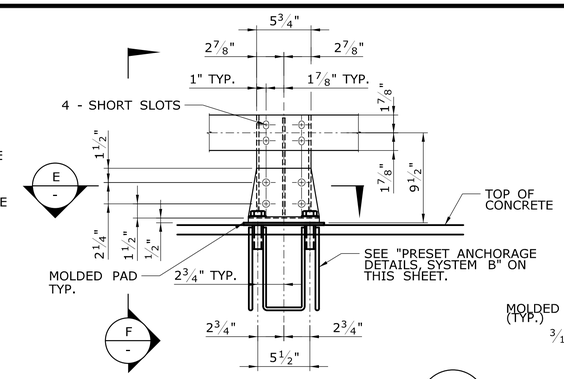

DETAIL-INTERIOR POST B

SCALE: 1 1/2" = 1'-0"

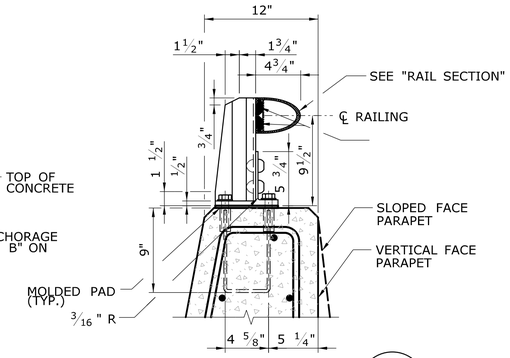

DETAIL-INTERIOR POST F

SCALE: 1 1/2" = 1'-0"

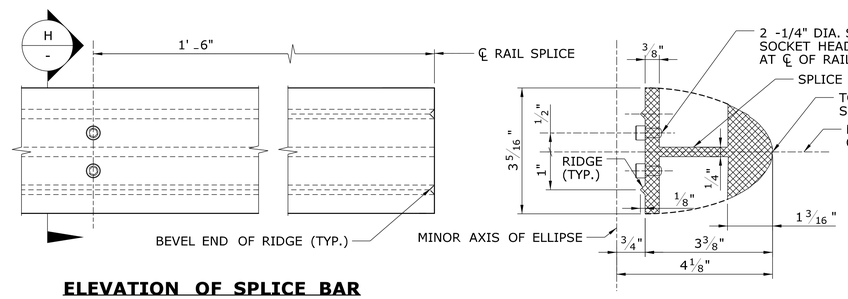

ELEVATION OF SPLICE BAR

SECTION H

RAIL SPLICE DETAILS

SCALE: 6" = 1'-0"

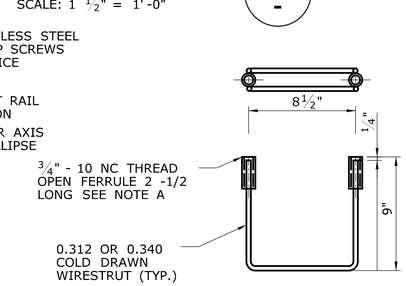

SYSTEM "A"

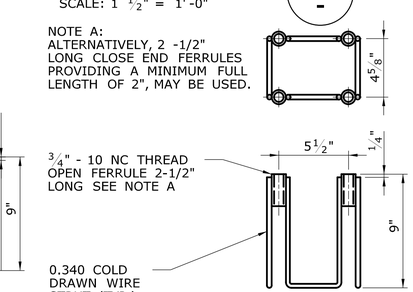

SYSTEM "B"

PRESET ANCHORAGE DETAILS

N.T.S.

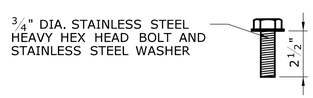

BOLT FOR PRESET ANCHORAGE

SCALE: 3" = 1'-0"

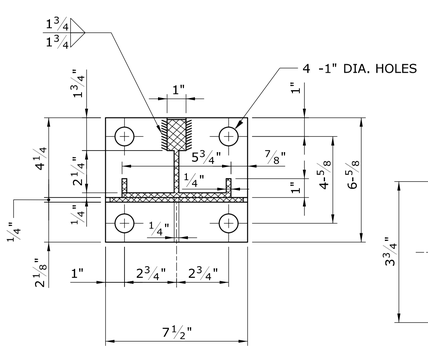

SECTION E

SCALE: 3" = 1'-0"

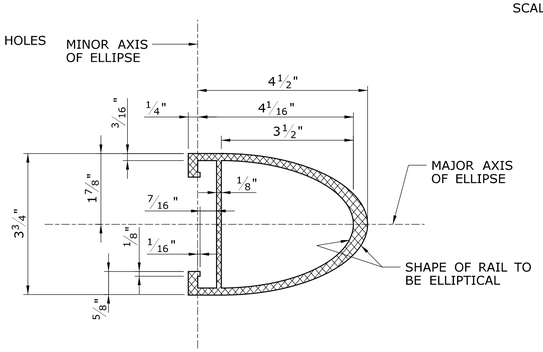

RAIL SECTION

SCALE: 6" = 1'-0"

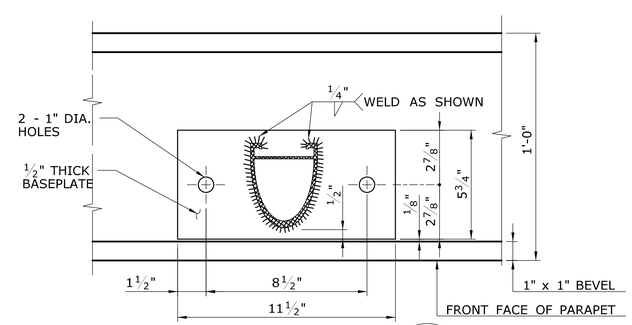

SECTION-END RAIL D

SCALE: 3" = 1'-0"

NOTES:

1. ALUMINUM WELDING SHALL BE IN ACCORDANCE WITH THE AMERICAN WELDING SOCIETY "STRUCTURAL WELDING CODE-ALUMINUM", ANSI/AWS D1.2.
2. RIVETING SHALL BE DONE IN ACCORDANCE WITH ARTICLE 6.5 - RIVETING OF THE AASHTO SPECIFICATIONS FOR ALUMINUM STRUCTURES".
3. METAL BRIDGE RAIL: THE RAILING POSTS, POST CONNECTION DEVICES, SPLICE BARS AND RAILS SHALL BE EXTRUDED ALUMINUM AND CONFORM TO THE REQUIREMENTS OF ASTM B221, ALUMINUM ALLOY 6061-T6 OR 6005-T6.
4. SOCKET HEAD CAP SCREWS SHALL BE STAINLESS STEEL AND CONFORM TO THE REQUIREMENTS OF ASTM F837, GROUP 1 (ANSI TYPE 304).
5. ALL BOLTS SHALL BE STAINLESS STEEL AND CONFORM TO THE REQUIREMENTS OF ASTM F593, GROUP 1, (ANSI TYPE 304). NUTS SHALL BE STAINLESS STEEL AND CONFORM TO THE REQUIREMENTS OF ASTM F594, GROUP 1. WASHERS SHALL BE STAINLESS AND CONFORM TO THE REQUIREMENTS OF ASTM A167, TYPE 302 THROUGH 305.
6. CONE POINT RIVETS SHALL CONFORM TO ASTM B316, ALUMINUM ALLOY 6061-T6 OR ASTM B221, ALUMINUM ALLOY 6061-T-6.
7. LENGTHS OF RAIL ELEMENTS SHALL BE CONTINUOUS OVER FOUR RAIL POSTS WHEREVER POSSIBLE BUT IN NO CASE LESS THAN TWO. WELDING OF TWO OR MORE RAILS TO FORM AN ELEMENT WILL NOT BE ALLOWED. RAIL SPLICES SHALL BE LOCATED IN RAIL PANELS OVER OPEN JOINTS IN PARAPETS. SPLICE BARS SHALL HAVE A SLIDING FIT IN THE RAIL SECTIONS.
8. ALUMINUM RAILINGS SHALL BE CAREFULLY ADJUSTED PRIOR TO FIXING IN PLACE TO INSURE PROPER MATCHING AT ABUTTING JOINTS AND CORRECT ALIGNMENT AND CURVATURE THROUGHOUT THEIR LENGTH. AFTER INSTALLATION, ALL RAILS AND POSTS SHALL BE FREE OF BURRS, SHARP EDGES AND IRREGULARITIES.
9. PRESET AHCHORAGES: THE WIRE STRUTS SHALL BE COLD-DRAWN AND CONFORM TO ASTM A510, GRADE 1030. THE FERRULES SHALL CONFORM TO ASTM A108, GRADE 12L14. AFTER FABRICATION, THE PRESET ANCHORAGES SHALL BE HOT-DIP GALVANIZED IN ACCORDANCE WITH ASTM A153. THE BOLTS SHALL BE "FREE RUNNING" IN THE FERRULES AFTER GALVANIZATION.
10. THE ANCHORAGE ASSEMBLIES SHALL BE INSTALLED PERPENDICULAR TO THE GRADE OF THE BRIDGE DECK. THE ANCHORAGES SHALL BE FIRMLY AND ACCURATELY HELD IN POSITION PRIOR TO AND DURING THE PLACING OF CONCRETE.
11. MOLDED PADS: MOLDED PADS SHALL BE MANUFACTURED FROM NEW UNVULCANIZED ELASTOMER AND UNUSED SYNTHETIC FIBERS, WITH A WEIGHT PROPORTION OF FIBER CONTENT EQUAL TO APPROXIMATELY ONE-HALF OF THE TOTAL WEIGHT OF THE PAD.
12. ANODIZING: ALL RAILING COMPONENTS SHALL BE ANODIZED ACCORDING TO ASTM B580, COATING TYPE - A ENGINEERING HARDCOAT. FOR ANODIZED RAILING, ALUMINUM ALLOY 6005-T6 SHALL BE USED. THE COLOR IS TO BE BLACK.

REV.	DATE	REVISION DESCRIPTION	SHEET NO.

THE INFORMATION, INCLUDING ESTIMATED QUANTITIES OF WORK, SHOWN ON THESE SHEETS IS BASED ON LIMITED INVESTIGATIONS BY THE STATE AND IS IN NO WAY WARRANTED TO INDICATE THE CONDITIONS OF ACTUAL QUANTITIES OF WORK WHICH WILL BE REQUIRED.

Plotted Date: 7/29/2015

DESIGNER/DRAFTER: JRA
CHECKED BY: AML
SCALE AS NOTED

STATE OF CONNECTICUT
DEPARTMENT OF TRANSPORTATION

Filename: ...\S-25 METAL BRIDGE RAIL - HANDRAIL.dgn

SIGNATURE/BLOCK:
Stantec Consulting Services Inc.
55 Church Street
Suite 601
New Haven, CT 06510

PROJECT TITLE:
REPLACEMENT OF BRIDGE NO. 01018, ROUTE 53 OVER SAUGATUCK RIVER

TOWN: REDDING

DRAWING TITLE: METAL BRIDGE RAIL - HANDRAIL

PROJECT NO. 116-133
DRAWING NO. S-25
SHEET NO. 04.25