Appendix A
Superstructure Field Notes

Dewberry

Calculation Sheet

Designer RFP Date 08/29/2014 Checker _____ Date _____

Title BRIDGE 03014A Job No. _____

Subject DESIGN INSPECTION Sheet No. _____ of _____

DETERIORATION LEGEND

(A) = AREA OF SIP FORMS WITH HEAVY RUST AND PERFORATIONS

(B) = SECTION LOSS IN BOTTOM OF WEB AT BEAM/GIRDER ENDS

(B') = SECTION LOSS IN WEB OTHER THAN AT LOCATION (B)

(C) = SECTION LOSS IN BOTTOM FLANGE AT BEAM/GIRDER ENDS

(C') = SECTION LOSS IN BOTTOM FLANGE OTHER THAN AT LOCATION (C)

(D) = SECTION LOSS IN DIAPHRAGM CONNECTION/ BEARING STIFFENER PLATES

(E) = SECTION LOSS IN TOP FLANGE AT BEAM/GIRDER ENDS

(E') = SECTION LOSS IN TOP FLANGE OTHER THAN AT LOCATION (E)

(F) = SEE SKETCH ON FRAMING PLAN N

[#] = INSPECTION PHOTO REFERENCE, SEE PHOTO LOG

SPAN A

FIELD NOTES

PREPARED BY: Garg Consulting Services, Inc.

PROJ. NO. 170-3013

DATE: 11/02/2010

BRIDGE NO. 3014A

CREW: CL, MD, SN

SHEET 43 of 44

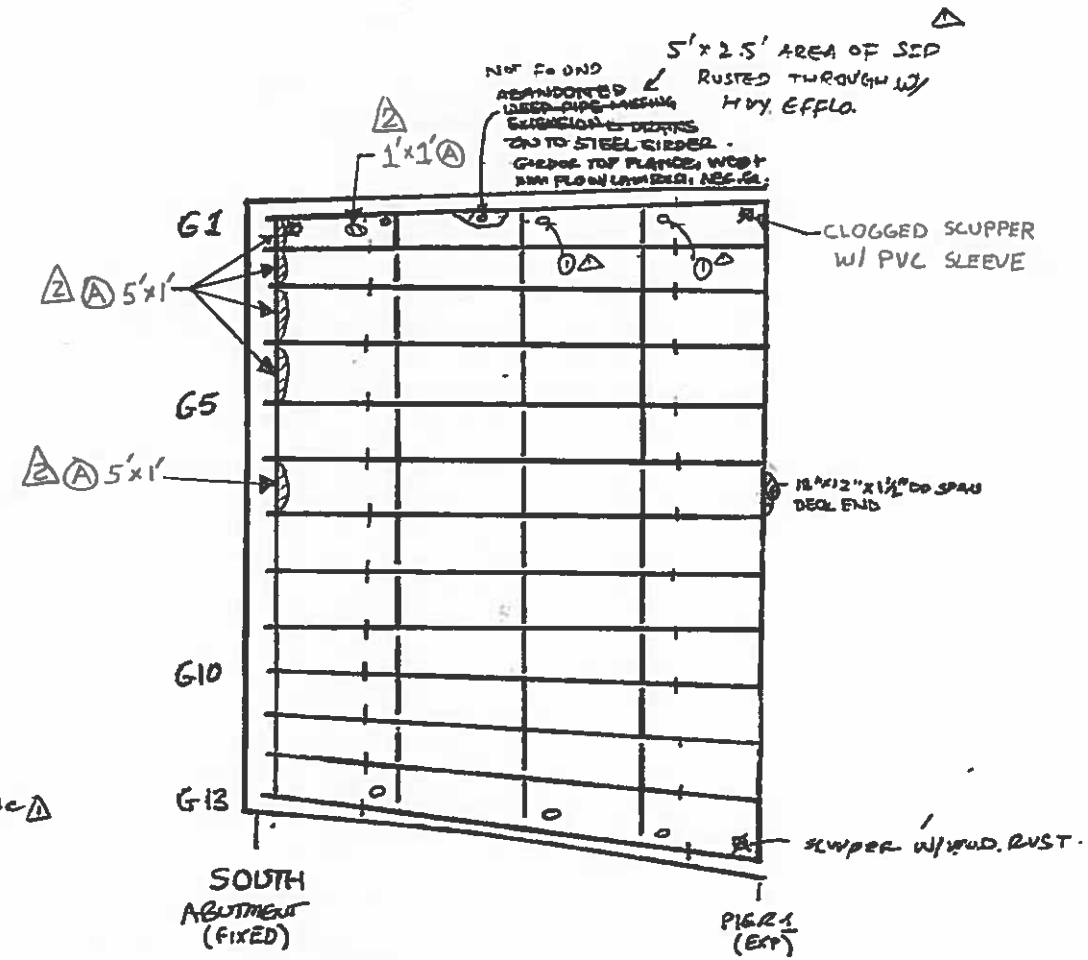

① Abandoned w/ weep pipe △

+ BOTTOM FL. CON. PLATE END CHECKED 100% HANDS ON.

O - Weeps

⊗ Scupper

LEGEND

- HOLLOW AREA
- SHALLOW REBAR
- SPALL AREA
- SPALL AREA WITH EXPOSED REBAR
- MAP CRACKS OR HAIRLINE MAP CRACKS
- HAIRLINE CRACKS (HLC) OR CRACKS (CR)
- HONEY COMB AREA
- SCALE AREA (HVY, MED, OR LT)

GENERAL NOTES:

- MOD-HVY RUST ON SIP FORMS @ SCUPPER & WEEP LOCATIONS.
- SIP FORMS SAGGING @ RANDOM LOCS UP TO 2" (AS-BUILT).
- SIP FORMS HAVE RANDOM PERFORATIONS UP TO FULL BAY WIDTH & 6"L ESPECIALLY @ END DIAPH. HAUNCHES.
- RANDOM GIRDER ENDS & END STIFFENERS HAVE PAINTED OVER PITTING & SPOTTY RUST.
- RANDOM FIXED BEARINGS HAVE UP TO 3/8" PACK RUST BTWN. SOLE & MASONRY PLATES.

FRAMING PLAN SPAN A

△2 SEE DETAIL SHEETS FOR MORE INFORMATION

Revision	Date	Crew	Company
△2	6/30/14	RFP, PHH	DEW
△1	9/8/12	PKG, AKL	GTM2

Dewberry	FIELD NOTES	JOB NO.	BRIDGE NO: 03014 A
59 Elm Street, Suite 101 New Haven, CT 06510		DATE: 6/30/14	SHEET OF
		CREW: RFP, PHH	

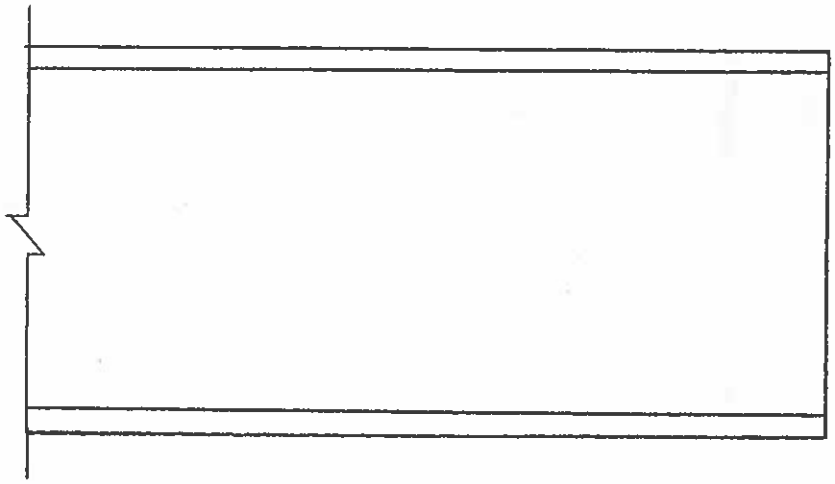

SPAN A, BEAM 1
WEST ELEV. AT S. ABUT

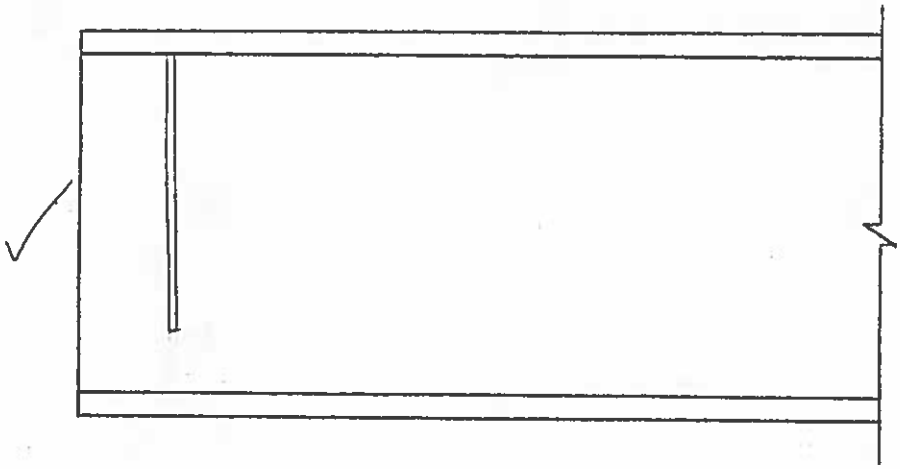

SPAN A, BEAM 1
EAST ELEV. AT S. ABUT

REVISION	DATE	CREW	COMPANY	REVISION	DATE	CREW	COMPANY
1				3			
2				4			

Dewberry	FIELD NOTES	JOB NO.	BRIDGE NO: 03014 A
59 Elm Street, Suite 101 New Haven, CT 06510		DATE: 6/30/2014	SHEET OF
		CREW: RFP, PHH	

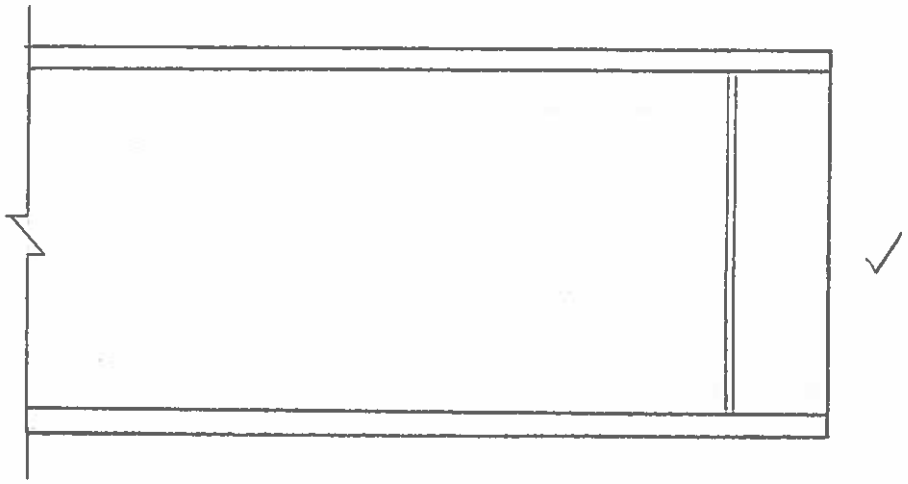

SPAN A, BEAM 2
WEST ELEV. AT S. ABUT

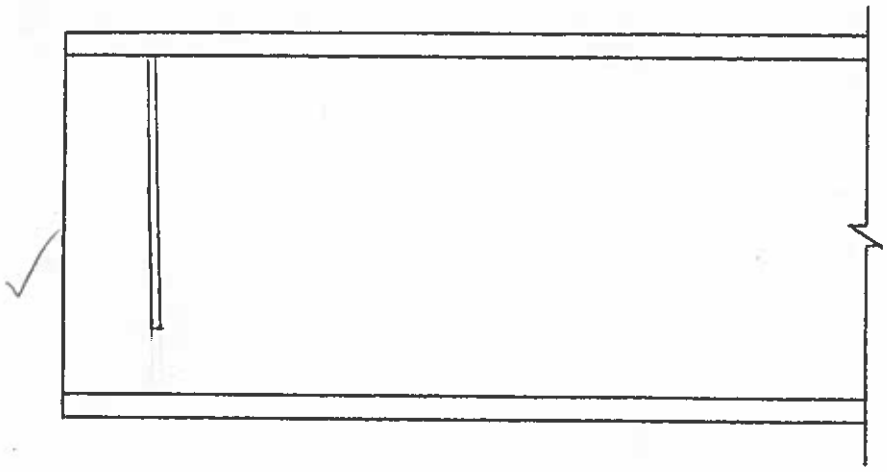

SPAN A, BEAM 2
EAST ELEV. AT S. ABUT

REVISION 1	DATE	CREW	COMPANY	REVISION 3	DATE	CREW	COMPANY
REVISION 2	DATE	CREW	COMPANY	REVISION 4	DATE	CREW	COMPANY

Dewberry	FIELD NOTES	JOB NO.	BRIDGE NO: 03014 A
59 Elm Street, Suite 101 New Haven, CT 06510		DATE: 6/30/2014	SHEET OF
		CREW: RFP, PHH	

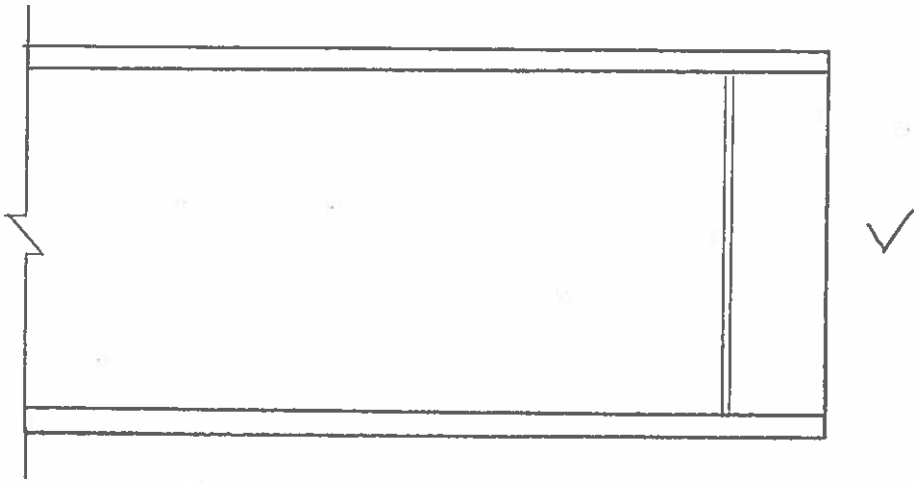

SPAN A, BEAM 3
WEST ELEV. AT S. ABUT

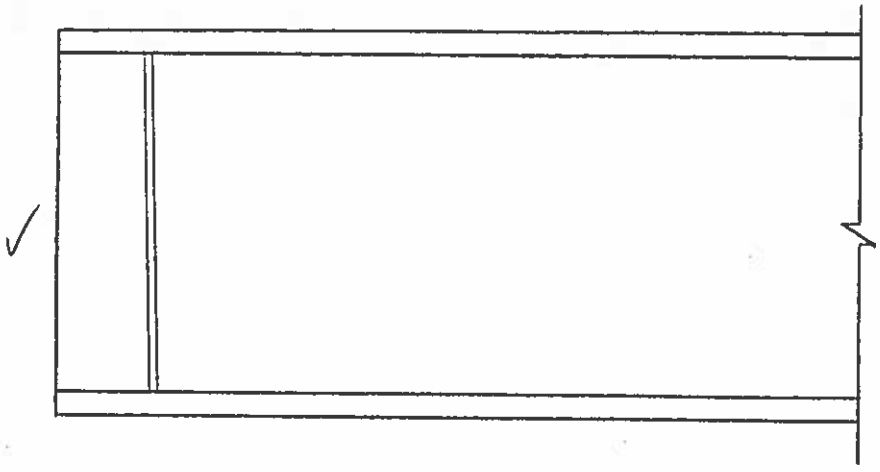

SPAN A, BEAM 3
EAST ELEV. AT S. ABUT

REVISION 1	DATE	CREW	COMPANY	REVISION 3	DATE	CREW	COMPANY
REVISION 2	DATE	CREW	COMPANY	REVISION 4	DATE	CREW	COMPANY

Dewberry
59 Elm Street, Suite 101
New Haven, CT 06510

FIELD NOTES

JOB NO.

BRIDGE NO: 03014 A

DATE: 6/30/2014

SHEET OF

CREW: RFP, PHH

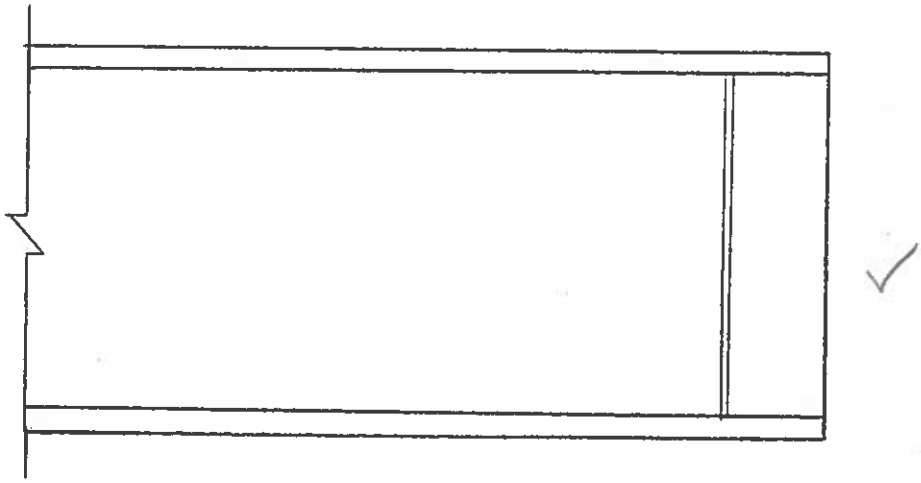

SPAN A, BEAM 4
WEST ELEV. AT S. ABUT

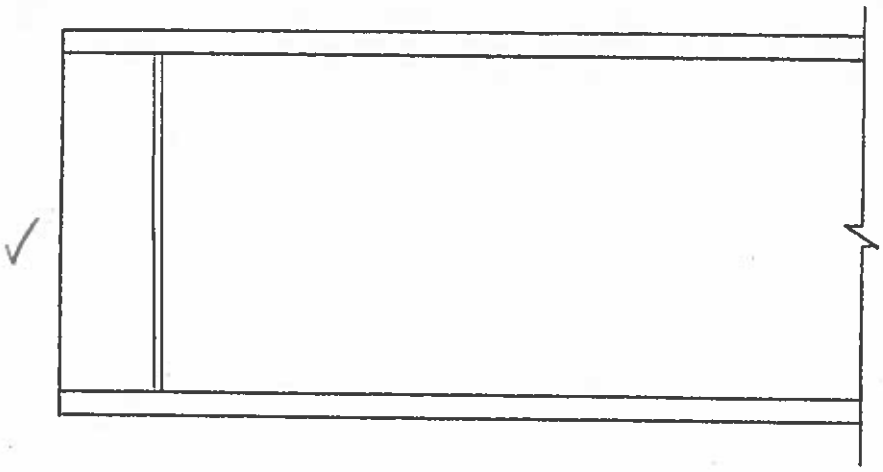

SPAN A, BEAM 4
EAST ELEV. AT S. ABUT

REVISION	DATE	CREW	COMPANY	REVISION	DATE	CREW	COMPANY
1				3			
2				4			

Dewberry® 59 Elm Street, Suite 101 New Haven, CT 06510	FIELD NOTES	JOB NO.	BRIDGE NO: 03014 A
		DATE: 6/30/2014	SHEET OF
		CREW: RFP, PHH	

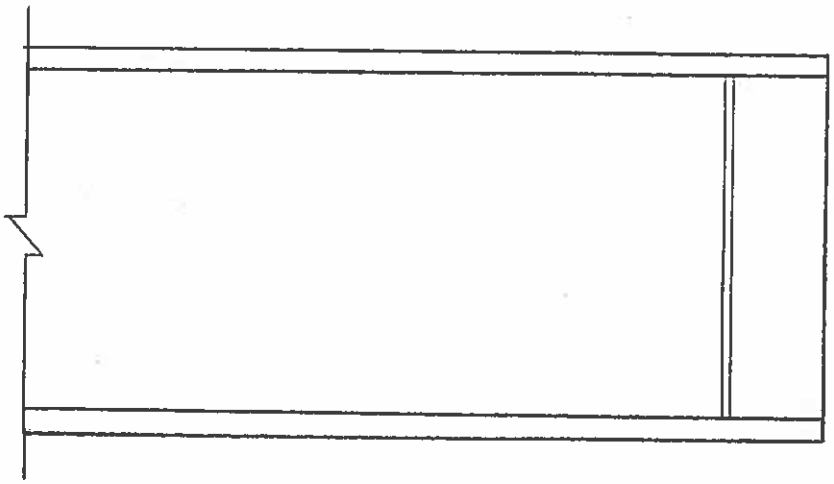

SPAN A, BEAM 5
WEST ELEV. AT S. ABUT

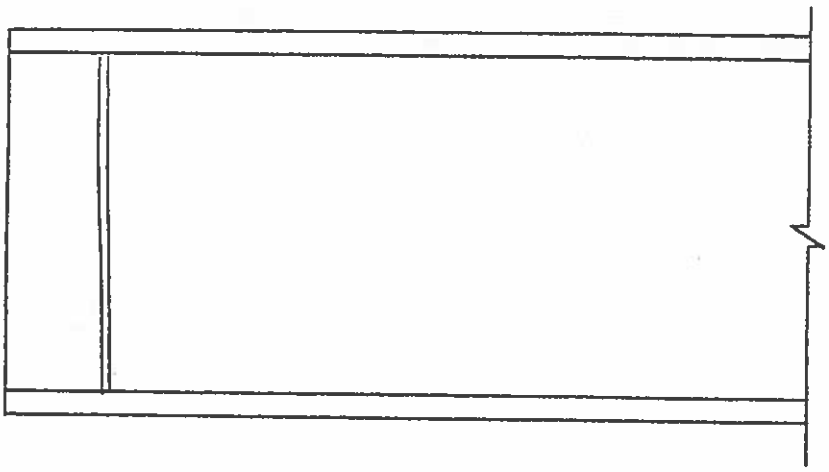

SPAN A, BEAM 5
EAST ELEV. AT S. ABUT

REVISION 1	DATE	CREW	COMPANY	REVISION 3	DATE	CREW	COMPANY
REVISION 2	DATE	CREW	COMPANY	REVISION 4	DATE	CREW	COMPANY

Dewberry	FIELD NOTES	JOB NO.	BRIDGE NO: 03014 A
59 Elm Street, Suite 101 New Haven, CT 06510		DATE: 6/30/2014	SHEET OF
		CREW: RFP, PHH	

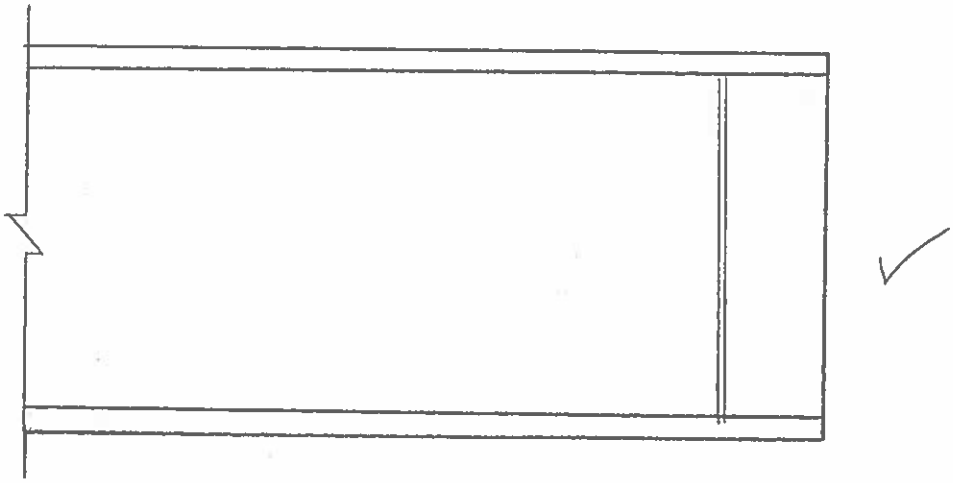

SPAN A, BEAM 6
WEST ELEV. AT S. ABUT

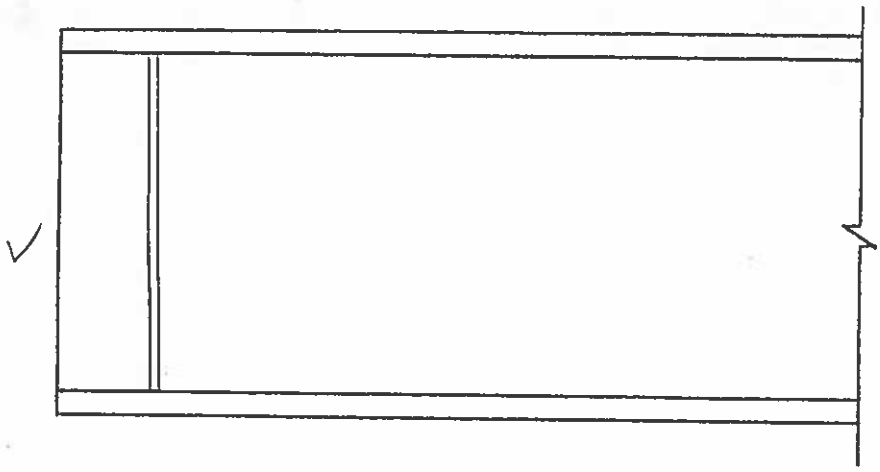

SPAN A, BEAM 6
EAST ELEV. AT S. ABUT

REVISION	DATE	CREW	COMPANY	REVISION	DATE	CREW	COMPANY
1				3			
2				4			

Dewberry® 59 Elm Street, Suite 101 New Haven, CT 06510	FIELD NOTES	JOB NO.	BRIDGE NO: 03014 A
		DATE: 6/30/2014	SHEET OF
		CREW: RFP, PHH	

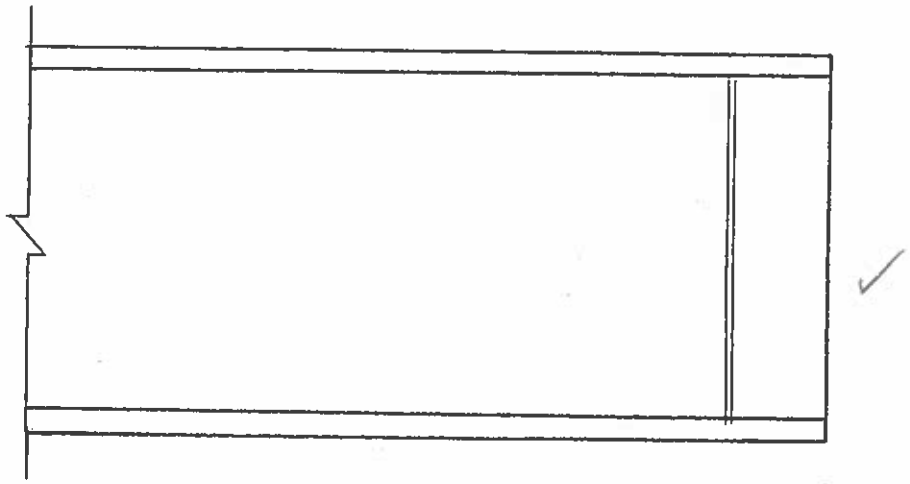

SPAN A, BEAM 7
WEST ELEV. AT S. ABUT

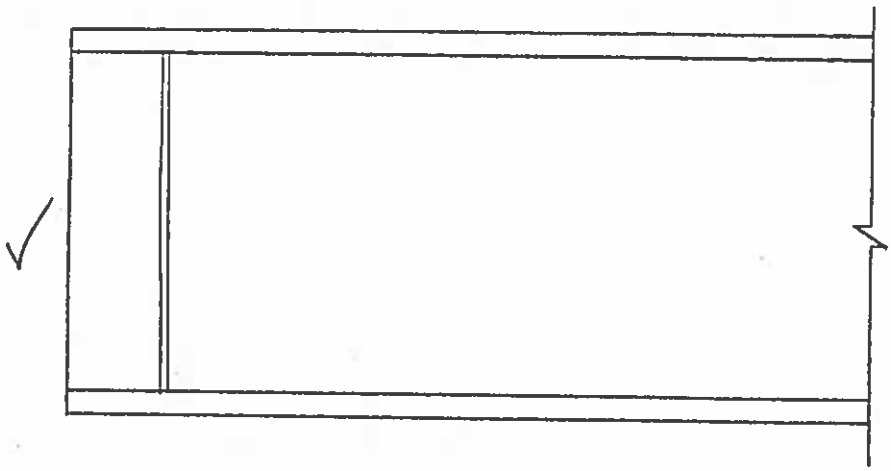

SPAN A, BEAM 7
EAST ELEV. AT S. ABUT

REVISION 1	DATE	CREW	COMPANY	REVISION 3	DATE	CREW	COMPANY
REVISION 2	DATE	CREW	COMPANY	REVISION 4	DATE	CREW	COMPANY

Dewberry
59 Elm Street, Suite 101
New Haven, CT 06510

FIELD NOTES

JOB NO.

BRIDGE NO: 03014 A

DATE: 6/30/2014

SHEET OF

CREW: RFD, PHH

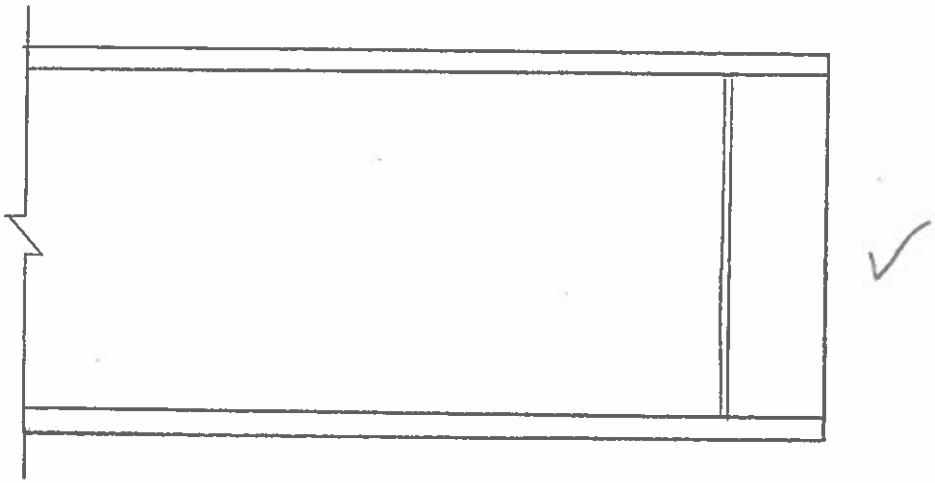

SPAN A, BEAM 8
WEST ELEV. AT S. ABUT

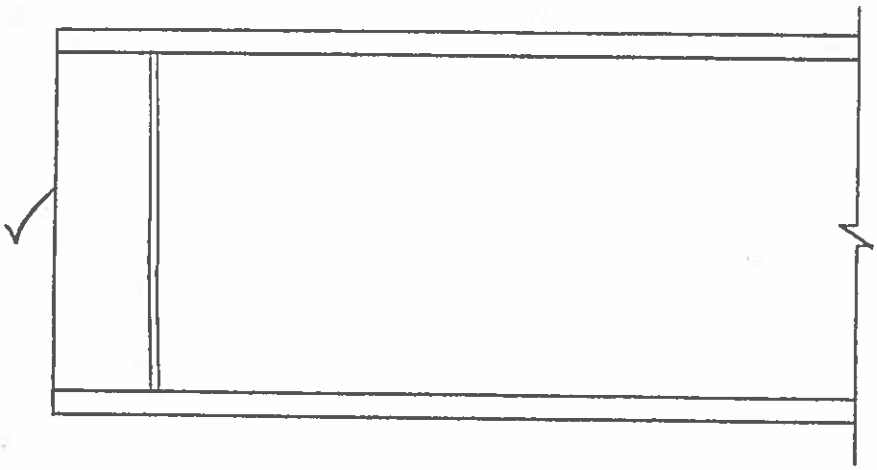

SPAN A, BEAM 8
EAST ELEV. AT S. ABUT

REVISION	DATE	CREW	COMPANY	REVISION	DATE	CREW	COMPANY
1				3			
2				4			

Dewberry	FIELD NOTES	JOB NO.	BRIDGE NO: 03014 A
59 Elm Street, Suite 101 New Haven, CT 06510		DATE: 6/30/2014	SHEET OF
		CREW: RFP, PHH	

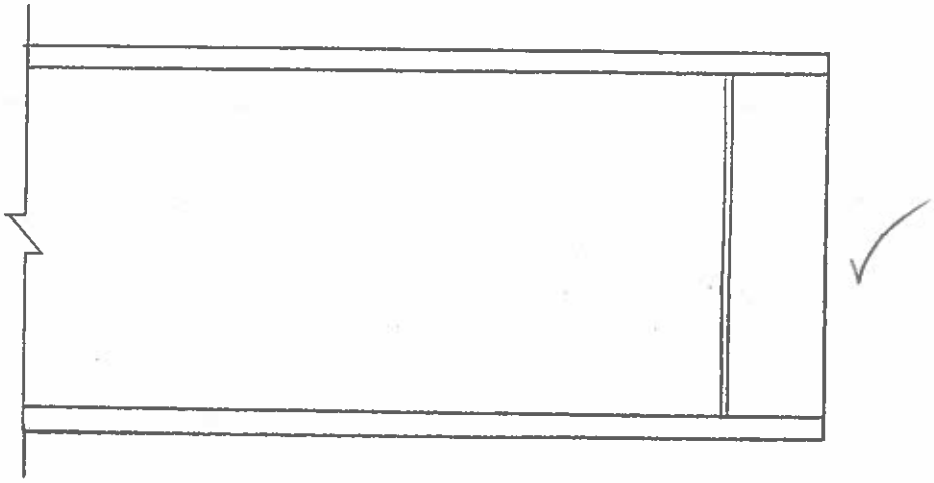

SPAN A, BEAM 9
WEST ELEV. AT S. ABUT

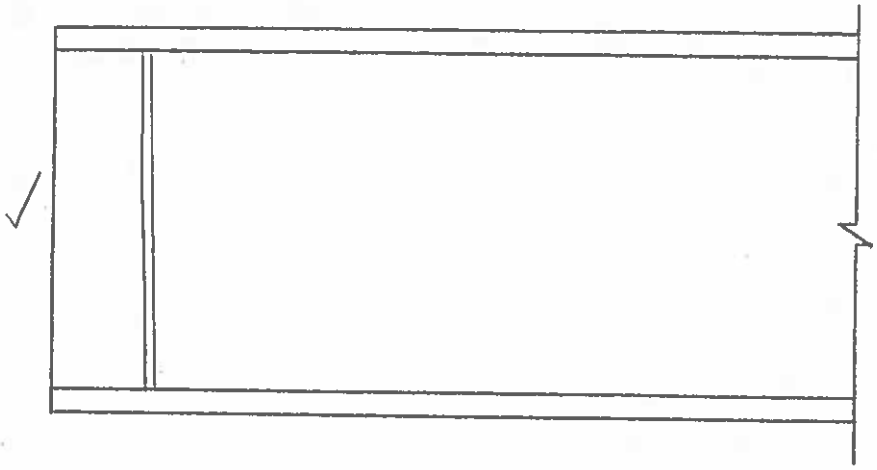

SPAN A, BEAM 9
EAST ELEV. AT S. ABUT

REVISION 1	DATE	CREW	COMPANY	REVISION 3	DATE	CREW	COMPANY
REVISION 2	DATE	CREW	COMPANY	REVISION 4	DATE	CREW	COMPANY

Dewberry
59 Elm Street, Suite 101
New Haven, CT 06510

FIELD NOTES

JOB NO.

BRIDGE NO: 03014 A

DATE: 6/30/2014

SHEET OF

CREW: RFD, PHB

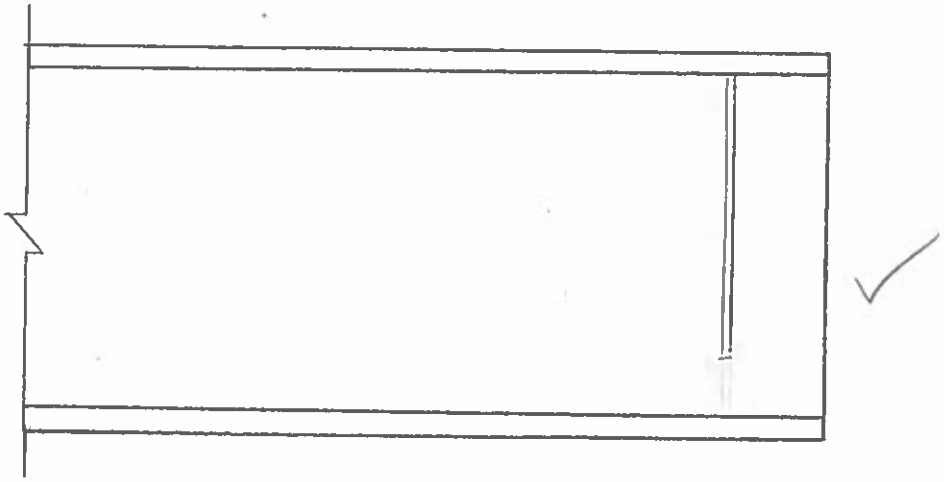

SPAN A, BEAM 1D
WEST ELEV. AT S. ABUT

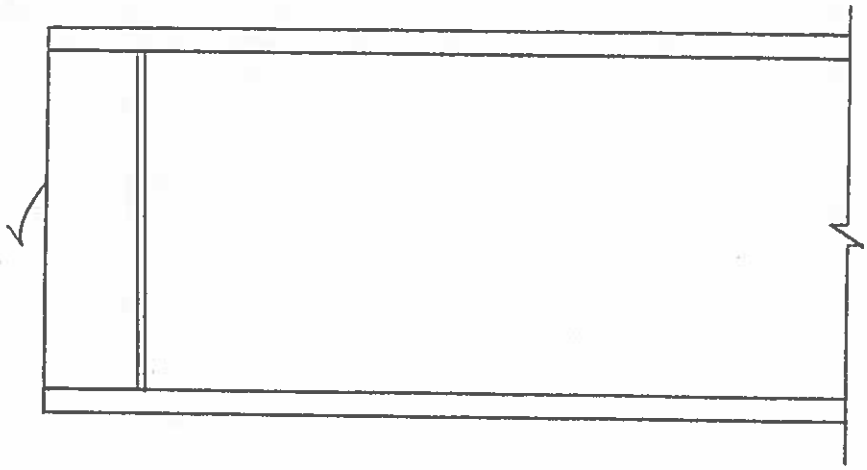

SPAN A, BEAM 1D
EAST ELEV. AT S. ABUT

REVISION	DATE	CREW	COMPANY	REVISION	DATE	CREW	COMPANY
1				3			
2				4			

Dewberry
59 Elm Street, Suite 101
New Haven, CT 06510

FIELD NOTES

JOB NO.

BRIDGE NO: 03014A

DATE: 6/30/2014

SHEET OF

CREW: RFP, PHH

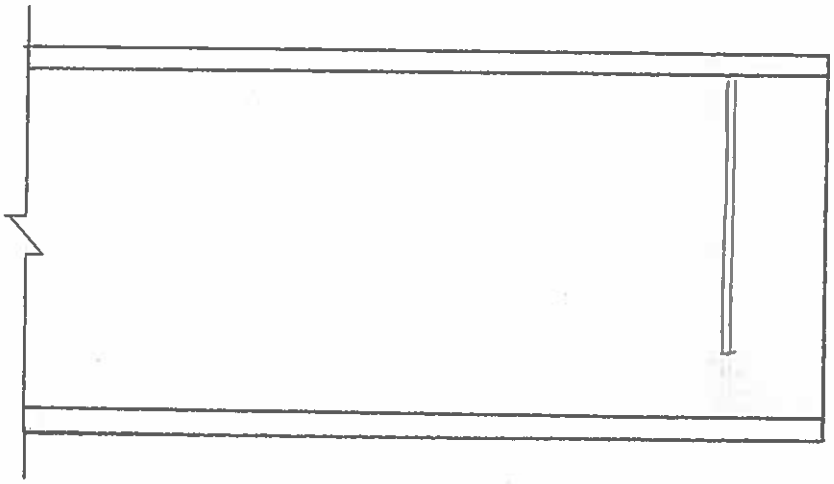

SPAN A, BEAM 11
WEST ELEV. AT S. ABUT

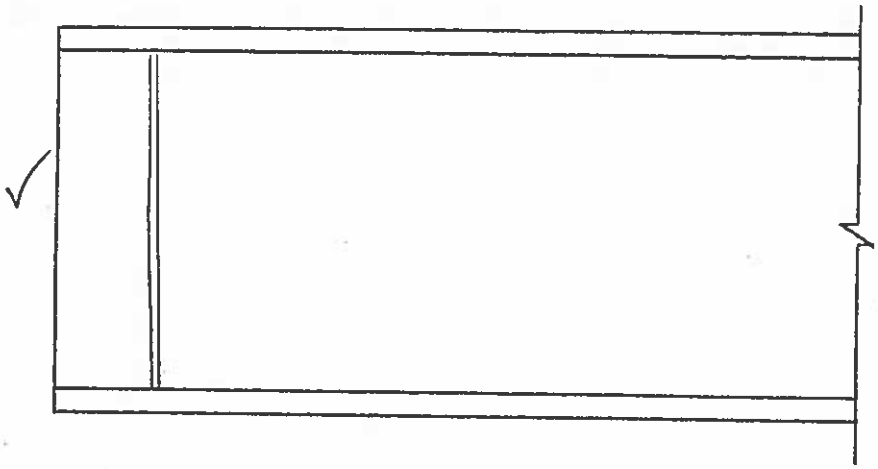

SPAN A, BEAM 11
EAST ELEV. AT S. ABUT

REVISION	DATE	CREW	COMPANY	REVISION	DATE	CREW	COMPANY
1				3			
2				4			

Dewberry
59 Elm Street, Suite 101
New Haven, CT 06510

FIELD NOTES

JOB NO.

BRIDGE NO: 03014 A

DATE: 6/30/2014

SHEET OF

CREW: RFP, PHH

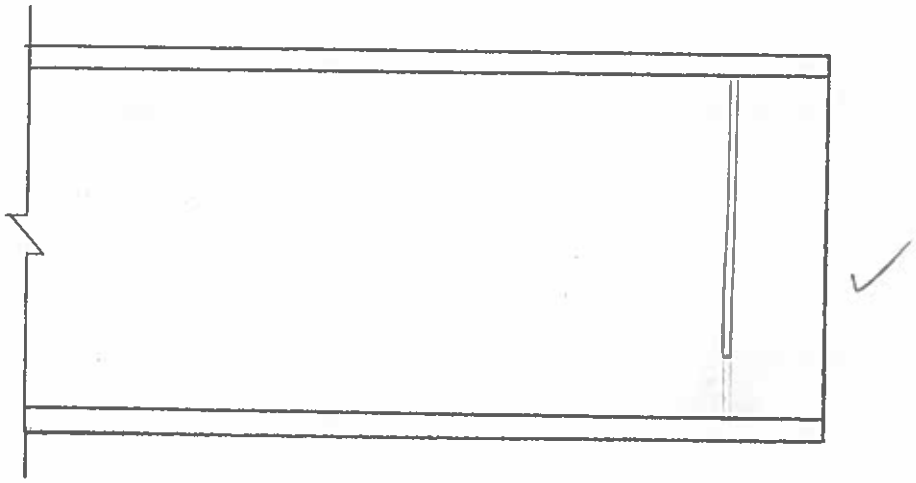

SPAN A, BEAM 12
WEST ELEV. AT S. ABUT

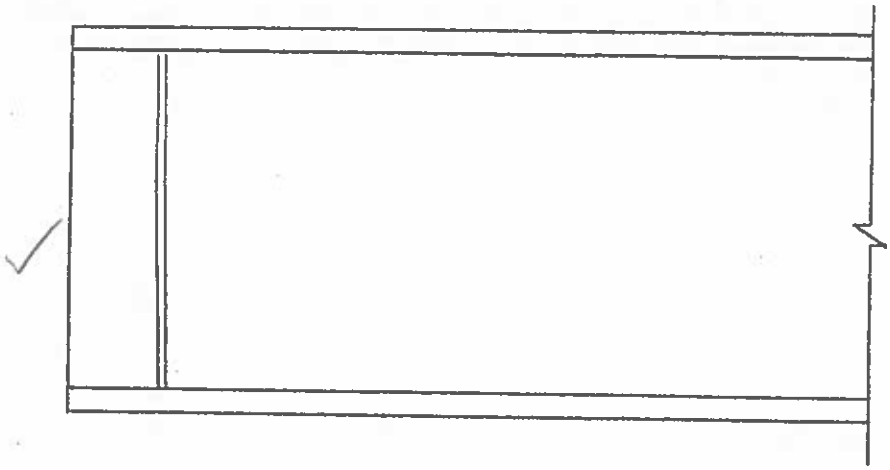

SPAN A, BEAM 12
EAST ELEV. AT S. ABUT

REVISION	DATE	CREW	COMPANY	REVISION	DATE	CREW	COMPANY
1				3			
2				4			

Dewberry®	FIELD NOTES	JOB NO.	BRIDGE NO: 03014 A
59 Elm Street, Suite 101 New Haven, CT 06510		DATE: 6/30/2014	SHEET OF
		CREW: RFP, PHH	

BEAM END TIPPED EAST 7/16" OVER 2'-0"

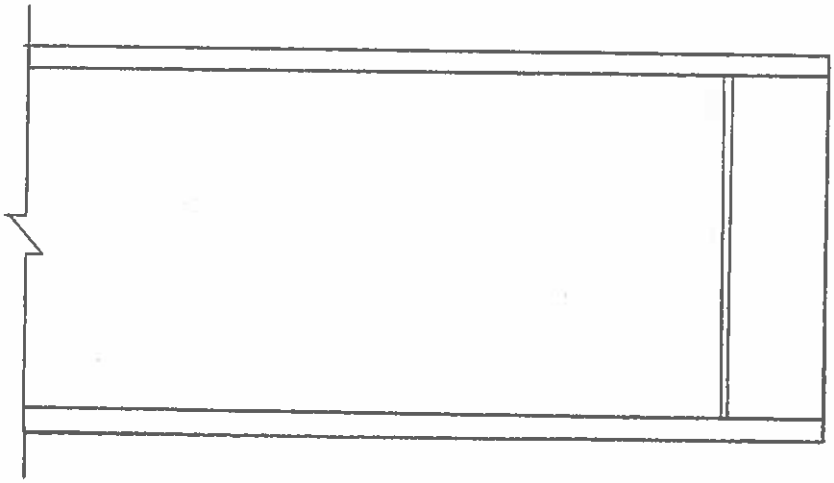

- NO SECTION LOSS
- BOT. FLANGE IS LEVEL

SPAN A, BEAM 13
WEST ELEV. AT S. ABUT

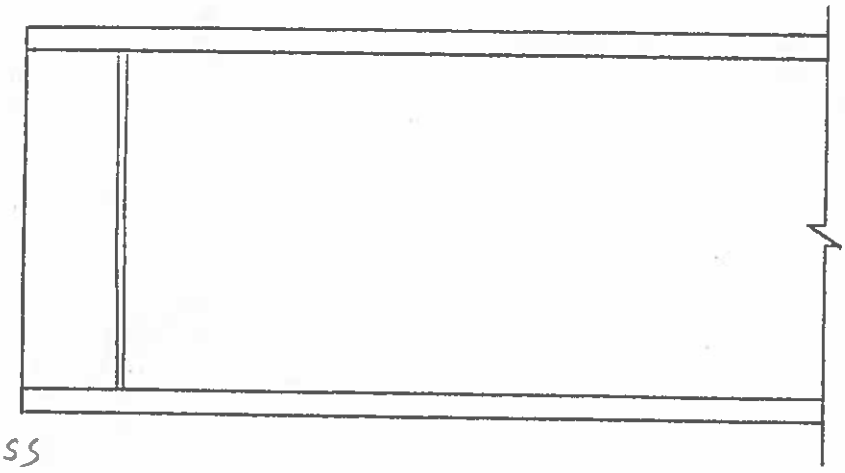

- NO SECTION LOSS

SPAN A, BEAM 13
EAST ELEV. AT S. ABUT

REVISION	DATE	CREW	COMPANY	REVISION	DATE	CREW	COMPANY
1				3			
2				4			

Dewberry
59 Elm Street, Suite 101
New Haven, CT 06510

FIELD NOTES

JOB NO.

BRIDGE NO: 03014A

DATE: 7/8/2014

SHEET OF

CREW: RFP, PHH

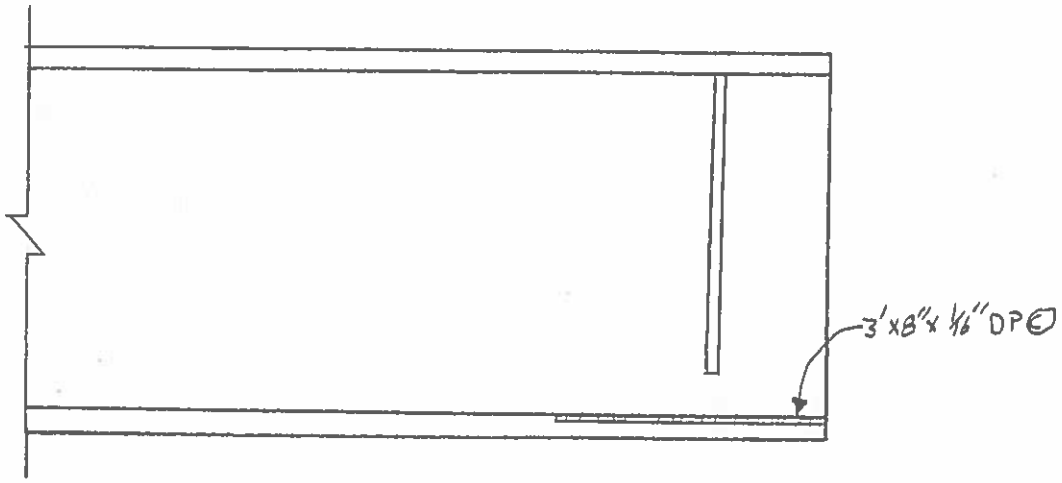

SPAN A, BEAM 1
EAST ELEV. AT P1

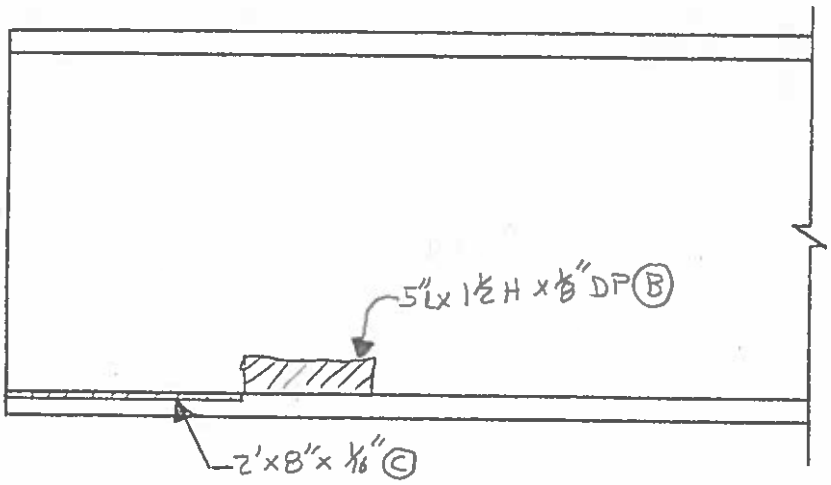

SPAN A, BEAM 1
WEST ELEV. AT P1

REVISION	DATE	CREW	COMPANY	REVISION	DATE	CREW	COMPANY
1				3			
2				4			

Dewberry
59 Elm Street, Suite 101
New Haven, CT 06510

FIELD NOTES

JOB NO.

BRIDGE NO: 03014A

DATE: 7/8/2014

SHEET OF

CREW: RFP, PHH

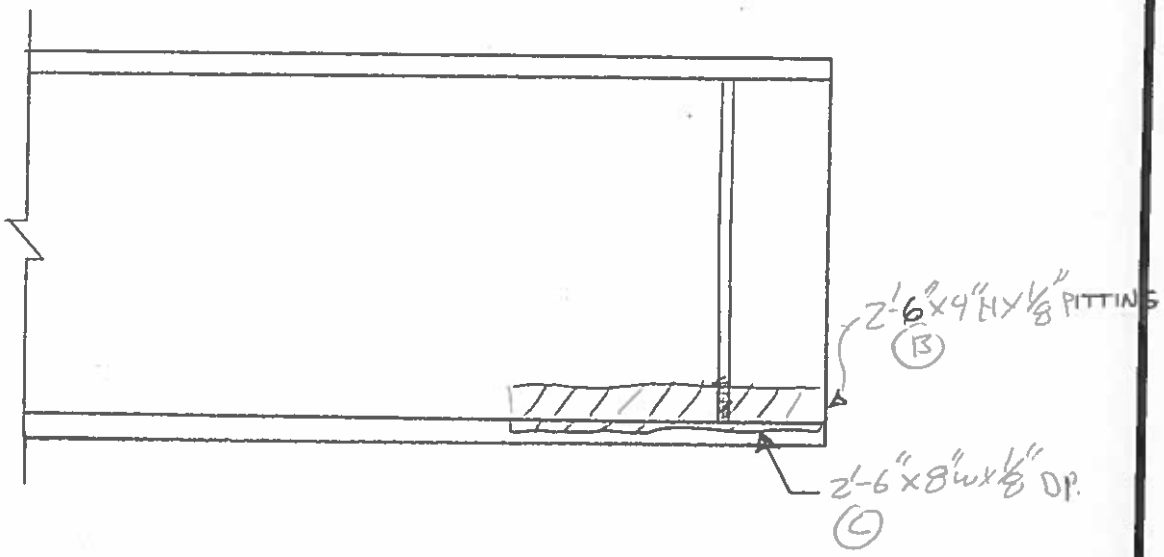

SPAN A, BEAM 2
EAST ELEV. AT P1

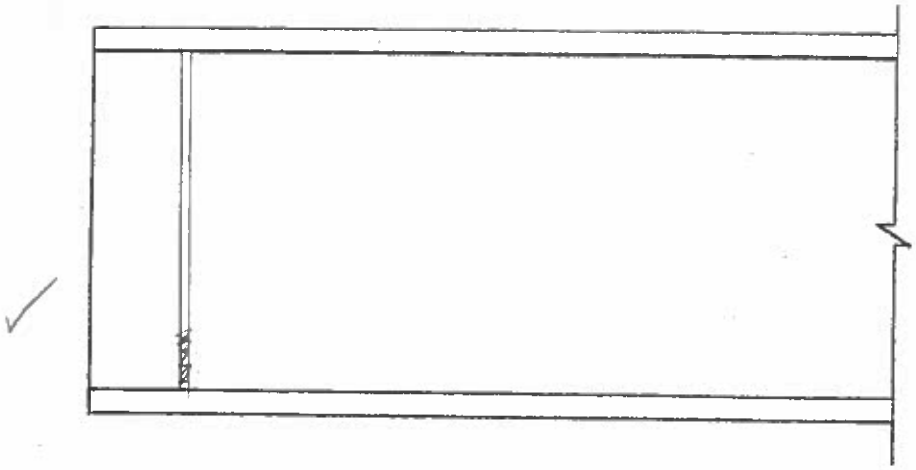

SPAN A, BEAM 2
WEST ELEV. AT P1

REVISION	DATE	CREW	COMPANY	REVISION	DATE	CREW	COMPANY
1				3			
2				4			

Dewberry® 59 Elm Street, Suite 101 New Haven, CT 06510	FIELD NOTES	JOB NO.	BRIDGE NO: 03014 A
		DATE: 7/8/2014	SHEET OF
		CREW: RFP, PHH	

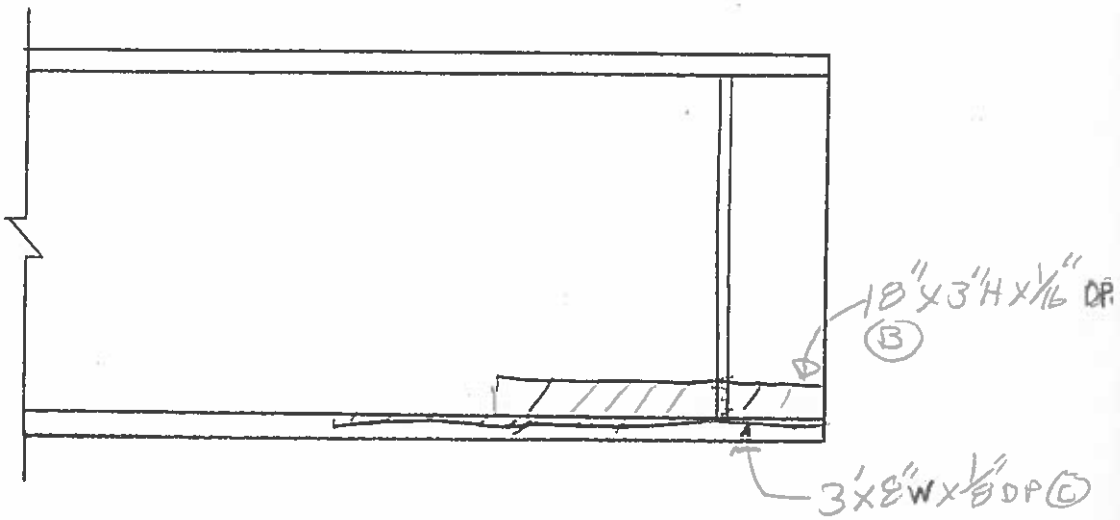

SPAN A, BEAM 3
EAST ELEV. AT P1

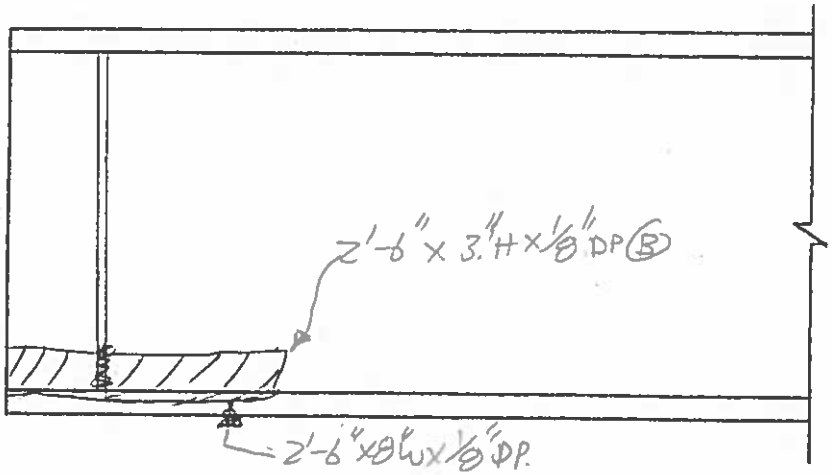

SPAN A, BEAM 3
WEST ELEV. AT P1

REVISION 1	DATE	CREW	COMPANY	REVISION 3	DATE	CREW	COMPANY
REVISION 2	DATE	CREW	COMPANY	REVISION 4	DATE	CREW	COMPANY

Dewberry
59 Elm Street, Suite 101
New Haven, CT 06510

FIELD NOTES

JOB NO.

BRIDGE NO: 03014 A

DATE: 7/8/2014

SHEET OF

CREW: RFP, PHH

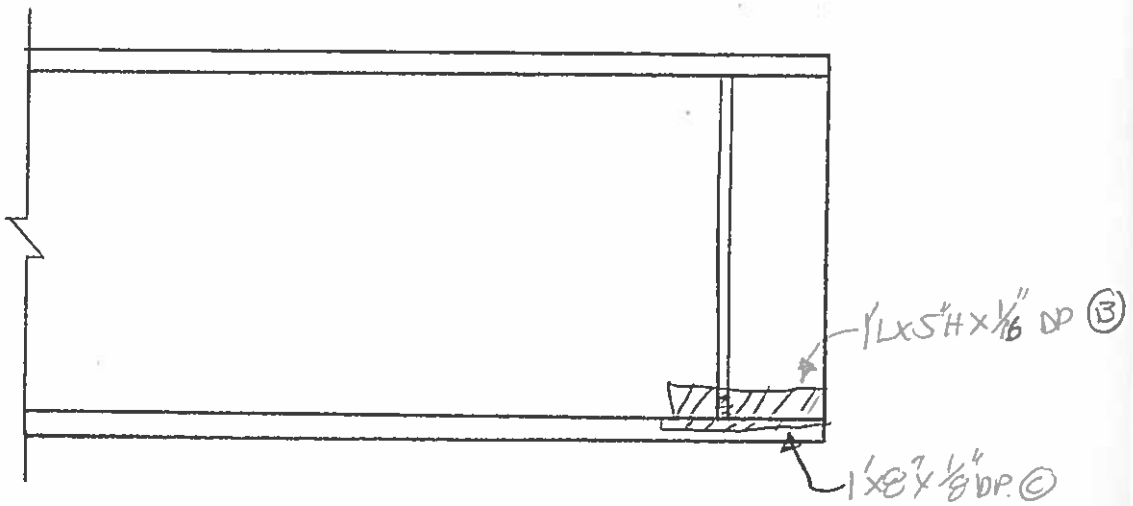

SPAN A, BEAM 4
EAST ELEV. AT P1

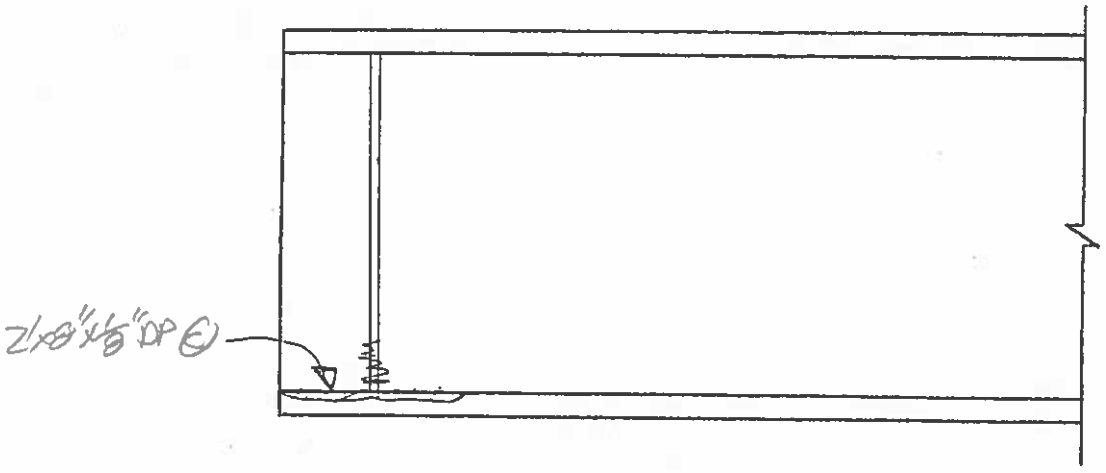

SPAN A, BEAM 4
WEST ELEV. AT P1

REVISION 1	DATE	CREW	COMPANY	REVISION 3	DATE	CREW	COMPANY
REVISION 2	DATE	CREW	COMPANY	REVISION 4	DATE	CREW	COMPANY

Dewberry
59 Elm Street, Suite 101
New Haven, CT 06510

FIELD NOTES

JOB NO.

BRIDGE NO: 03014A

DATE: 7/8/2014

SHEET OF

CREW: RFP, PHH

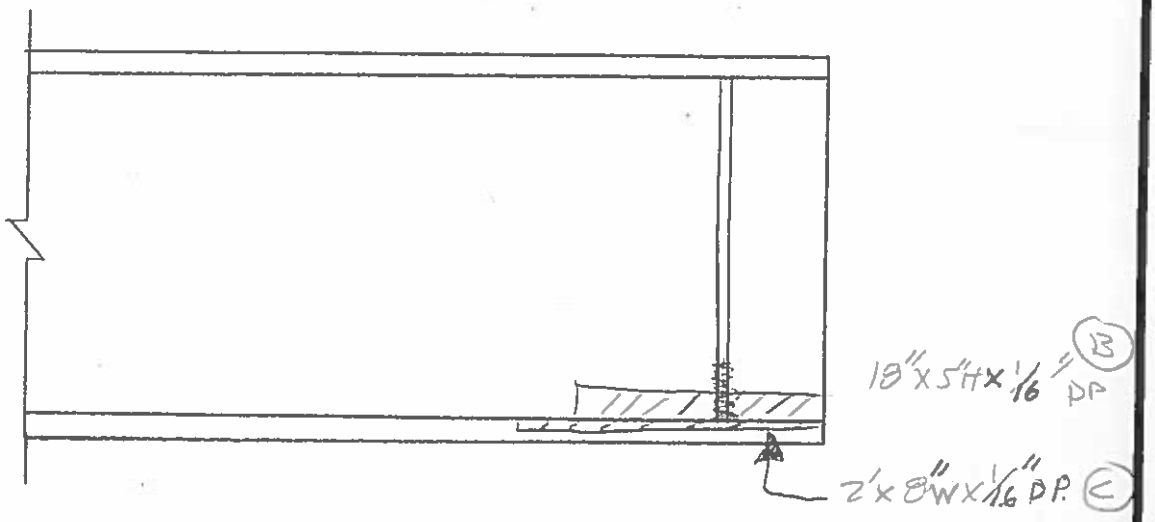

SPAN A, BEAM 5
EAST ELEV. AT P1

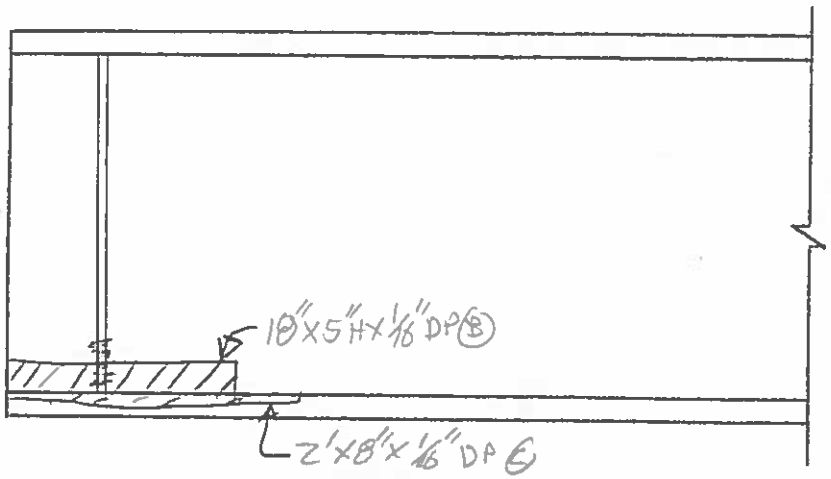

SPAN A, BEAM 5
WEST ELEV. AT P1

REVISION	DATE	CREW	COMPANY	REVISION	DATE	CREW	COMPANY
1				3			
2				4			

Dewberry	FIELD NOTES	JOB NO.	BRIDGE NO: 03014 A
59 Elm Street, Suite 101 New Haven, CT 06510		DATE: 7/8/2014	SHEET OF
		CREW: RFP, PHH	

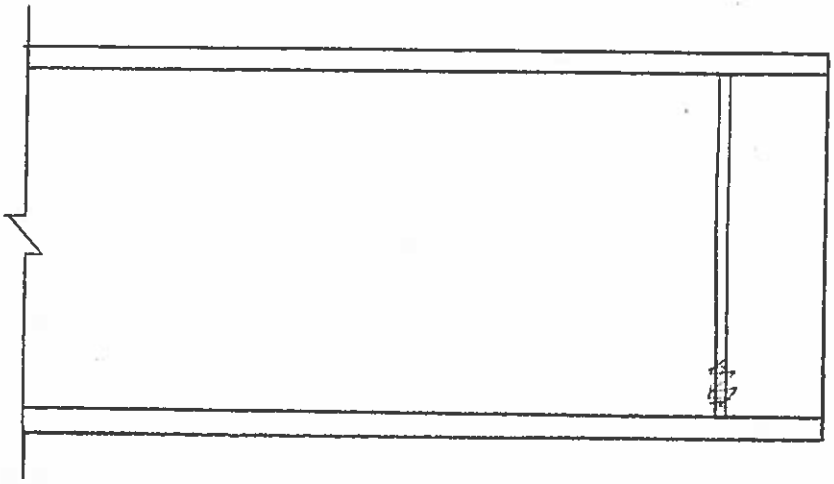

SPAN A, BEAM 6
EAST ELEV. AT P1

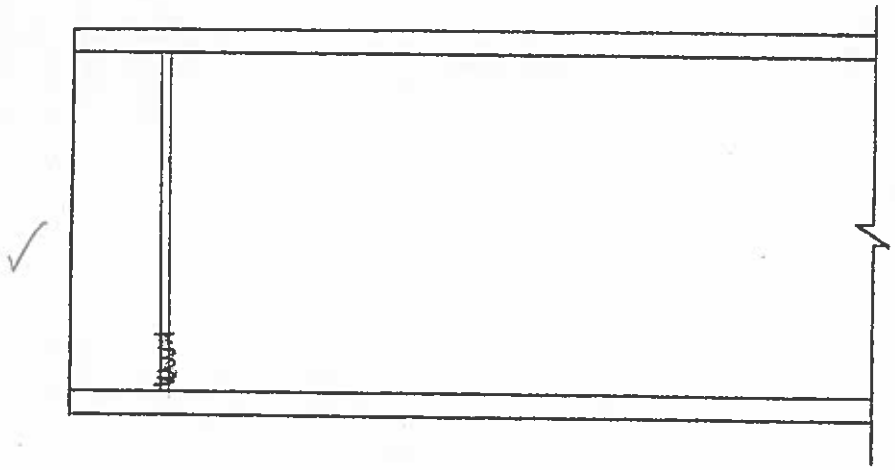

SPAN A, BEAM 6
WEST ELEV. AT P1

REVISION 1	DATE	CREW	COMPANY	REVISION 3	DATE	CREW	COMPANY
REVISION 2	DATE	CREW	COMPANY	REVISION 4	DATE	CREW	COMPANY

Dewberry® 59 Elm Street, Suite 101 New Haven, CT 06510	FIELD NOTES	JOB NO.	BRIDGE NO: 03014 A
		DATE: 6/30/2014	SHEET OF
		CREW: RFP, PHH	

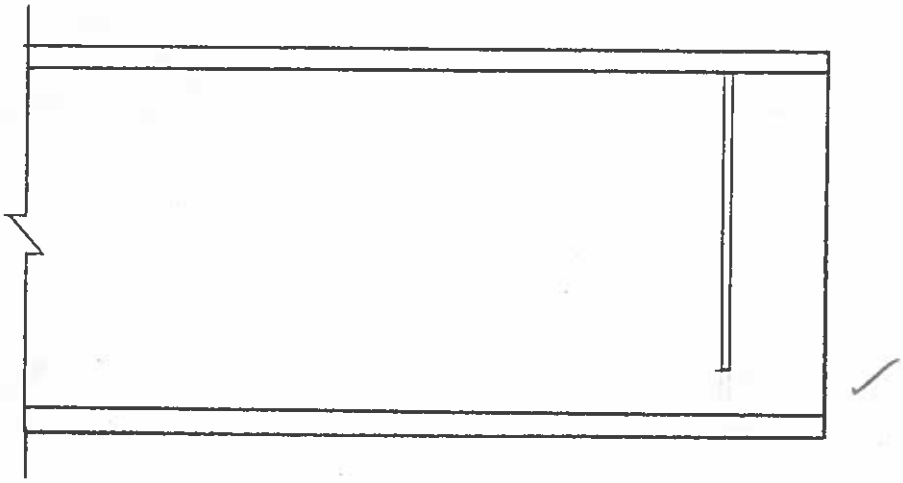

SPAN A, BEAM 7
EAST ELEV. AT P1

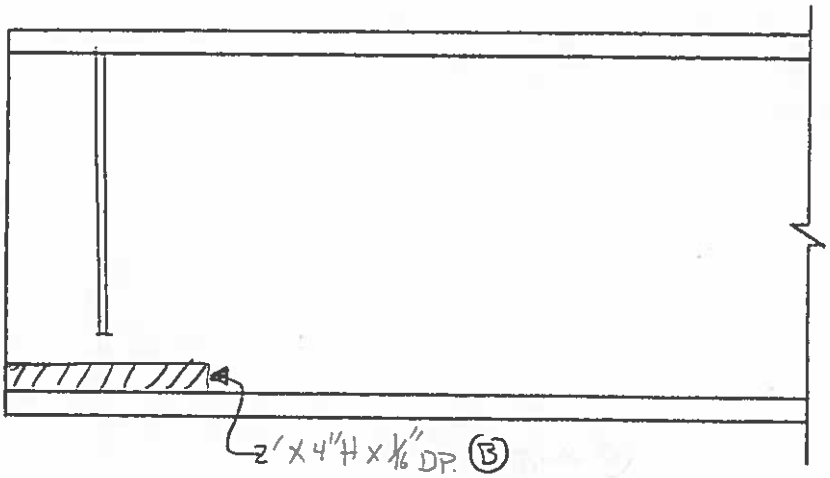

SPAN A, BEAM 7
WEST ELEV. AT P1

REVISION 1	DATE	CREW	COMPANY	REVISION 3	DATE	CREW	COMPANY
REVISION 2	DATE	CREW	COMPANY	REVISION 4	DATE	CREW	COMPANY

Dewberry	FIELD NOTES	JOB NO.	BRIDGE NO: 03014 A
59 Elm Street, Suite 101 New Haven, CT 06510		DATE: 6/30/2014	SHEET OF
		CREW: RFP, PHH	

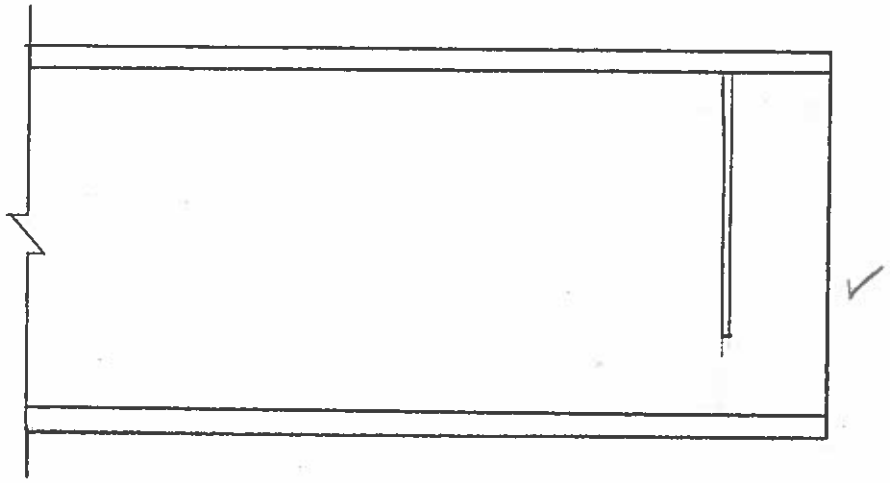

MOD. SURFACE RUST

SPAN A, BEAM 8
EAST ELEV. AT P1

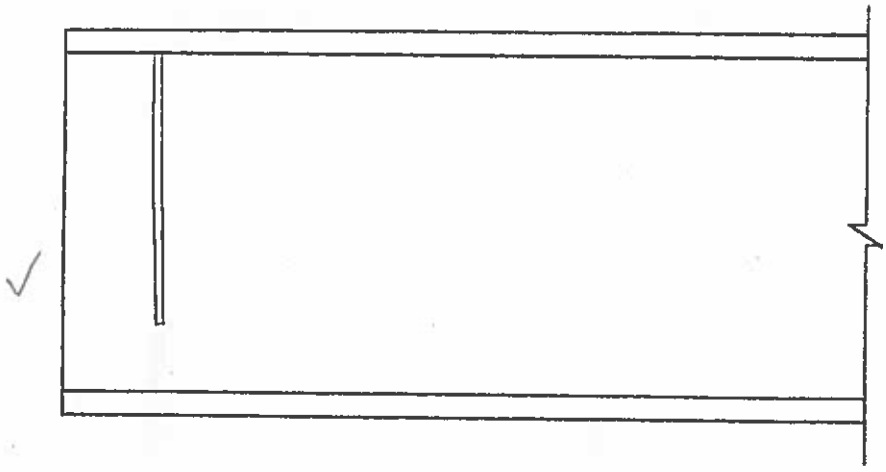

MOD. SURFACE RUST

SPAN A, BEAM 8
WEST ELEV. AT P1

REVISION 1	DATE	CREW	COMPANY	REVISION 3	DATE	CREW	COMPANY
REVISION 2	DATE	CREW	COMPANY	REVISION 4	DATE	CREW	COMPANY

Dewberry
59 Elm Street, Suite 101
New Haven, CT 06510

FIELD NOTES

JOB NO.

BRIDGE NO: 03014 A

DATE: 6/30/2014

SHEET OF

CREW: RFP, PHH

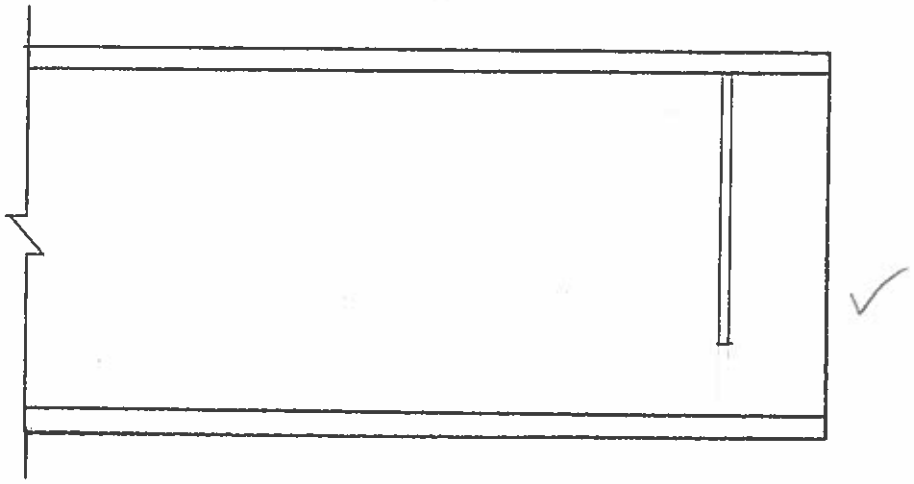

SPAN A, BEAM 9
EAST ELEV. AT P1

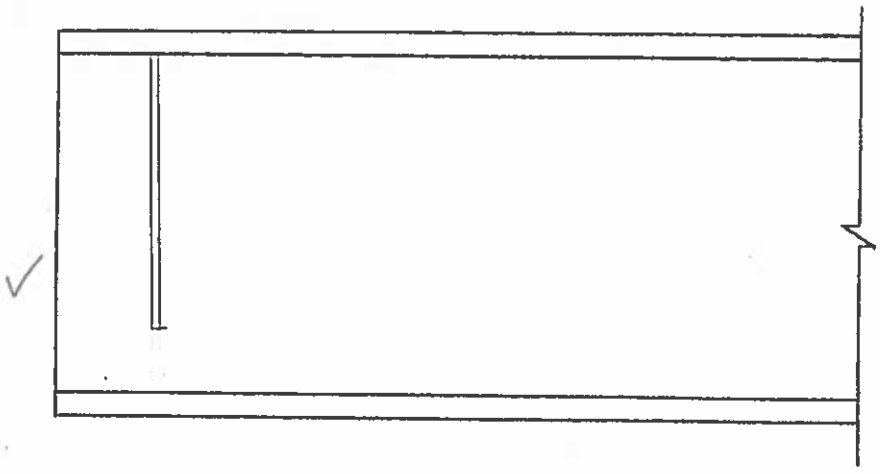

SPAN A, BEAM 9
WEST ELEV. AT P1

REVISION	DATE	CREW	COMPANY	REVISION	DATE	CREW	COMPANY
1				3			
2				4			

Dewberry
59 Elm Street, Suite 101
New Haven, CT 06510

FIELD NOTES

JOB NO.

BRIDGE NO: 03014 A

DATE: 6/30/2014

SHEET OF

CREW: RFP, PHH

• WEB IS TIPPED 9/16" TO EAST OVER 2'

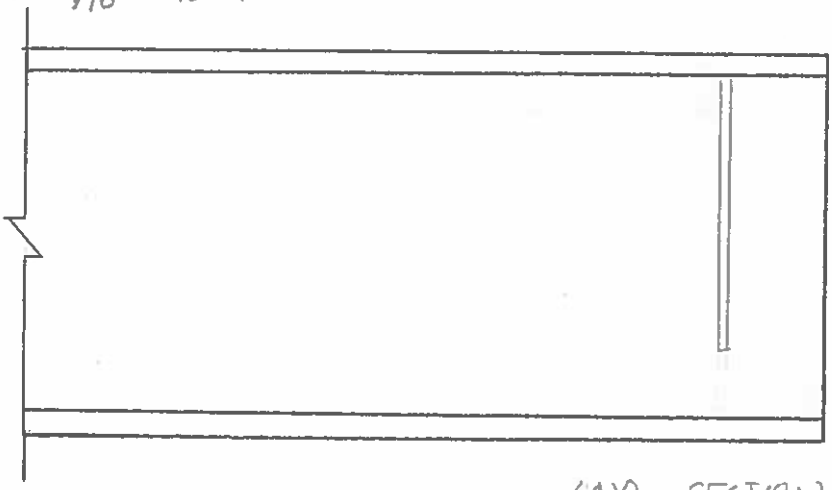

• NO SECTION LOSS

SPAN A, BEAM 10
EAST ELEV. AT P1

• NO SECTION LOSS

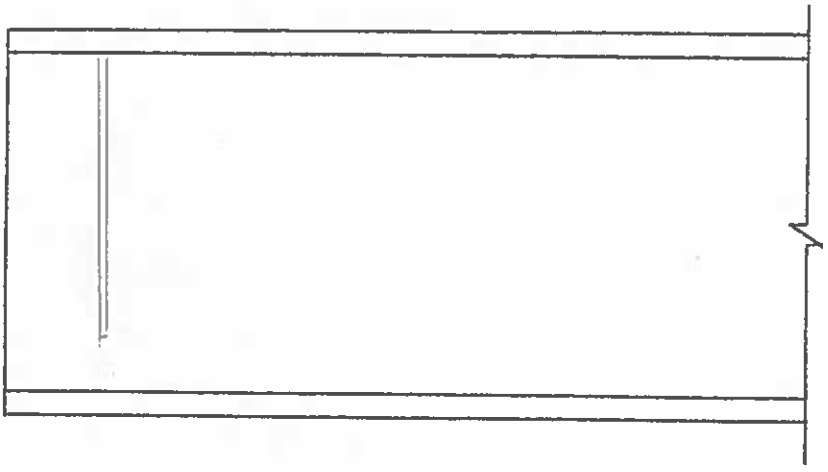

SPAN A, BEAM 10
WEST ELEV. AT P. 1

REVISION 1	DATE	CREW	COMPANY	REVISION 3	DATE	CREW	COMPANY
REVISION 2	DATE	CREW	COMPANY	REVISION 4	DATE	CREW	COMPANY

Dewberry
59 Elm Street, Suite 101
New Haven, CT 06510

FIELD NOTES

JOB NO.

BRIDGE NO: 03014 A

DATE: 6/30/2014

SHEET OF

CREW: RFP, PHH

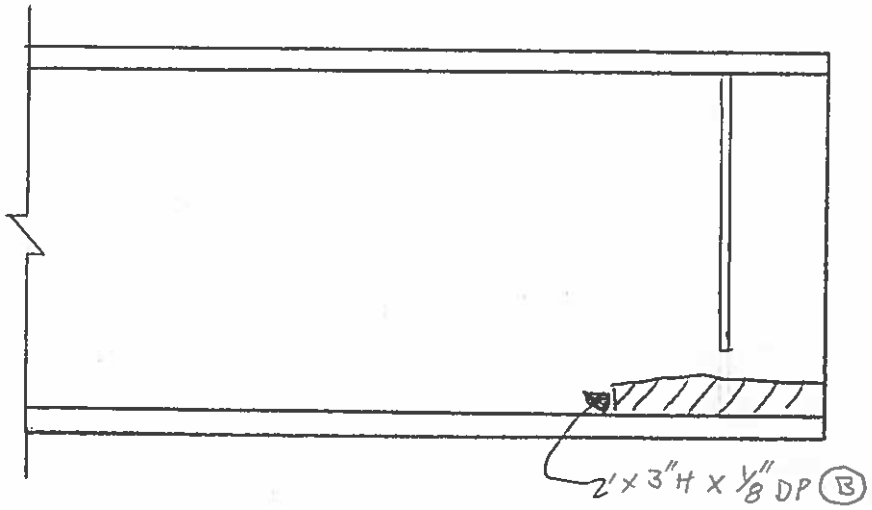

SPAN A, BEAM 11
EAST ELEV. AT P1

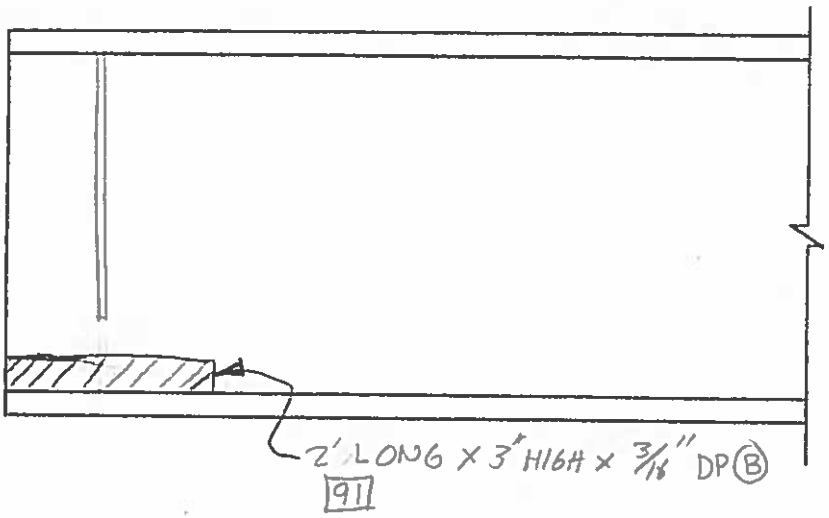

SPAN A, BEAM 11
WEST ELEV. AT P1

REVISION	DATE	CREW	COMPANY	REVISION	DATE	CREW	COMPANY
1				3			
2				4			

Dewberry
59 Elm Street, Suite 101
New Haven, CT 06510

FIELD NOTES

JOB NO.

BRIDGE NO: 03014 A

DATE: 6/30/2014

SHEET OF

CREW: RFP, PHH

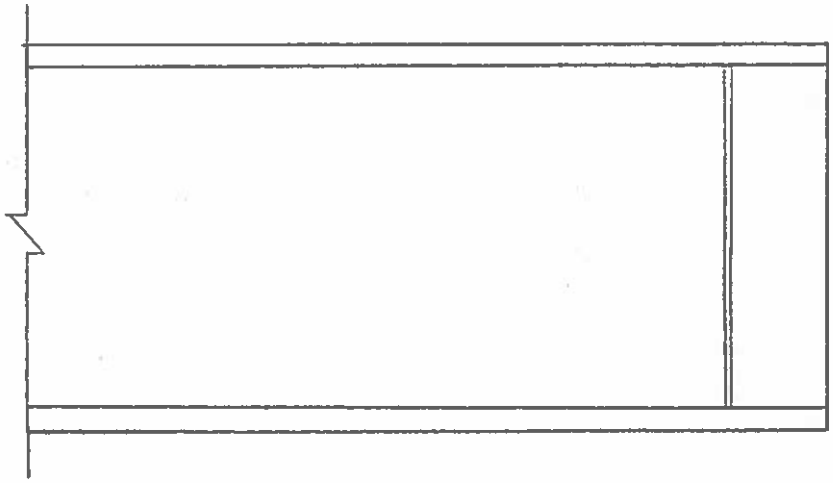

SPAN A, BEAM 12
FAST ELEV. AT P 1

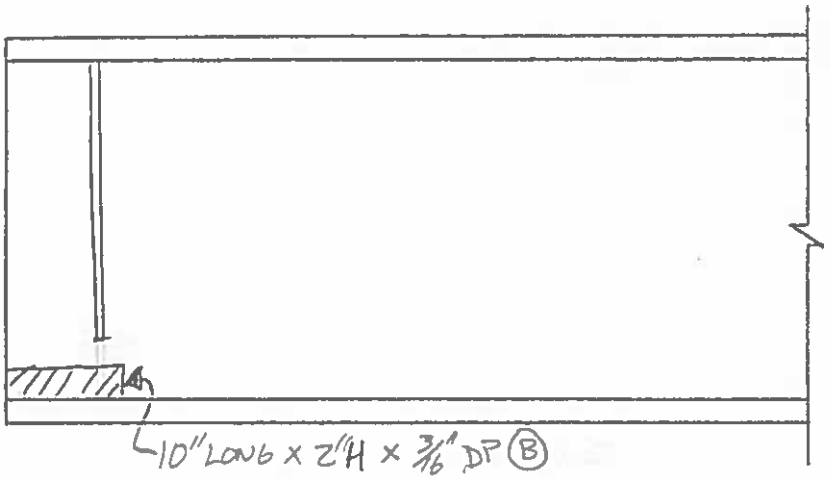

SPAN A, BEAM 12
WEST ELEV. AT P 1

REVISION	DATE	CREW	COMPANY	REVISION	DATE	CREW	COMPANY
1				3			
2				4			

Dewberry
59 Elm Street, Suite 101
New Haven, CT 06510

FIELD NOTES

JOB NO.

BRIDGE NO: 03014 A

DATE: 6/30/2014

SHEET OF

CREW: RFP, PHH

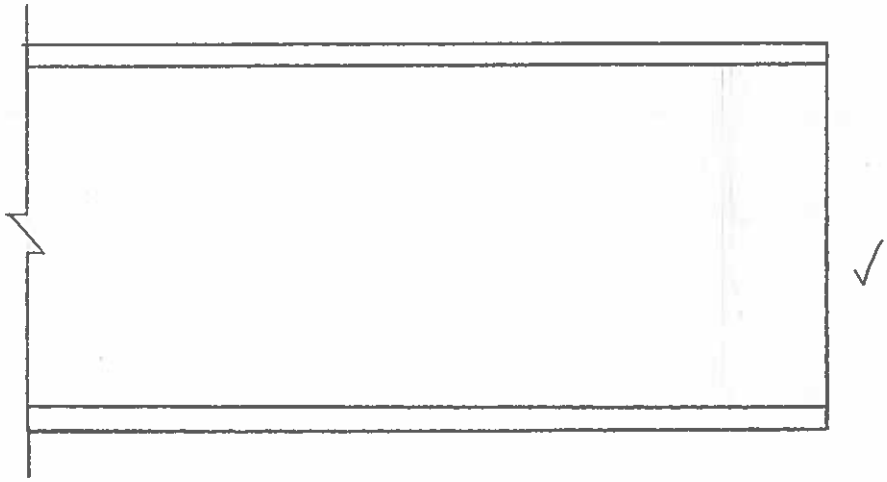

SPAN A, BEAM 13
EAST ELEV. AT P1

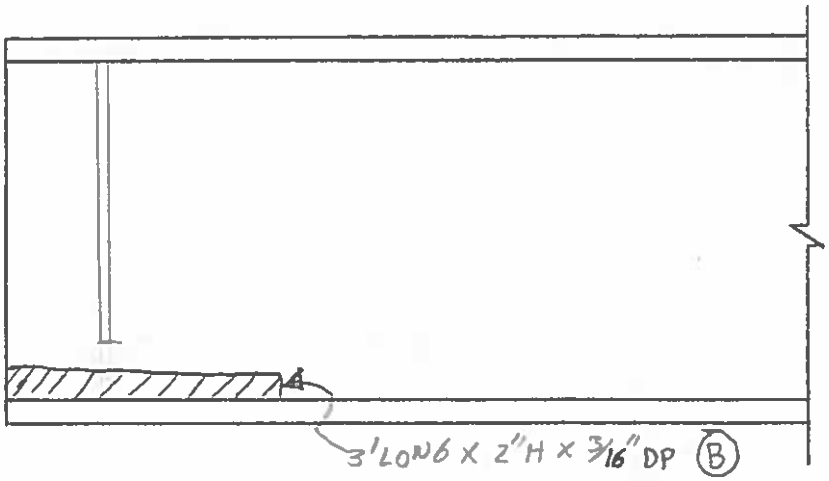

SPAN A, BEAM 13
WEST ELEV. AT P1

REVISION	DATE	CREW	COMPANY	REVISION	DATE	CREW	COMPANY
1				3			
2				4			

Dewberry	FIELD NOTES	JOB NO.	BRIDGE NO: 03014 A
59 Elm Street, Suite 101 New Haven, CT 06510		DATE: 7/8/14	SHEET OF
		CREW: RFP, PHH	

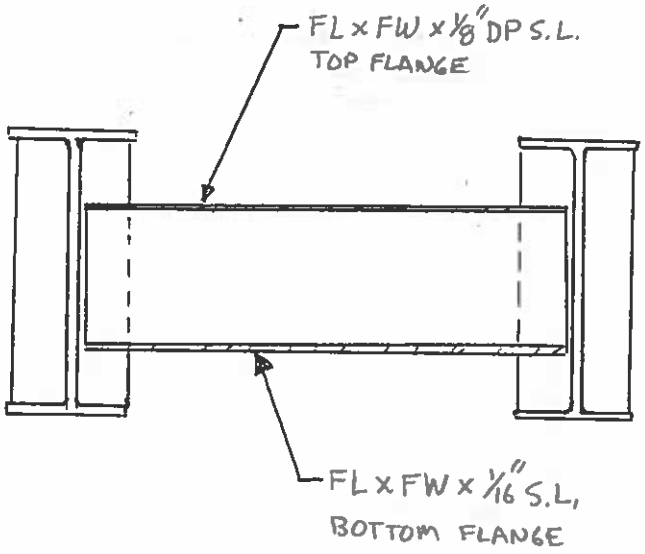

BAY 1 END DIAPHRAGM

SPAN A @ P1

REVISION 1	DATE	CREW	COMPANY	REVISION 3	DATE	CREW	COMPANY
REVISION 2	DATE	CREW	COMPANY	REVISION 4	DATE	CREW	COMPANY

Dewberry® 59 Elm Street, Suite 101 New Haven, CT 06510	FIELD NOTES	JOB NO.	BRIDGE NO: 03014 A
		DATE: 7/8/14	SHEET OF
		CREW: RFP, PHH	

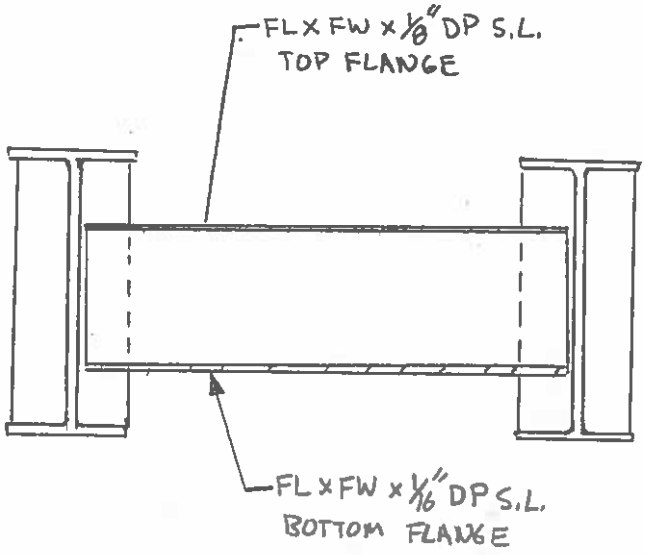

BAY 2 END DIAPHRAGM

SPAN A @ P1

REVISION 1	DATE	CREW	COMPANY	REVISION 3	DATE	CREW	COMPANY
REVISION 2	DATE	CREW	COMPANY	REVISION 4	DATE	CREW	COMPANY

Dewberry	FIELD NOTES	JOB NO.	BRIDGE NO: 03014A
59 Elm Street, Suite 101 New Haven, CT 06510		DATE: 7/8/14	SHEET OF
		CREW: RFP, PHH	

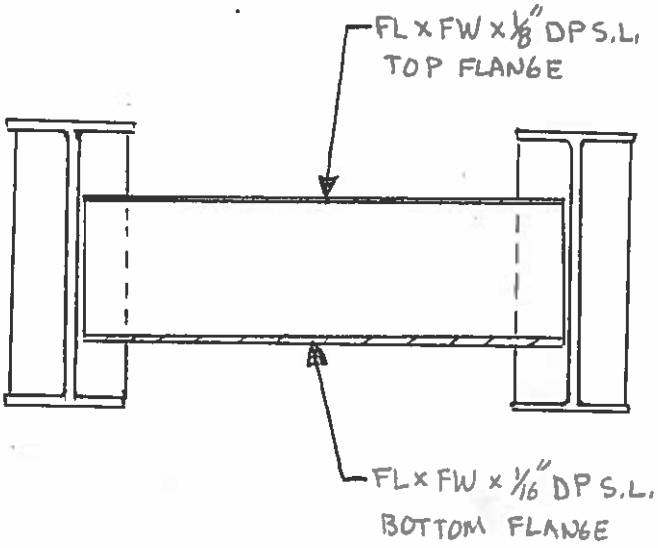

BAY 3 END DIAPHRAGM

SPAN A @ P1

REVISION 1	DATE	CREW	COMPANY	REVISION 3	DATE	CREW	COMPANY
REVISION 2	DATE	CREW	COMPANY	REVISION 4	DATE	CREW	COMPANY

Dewberry
59 Elm Street, Suite 101
New Haven, CT 06510

FIELD NOTES	JOB NO.	BRIDGE NO: 03014 A
	DATE: 7/8/14	SHEET OF
	CREW: RFP, PHH	

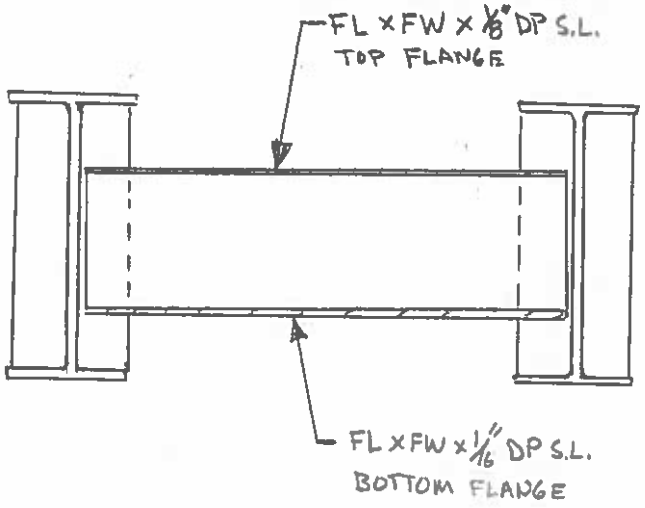

BAY 4 END DIAPHRAGM

SPAN A @ P1

REVISION 1	DATE	CREW	COMPANY	REVISION 3	DATE	CREW	COMPANY
REVISION 2	DATE	CREW	COMPANY	REVISION 4	DATE	CREW	COMPANY

Dewberry	FIELD NOTES	JOB NO.	BRIDGE NO: 03014 A
59 Elm Street, Suite 101 New Haven, CT 06510		DATE: 7/8/14	SHEET OF
		CREW: RFP, PNH	

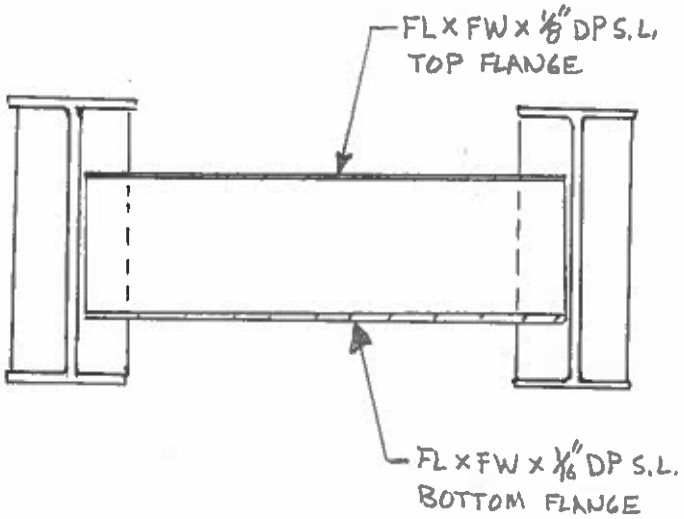

BAY 6 END DIAPHAGM

SPAN A @ P1

REVISION 1	DATE	CREW	COMPANY	REVISION 3	DATE	CREW	COMPANY
REVISION 2	DATE	CREW	COMPANY	REVISION 4	DATE	CREW	COMPANY

SPAN B

FIELD NOTES

PREPARED BY: Garg Consulting Services, Inc.

PROJ. NO. 170-3013 | BRIDGE NO. 3014A

DATE: 11/02/2010 | SHEET 4 of 5

CREW: CL, MD, SN

Revision	Date	Crew	Company
1	9/8/12	DKG, AKC	Garg
2	6/30/14 & 7/8/14	RFP, PHH	DEW

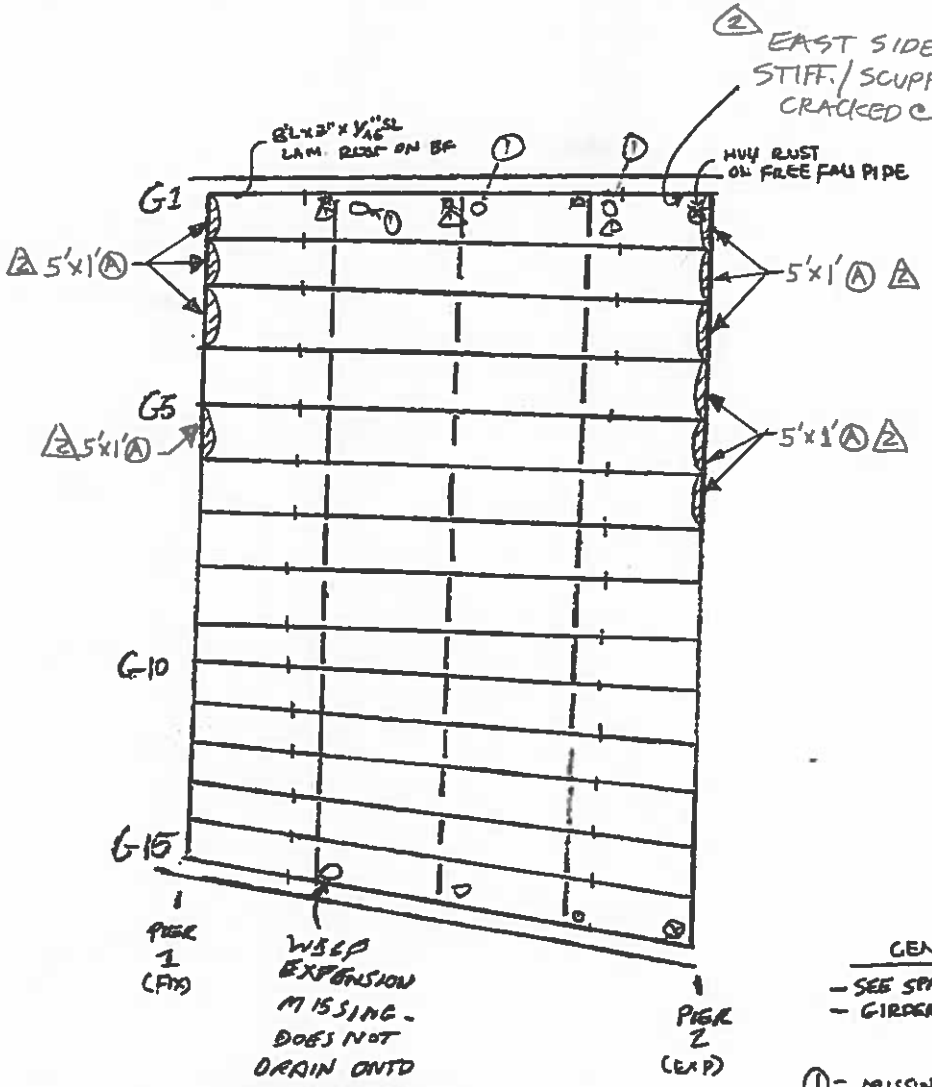

Ⓐ - SCUPPER FREEFALL
O - WEEP
+ - BOTTOM FLANGE COV. PLATE ENDS CHECKED 100% HANDS ON.

LEGEND

- HOLLOW AREA
- SHALLOW REBAR
- SPALL AREA
- SPALL AREA WITH EXPOSED REBAR
- MAP CRACKS OR HAIRLINE MAP CRACKS
- HAIRLINE CRACKS (HLC) OR CRACKS (CR)
- HONEY COMB AREA
- SCALE AREA (HVY, MED, OR LT)

GENERAL NOTES

- SEE SPAN A GENERAL NOTES
- GIRDER 1 HAS ZERO CAMBER

1 = MISSING WEEP PIPE (NOT DRAINING ON STEEL)

FRAMING PLAN SPAN B

2 SEE DETAIL SHEETS FOR MORE INFORMATION

Dewberry
59 Elm Street, Suite 101
New Haven, CT 06510

FIELD NOTES	JOB NO.	BRIDGE NO: 03014 A
	DATE: 7/8/14	SHEET OF
	CREW: RFP, PHH	

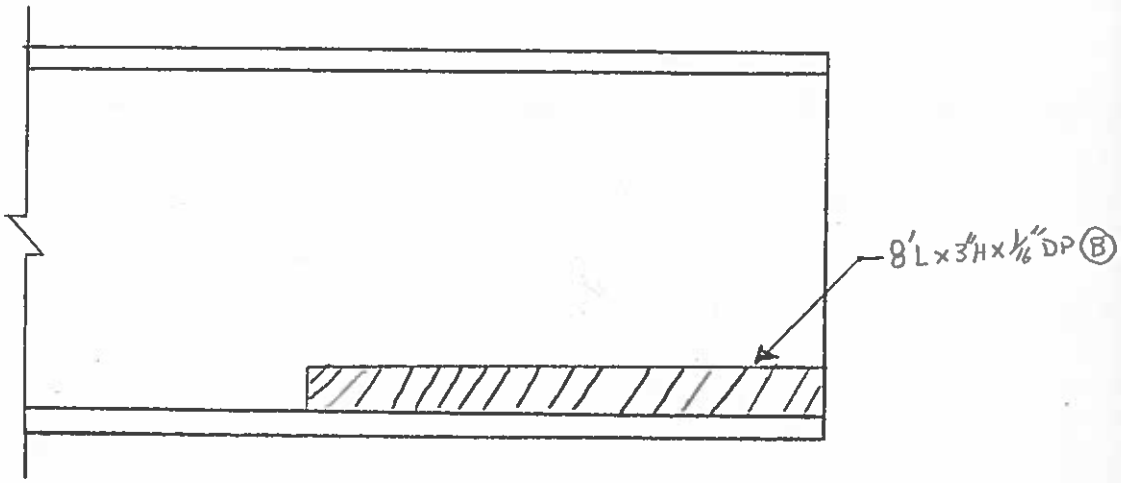

SPAN B, BEAM 1
WEST ELEV. AT P1

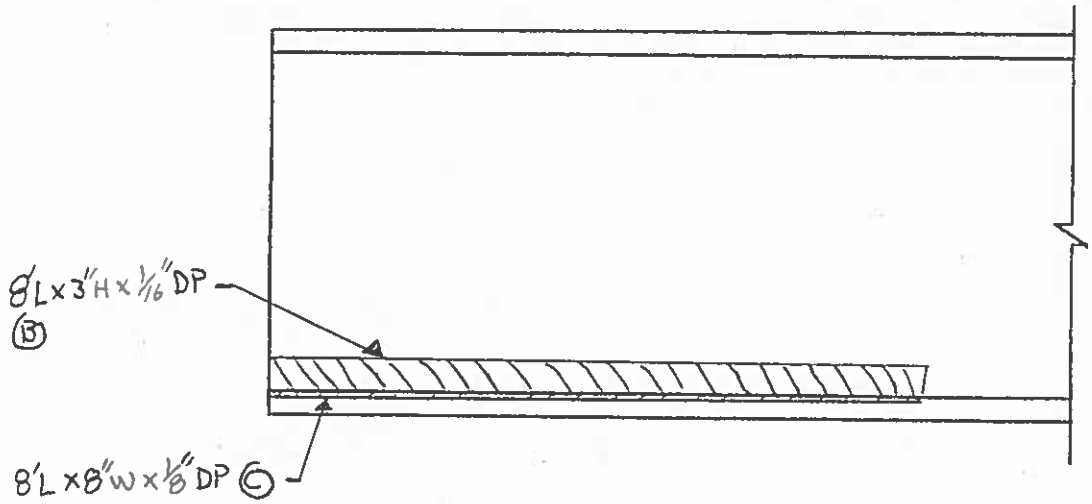

SPAN B, BEAM 1
EAST ELEV. AT P1

REVISION 1	DATE	CREW	COMPANY	REVISION 3	DATE	CREW	COMPANY
REVISION 2	DATE	CREW	COMPANY	REVISION 4	DATE	CREW	COMPANY

Dewberry	FIELD NOTES	JOB NO.	BRIDGE NO: 03014 A
59 Elm Street, Suite 101 New Haven, CT 06510		DATE: 7/8/2014	SHEET OF
		CREW: RFP, PHH	

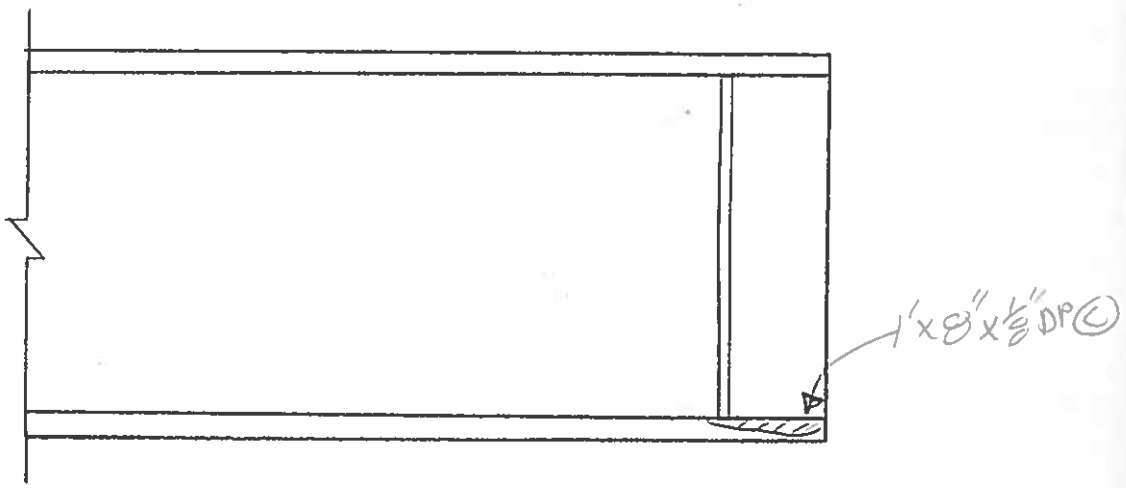

SPAN B, BEAM 2
WEST ELEV. AT P1

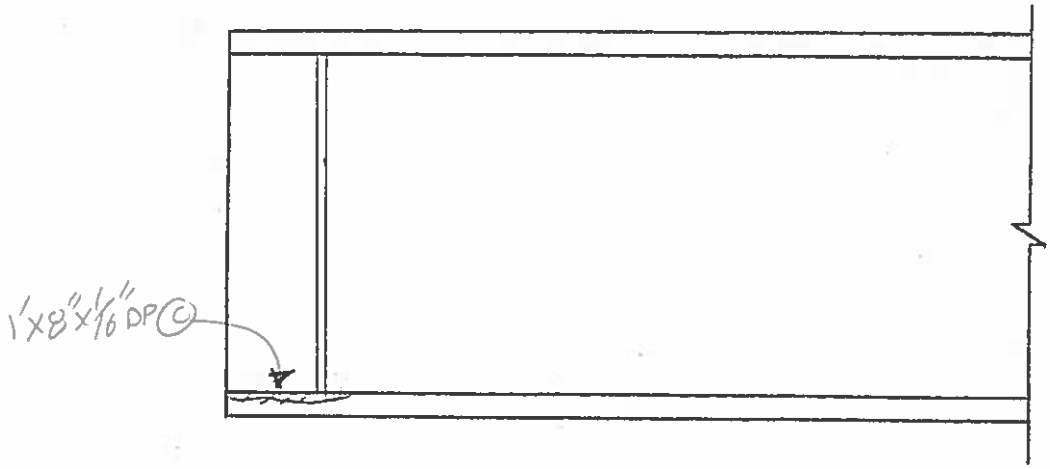

SPAN B, BEAM 2
EAST ELEV. AT P1

REVISION	DATE	CREW	COMPANY	REVISION	DATE	CREW	COMPANY
1				3			
2				4			

Dewberry® 59 Elm Street, Suite 101 New Haven, CT 06510	FIELD NOTES	JOB NO.	BRIDGE NO: 03014A
		DATE: 7/8/2014	SHEET OF
		CREW: RFP, PHH	

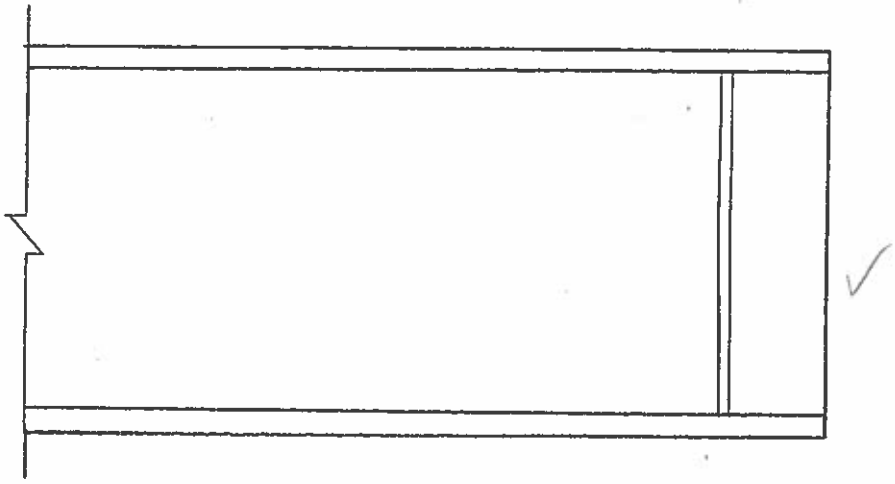

SPAN B, BEAM 3
WEST ELEV. AT P1

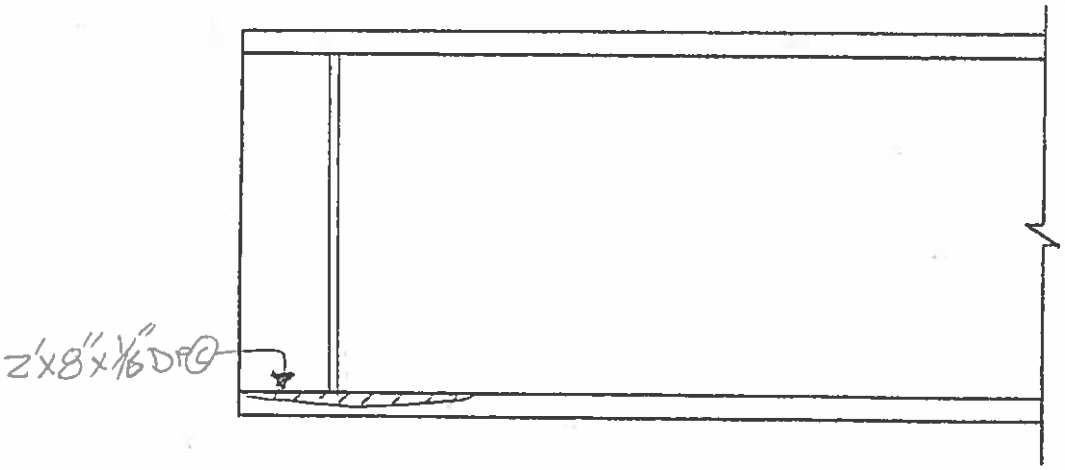

SPAN B, BEAM 3
EAST ELEV. AT P1

REVISION 1	DATE	CREW	COMPANY	REVISION 3	DATE	CREW	COMPANY
REVISION 2	DATE	CREW	COMPANY	REVISION 4	DATE	CREW	COMPANY

Dewberry
59 Elm Street, Suite 101
New Haven, CT 06510

FIELD NOTES	JOB NO.	BRIDGE NO: 03014 A
	DATE: 7/8/2014	SHEET OF
	CREW: RFP, PHH	

* TOP OF WEB TIPPED 1/4" WEST OVER 2'

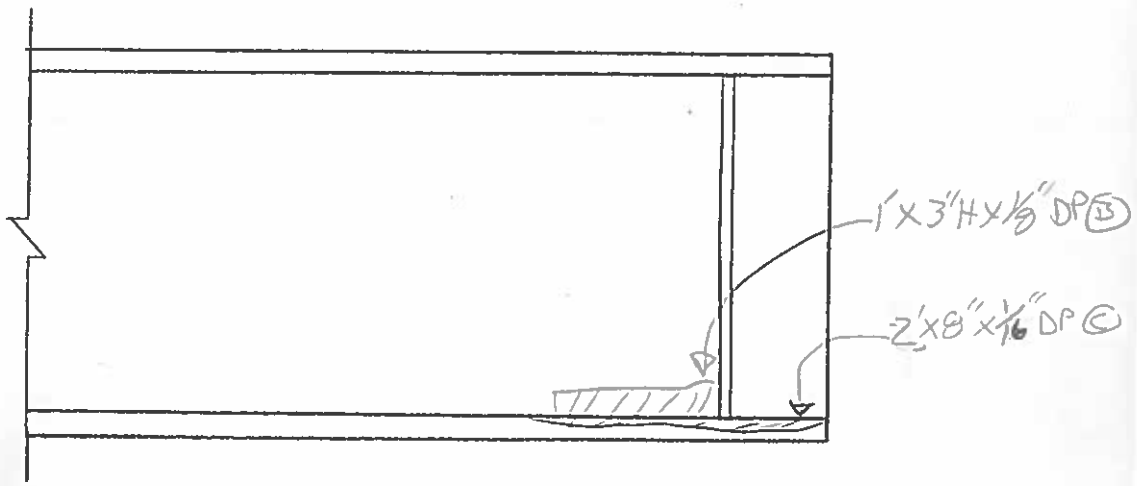

SPAN B, BEAM 4
WEST ELEV. AT P1

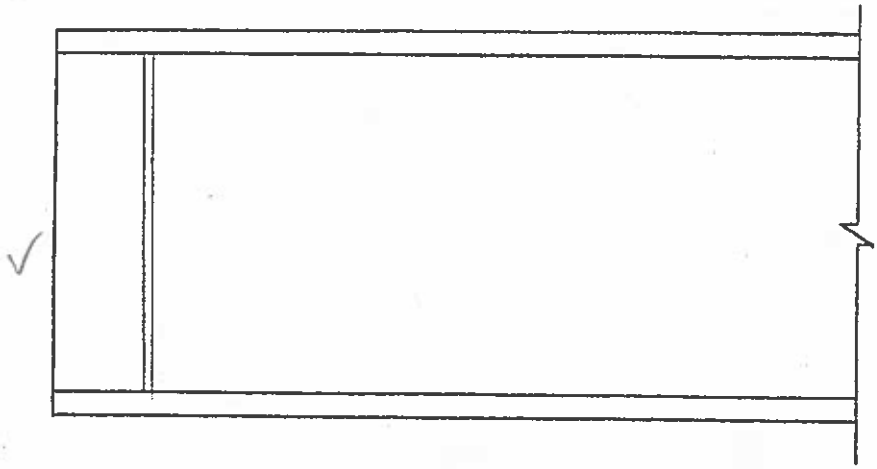

SPAN B, BEAM 4
EAST ELEV. AT P1

REVISION 1	DATE	CREW	COMPANY	REVISION 3	DATE	CREW	COMPANY
REVISION 2	DATE	CREW	COMPANY	REVISION 4	DATE	CREW	COMPANY

Dewberry
59 Elm Street, Suite 101
New Haven, CT 06510

FIELD NOTES

JOB NO.

BRIDGE NO: 03014 A

DATE: 7/9/2014

SHEET OF

CREW: RFP, PHH

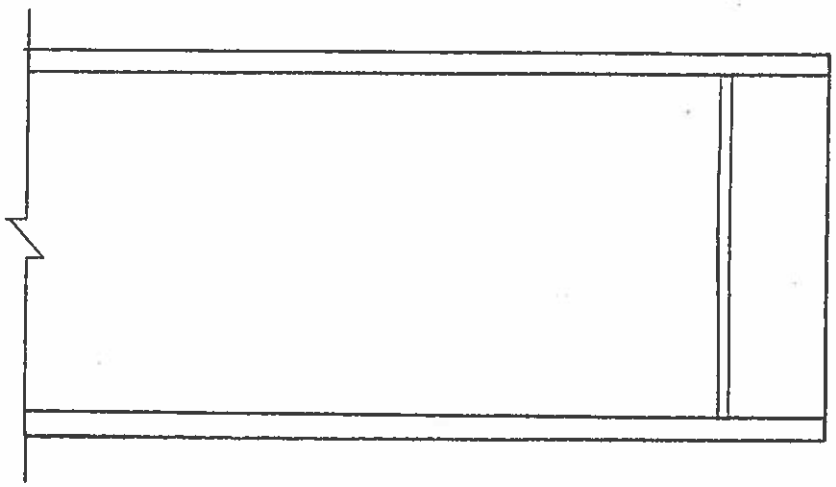

SPAN B, BEAM 5
WEST ELEV. AT P1

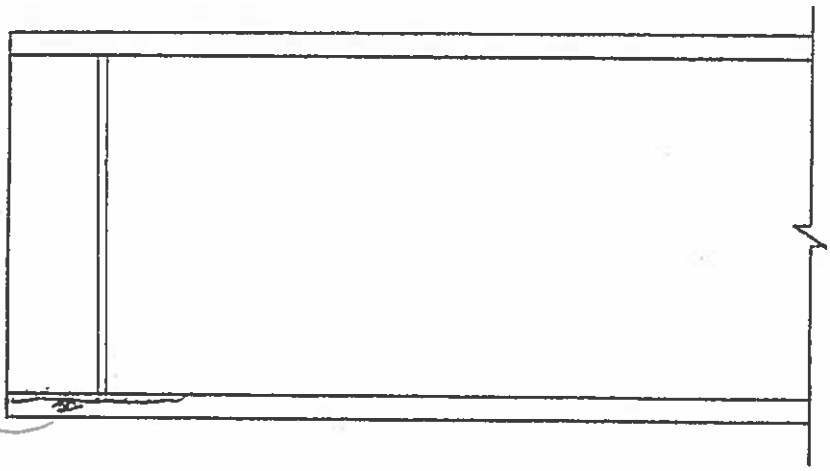

2x8"x½" DP (C)

SPAN B, BEAM 5
EAST ELEV. AT P1

REVISION	DATE	CREW	COMPANY	REVISION	DATE	CREW	COMPANY
1				3			
2				4			

Dewberry

59 Elm Street, Suite 101
New Haven, CT 06510

FIELD NOTES

JOB NO.

BRIDGE NO: 03014 A

DATE: 7/8/2014

SHEET OF

CREW: RFP, PHH

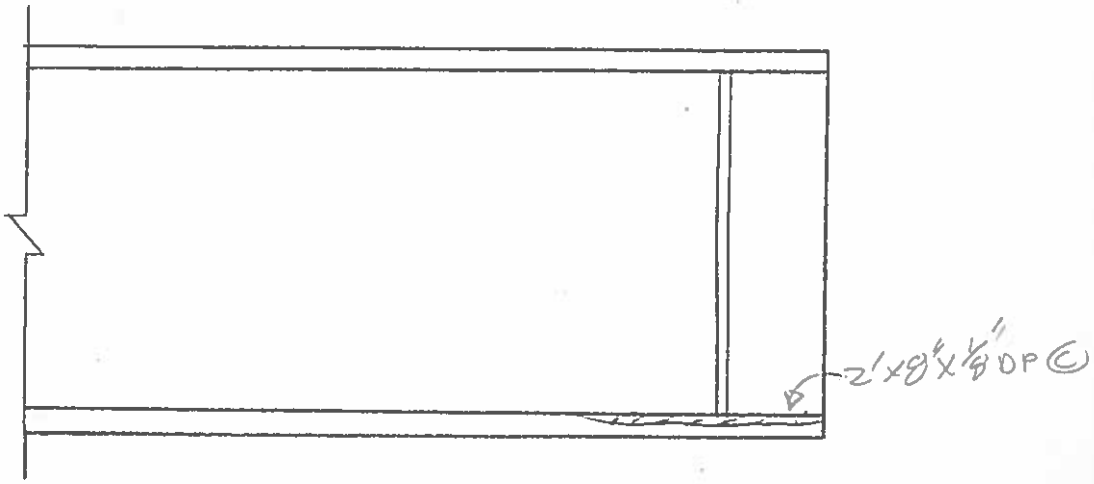

SPAN B, BEAM 6
WEST ELEV. AT P1

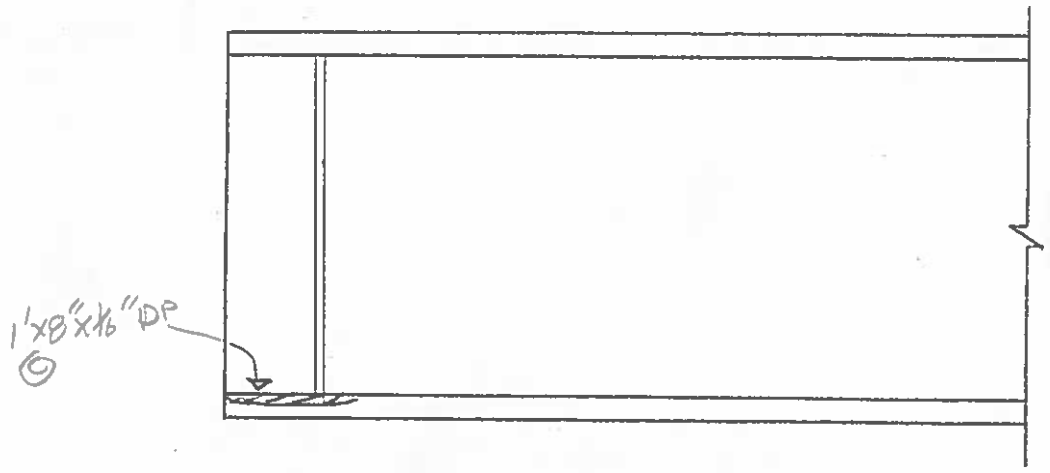

SPAN B, BEAM 6
EAST ELEV. AT P1

REVISION 1	DATE	CREW	COMPANY	REVISION 3	DATE	CREW	COMPANY
REVISION 2	DATE	CREW	COMPANY	REVISION 4	DATE	CREW	COMPANY

Dewberry® 59 Elm Street, Suite 101 New Haven, CT 06510	FIELD NOTES	JOB NO.	BRIDGE NO: 03014 A
		DATE: 6/30/2014	SHEET OF
		CREW: RFP, PHH	

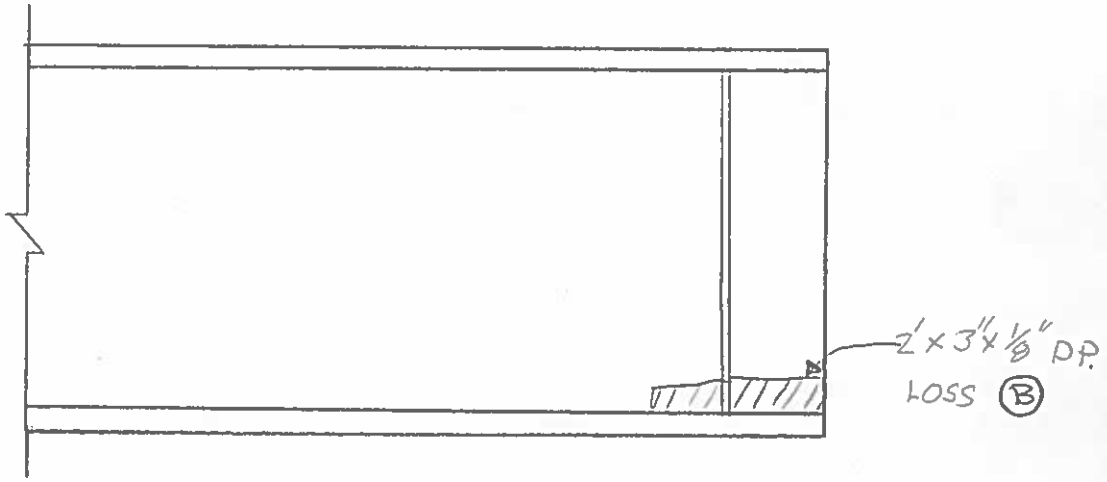

SPAN B, BEAM 7
WEST ELEV. AT P 1

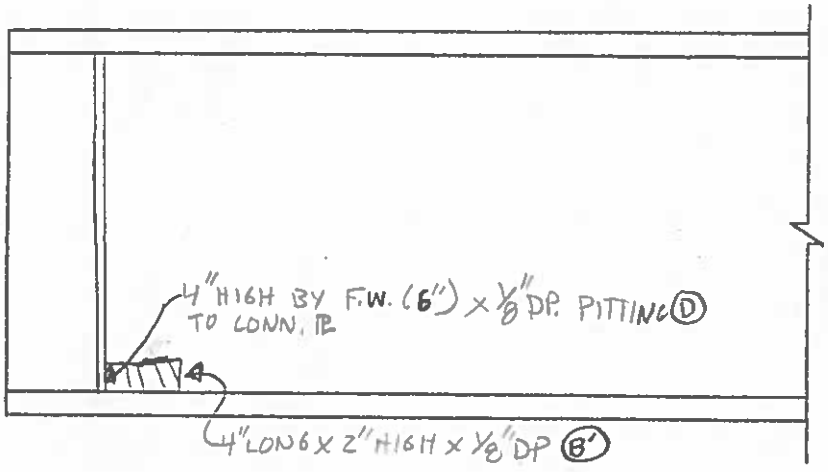

SPAN B, BEAM 7
EAST ELEV. AT P1

REVISION 1	DATE	CREW	COMPANY	REVISION 3	DATE	CREW	COMPANY
REVISION 2	DATE	CREW	COMPANY	REVISION 4	DATE	CREW	COMPANY

Dewberry	FIELD NOTES	JOB NO.	BRIDGE NO: 03014 A
59 Elm Street, Suite 101 New Haven, CT 06510		DATE: 6/30/2014	SHEET OF
		CREW: RAP, PHH	

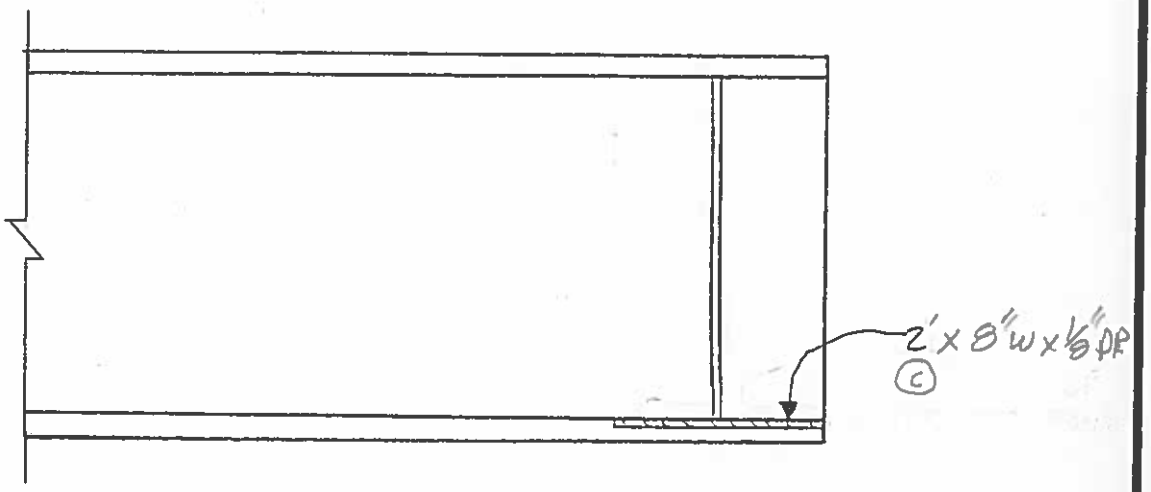

SPAN B, BEAM 8
WEST ELEV. AT P1

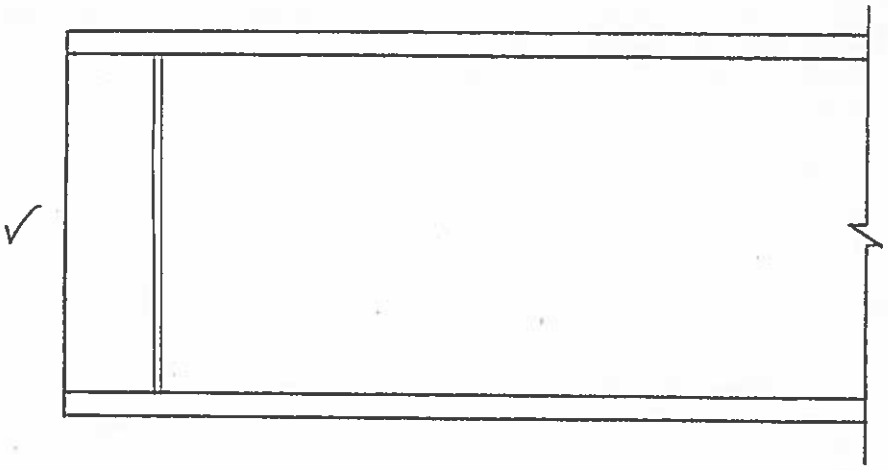

SPAN B, BEAM 8
EAST ELEV. AT P1

REVISION 1	DATE	CREW	COMPANY	REVISION 3	DATE	CREW	COMPANY
REVISION 2	DATE	CREW	COMPANY	REVISION 4	DATE	CREW	COMPANY

Dewberry®
59 Elm Street, Suite 101
New Haven, CT 06510

FIELD NOTES

JOB NO.

BRIDGE NO: 03014 A

DATE: 6/30/2014

SHEET OF

CREW: RFP, PHH

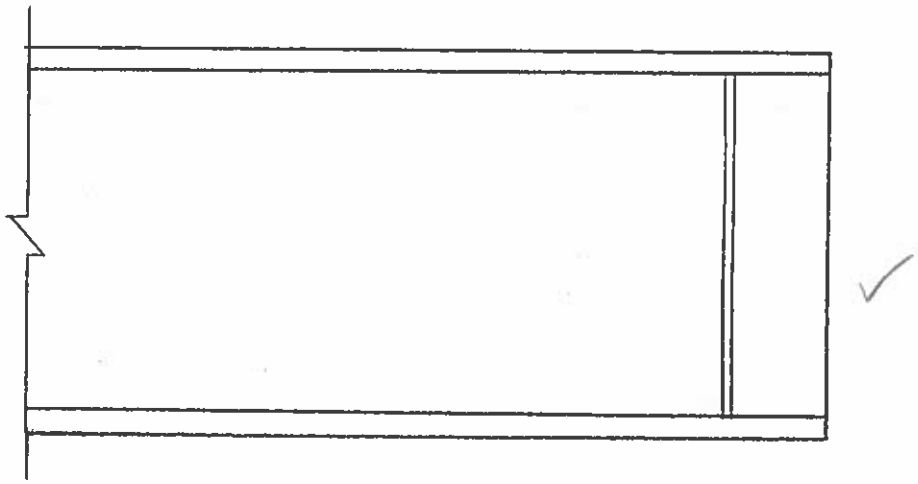

SPAN B, BEAM 9
WEST ELEV. AT P 1

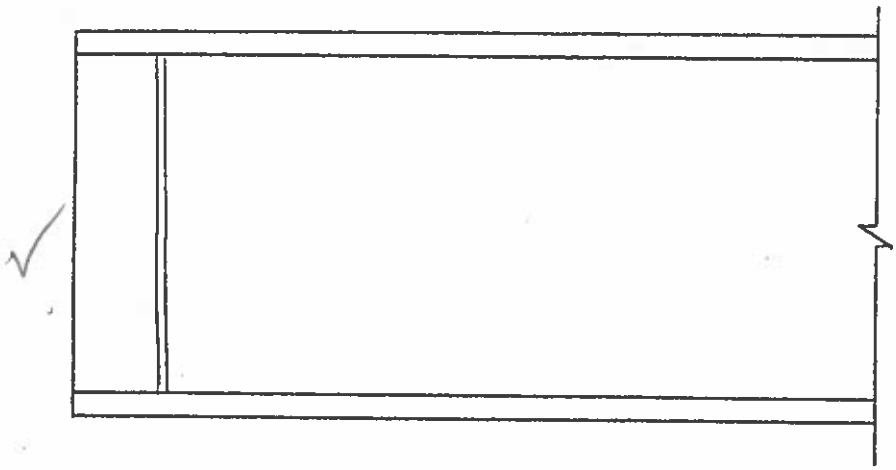

SPAN B, BEAM 9
EAST ELEV. AT P 1

REVISION	DATE	CREW	COMPANY	REVISION	DATE	CREW	COMPANY
1				3			
2				4			

Dewberry® 59 Elm Street, Suite 101 New Haven, CT 06510	FIELD NOTES	JOB NO.	BRIDGE NO: 03014 A
		DATE: 6/30/2014	SHEET OF
		CREW: RFP, PHA	

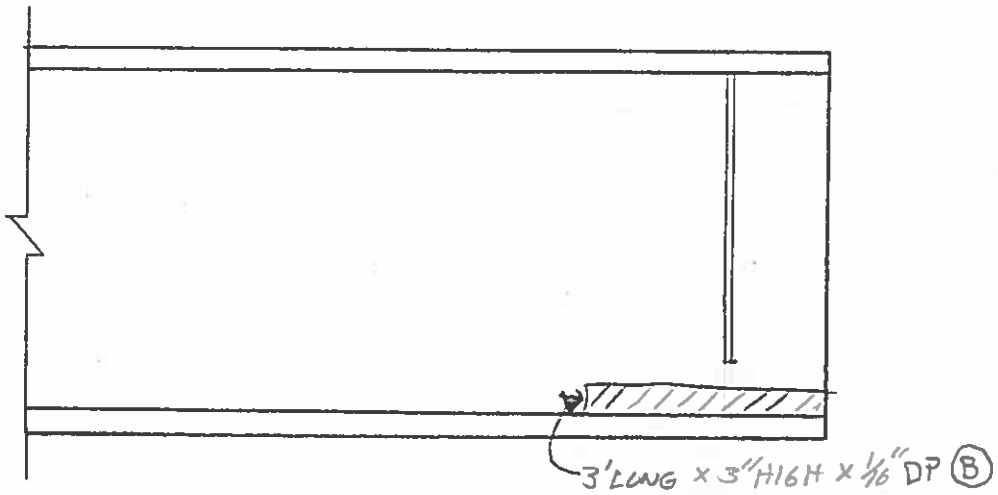

SPAN B, BEAM 10
WEST ELEV. AT P1

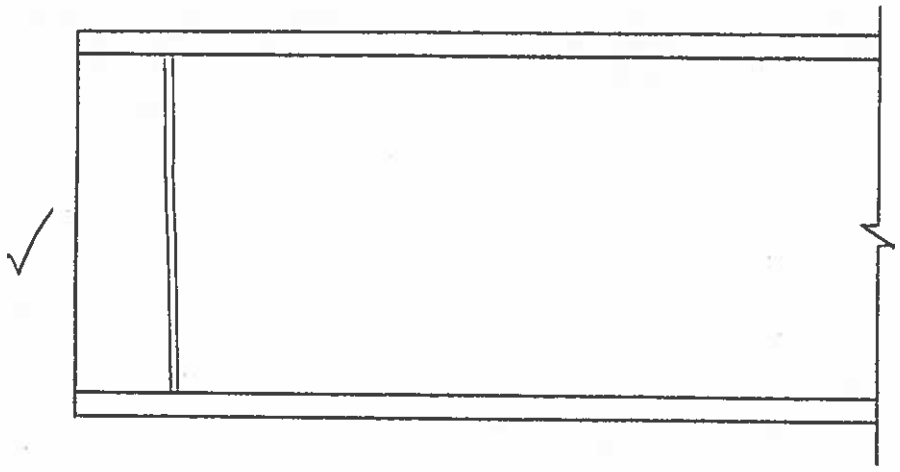

SPAN B, BEAM 10
EAST ELEV. AT P1

REVISION 1	DATE	CREW	COMPANY	REVISION 3	DATE	CREW	COMPANY
REVISION 2	DATE	CREW	COMPANY	REVISION 4	DATE	CREW	COMPANY

Dewberry® 59 Elm Street, Suite 101 New Haven, CT 06510	FIELD NOTES	JOB NO.	BRIDGE NO: 03014 A
		DATE: 6/30/2014	SHEET OF
		CREW: RFP, PHH	

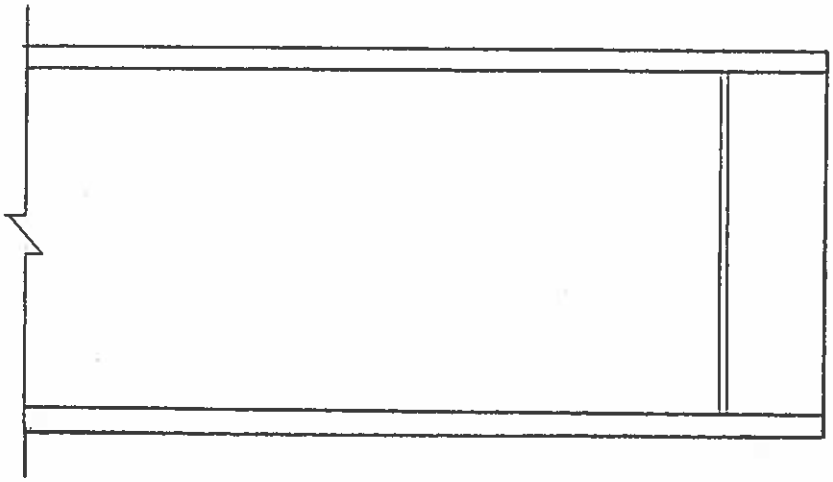

SPAN B, BEAM 17
EAST ELEV. AT P1

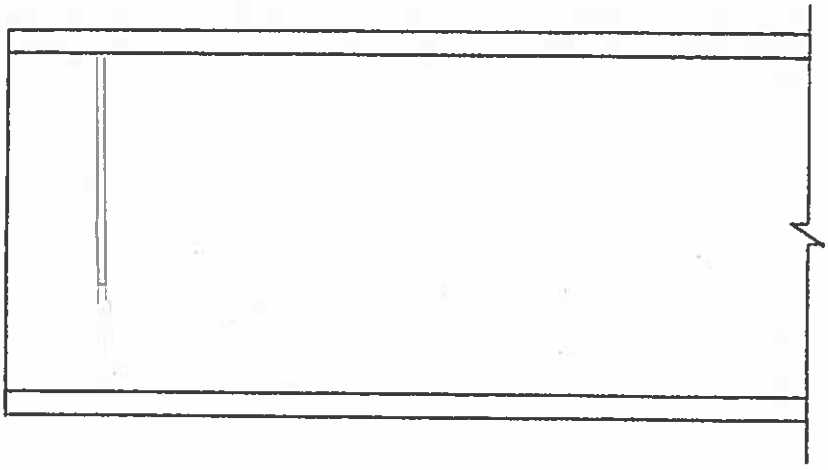

SPAN B, BEAM 11
WEST ELEV. AT P1

REVISION 1	DATE	CREW	COMPANY	REVISION 3	DATE	CREW	COMPANY
REVISION 2	DATE	CREW	COMPANY	REVISION 4	DATE	CREW	COMPANY

Dewberry
59 Elm Street, Suite 101
New Haven, CT 06510

FIELD NOTES

JOB NO.

BRIDGE NO: 03014 A

DATE: 6/30/2014

SHEET OF

CREW: RFP, PHH

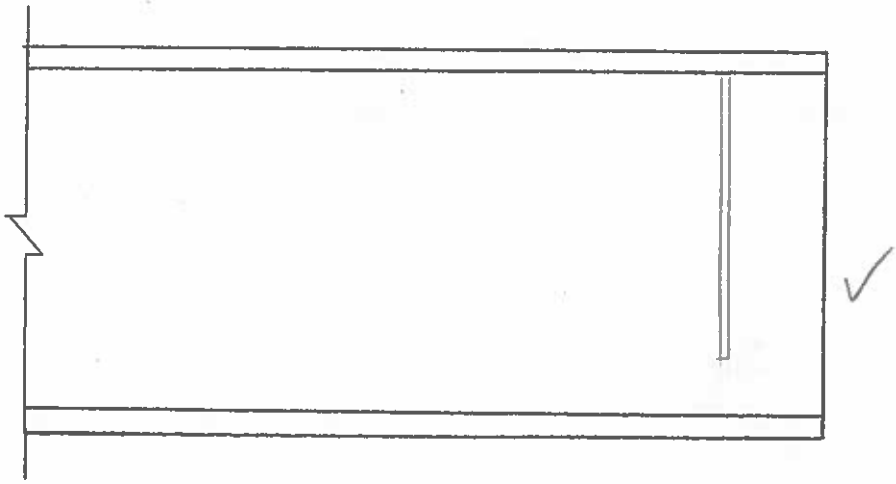

SPAN B, BEAM 12
WEST ELEV. AT P1

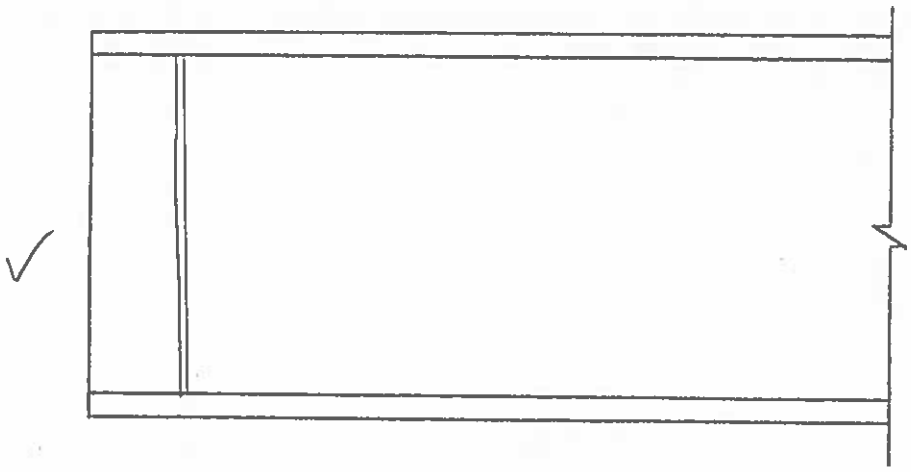

SPAN B, BEAM 12
EAST ELEV. AT P1

REVISION	DATE	CREW	COMPANY	REVISION	DATE	CREW	COMPANY
REVISION 2	DATE	CREW	COMPANY	REVISION 4	DATE	CREW	COMPANY

Dewberry®	FIELD NOTES	JOB NO.	BRIDGE NO: 03014 A
59 Elm Street, Suite 101 New Haven, CT 06510		DATE: 6/30/2014	SHEET OF
		CREW: RFP, PHH	

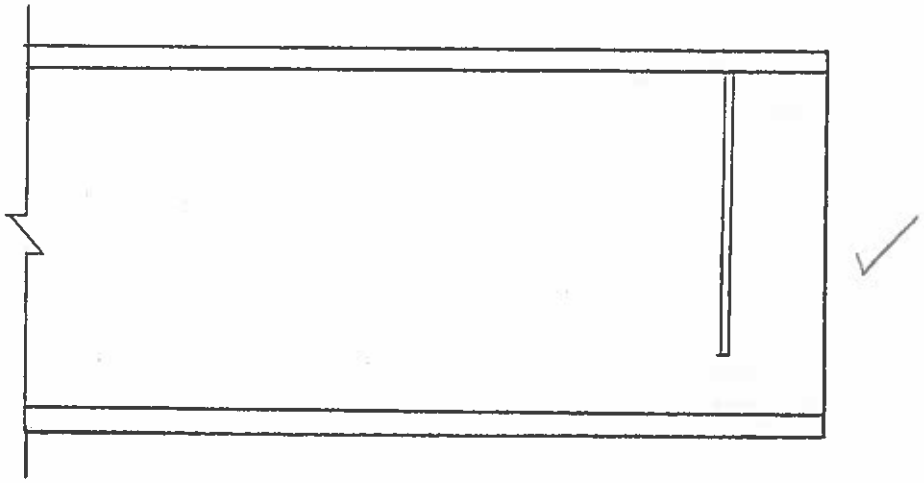

SPAN B, BEAM 13
WEST ELEV. AT P1

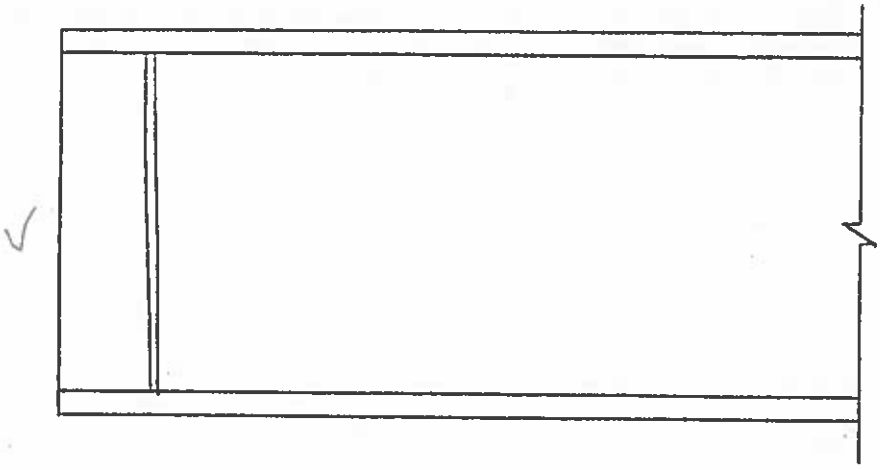

SPAN B, BEAM 13
EAST ELEV. AT P1

REVISION	DATE	CREW	COMPANY	REVISION	DATE	CREW	COMPANY
1				3			
2				4			

Dewberry® 59 Elm Street, Suite 101 New Haven, CT 06510	FIELD NOTES	JOB NO.	BRIDGE NO: 03014 A
		DATE: 6/30/2014	SHEET OF
		CREW: RFP, PHH	

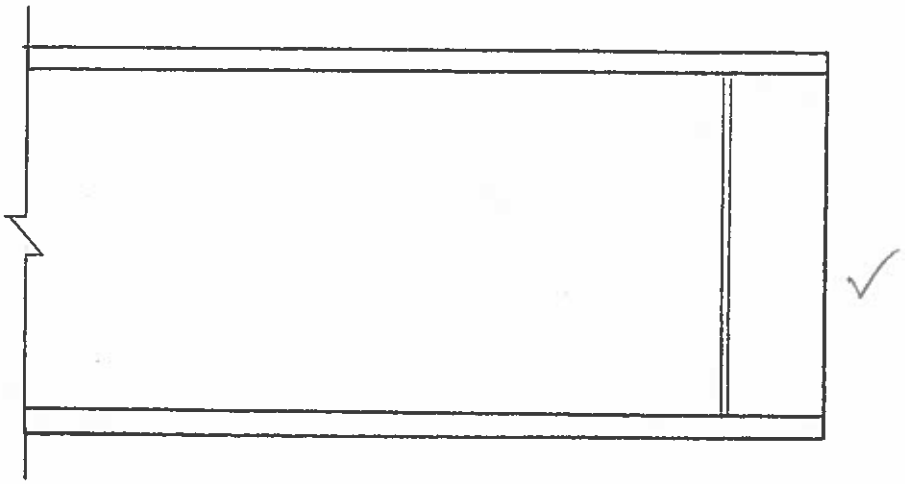

SPAN B, BEAM 14
WEST ELEV. AT P 1

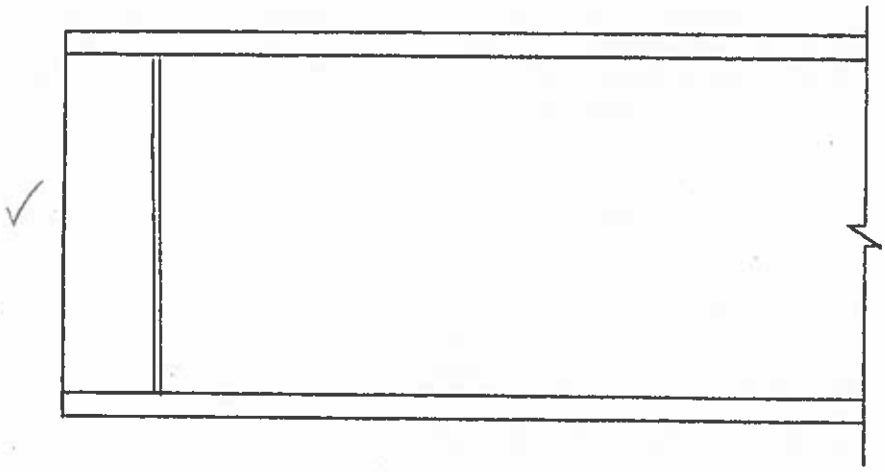

SPAN B, BEAM 14
EAST ELEV. AT P 1

REVISION	DATE	CREW	COMPANY	REVISION	DATE	CREW	COMPANY
1				3			
2				4			

Dewberry® 59 Elm Street, Suite 101 New Haven, CT 06510	FIELD NOTES	JOB NO.	BRIDGE NO: 03014 A
		DATE: 6/30/2016	SHEET OF
		CREW: RFP, PHH	

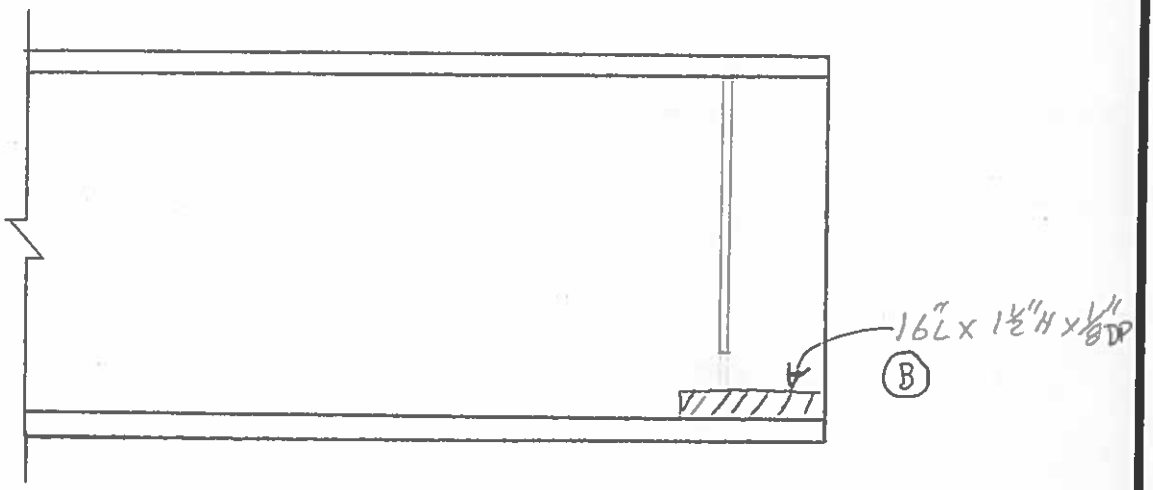

SPAN B, BEAM 15
WEST ELEV. AT P1

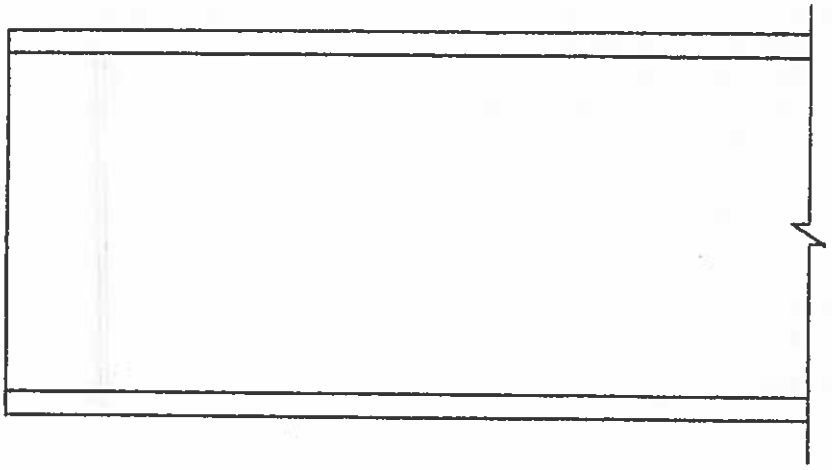

SPAN B, BEAM 15
EAST ELEV. AT P1

REVISION	DATE	CREW	COMPANY	REVISION	DATE	CREW	COMPANY
1				3			
2				4			

Dewberry® 59 Elm Street, Suite 101 New Haven, CT 06510	FIELD NOTES	JOB NO.	BRIDGE NO: 03014 A
		DATE: 7/8/2014	SHEET OF
		CREW: RFP, PHH	

• WEB BOWED 3/16" OVER 2'

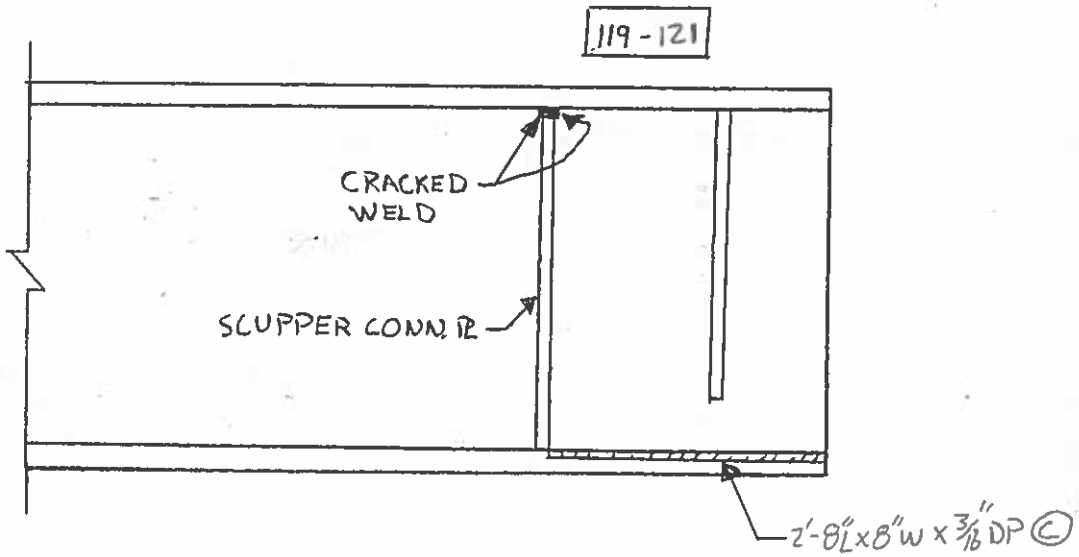

SPAN B, BEAM 1
EAST ELEV. AT P2

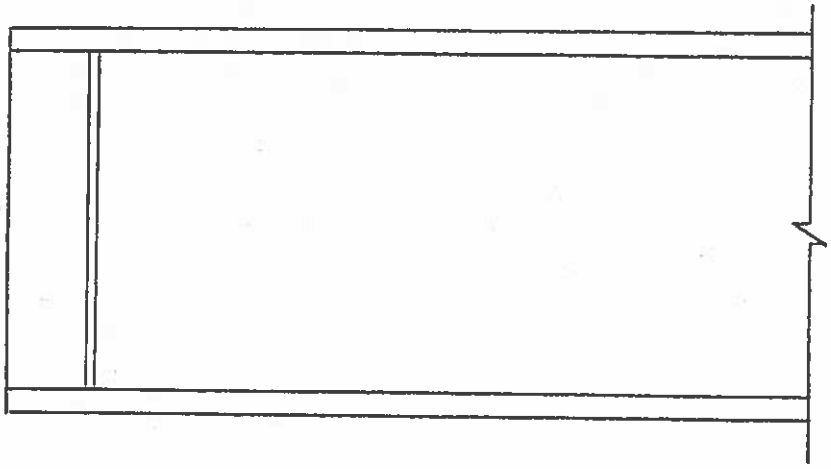

SPAN B, BEAM 1
WEST ELEV. AT P2

REVISION 1	DATE	CREW	COMPANY	REVISION 3	DATE	CREW	COMPANY
REVISION 2	DATE	CREW	COMPANY	REVISION 4	DATE	CREW	COMPANY

Dewberry
59 Elm Street, Suite 101
New Haven, CT 06510

FIELD NOTES

JOB NO.

BRIDGE NO: 03014A

DATE: 7/9/2014

SHEET OF

CREW: RFP, PHH

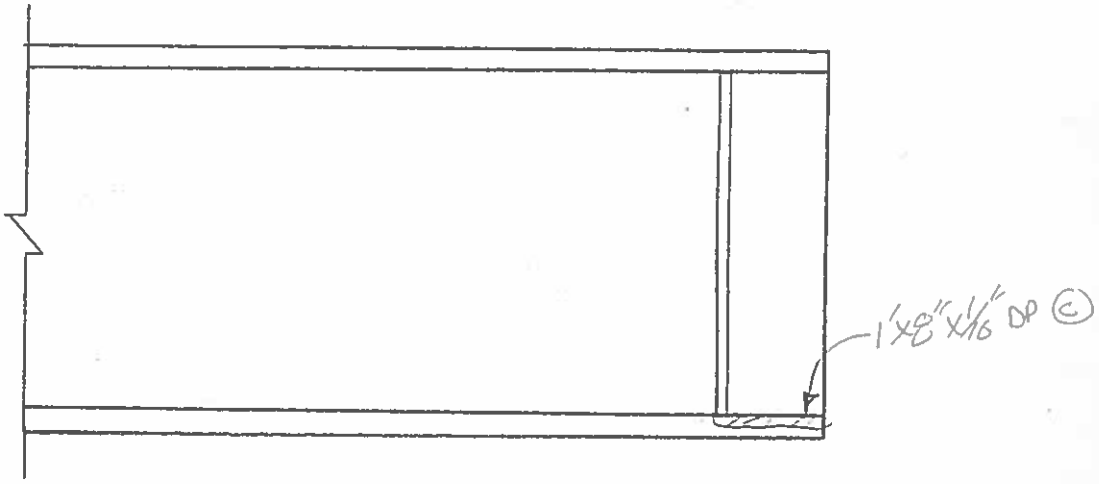

SPAN B, BEAM 2
EAST ELEV. AT P2

- TOP OF WEB TIPPED 1/8" WEST OVER 2'

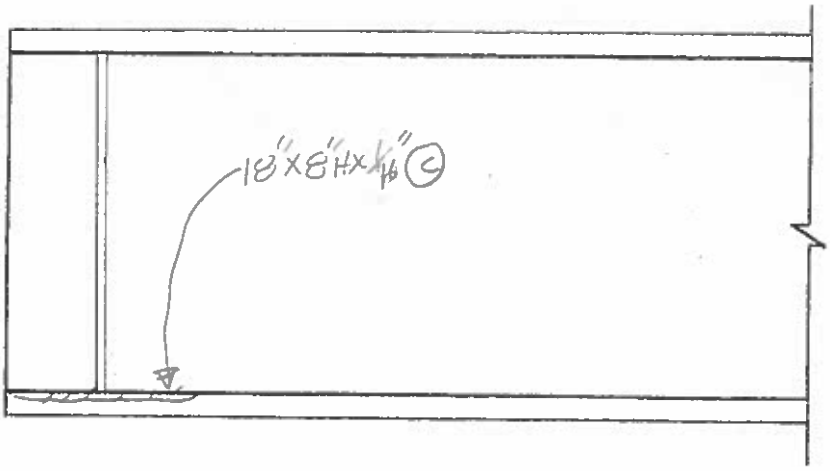

SPAN B, BEAM 2
WEST ELEV. AT P2

REVISION	DATE	CREW	COMPANY	REVISION	DATE	CREW	COMPANY
1				3			
2				4			

Dewberry®	FIELD NOTES	JOB NO.	BRIDGE NO: 03014 A
59 Elm Street, Suite 101 New Haven, CT 06510		DATE: 7/8/2014	SHEET OF
		CREW: RFP, PHH	

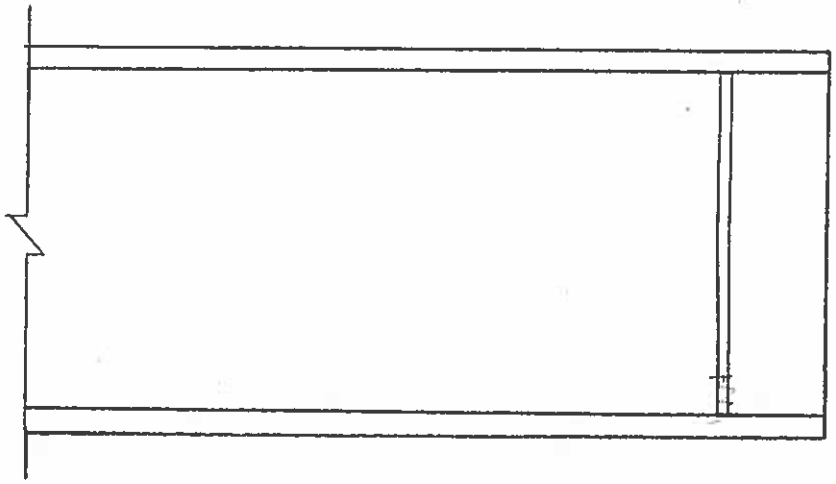

SPAN 13, BEAM 3
EAST ELEV. AT P2

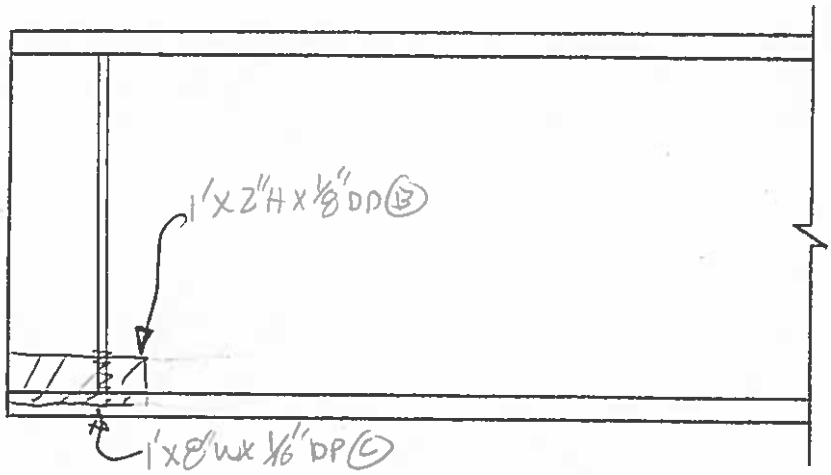

SPAN 13, BEAM 3
WEST ELEV. AT P2

REVISION 1	DATE	CREW	COMPANY	REVISION 3	DATE	CREW	COMPANY
REVISION 2	DATE	CREW	COMPANY	REVISION 4	DATE	CREW	COMPANY

Dewberry
59 Elm Street, Suite 101
New Haven, CT 06510

FIELD NOTES

JOB NO.

BRIDGE NO: 03014 A

DATE: 7/16/24

SHEET OF

CREW: RFP, PHH

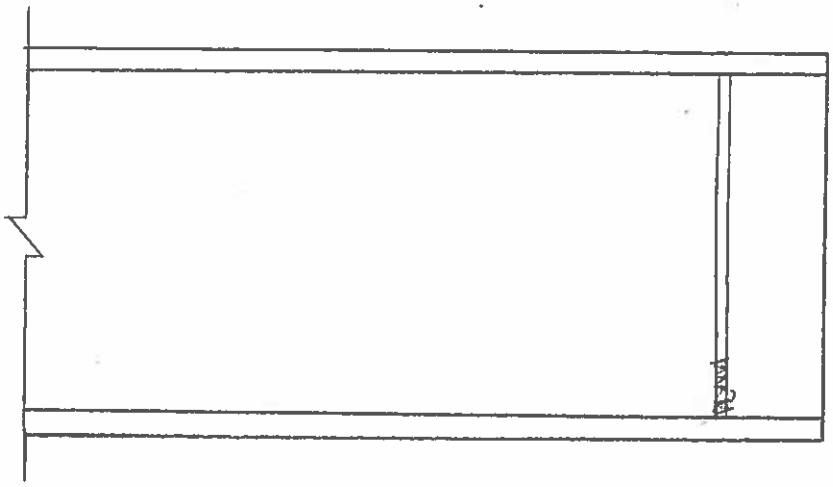

SPAN B, BEAM 4
EAST ELEV. AT P2

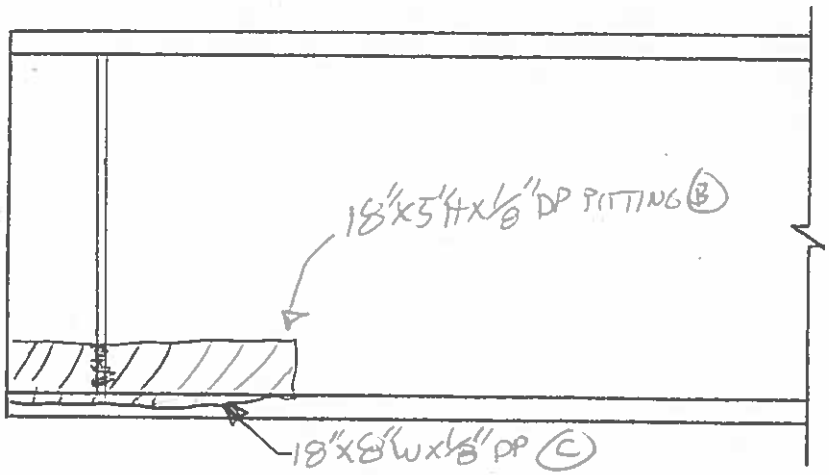

SPAN B, BEAM 4
WEST ELEV. AT P2

REVISION	DATE	CREW	COMPANY	REVISION	DATE	CREW	COMPANY
1				3			
2				4			

Dewberry
59 Elm Street, Suite 101
New Haven, CT 06510

FIELD NOTES

JOB NO.

BRIDGE NO: 03014 A

DATE: 7/8/2014

SHEET OF

CREW: RFP, PHH

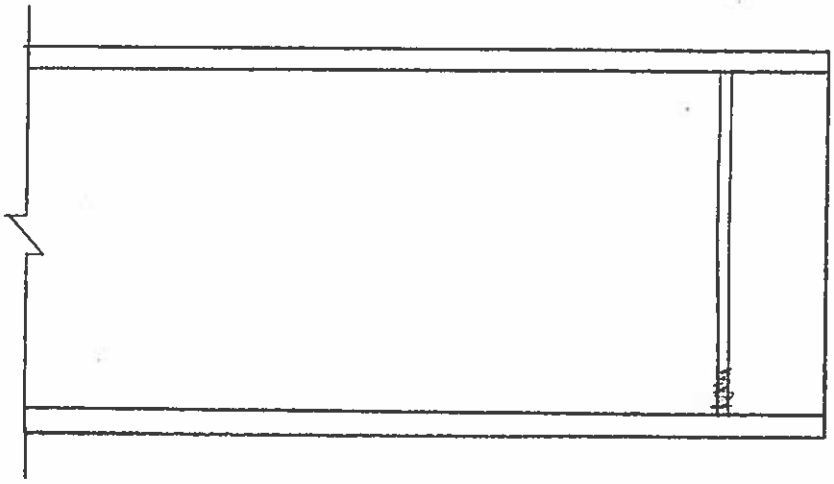

• NO SECTION LOSS

SPAN B, BEAM 5
EAST ELEV. AT P2

• TOP OF WEB TIPPED EAST 1/4" OVER 2'

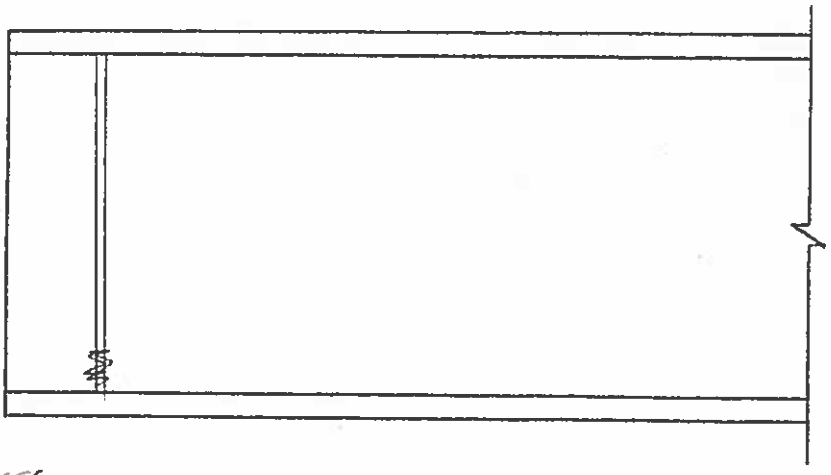

• NO SECTION LOSS

SPAN B, BEAM 5
WEST ELEV. AT P2

REVISION	DATE	CREW	COMPANY	REVISION	DATE	CREW	COMPANY
1				3			
2				4			

Dewberry
59 Elm Street, Suite 101
New Haven, CT 06510

FIELD NOTES

JOB NO.

BRIDGE NO: 03014 A

DATE: 7/8/2014

SHEET OF

CREW: RFP, PHN

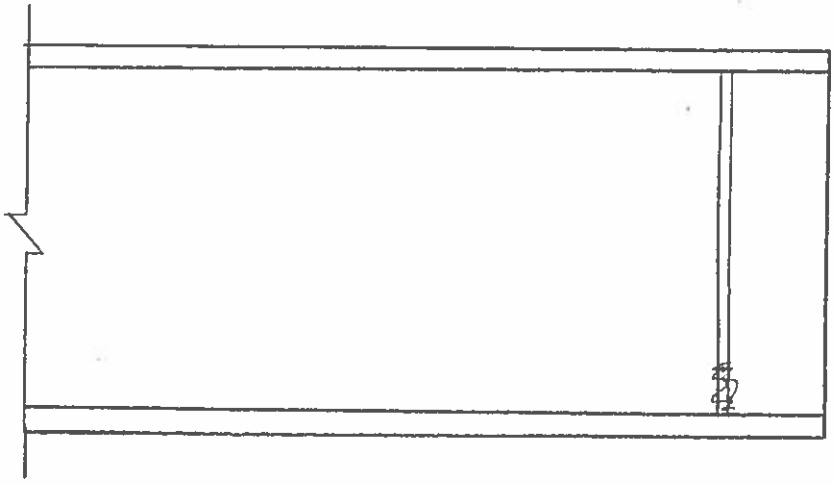

SPAN B, BEAM 6
EAST ELEV. AT P2

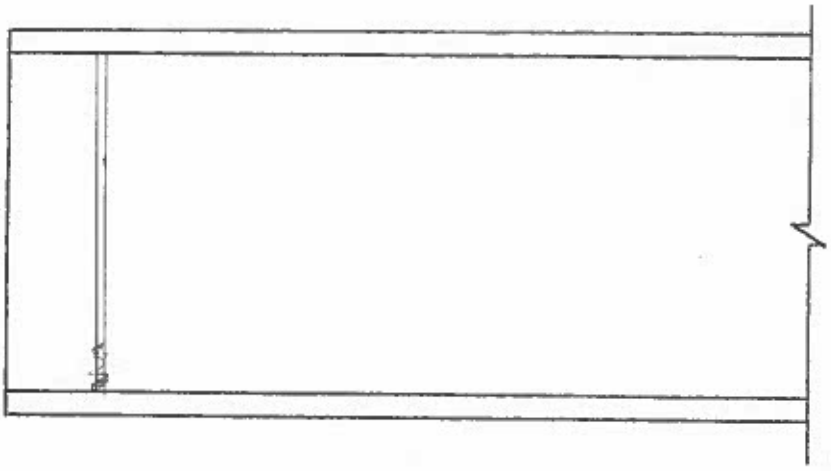

SPAN B, BEAM 6
WEST ELEV. AT P2

REVISION	DATE	CREW	COMPANY	REVISION	DATE	CREW	COMPANY
1				3			
2				4			

Dewberry
59 Elm Street, Suite 101
New Haven, CT 06510

FIELD NOTES

JOB NO.

BRIDGE NO: 03014A

DATE: 7/8/2014

SHEET OF

CREW: RFP, PHH

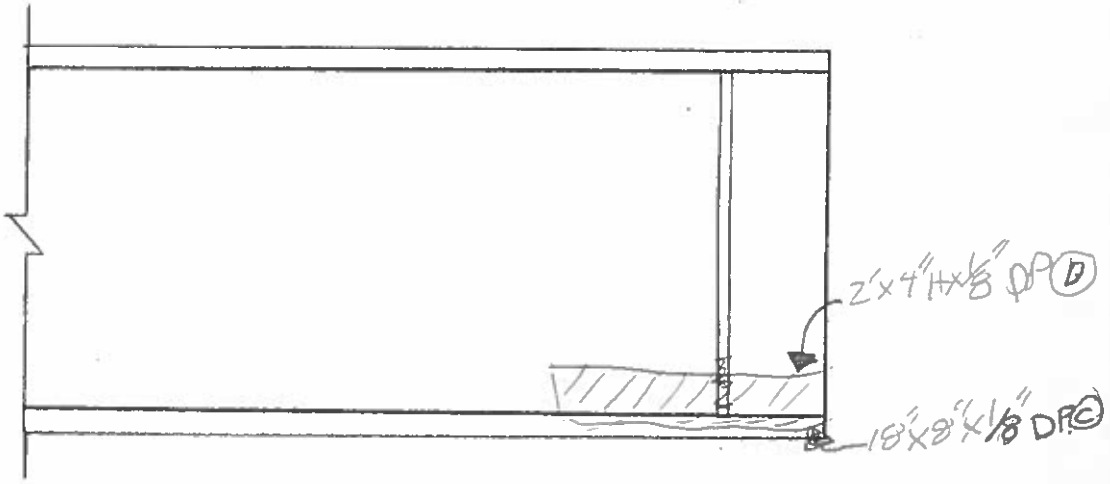

SPAN B, BEAM 7
EAST ELEV. AT P2

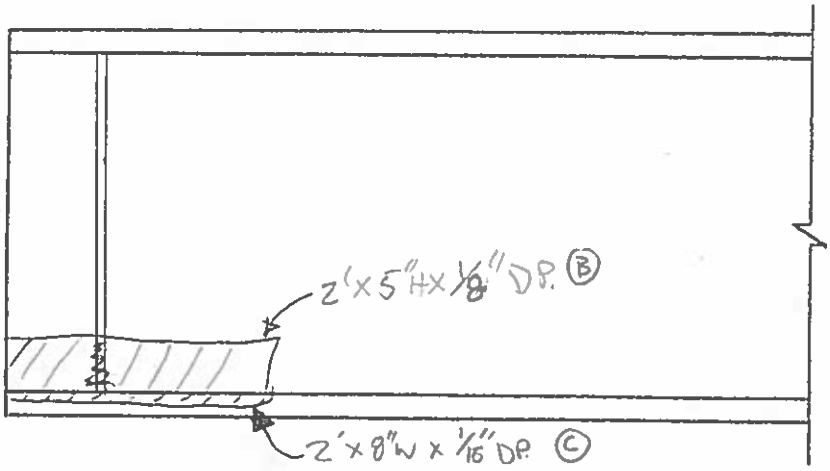

SPAN B, BEAM 7
WEST ELEV. AT P2

REVISION	DATE	CREW	COMPANY	REVISION	DATE	CREW	COMPANY
1				3			
2				4			

Dewberry
59 Elm Street, Suite 101
New Haven, CT 06510

FIELD NOTES

JOB NO.

BRIDGE NO: 03014A

DATE: 6/30/2014

SHEET OF

CREW: RFP, PHH

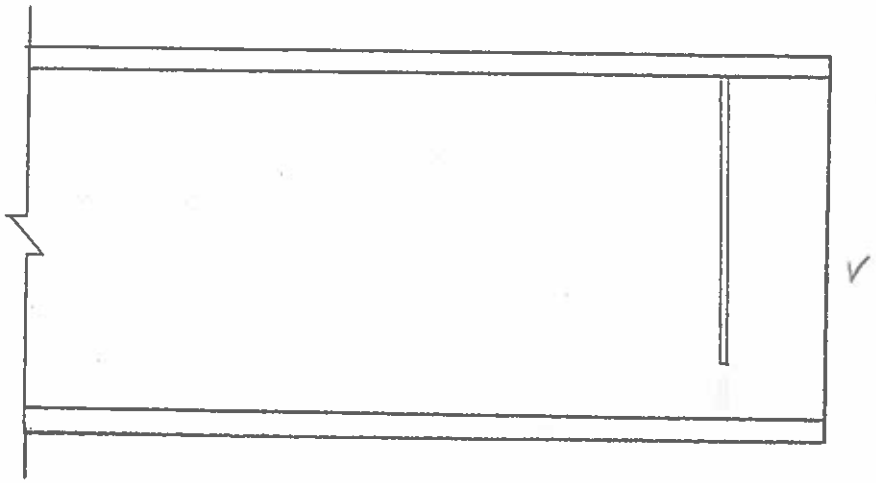

SPAN B, BEAM 8
EAST ELEV. AT P2

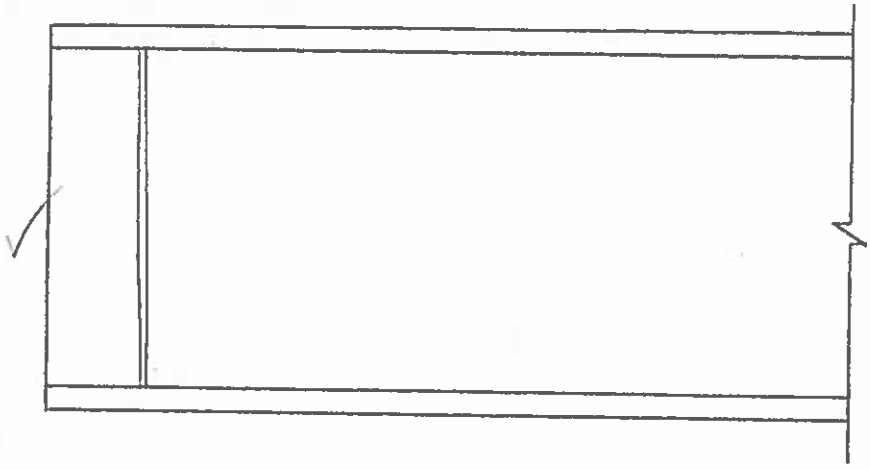

SPAN B, BEAM 8
WEST ELEV. AT P2

REVISION	DATE	CREW	COMPANY	REVISION	DATE	CREW	COMPANY
1				3			
2				4			

Dewberry
59 Elm Street, Suite 101
New Haven, CT 06510

FIELD NOTES

JOB NO.

BRIDGE NO: 03014A

DATE: 6/30/2014

SHEET OF

CREW: RFP, PHH

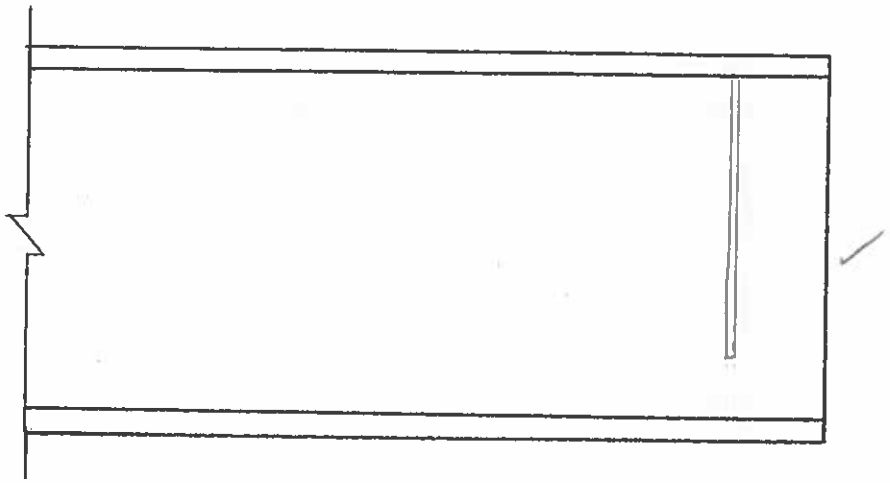

SPAN B, BEAM 9
EAST ELEV. AT P2

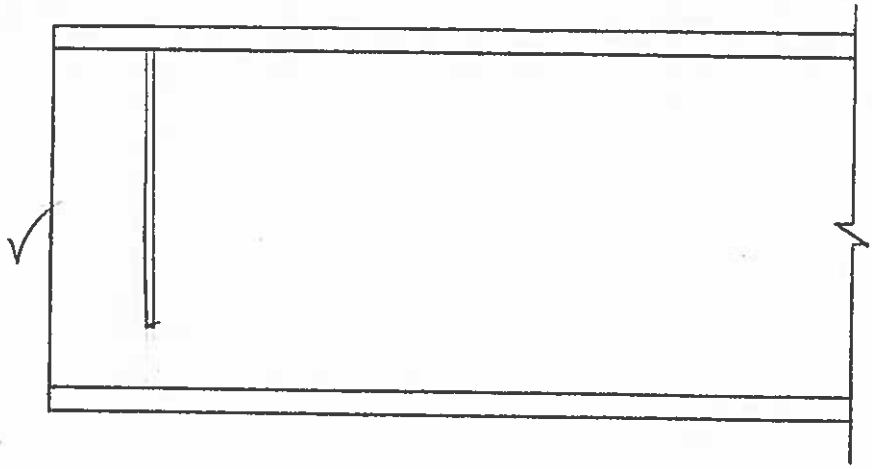

SPAN B, BEAM 9
WEST ELEV. AT P2

REVISION	DATE	CREW	COMPANY	REVISION	DATE	CREW	COMPANY
1				3			
2				4			

Dewberry
59 Elm Street, Suite 101
New Haven, CT 06510

FIELD NOTES	JOB NO.	BRIDGE NO: 03014 A
	DATE: 6/30/2011	SHEET OF
	CREW: RFP, PHH	

- WEB TIPPED WEST 1/8" OVER 2'
- NO SECTION LOSS

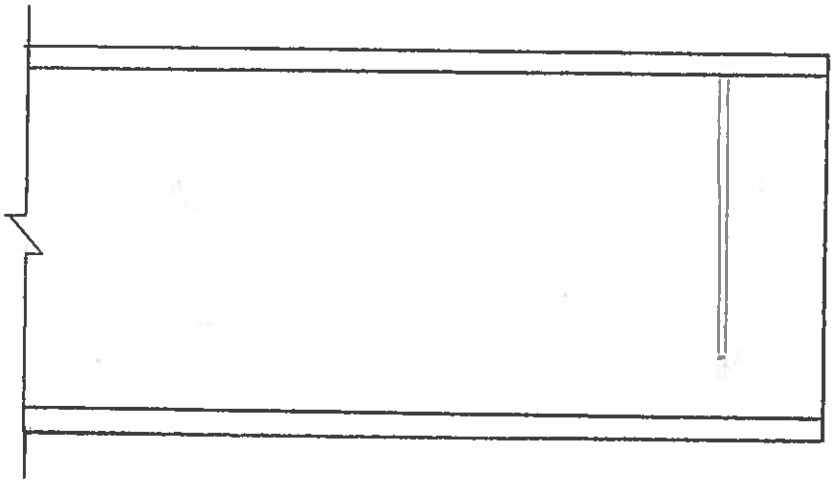

SPAN B, BEAM 10
EAST ELEV. AT P2

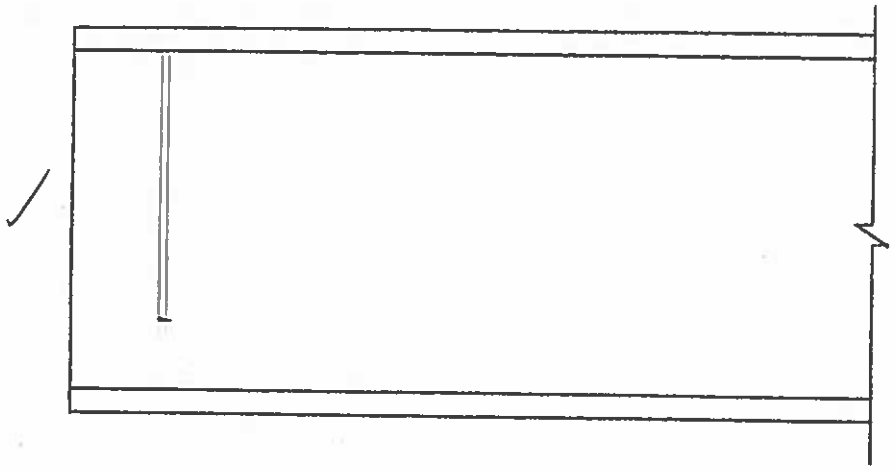

SPAN B, BEAM 10
WEST ELEV. AT P2

REVISION 1	DATE	CREW	COMPANY	REVISION 3	DATE	CREW	COMPANY
REVISION 2	DATE	CREW	COMPANY	REVISION 4	DATE	CREW	COMPANY

Dewberry
59 Elm Street, Suite 101
New Haven, CT 06510

FIELD NOTES

JOB NO.

BRIDGE NO: 03014A

DATE: 6/30/2014

SHEET OF

CREW: RTP, PHH

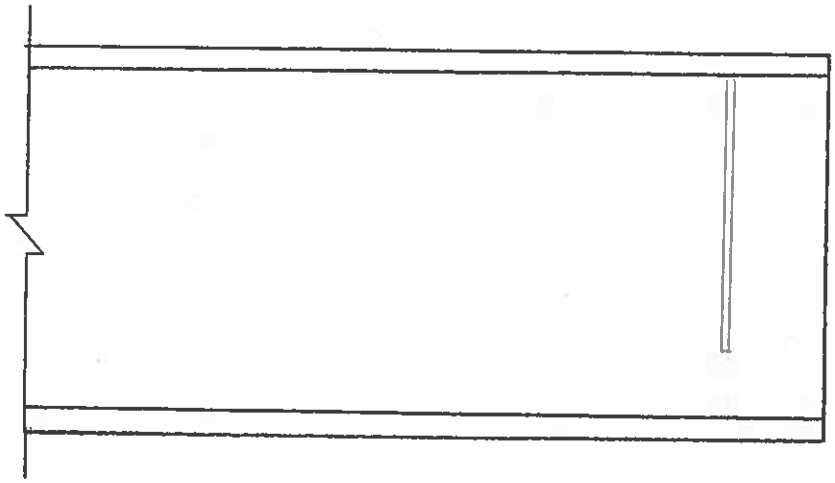

SPAN B, BEAM 11
EAST ELEV. AT P2

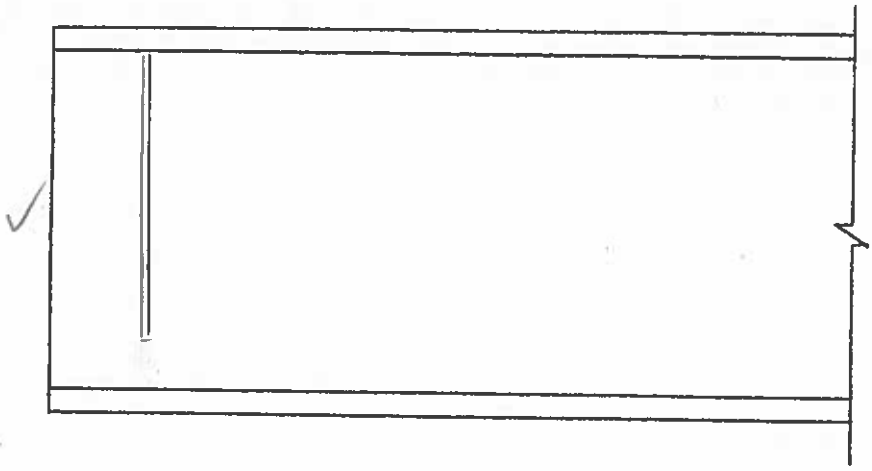

SPAN B, BEAM 11
WEST ELEV. AT P2

REVISION	DATE	CREW	COMPANY	REVISION	DATE	CREW	COMPANY
1				3			
2				4			

Dewberry®	FIELD NOTES	JOB NO.	BRIDGE NO: 03014 A
59 Elm Street, Suite 101 New Haven, CT 06510		DATE: 6/30/2014	SHEET OF
		CREW: RFP, PHH	

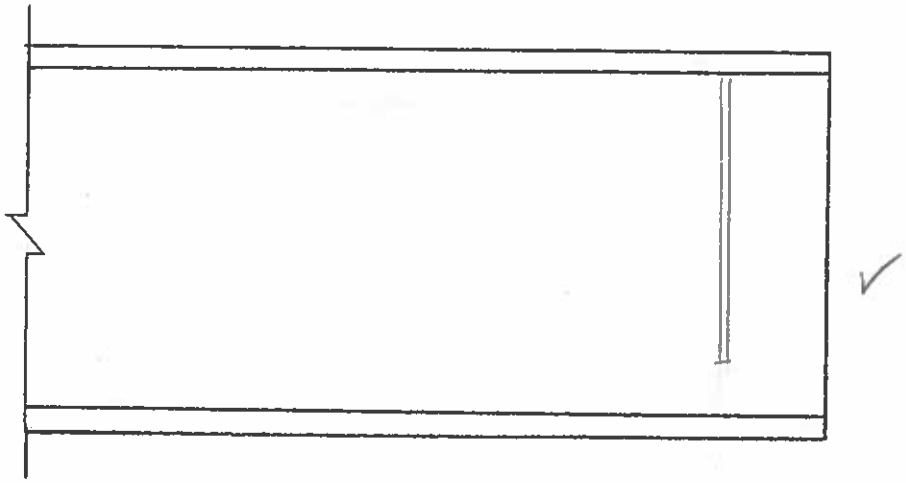

SPAN B, BEAM 12
EAST ELEV. AT P2

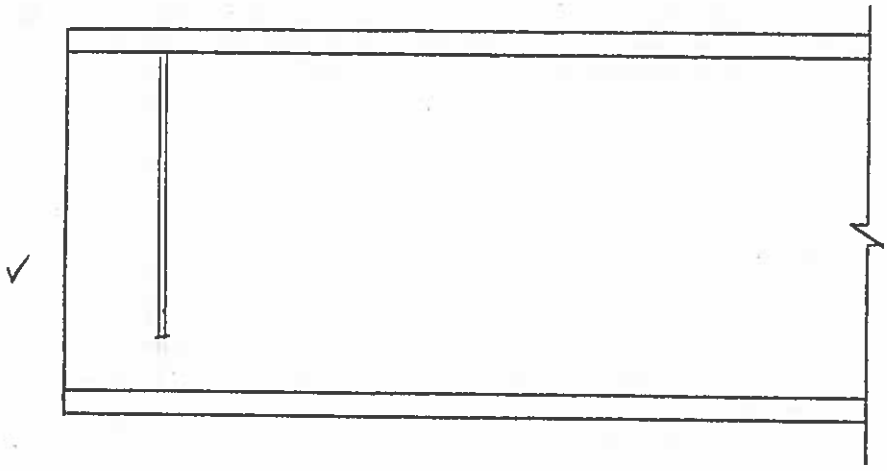

SPAN B, BEAM 12
WEST ELEV. AT P2

REVISION 1	DATE	CREW	COMPANY	REVISION 3	DATE	CREW	COMPANY
REVISION 2	DATE	CREW	COMPANY	REVISION 4	DATE	CREW	COMPANY

Dewberry®	FIELD NOTES	JOB NO.	BRIDGE NO: 03014 A
59 Elm Street, Suite 101 New Haven, CT 06510		DATE: 6/30/2014	SHEET OF
		CREW: RFP, PHH	

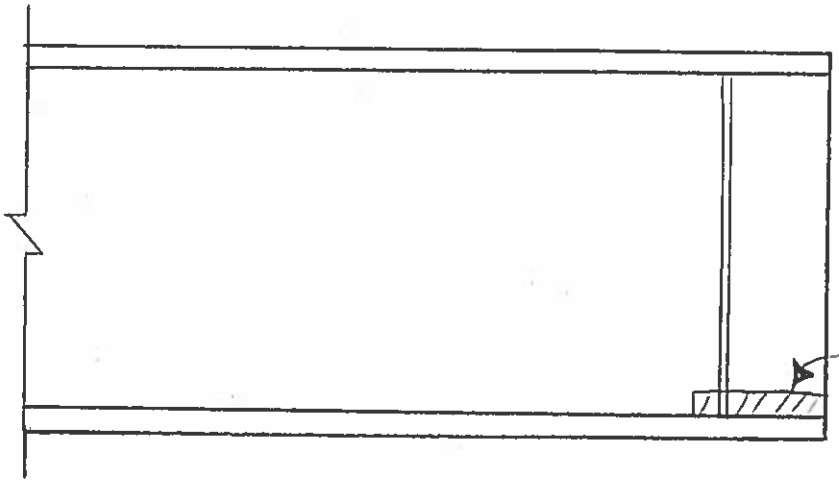

SPAN B, BEAM 13
EAST ELEV. AT P2

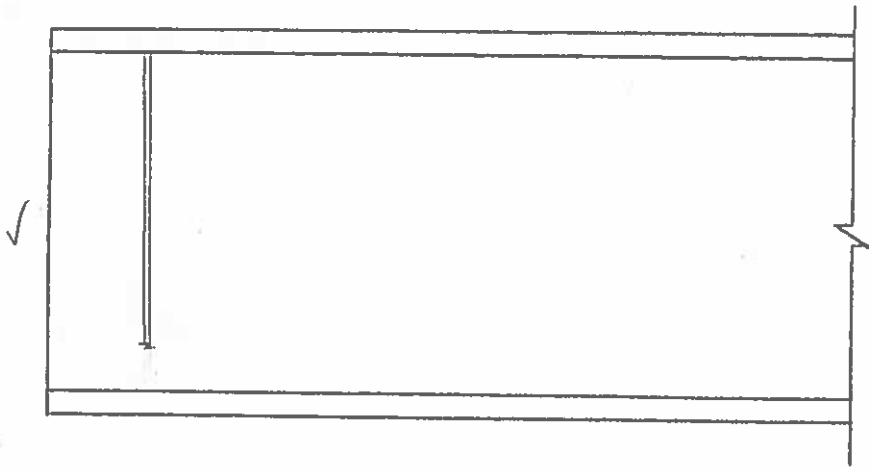

SPAN B, BEAM 13
WEST ELEV. AT P2

REVISION 1	DATE	CREW	COMPANY	REVISION 3	DATE	CREW	COMPANY
REVISION 2	DATE	CREW	COMPANY	REVISION 4	DATE	CREW	COMPANY

Dewberry
59 Elm Street, Suite 101
New Haven, CT 06510

FIELD NOTES

JOB NO.

BRIDGE NO: 03014A

DATE: 6/30/2014

SHEET OF

CREW: RFP, PHH

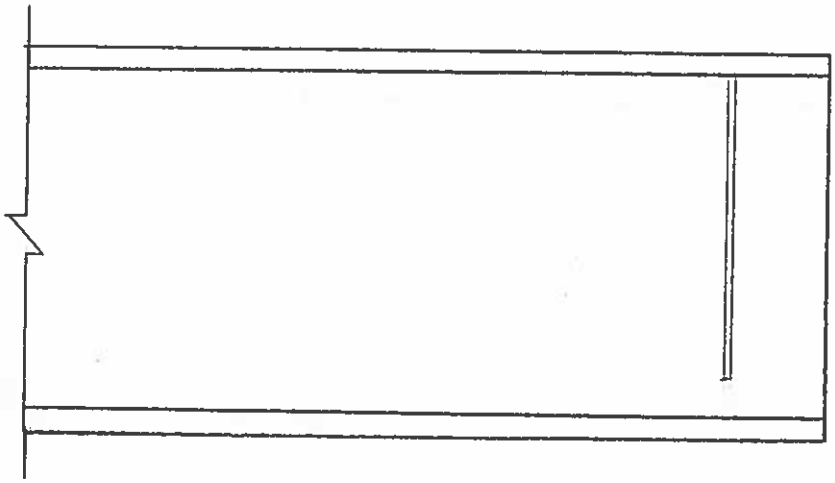

SPAN B, BEAM 14
EAST ELEV. AT P2

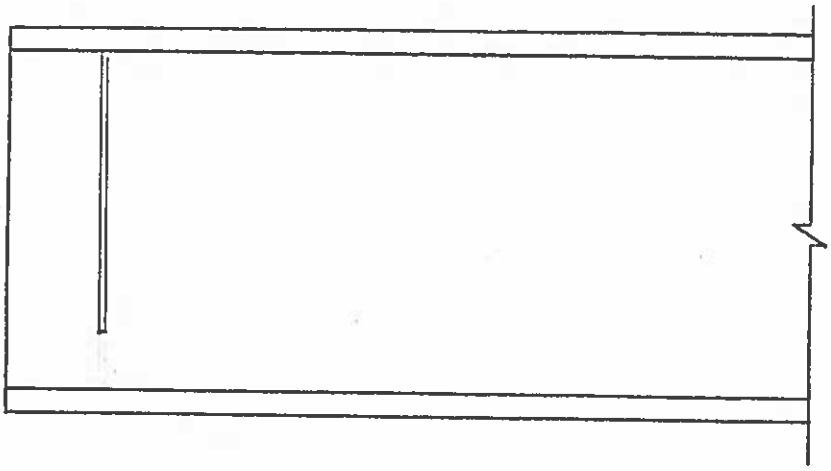

SPAN B, BEAM 14
WEST ELEV. AT P2

REVISION	DATE	CREW	COMPANY	REVISION	DATE	CREW	COMPANY
1				3			
2				4			

Dewberry® 59 Elm Street, Suite 101 New Haven, CT 06510	FIELD NOTES	JOB NO.	BRIDGE NO: 03014 A
		DATE: 6/30/2014	SHEET OF
		CREW: RFP, PHH	

- WEB IS TIPPED 7/16" OVER 2' TO EAST
- NO SECTION LOSS

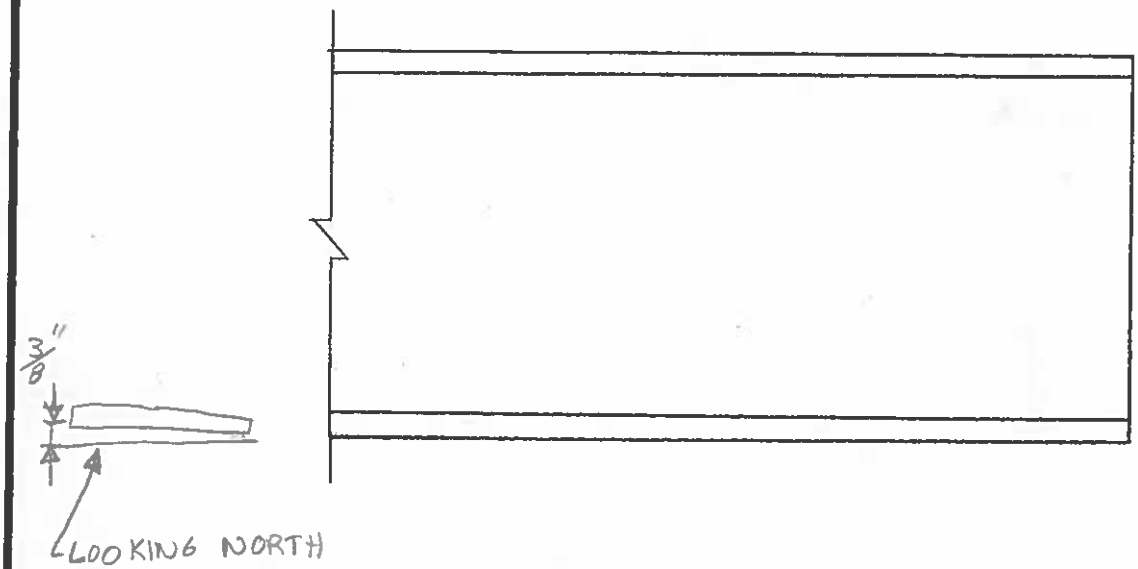

BOTTOM FLANGE IS NOT LEVEL.

SPAN B, BEAM 15
EAST ELEV. AT P2

- NO SECTION LOSS

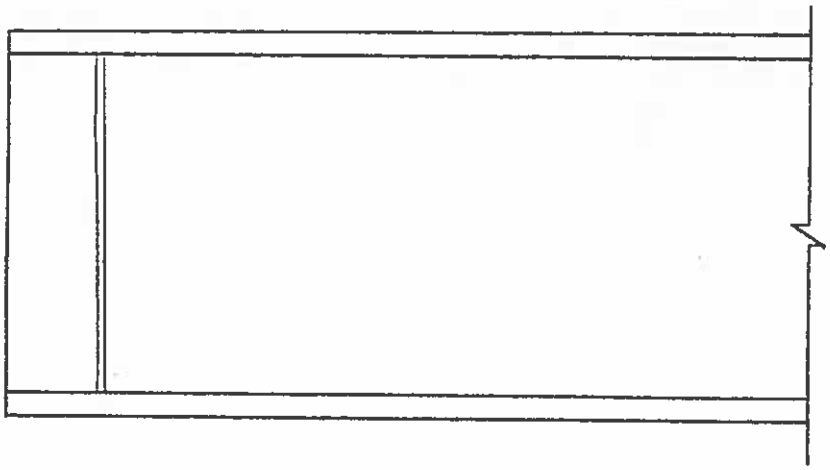

SPAN B, BEAM 15
WEST ELEV. AT P2

REVISION 1	DATE	CREW	COMPANY	REVISION 3	DATE	CREW	COMPANY
REVISION 2	DATE	CREW	COMPANY	REVISION 4	DATE	CREW	COMPANY

Dewberry® 59 Elm Street, Suite 101 New Haven, CT 06510	FIELD NOTES	JOB NO.	BRIDGE NO: 03014A
		DATE: 7/8/14	SHEET OF
		CREW: RFP, PHH	

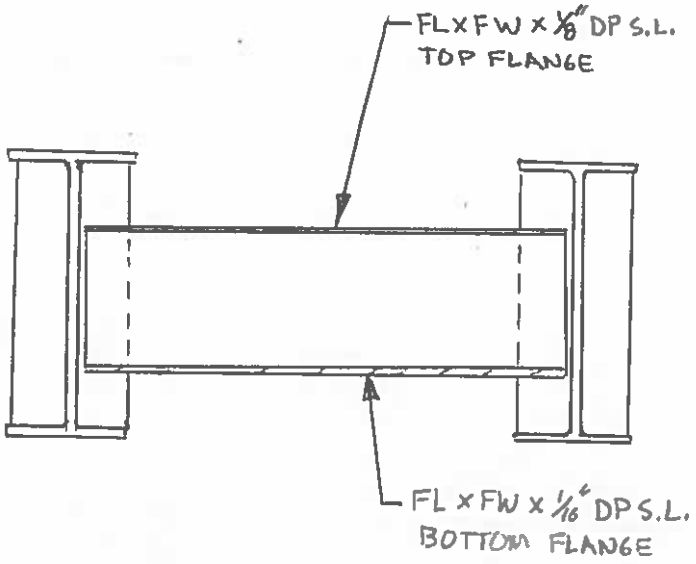

BAY 1 END DIAPHRAGM

SPAN B @ P1

REVISION 1	DATE	CREW	COMPANY	REVISION 3	DATE	CREW	COMPANY
REVISION 2	DATE	CREW	COMPANY	REVISION 4	DATE	CREW	COMPANY

Dewberry
59 Elm Street, Suite 101
New Haven, CT 06510

FIELD NOTES	JOB NO.	BRIDGE NO: 03014 A
	DATE: 7/8/14	SHEET OF
	CREW: RFP, PHH	

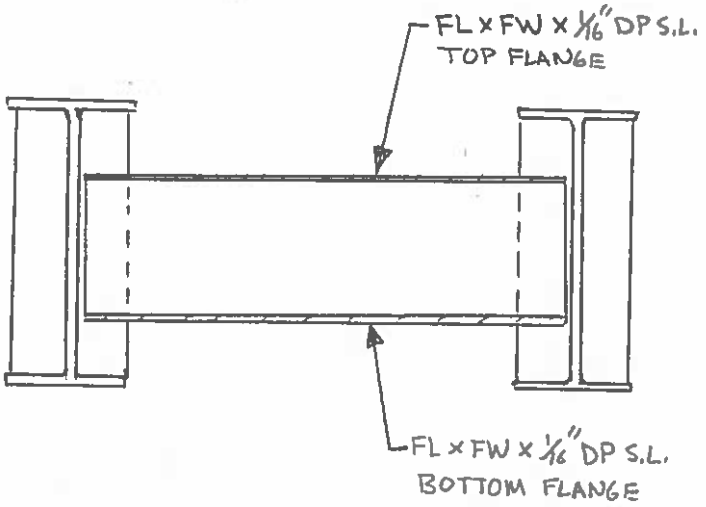

BAY 2 END DIAPHAGM

SPAN B @ P1

REVISION	DATE	CREW	COMPANY	REVISION	DATE	CREW	COMPANY
1				3			
2				4			

Dewberry® 59 Elm Street, Suite 101 New Haven, CT 06510	FIELD NOTES	JOB NO.	BRIDGE NO: 03014A
		DATE: 7/8/14	SHEET OF
		CREW: RFP, PHH	

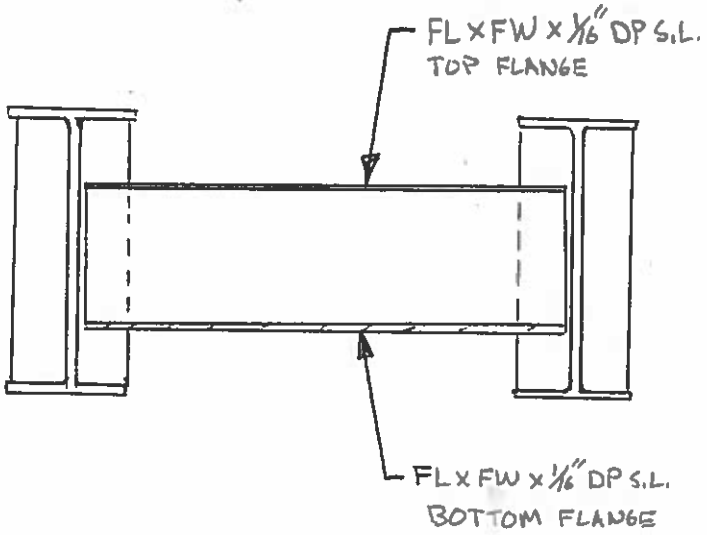

BAY 3 END DIAPHAGM

SPAN B @ P1

REVISION 1	DATE	CREW	COMPANY	REVISION 3	DATE	CREW	COMPANY
REVISION 2	DATE	CREW	COMPANY	REVISION 4	DATE	CREW	COMPANY

Dewberry® 59 Elm Street, Suite 101 New Haven, CT 06510	FIELD NOTES	JOB NO.	BRIDGE NO: 03014A
		DATE: 7/8/14	SHEET OF
		CREW: RFP, PHH	

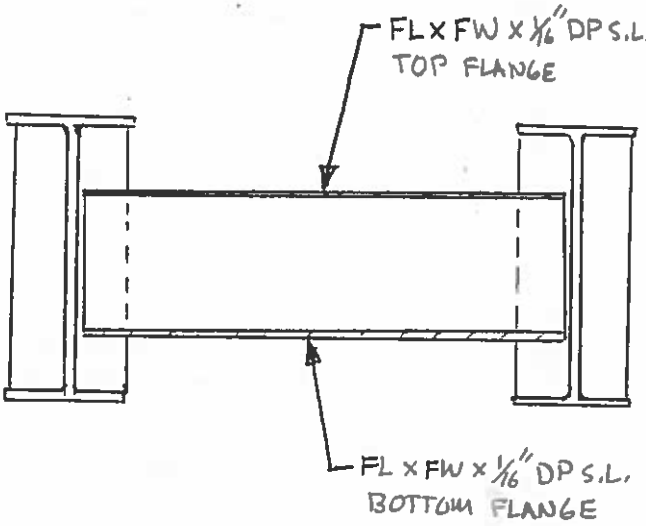

BAY 5 END DIAPHRAGM

SPAN B @ P1

REVISION 1	DATE	CREW	COMPANY	REVISION 3	DATE	CREW	COMPANY
REVISION 2	DATE	CREW	COMPANY	REVISION 4	DATE	CREW	COMPANY

Dewberry® 59 Elm Street, Suite 101 New Haven, CT 06510	FIELD NOTES	JOB NO.	BRIDGE NO: 03014A
		DATE: 7/8/14	SHEET OF
		CREW: RFP, PHH	

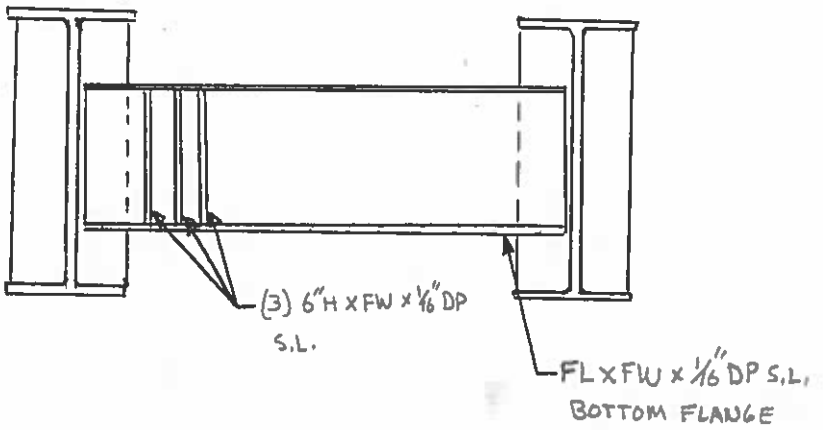

BAY 1 END DIAPHRAGM

SPAN B @ P2

REVISION 1	DATE	CREW	COMPANY	REVISION 3	DATE	CREW	COMPANY
REVISION 2	DATE	CREW	COMPANY	REVISION 4	DATE	CREW	COMPANY

Dewberry® 59 Elm Street, Suite 101 New Haven, CT 06510	FIELD NOTES	JOB NO.	BRIDGE NO: 03014A
		DATE: 7/8/14	SHEET OF
		CREW: RFD, PHH	

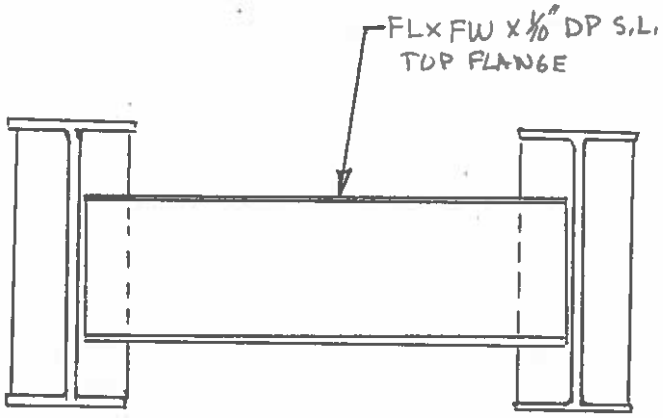

BAY 2 END DIAPHAGM

SPAN B @ P2

REVISION 1 DATE	CREW	COMPANY	REVISION 3 DATE	CREW	COMPANY
REVISION 2 DATE	CREW	COMPANY	REVISION 4 DATE	CREW	COMPANY

Dewberry	FIELD NOTES	JOB NO.	BRIDGE NO: 03014A
59 Elm Street, Suite 101 New Haven, CT 06510		DATE: 7/8/14	SHEET OF
		CREW: RFP, PHH	

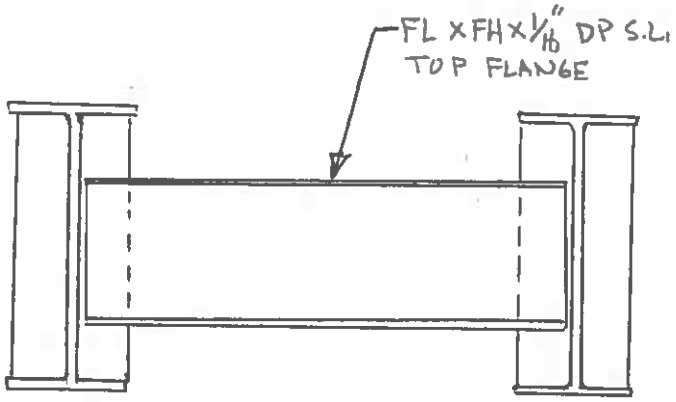

BAY 3 END DIAPHAGM

SPAN B @ P2

REVISION 1	DATE	CREW	COMPANY	REVISION 3	DATE	CREW	COMPANY
REVISION 2	DATE	CREW	COMPANY	REVISION 4	DATE	CREW	COMPANY

Dewberry® 59 Elm Street, Suite 101 New Haven, CT 06510	FIELD NOTES	JOB NO.	BRIDGE NO: 03014A
		DATE: 7/8/14	SHEET OF
		CREW: RFP, PHH	

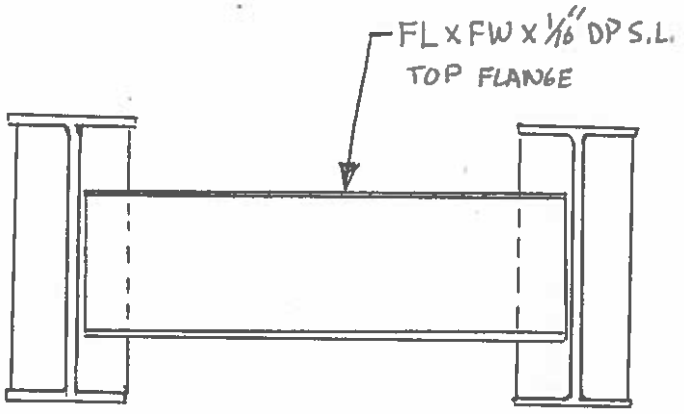

BAY 4 END DIAPHRAGM

SPAN B @ P2

REVISION 1	DATE	CREW	COMPANY	REVISION 3	DATE	CREW	COMPANY
REVISION 2	DATE	CREW	COMPANY	REVISION 4	DATE	CREW	COMPANY

Dewberry®	FIELD NOTES	JOB NO.	BRIDGE NO: 03014A
59 Elm Street, Suite 101 New Haven, CT 06510		DATE: 7/8/14	SHEET OF
		CREW: RFP, PHH	

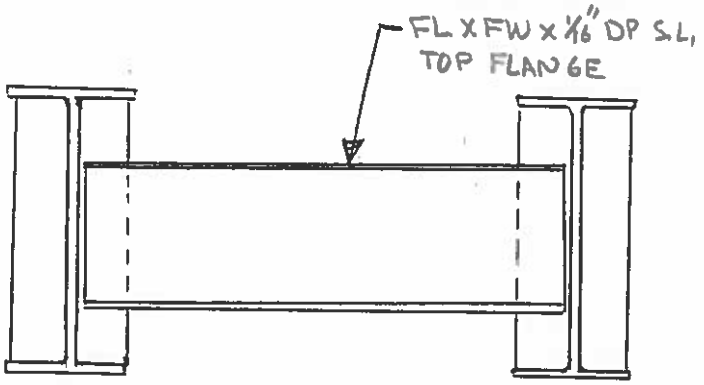

BAY 5 END DIAPHAGM

SPAN B @ PZ

REVISION 1	DATE	CREW	COMPANY	REVISION 3	DATE	CREW	COMPANY
REVISION 2	DATE	CREW	COMPANY	REVISION 4	DATE	CREW	COMPANY

Dewberry	FIELD NOTES	JOB NO.	BRIDGE NO: 03014A
59 Elm Street, Suite 101 New Haven, CT 06510		DATE: 7/8/14	SHEET OF
		CREW: RFP, PHH	

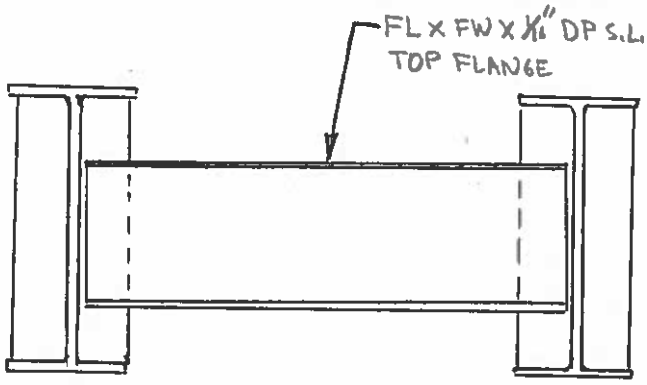

BAY 6 END DIAPHAGM

SPAN B @ P2

REVISION 1 DATE	CREW	COMPANY	REVISION 3 DATE	CREW	COMPANY
REVISION 2 DATE	CREW	COMPANY	REVISION 4 DATE	CREW	COMPANY

Dewberry® 59 Elm Street, Suite 101 New Haven, CT 06510	FIELD NOTES	JOB NO.	BRIDGE NO: 03014 A
		DATE: 7/8/14	SHEET OF
		CREW: RFP, PHH	

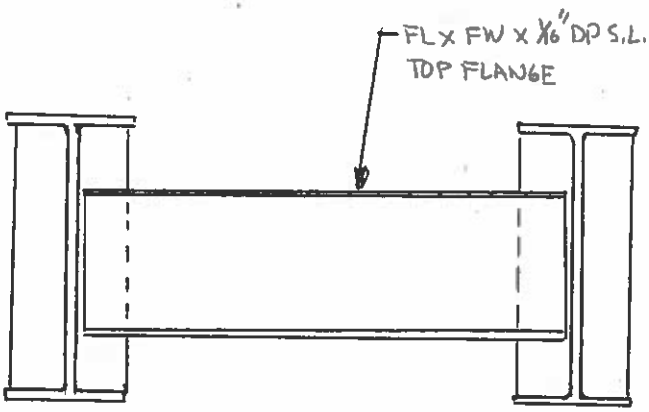

BAY 7 END DIAPHRAGM

SPAN B @ P2

REVISION 1	DATE	CREW	COMPANY	REVISION 3	DATE	CREW	COMPANY
REVISION 2	DATE	CREW	COMPANY	REVISION 4	DATE	CREW	COMPANY

SPAN C

FIELD NOTES

PREPARED BY: Garg Consulting Services, Inc.

PROJ. NO. 170-3013 | BRIDGE NO. 3014A

DATE: 11/02/2010 | SHEET 50 46

CREW: CL, MD, SN

Revision	Date	Crew	Company
1	9/8/12	PKG, AKC	GM12
2	6/30/14 & 7/8/14	RFP, PNH	DEW

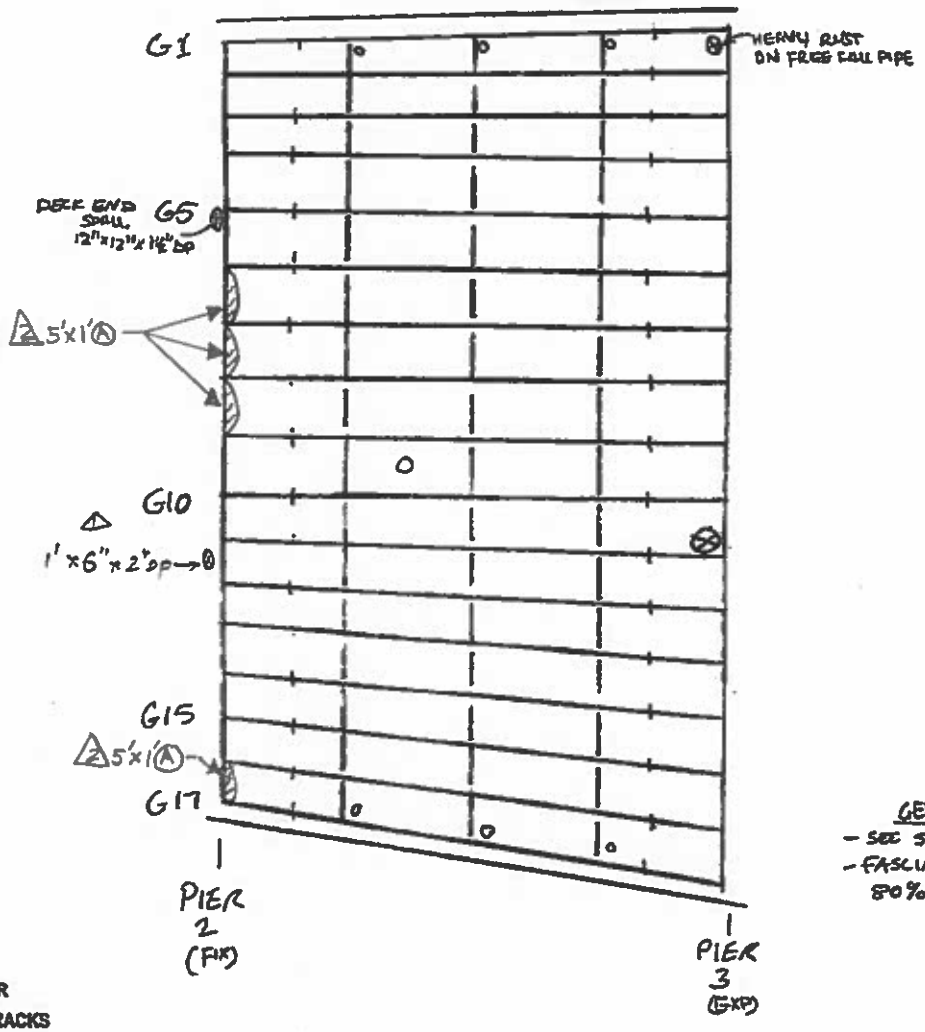

SCUPPER

+ BOTTOM FLANGE COVER PLATE ENDS CHECKED 100% HANDS ON

O WEEP

LEGEND

- HOLLOW AREA
- SHALLOW REBAR
- SPALL AREA
- SPALL AREA WITH EXPOSED REBAR
- MAP CRACKS OR HAIRLINE MAP CRACKS
- HAIRLINE CRACKS (HLC) OR CRACKS (CR)
- HONEY COMB AREA
- SCALE AREA (HVY, MED, OR LT)

GENERAL NOTES

- SEE SPAN A GENERAL NOTES
- FASCIA GIRDERS PEELING PAINT UP TO 80% AREA w/ LT PITTING

FRAMING PLAN SPAN C

2 SEE DETAIL SHEETS FOR MORE INFORMATION

Dewberry
59 Elm Street, Suite 101
New Haven, CT 06510

FIELD NOTES	JOB NO.	BRIDGE NO: 03014A
	DATE: 7/8/2014	SHEET OF
	CREW: RFP, PHH	

- TOP OF WEB TIPPED 3/16" EAST OVER 2'

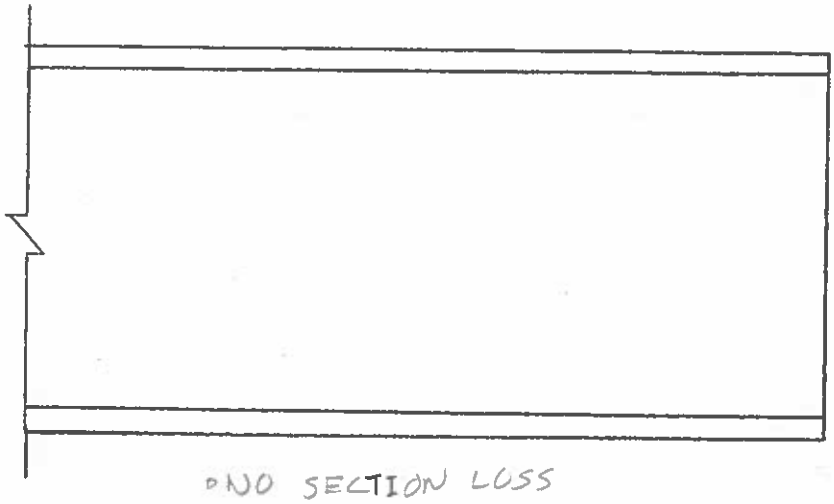

- NO SECTION LOSS

SPAN C, BEAM 1
WEST ELEV. AT P2

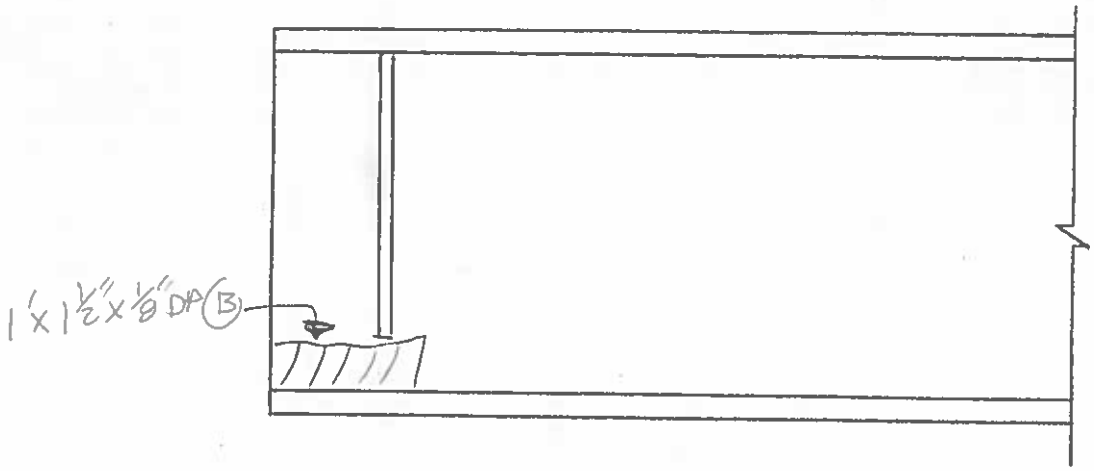

SPAN C, BEAM 1
EAST ELEV. AT P2

REVISION 1	DATE	CREW	COMPANY	REVISION 3	DATE	CREW	COMPANY
REVISION 2	DATE	CREW	COMPANY	REVISION 4	DATE	CREW	COMPANY

Dewberry
59 Elm Street, Suite 101
New Haven, CT 06510

FIELD NOTES

JOB NO.

BRIDGE NO: 03014A

DATE: 7/8/2014

SHEET OF

CREW: RFP, PHH

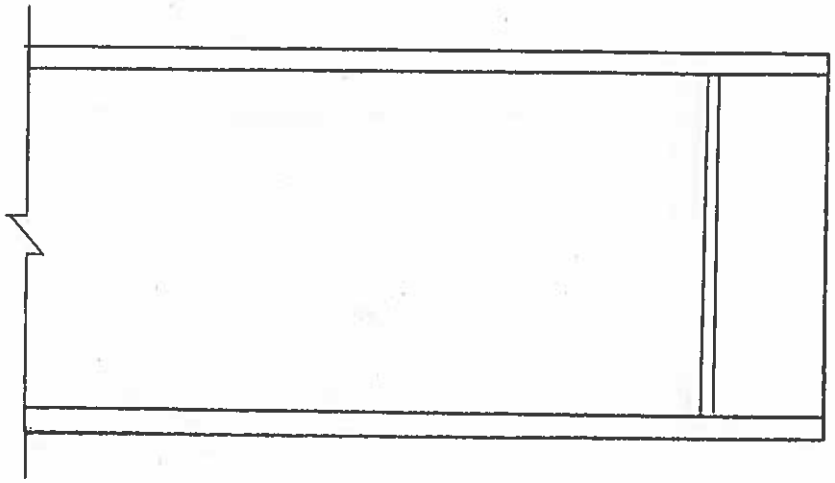

SPAN C, BEAM 2
WEST ELEV. AT P2

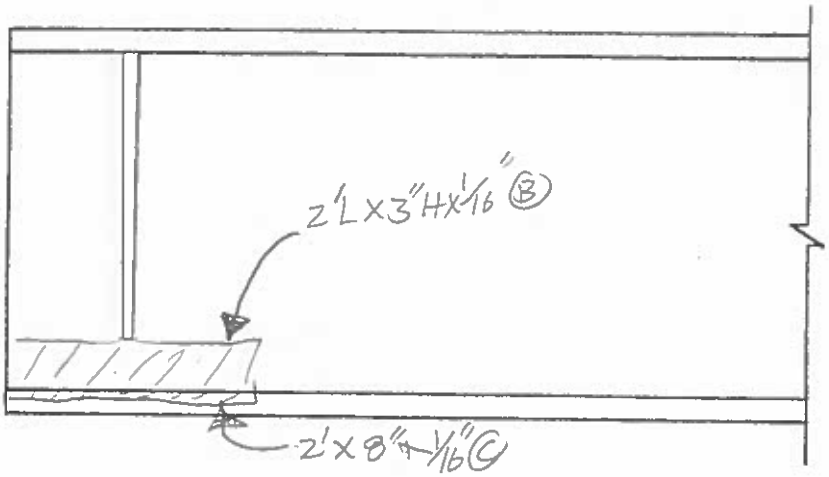

SPAN C, BEAM 2
EAST ELEV. AT P2

REVISION	DATE	CREW	COMPANY	REVISION	DATE	CREW	COMPANY
1				3			
2				4			

Dewberry
59 Elm Street, Suite 101
New Haven, CT 06510

FIELD NOTES	JOB NO.	BRIDGE NO: 03014 A
	DATE: 7/9/2014	SHEET OF
	CREW: RFP, PHH	

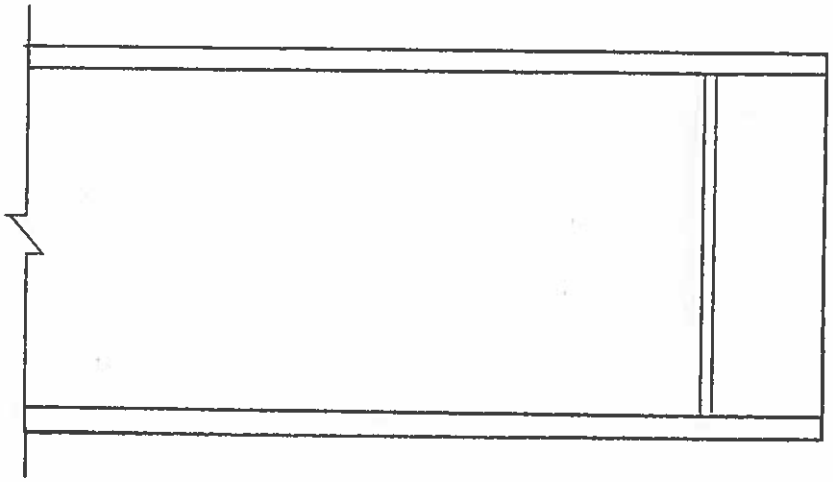

SPAN C, BEAM 3
WEST ELEV. AT P2

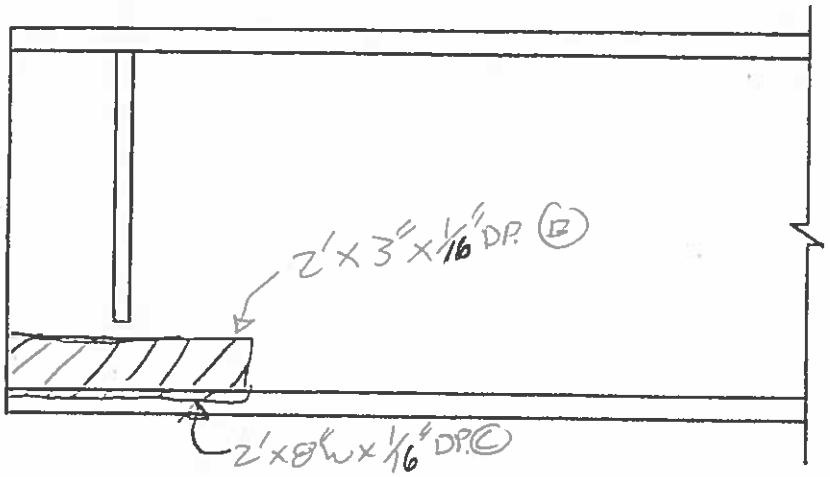

SPAN C, BEAM 3
EAST ELEV. AT P2

REVISION 1	DATE	CREW	COMPANY	REVISION 3	DATE	CREW	COMPANY
REVISION 2	DATE	CREW	COMPANY	REVISION 4	DATE	CREW	COMPANY

Dewberry® 59 Elm Street, Suite 101 New Haven, CT 06510	FIELD NOTES	JOB NO.	BRIDGE NO: 03014 A
		DATE: 7/8/2014	SHEET OF
		CREW: RFP, PHH	

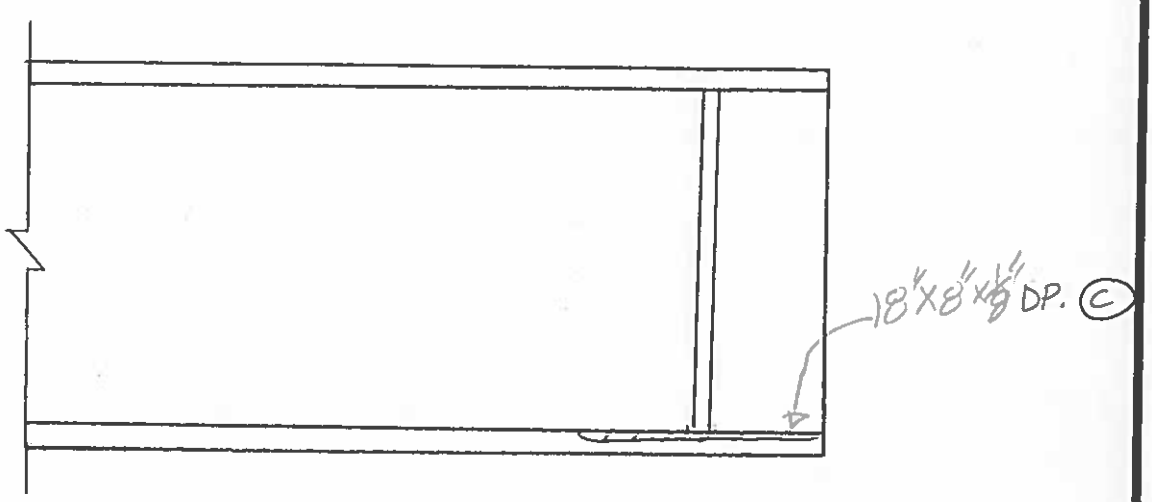

SPAN C, BEAM 4
WEST ELEV. AT P2

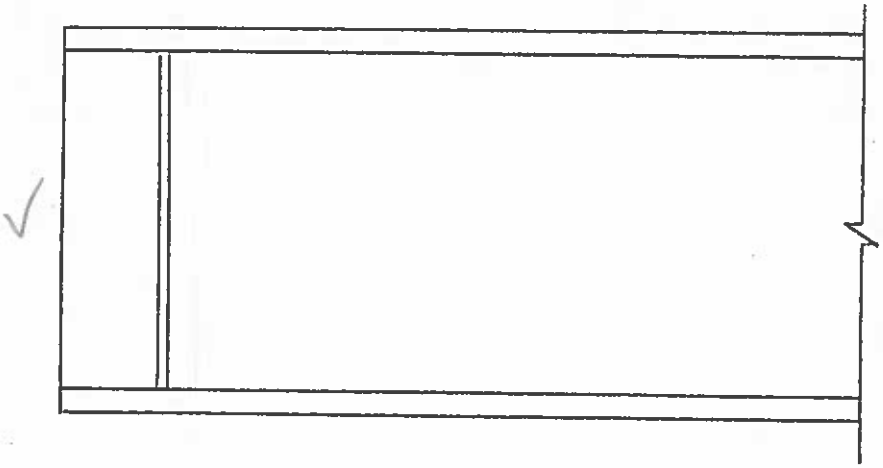

SPAN C, BEAM 4
EAST ELEV. AT P2

REVISION 1	DATE	CREW	COMPANY	REVISION 3	DATE	CREW	COMPANY
REVISION 2	DATE	CREW	COMPANY	REVISION 4	DATE	CREW	COMPANY

Dewberry

59 Elm Street, Suite 101
New Haven, CT 06510

FIELD NOTES

JOB NO.

BRIDGE NO: 03014A

DATE: 7/8/2014

SHEET OF

CREW: RFP, PHH

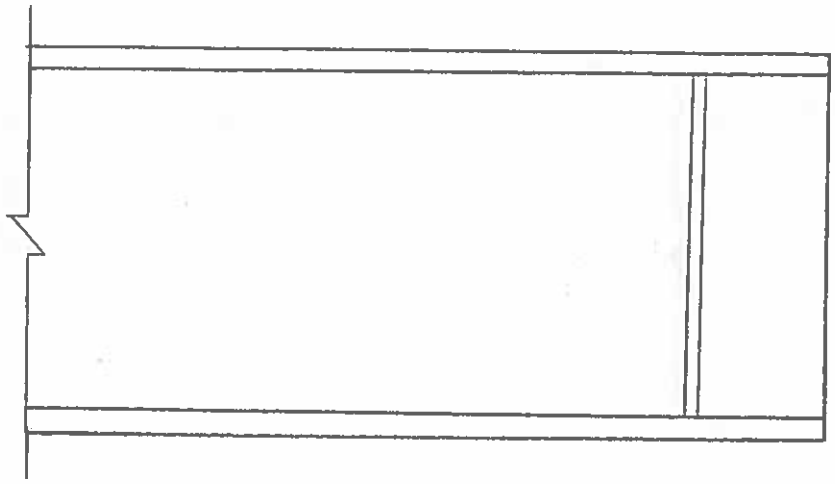

SPAN C, BEAM 5
WEST ELEV. AT P2

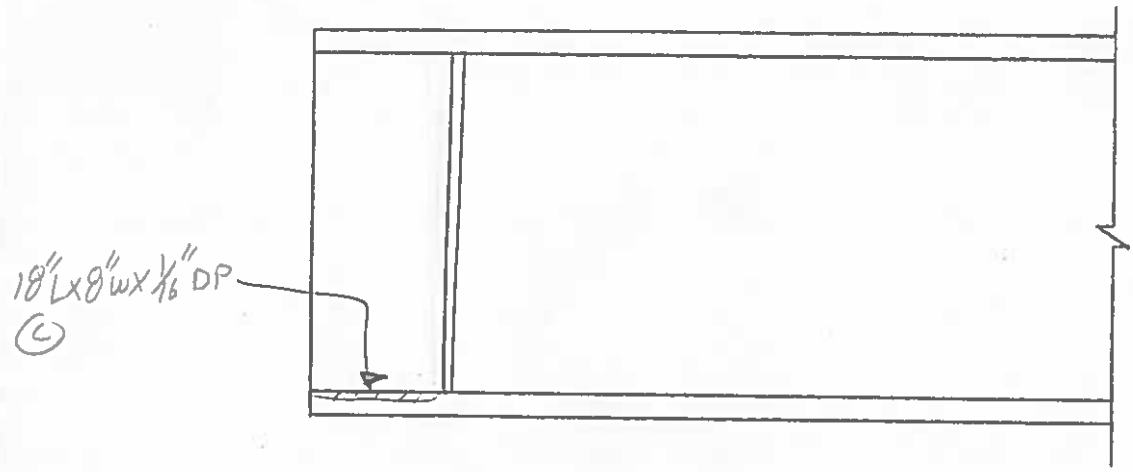

SPAN C, BEAM 5
EAST ELEV. AT P2

REVISION	DATE	CREW	COMPANY	REVISION	DATE	CREW	COMPANY
1				3			
2				4			

Dewberry
59 Elm Street, Suite 101
New Haven, CT 06510

FIELD NOTES

JOB NO.

BRIDGE NO: 03014 A

DATE: 7/9/2014

SHEET OF

CREW: RFP, PHH

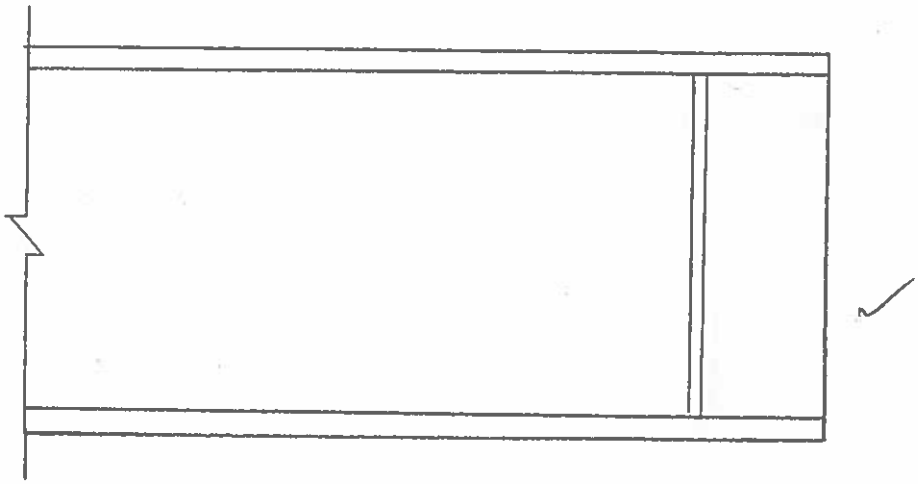

SPAN C, BEAM 6
WEST ELEV. AT P2

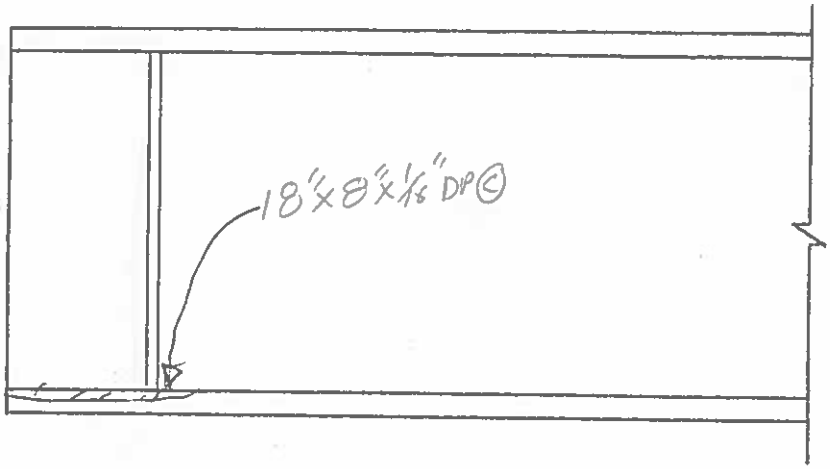

SPAN C, BEAM 6
EAST ELEV. AT P2

REVISION	DATE	CREW	COMPANY	REVISION	DATE	CREW	COMPANY
1				3			
2				4			

Dewberry
59 Elm Street, Suite 101
New Haven, CT 06510

FIELD NOTES

JOB NO.

BRIDGE NO: 03014A

DATE: 7/8/2014

SHEET OF

CREW: RFP, PHH

- TOP OF WEB TIPPED 3/16" EAST OVER 2'

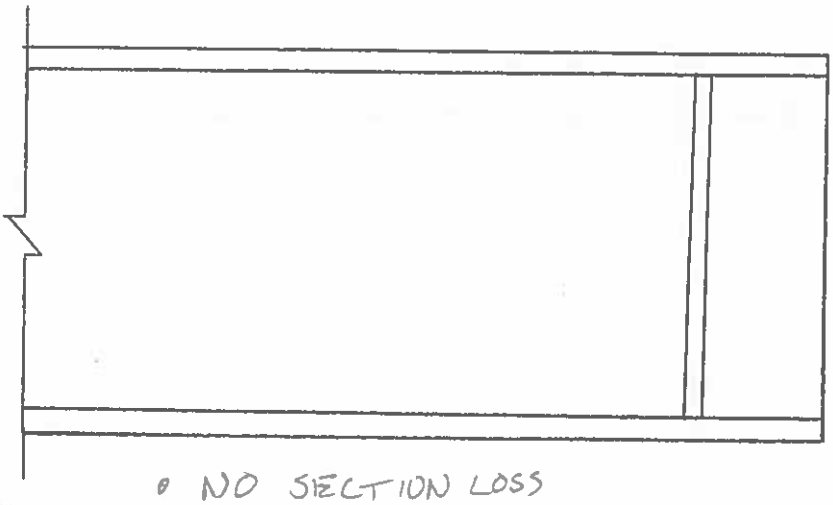

- NO SECTION LOSS

SPAN C, BEAM 7
WEST ELEV. AT P2

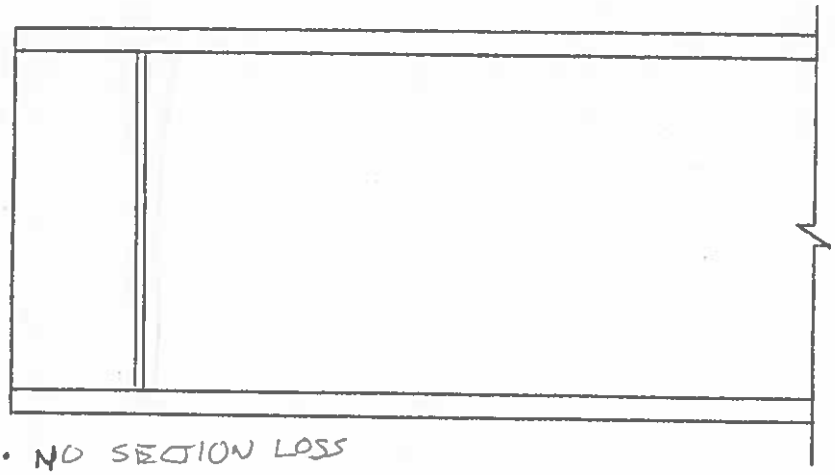

- NO SECTION LOSS

SPAN C, BEAM 7
EAST ELEV. AT P2

REVISION	DATE	CREW	COMPANY	REVISION	DATE	CREW	COMPANY
1				3			
2				4			

Dewberry
59 Elm Street, Suite 101
New Haven, CT 06510

FIELD NOTES

JOB NO.

BRIDGE NO: 03014A

DATE: 7/8/2014

SHEET OF

CREW: RFP, PHH

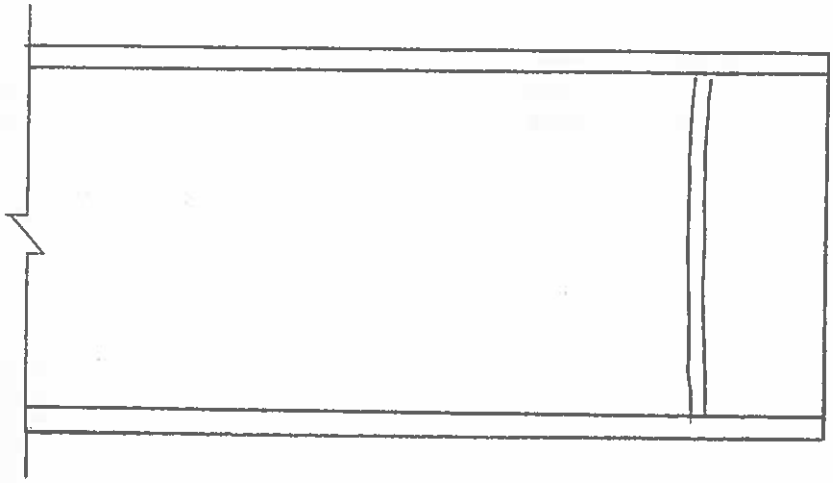

SPAN C, BEAM 8
WEST ELEV. AT P2

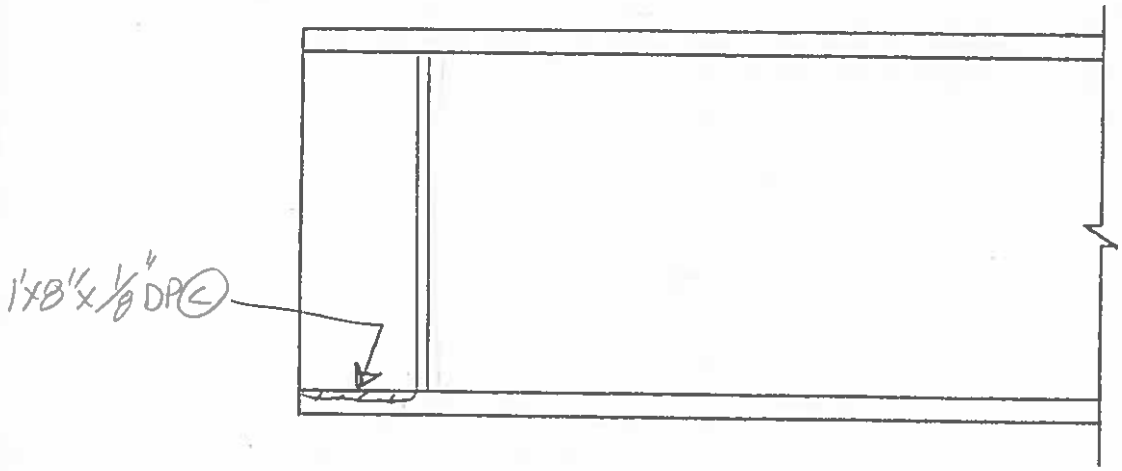

SPAN C, BEAM 8
EAST ELEV. AT P2

REVISION	DATE	CREW	COMPANY	REVISION	DATE	CREW	COMPANY
1				3			
2				4			

Dewberry
59 Elm Street, Suite 101
New Haven, CT 06510

FIELD NOTES

JOB NO.

BRIDGE NO: 03014A

DATE: 6/30/2014

SHEET OF

CREW: RFP, PHH

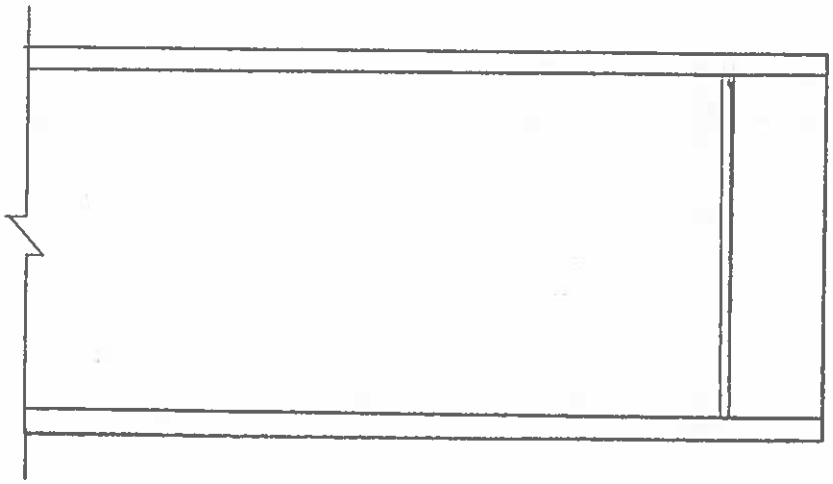

SPAN C, BEAM 9
WEST ELEV. AT P2

7/8/2014

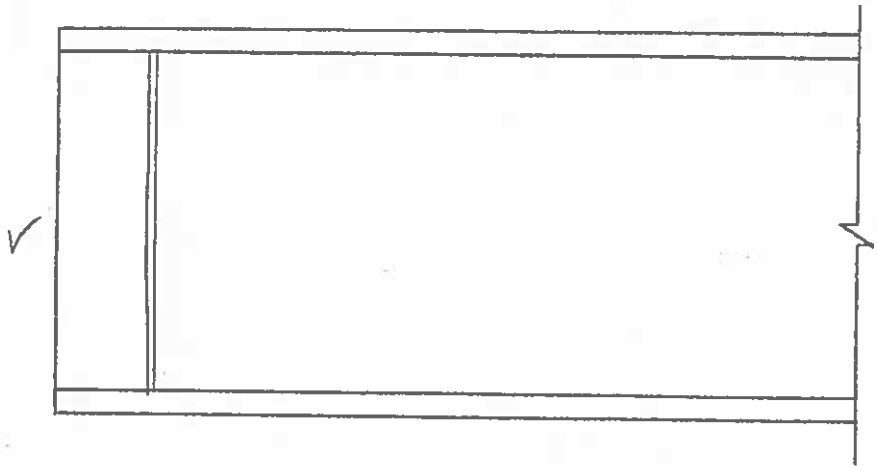

SPAN C, BEAM 9
EAST ELEV. AT P2

REVISION	DATE	CREW	COMPANY	REVISION	DATE	CREW	COMPANY
1				3			
2				4			

Dewberry
59 Elm Street, Suite 101
New Haven, CT 06510

FIELD NOTES	JOB NO.	BRIDGE NO: 03014 A
	DATE: 6/30/14	SHEET OF
	CREW: RFP, PHH	

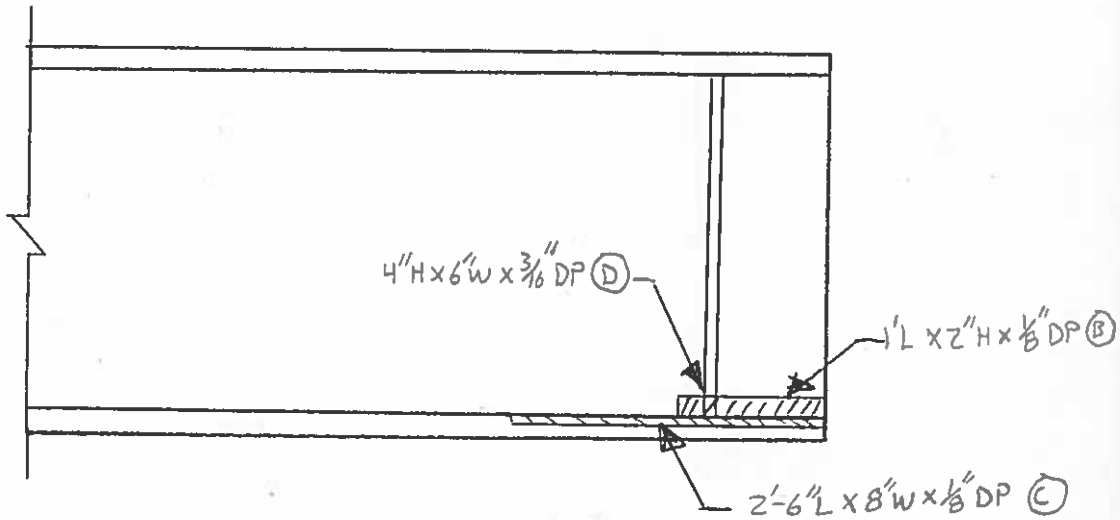

SPAN C, BEAM 10
WEST ELEV. AT P2

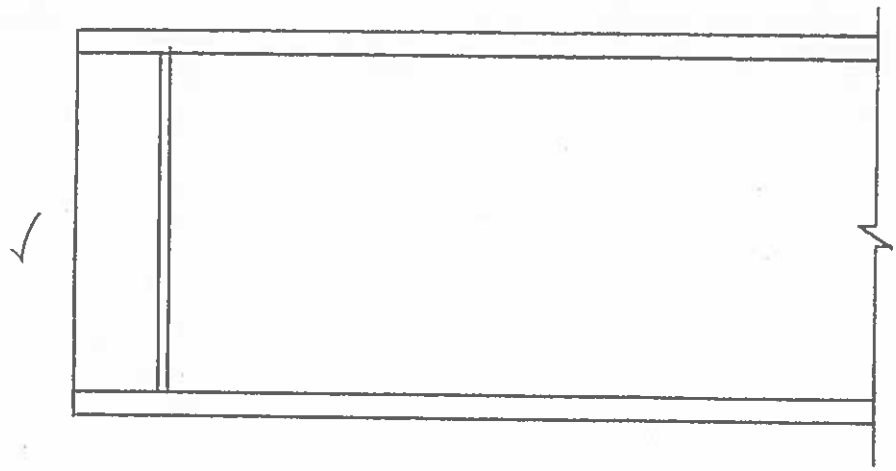

SPAN C, BEAM 10
EAST ELEV. AT P2

REVISION	DATE	CREW	COMPANY	REVISION	DATE	CREW	COMPANY
1				3			
2				4			

Dewberry
59 Elm Street, Suite 101
New Haven, CT 06510

FIELD NOTES

JOB NO.

BRIDGE NO: 03014 A

DATE: 6/30/2014

SHEET OF

CREW: RFP, PHH

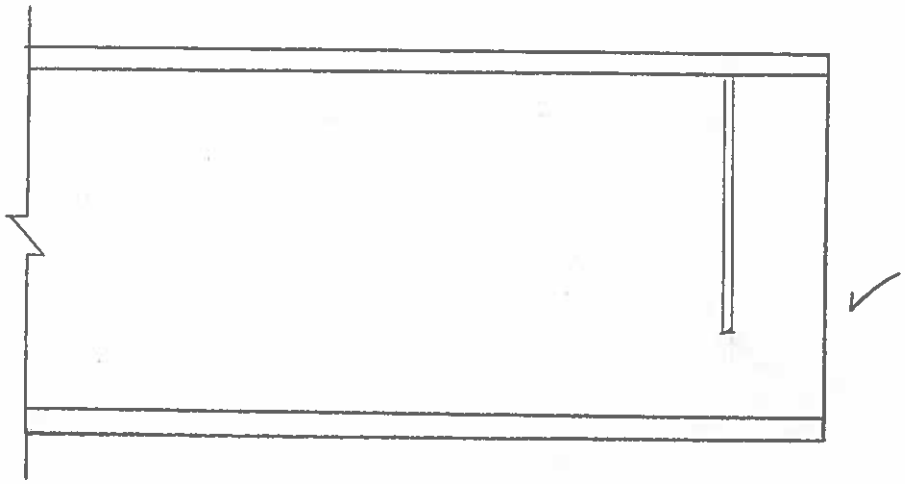

SPAN C, BEAM 11
WEST ELEV. AT P2

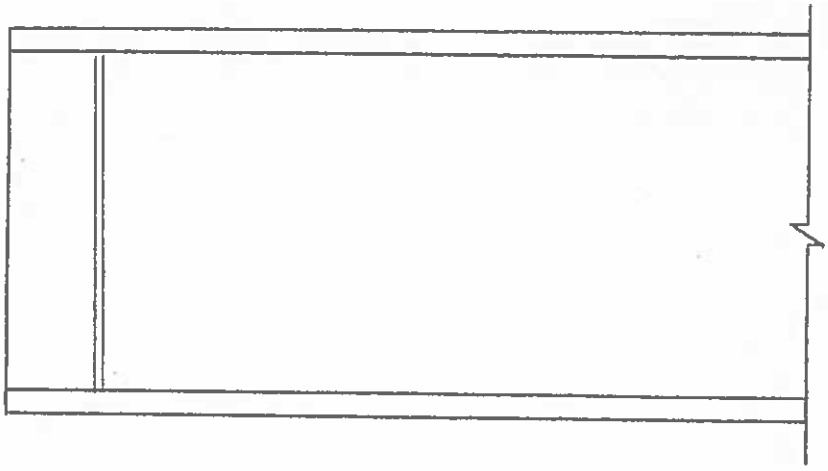

SPAN C, BEAM 11
EAST ELEV. AT P2

REVISION	DATE	CREW	COMPANY	REVISION	DATE	CREW	COMPANY
1				3			
2				4			

Dewberry
59 Elm Street, Suite 101
New Haven, CT 06510

FIELD NOTES

JOB NO.

BRIDGE NO: 03014 A

DATE: 6/30/2014

SHEET OF

CREW:

- NO SECTION LOSS

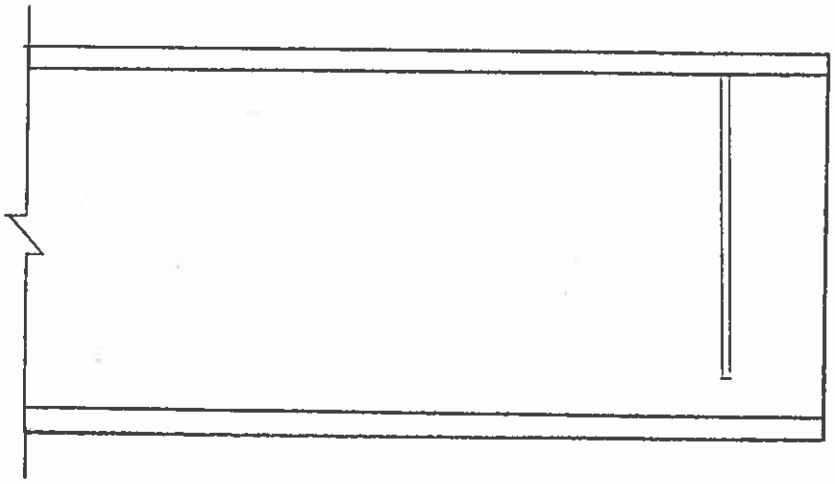

SPAN C, BEAM 12
WEST ELEV. AT P2

- WEB TILTED 1/4" EAST

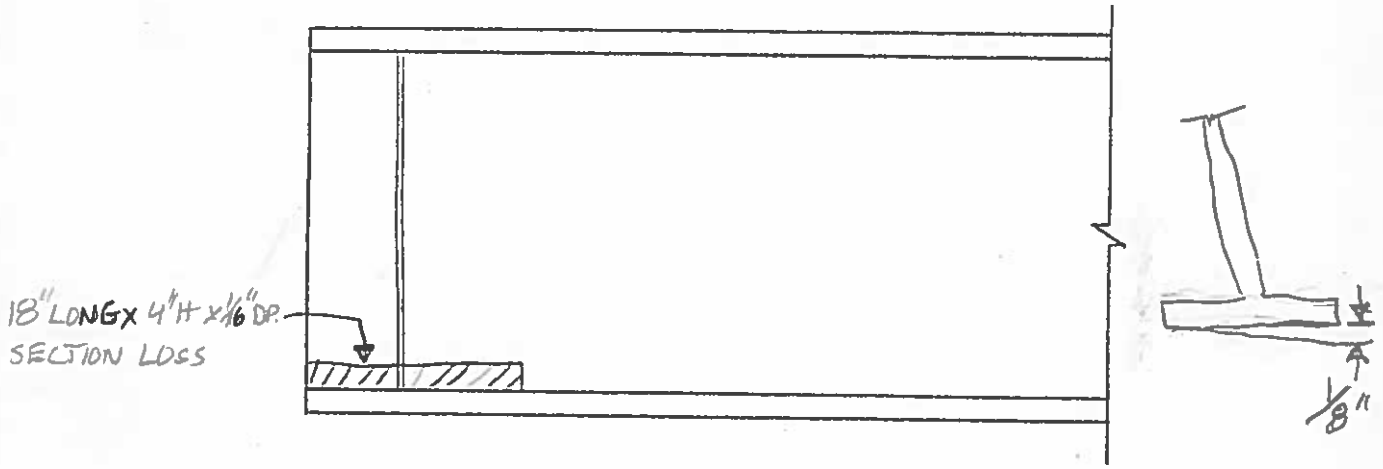

SPAN C, BEAM 12
EAST ELEV. AT P2

LOOKING SOUTH

REVISION 1	DATE	CREW	COMPANY	REVISION 3	DATE	CREW	COMPANY
REVISION 2	DATE	CREW	COMPANY	REVISION 4	DATE	CREW	COMPANY

Dewberry
59 Elm Street, Suite 101
New Haven, CT 06510

FIELD NOTES

JOB NO.

BRIDGE NO: 03014 A

DATE: 6/30/2014

SHEET OF

CREW: RFP, PHH

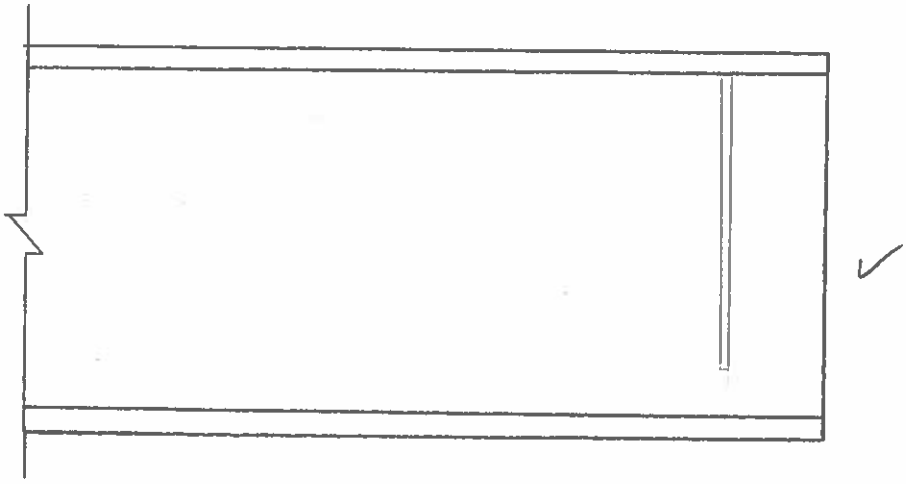

SPAN C, BEAM 13
WEST ELEV. AT P2

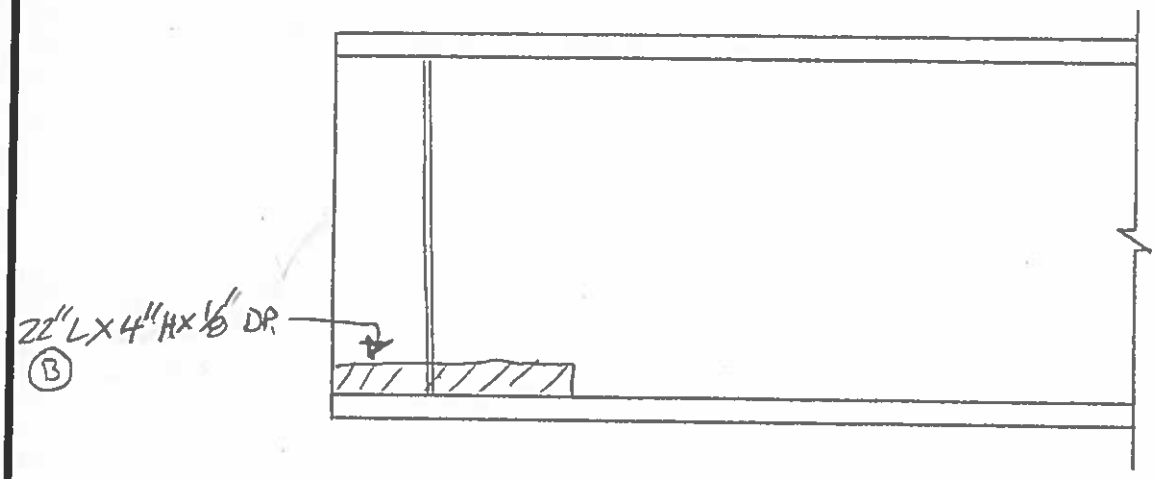

SPAN C, BEAM 13
EAST ELEV. AT P2

REVISION	DATE	CREW	COMPANY	REVISION	DATE	CREW	COMPANY
1				3			
2				4			

Dewberry
59 Elm Street, Suite 101
New Haven, CT 06510

FIELD NOTES

JOB NO.

BRIDGE NO: 03014 A

DATE: 6/30/2014

SHEET OF

CREW: RFP, PHH

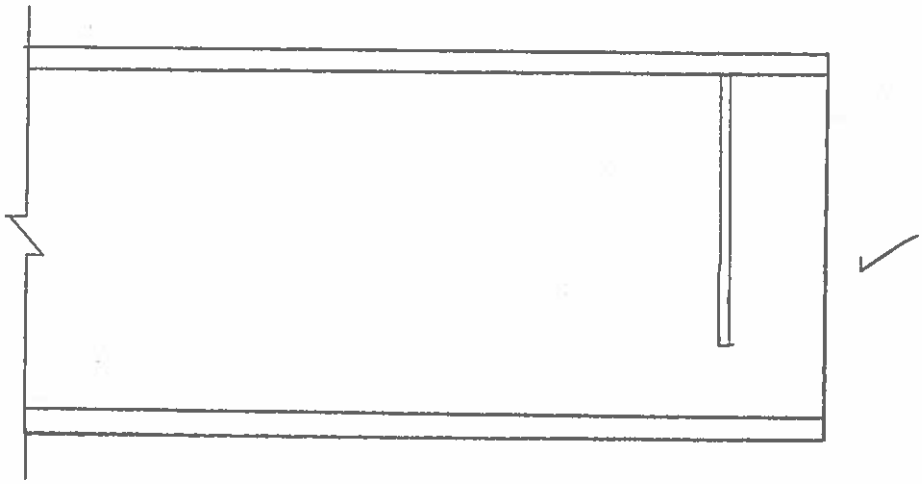

SPAN C, BEAM 14
WEST ELEV. AT P2

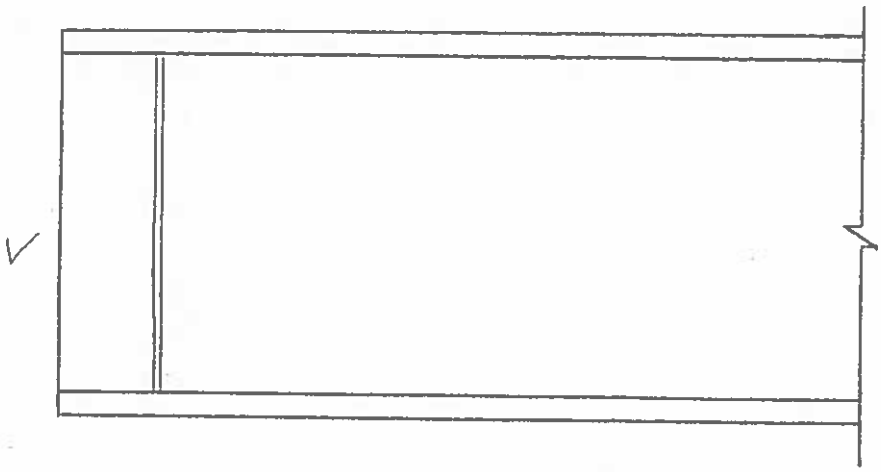

SPAN C, BEAM 14
EAST ELEV. AT P2

REVISION	DATE	CREW	COMPANY	REVISION	DATE	CREW	COMPANY
1				3			
2				4			

Dewberry
59 Elm Street, Suite 101
New Haven, CT 06510

FIELD NOTES

JOB NO.

BRIDGE NO: 03014 A

DATE: 6/30/2014

SHEET OF

CREW: RFP, PHH

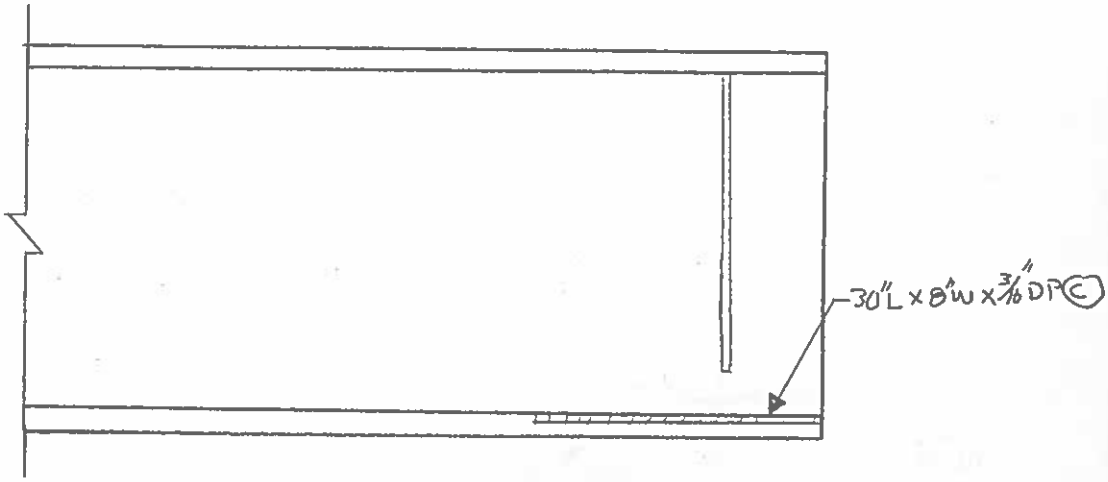

SPAN C, BEAM 15
WEST ELEV. AT P2

• WEB TILTED ~~EAST~~ 3/16" OVER 2'

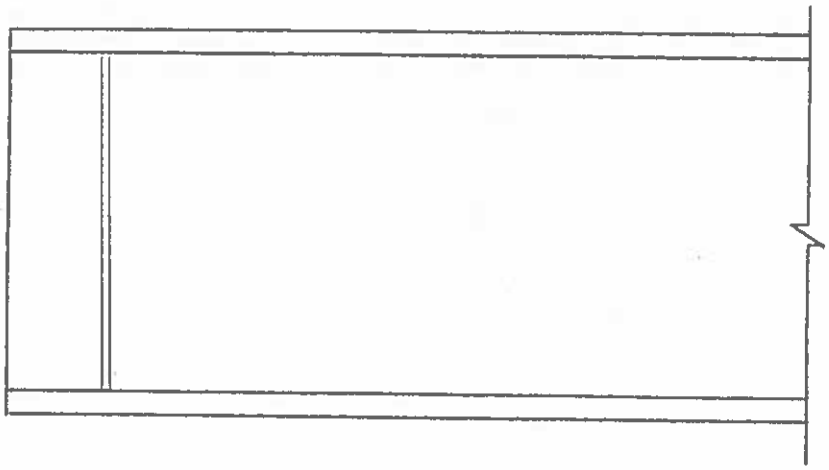

SPAN C, BEAM 15
EAST ELEV. AT P2

REVISION	DATE	CREW	COMPANY	REVISION	DATE	CREW	COMPANY
1				3			
2				4			

Dewberry
59 Elm Street, Suite 101
New Haven, CT 06510

FIELD NOTES

JOB NO.

BRIDGE NO: 03014A

DATE: 6/30/2014

SHEET OF

CREW: RFP, PHH

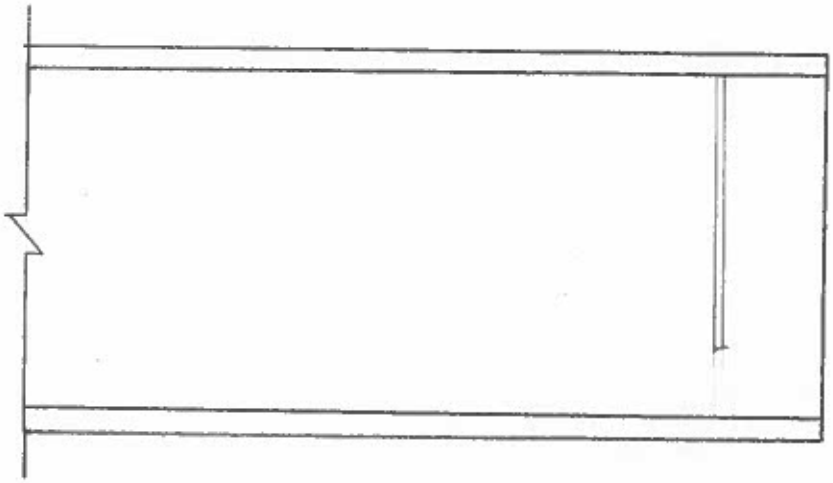

SPAN C, BEAM 16
WEST ELEV. AT P2

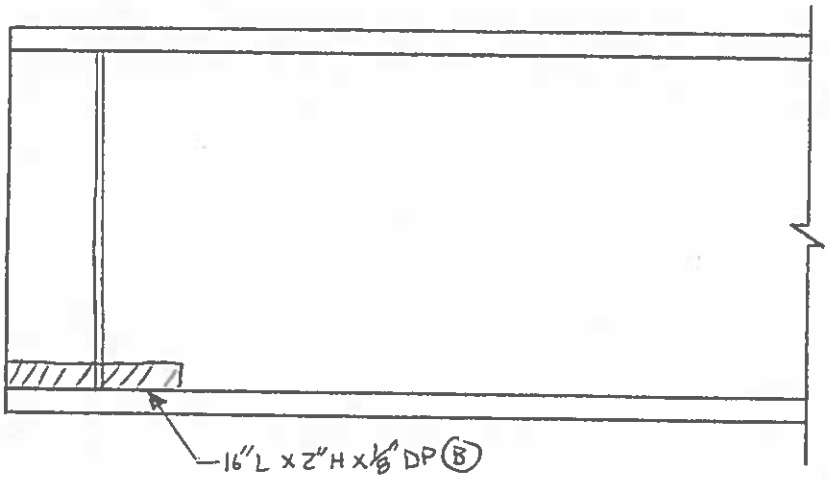

SPAN C, BEAM 16
EAST ELEV. AT P2

REVISION	DATE	CREW	COMPANY	REVISION	DATE	CREW	COMPANY
1				3			
2				4			

Dewberry
59 Elm Street, Suite 101
New Haven, CT 06510

FIELD NOTES	JOB NO.	BRIDGE NO: 03014A
	DATE: 6/30/2014	SHEET OF
	CREW: RFP, PHH	

- WEB TILTED $\frac{9}{16}$" OVER 2' TO THE EAST

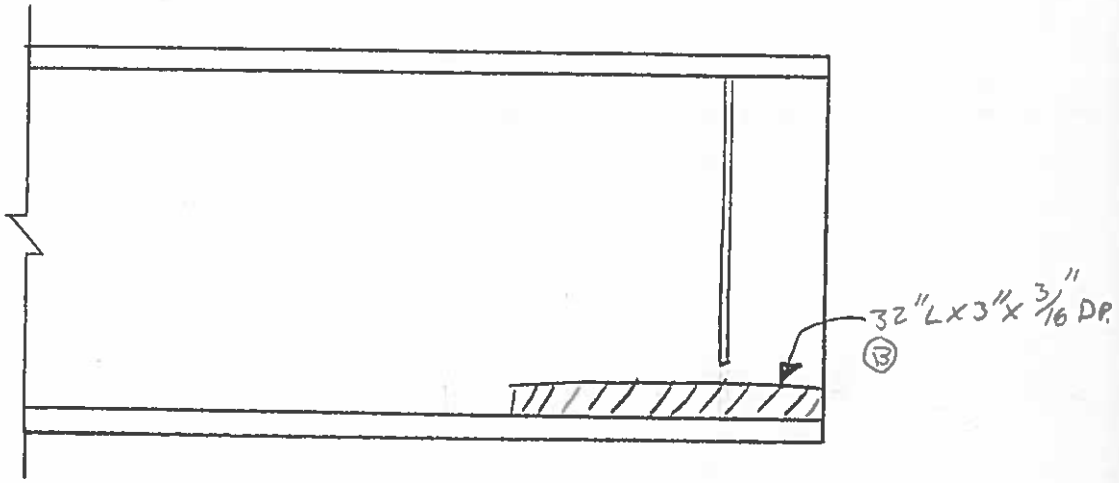

SPAN C, BEAM 17
WEST ELEV. AT P2

- NO SECTION LOSS

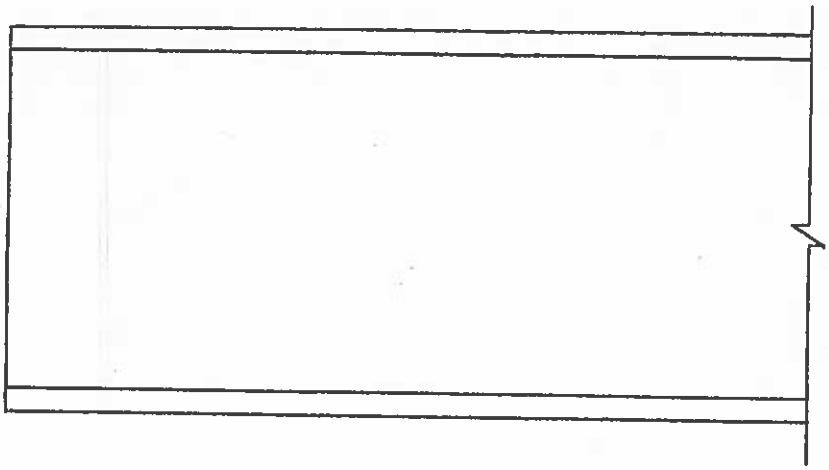

SPAN C, BEAM 17
EAST ELEV. AT P2

REVISION	DATE	CREW	COMPANY	REVISION	DATE	CREW	COMPANY
1				3			
2				4			

Dewberry
59 Elm Street, Suite 101
New Haven, CT 06510

FIELD NOTES

JOB NO.

BRIDGE NO: 03014A

DATE: 7/8/2014

SHEET OF

CREW: RFP, PHH

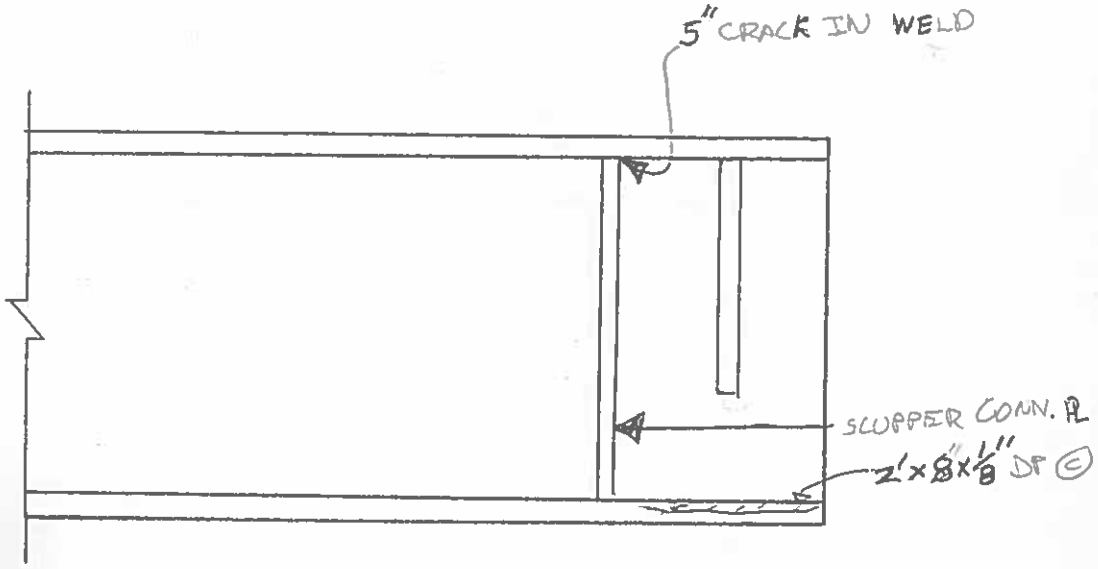

SPAN C, BEAM 1
EAST ELEV. AT P3

- TOP OF WEB TIPPED ½" WEST OVER 2'
- NO SECTION LOSS

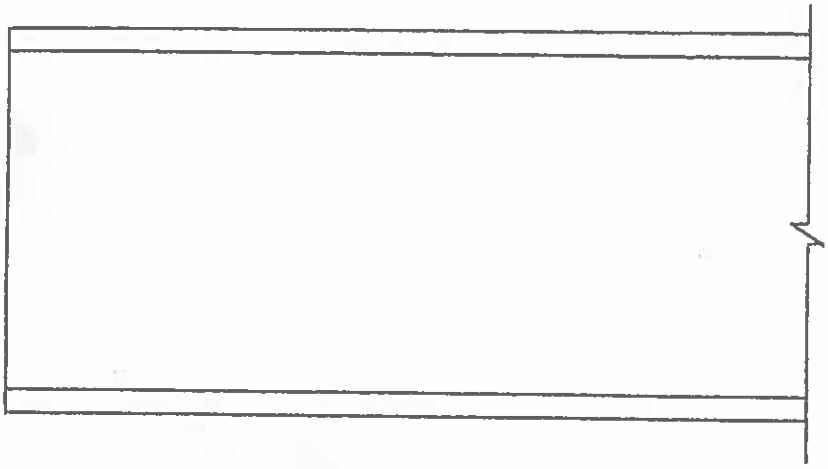

SPAN C, BEAM 1
WEST ELEV. AT P3

REVISION	DATE	CREW	COMPANY	REVISION	DATE	CREW	COMPANY
1				3			
2				4			

Dewberry
59 Elm Street, Suite 101
New Haven, CT 06510

FIELD NOTES

JOB NO.

BRIDGE NO: 03014A

DATE: 7/8/2014

SHEET OF

CREW: RFP, PHH

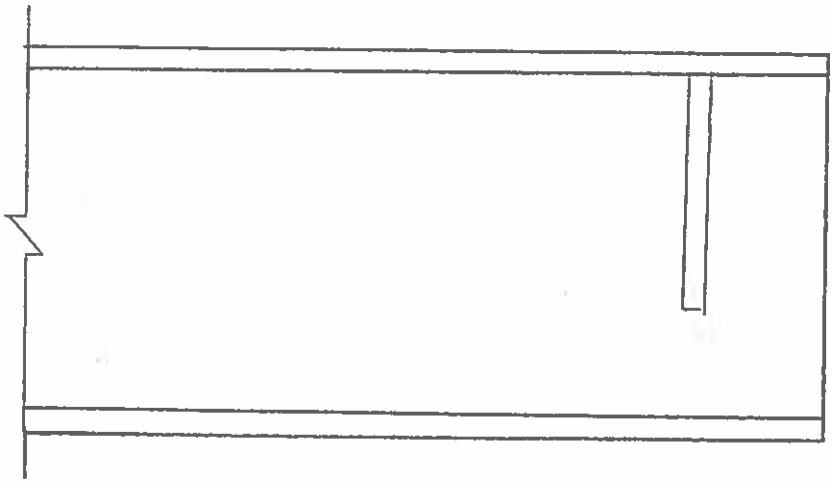

SPAN C, BEAM 2
EAST ELEV. AT P3

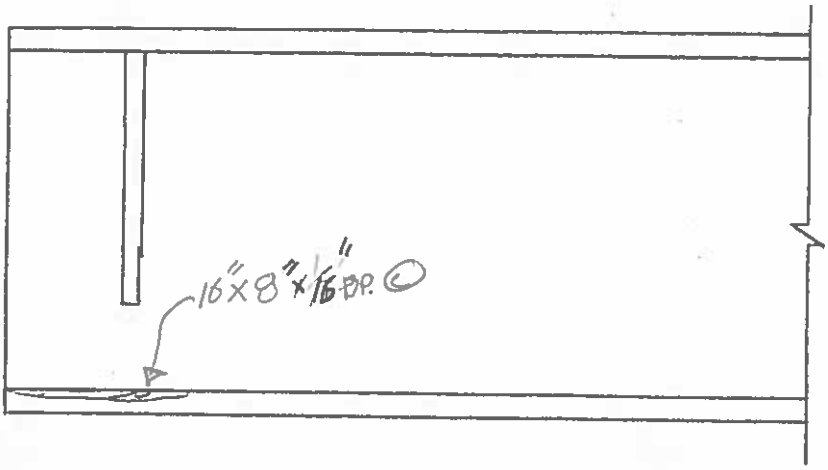

SPAN C, BEAM 2
WEST ELEV. AT P3

REVISION	DATE	CREW	COMPANY	REVISION	DATE	CREW	COMPANY
1				3			
2				4			

Dewberry
59 Elm Street, Suite 101
New Haven, CT 06510

FIELD NOTES

JOB NO.

BRIDGE NO: 03014A

DATE: 7/9/2014

SHEET OF

CREW: RFP, PHH

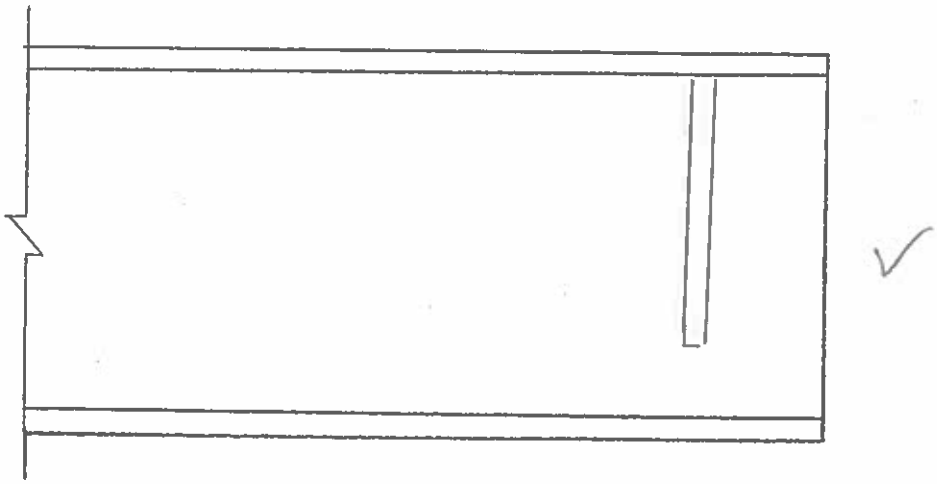

SPAN C, BEAM 3
EAST ELEV. AT P3

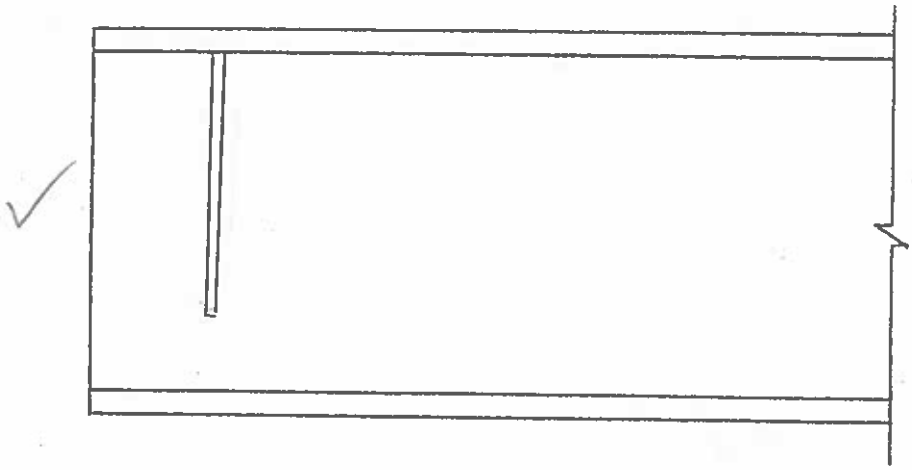

SPAN C, BEAM 3
WEST ELEV. AT P3

REVISION	DATE	CREW	COMPANY	REVISION	DATE	CREW	COMPANY
1				3			
2				4			

Dewberry
59 Elm Street, Suite 101
New Haven, CT 06510

FIELD NOTES

JOB NO.

BRIDGE NO: 03014A

DATE: 7/8/2014

SHEET OF

CREW: RFP, PHH

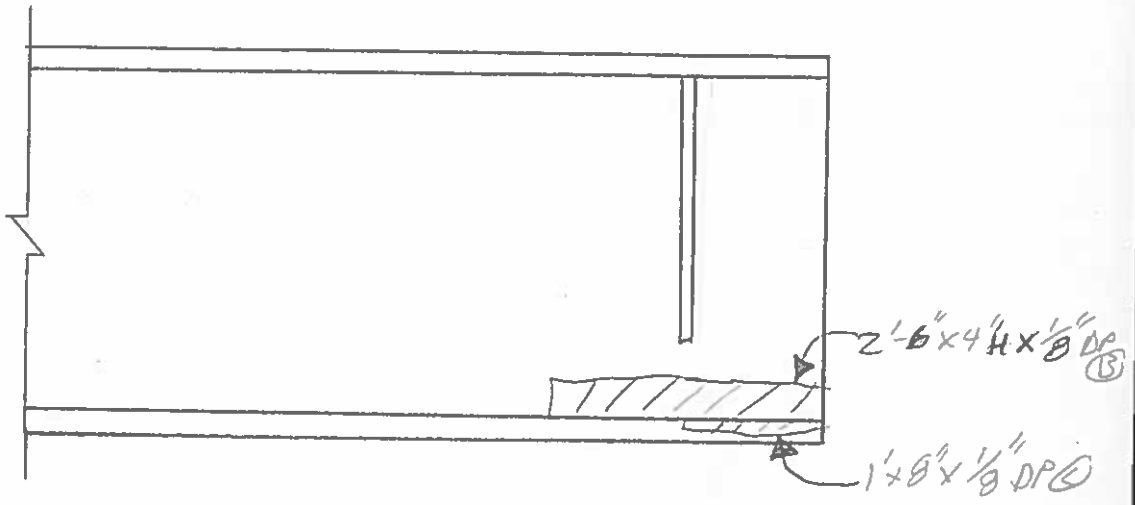

SPAN C, BEAM 4
EAST ELEV. AT P3

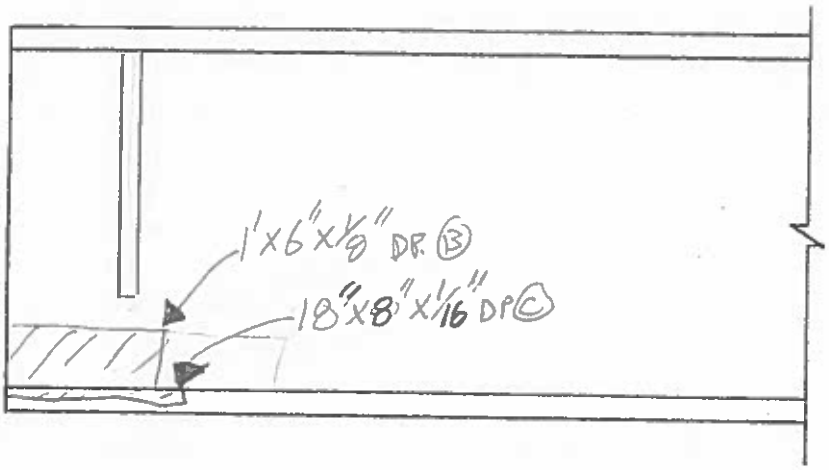

SPAN C, BEAM 4
WEST ELEV. AT P3

REVISION	DATE	CREW	COMPANY	REVISION	DATE	CREW	COMPANY
1				3			
2				4			

Dewberry
59 Elm Street, Suite 101
New Haven, CT 06510

FIELD NOTES	JOB NO.	BRIDGE NO: 03014 A
	DATE: 7/8/2014	SHEET OF
	CREW: RFP, PHH	

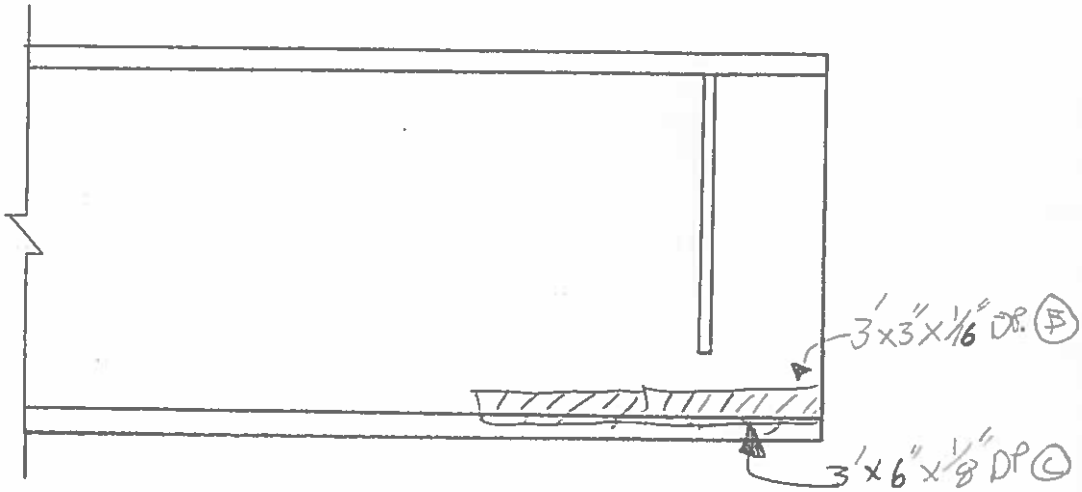

SPAN C, BEAM 5
EAST ELEV. AT P3

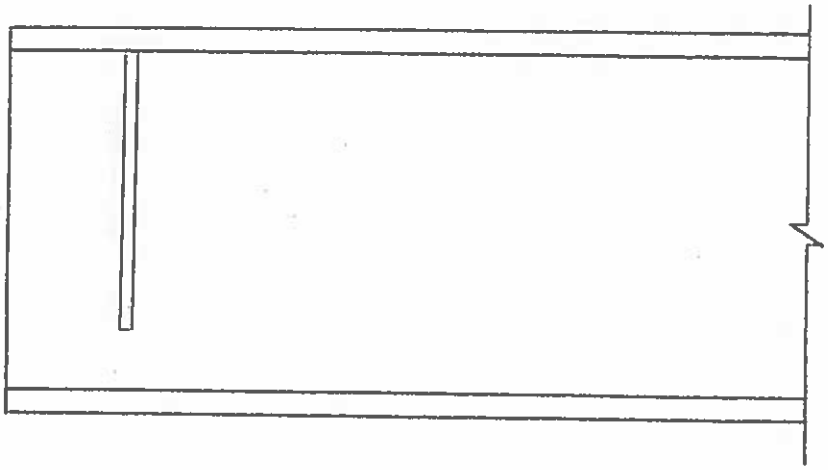

SPAN C, BEAM 5
WEST ELEV. AT P3

REVISION	DATE	CREW	COMPANY	REVISION	DATE	CREW	COMPANY
1				3			
2				4			

Dewberry
59 Elm Street, Suite 101
New Haven, CT 06510

FIELD NOTES

JOB NO.

BRIDGE NO: 03014 A

DATE: 7/8/2014

SHEET OF

CREW: RFP, PHII

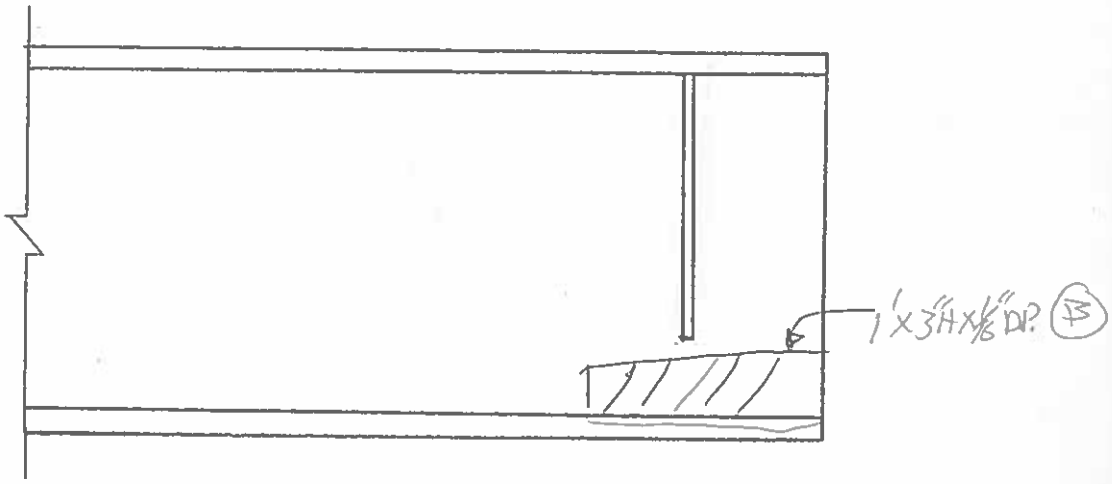

SPAN C, BEAM 6
EAST ELEV. AT P3

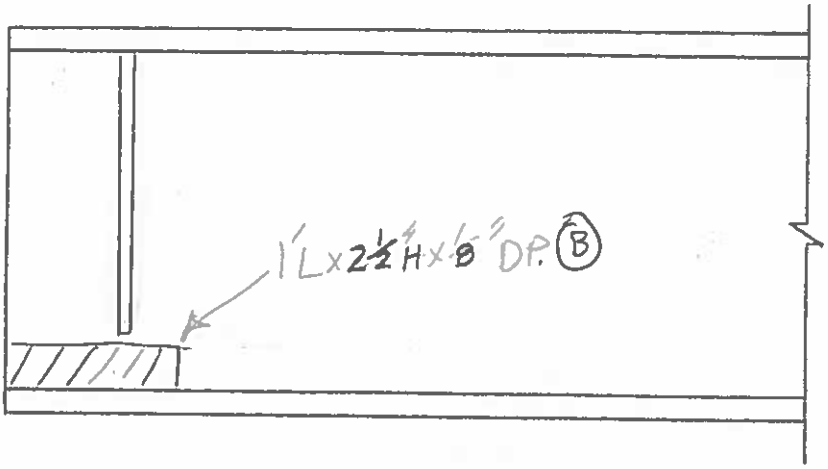

SPAN C, BEAM 6
WEST ELEV. AT P3

REVISION	DATE	CREW	COMPANY	REVISION	DATE	CREW	COMPANY
1				3			
2				4			

Dewberry
59 Elm Street, Suite 101
New Haven, CT 06510

FIELD NOTES

JOB NO.

BRIDGE NO: 03014 A

DATE: 7/8/2014

SHEET OF

CREW: RFP, PHH

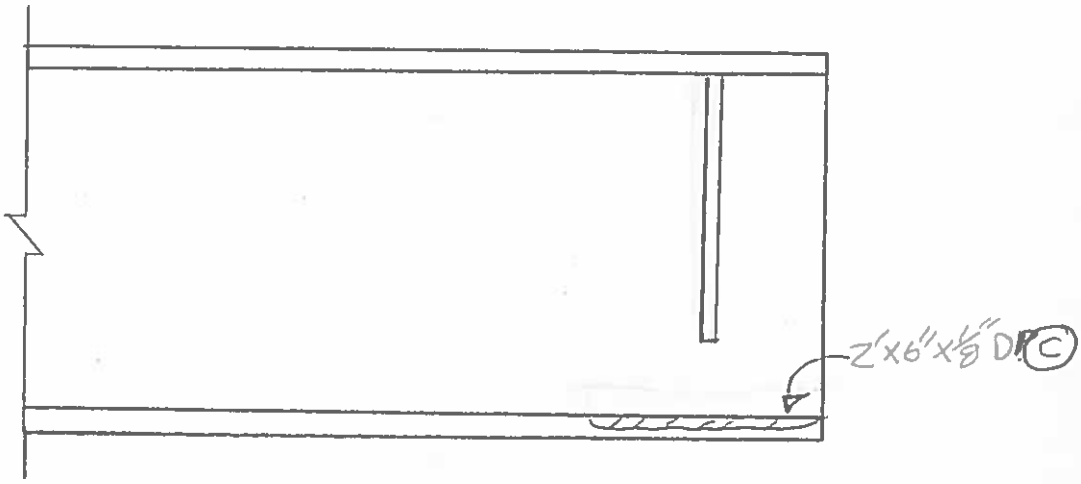

SPAN C, BEAM 7
EAST ELEV. AT P3

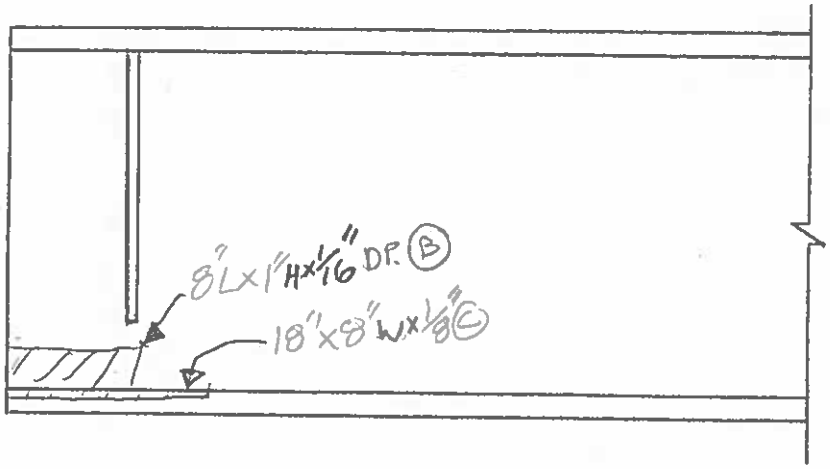

SPAN C, BEAM 7
WEST ELEV. AT P3

REVISION	DATE	CREW	COMPANY	REVISION	DATE	CREW	COMPANY
1				3			
2				4			

Dewberry
59 Elm Street, Suite 101
New Haven, CT 06510

FIELD NOTES

JOB NO.

BRIDGE NO: 03014 A

DATE: 7/8/2014

SHEET OF

CREW: RFP, PHH

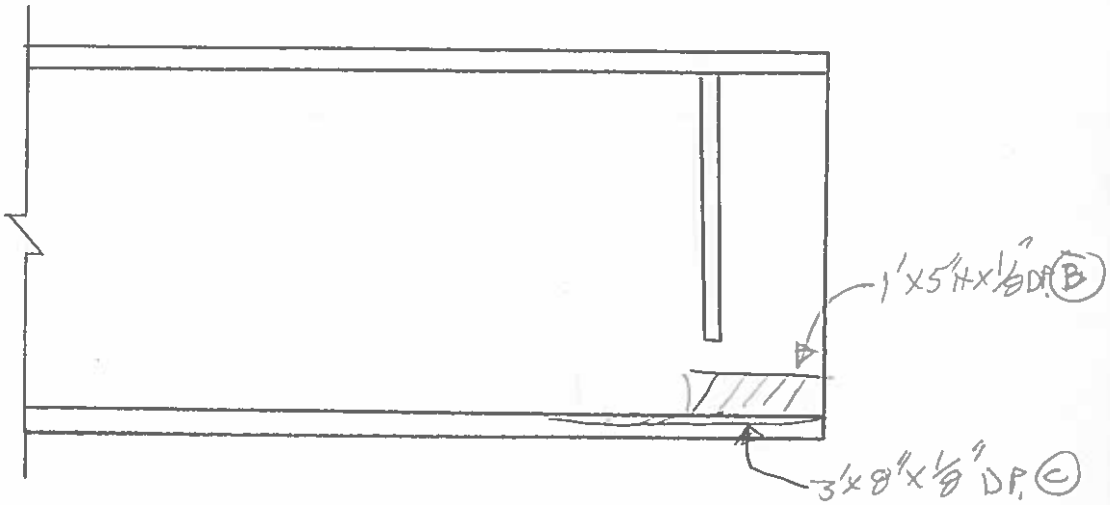

SPAN C, BEAM 8
EAST ELEV. AT P3

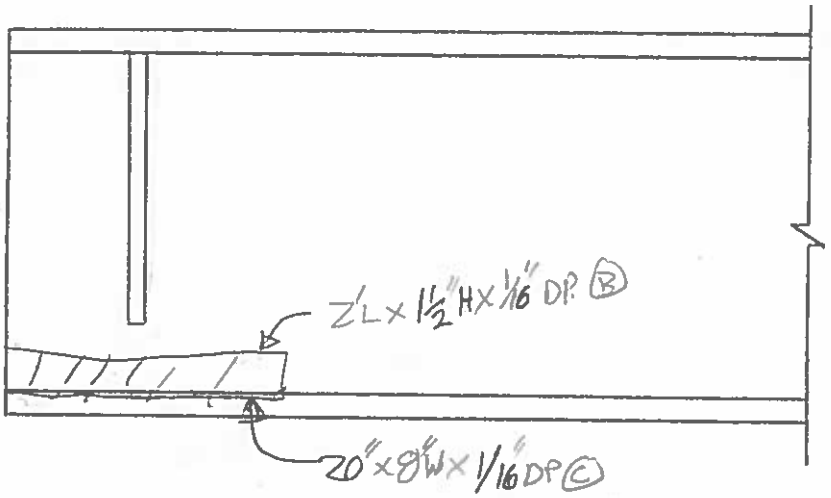

SPAN C, BEAM 8
WEST ELEV. AT P3

REVISION	DATE	CREW	COMPANY	REVISION	DATE	CREW	COMPANY
1				3			
2				4			

Dewberry	FIELD NOTES	JOB NO.	BRIDGE NO: 03014 A
59 Elm Street, Suite 101 New Haven, CT 06510		DATE: 7/8/2014	SHEET OF
		CREW: RFP, PHH	

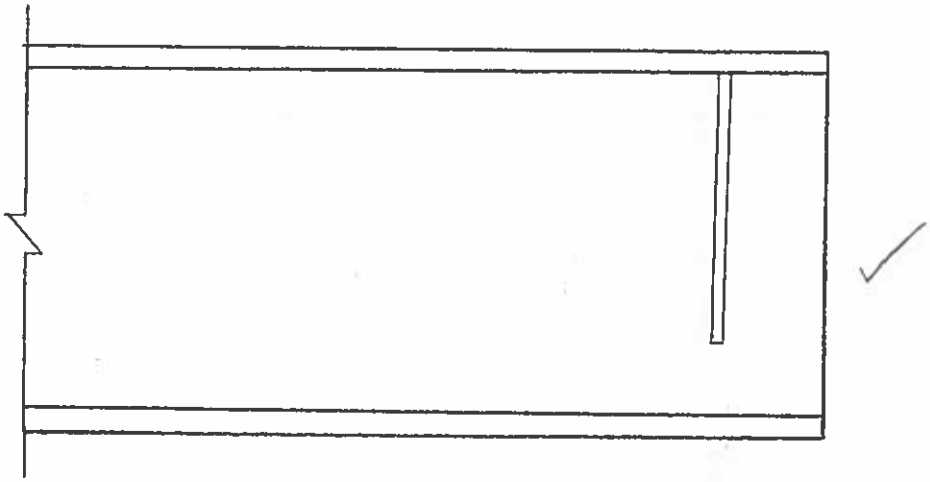

SPAN C, BEAM 9
EAST ELEV. AT P3

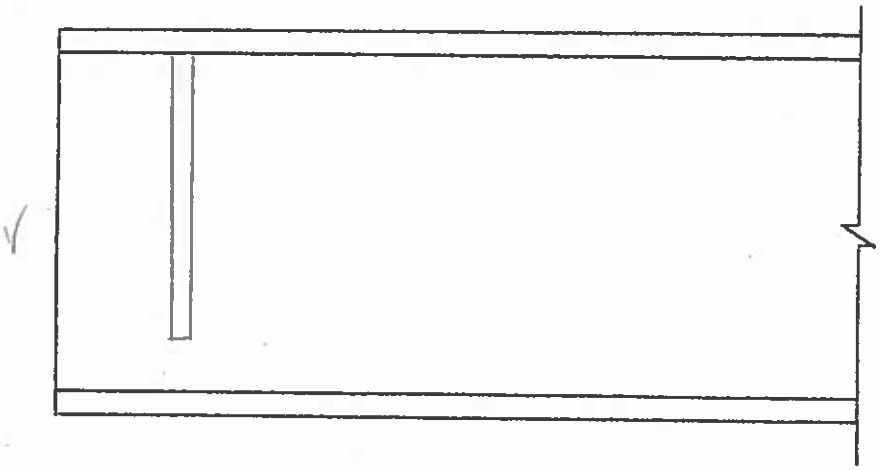

SPAN C, BEAM 9
WEST ELEV. AT P3

REVISION 1	DATE	CREW	COMPANY	REVISION 3	DATE	CREW	COMPANY
REVISION 2	DATE	CREW	COMPANY	REVISION 4	DATE	CREW	COMPANY

Dewberry
59 Elm Street, Suite 101
New Haven, CT 06510

FIELD NOTES

JOB NO.

BRIDGE NO: 03014A

DATE: 6/30/2014

SHEET OF

CREW: RFP, PHH

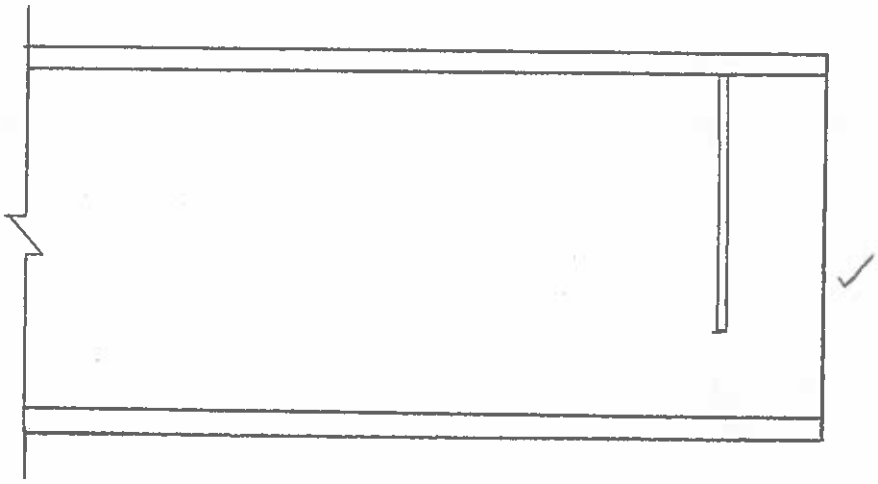

SPAN C, BEAM 10
EAST ELEV. AT P3

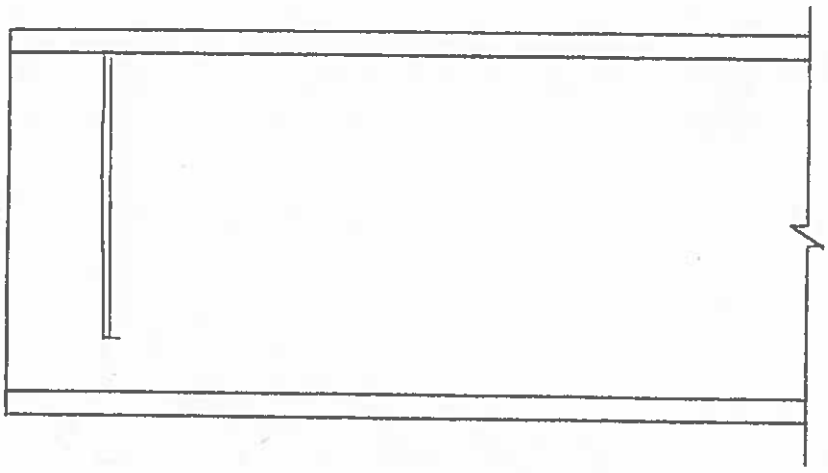

SPAN C, BEAM 10
WEST ELEV. AT P3

REVISION	DATE	CREW	COMPANY	REVISION	DATE	CREW	COMPANY
1				3			
2				4			

Dewberry	FIELD NOTES	JOB NO.	BRIDGE NO: 03014 A
59 Elm Street, Suite 101 New Haven, CT 06510		DATE: 6/30/2014	SHEET OF
		CREW: RFP, SHH	

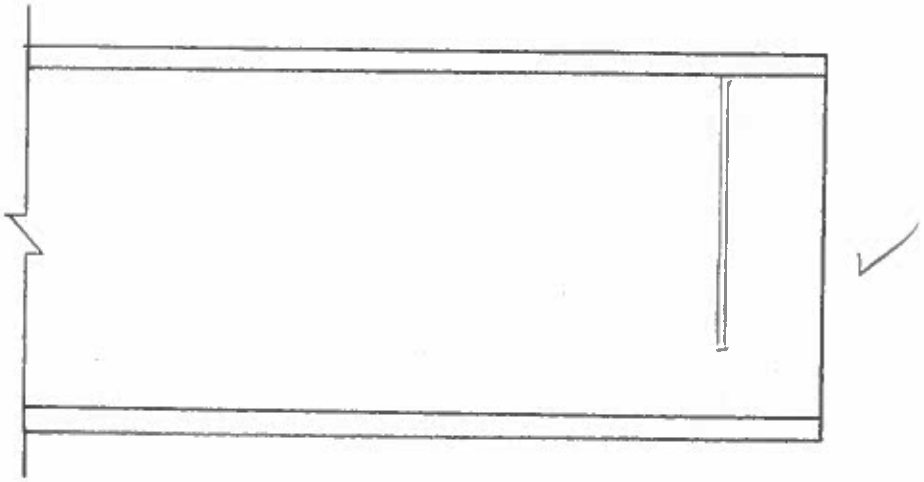

SPAN C, BEAM 11
EAST ELEV. AT P3

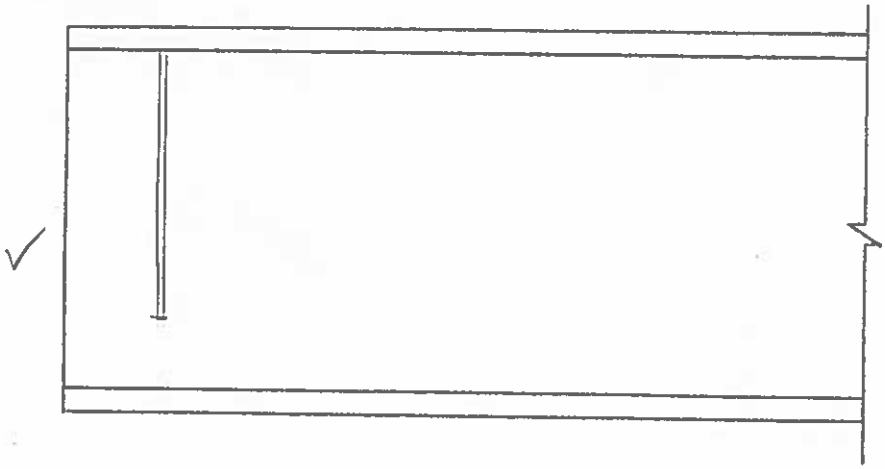

SPAN C, BEAM 11
WEST ELEV. AT P3

REVISION 1	DATE	CREW	COMPANY	REVISION 3	DATE	CREW	COMPANY
REVISION 2	DATE	CREW	COMPANY	REVISION 4	DATE	CREW	COMPANY

Dewberry
59 Elm Street, Suite 101
New Haven, CT 06510

FIELD NOTES

JOB NO.

BRIDGE NO: 03014A

DATE: 6/30/2014

SHEET OF

CREW: RFP, PHH

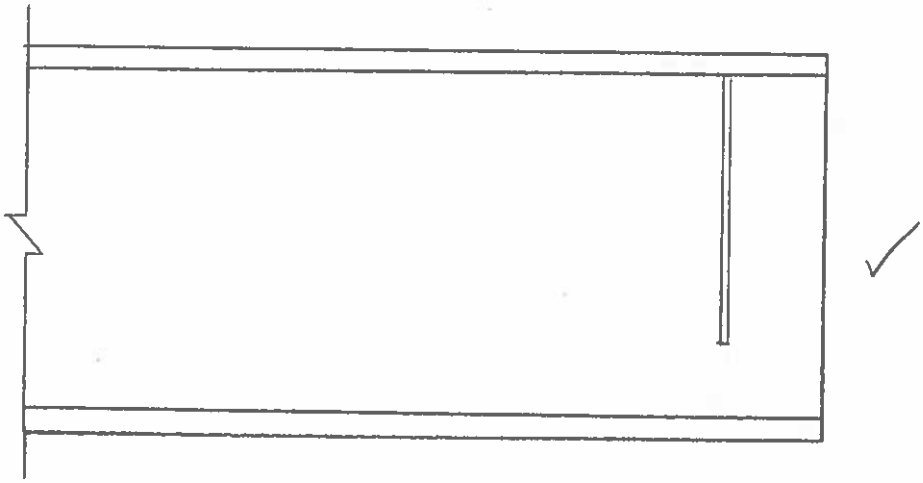

SPAN C, BEAM 12
EAST ELEV. AT P3

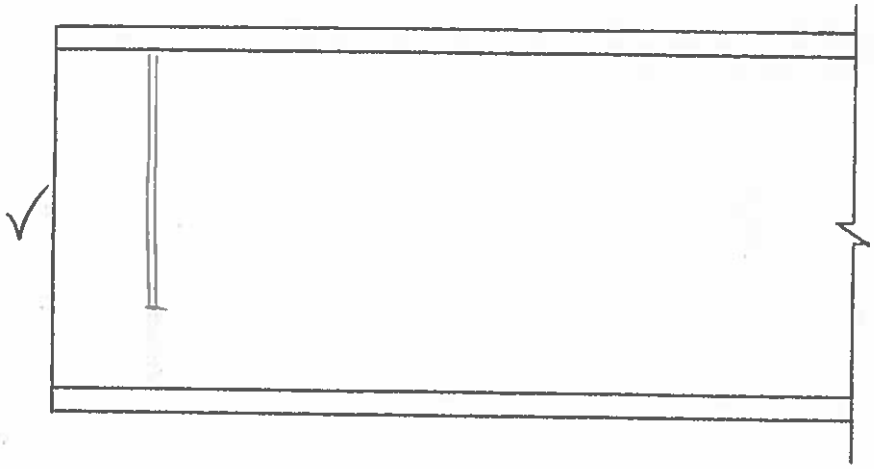

SPAN C, BEAM 12
WEST ELEV. AT P3

REVISION	DATE	CREW	COMPANY	REVISION	DATE	CREW	COMPANY
1				3			
2				4			

Dewberry
59 Elm Street, Suite 101
New Haven, CT 06510

FIELD NOTES

JOB NO.

BRIDGE NO: 03014 A

DATE: 6/30/2014

SHEET OF

CREW: RFD, PHH

D WEB TILTED 1/4" WEST OVER 2'

6 NO SECTION LOSS

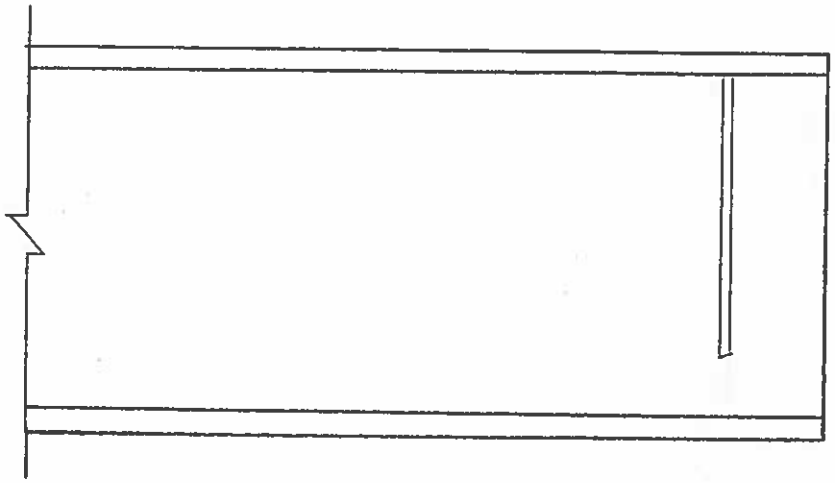

SPAN 6, BEAM 13
EAST ELEV. AT P3

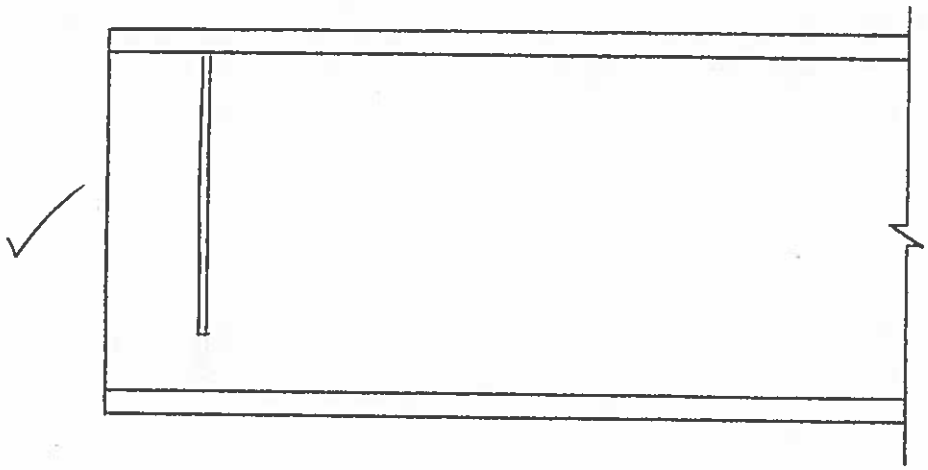

SPAN 6, BEAM 13
WEST ELEV. AT P3

REVISION	DATE	CREW	COMPANY	REVISION	DATE	CREW	COMPANY
1				3			
2				4			

Dewberry® 59 Elm Street, Suite 101 New Haven, CT 06510	FIELD NOTES	JOB NO.	BRIDGE NO: 03014 A
		DATE: 6/30/17	SHEET OF
		CREW: RFP, PHH	

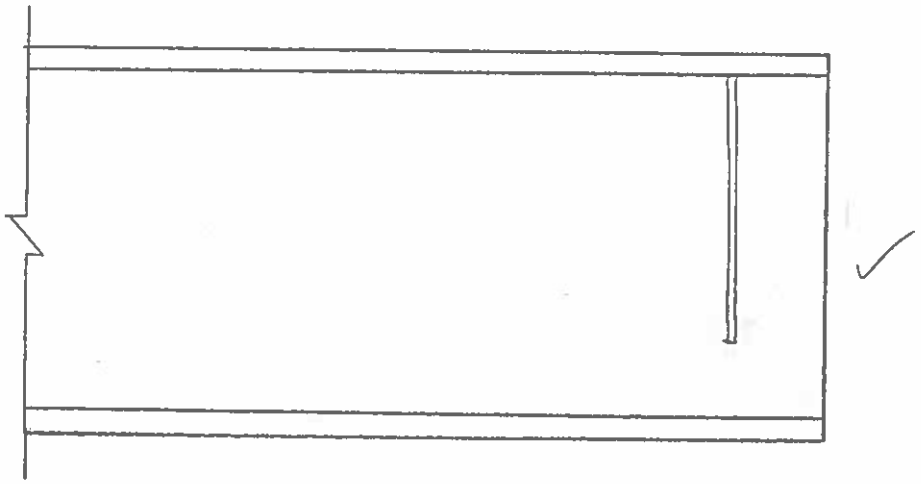

SPAN C, BEAM 14
EAST ELEV. AT P3

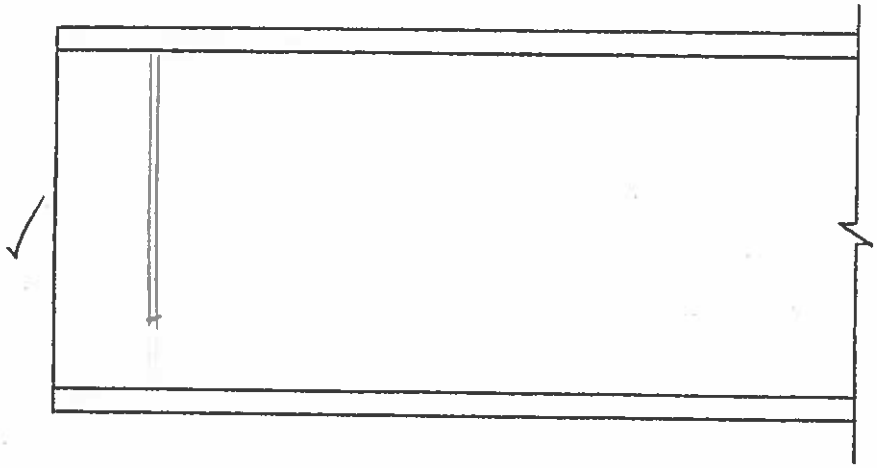

SPAN C, BEAM 14
WEST ELEV. AT P3

REVISION 1	DATE	CREW	COMPANY	REVISION 3	DATE	CREW	COMPANY
REVISION 2	DATE	CREW	COMPANY	REVISION 4	DATE	CREW	COMPANY

Dewberry
59 Elm Street, Suite 101
New Haven, CT 06510

FIELD NOTES

JOB NO.

BRIDGE NO: 03014A

DATE: 6/30/2014

SHEET OF

CREW: RFP, PHH

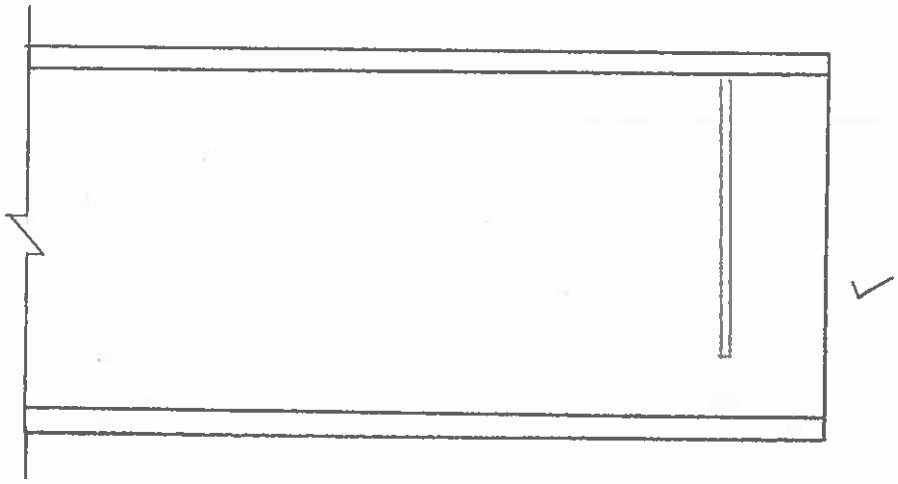

SPAN C, BEAM 15
EAST ELEV. AT P3

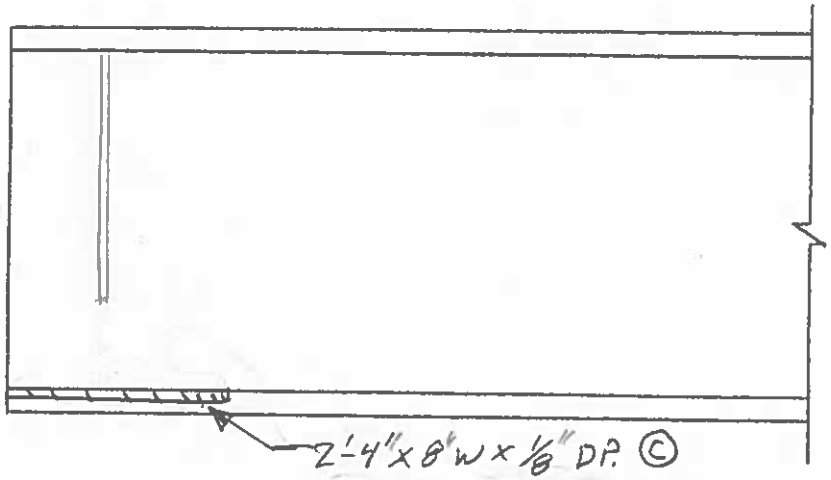

SPAN C, BEAM 15
WEST ELEV. AT P3

REVISION	DATE	CREW	COMPANY	REVISION	DATE	CREW	COMPANY
1				3			
2				4			

Dewberry	FIELD NOTES	JOB NO.	BRIDGE NO: 03014 A
59 Elm Street, Suite 101 New Haven, CT 06510		DATE: 6/30/2014	SHEET OF
		CREW: RPP, PHH	

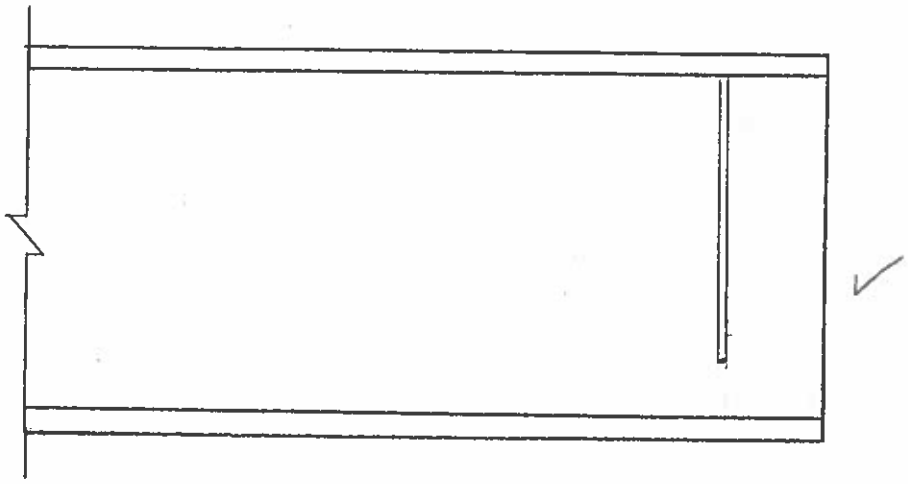

SPAN C, BEAM 16
EAST ELEV. AT P3

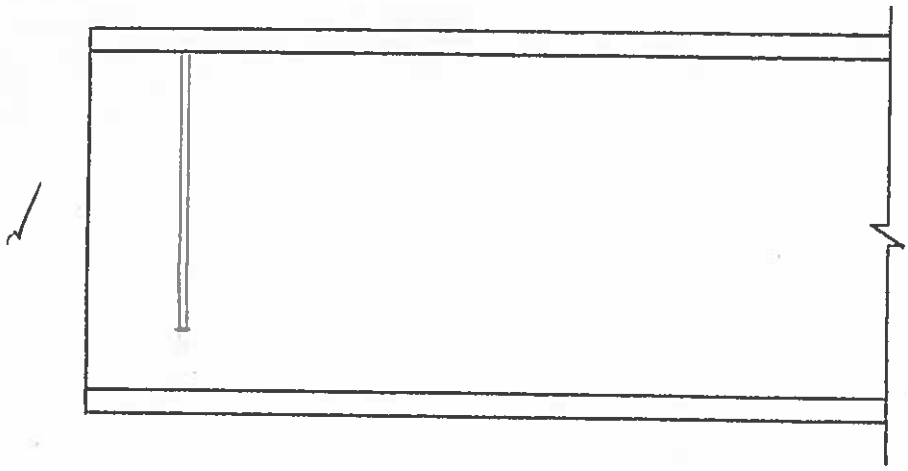

SPAN C, BEAM 16
WEST ELEV. AT P3

REVISION 1	DATE	CREW	COMPANY	REVISION 3	DATE	CREW	COMPANY
REVISION 2	DATE	CREW	COMPANY	REVISION 4	DATE	CREW	COMPANY

Dewberry
59 Elm Street, Suite 101
New Haven, CT 06510

FIELD NOTES

JOB NO.

BRIDGE NO: 03014A

DATE: 6/30/2014

SHEET OF

CREW: RFP, PHH

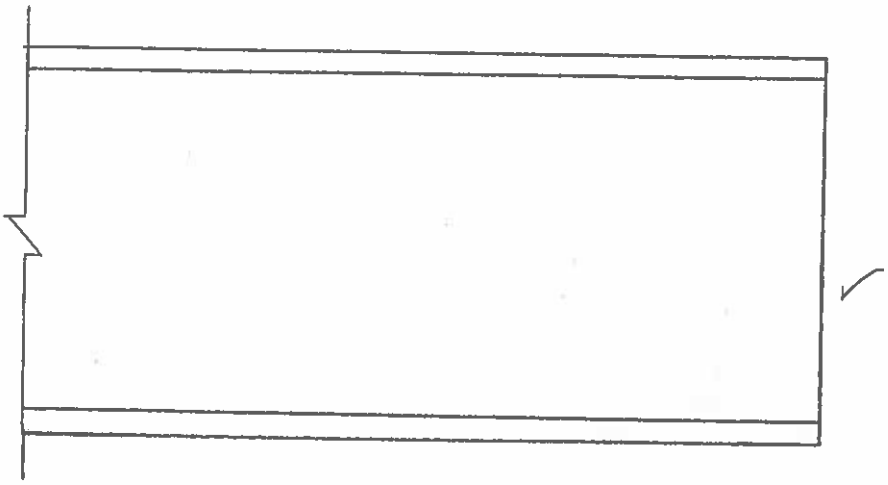

SPAN C, BEAM 17
EAST ELEV. AT P3

* HEAVY SURFACE RUST

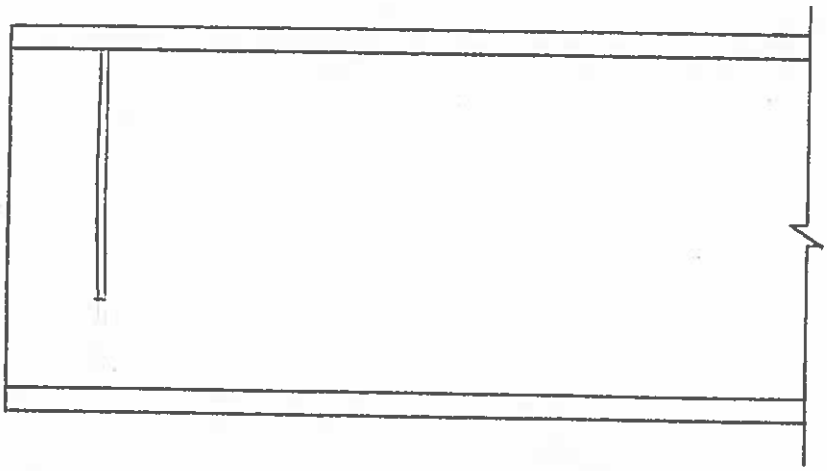

SPAN C, BEAM 17
WEST ELEV. AT P3

REVISION	DATE	CREW	COMPANY	REVISION	DATE	CREW	COMPANY
1				3			
2				4			

Dewberry® 59 Elm Street, Suite 101 New Haven, CT 06510	FIELD NOTES	JOB NO.	BRIDGE NO: 03014A
		DATE: 7/8/14	SHEET OF
		CREW: RFP, PHH	

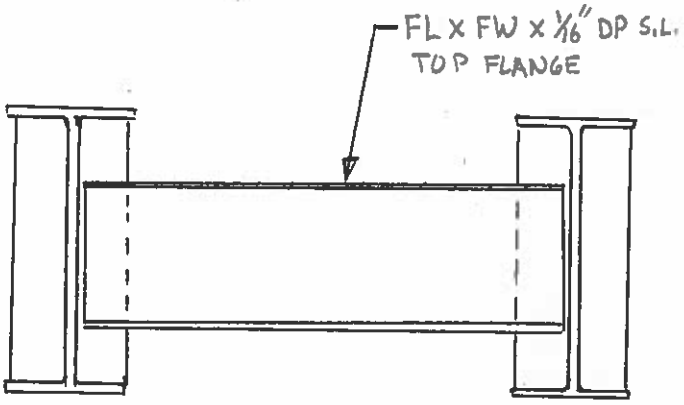

BAY 3 END DIAPHRAGM

SPAN C @ P2

REVISION 1	DATE	CREW	COMPANY	REVISION 3	DATE	CREW	COMPANY
REVISION 2	DATE	CREW	COMPANY	REVISION 4	DATE	CREW	COMPANY

Dewberry	FIELD NOTES	JOB NO.	BRIDGE NO: 03014A
59 Elm Street, Suite 101 New Haven, CT 06510		DATE: 7/8/14	SHEET OF
		CREW: RFP, PHN	

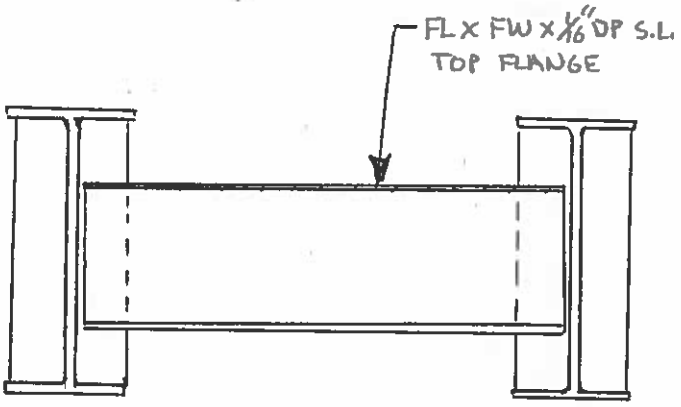

BAY 7 END DIAPHRAGM

SPAN C @ P2

REVISION 1	DATE	CREW	COMPANY	REVISION 3	DATE	CREW	COMPANY
REVISION 2	DATE	CREW	COMPANY	REVISION 4	DATE	CREW	COMPANY

Dewberry® 59 Elm Street, Suite 101 New Haven, CT 06510	FIELD NOTES	JOB NO.	BRIDGE NO: 03014A
		DATE: 7/8/14	SHEET OF
		CREW: RFP, PHH	

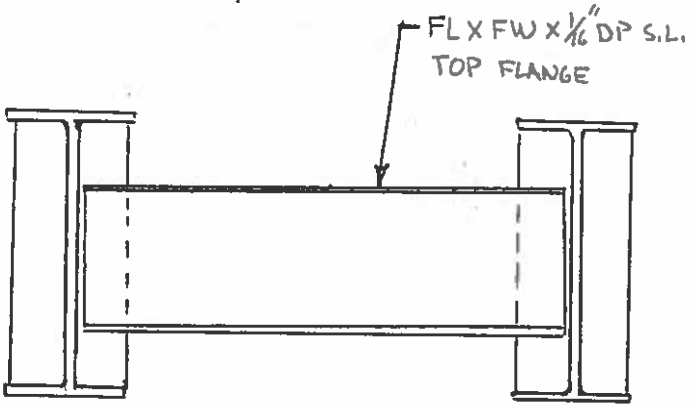

BAY 8 END DIAPHRAGM

SPAN C @ P2

REVISION 1	DATE	CREW	COMPANY	REVISION 3	DATE	CREW	COMPANY
REVISION 2	DATE	CREW	COMPANY	REVISION 4	DATE	CREW	COMPANY

Dewberry
59 Elm Street, Suite 101
New Haven, CT 06510

FIELD NOTES	JOB NO.	BRIDGE NO: 03014A
	DATE: 6/30/14	SHEET OF
	CREW: RFP, PHH	

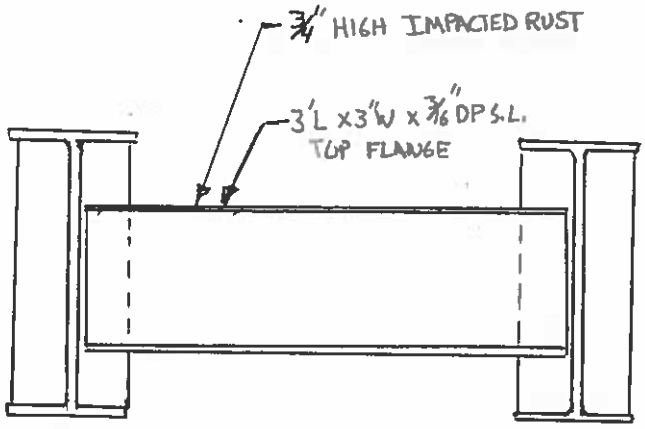

• SEE INSPECTION PHOTO 95.

BAY 16 END DIAPHAGM

SPAN C @ P2

REVISION 1	DATE	CREW	COMPANY	REVISION 3	DATE	CREW	COMPANY
REVISION 2	DATE	CREW	COMPANY	REVISION 4	DATE	CREW	COMPANY

Dewberry® 59 Elm Street, Suite 101 New Haven, CT 06510	FIELD NOTES	JOB NO.	BRIDGE NO: 03014 A
		DATE: 7/8/14	SHEET OF
		CREW: RFP, PHH	

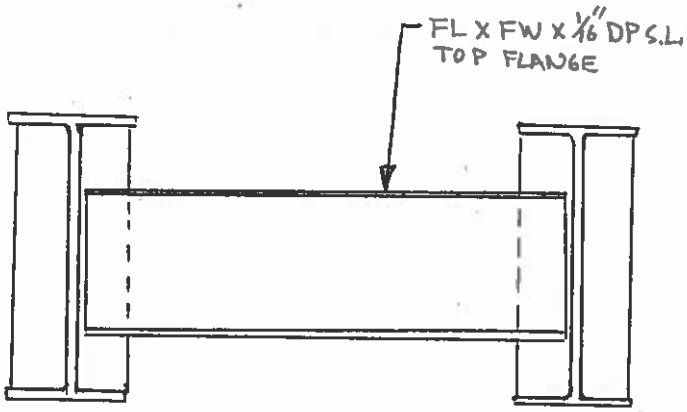

BAY 5 END DIAPHRAGM

SPAN C @ P3

REVISION 1	DATE	CREW	COMPANY	REVISION 3	DATE	CREW	COMPANY
REVISION 2	DATE	CREW	COMPANY	REVISION 4	DATE	CREW	COMPANY

Dewberry	FIELD NOTES	JOB NO.	BRIDGE NO: 03014 A
59 Elm Street, Suite 101 New Haven, CT 06510		DATE: 7/9/14	SHEET OF
		CREW: RFP, PHH	

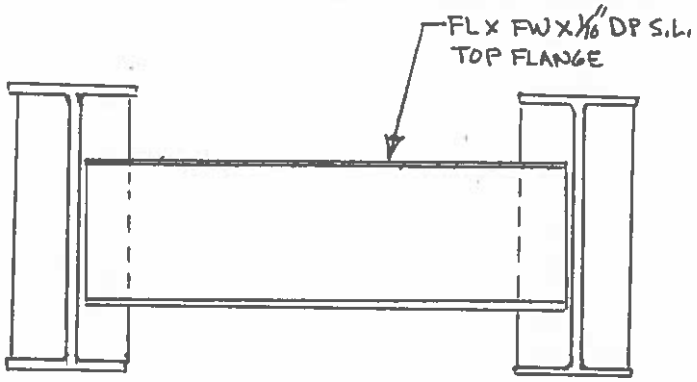

BAY 6 END DIAPHAGM

SPAN C @ P3

REVISION 1 DATE	CREW	COMPANY	REVISION 3 DATE	CREW	COMPANY
REVISION 2 DATE	CREW	COMPANY	REVISION 4 DATE	CREW	COMPANY

Dewberry® 59 Elm Street, Suite 101 New Haven, CT 06510	FIELD NOTES	JOB NO.	BRIDGE NO: 03014 A
		DATE: 7/6/14	SHEET OF
		CREW: RFP, PHH	

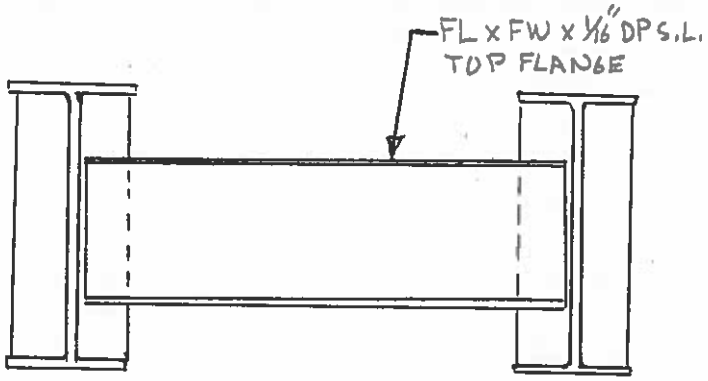

BAY 7 END DIAPHAGM

SPAN C @ P3

REVISION 1 DATE	CREW	COMPANY	REVISION 3 DATE	CREW	COMPANY
REVISION 2 DATE	CREW	COMPANY	REVISION 4 DATE	CREW	COMPANY

Dewberry
59 Elm Street, Suite 101
New Haven, CT 06510

FIELD NOTES	JOB NO.	BRIDGE NO: 03014 A
	DATE: 7/8/14	SHEET OF
	CREW: RFP, PHH	

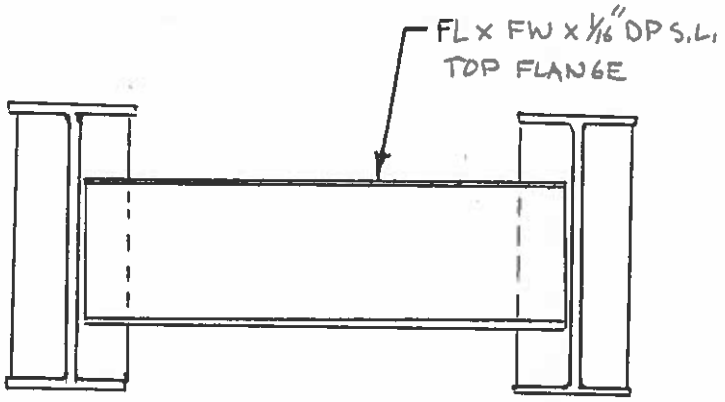

BAY 8 END DIAPHRAGM

SPAN C @ P3

REVISION 1	DATE	CREW	COMPANY	REVISION 3	DATE	CREW	COMPANY
REVISION 2	DATE	CREW	COMPANY	REVISION 4	DATE	CREW	COMPANY

Dewberry	FIELD NOTES	JOB NO.	BRIDGE NO: 03014 A
59 Elm Street, Suite 101 New Haven, CT 06510		DATE: 6/30/14	SHEET OF
		CREW: RFP, PHH	

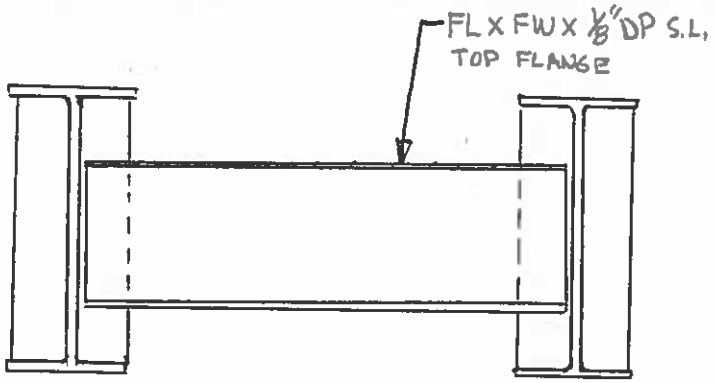

BAY 14 END DIAPHRAGM

SPAN C @ P3

REVISION 1	DATE	CREW	COMPANY	REVISION 3	DATE	CREW	COMPANY
REVISION 2	DATE	CREW	COMPANY	REVISION 4	DATE	CREW	COMPANY

Dewberry® 59 Elm Street, Suite 101 New Haven, CT 06510	FIELD NOTES	JOB NO.	BRIDGE NO: 03014A
		DATE: 6/30/14	SHEET OF
		CREW: RFP, PHH	

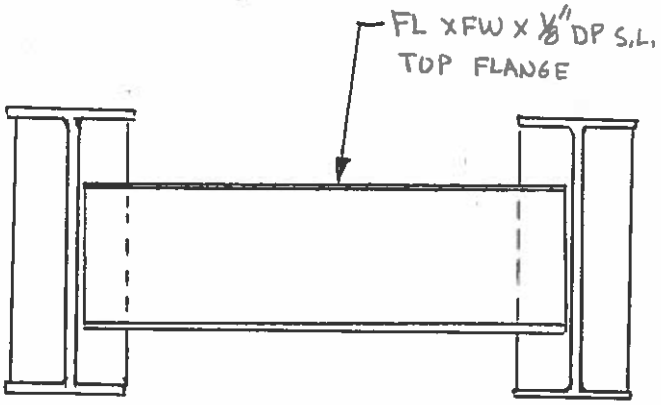

BAY 16 END DIAPHRAGM

SPAN C @ P3

REVISION 1	DATE	CREW	COMPANY	REVISION 3	DATE	CREW	COMPANY
REVISION 2	DATE	CREW	COMPANY	REVISION 4	DATE	CREW	COMPANY

SPAN D

FIELD NOTES

PREPARED BY: Garg Consulting Services, Inc.

PROJ. NO. 170-3013

BRIDGE NO. 3014A

DATE: 11/03/2010

SHEET 5/47

CREW: PDG, MD, SN, GF

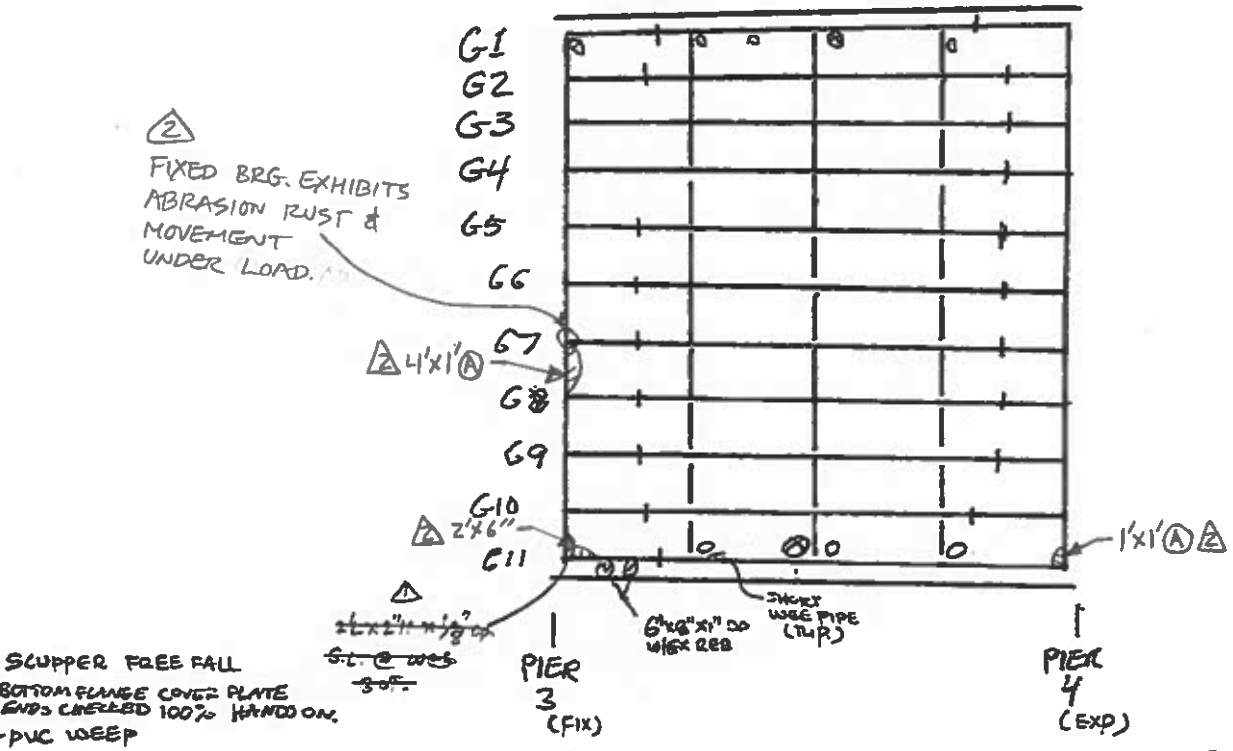

⊗ SCUPPER FREE FALL

— BOTTOM FLANGE COVER PLATE ENDS CHECKED 100% HANDS ON.

o – PVC WEEP

LEGEND

- HOLLOW AREA
- SHALLOW REBAR
- SPALL AREA
- SPALL AREA WITH EXPOSED REBAR
- MAP CRACKS OR HAIRLINE MAP CRACKS
- HAIRLINE CRACKS (HLC) OR CRACKS (CR)
- HONEY COMB AREA
- SCALE AREA (HVY, MED, OR LT)

GENERAL NOTES

- SEE SPAN A GENERAL NOTES.
- SHORT PVC WEEP PIPES IN BAY 10 DO NOT DRAIN ON TO GIRDER.
- FASCIA GIRDERS HAVE 100% AREA OF PAINT PEELED OFF W/LT RUST

FRAMING PLAN SPAN D

2 SEE DETAIL SHEETS FOR MORE INFORMATION

Revision	Date	Crew	Company
1	9/9/12	PKG, AKC.	GM2
2	7/1/14 & 7/8/14	RFP, PHH	DEW

Dewberry
59 Elm Street, Suite 101
New Haven, CT 06510

FIELD NOTES

JOB NO.

BRIDGE NO: 03014A

DATE: 7/8/2014

SHEET OF

CREW: RFP, PHH

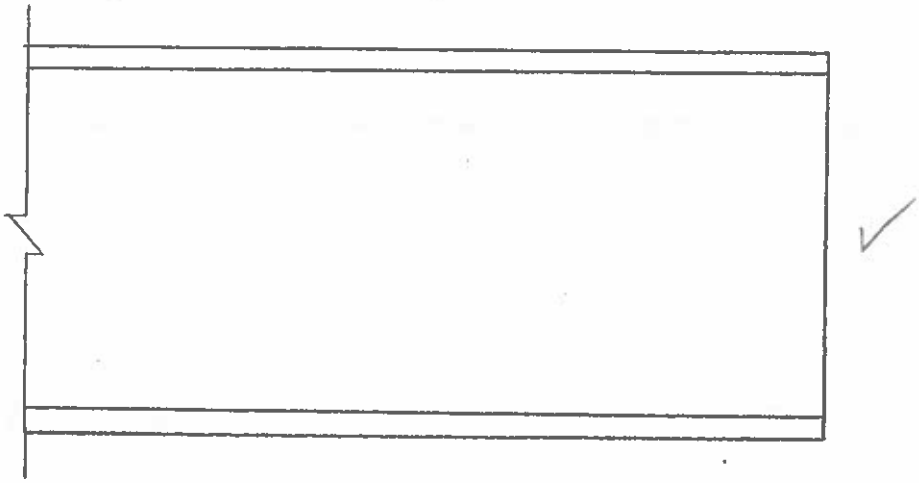

SPAN D, BEAM 1
WEST ELEV. AT P3

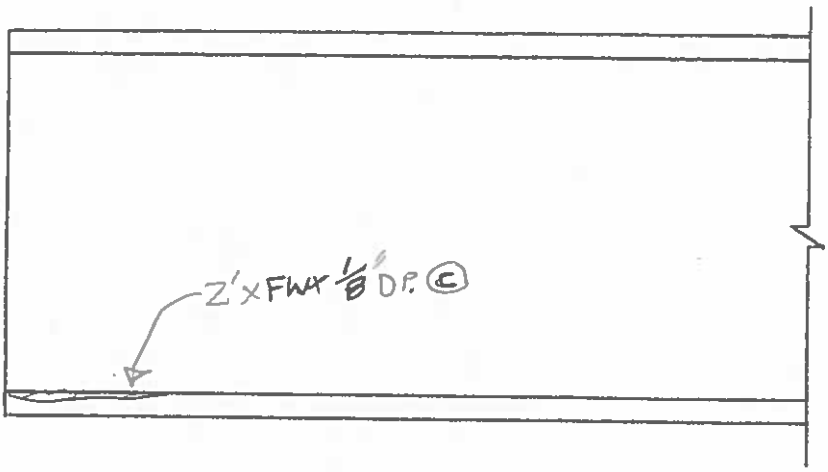

SPAN D, BEAM 1
EAST ELEV. AT P3

REVISION	DATE	CREW	COMPANY	REVISION	DATE	CREW	COMPANY
1				3			
2				4			

Dewberry
59 Elm Street, Suite 101
New Haven, CT 06510

FIELD NOTES

JOB NO.

BRIDGE NO: 03014A

DATE: 7/8/2014

SHEET OF

CREW: RFP, PHH

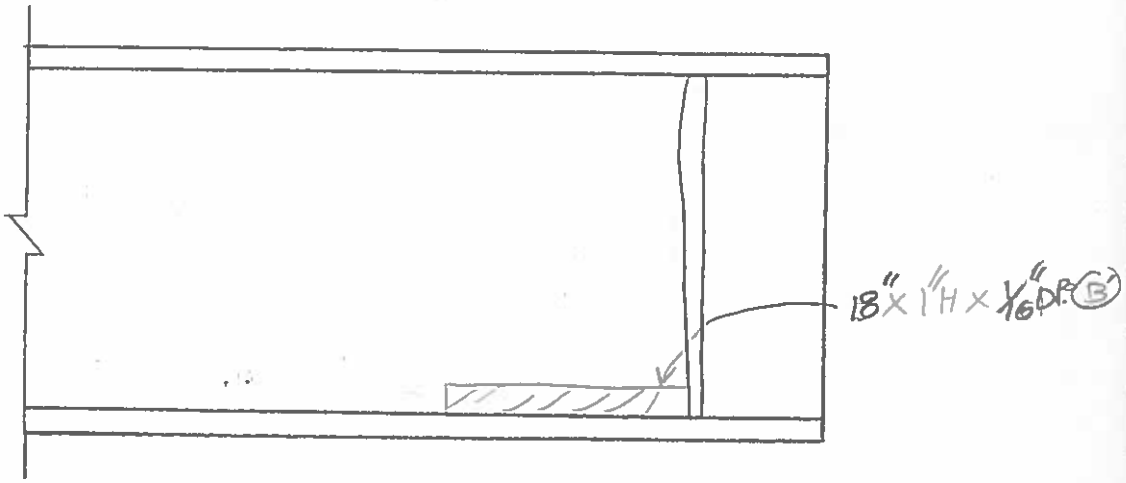

SPAN D, BEAM 2
WEST ELEV. AT P3

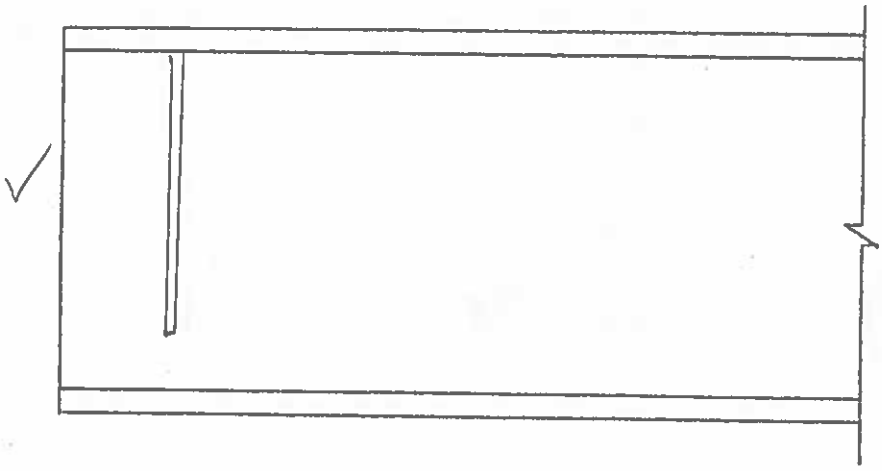

SPAN D, BEAM 2
EAST ELEV. AT P3

REVISION	DATE	CREW	COMPANY	REVISION	DATE	CREW	COMPANY
1				3			
2				4			

Dewberry
59 Elm Street, Suite 101
New Haven, CT 06510

FIELD NOTES	JOB NO.	BRIDGE NO: 03014 A
	DATE: 7/8/2014	SHEET OF
	CREW: RFP, PHH	

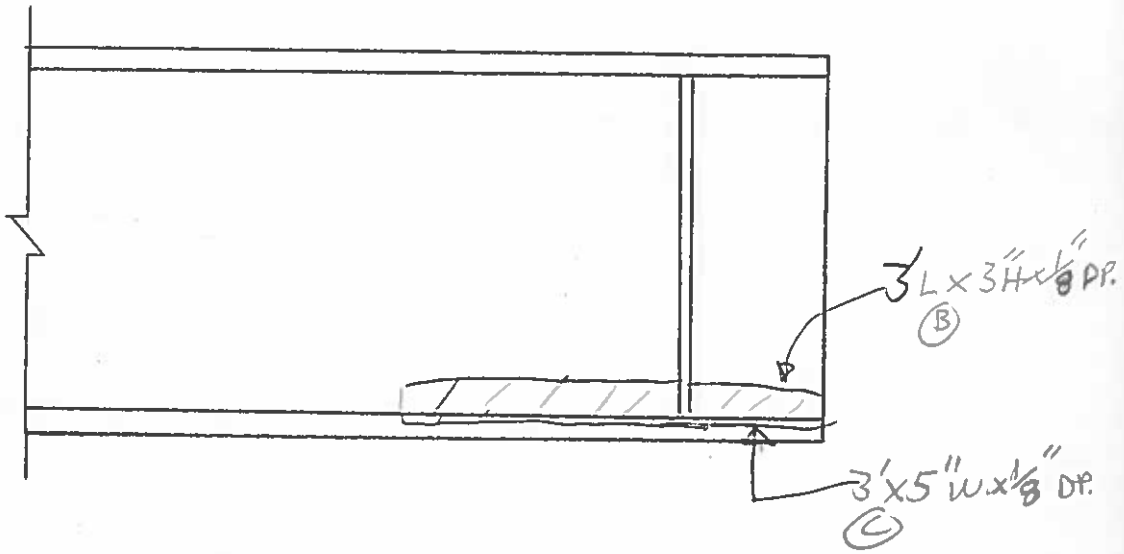

SPAN D, BEAM 3
WEST ELEV. AT P3

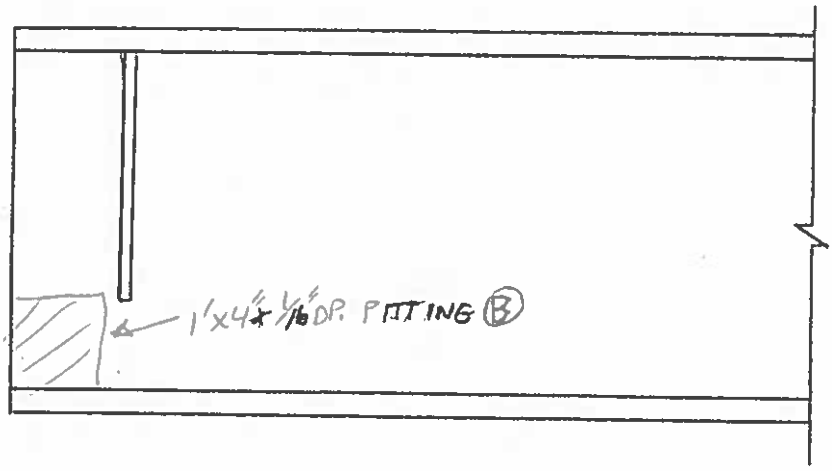

SPAN D, BEAM 3
EAST ELEV. AT P3

REVISION	DATE	CREW	COMPANY	REVISION	DATE	CREW	COMPANY
1				3			
2				4			

Dewberry
59 Elm Street, Suite 101
New Haven, CT 06510

FIELD NOTES	JOB NO.	BRIDGE NO: 03014 A
	DATE: 7/8/2014	SHEET OF
	CREW: RFP, PHH	

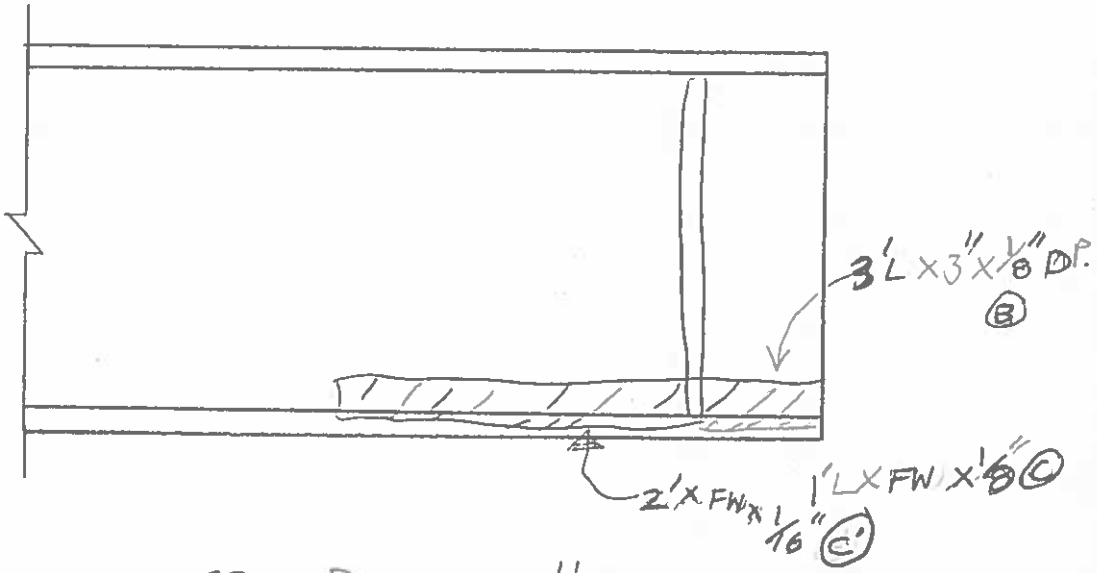

SPAN D, BEAM 4
WEST ELEV. AT P3

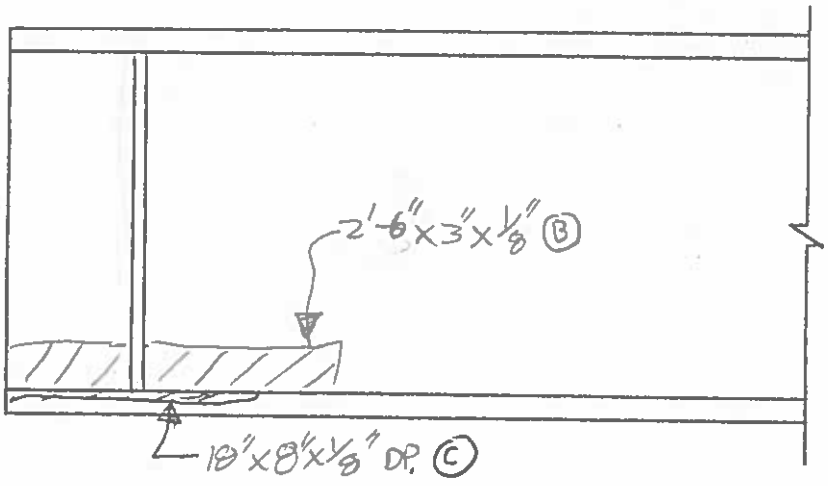

SPAN D, BEAM 4
EAST ELEV. AT P3

REVISION 1	DATE	CREW	COMPANY	REVISION 3	DATE	CREW	COMPANY
REVISION 2	DATE	CREW	COMPANY	REVISION 4	DATE	CREW	COMPANY

Dewberry
59 Elm Street, Suite 101
New Haven, CT 06510

FIELD NOTES

JOB NO.

BRIDGE NO: 03014 A

DATE: 7/8/2014

SHEET OF

CREW: RFP, PHH

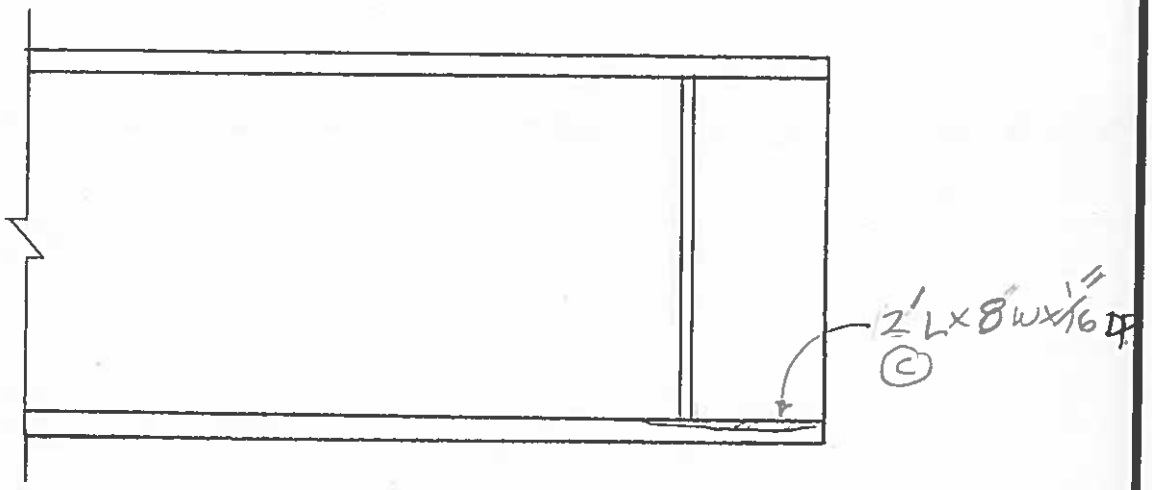

SPAN D, BEAM 5
WEST ELEV. AT P3

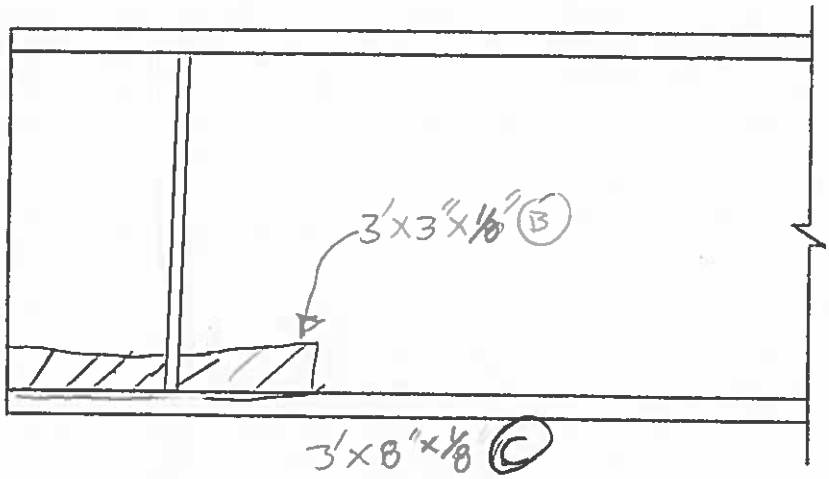

SPAN D, BEAM 5
EAST ELEV. AT P3

REVISION 1	DATE	CREW	COMPANY	REVISION 3	DATE	CREW	COMPANY
REVISION 2	DATE	CREW	COMPANY	REVISION 4	DATE	CREW	COMPANY

Dewberry
59 Elm Street, Suite 101
New Haven, CT 06510

FIELD NOTES

JOB NO.

BRIDGE NO: 03014A

DATE: 7/8/2014

SHEET OF

CREW: RFP, PHH

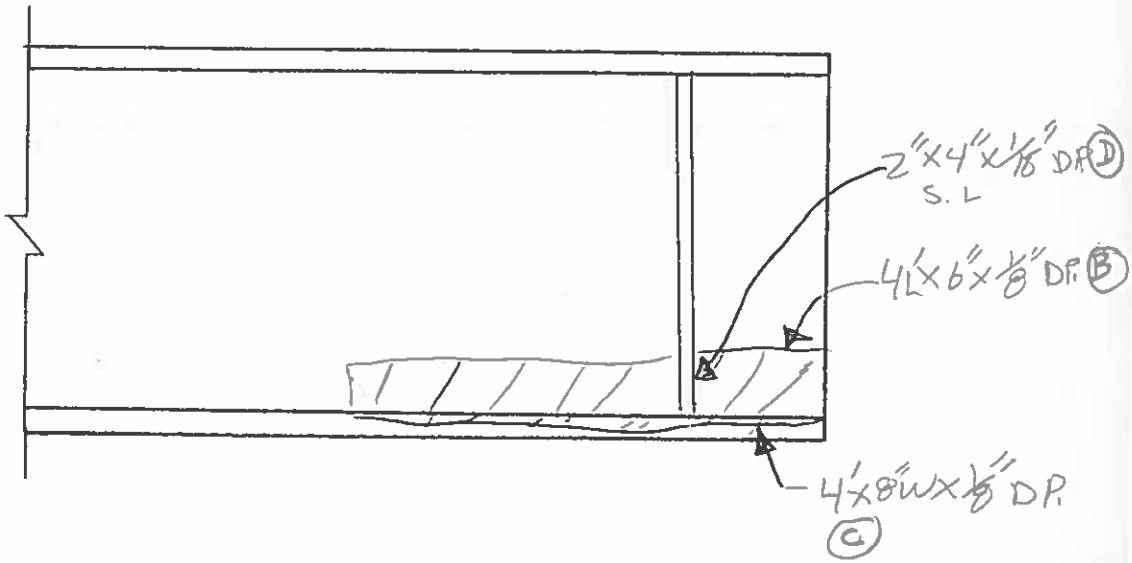

SPAN D, BEAM 6
WEST ELEV. AT P3

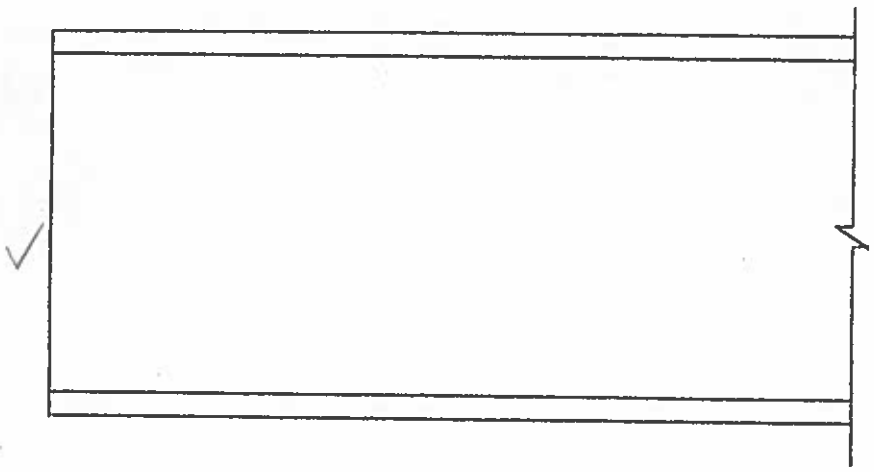

SPAN D, BEAM 6
EAST ELEV. AT P3

REVISION	DATE	CREW	COMPANY	REVISION	DATE	CREW	COMPANY
1				3			
2				4			

Dewberry
59 Elm Street, Suite 101
New Haven, CT 06510

FIELD NOTES

JOB NO.

BRIDGE NO: 03014 A

DATE: 7/1/2014

SHEET OF

CREW: RFP, PHH

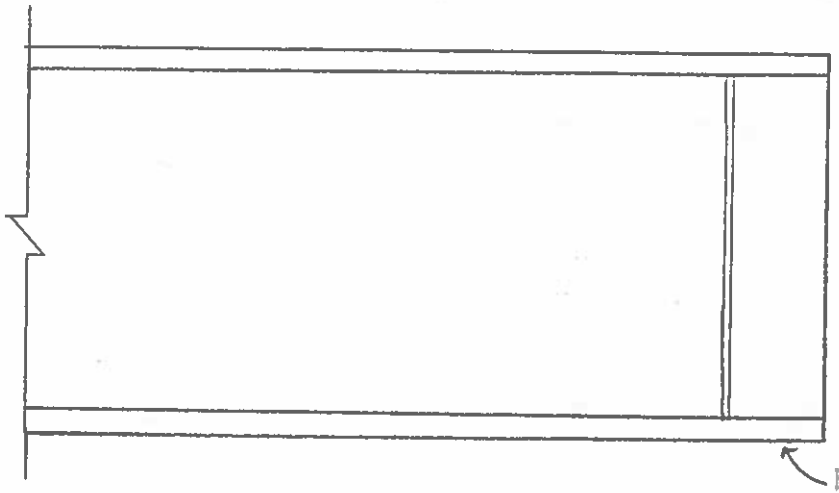

BEARING EXHIBITS ABRASION RUST & MOVEMENT UNDER LIVE LOAD
100

SPAN D, BEAM 7
WEST ELEV. AT P3

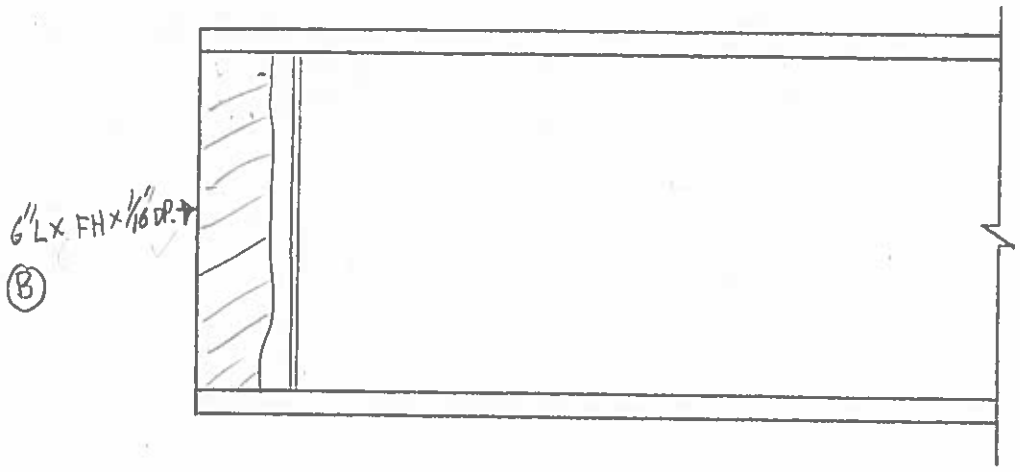

SPAN D, BEAM 7
EAST ELEV. AT P3

REVISION	DATE	CREW	COMPANY	REVISION	DATE	CREW	COMPANY
1				3			
2				4			

Dewberry

59 Elm Street, Suite 101
New Haven, CT 06510

FIELD NOTES

JOB NO.

BRIDGE NO: 03014 A

DATE: 7/1/2014

SHEET OF

CREW: RFP, PHH

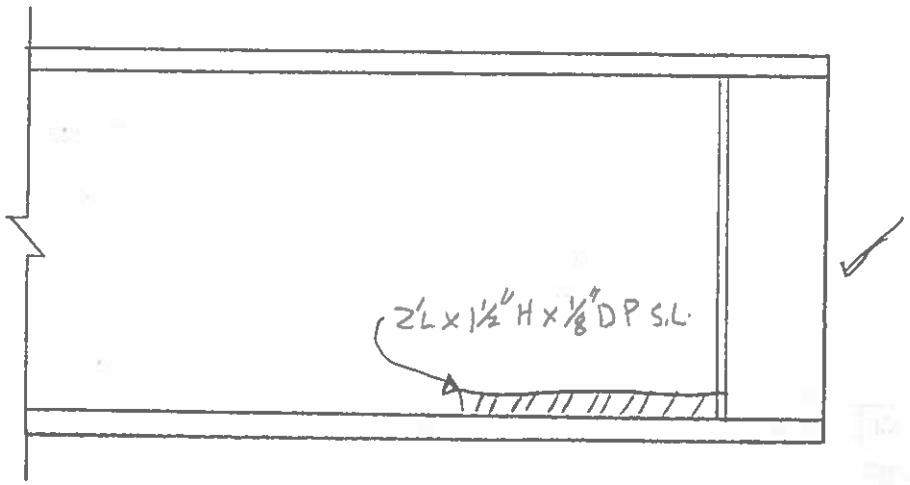

SPAN D, BEAM 8
WEST ELEV. AT P3

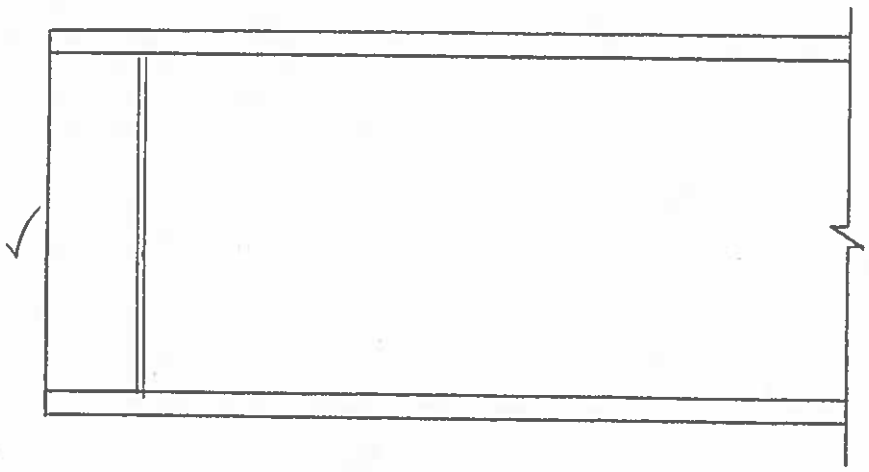

SPAN D, BEAM 8
EAST ELEV. AT P3

REVISION	DATE	CREW	COMPANY	REVISION	DATE	CREW	COMPANY
1				3			
2				4			

Dewberry

59 Elm Street, Suite 101
New Haven, CT 06510

FIELD NOTES

JOB NO.

BRIDGE NO: 03014 A

DATE: 7/1/2014

SHEET OF

CREW: RFP, PHH

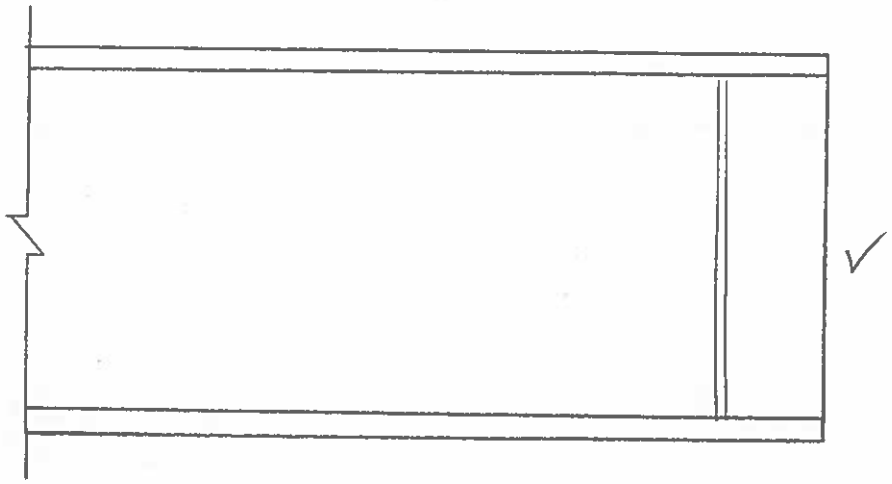

SPAN D, BEAM 9
WEST ELEV. AT P3

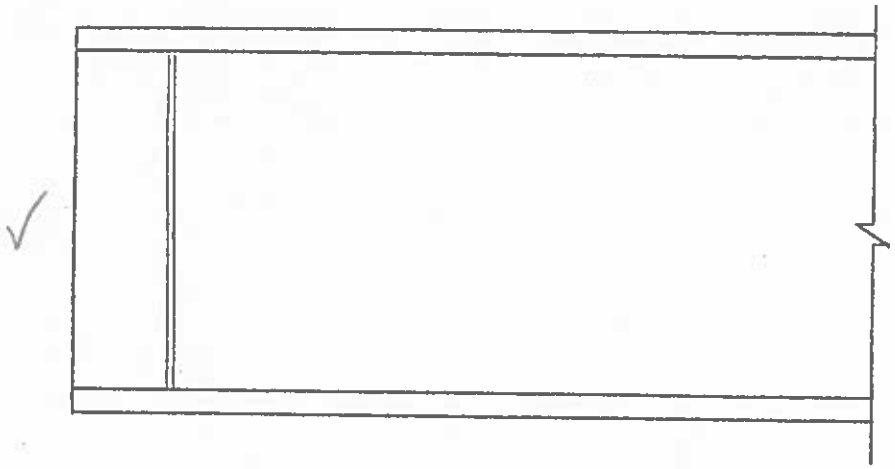

SPAN D, BEAM 9
EAST ELEV. AT P3

REVISION	DATE	CREW	COMPANY	REVISION	DATE	CREW	COMPANY
1				3			
2				4			

Dewberry
59 Elm Street, Suite 101
New Haven, CT 06510

FIELD NOTES

JOB NO.

BRIDGE NO: 03014 A

DATE: 7/1/2014

SHEET OF

CREW: RFP, PHH

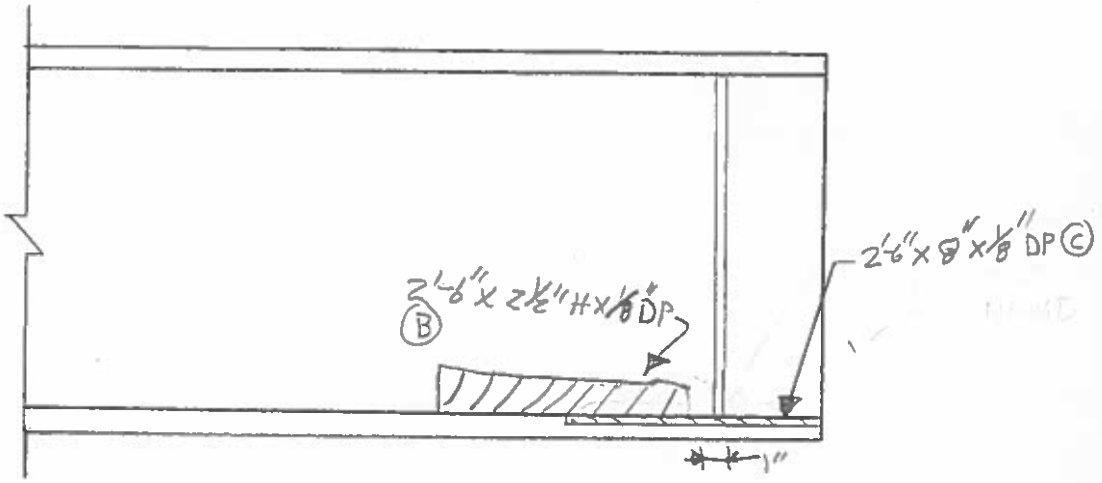

SPAN D, BEAM 10
WEST ELEV. AT P3

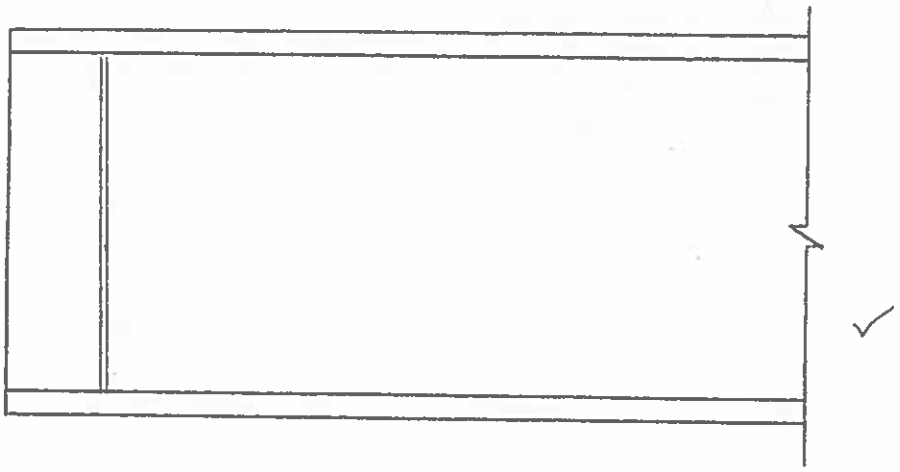

SPAN D, BEAM 10
EAST ELEV. AT P3

REVISION	DATE	CREW	COMPANY	REVISION	DATE	CREW	COMPANY
1				3			
2				4			

Dewberry	FIELD NOTES	JOB NO.	BRIDGE NO: 03014 A
59 Elm Street, Suite 101 New Haven, CT 06510		DATE: 7/11/2014	SHEET OF
		CREW: RFP, PHH	

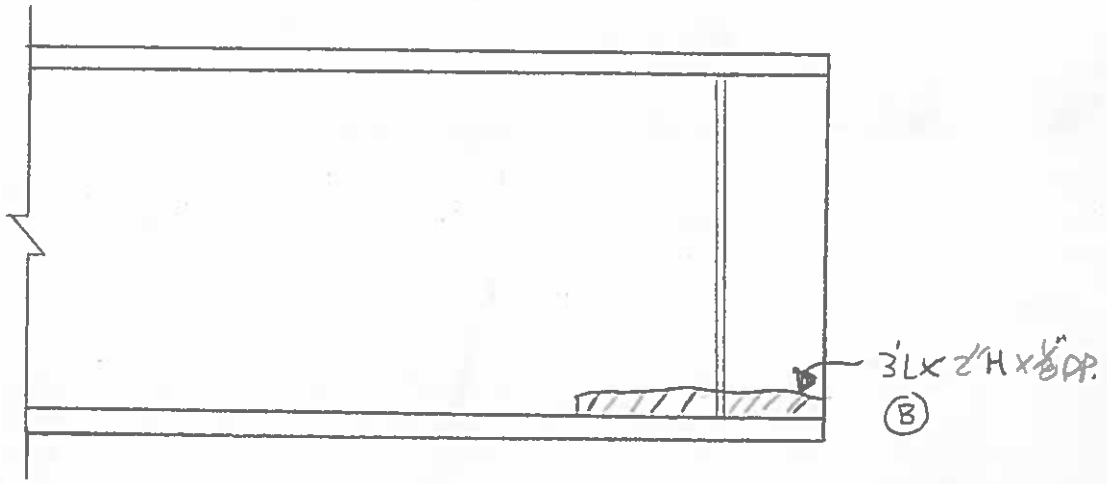

SPAN D, BEAM 11
WEST ELEV. AT P3

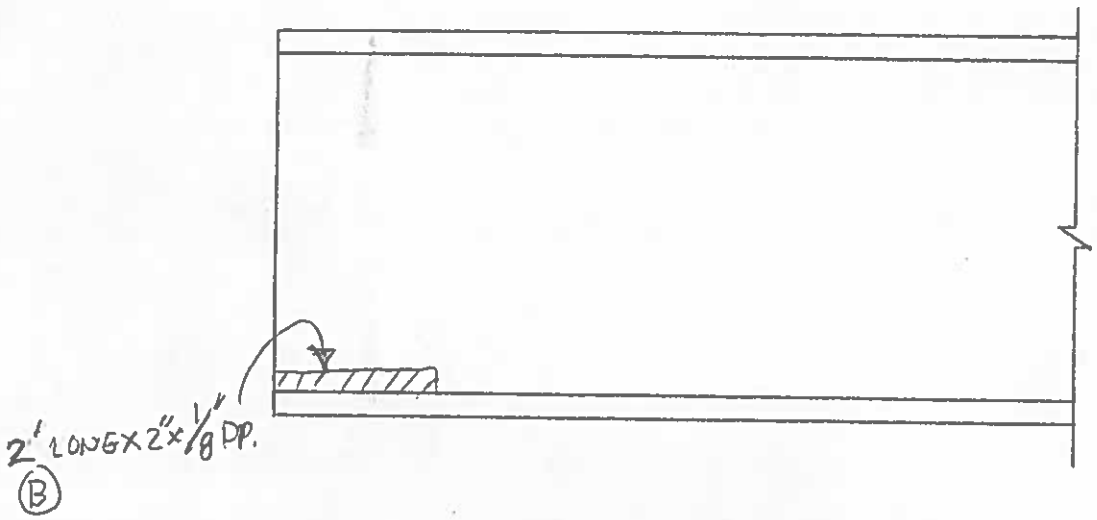

SPAN D, BEAM 11
EAST ELEV. AT P3

REVISION	DATE	CREW	COMPANY	REVISION	DATE	CREW	COMPANY
1				3			
2				4			

Dewberry
59 Elm Street, Suite 101
New Haven, CT 06510

FIELD NOTES	JOB NO.	BRIDGE NO: 03014 A
	DATE: 7/8/2014	SHEET OF
	CREW: RFP, PHH	

- WEB BOWED EAST 1/8" FH

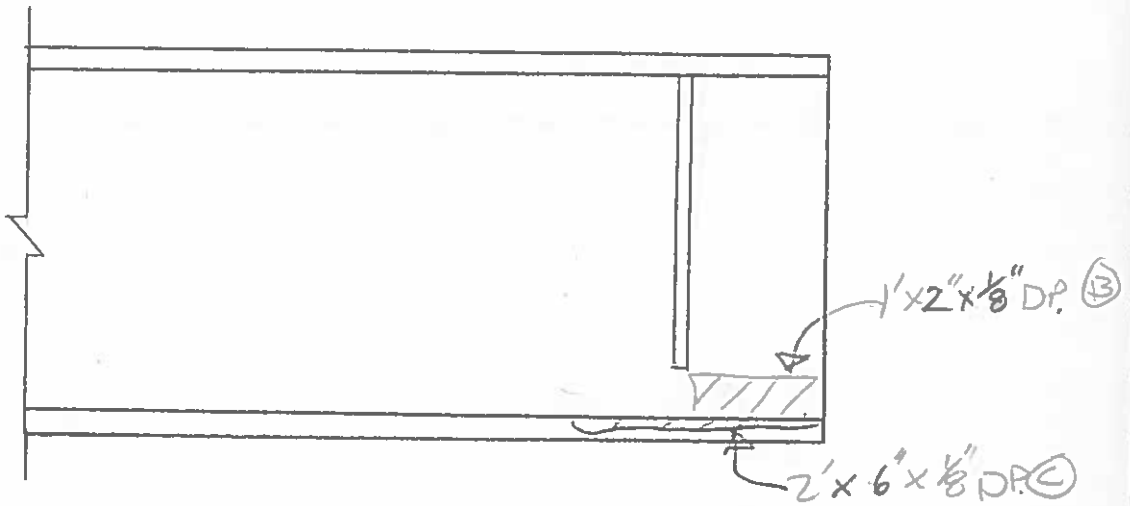

SPAN D, BEAM 1
EAST ELEV. AT P4

- NO SECTION LOSS

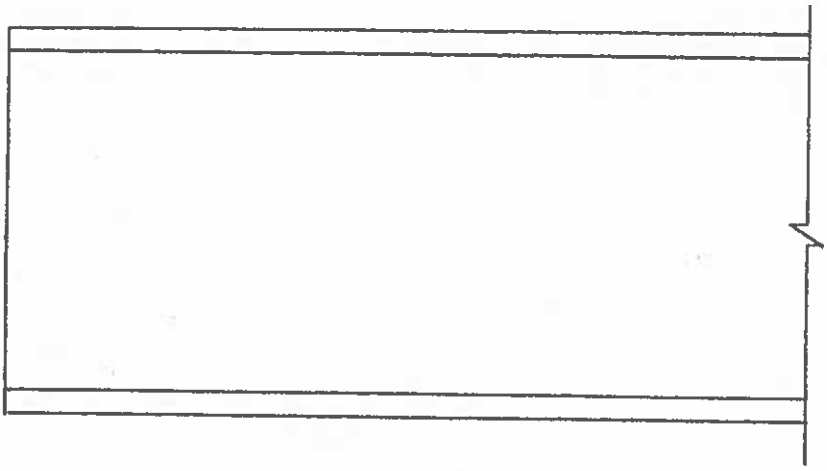

SPAN D, BEAM 1
WEST ELEV. AT P4

REVISION 1	DATE	CREW	COMPANY	REVISION 3	DATE	CREW	COMPANY
REVISION 2	DATE	CREW	COMPANY	REVISION 4	DATE	CREW	COMPANY

Dewberry	FIELD NOTES	JOB NO.	BRIDGE NO: 03014A
59 Elm Street, Suite 101 New Haven, CT 06510		DATE: 7/8/2014	SHEET OF
		CREW: RFP, PHH	

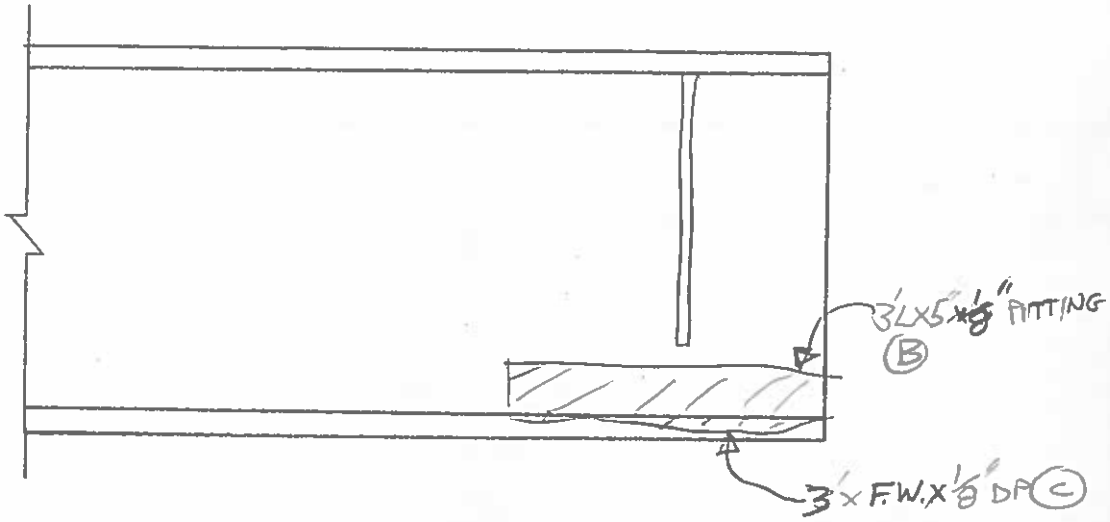

SPAN D, BEAM 2
EAST ELEV. AT P4

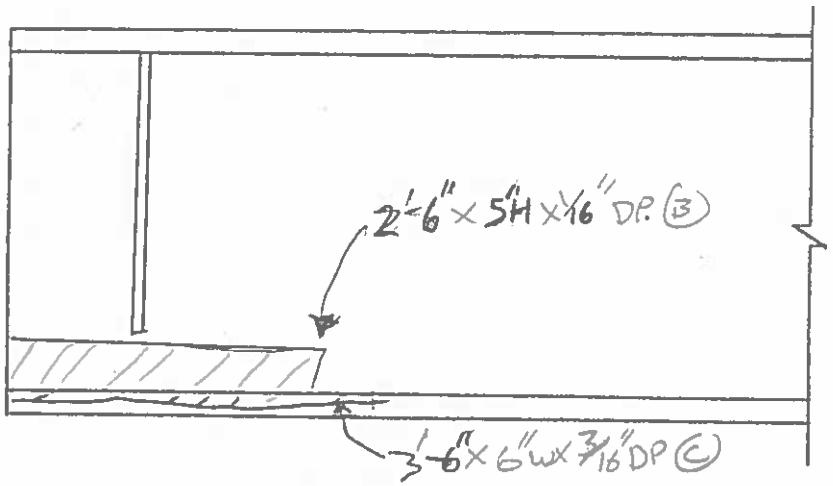

SPAN D, BEAM 2
WEST ELEV. AT P4

REVISION 1	DATE	CREW	COMPANY	REVISION 3	DATE	CREW	COMPANY
REVISION 2	DATE	CREW	COMPANY	REVISION 4	DATE	CREW	COMPANY

Dewberry
59 Elm Street, Suite 101
New Haven, CT 06510

FIELD NOTES

JOB NO.

BRIDGE NO: 03014A

DATE: 7/8/2014

SHEET OF

CREW: RFP, PHH

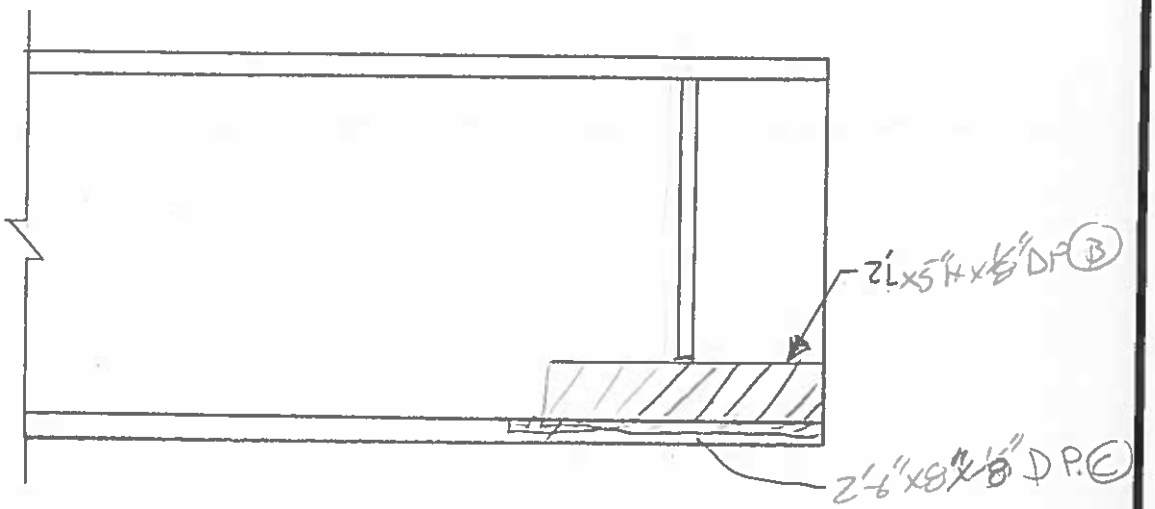

SPAN D, BEAM 3
EAST ELEV. AT P4

- WEB BOWED EAST 1/8" OVER FH

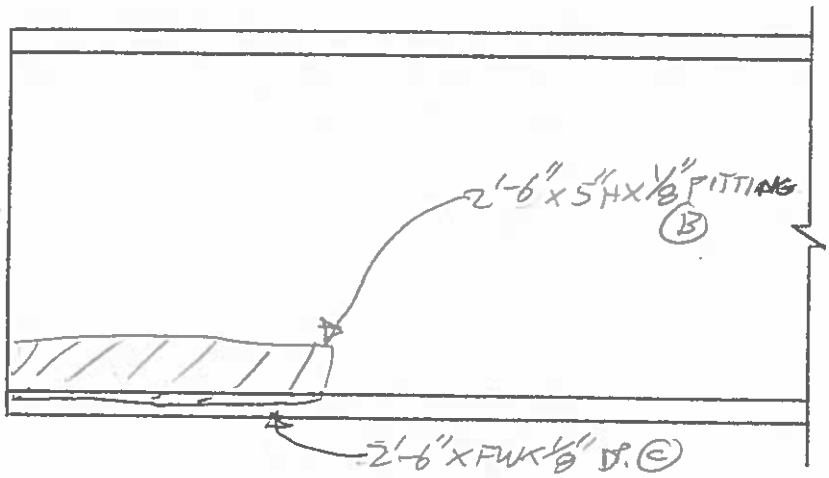

SPAN D, BEAM 3
WEST ELEV. AT P4

REVISION	DATE	CREW	COMPANY	REVISION	DATE	CREW	COMPANY
1				3			
2				4			

Dewberry
59 Elm Street, Suite 101
New Haven, CT 06510

FIELD NOTES

JOB NO.

BRIDGE NO: 03014 A

DATE: 7/8/2014

SHEET OF

CREW: RFP, PHH

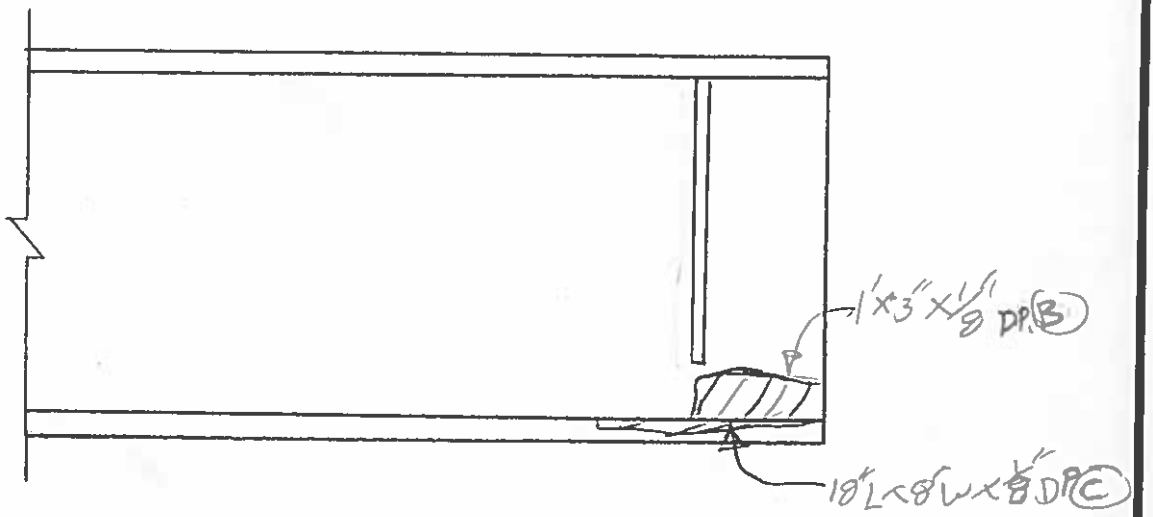

SPAN D, BEAM 4
EAST ELEV. AT P4

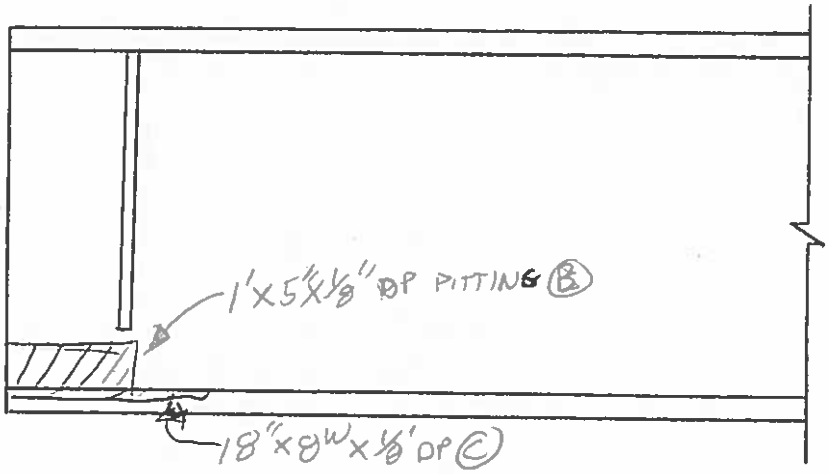

SPAN D, BEAM 4
WEST ELEV. AT P4

REVISION	DATE	CREW	COMPANY	REVISION	DATE	CREW	COMPANY
1				3			
2				4			

Dewberry
59 Elm Street, Suite 101
New Haven, CT 06510

FIELD NOTES

JOB NO.

BRIDGE NO: 03014 A

DATE: 7/1/2014

SHEET OF

CREW: RFP, PHH

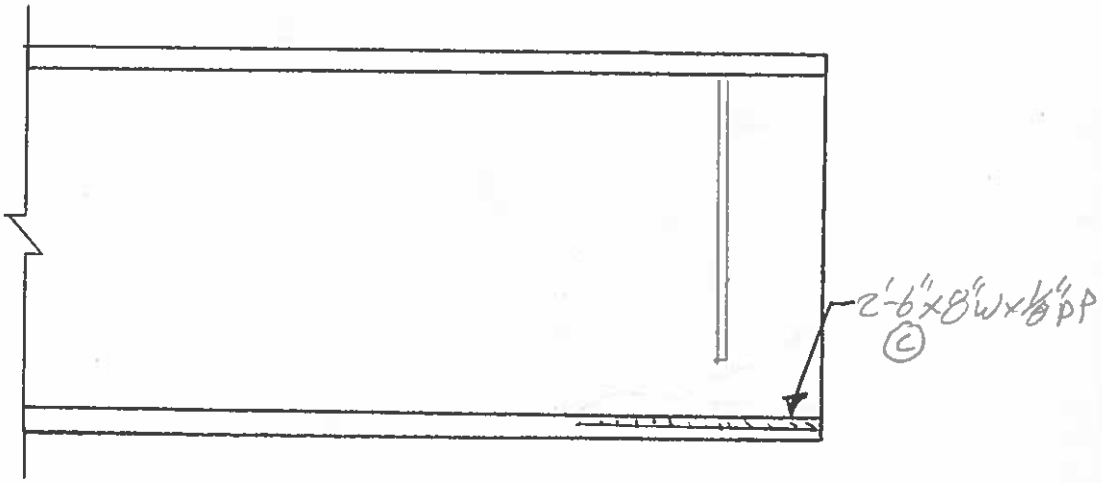

SPAN D, BEAM 5
EAST ELEV. AT P4

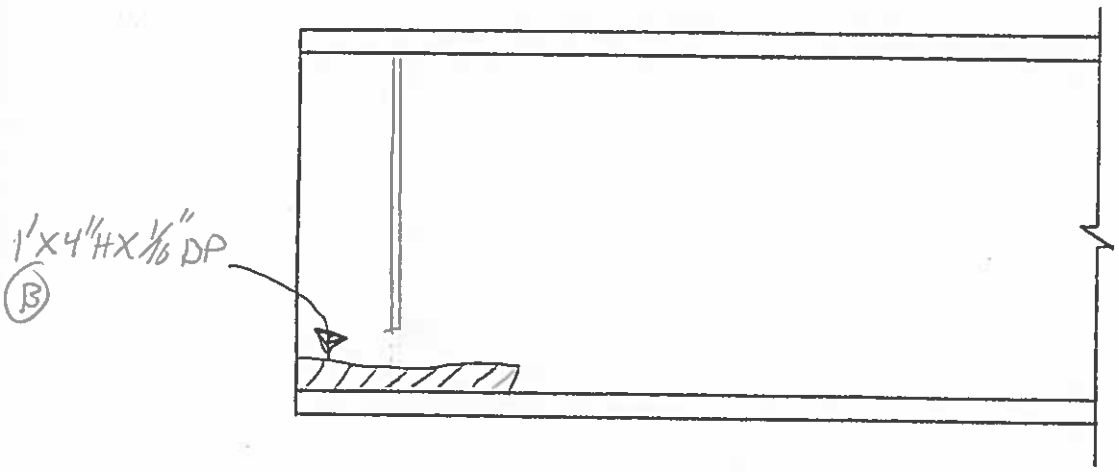

SPAN D, BEAM 5
WEST ELEV. AT P4

REVISION	DATE	CREW	COMPANY	REVISION	DATE	CREW	COMPANY
1				3			
2				4			

Dewberry
59 Elm Street, Suite 101
New Haven, CT 06510

FIELD NOTES	JOB NO.	BRIDGE NO: 03014 A
	DATE: 7/1/2014	SHEET OF
	CREW: RFP, PHH	

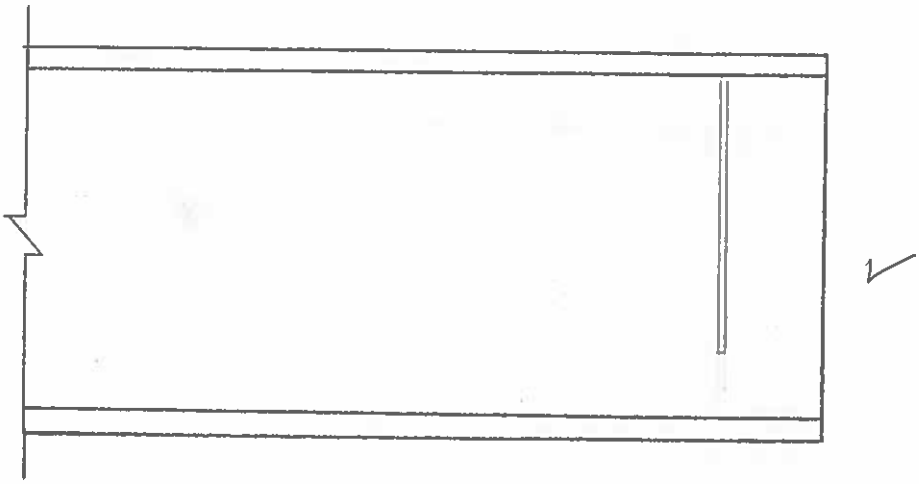

SPAN D, BEAM 6
EAST ELEV. AT P4

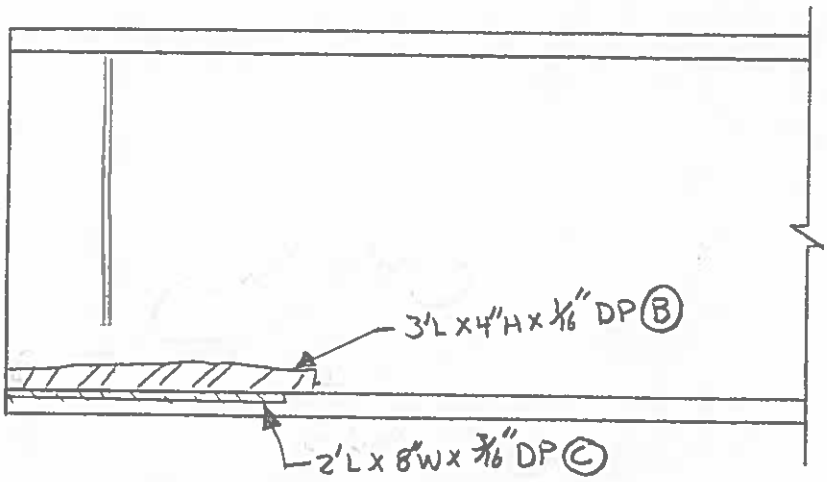

SPAN D, BEAM 6
WEST ELEV. AT P4

REVISION	DATE	CREW	COMPANY	REVISION	DATE	CREW	COMPANY
1				3			
2				4			

Dewberry
59 Elm Street, Suite 101
New Haven, CT 06510

FIELD NOTES

JOB NO.

BRIDGE NO: 03014 A

DATE: 7/1/2014

SHEET OF

CREW: RFP, PHH

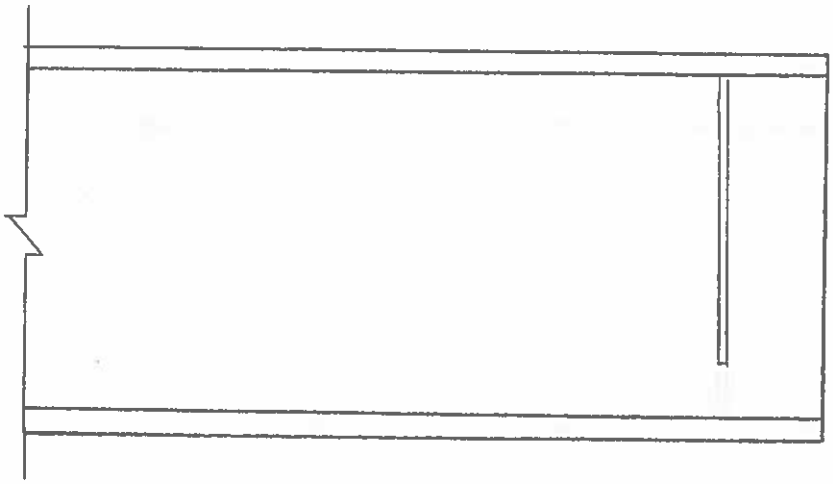

SPAN D, BEAM 7
FAST ELEV. AT P4

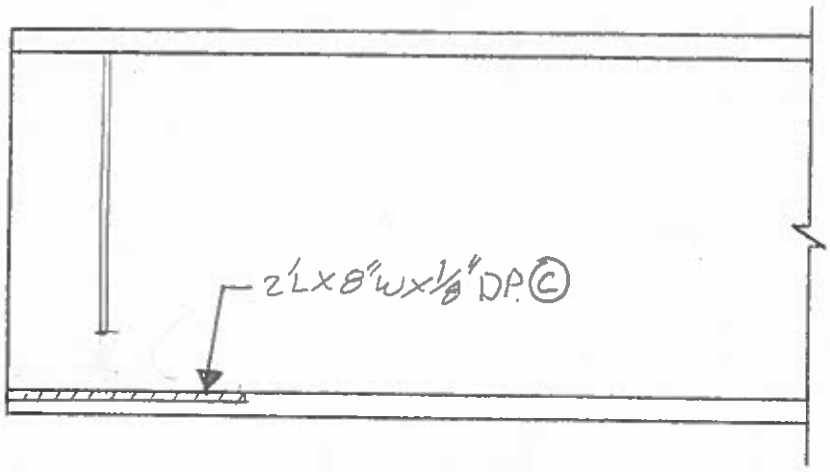

SPAN D, BEAM 7
WEST ELEV. AT P4

REVISION	DATE	CREW	COMPANY	REVISION	DATE	CREW	COMPANY
1				3			
2				4			

Dewberry
59 Elm Street, Suite 101
New Haven, CT 06510

FIELD NOTES

JOB NO.

BRIDGE NO: 03014 A

DATE: 7/1/2014

SHEET OF

CREW: RFP, PHH

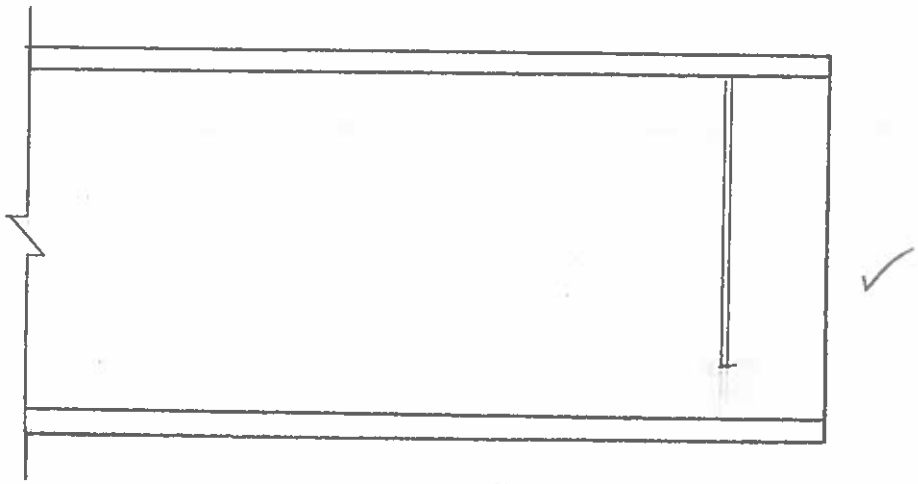

SPAN D, BEAM B
EAST ELEV. AT P4

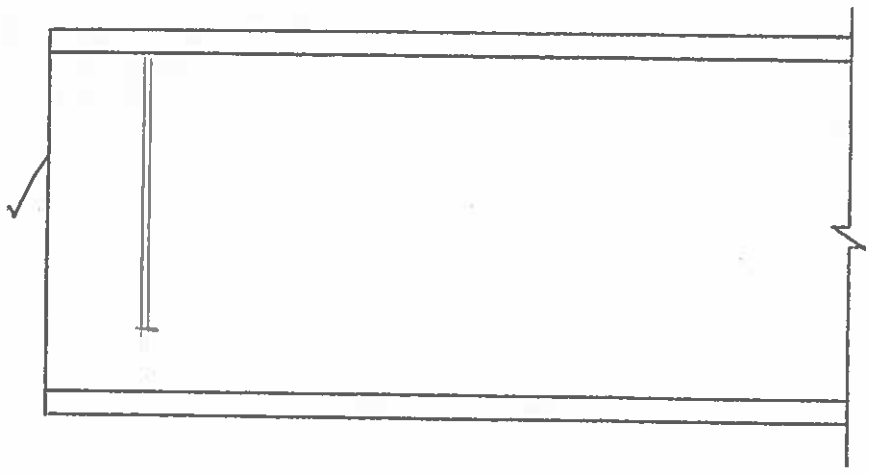

SPAN D, BEAM B
WEST ELEV. AT P4

REVISION	DATE	CREW	COMPANY	REVISION	DATE	CREW	COMPANY
1				3			
2				4			

Dewberry
59 Elm Street, Suite 101
New Haven, CT 06510

FIELD NOTES

JOB NO.

BRIDGE NO: 03014 A

DATE: 7/11/2014

SHEET OF

CREW: RFP, PHH

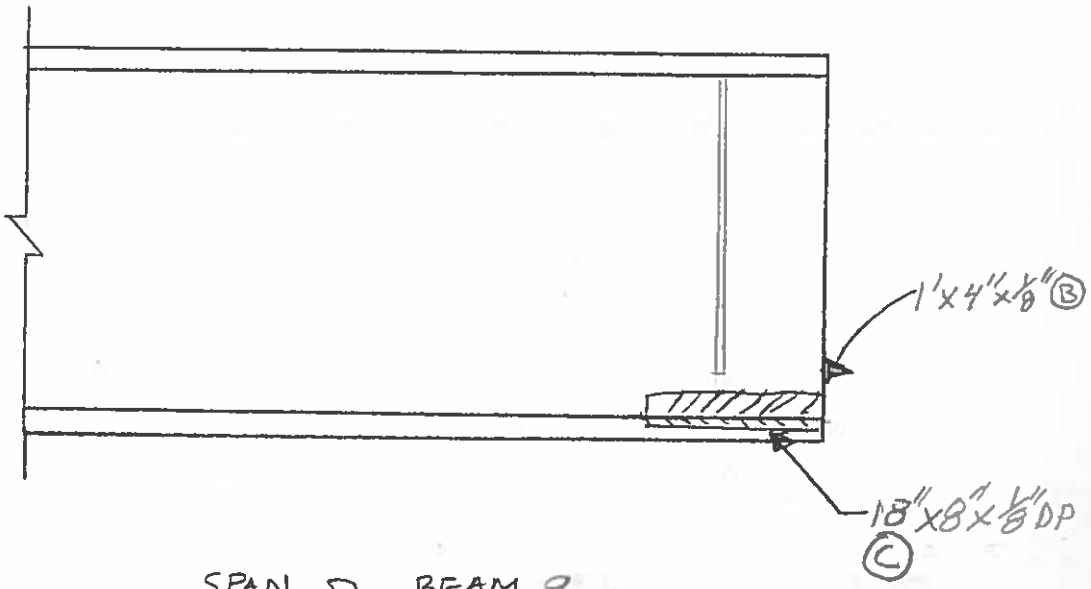

SPAN D, BEAM 9
EAST ELEV. AT P4

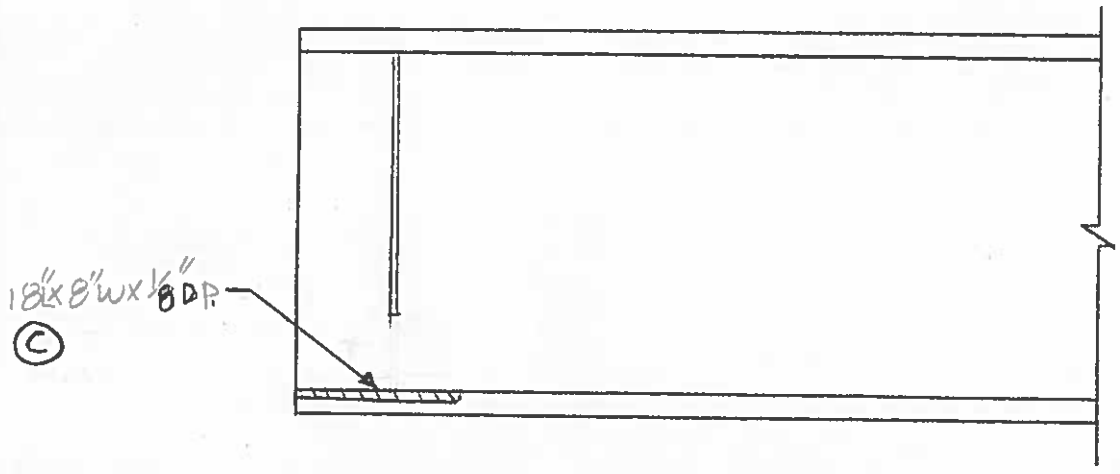

SPAN D, BEAM 9
WEST ELEV. AT P4

REVISION	DATE	CREW	COMPANY	REVISION	DATE	CREW	COMPANY
1				3			
2				4			

Dewberry
59 Elm Street, Suite 101
New Haven, CT 06510

FIELD NOTES	JOB NO.	BRIDGE NO: 03014 A
	DATE: 7/1/2014	SHEET OF
	CREW: RFP, PHH	

• TOP OF WEB IS TIPPED 1/4" EAST OVER 2'

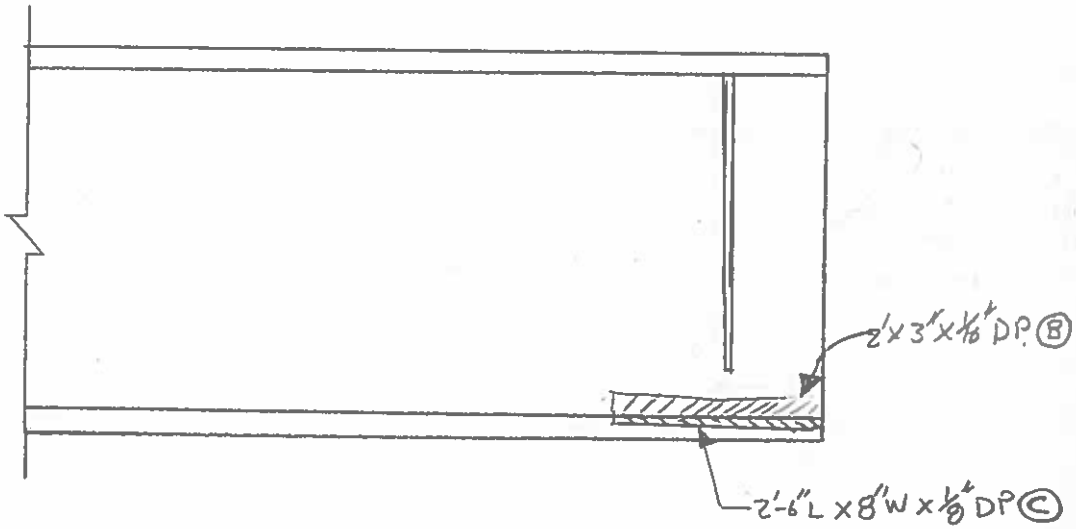

SPAN D, BEAM 10
EAST ELEV. AT P4

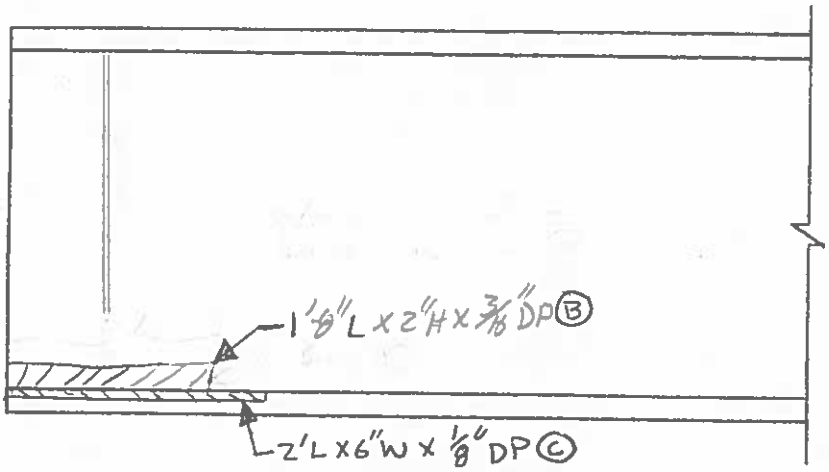

SPAN D, BEAM 10
WEST ELEV. AT P4

REVISION	DATE	CREW	COMPANY	REVISION	DATE	CREW	COMPANY
1				3			
2				4			

Dewberry	FIELD NOTES	JOB NO.	BRIDGE NO: 03014 A
59 Elm Street, Suite 101 New Haven, CT 06510		DATE: 7/1/2014	SHEET OF
		CREW: RFP, PHH	

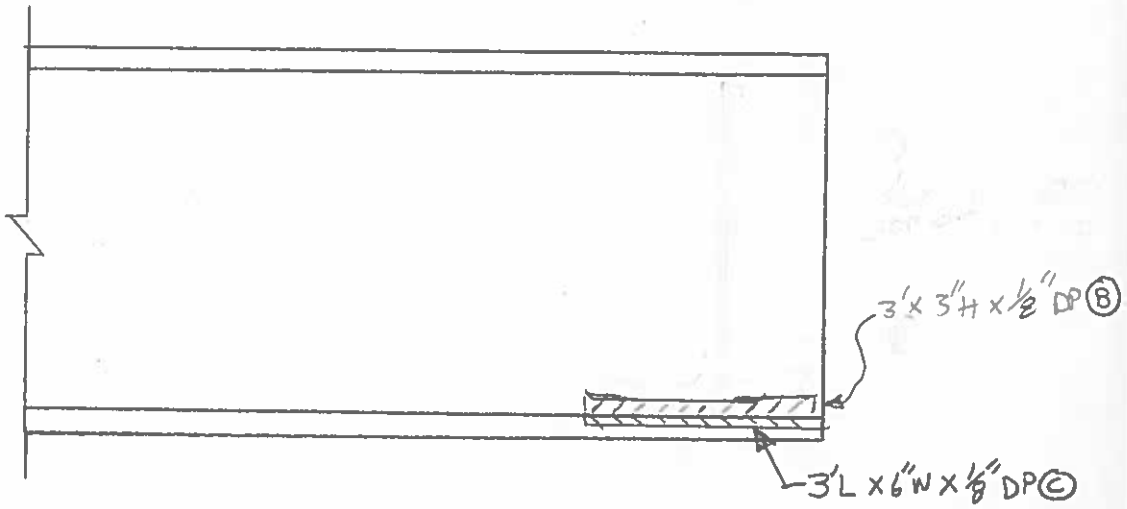

SPAN D, BEAM 11
EAST ELEV. AT P4

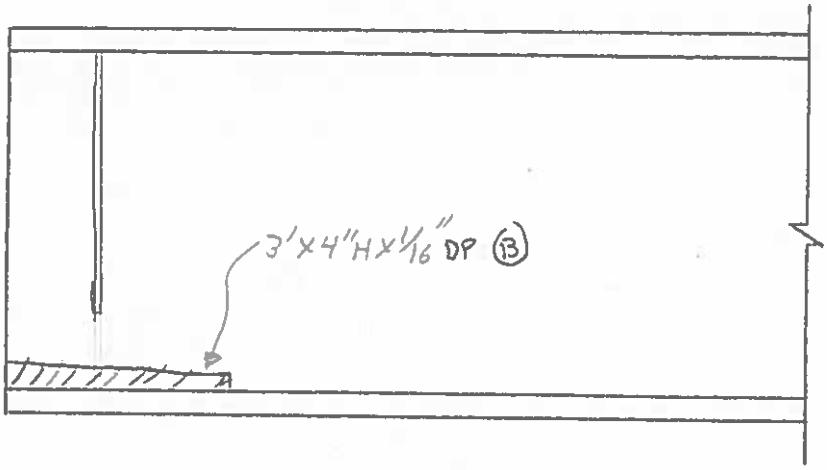

SPAN D, BEAM 11
WEST ELEV. AT P4

REVISION 1	DATE	CREW	COMPANY	REVISION 3	DATE	CREW	COMPANY
REVISION 2	DATE	CREW	COMPANY	REVISION 4	DATE	CREW	COMPANY

SPAN E

FIELD NOTES

PREPARED BY: Gary Consulting Services, Inc. ENGINEERS • CONSULTANTS • CONSTRUCTION MANAGERS

PROJ. NO. 170-3013

BRIDGE NO. 3014A

DATE: 11/05/2010

SHEET 58 of 48

CREW: PD6, MD, SN, GF

Revision	Date	Crew	Company
2	7/11/14 & 7/18/14	RFD, PHH	DEW
1	9/10/12	PKG, AKC	GM2

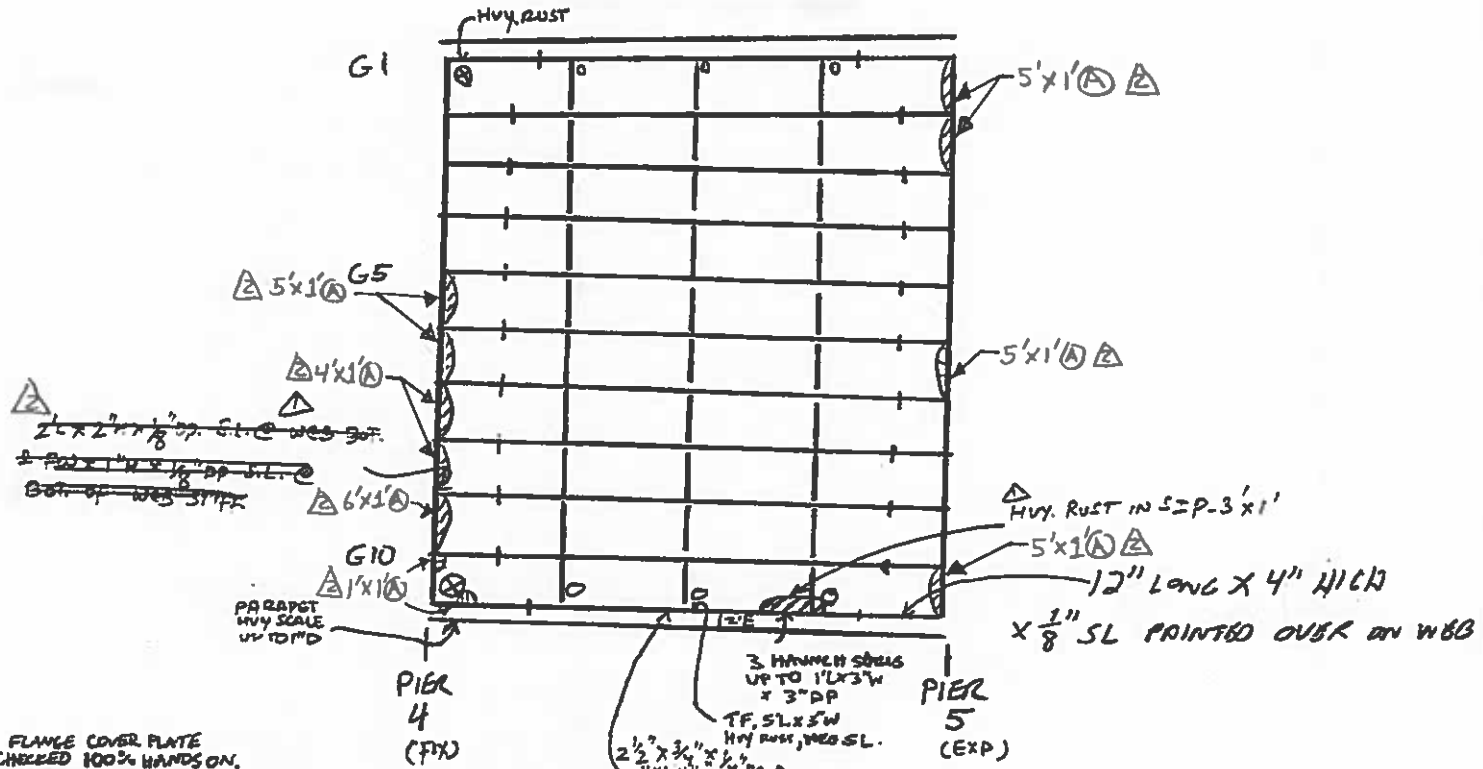

— BOTTOM FLANGE COVER PLATE ENDS CHECKED 100% HANDS ON.

⊠ SLIPPER FREE FALL

○ PVC WEEP PIPE

LEGEND

- HOLLOW AREA
- SHALLOW REBAR
- SPALL AREA
- SPALL AREA WITH EXPOSED REBAR
- MAP CRACKS OR HAIRLINE MAP CRACKS
- HAIRLINE CRACKS (HLC) OR CRACKS (CR)
- HONEY COMB AREA
- SCALE AREA (HVY, MED, OR LT)

FRAMING PLAN SPAN E

Δ2 SEE DETAIL SHEETS FOR MORE INFORMATION

GENERAL NOTES

- SEE SPAN A & C GENERAL NOTES.
- FASCIA GIRDERS HAVE ZERO CAMBER

Dewberry	FIELD NOTES	JOB NO.	BRIDGE NO: 03014 A
59 Elm Street, Suite 101 New Haven, CT 06510		DATE: 7/8/2014	SHEET OF
		CREW: RFP, PHH	

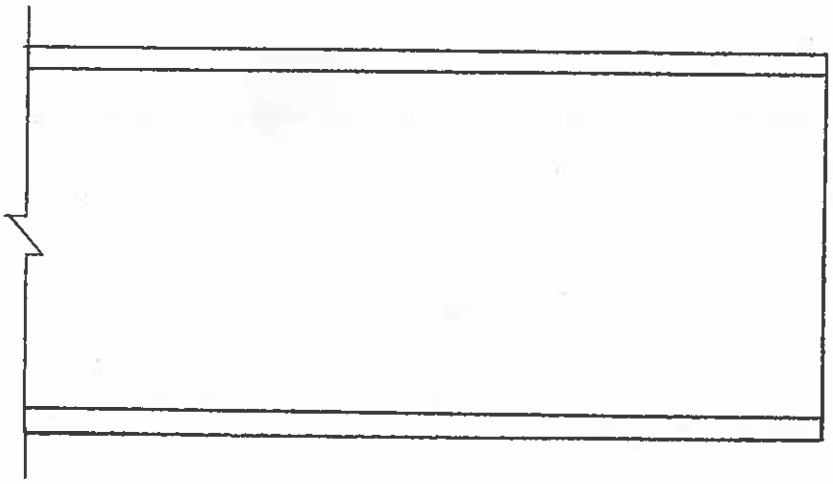

SPAN E, BEAM 1
WEST ELEV. AT P4

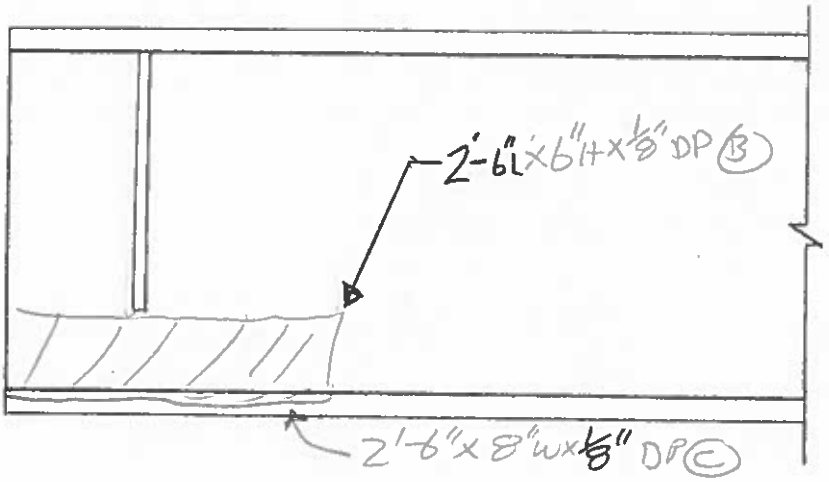

SPAN E, BEAM 1
EAST ELEV. AT P4

REVISION 1	DATE	CREW	COMPANY	REVISION 3	DATE	CREW	COMPANY
REVISION 2	DATE	CREW	COMPANY	REVISION 4	DATE	CREW	COMPANY

Dewberry
59 Elm Street, Suite 101
New Haven, CT 06510

FIELD NOTES	JOB NO.	BRIDGE NO: 03014 A
	DATE: 7/8/2014	SHEET OF
	CREW: RFP, PHH	

• TOP OF WEB TIPPED 3/16" WEST OVER 2'

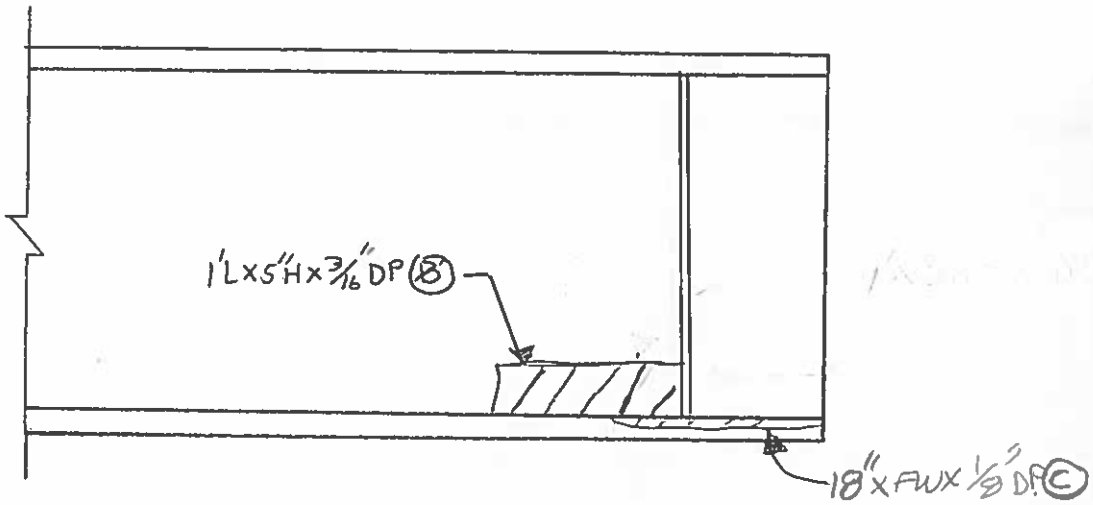

SPAN E, BEAM 2
WEST ELEV. AT P4

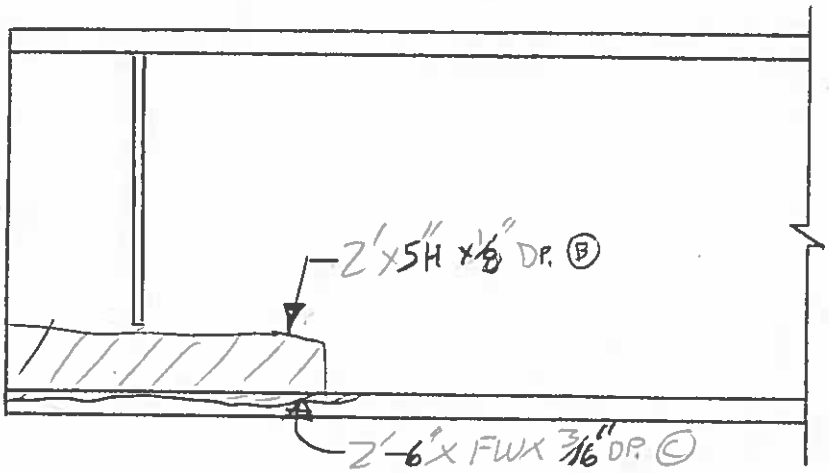

SPAN E, BEAM 2
EAST ELEV. AT P4

REVISION 1	DATE	CREW	COMPANY	REVISION 3	DATE	CREW	COMPANY
REVISION 2	DATE	CREW	COMPANY	REVISION 4	DATE	CREW	COMPANY

Dewberry
59 Elm Street, Suite 101
New Haven, CT 06510

FIELD NOTES

JOB NO.

BRIDGE NO: 03014 A

DATE: 7/8/2014

SHEET OF

CREW: RFP, PHH

* TOP OF WEB TIPPED 1/8" EAST OVER 2'

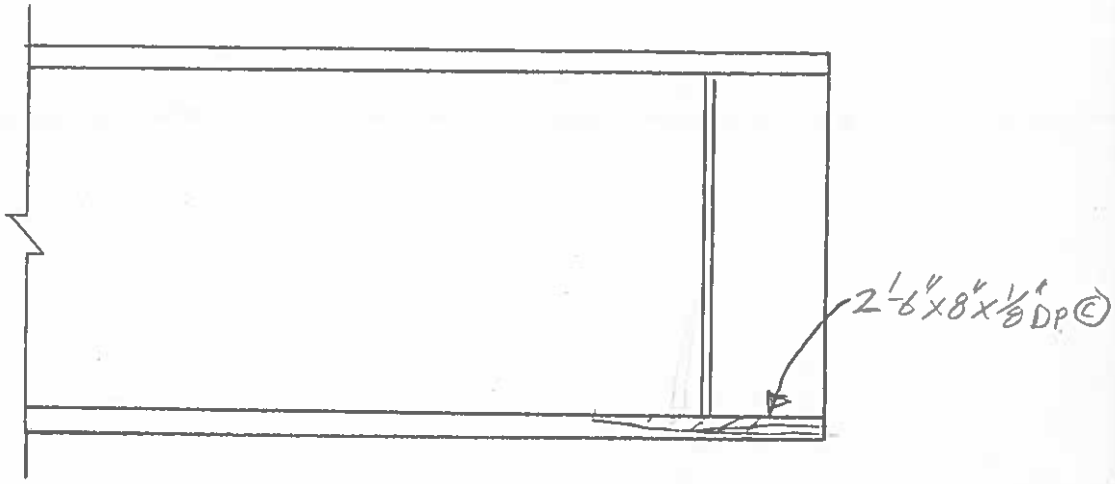

SPAN E, BEAM 3
WEST ELEV. AT P4

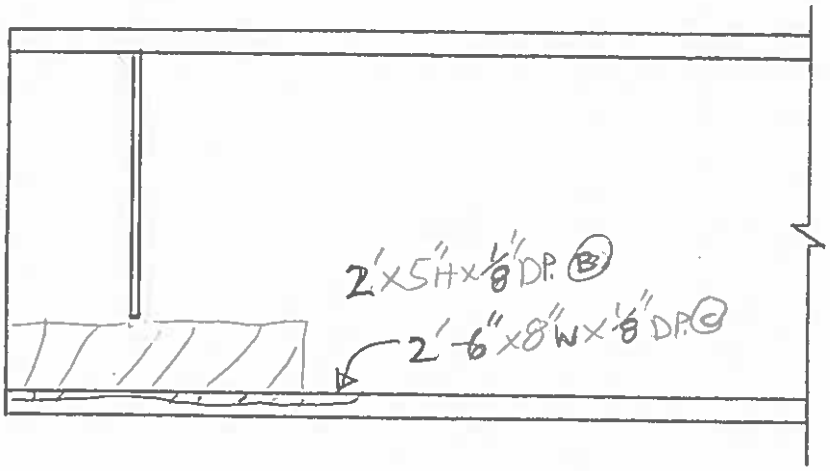

SPAN E, BEAM 3
EAST ELEV. AT P4

REVISION	DATE	CREW	COMPANY	REVISION	DATE	CREW	COMPANY
1				3			
2				4			

Dewberry
59 Elm Street, Suite 101
New Haven, CT 06510

FIELD NOTES

JOB NO.

BRIDGE NO: 03014 A

DATE: 7/8/2014

SHEET OF

CREW: RFP, PHH

- TOP OF WEB TIPPED EAST 1/4" OVER 2'

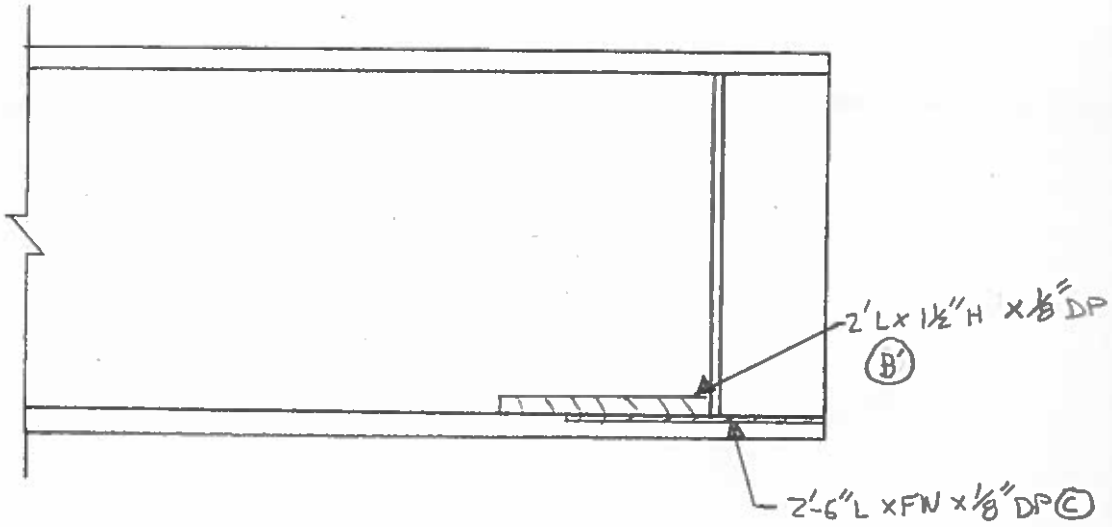

SPAN E, BEAM 4
WEST ELEV. AT P4

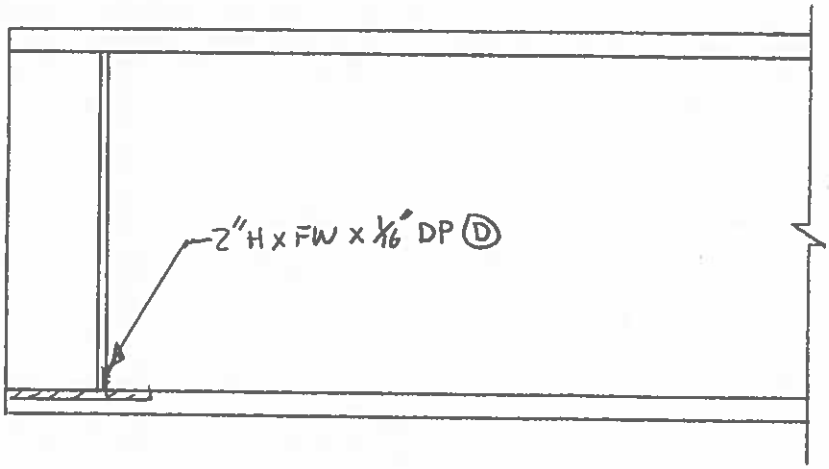

SPAN E, BEAM 4
EAST ELEV. AT P4

REVISION	DATE	CREW	COMPANY	REVISION	DATE	CREW	COMPANY
1				3			
2				4			

Dewberry
59 Elm Street, Suite 101
New Haven, CT 06510

FIELD NOTES	JOB NO.	BRIDGE NO: 03014 A
	DATE: 7/8/2014	SHEET OF
	CREW: RFP, PHH	

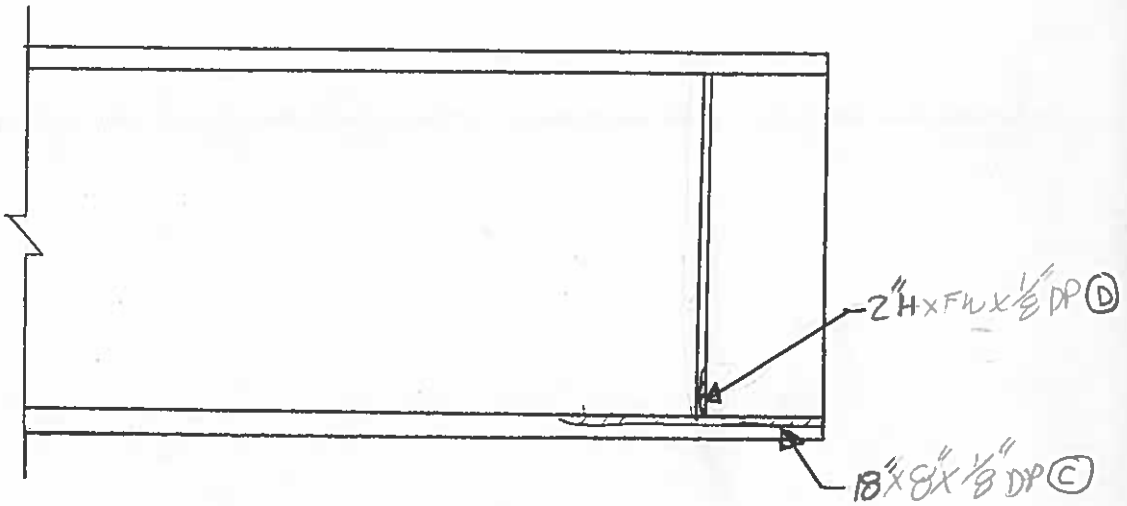

SPAN E, BEAM 5
WEST ELEV. AT P4

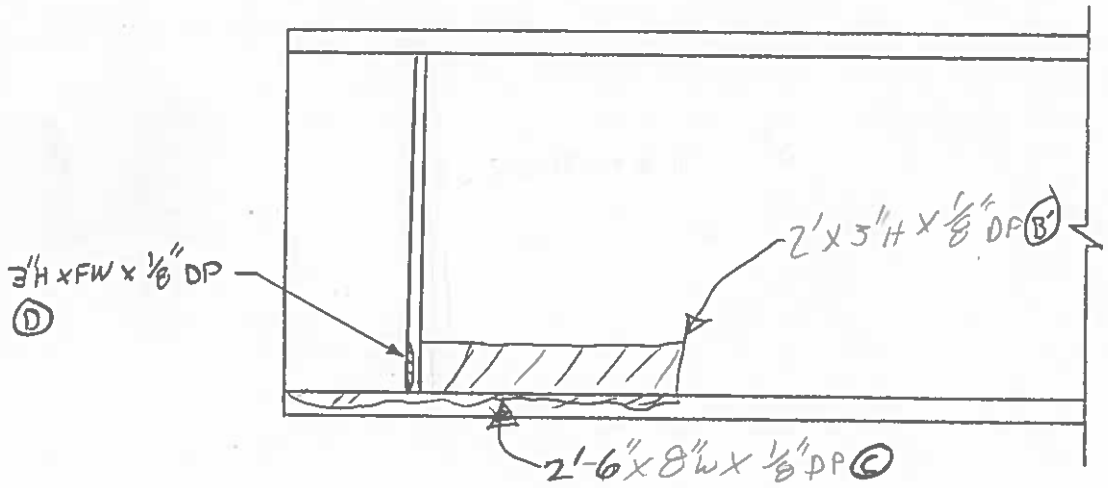

SPAN E, BEAM 5
EAST ELEV. AT P4

REVISION 1	DATE	CREW	COMPANY	REVISION 3	DATE	CREW	COMPANY
REVISION 2	DATE	CREW	COMPANY	REVISION 4	DATE	CREW	COMPANY

Dewberry	FIELD NOTES	JOB NO.	BRIDGE NO: 03014 A
59 Elm Street, Suite 101 New Haven, CT 06510		DATE: 7/1/2014	SHEET OF
		CREW: RFP, PH H	

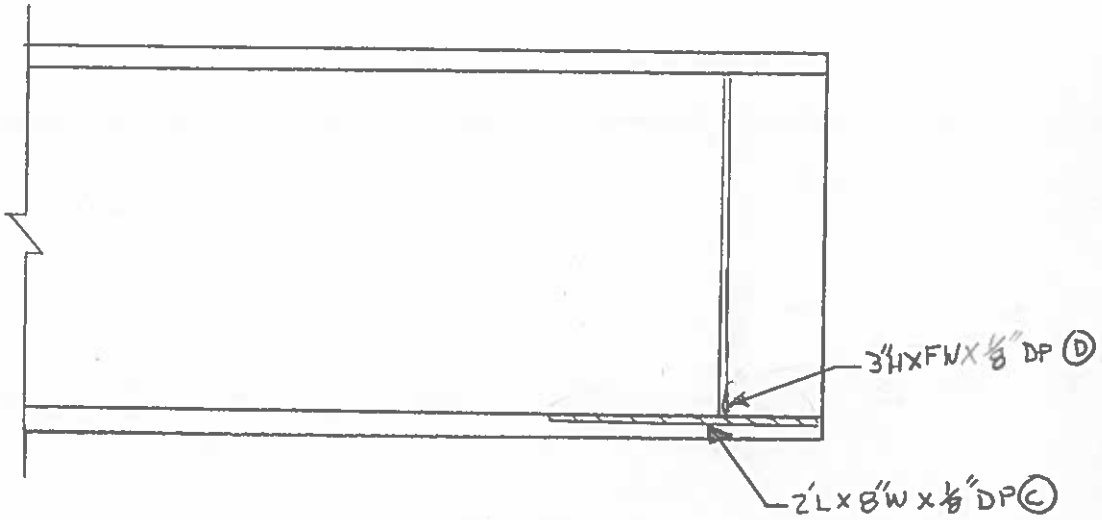

SPAN E, BEAM 6
WEST ELEV. AT P4

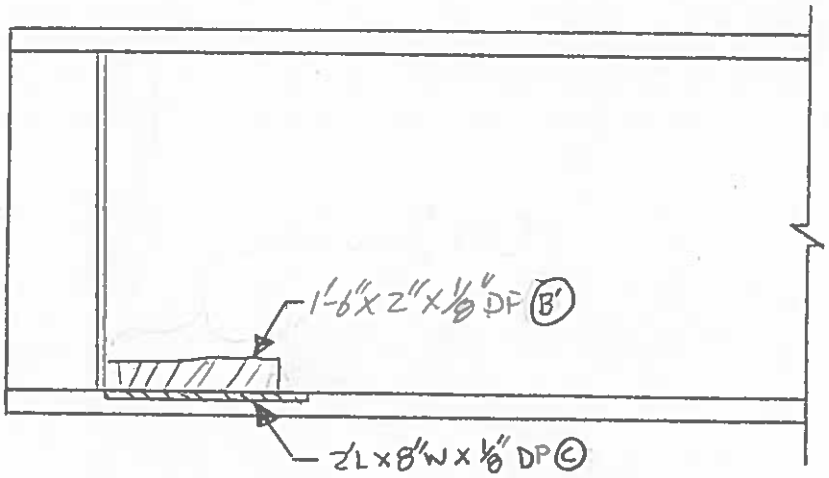

SPAN E, BEAM 6
EAST ELEV. AT P4

REVISION 1	DATE	CREW	COMPANY	REVISION 3	DATE	CREW	COMPANY
REVISION 2	DATE	CREW	COMPANY	REVISION 4	DATE	CREW	COMPANY

Dewberry®	FIELD NOTES	JOB NO.	BRIDGE NO: 03014 A
59 Elm Street, Suite 101 New Haven, CT 06510		DATE: 7/1/2014	SHEET OF
		CREW: RFP, PHH	

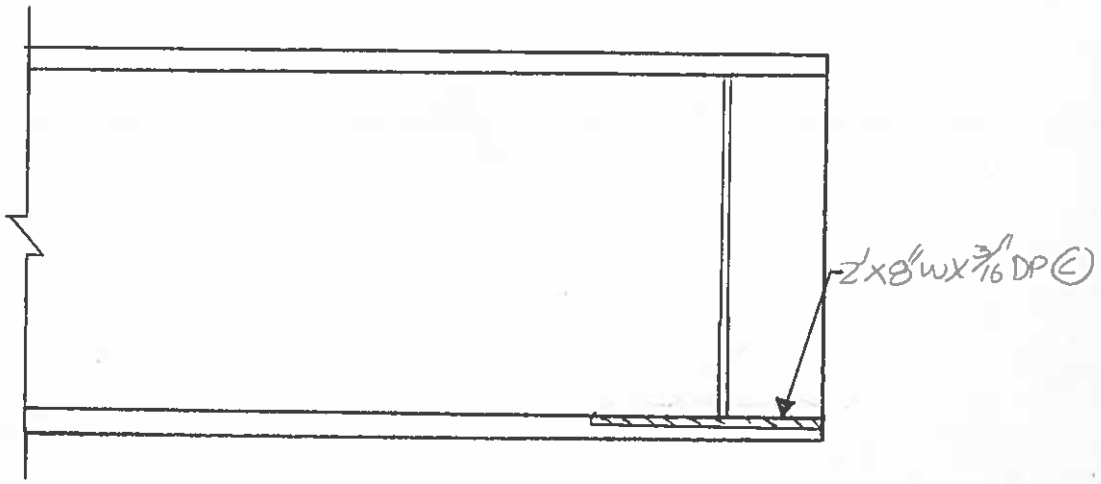

SPAN E, BEAM 7
WEST ELEV. AT P4

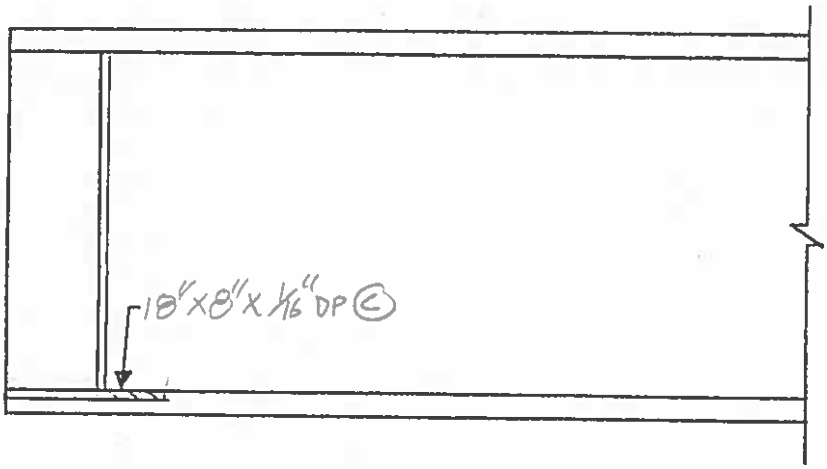

SPAN E, BEAM 7
EAST ELEV. AT P4

REVISION	DATE	CREW	COMPANY	REVISION	DATE	CREW	COMPANY
1				3			
2				4			

Dewberry
59 Elm Street, Suite 101
New Haven, CT 06510

FIELD NOTES

JOB NO.

BRIDGE NO: 03014 A

DATE: 7/1/2014

SHEET OF

CREW: RFP, PHH

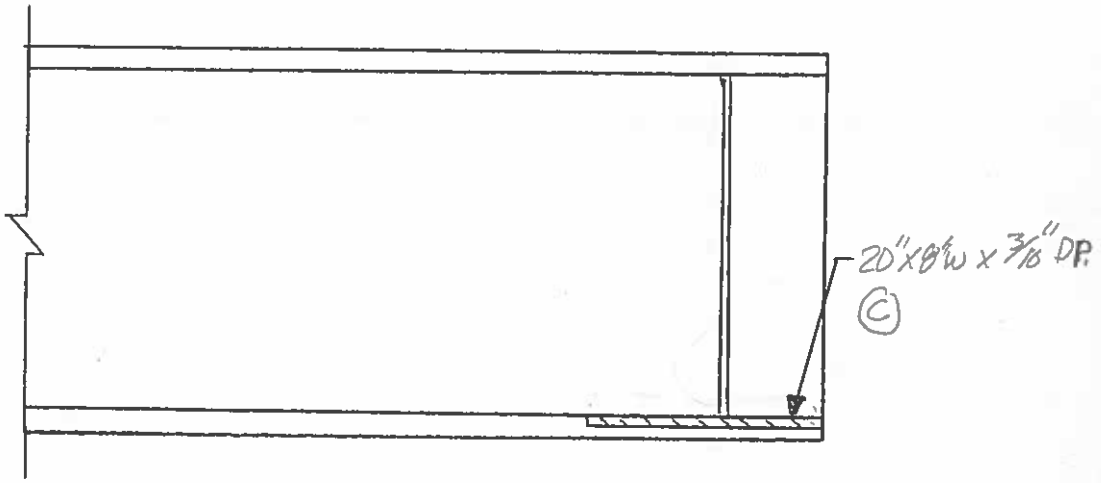

SPAN E, BEAM 8
WEST ELEV. AT P4

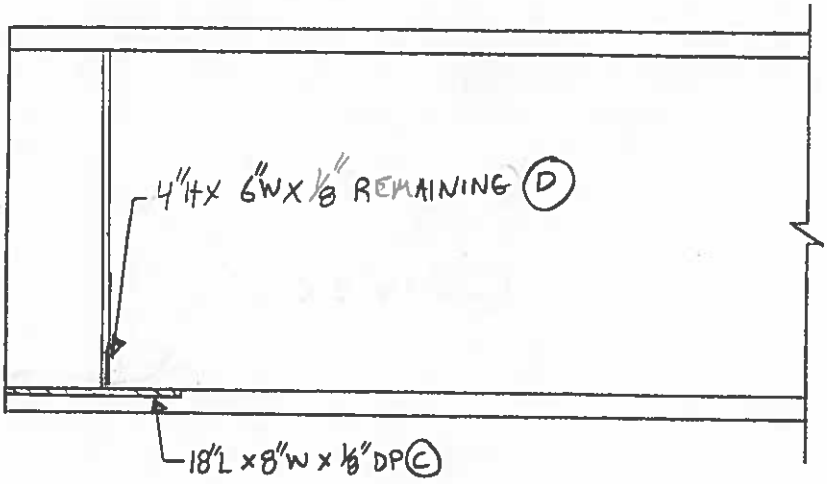

SPAN E, BEAM 8
EAST ELEV. AT P4

REVISION 1	DATE	CREW	COMPANY	REVISION 3	DATE	CREW	COMPANY
REVISION 2	DATE	CREW	COMPANY	REVISION 4	DATE	CREW	COMPANY

Dewberry
59 Elm Street, Suite 101
New Haven, CT 06510

FIELD NOTES

JOB NO.

BRIDGE NO: 03014 A

DATE: 7/1/2014

SHEET OF

CREW: RFP, PHH

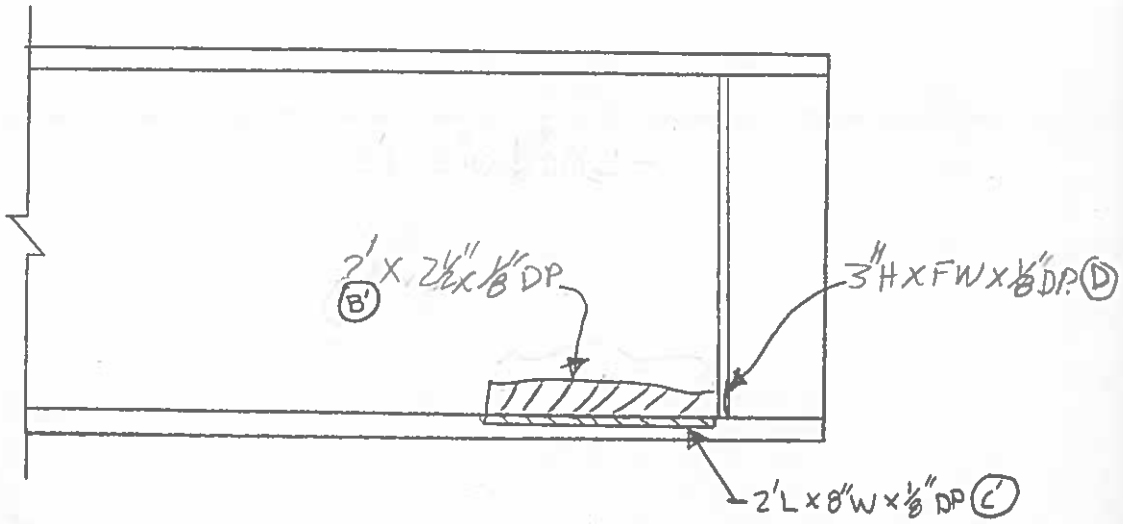

SPAN E, BEAM 9
WEST ELEV. AT P4

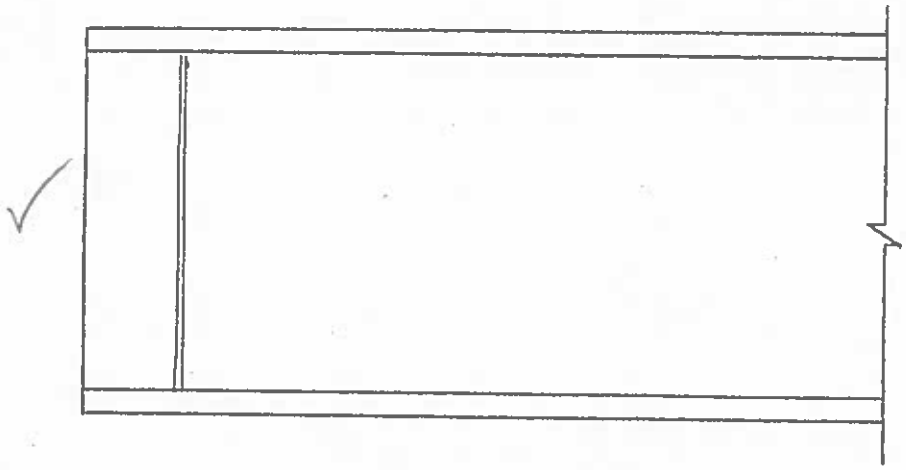

SPAN E, BEAM 9
EAST ELEV. AT P4

REVISION	DATE	CREW	COMPANY	REVISION	DATE	CREW	COMPANY
1				3			
2				4			

Dewberry
59 Elm Street, Suite 101
New Haven, CT 06510

FIELD NOTES

JOB NO.

BRIDGE NO: 03014A

DATE: 7/1/2014

SHEET OF

CREW: RFP, PHH

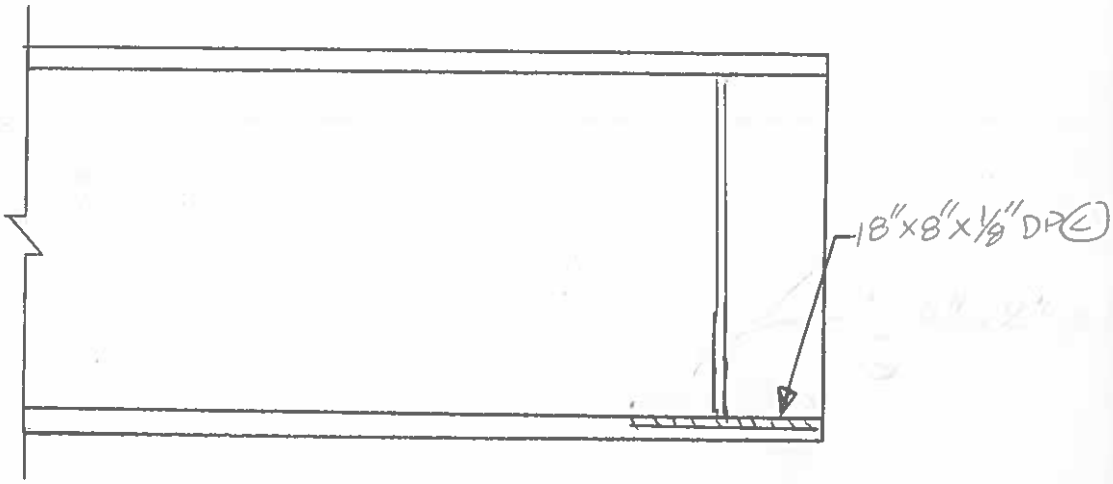

SPAN E, BEAM 10
WEST ELEV. AT P4

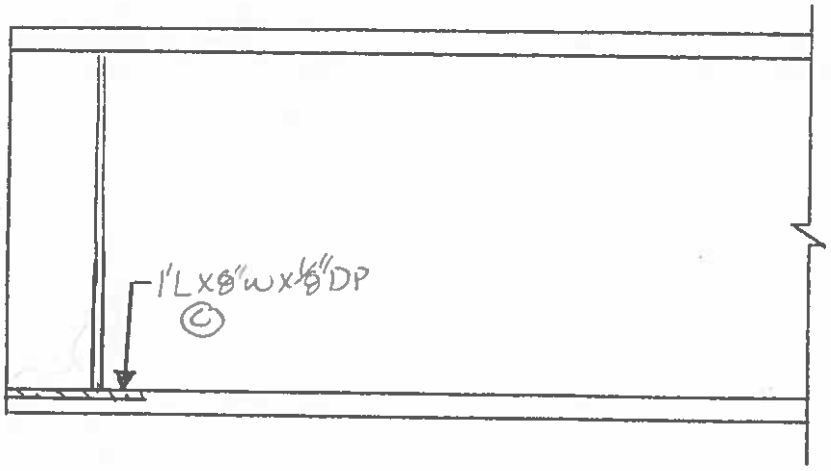

SPAN E, BEAM 10
EAST ELEV. AT P4

REVISION	DATE	CREW	COMPANY	REVISION	DATE	CREW	COMPANY
1				3			
2				4			

Dewberry
59 Elm Street, Suite 101
New Haven, CT 06510

FIELD NOTES	JOB NO.	BRIDGE NO: 03014A
	DATE: 7/1/2014	SHEET OF
	CREW: RFP, PHH	

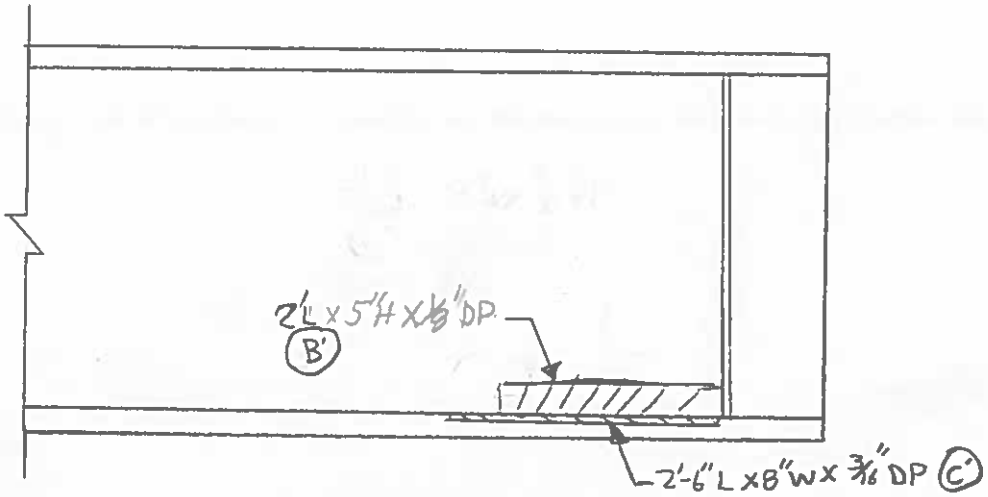

SPAN E, BEAM 11
WEST ELEV. AT P4

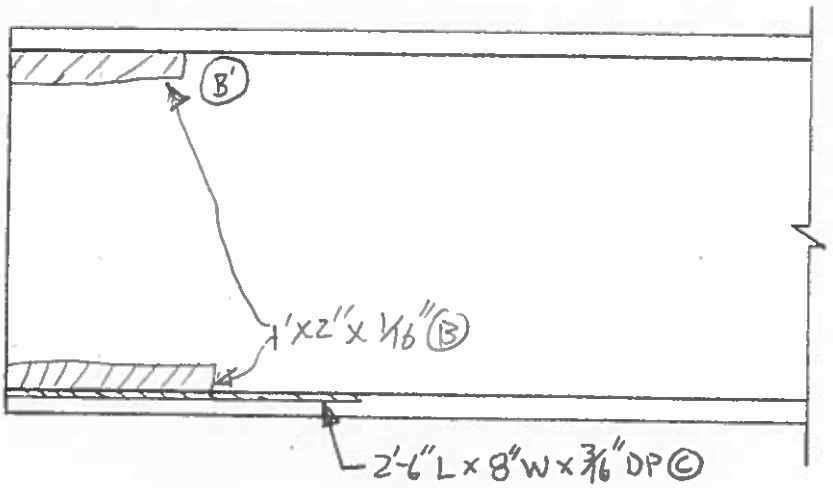

SPAN E, BEAM 11
EAST ELEV. AT P4

REVISION 1	DATE	CREW	COMPANY	REVISION 3	DATE	CREW	COMPANY
REVISION 2	DATE	CREW	COMPANY	REVISION 4	DATE	CREW	COMPANY

Dewberry
59 Elm Street, Suite 101
New Haven, CT 06510

FIELD NOTES

JOB NO.

BRIDGE NO: 03014A

DATE: 7/1/14

SHEET OF

CREW: RFP, PHH

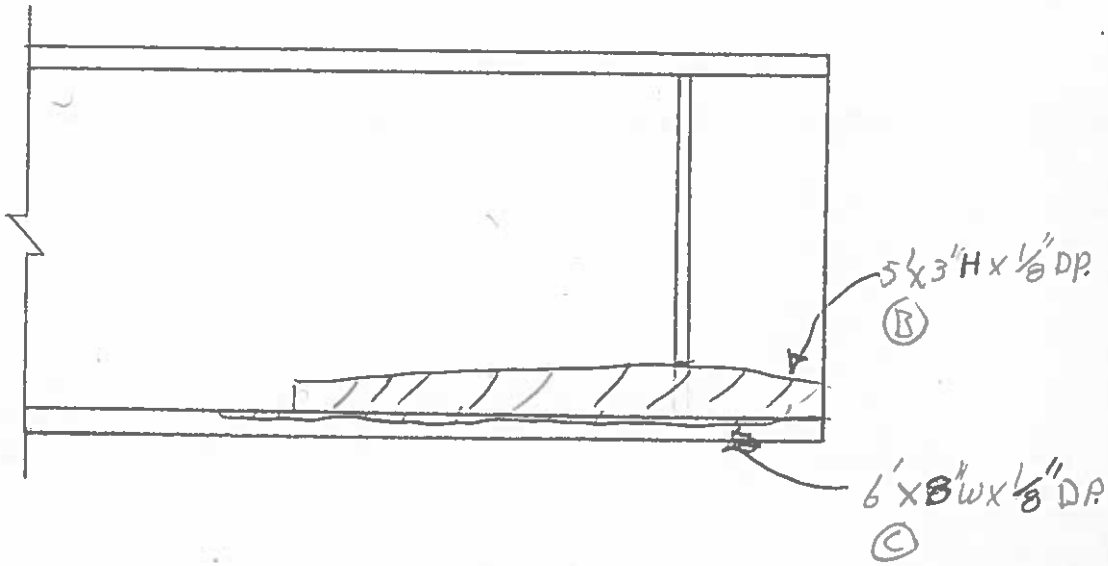

SPAN E, BEAM 1
EAST ELEV. AT P5

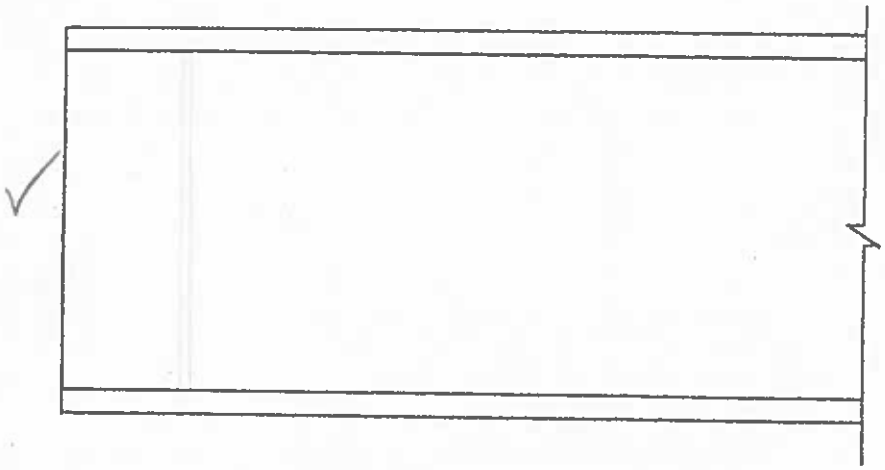

SPAN E, BEAM 1
WEST ELEV. AT P5

REVISION 1	DATE	CREW	COMPANY	REVISION 3	DATE	CREW	COMPANY
REVISION 2	DATE	CREW	COMPANY	REVISION 4	DATE	CREW	COMPANY

Dewberry®	FIELD NOTES	JOB NO.	BRIDGE NO: 03014 A
59 Elm Street, Suite 101 New Haven, CT 06510		DATE: 7/9/2014	SHEET OF
		CREW: RFP, PHH	

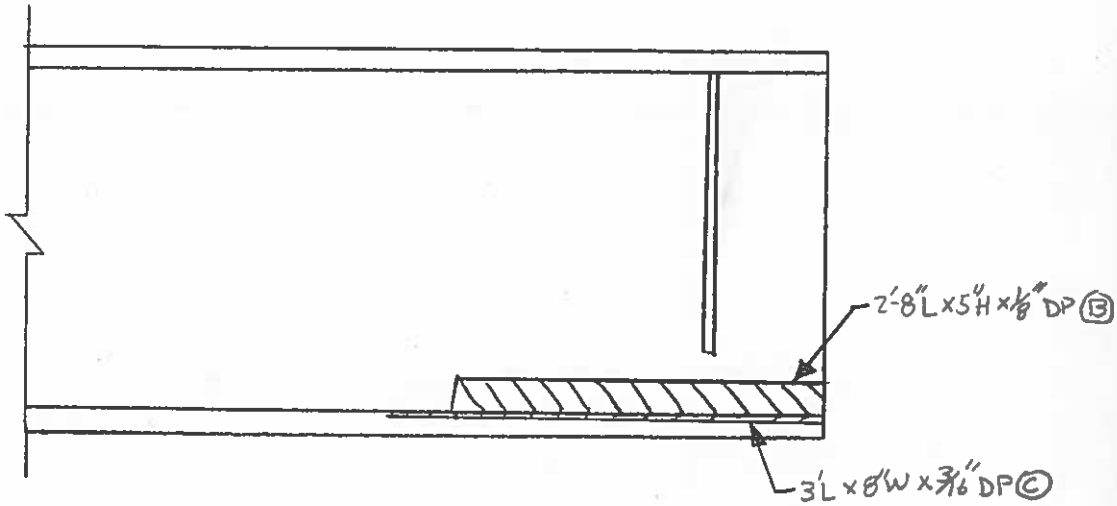

SPAN E, BEAM 2
EAST ELEV. AT P5

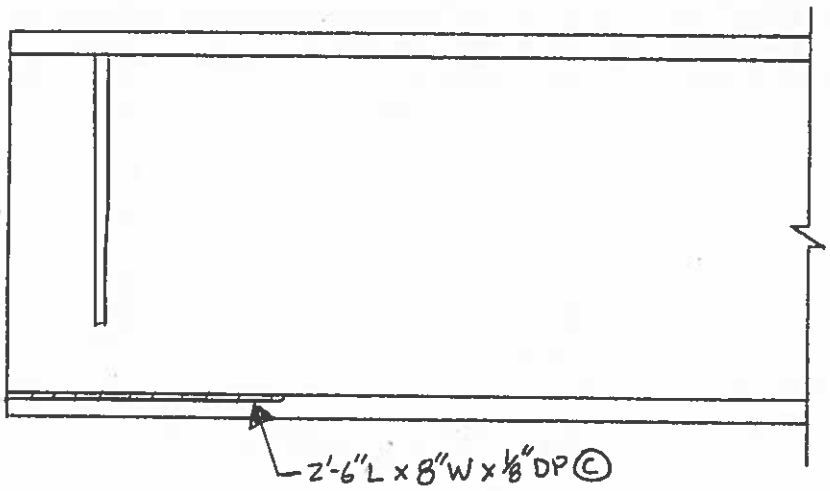

SPAN E, BEAM 2
WEST ELEV. AT P5

REVISION	DATE	CREW	COMPANY	REVISION	DATE	CREW	COMPANY
1				3			
2				4			

Dewberry
59 Elm Street, Suite 101
New Haven, CT 06510

FIELD NOTES

JOB NO.

BRIDGE NO: 03014A

DATE: 7/9/2014

SHEET OF

CREW: RFP, PHH

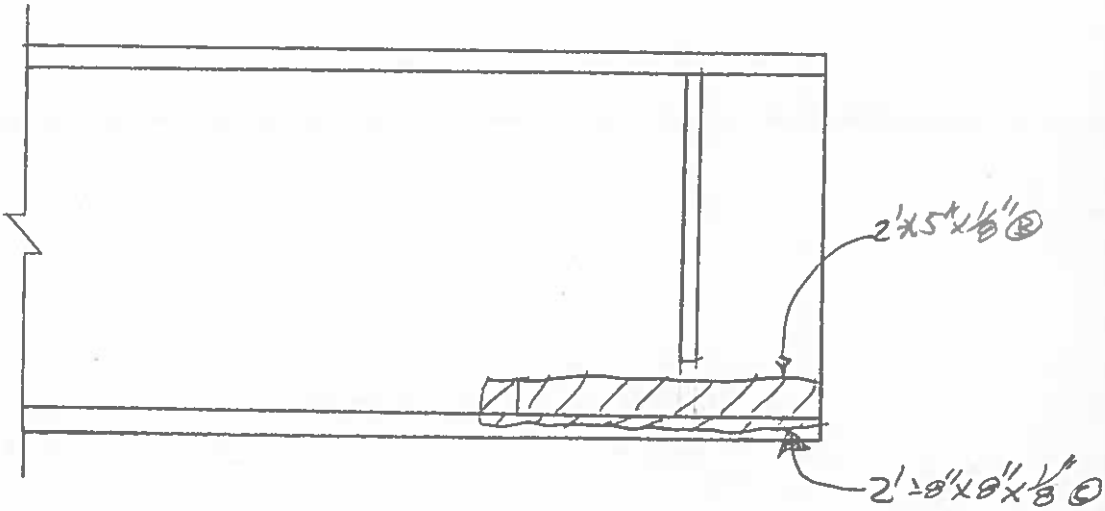

SPAN E, BEAM 3
EAST ELEV. AT P5

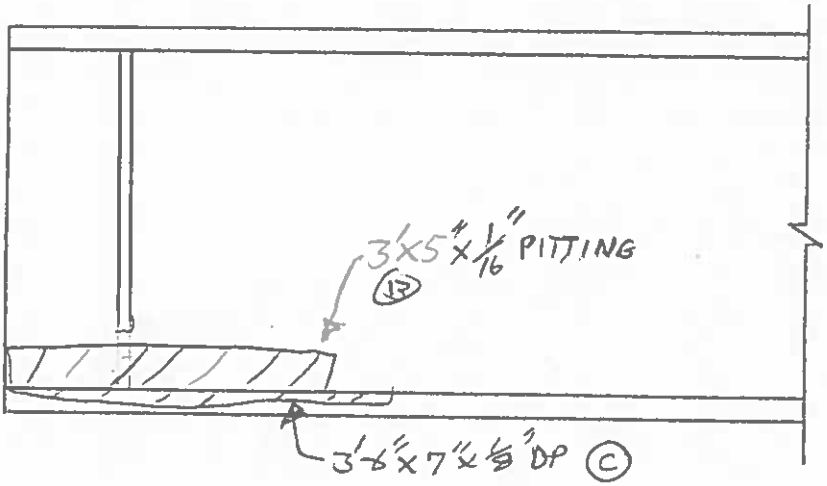

SPAN E, BEAM 3
WEST ELEV. AT P5

REVISION 1	DATE	CREW	COMPANY	REVISION 3	DATE	CREW	COMPANY
REVISION 2	DATE	CREW	COMPANY	REVISION 4	DATE	CREW	COMPANY

Dewberry
59 Elm Street, Suite 101
New Haven, CT 06510

FIELD NOTES	JOB NO.	BRIDGE NO: 03014 A
	DATE: 7/9/2014	SHEET OF
	CREW: RFP, PHI	

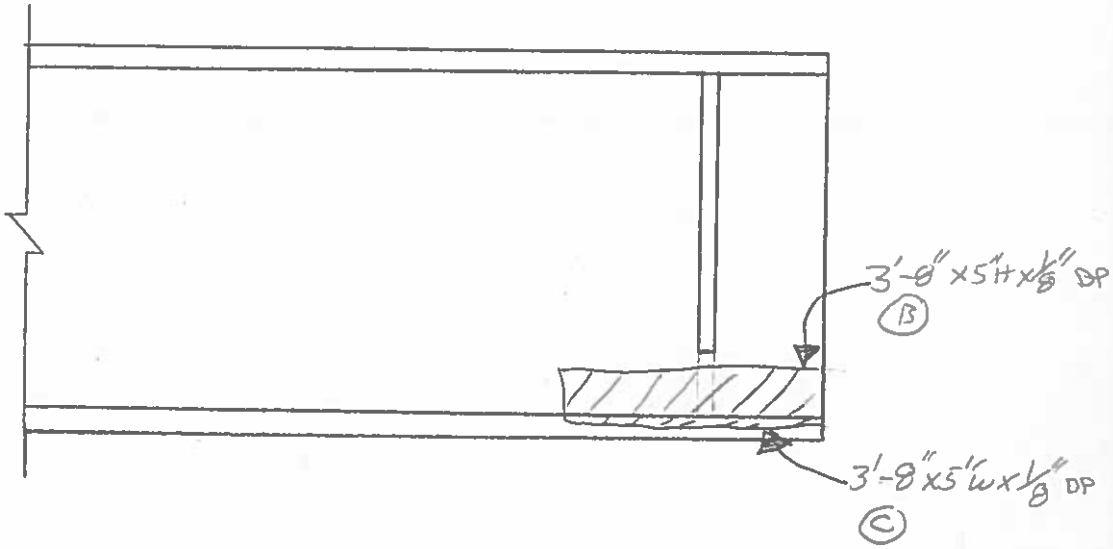

SPAN E, BEAM 4
EAST ELEV. AT P5

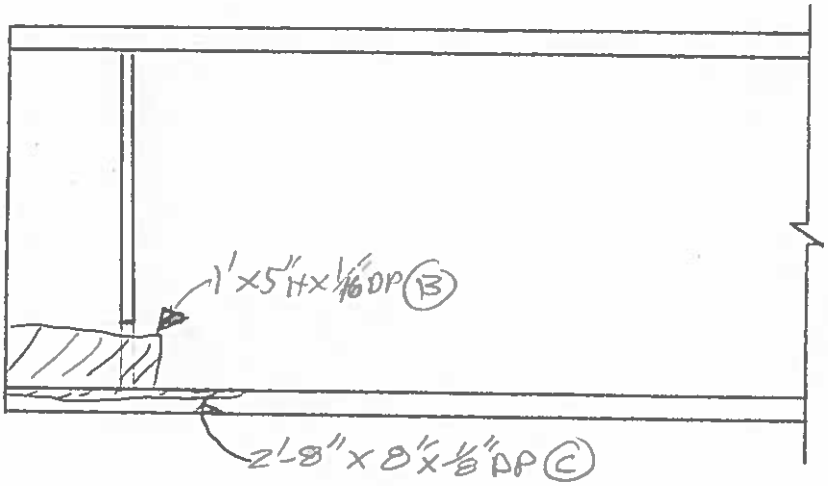

SPAN E, BEAM 4
WEST ELEV. AT P5

REVISION 1	DATE	CREW	COMPANY	REVISION 3	DATE	CREW	COMPANY
REVISION 2	DATE	CREW	COMPANY	REVISION 4	DATE	CREW	COMPANY

Dewberry®	FIELD NOTES	JOB NO.	BRIDGE NO: 03014A
59 Elm Street, Suite 101 New Haven, CT 06510		DATE: 7/9/2014	SHEET OF
		CREW: RFP, PHH	

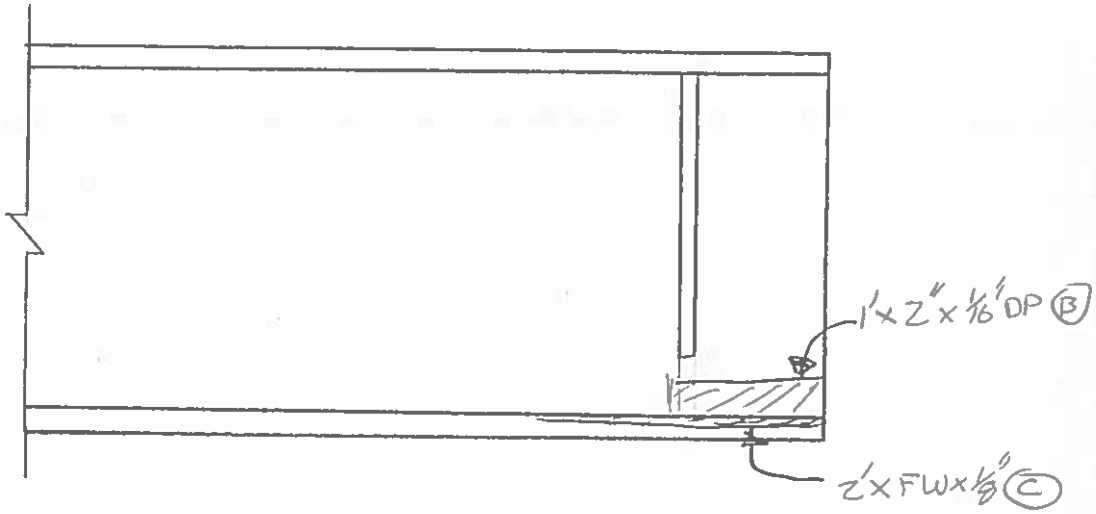

SPAN E, BEAM 6
EAST ELEV. AT P5

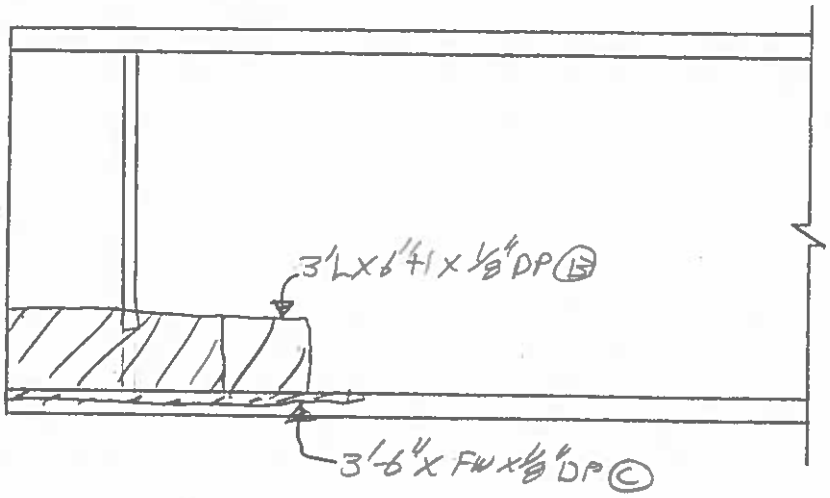

SPAN E, BEAM 5
WEST ELEV. AT P5

REVISION 1	DATE	CREW	COMPANY	REVISION 3	DATE	CREW	COMPANY
REVISION 2	DATE	CREW	COMPANY	REVISION 4	DATE	CREW	COMPANY

Dewberry
59 Elm Street, Suite 101
New Haven, CT 06510

FIELD NOTES	JOB NO.	BRIDGE NO: 03014A
	DATE: 7/11/2014	SHEET OF
	CREW: RFP, PHH	

- TOP OF WEB TIPPED 1/4" WEST OVER 2'

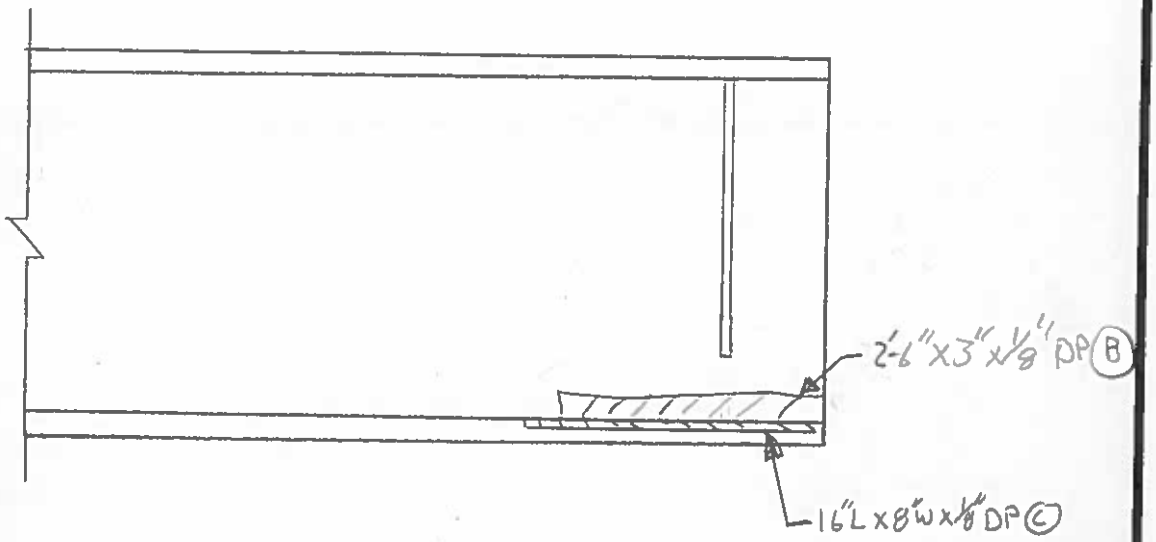

SPAN E, BEAM 6
EAST ELEV. AT P5

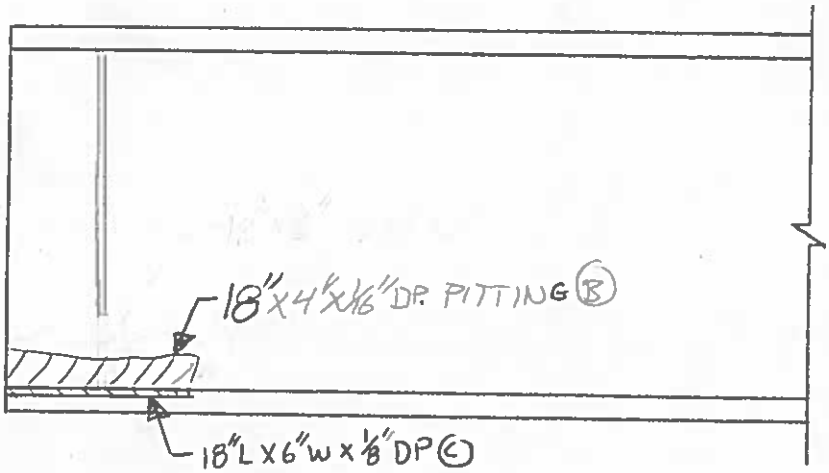

SPAN E, BEAM 6
WEST ELEV. AT P5

REVISION 1 DATE	CREW	COMPANY	REVISION 3 DATE	CREW	COMPANY
REVISION 2 DATE	CREW	COMPANY	REVISION 4 DATE	CREW	COMPANY

Dewberry
59 Elm Street, Suite 101
New Haven, CT 06510

FIELD NOTES

JOB NO.

BRIDGE NO: 03014 A

DATE: 7/1/2014

SHEET OF

CREW: RFP, PHH

• TOP OF WEB TILTED 1/4" WEST OVER 2'

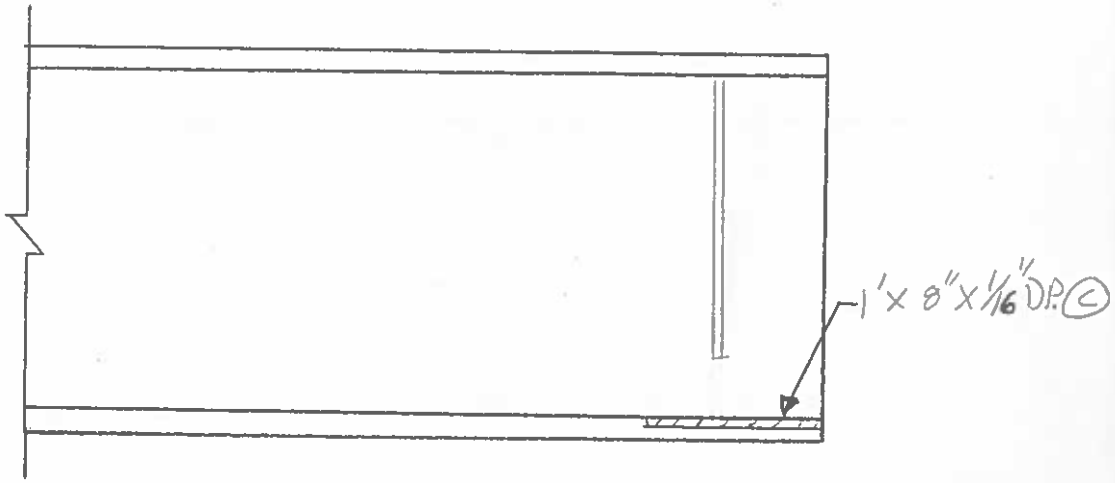

SPAN E, BEAM 7
EAST ELEV. AT P5

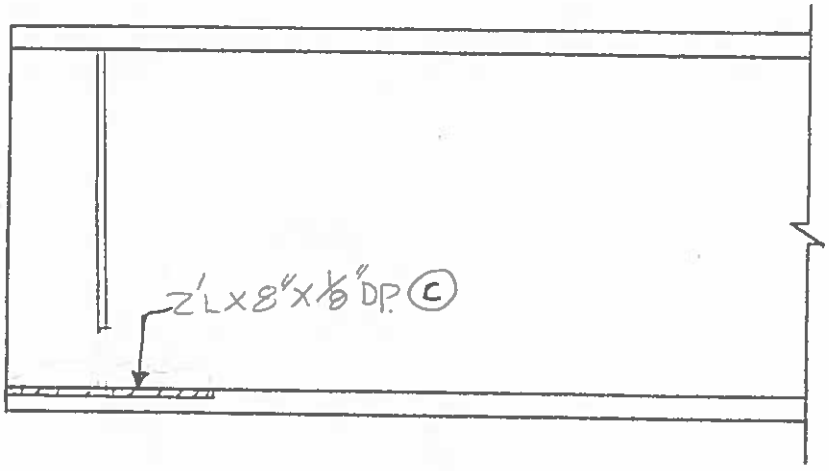

SPAN E, BEAM 7
WEST ELEV. AT P5

REVISION	DATE	CREW	COMPANY	REVISION	DATE	CREW	COMPANY
1				3			
2				4			

Dewberry
59 Elm Street, Suite 101
New Haven, CT 06510

FIELD NOTES

JOB NO.

BRIDGE NO: 03014 A

DATE: 7/1/2014

SHEET OF

CREW: RFP, PHH

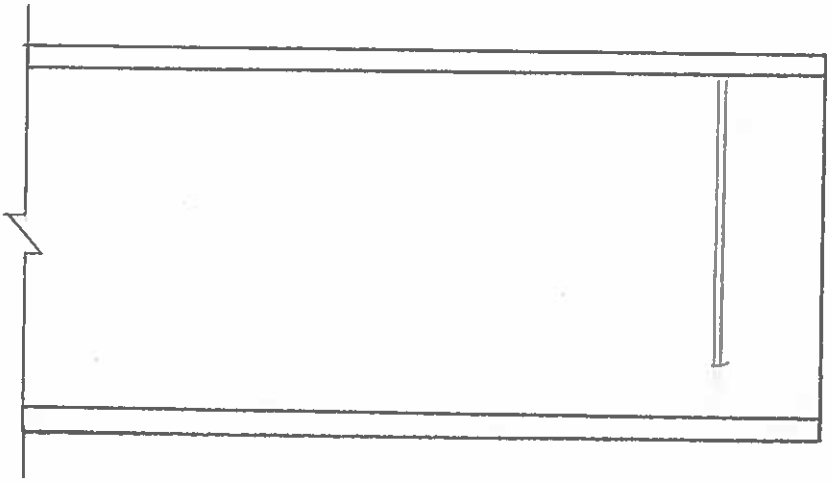

SPAN E, BEAM 8
EAST ELEV. AT P5

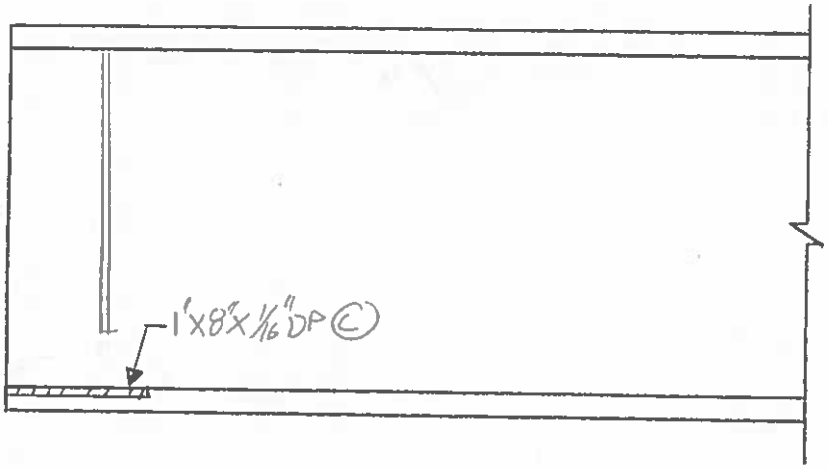

SPAN E, BEAM 8
WEST ELEV. AT P5

REVISION 1	DATE	CREW	COMPANY	REVISION 3	DATE	CREW	COMPANY
REVISION 2	DATE	CREW	COMPANY	REVISION 4	DATE	CREW	COMPANY

Dewberry
59 Elm Street, Suite 101
New Haven, CT 06510

FIELD NOTES

JOB NO.

BRIDGE NO: 03014A

DATE: 7/1/2014

SHEET OF

CREW: RFP, PHH

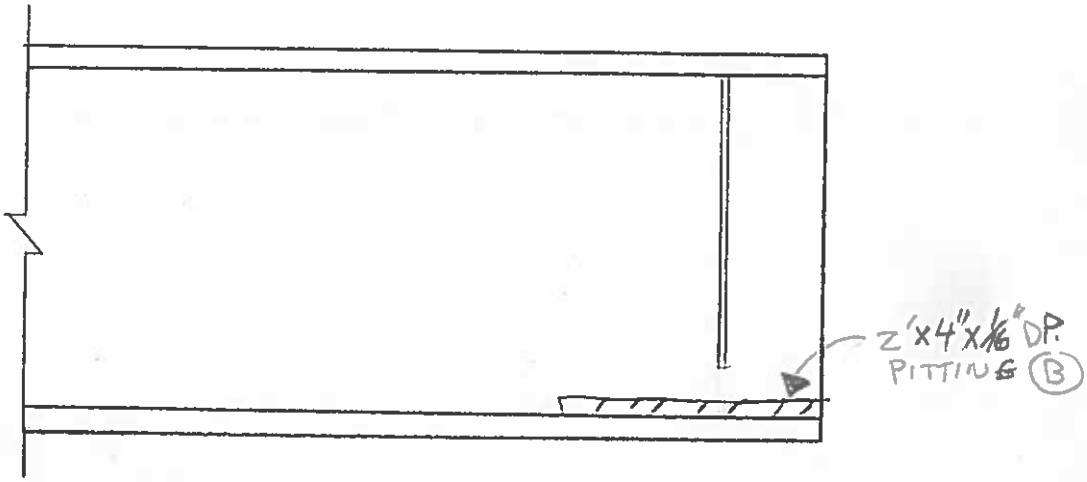

SPAN E, BEAM 9
EAST ELEV. AT P5

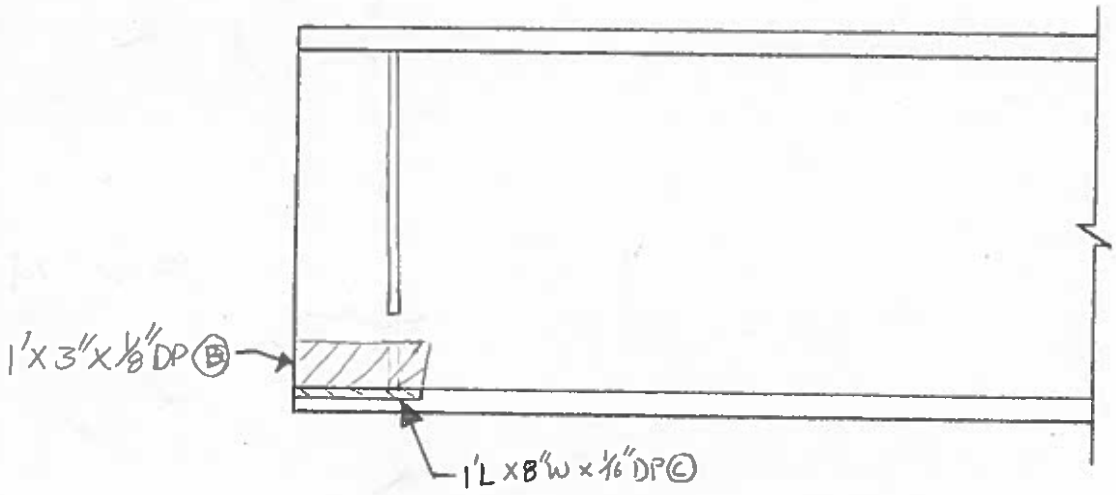

SPAN E, BEAM 9
WEST ELEV. AT P5

REVISION	DATE	CREW	COMPANY	REVISION	DATE	CREW	COMPANY
1				3			
2				4			

Dewberry® 59 Elm Street, Suite 101 New Haven, CT 06510	FIELD NOTES	JOB NO.	BRIDGE NO: 03014 A
		DATE: 7/1/2014	SHEET OF
		CREW: RFP, PHH	

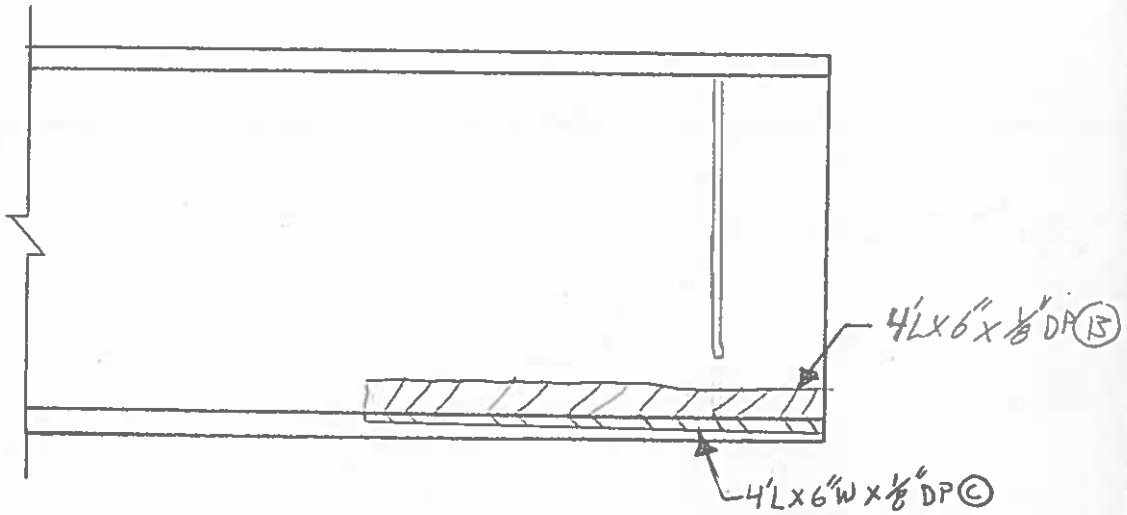

SPAN E, BEAM 10
EAST ELEV. AT P5

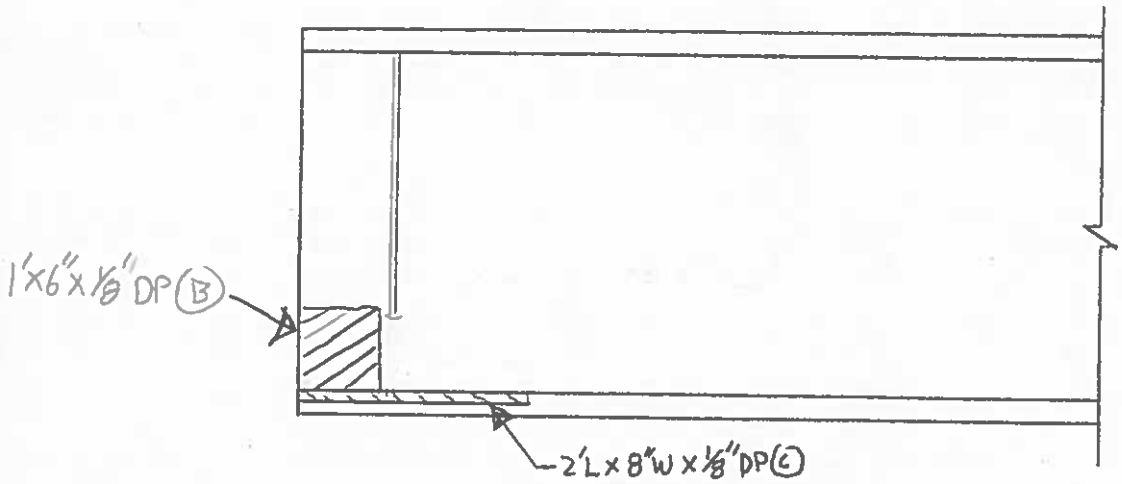

SPAN E, BEAM 10
WEST ELEV. AT P5

REVISION 1 DATE	CREW	COMPANY	REVISION 3 DATE	CREW	COMPANY
REVISION 2 DATE	CREW	COMPANY	REVISION 4 DATE	CREW	COMPANY

Dewberry® 59 Elm Street, Suite 101 New Haven, CT 06510	FIELD NOTES	JOB NO.	BRIDGE NO: 03014 A
		DATE: 7/1/2014	SHEET OF
		CREW: RFP, PHH	

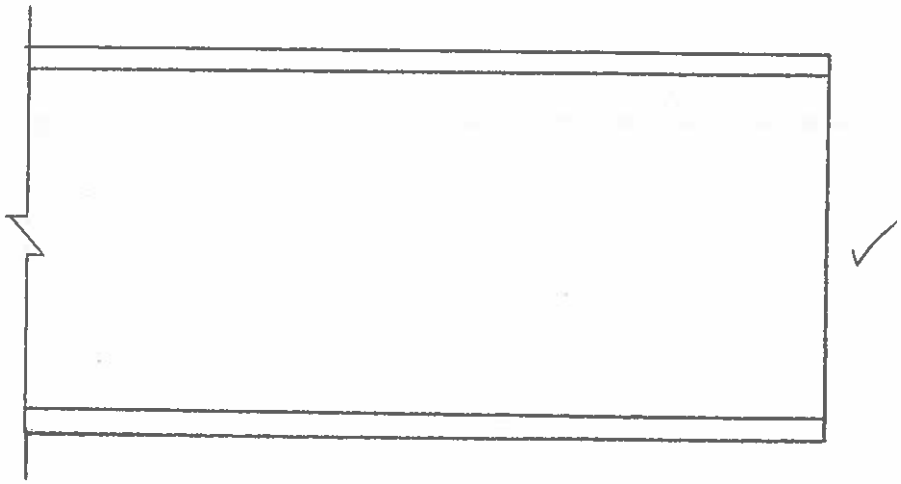

SPAN E, BEAM 11
EAST ELEV. AT P5

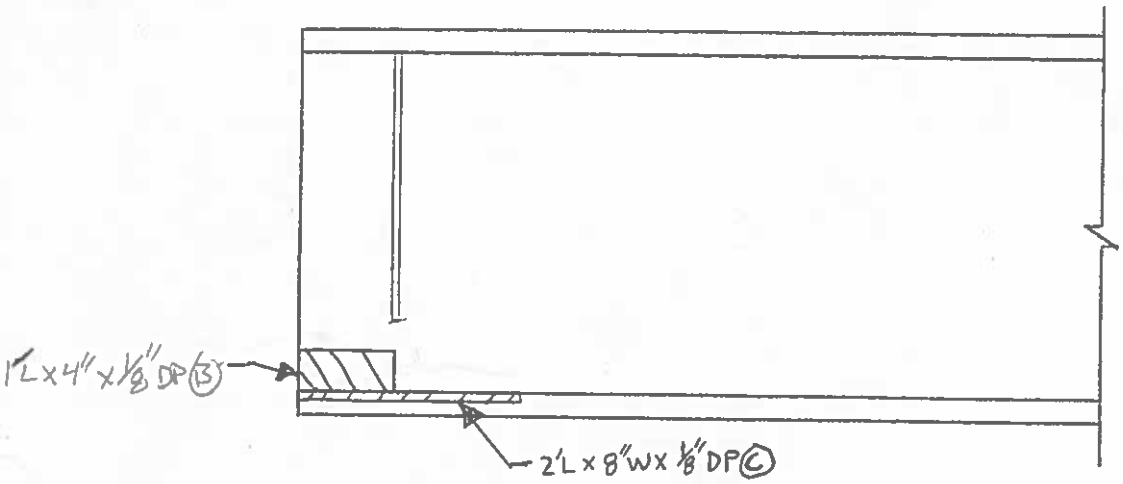

SPAN E, BEAM 11
WEST ELEV. AT P5

REVISION 1	DATE	CREW	COMPANY	REVISION 3	DATE	CREW	COMPANY
REVISION 2	DATE	CREW	COMPANY	REVISION 4	DATE	CREW	COMPANY

Dewberry® 59 Elm Street, Suite 101 New Haven, CT 06510	FIELD NOTES	JOB NO.	BRIDGE NO: 03014 A
		DATE: 7/8/14	SHEET OF
		CREW: RFP, PHH	

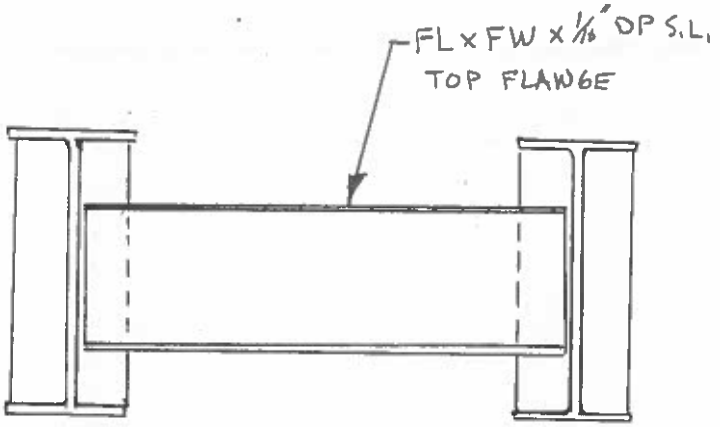

BAY 1 END DIAPHRAGM

SPAN E @ P5

REVISION 1	DATE	CREW	COMPANY	REVISION 3	DATE	CREW	COMPANY
REVISION 2	DATE	CREW	COMPANY	REVISION 4	DATE	CREW	COMPANY

Dewberry® 59 Elm Street, Suite 101 New Haven, CT 06510	FIELD NOTES	JOB NO.	BRIDGE NO: 03014A
		DATE: 7/8/14	SHEET OF
		CREW: RFP, PHH	

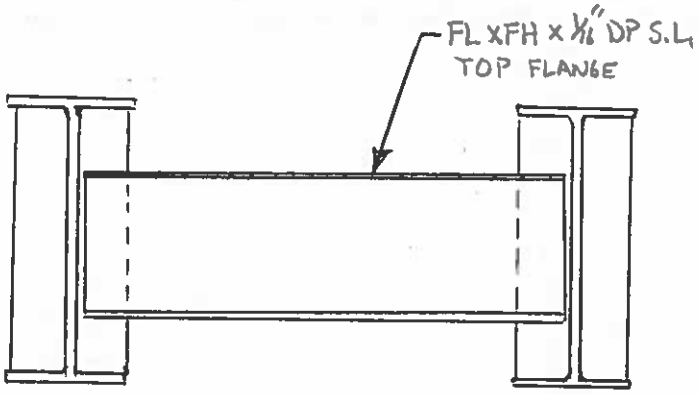

BAY 2 END DIAPHRAGM

SPAN E @ P5

REVISION 1	DATE	CREW	COMPANY	REVISION 3	DATE	CREW	COMPANY
REVISION 2	DATE	CREW	COMPANY	REVISION 4	DATE	CREW	COMPANY

SPAN F

FIELD NOTES

PREPARED BY: Garg Consulting Services, Inc.

PROJ. NO. 170-3013

DATE: 11/08/2010

CREW: PDG, MD, SN, GF

BRIDGE NO. 3014A

SHEET 5 of 19

Revision	Date	Crew	Company
2	7/1/14 & 7/9/14	RFP, PHH	DEW
1	9/8/12	PKG, AKC	GM2

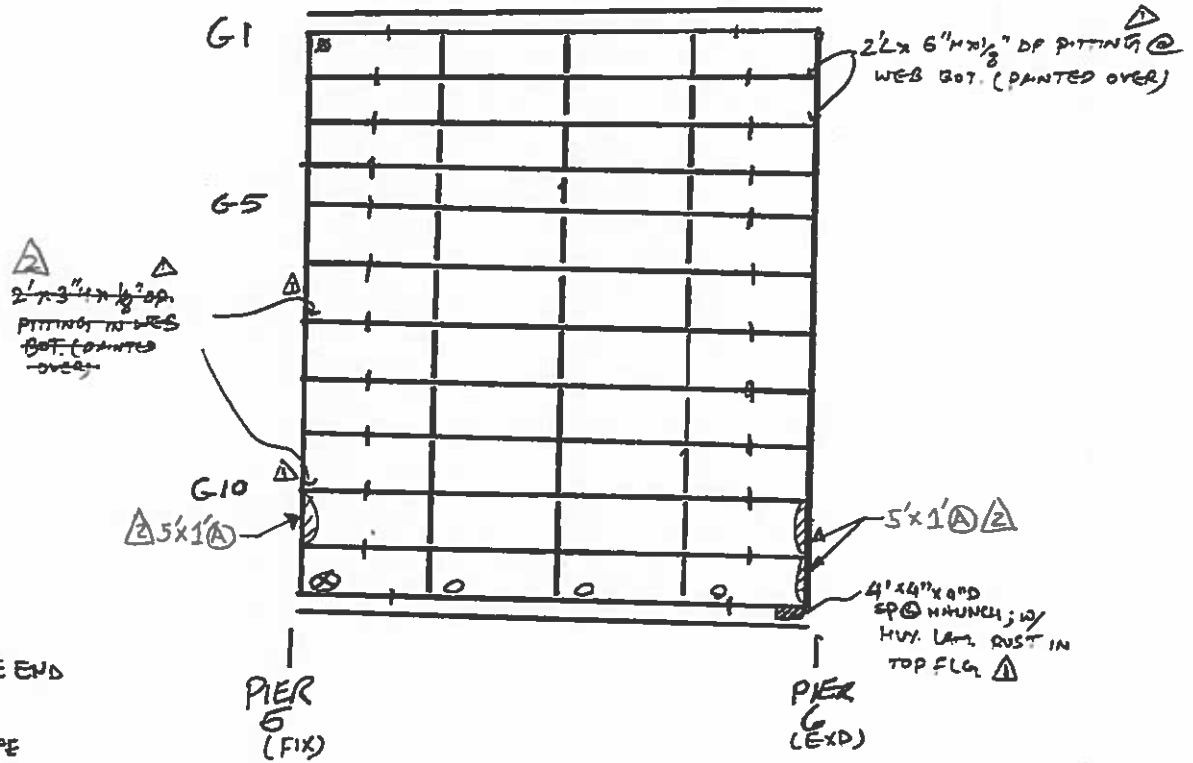

— WELDED BF COVER PLATE END CHECKED 100% HANDS ON

O — PVC WEEP

⊗ — SWIPPER FREE FALL PIPE

LEGEND

- HOLLOW AREA
- SHALLOW REBAR
- SPALL AREA
- SPALL AREA WITH EXPOSED REBAR
- MAP CRACKS OR HAIRLINE MAP CRACKS
- HAIRLINE CRACKS (HLC) OR CRACKS (CR)
- HONEY COMB AREA
- SCALE AREA (HVY, MED, OR LT)

GENERAL NOTES:

- SEE SPAN A GENERAL NOTES.
- FASCIA GIRDERS HAVE UP TO 50% AREA OF PEELING PAINT W/ LT RUST.

FRAMING PLAN SPAN F

SEE DETAILED SHEETS FOR MORE INFORMATION

Dewberry
59 Elm Street, Suite 101
New Haven, CT 06510

FIELD NOTES	JOB NO.	BRIDGE NO: 03014 A
	DATE: 7/9/2014	SHEET OF
	CREW: RFP, PHH	

* WEB BOWED WEST 1/8" OVER WEB HEIGHT

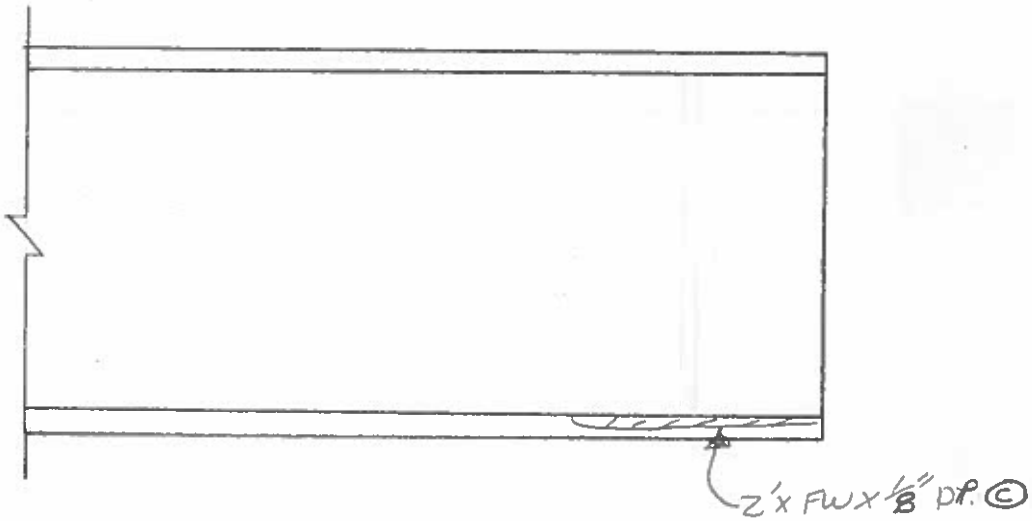

SPAN F, BEAM 1
WEST ELEV. AT P5

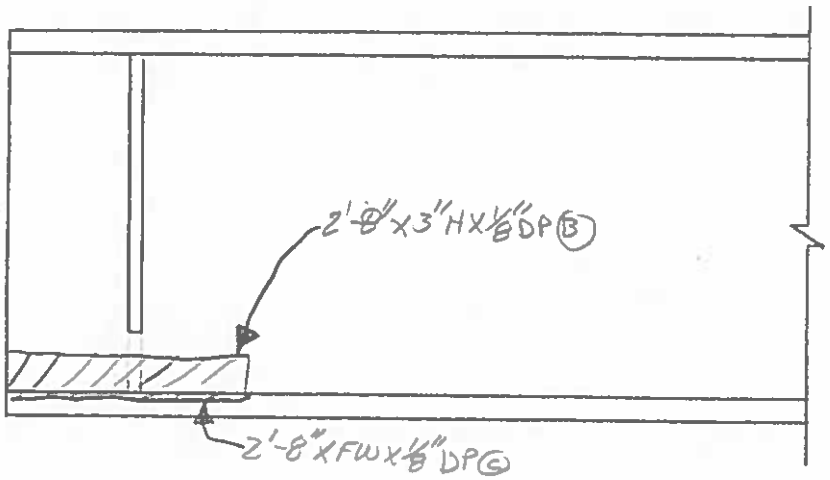

SPAN F, BEAM 1
EAST ELEV. AT P5

REVISION	DATE	CREW	COMPANY	REVISION	DATE	CREW	COMPANY
1				3			
2				4			

Dewberry® 59 Elm Street, Suite 101 New Haven, CT 06510	FIELD NOTES	JOB NO.	BRIDGE NO: 03014 A
		DATE: 7/9/2014	SHEET OF
		CREW: RFP, PHH	

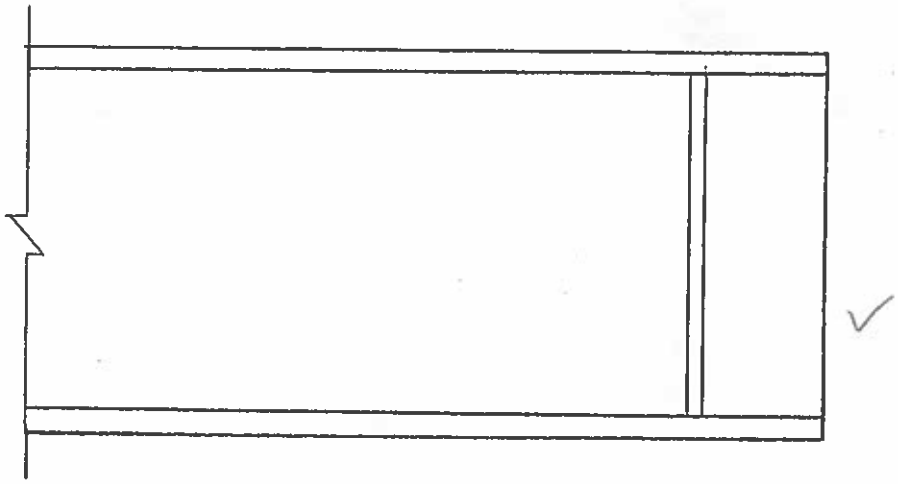

SPAN F, BEAM 2
WEST ELEV. AT P5

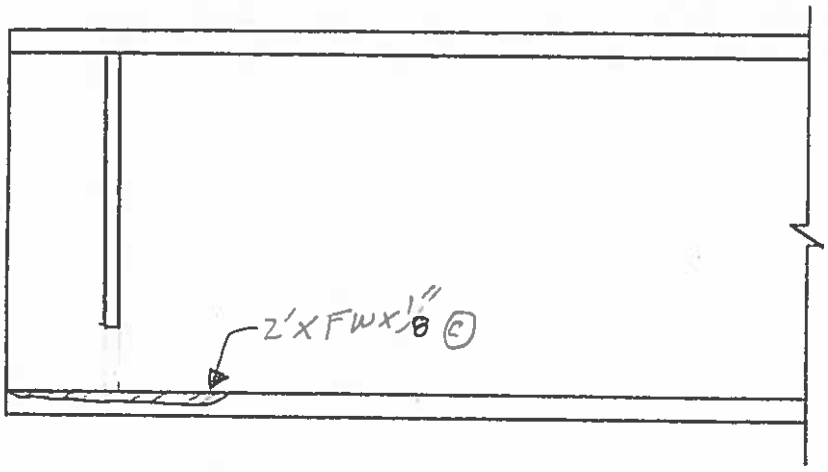

SPAN F, BEAM 2
EAST ELEV. AT P5

REVISION 1	DATE	CREW	COMPANY	REVISION 3	DATE	CREW	COMPANY
REVISION 2	DATE	CREW	COMPANY	REVISION 4	DATE	CREW	COMPANY

Dewberry	FIELD NOTES	JOB NO.	BRIDGE NO: 03014 A
59 Elm Street, Suite 101 New Haven, CT 06510		DATE: 7/9/14	SHEET OF
		CREW: RFP, PHH	

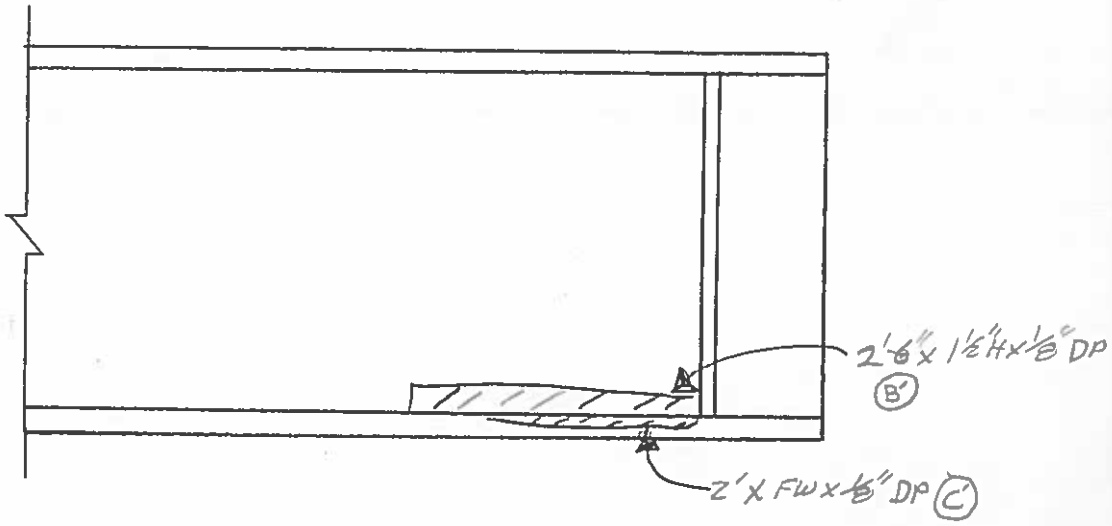

SPAN F, BEAM 3
WEST ELEV. AT P5

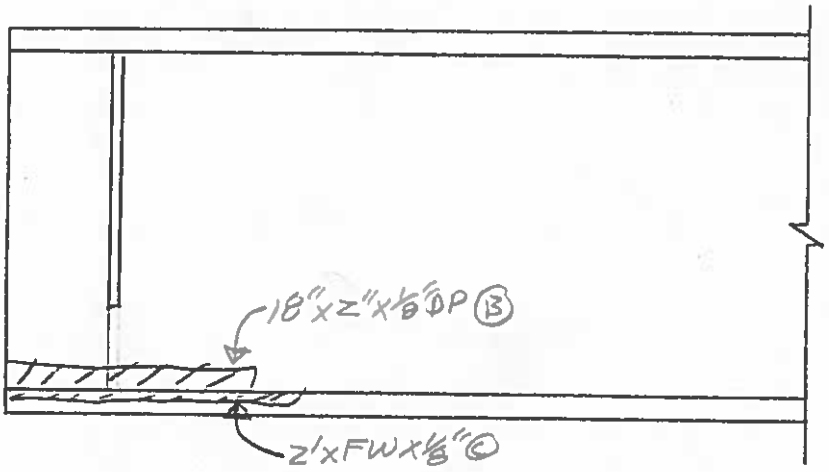

SPAN F, BEAM 3
EAST ELEV. AT P5

REVISION	DATE	CREW	COMPANY	REVISION	DATE	CREW	COMPANY
1				3			
2				4			

Dewberry	FIELD NOTES	JOB NO.	BRIDGE NO: 03014 A
59 Elm Street, Suite 101 New Haven, CT 06510		DATE: 7/9/2014	SHEET OF
		CREW: RFP, PHH	

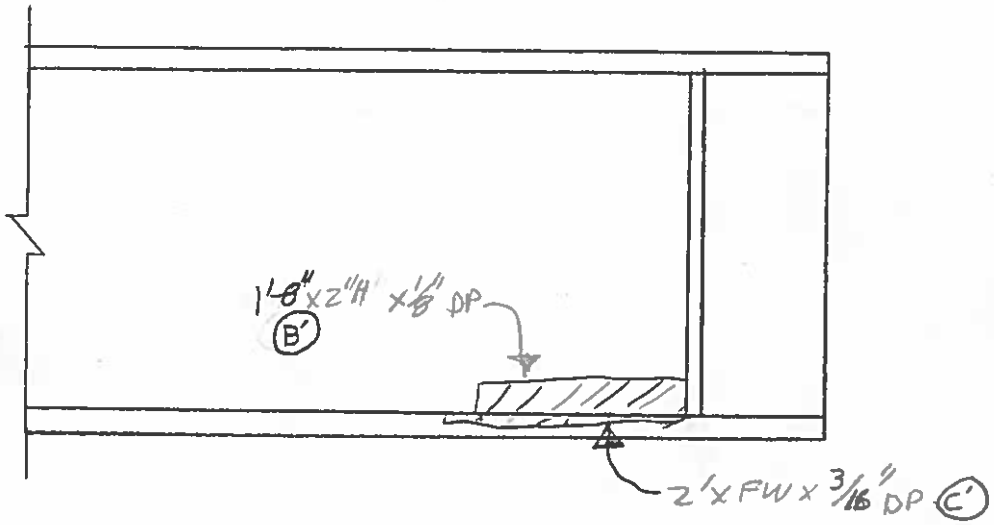

SPAN F, BEAM 4
WEST ELEV. AT P5

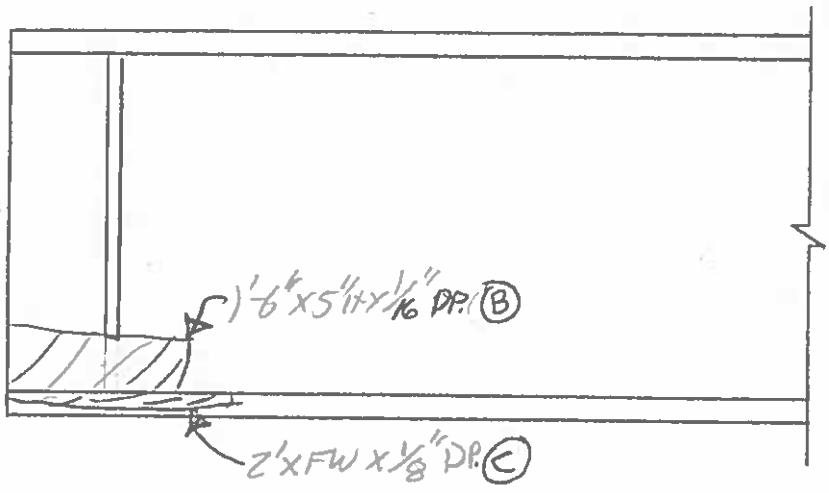

SPAN F, BEAM 4
EAST ELEV. AT P5

REVISION 1	DATE	CREW	COMPANY	REVISION 3	DATE	CREW	COMPANY
REVISION 2	DATE	CREW	COMPANY	REVISION 4	DATE	CREW	COMPANY

Dewberry	FIELD NOTES	JOB NO.	BRIDGE NO: 03014 A
59 Elm Street, Suite 101 New Haven, CT 06510		DATE: 7/9/2014	SHEET OF
		CREW: RFP, PHH	

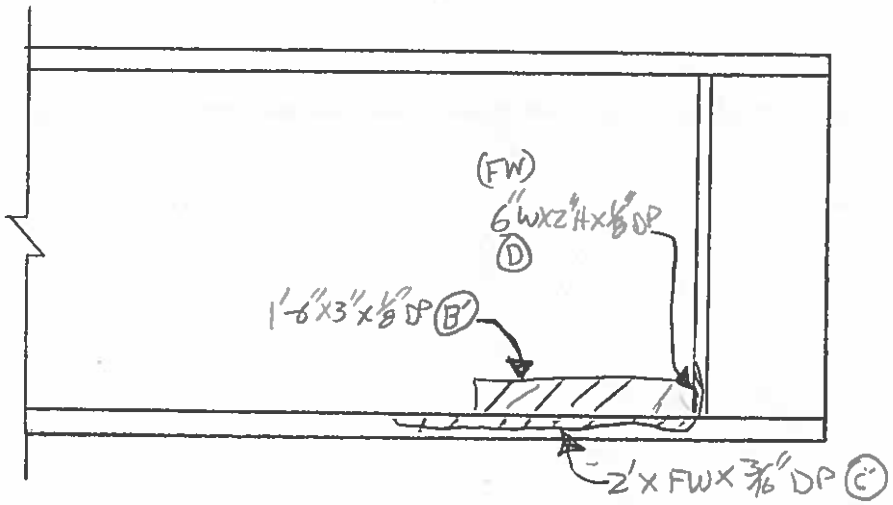

SPAN F, BEAM 5
WEST ELEV. AT P5

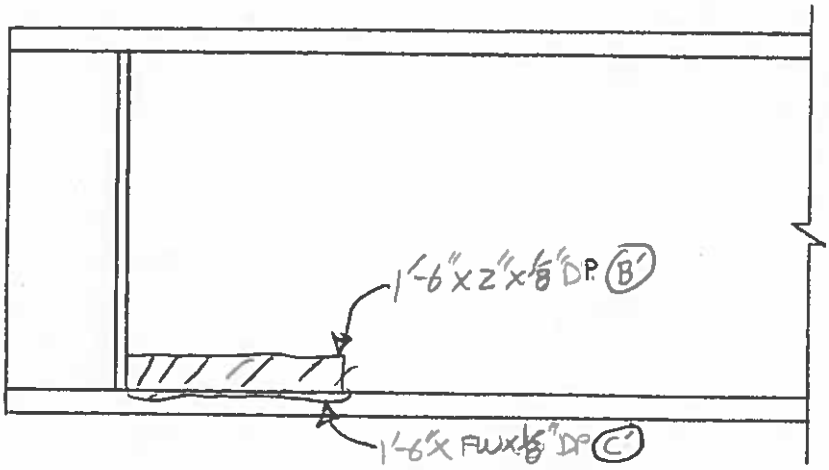

SPAN F, BEAM 5
EAST ELEV. AT P5

REVISION 1	DATE	CREW	COMPANY	REVISION 3	DATE	CREW	COMPANY
REVISION 2	DATE	CREW	COMPANY	REVISION 4	DATE	CREW	COMPANY

Dewberry® 59 Elm Street, Suite 101 New Haven, CT 06510	FIELD NOTES	JOB NO.	BRIDGE NO: 03014A
		DATE: 7/9/2014	SHEET OF
		CREW: RFP, PHH	

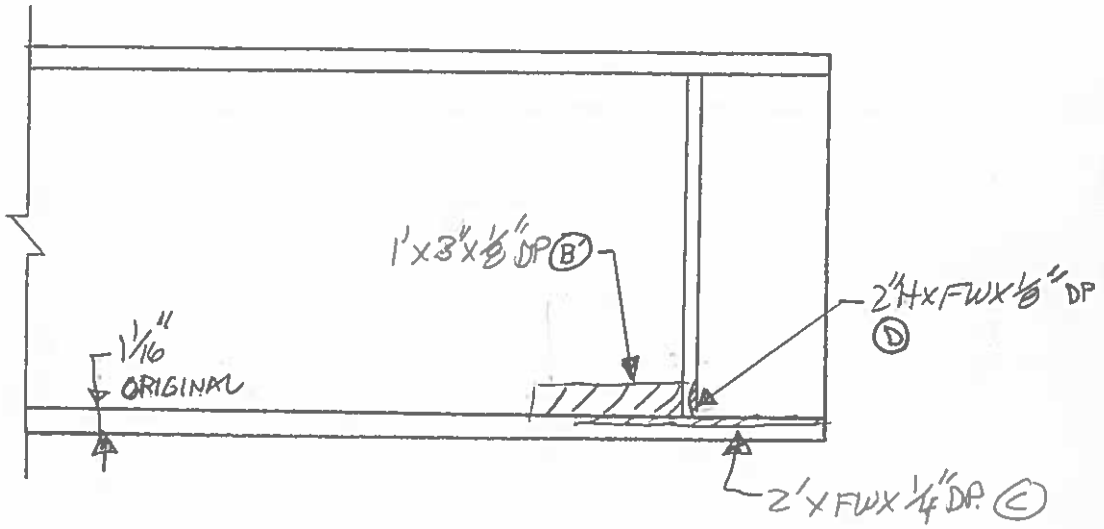

SPAN F, BEAM 6
WEST ELEV. AT P5

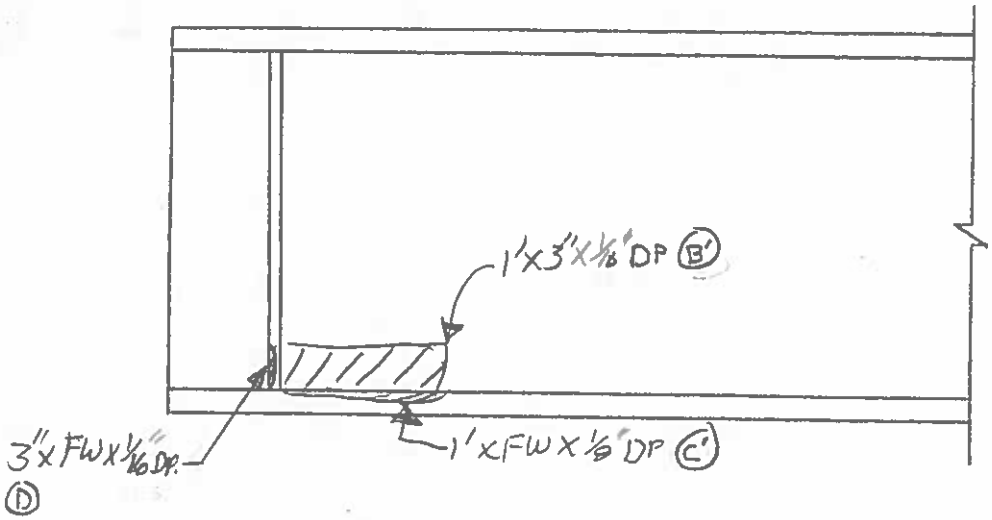

SPAN F, BEAM 6
EAST ELEV. AT P5

REVISION 1	DATE	CREW	COMPANY	REVISION 3	DATE	CREW	COMPANY
REVISION 2	DATE	CREW	COMPANY	REVISION 4	DATE	CREW	COMPANY

Dewberry
59 Elm Street, Suite 101
New Haven, CT 06510

FIELD NOTES

JOB NO.

BRIDGE NO: 03014 A

DATE: 7/1/2014

SHEET OF

CREW: RFP, PHT

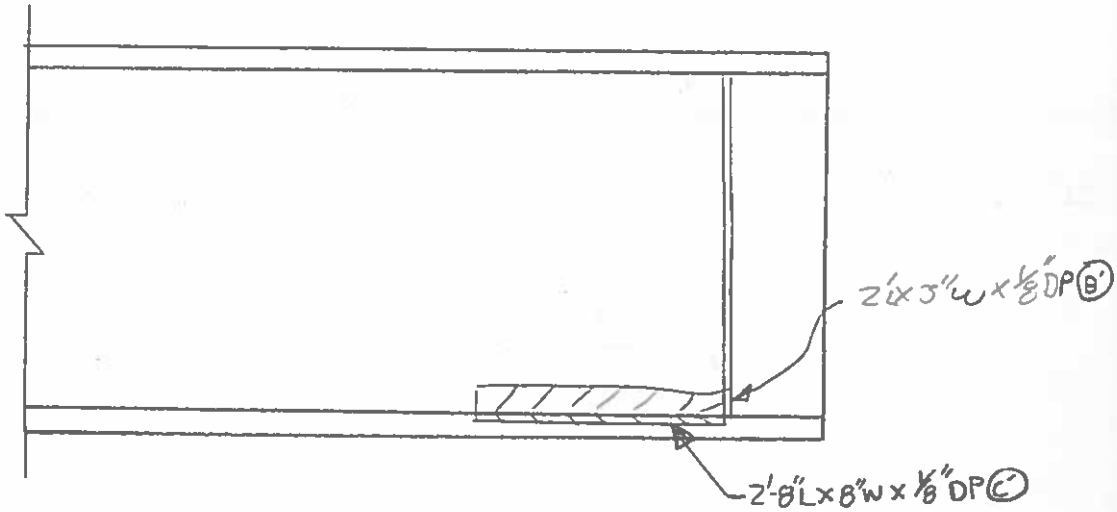

SPAN F, BEAM 7
WEST ELEV. AT P5

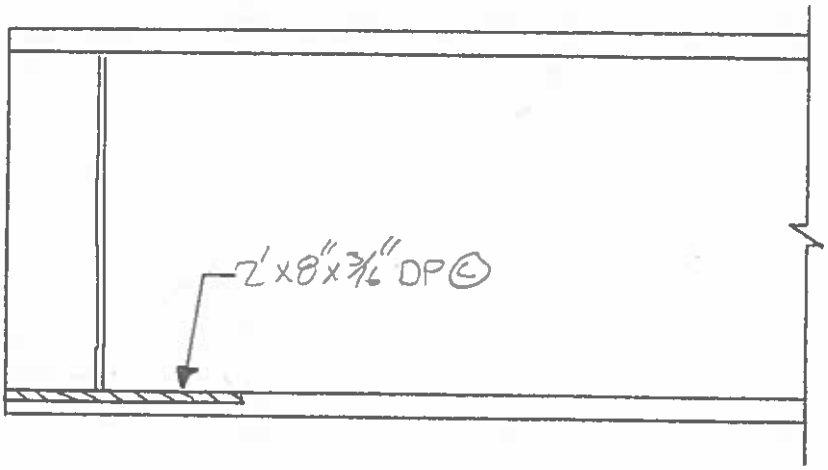

SPAN F, BEAM 7
EAST ELEV. AT P5

REVISION	DATE	CREW	COMPANY	REVISION	DATE	CREW	COMPANY
1				3			
2				4			

Dewberry
59 Elm Street, Suite 101
New Haven, CT 06510

FIELD NOTES

JOB NO.

BRIDGE NO: 03014 A

DATE: 7/1/2014

SHEET OF

CREW: RFP, PHH

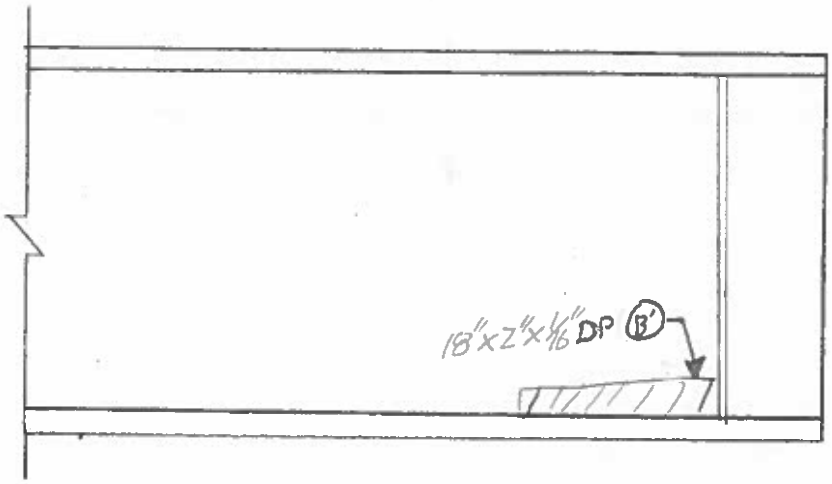

SPAN F, BEAM 8
WEST ELEV. AT PS

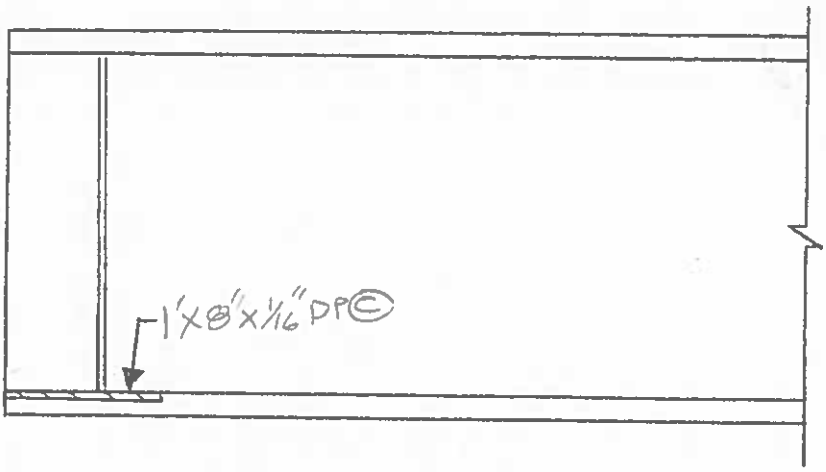

SPAN F, BEAM 8
EAST ELEV. AT PS

REVISION	DATE	CREW	COMPANY	REVISION	DATE	CREW	COMPANY
1				3			
2				4			

Dewberry® 59 Elm Street, Suite 101 New Haven, CT 06510	FIELD NOTES	JOB NO.	BRIDGE NO: 03014 A
		DATE: 7/1/2014	SHEET OF
		CREW: RFP, PHH	

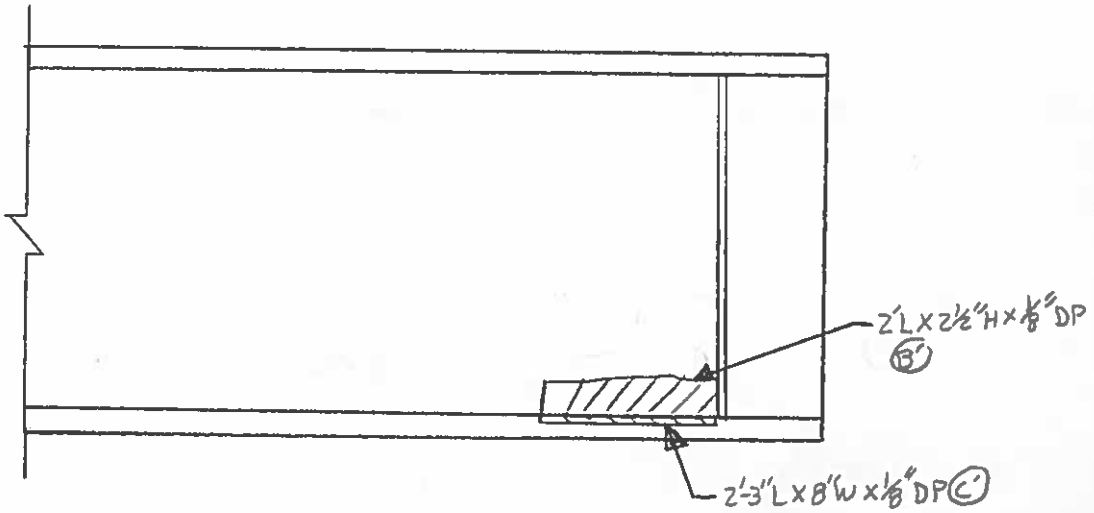

SPAN F, BEAM 9
WEST ELEV. AT P5

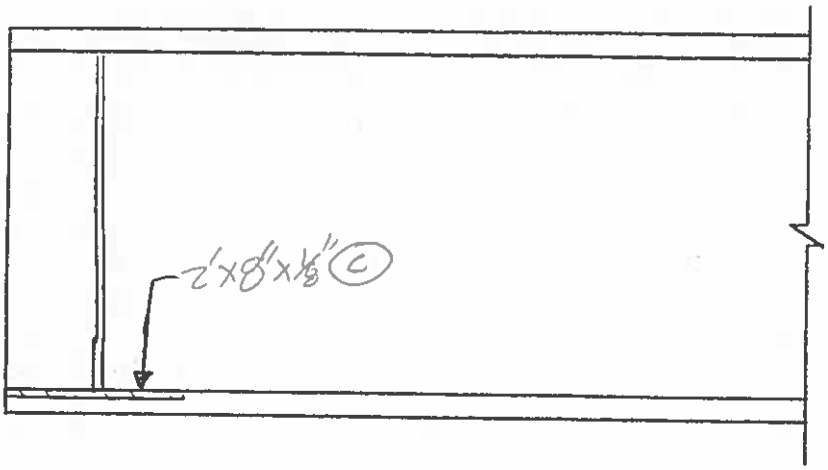

SPAN F, BEAM 9
EAST ELEV. AT P5

REVISION 1	DATE	CREW	COMPANY	REVISION 3	DATE	CREW	COMPANY
REVISION 2	DATE	CREW	COMPANY	REVISION 4	DATE	CREW	COMPANY

Dewberry
59 Elm Street, Suite 101
New Haven, CT 06510

FIELD NOTES	JOB NO.	BRIDGE NO: 03014 A
	DATE: 7/1/2014	SHEET OF
	CREW: RFP, PHH	

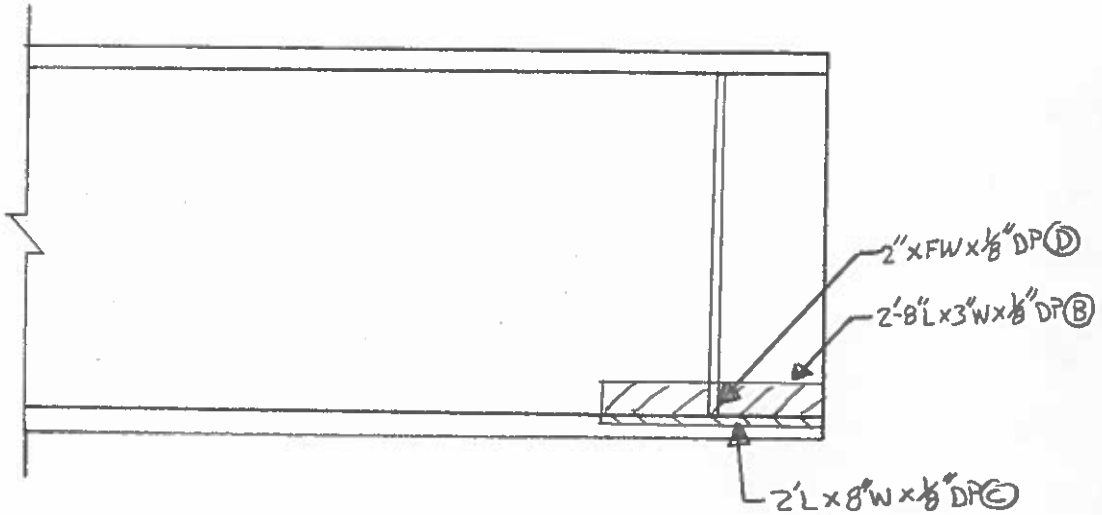

SPAN F, BEAM 10
WEST ELEV. AT P5

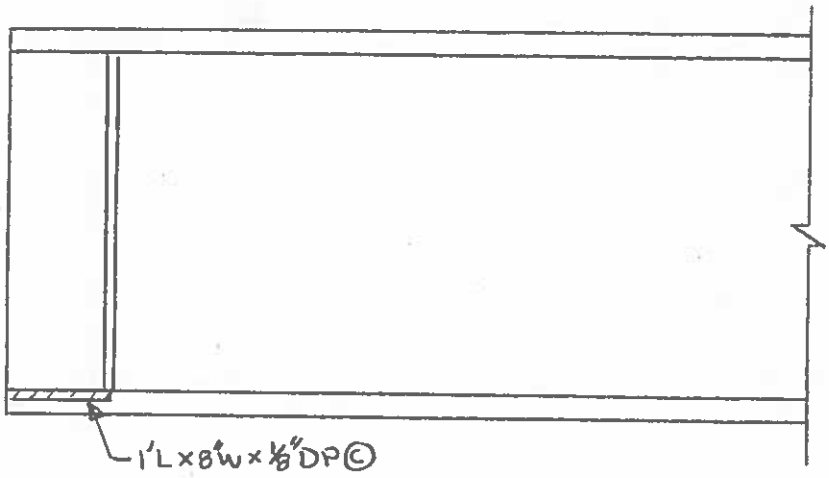

SPAN F, BEAM 10
EAST ELEV. AT P5

REVISION	DATE	CREW	COMPANY	REVISION	DATE	CREW	COMPANY
1				3			
2				4			

Dewberry
59 Elm Street, Suite 101
New Haven, CT 06510

FIELD NOTES

JOB NO.

BRIDGE NO: 03014A

DATE: 7/1/2014

SHEET OF

CREW: RFP, PHH

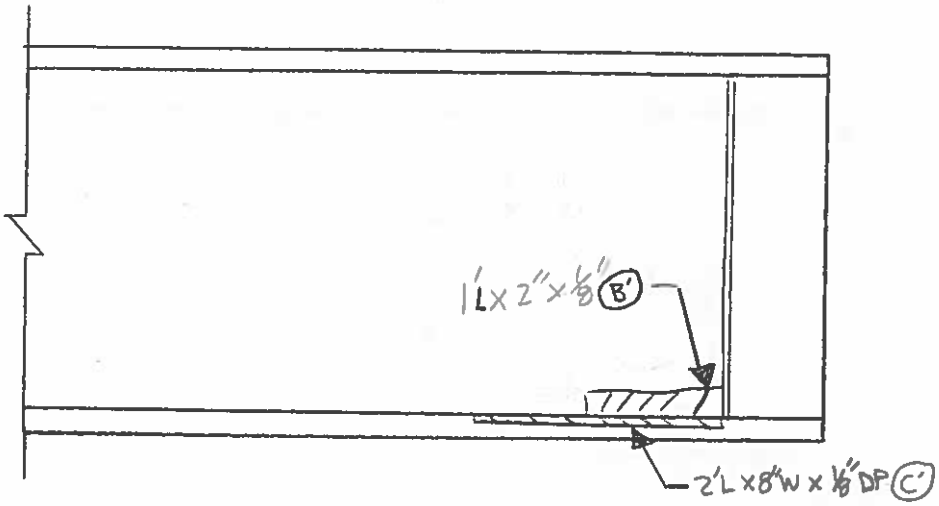

SPAN F, BEAM 11
WEST ELEV. AT P5

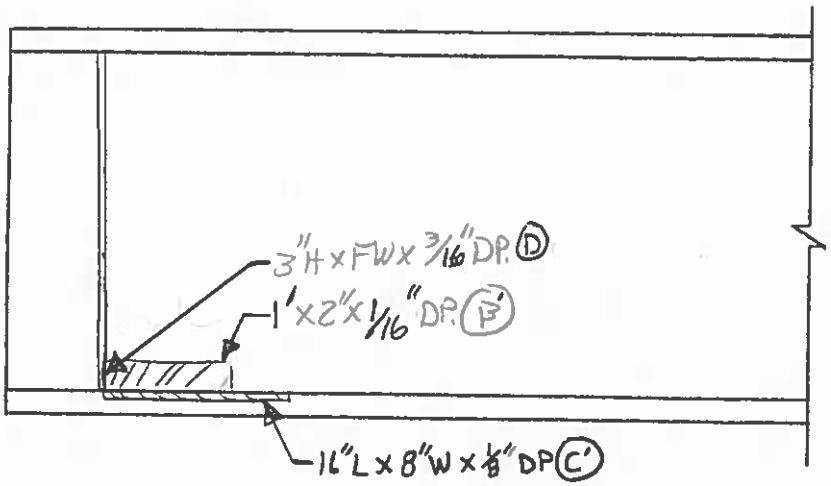

SPAN F, BEAM 11
EAST ELEV. AT P5

REVISION	DATE	CREW	COMPANY	REVISION	DATE	CREW	COMPANY
1				3			
2				4			

Dewberry
59 Elm Street, Suite 101
New Haven, CT 06510

FIELD NOTES

JOB NO.

BRIDGE NO: 03014A

DATE: 7/1/2014

SHEET OF

CREW: RFP, PHH

- TOP OF WEB TIPPED 1/4" EAST OVER 2'

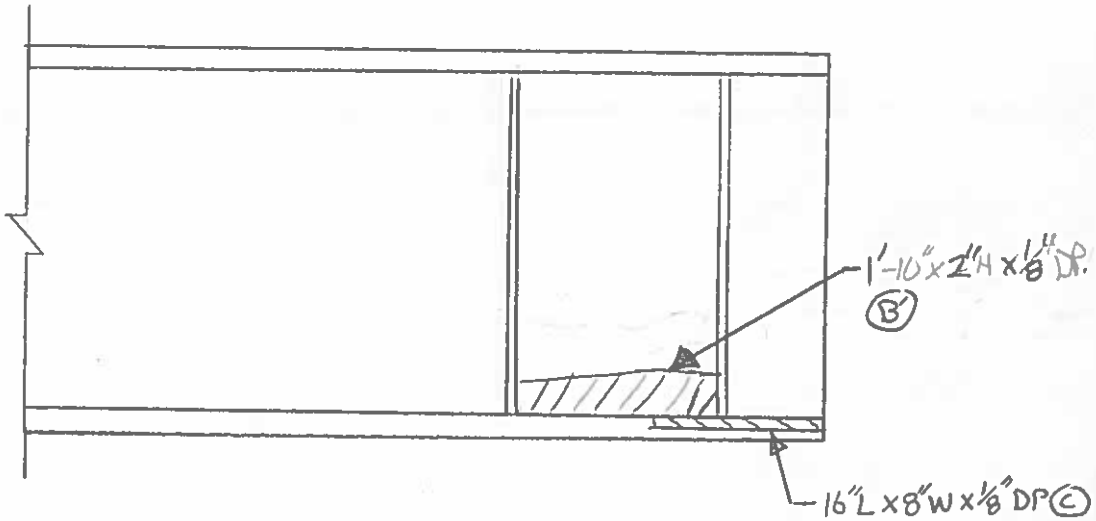

SPAN F, BEAM 12
WEST ELEV. AT P5

- NO SECTION LOSS

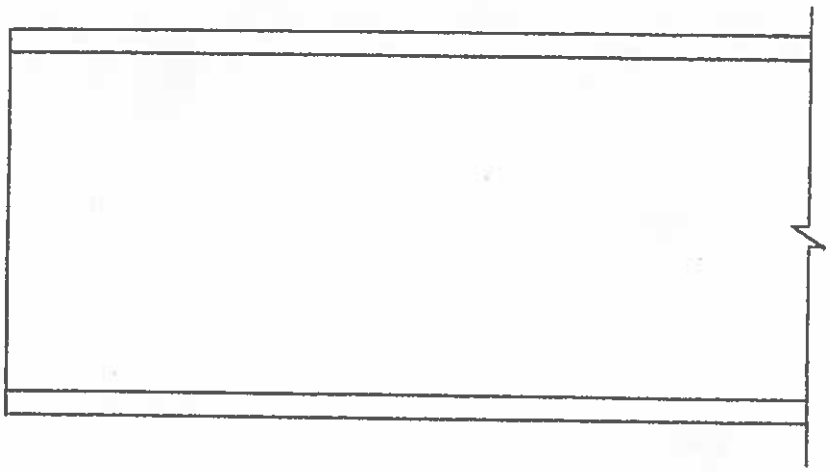

SPAN F, BEAM 12
EAST ELEV. AT P5

REVISION	DATE	CREW	COMPANY	REVISION	DATE	CREW	COMPANY
1				3			
2				4			

Dewberry
59 Elm Street, Suite 101
New Haven, CT 06510

FIELD NOTES

JOB NO.

BRIDGE NO: 03014A

DATE: 7/9/2014

SHEET OF

CREW: RFP, PHH

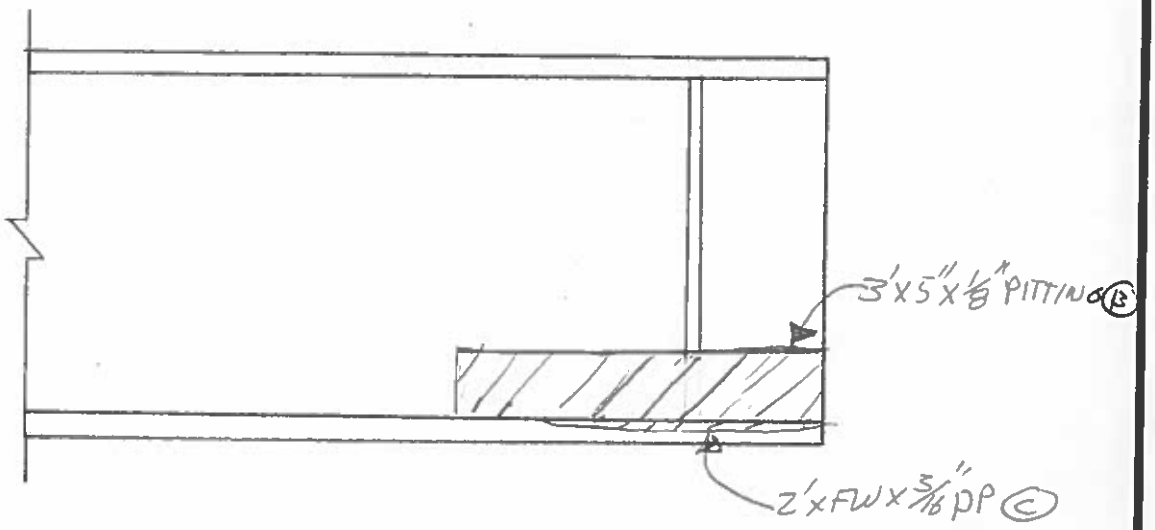

SPAN F, BEAM 1
EAST ELEV. AT P6

• WEB BOWED 1/8" WEST OVER F.H.

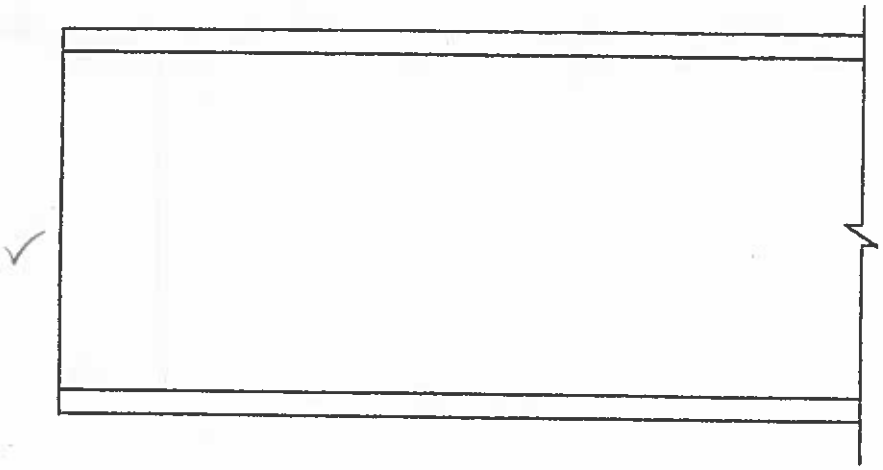

SPAN F, BEAM 1
WEST ELEV. AT P6

REVISION	DATE	CREW	COMPANY	REVISION	DATE	CREW	COMPANY
1				3			
2				4			

Dewberry
59 Elm Street, Suite 101
New Haven, CT 06510

FIELD NOTES

JOB NO.

BRIDGE NO: 03014 A

DATE: 7/9/2014

SHEET OF

CREW: RFP, PHH

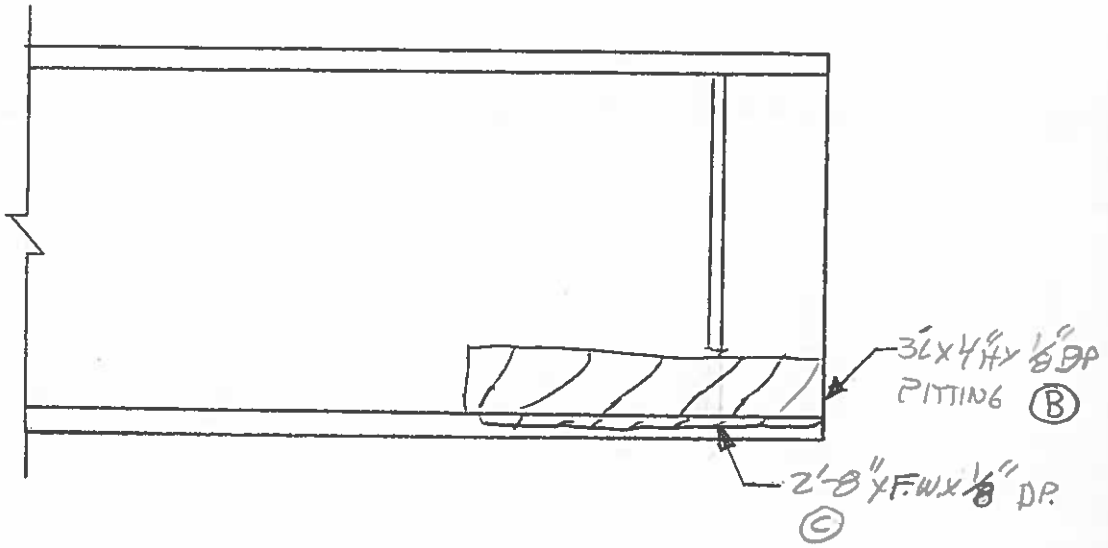

SPAN F, BEAM 2
EAST ELEV. AT P6

- TOP OF WEB TIPPED ⅛" EAST.

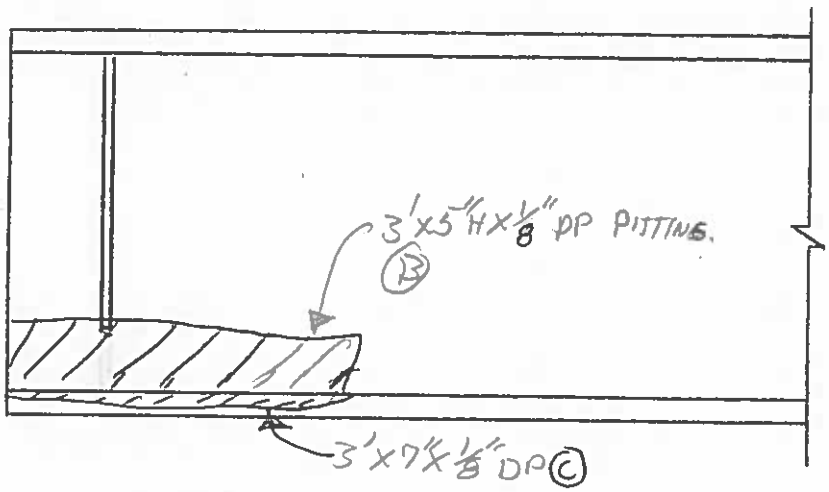

SPAN F, BEAM 2
WEST ELEV. AT P6

REVISION	DATE	CREW	COMPANY	REVISION	DATE	CREW	COMPANY
1				3			
2				4			

Dewberry
59 Elm Street, Suite 101
New Haven, CT 06510

FIELD NOTES

JOB NO.

BRIDGE NO: 03014 A

DATE: 9/9/2014

SHEET OF

CREW: RFP, PHH

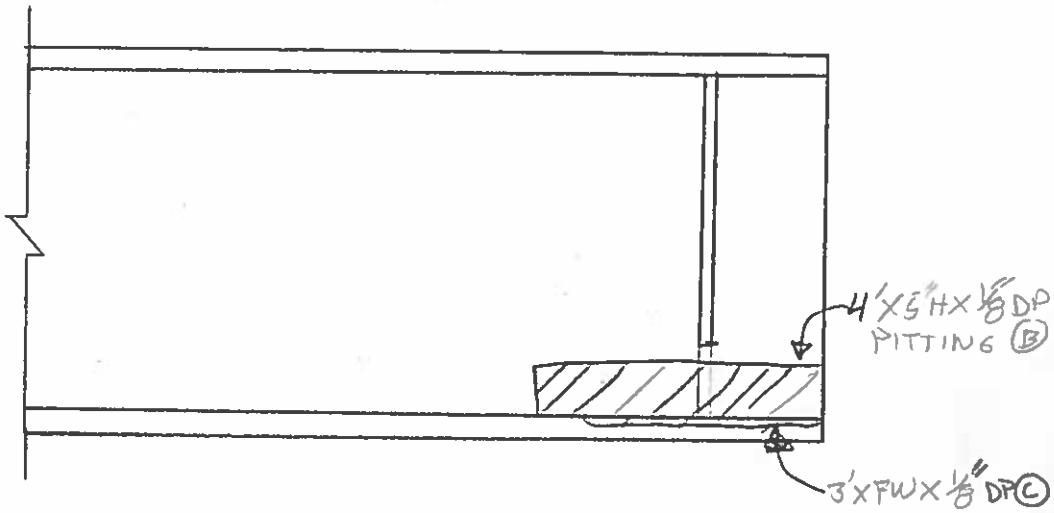

SPAN F, BEAM 3
EAST ELEV. AT P6

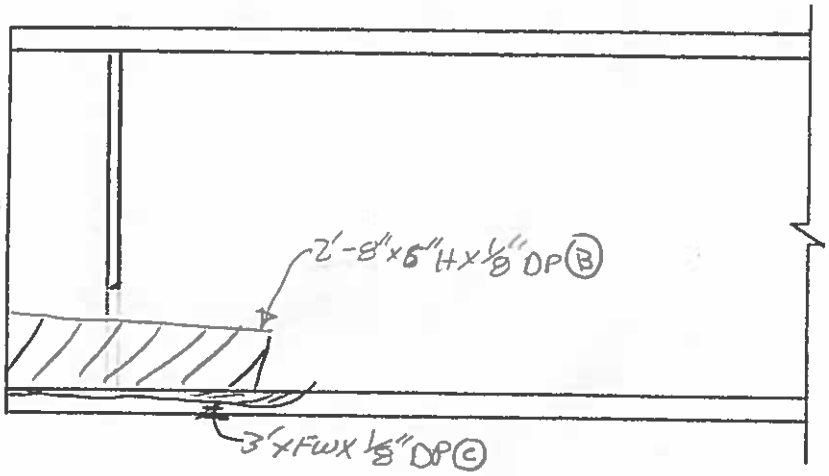

SPAN F, BEAM 3
WEST ELEV. AT P6

REVISION	DATE	CREW	COMPANY	REVISION	DATE	CREW	COMPANY
1				3			
2				4			

Dewberry
59 Elm Street, Suite 101
New Haven, CT 06510

FIELD NOTES

JOB NO.

BRIDGE NO: 03014 A

DATE: 7/9/2014

SHEET OF

CREW: RFP, PHH

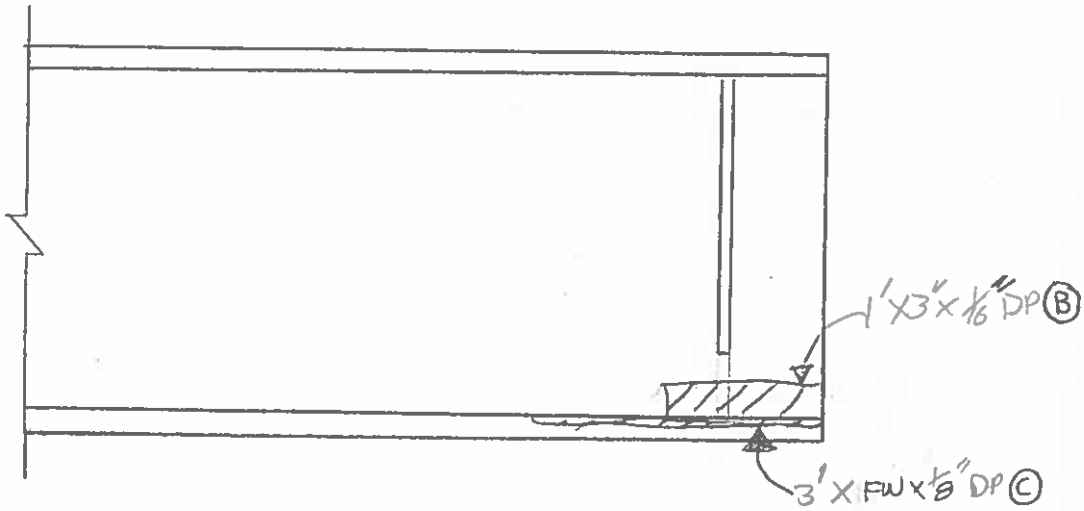

SPAN F, BEAM 4
EAST ELEV. AT P6

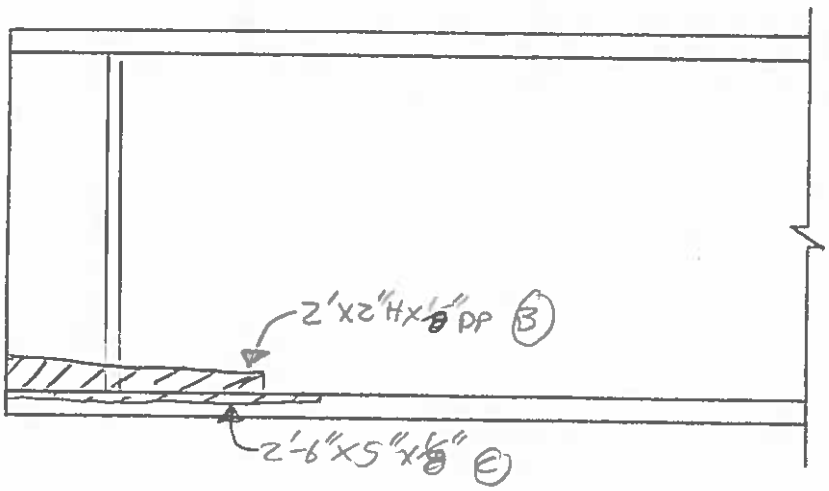

SPAN F, BEAM 4
WEST ELEV. AT P6

REVISION	DATE	CREW	COMPANY	REVISION	DATE	CREW	COMPANY
1				3			
2				4			

Dewberry	FIELD NOTES	JOB NO.	BRIDGE NO: 03014A
59 Elm Street, Suite 101 New Haven, CT 06510		DATE: 7/9/2014	SHEET OF
		CREW: RFP, PHH	

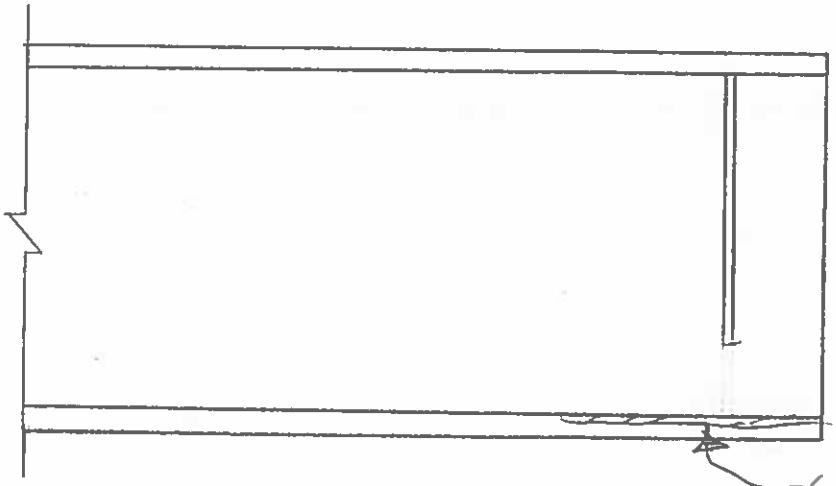

SPAN F, BEAM 5
EAST ELEV. AT P6

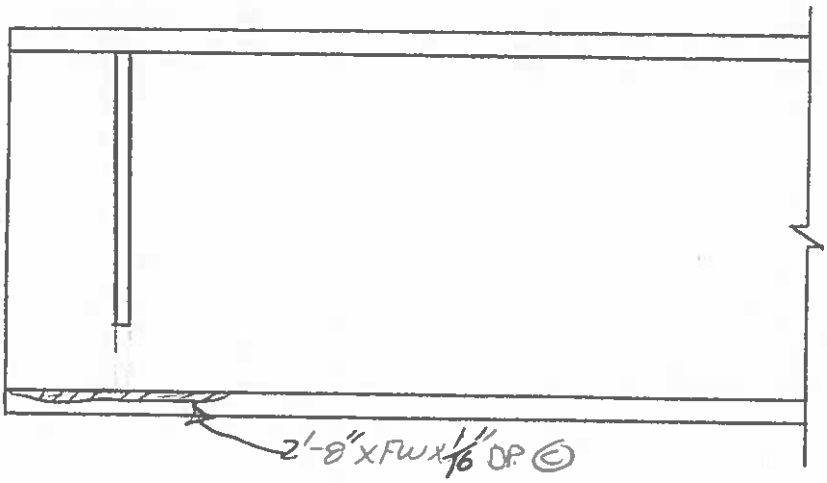

SPAN F, BEAM 5
WEST ELEV. AT P6

REVISION	DATE	CREW	COMPANY	REVISION	DATE	CREW	COMPANY
1				3			
2				4			

Dewberry
59 Elm Street, Suite 101
New Haven, CT 06510

FIELD NOTES	JOB NO.	BRIDGE NO: 03014 A
	DATE: 7/9/2014	SHEET OF
	CREW: RFP, PHH	

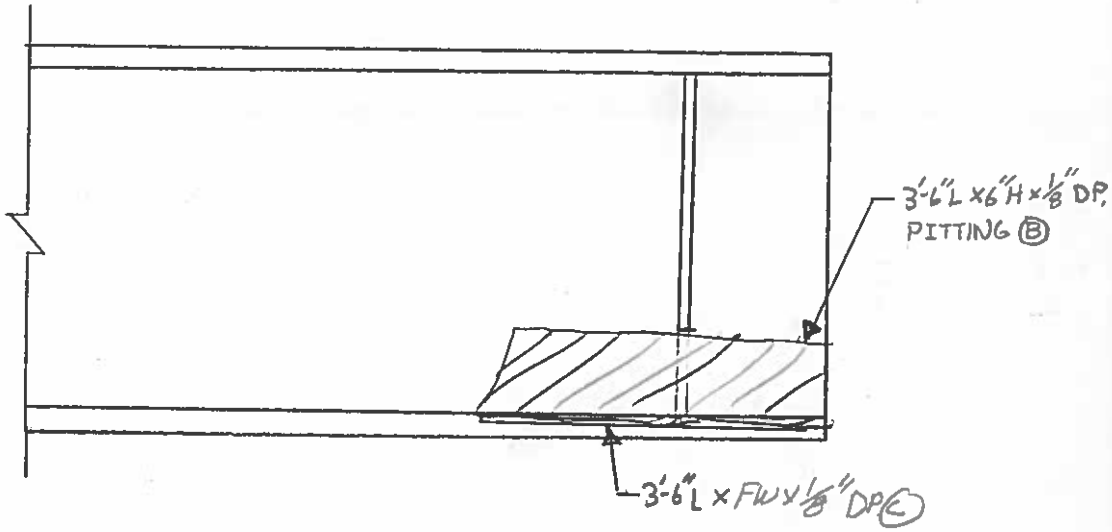

SPAN F, BEAM 6
EAST ELEV. AT P6

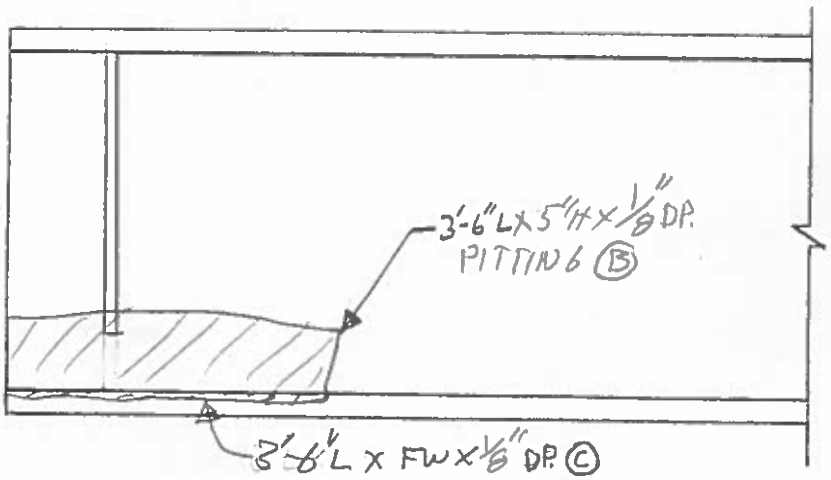

SPAN F, BEAM 6
WEST ELEV. AT P6

REVISION 1	DATE	CREW	COMPANY	REVISION 3	DATE	CREW	COMPANY
REVISION 2	DATE	CREW	COMPANY	REVISION 4	DATE	CREW	COMPANY

Dewberry	FIELD NOTES	JOB NO.	BRIDGE NO: 03014 A
59 Elm Street, Suite 101 New Haven, CT 06510		DATE: 7/1/2014	SHEET OF
		CREW: RFP, PHH	

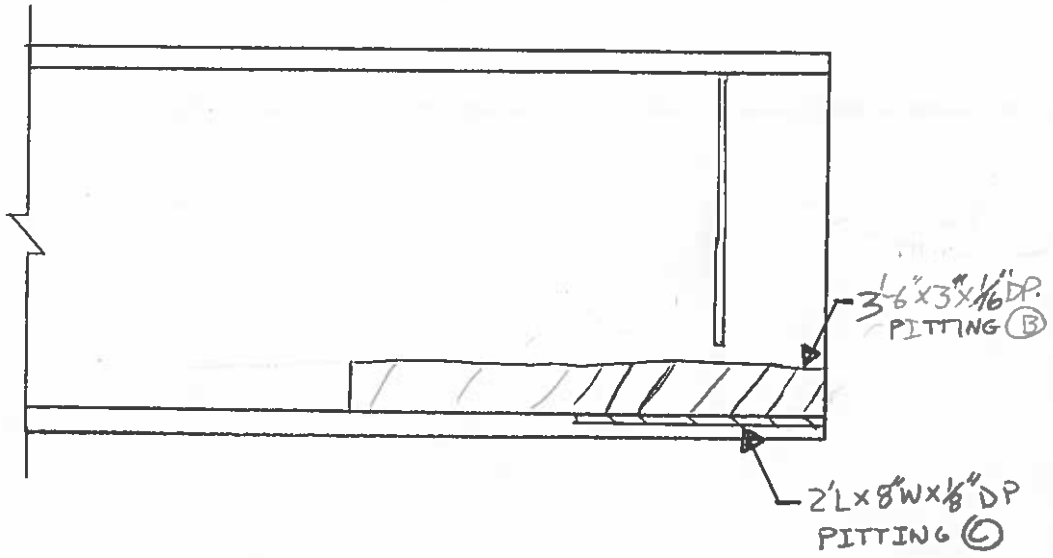

SPAN F, BEAM 7
EAST ELEV. AT P6

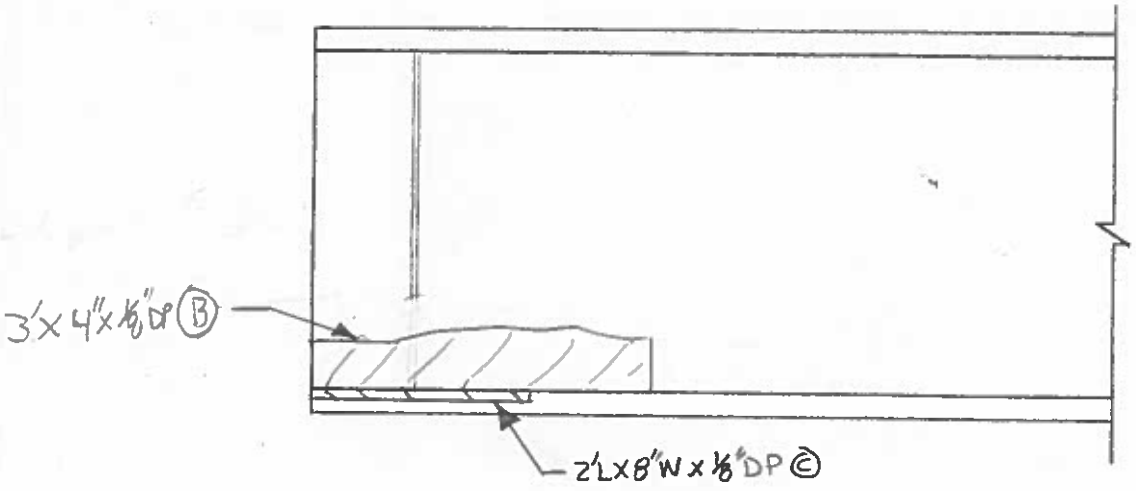

SPAN F, BEAM 7
WEST ELEV. AT P6

REVISION	DATE	CREW	COMPANY	REVISION	DATE	CREW	COMPANY
1				3			
2				4			

Dewberry® 59 Elm Street, Suite 101 New Haven, CT 06510	FIELD NOTES	JOB NO.	BRIDGE NO: 03014 A
		DATE: 7/1/2014	SHEET OF
		CREW: RFP, PHH	

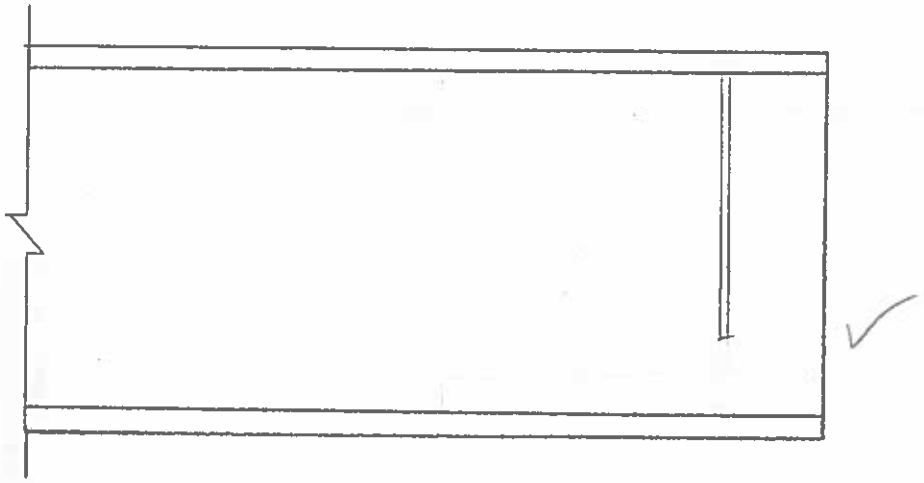

SPAN F, BEAM 8
EAST ELEV. AT P6

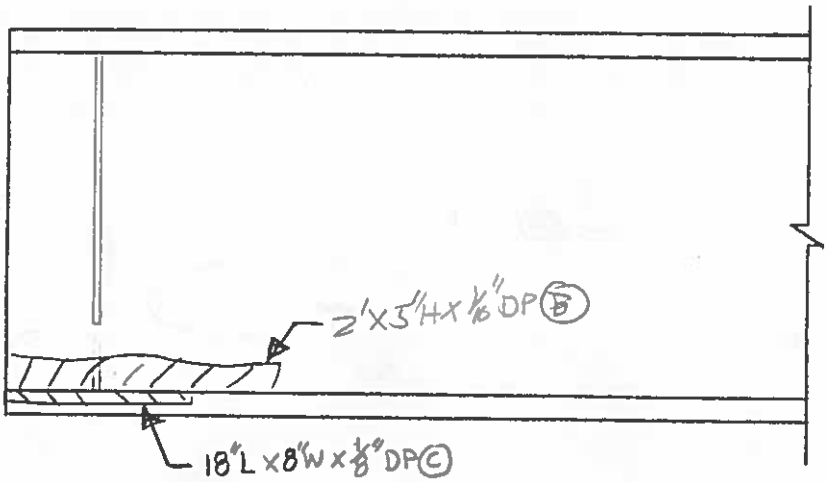

SPAN F, BEAM 8
WEST ELEV. AT P6

REVISION 1	DATE	CREW	COMPANY	REVISION 3	DATE	CREW	COMPANY
REVISION 2	DATE	CREW	COMPANY	REVISION 4	DATE	CREW	COMPANY

Dewberry	FIELD NOTES	JOB NO.	BRIDGE NO: 03014 A
59 Elm Street, Suite 101 New Haven, CT 06510		DATE: 7/1/2014	SHEET OF
		CREW: RFP, PHH	

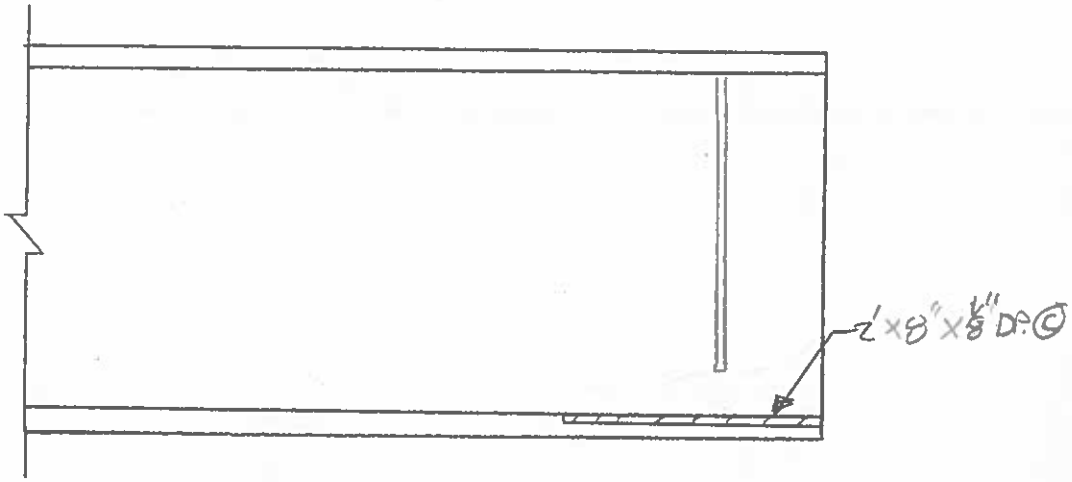

SPAN F, BEAM 9
EAST ELEV. AT P6

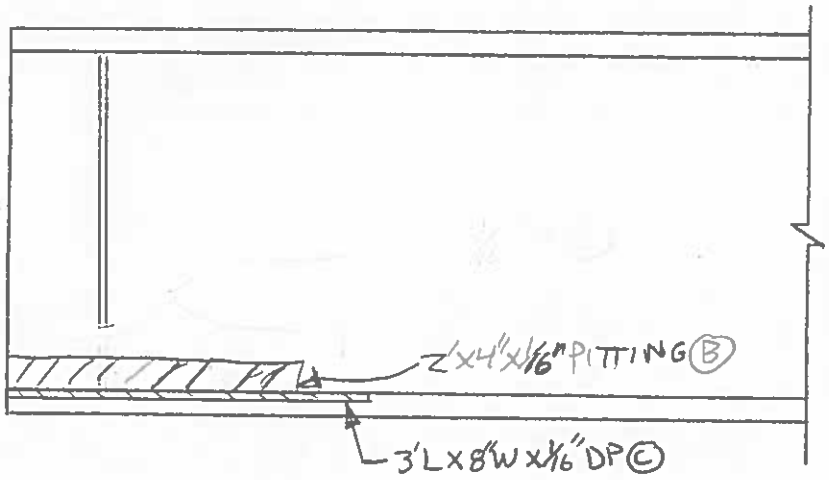

SPAN F, BEAM 9
WEST ELEV. AT P6

REVISION 1	DATE	CREW	COMPANY	REVISION 3	DATE	CREW	COMPANY
REVISION 2	DATE	CREW	COMPANY	REVISION 4	DATE	CREW	COMPANY

Dewberry
59 Elm Street, Suite 101
New Haven, CT 06510

FIELD NOTES

JOB NO.

BRIDGE NO: 03014 A

DATE: 7/1/2014

SHEET OF

CREW: RFP, PHH

- TOP OF WEB TIPPED EAST 1/8" OVER 2'

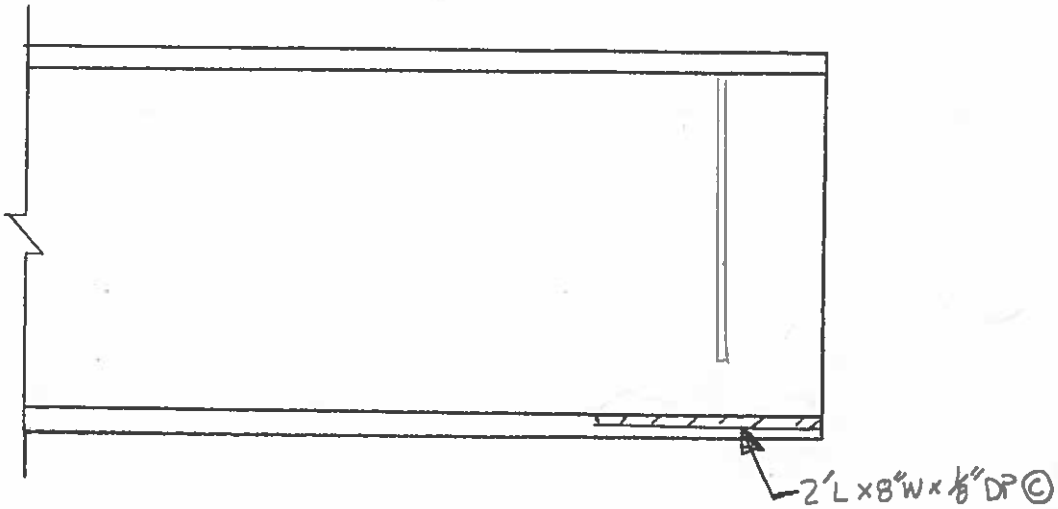

SPAN F, BEAM 10
EAST ELEV. AT P6

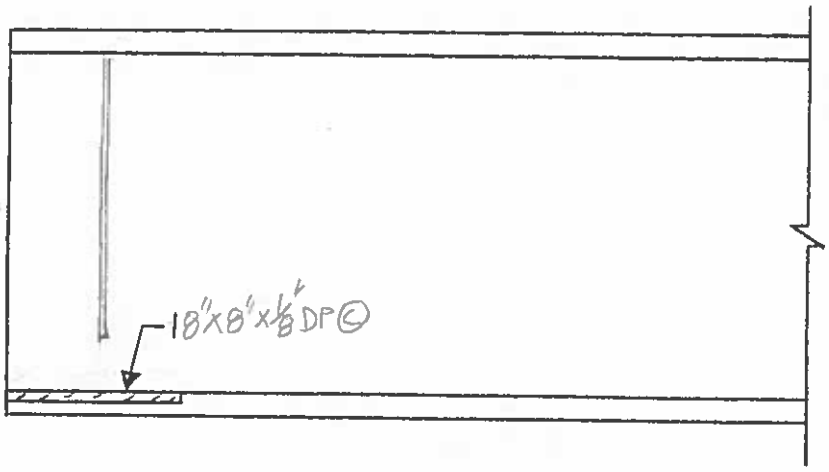

SPAN F, BEAM 10
WEST ELEV. AT P6

REVISION	DATE	CREW	COMPANY	REVISION	DATE	CREW	COMPANY
1				3			
2				4			

Dewberry
59 Elm Street, Suite 101
New Haven, CT 06510

FIELD NOTES

JOB NO.

BRIDGE NO: 03014A

DATE: 7/1/2014

SHEET OF

CREW: RFP, PHH

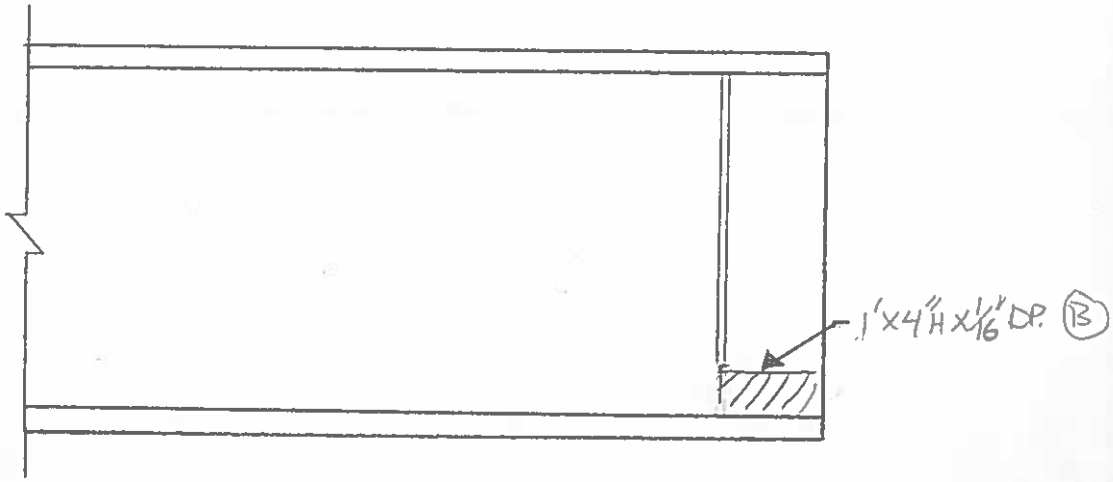

SPAN F, BEAM 11
EAST ELEV. AT P6

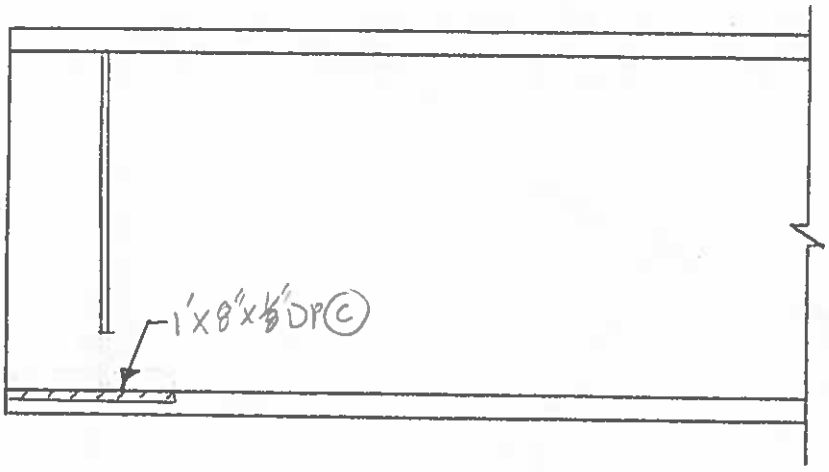

SPAN F, BEAM 11
WEST ELEV. AT P6

REVISION	DATE	CREW	COMPANY	REVISION	DATE	CREW	COMPANY
1				3			
2				4			

Dewberry
59 Elm Street, Suite 101
New Haven, CT 06510

FIELD NOTES

JOB NO.

BRIDGE NO: 03014A

DATE: 7/1/2014

SHEET OF

CREW: RFP, PHH

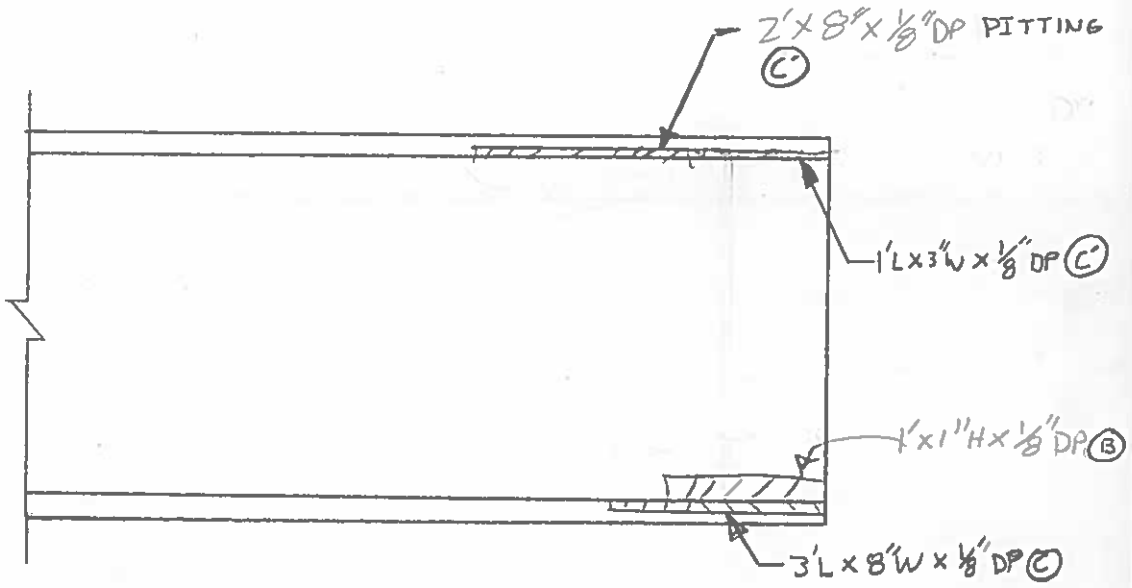

SPAN F, BEAM 12
EAST ELEV. AT P6

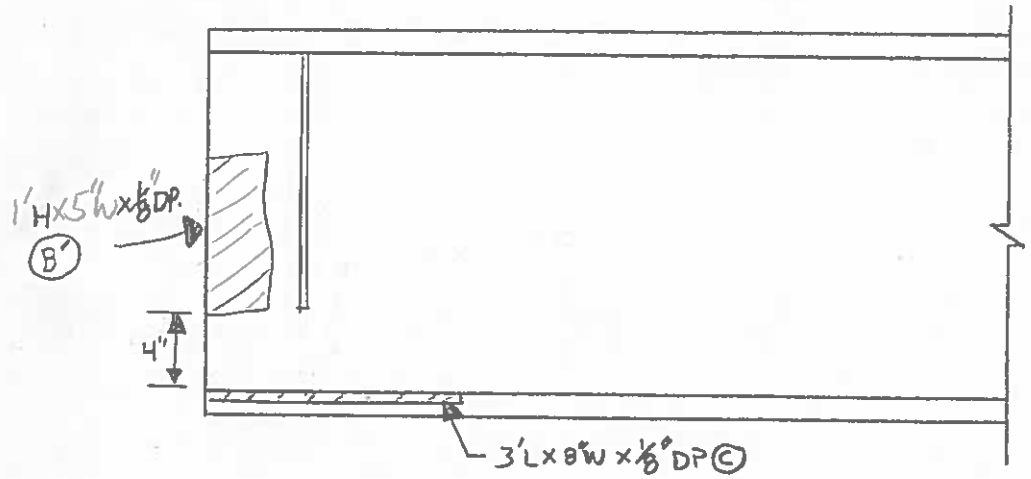

SPAN F, BEAM 12
WEST ELEV. AT P6

REVISION	DATE	CREW	COMPANY	REVISION	DATE	CREW	COMPANY
1				3			
2				4			

SPAN G

FIELD NOTES

PREPARED BY: Garg Consulting Services, Inc.

PROJ. NO. 170-3013

DATE: 11/08/2010

BRIDGE NO. 3014A

CREW: PDG, MD, SN, GF

SHEET 84 of 87

Revision	Date	Crew	Company
1	9/10/12	PKG, AKC	G112
2	7/2/14 & 7/9/14	RFP, PHH	DEW

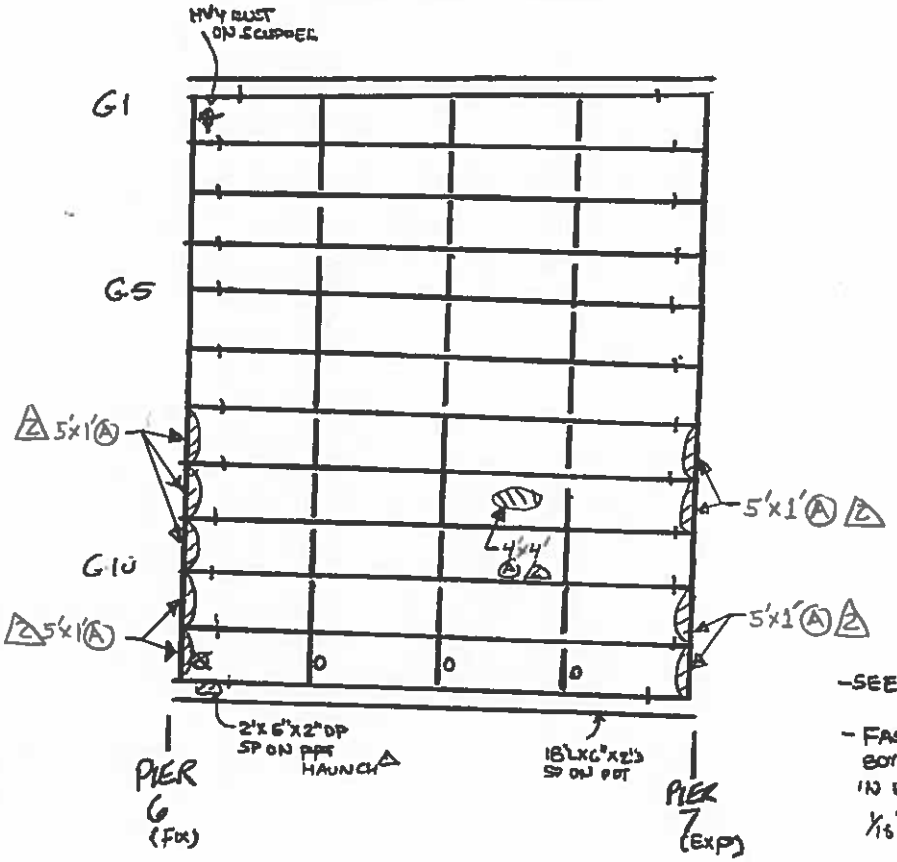

⊠ - SCUPPER PIPE
o - PVC WEEP
⊣⊢ - WELDED BF COVER PL. END CHECKED FOR MANDSON

LEGEND

- HOLLOW AREA
- SHALLOW REBAR
- SPALL AREA
- SPALL AREA WITH EXPOSED REBAR
- MAP CRACKS OR HAIRLINE MAP CRACKS
- HAIRLINE CRACKS (HLC) OR CRACKS (CR)
- HONEY COMB AREA
- SCALE AREA (HVY, MED, OR LT)

GENERAL NOTES

-SEE SPAN A GENERAL NOTES.

- FASCIA GIRDERS HAVE AREAS (UPTO BOT.) FEELING PRINT WITH PITTING IN RANDOM LOCATIONS W UP TO 1/16" DP PITTING @ GIRDER ENDS. 4

FRAMING PLAN SPAN G

2 SEE DETAIL SHEETS FOR MORE INFORMATION

Dewberry
59 Elm Street, Suite 101
New Haven, CT 06510

FIELD NOTES

JOB NO.

BRIDGE NO: 03014A

DATE: 7/9/14

SHEET OF

CREW: RFP, PHH

- WEB BOWED ⅛" WEST OVER FH
- NO SECTION LOSS

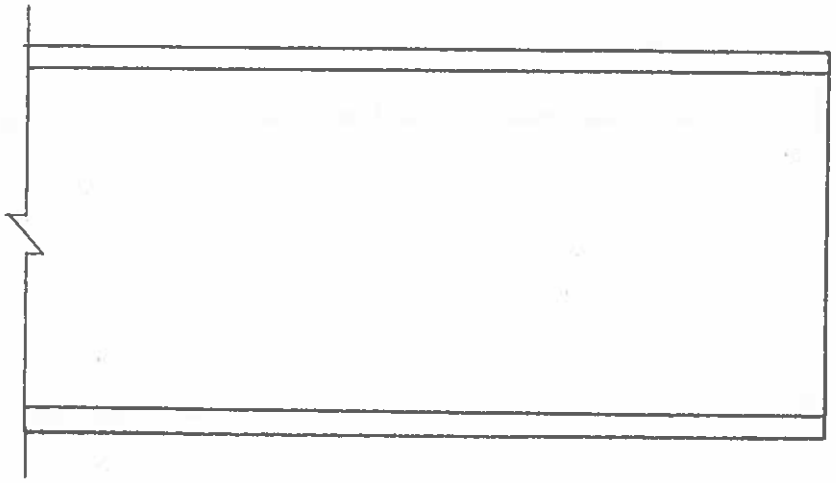

SPAN 6, BEAM 1
WEST ELEV. AT P6

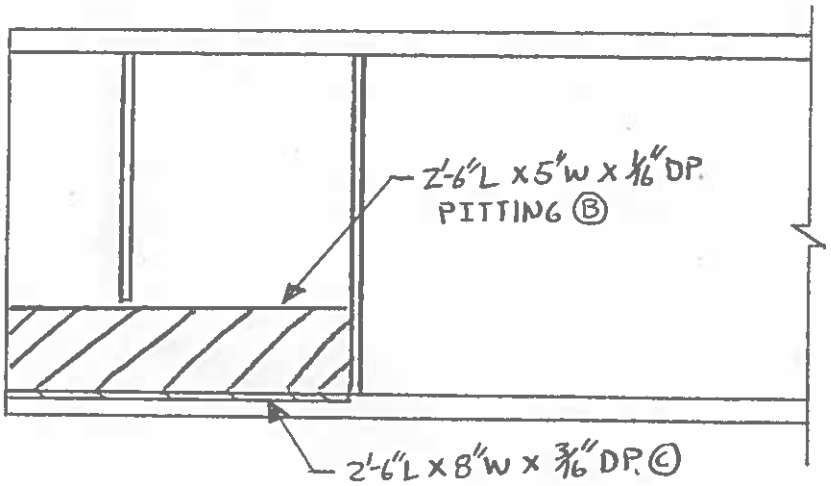

SPAN 6, BEAM 1
EAST ELEV. AT P6

REVISION	DATE	CREW	COMPANY	REVISION	DATE	CREW	COMPANY
1				3			
2				4			

Dewberry
59 Elm Street, Suite 101
New Haven, CT 06510

FIELD NOTES	JOB NO.	BRIDGE NO: 03014 A
	DATE: 7/9/14	SHEET OF
	CREW: RFP, PHH	

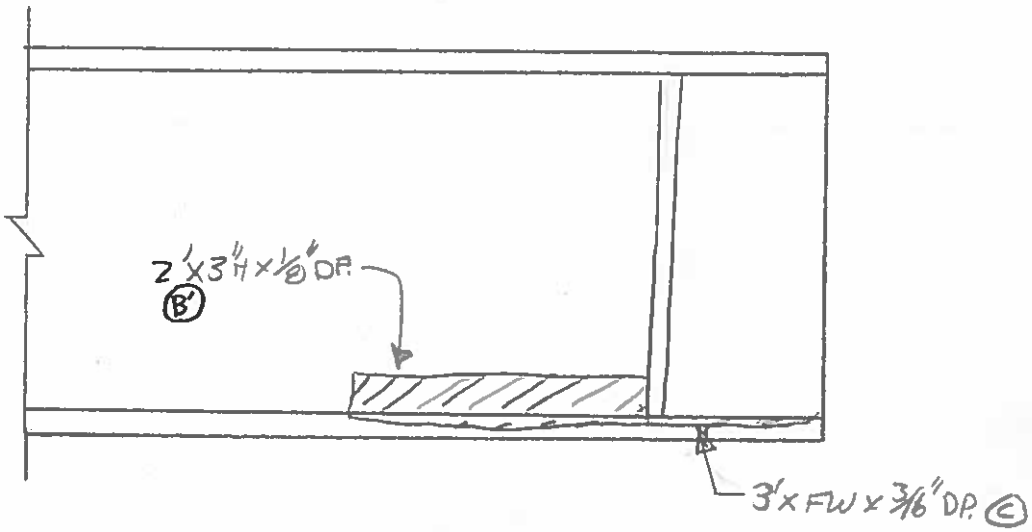

SPAN G, BEAM 2
WEST ELEV. AT P6

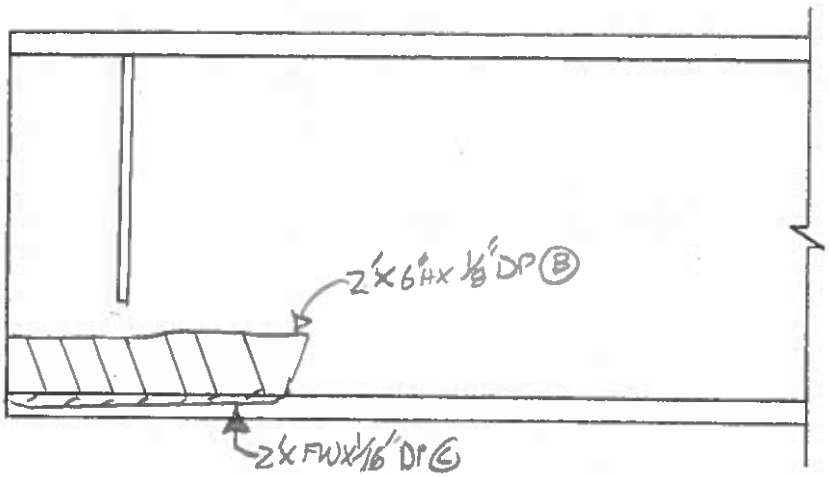

SPAN G, BEAM 2
EAST ELEV. AT P6

REVISION 1	DATE	CREW	COMPANY	REVISION 3	DATE	CREW	COMPANY
REVISION 2	DATE	CREW	COMPANY	REVISION 4	DATE	CREW	COMPANY

Dewberry
59 Elm Street, Suite 101
New Haven, CT 06510

FIELD NOTES	JOB NO.	BRIDGE NO: 03014 A
	DATE: 7/9/2014	SHEET OF
	CREW: RFP, PHH	

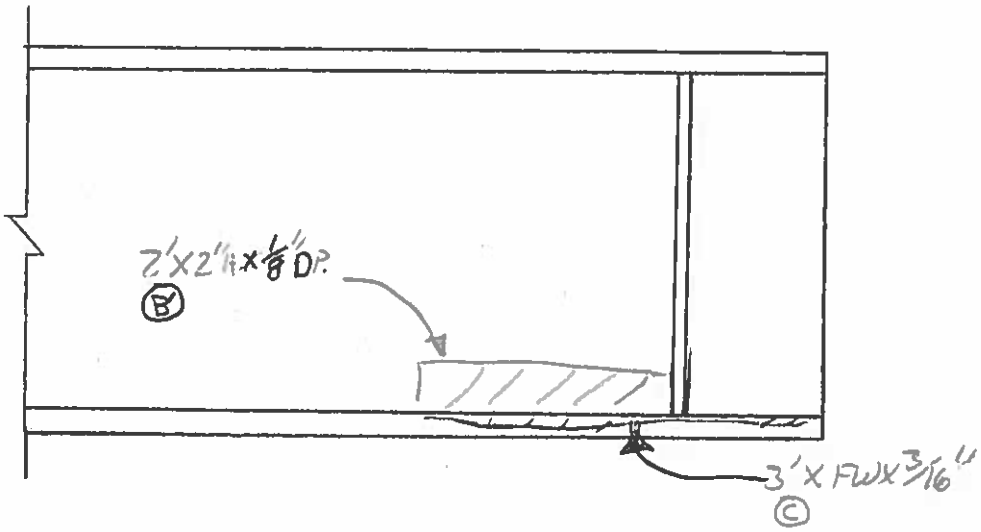

SPAN G, BEAM 3
WEST ELEV. AT P6

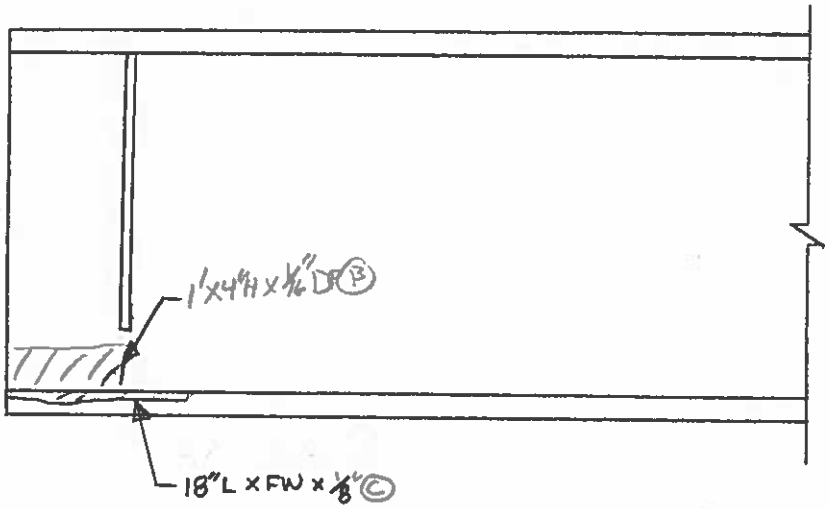

SPAN G, BEAM 3
EAST ELEV. AT P7

REVISION 1	DATE	CREW	COMPANY	REVISION 3	DATE	CREW	COMPANY
REVISION 2	DATE	CREW	COMPANY	REVISION 4	DATE	CREW	COMPANY

Dewberry
59 Elm Street, Suite 101
New Haven, CT 06510

FIELD NOTES	JOB NO.	BRIDGE NO: 03014 A
	DATE: 7/9/14	SHEET OF
	CREW: RFP, PHH	

- TOP OF WEB TIPPED 1/8" WEST OVER 2'

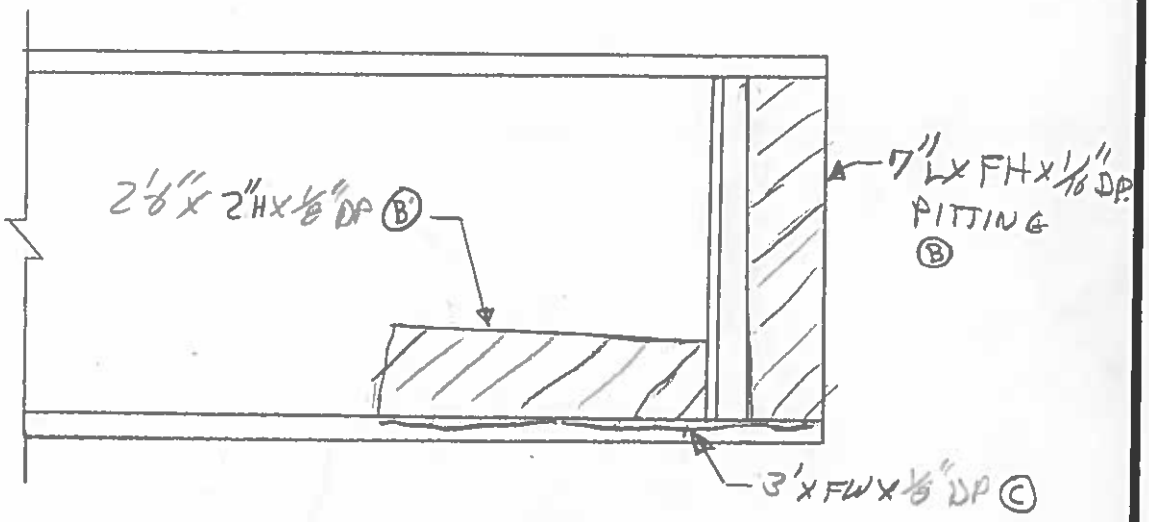

SPAN G, BEAM 4
WEST ELEV. AT P6

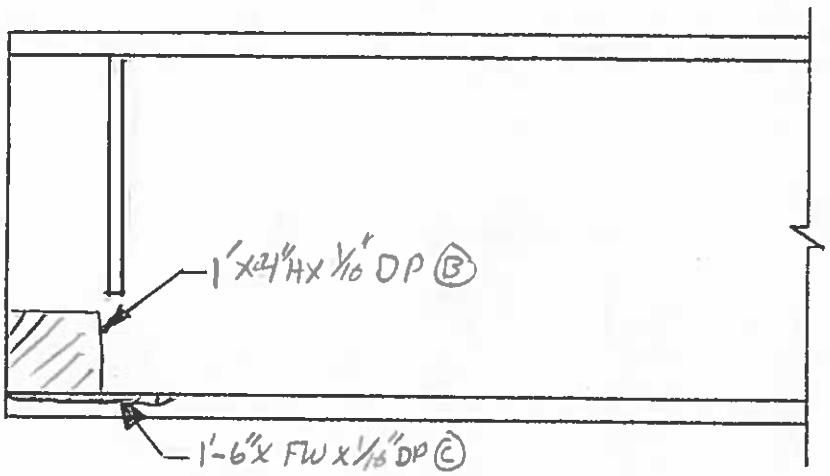

SPAN G, BEAM 4
EAST ELEV. AT P6

REVISION 1	DATE	CREW	COMPANY	REVISION 3	DATE	CREW	COMPANY
REVISION 2	DATE	CREW	COMPANY	REVISION 4	DATE	CREW	COMPANY

Dewberry® 59 Elm Street, Suite 101 New Haven, CT 06510	FIELD NOTES	JOB NO.	BRIDGE NO: 03014 A
		DATE: 7/9/14	SHEET OF
		CREW: RFP, PHH	

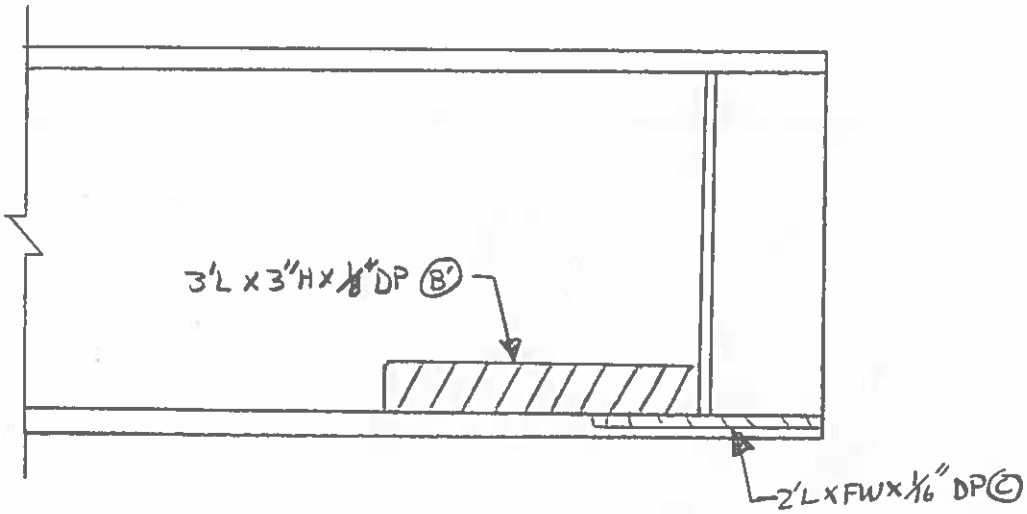

SPAN 6, BEAM 5
WEST ELEV. AT P6

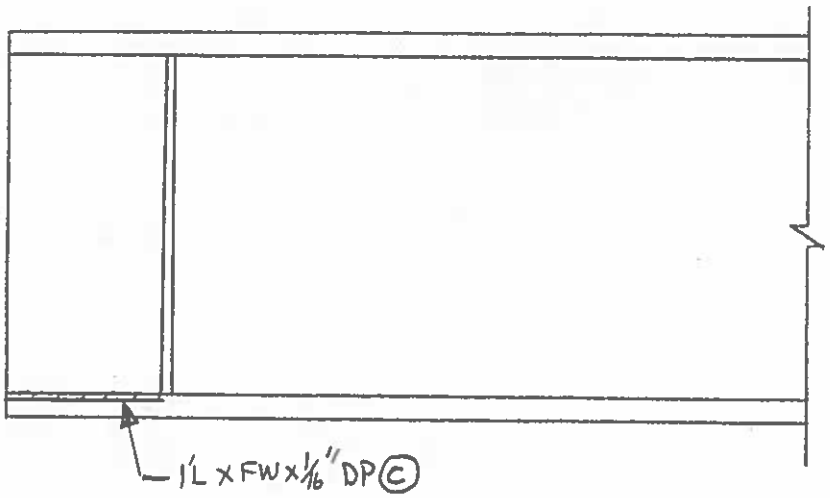

SPAN 6, BEAM 5
EAST ELEV. AT P6

REVISION 1	DATE	CREW	COMPANY	REVISION 3	DATE	CREW	COMPANY
REVISION 2	DATE	CREW	COMPANY	REVISION 4	DATE	CREW	COMPANY

Dewberry
59 Elm Street, Suite 101
New Haven, CT 06510

FIELD NOTES

JOB NO.

BRIDGE NO: 03014 A

DATE: 7/9/14

SHEET OF

CREW: RFP, PHH

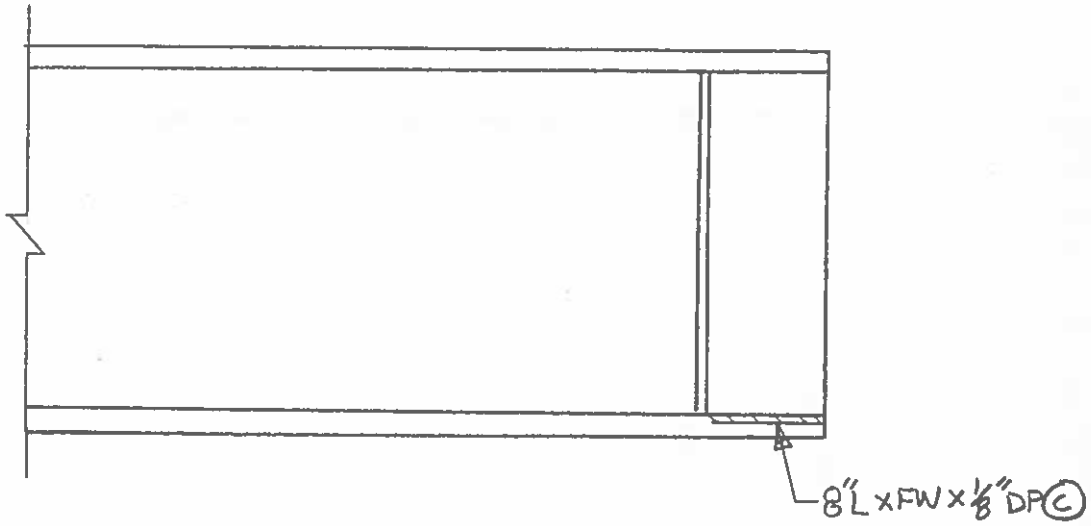

SPAN 6, BEAM 6
WEST ELEV. AT P6

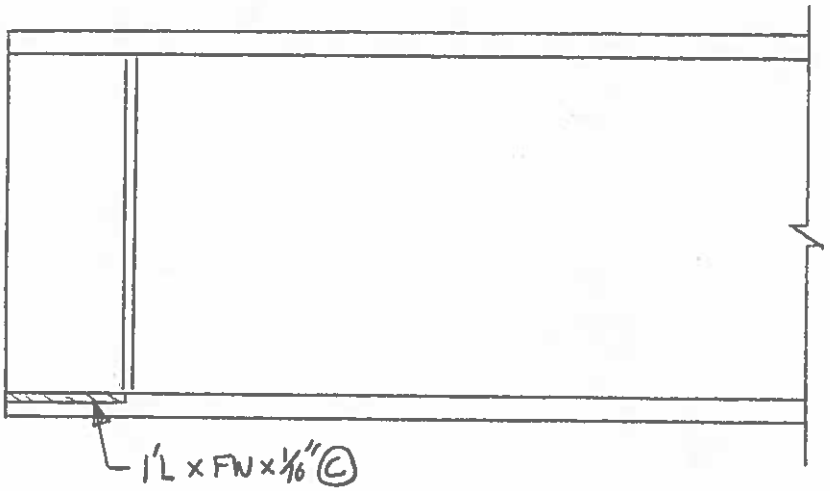

SPAN 6, BEAM 6
EAST ELEV. AT P6

REVISION	DATE	CREW	COMPANY	REVISION	DATE	CREW	COMPANY
1				3			
2				4			

Dewberry® 59 Elm Street, Suite 101 New Haven, CT 06510	FIELD NOTES	JOB NO.	BRIDGE NO: 03014 A
		DATE: 7/1/2014	SHEET OF
		CREW: RFP, PHH	

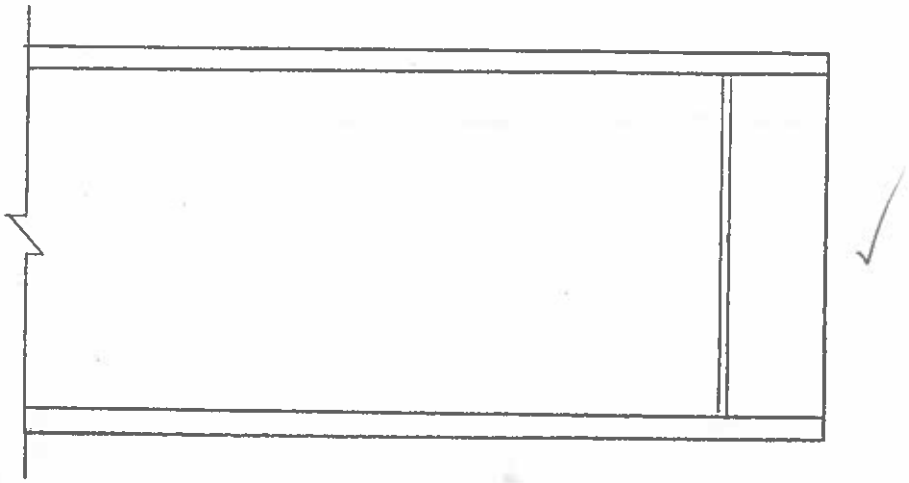

SPAN 6, BEAM 7
WEST ELEV. AT P6

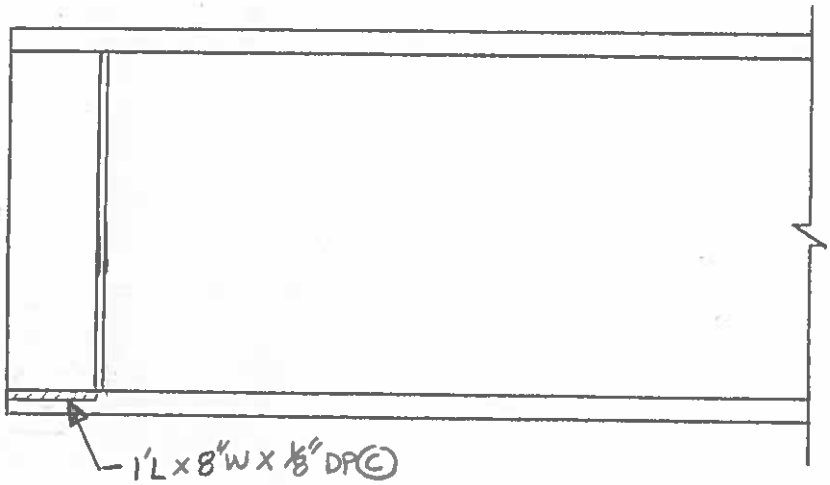

SPAN 6, BEAM 7
EAST ELEV. AT P6

REVISION 1	DATE	CREW	COMPANY	REVISION 3	DATE	CREW	COMPANY
REVISION 2	DATE	CREW	COMPANY	REVISION 4	DATE	CREW	COMPANY

Dewberry

59 Elm Street, Suite 101
New Haven, CT 06510

FIELD NOTES

JOB NO.

BRIDGE NO: 03014A

DATE: 7/1/2014

SHEET OF

CREW: RFP, PAH

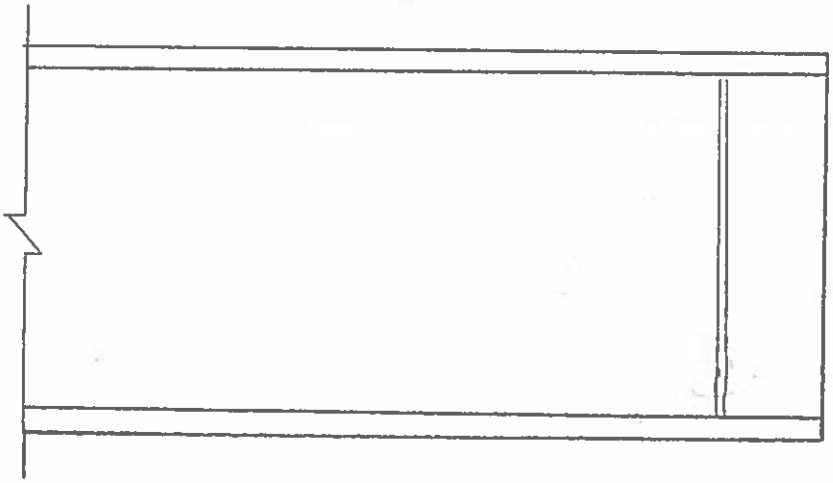

SPAN G, BEAM 8
WEST ELEV. AT P6

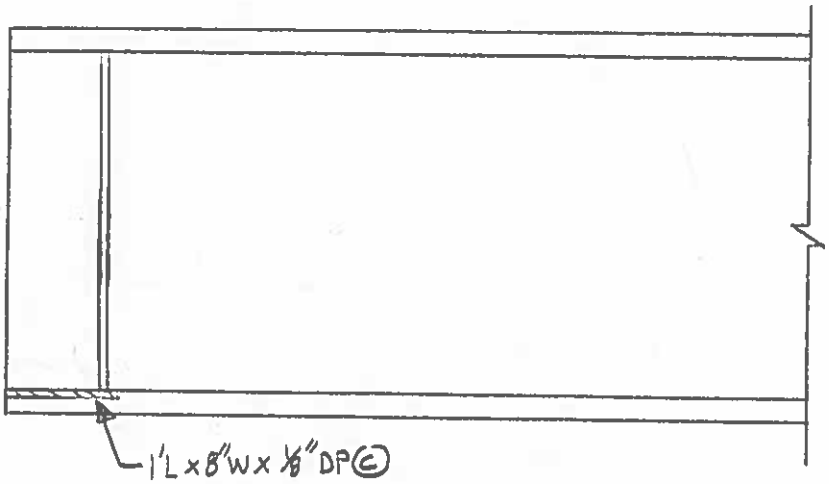

SPAN G, BEAM 8
EAST ELEV. AT P6

REVISION	DATE	CREW	COMPANY	REVISION	DATE	CREW	COMPANY
1				3			
2				4			

Dewberry
59 Elm Street, Suite 101
New Haven, CT 06510

FIELD NOTES	JOB NO.	BRIDGE NO: 03014 A
	DATE: 7/1/2014	SHEET OF
	CREW: RFP, PHH	

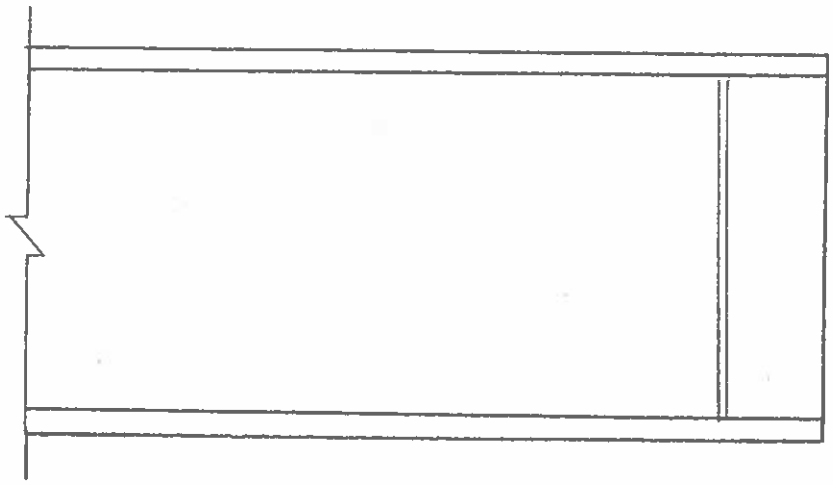

SPAN 6, BEAM 9
WEST ELEV. AT P6

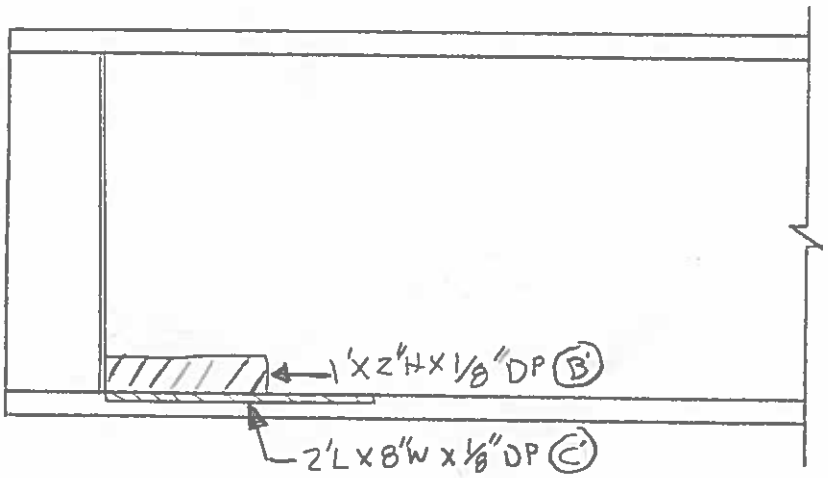

SPAN 6, BEAM 9
EAST ELEV. AT P6

REVISION 1	DATE	CREW	COMPANY	REVISION 3	DATE	CREW	COMPANY
REVISION 2	DATE	CREW	COMPANY	REVISION 4	DATE	CREW	COMPANY

Dewberry
59 Elm Street, Suite 101
New Haven, CT 06510

FIELD NOTES

JOB NO.

BRIDGE NO: 03014 A

DATE: 7/1/2014

SHEET OF

CREW: RFP, PHH

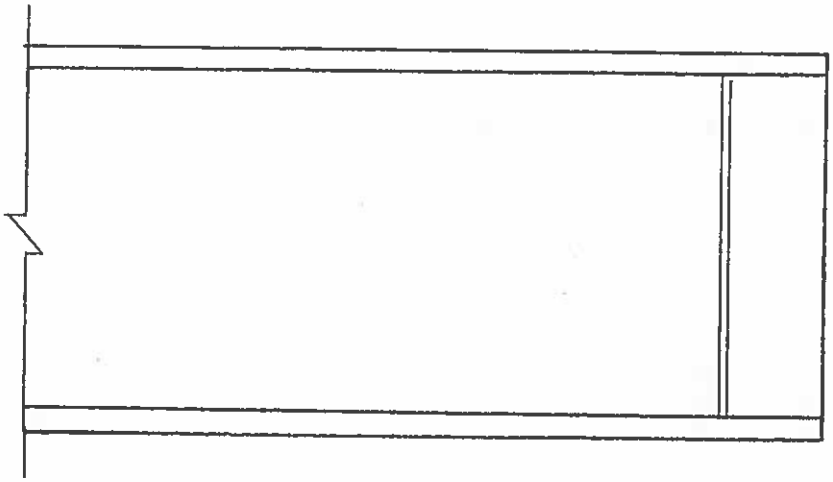

SPAN 6, BEAM 10
WEST ELEV. AT P6

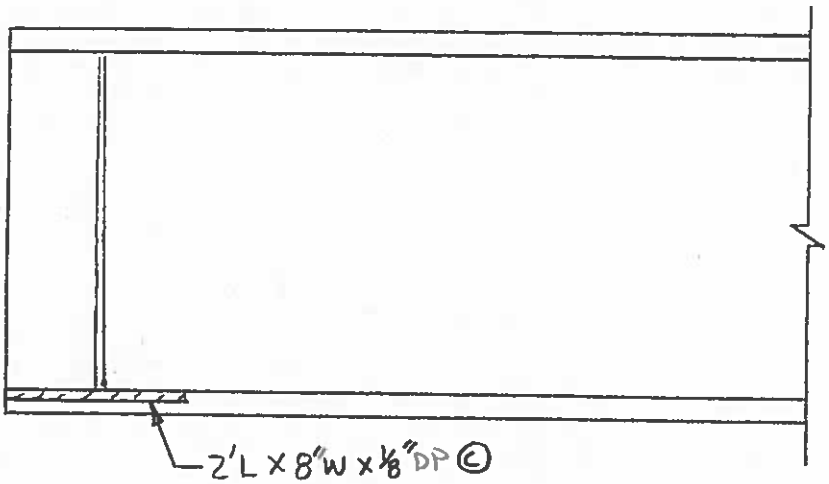

SPAN 6, BEAM 10
EAST ELEV. AT P6

REVISION	DATE	CREW	COMPANY	REVISION	DATE	CREW	COMPANY
1				3			
2				4			

Dewberry	FIELD NOTES	JOB NO.	BRIDGE NO: 03014 A
59 Elm Street, Suite 101 New Haven, CT 06510		DATE: 7/11/2014	SHEET OF
		CREW: RFP, PHH	

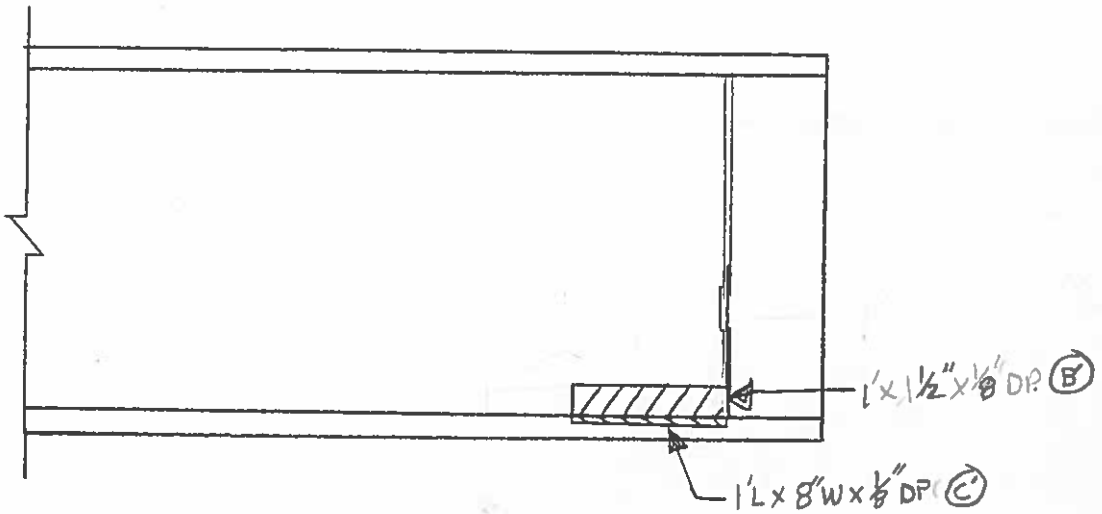

SPAN G, BEAM 11
WEST ELEV. AT P6

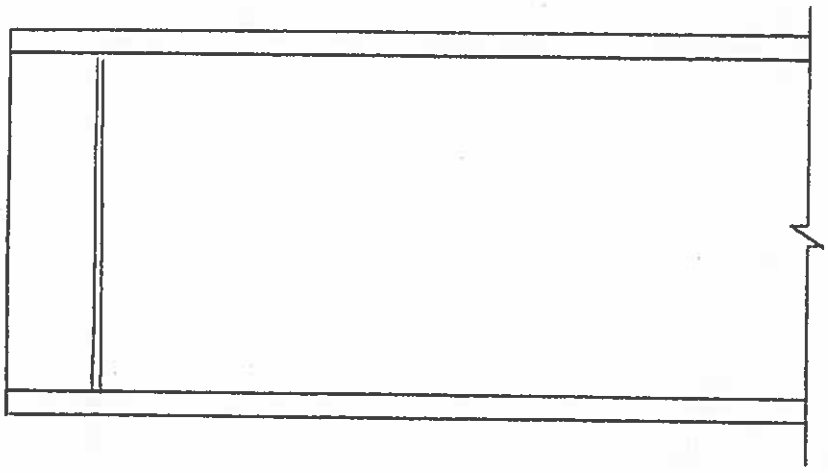

SPAN G, BEAM 11
EAST ELEV. AT P6

REVISION 1	DATE	CREW	COMPANY	REVISION 3	DATE	CREW	COMPANY
REVISION 2	DATE	CREW	COMPANY	REVISION 4	DATE	CREW	COMPANY

Dewberry
59 Elm Street, Suite 101
New Haven, CT 06510

FIELD NOTES

JOB NO.

BRIDGE NO: 03014 A

DATE: 7/1/2014

SHEET OF

CREW: RFP, PHH

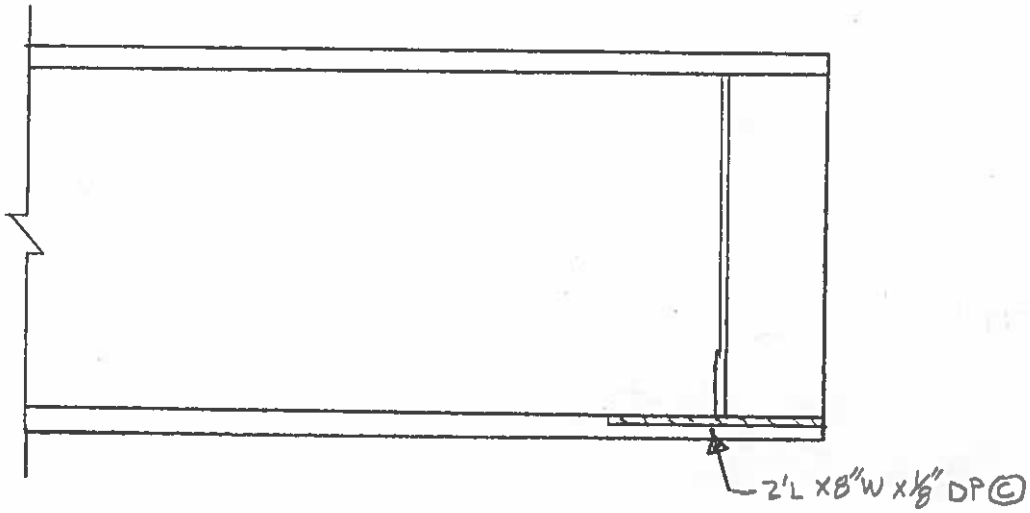

SPAN 6, BEAM 12
WEST ELEV. AT P6

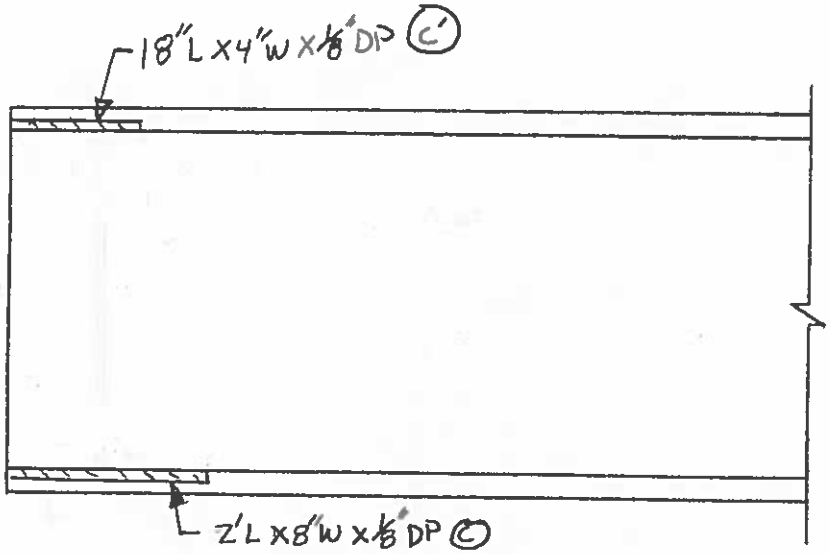

SPAN 6, BEAM 12
~~EAST~~ ELEV. AT P6

REVISION	DATE	CREW	COMPANY	REVISION	DATE	CREW	COMPANY
1				3			
2				4			

Dewberry
59 Elm Street, Suite 101
New Haven, CT 06510

FIELD NOTES

JOB NO.

BRIDGE NO: 03014 A

DATE: 7/9/2014

SHEET OF

CREW: RFP, PHH

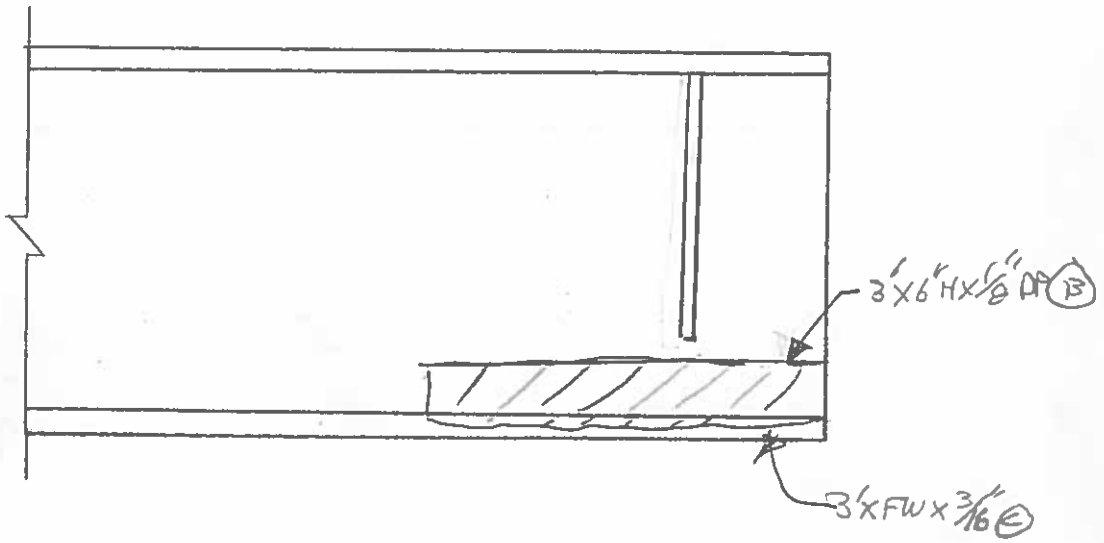

SPAN 6, BEAM 1
EAST ELEV. AT P7

- TOP OF WEB TIPPED EAST 1/8" OVER 2'
- NO SECTION LOSS

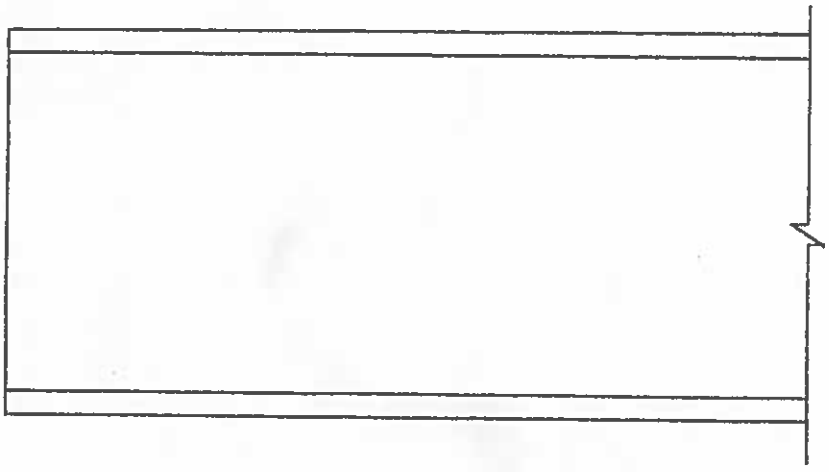

SPAN 6, BEAM 1
WEST ELEV. AT P7

REVISION 1	DATE	CREW	COMPANY	REVISION 3	DATE	CREW	COMPANY
REVISION 2	DATE	CREW	COMPANY	REVISION 4	DATE	CREW	COMPANY

Dewberry
59 Elm Street, Suite 101
New Haven, CT 06510

FIELD NOTES	JOB NO.	BRIDGE NO: 03014 A
	DATE: 7/9/14	SHEET OF
	CREW: RFP, PHH	

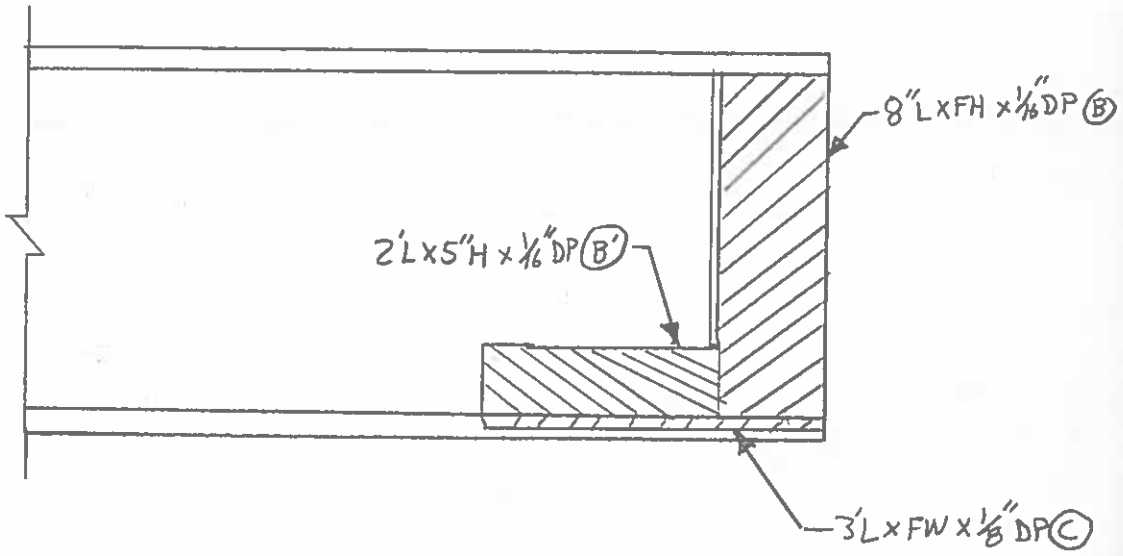

SPAN 6, BEAM 2
EAST ELEV. AT P7

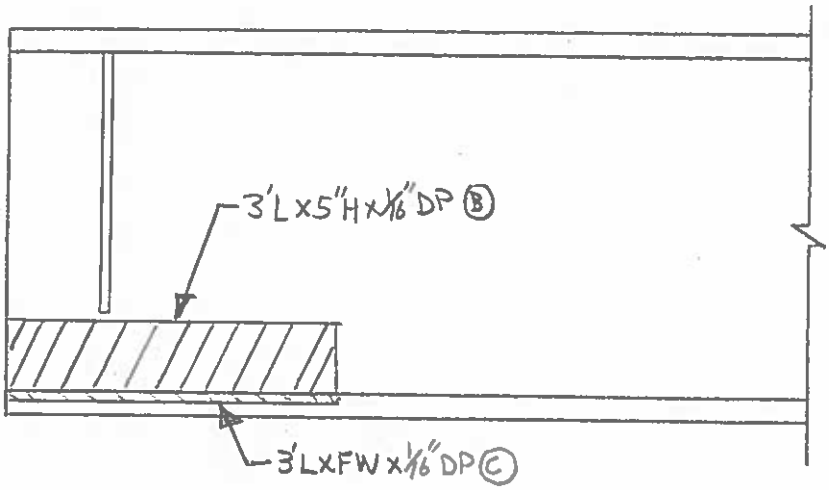

SPAN 6, BEAM 2
WEST ELEV. AT P7

REVISION 1	DATE	CREW	COMPANY	REVISION 3	DATE	CREW	COMPANY
REVISION 2	DATE	CREW	COMPANY	REVISION 4	DATE	CREW	COMPANY

Dewberry	FIELD NOTES	JOB NO.	BRIDGE NO: 03014 A
59 Elm Street, Suite 101 New Haven, CT 06510		DATE: 7/9/2014	SHEET OF
		CREW: RFP, PHH	

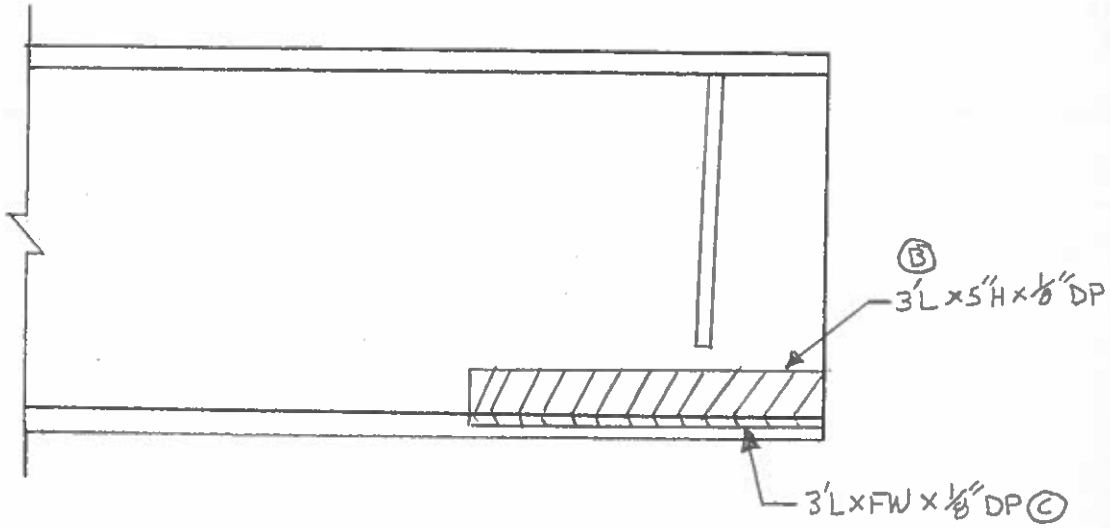

SPAN 6, BEAM 3
EAST ELEV. AT P7

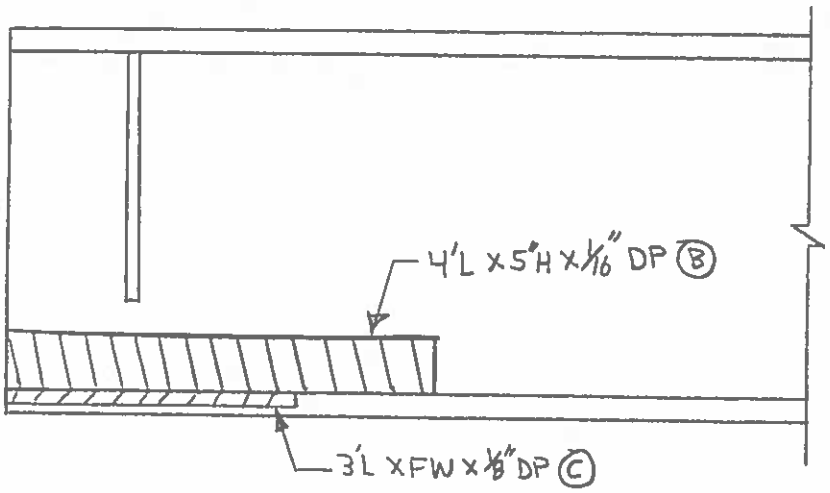

SPAN 6, BEAM 3
WEST ELEV. AT P7

REVISION	DATE	CREW	COMPANY	REVISION	DATE	CREW	COMPANY
1				3			
2				4			

Dewberry
59 Elm Street, Suite 101
New Haven, CT 06510

FIELD NOTES	JOB NO.	BRIDGE NO: 03014 A
	DATE: 7/9/14	SHEET OF
	CREW: RFP, PHH	

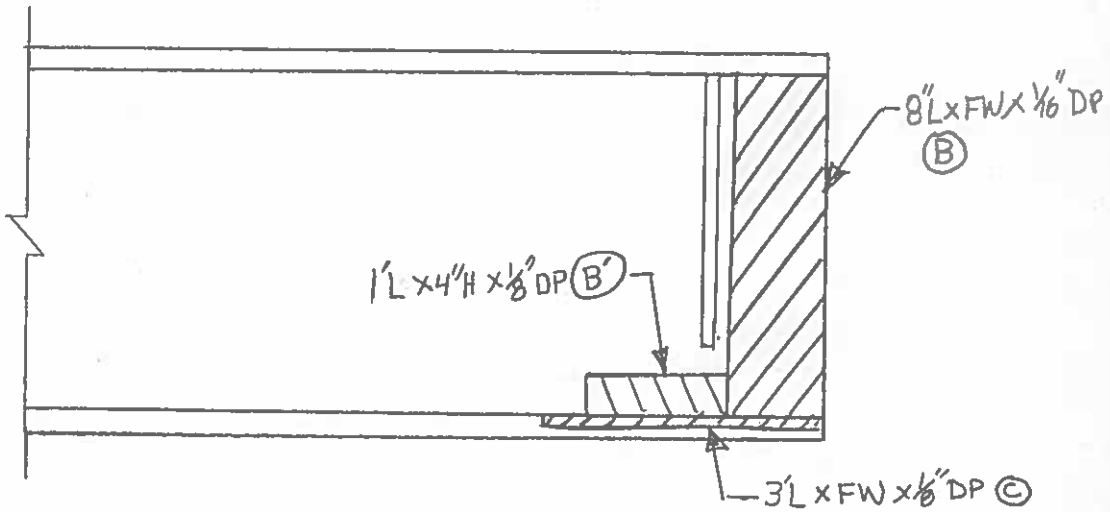

SPAN G, BEAM 4
EAST ELEV. AT P7

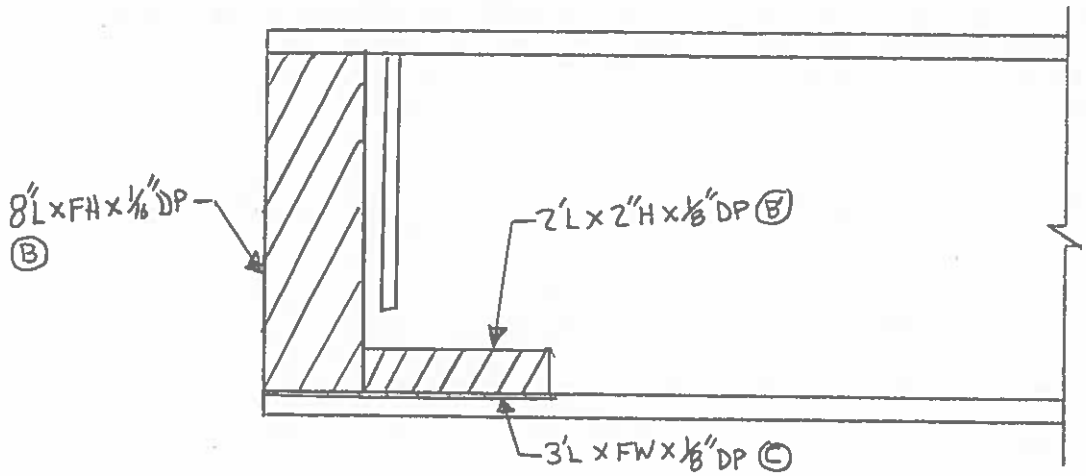

SPAN G, BEAM 4
WEST ELEV. AT P7

REVISION 1	DATE	CREW	COMPANY	REVISION 3	DATE	CREW	COMPANY
REVISION 2	DATE	CREW	COMPANY	REVISION 4	DATE	CREW	COMPANY

Dewberry
59 Elm Street, Suite 101
New Haven, CT 06510

FIELD NOTES	JOB NO.	BRIDGE NO: 03014 A
	DATE: 7/9/14	SHEET OF
	CREW: RFP, PHH	

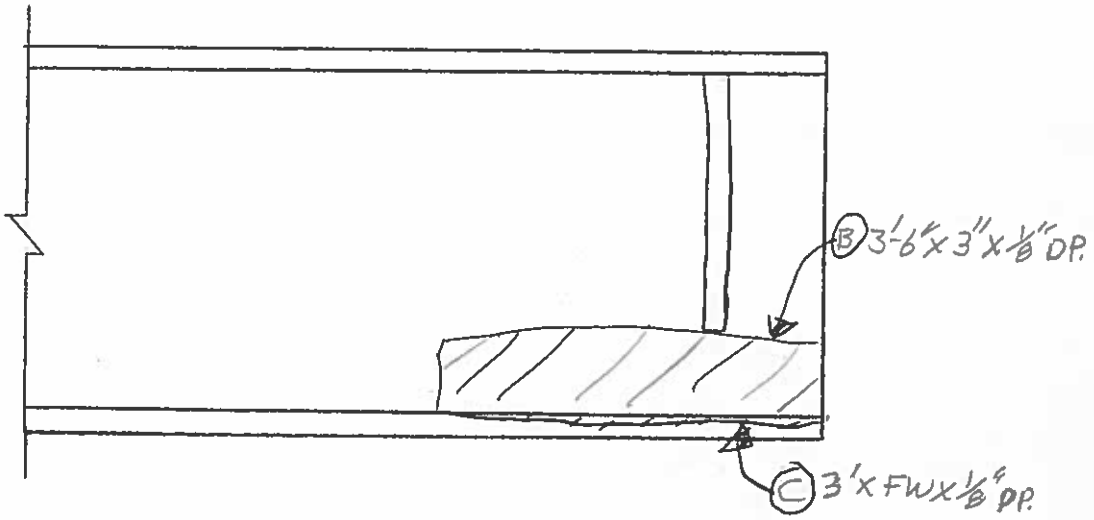

SPAN G, BEAM 5
EAST ELEV. AT P7

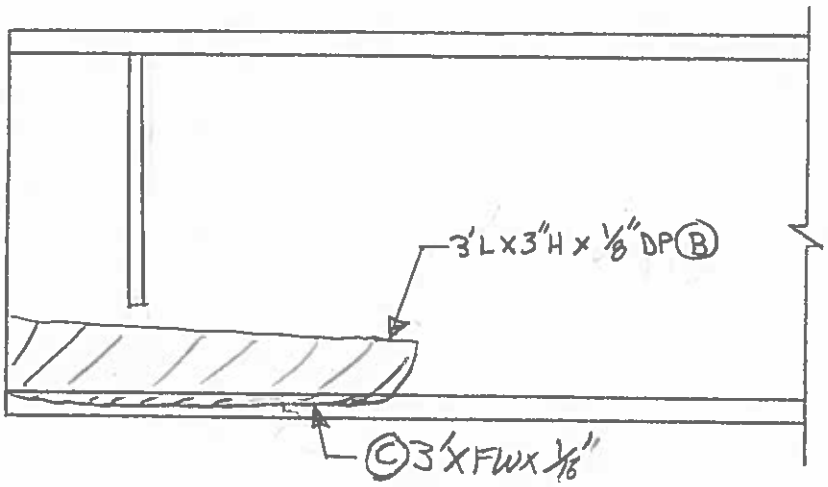

SPAN 6, BEAM 5
WEST ELEV. AT P7

REVISION 1	DATE	CREW	COMPANY	REVISION 3	DATE	CREW	COMPANY
REVISION 2	DATE	CREW	COMPANY	REVISION 4	DATE	CREW	COMPANY

Dewberry
59 Elm Street, Suite 101
New Haven, CT 06510

FIELD NOTES

JOB NO.

BRIDGE NO: 03014 A

DATE: 7/9/14

SHEET OF

CREW: RFP, PHH

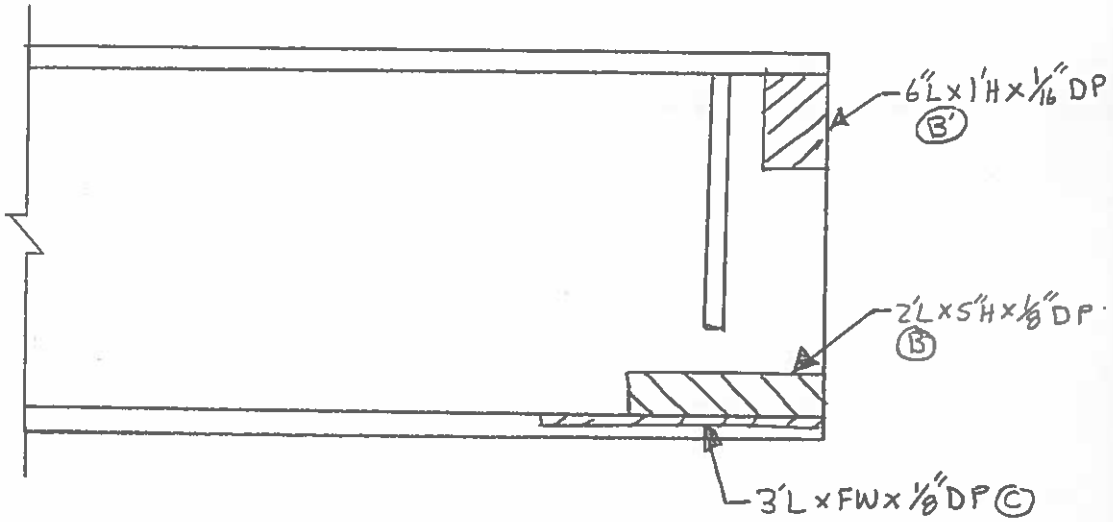

SPAN 6, BEAM 6
EAST ELEV. AT P7

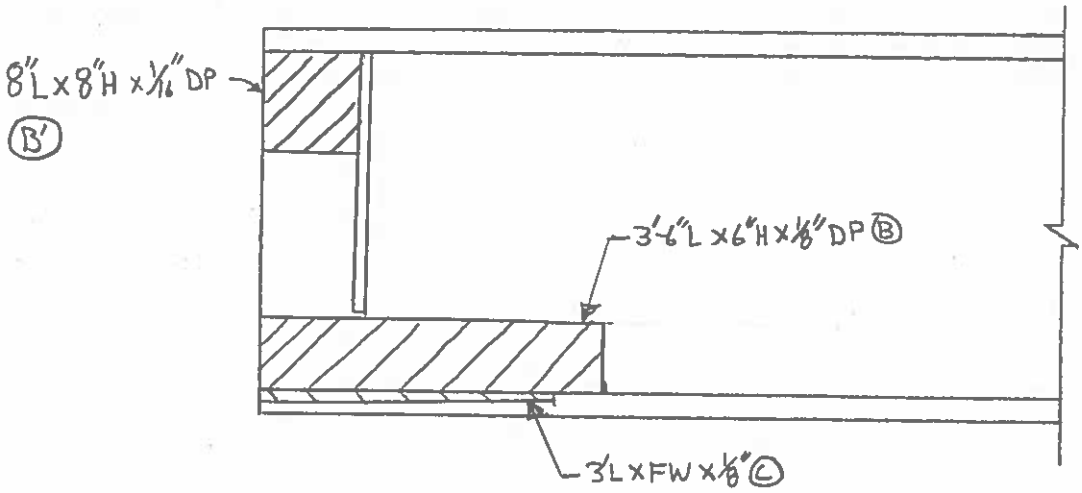

SPAN 6, BEAM 6
WEST ELEV. AT P7

REVISION	DATE	CREW	COMPANY	REVISION	DATE	CREW	COMPANY
1				3			
2				4			

Dewberry
59 Elm Street, Suite 101
New Haven, CT 06510

FIELD NOTES	JOB NO.	BRIDGE NO: 03014 A
	DATE: 7/2/2014	SHEET OF
	CREW: RFP, PHH	

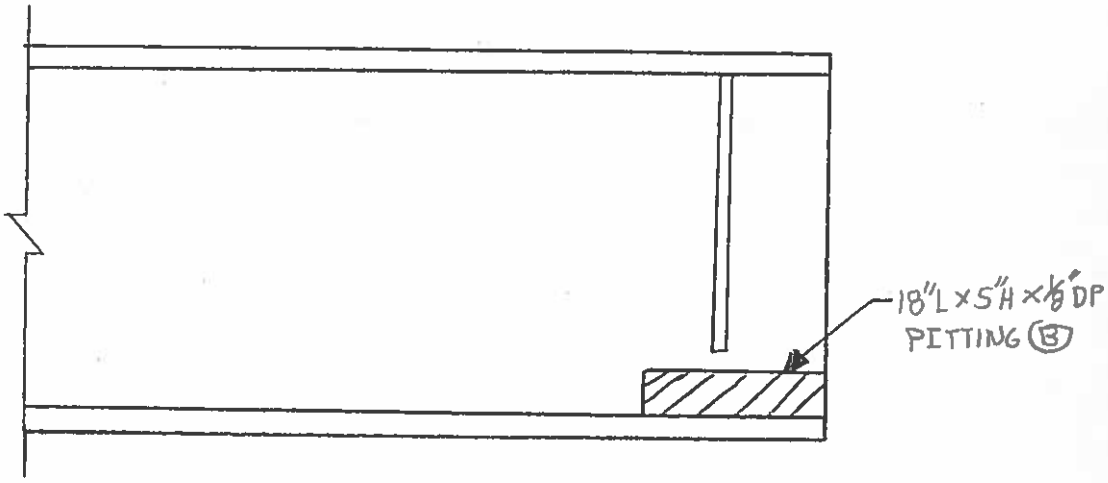

SPAN G, BEAM 7
EAST ELEV. AT P7

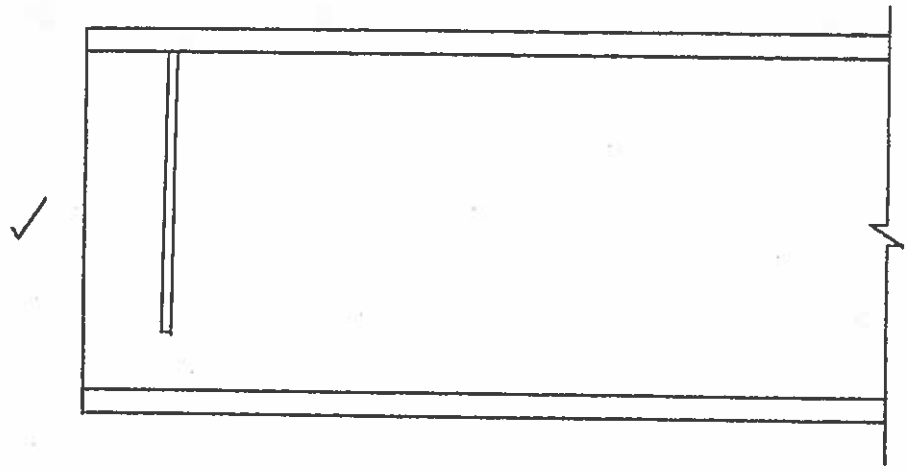

SPAN G, BEAM 7
WEST ELEV. AT P7

REVISION 1	DATE	CREW	COMPANY	REVISION 3	DATE	CREW	COMPANY
REVISION 2	DATE	CREW	COMPANY	REVISION 4	DATE	CREW	COMPANY

Dewberry	FIELD NOTES	JOB NO.	BRIDGE NO: 03014 A
59 Elm Street, Suite 101 New Haven, CT 06510		DATE: 7/2/2014	SHEET OF
		CREW: RFP, PHH	

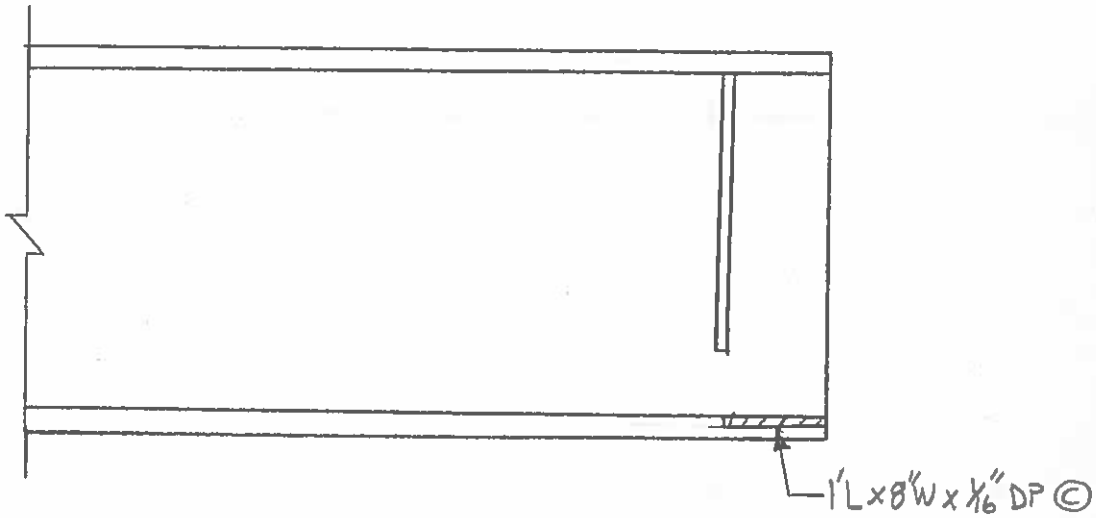

SPAN G, BEAM 8
EAST ELEV. AT P7

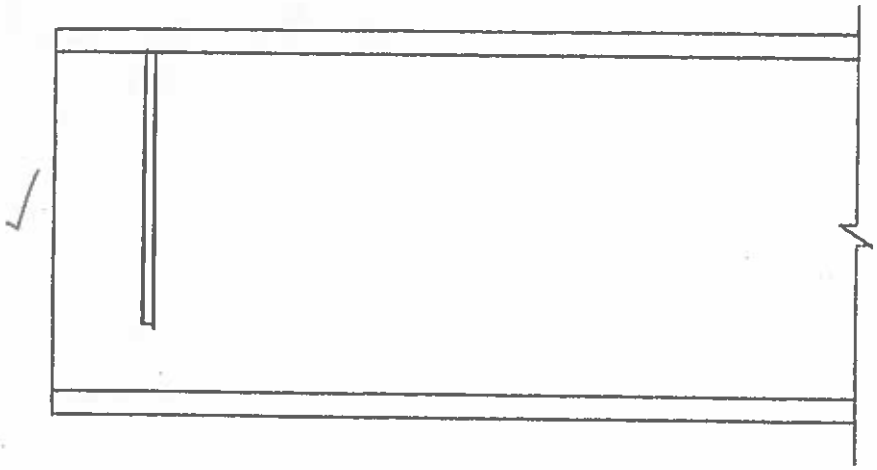

SPAN G, BEAM 8
WEST ELEV. AT P7

REVISION 1	DATE	CREW	COMPANY	REVISION 3	DATE	CREW	COMPANY
REVISION 2	DATE	CREW	COMPANY	REVISION 4	DATE	CREW	COMPANY

Dewberry	FIELD NOTES	JOB NO.	BRIDGE NO: 03014 A
59 Elm Street, Suite 101 New Haven, CT 06510		DATE: 7/2/2014	SHEET OF
		CREW: RFP, PHH	

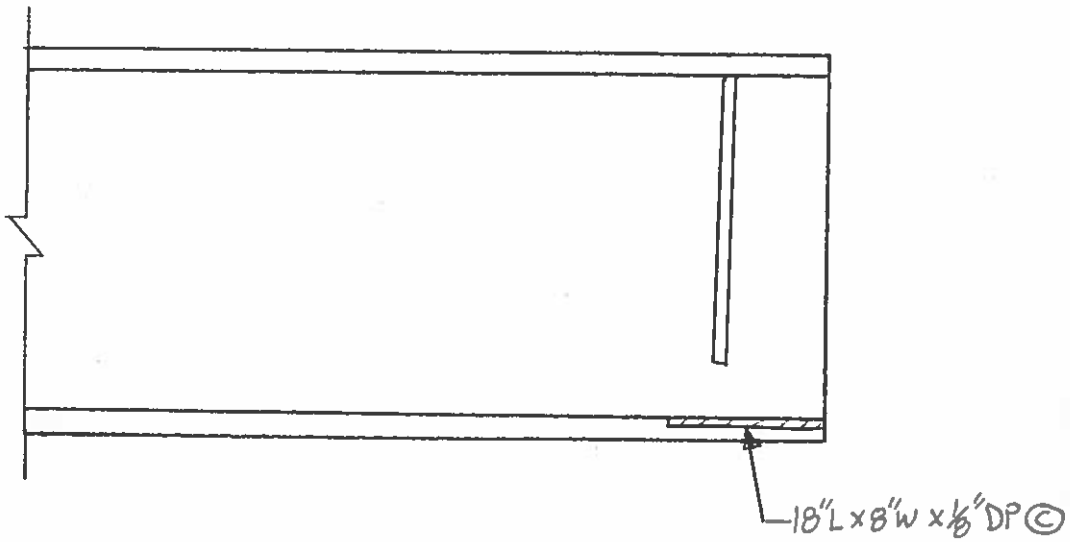

SPAN G, BEAM 9
EAST ELEV. AT P7

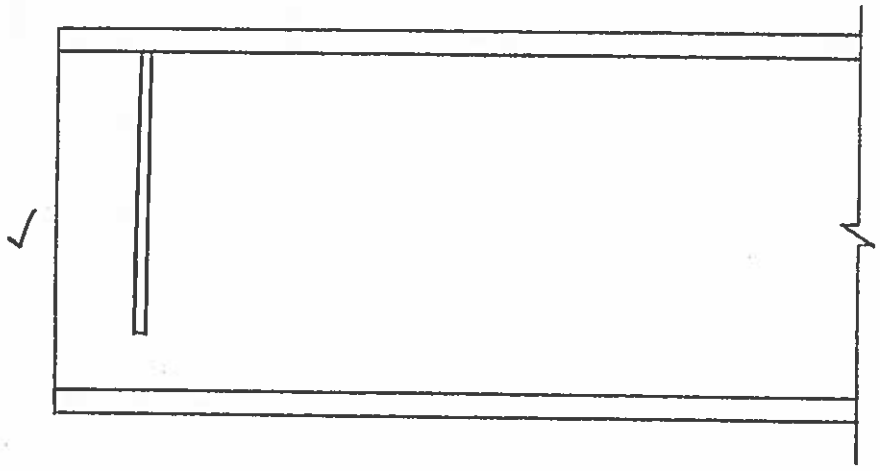

SPAN G, BEAM 9
WEST ELEV. AT P7

REVISION	DATE	CREW	COMPANY	REVISION	DATE	CREW	COMPANY
1				3			
2				4			

Dewberry
59 Elm Street, Suite 101
New Haven, CT 06510

FIELD NOTES

JOB NO.

BRIDGE NO: 03014 A

DATE: 7/2/2014

SHEET OF

CREW: RFP, PHH

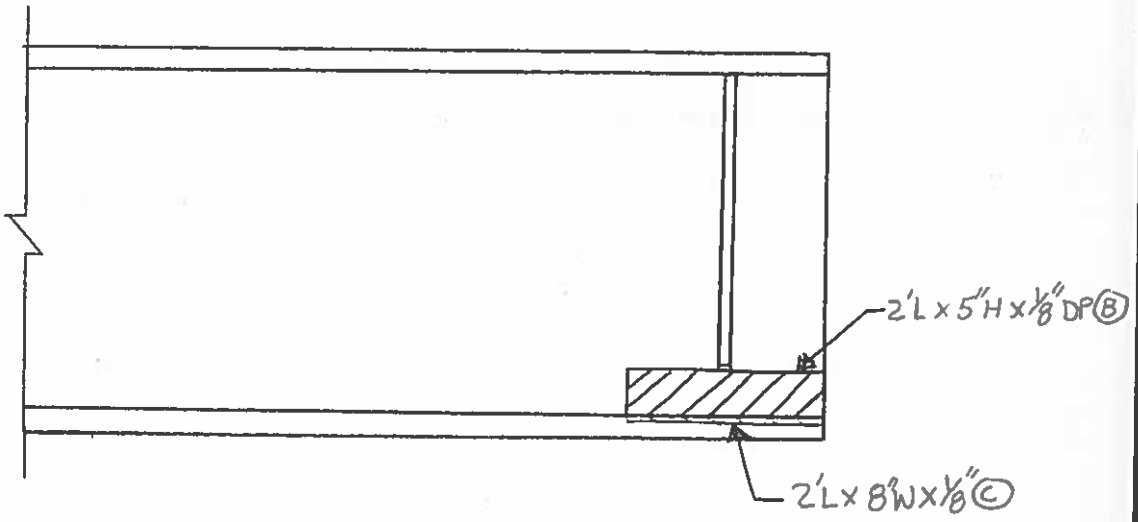

SPAN G, BEAM 10
EAST ELEV. AT P7

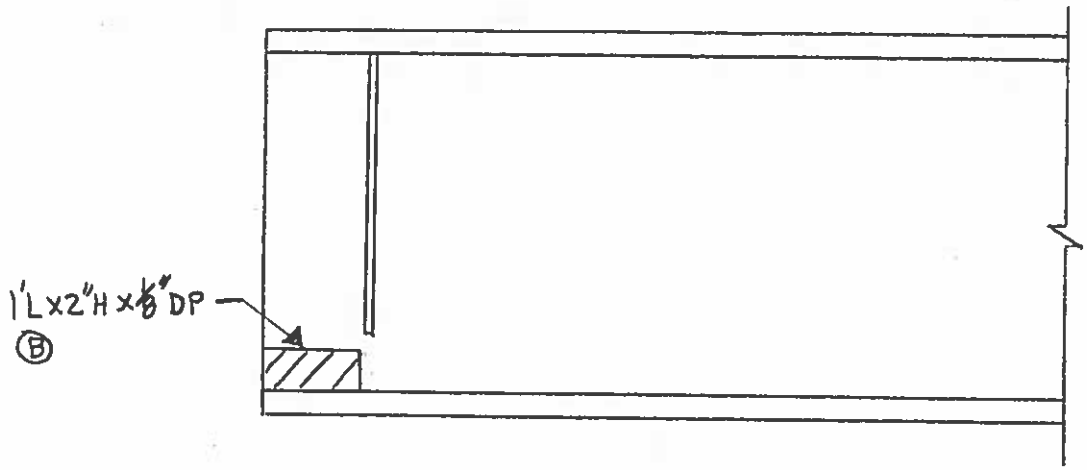

SPAN G, BEAM 10
WEST ELEV. AT P7

REVISION	DATE	CREW	COMPANY	REVISION	DATE	CREW	COMPANY
1				3			
2				4			

Dewberry
59 Elm Street, Suite 101
New Haven, CT 06510

FIELD NOTES

JOB NO.

BRIDGE NO: 03014 A

DATE: 7/2/2014

SHEET OF

CREW: RFP, PH#

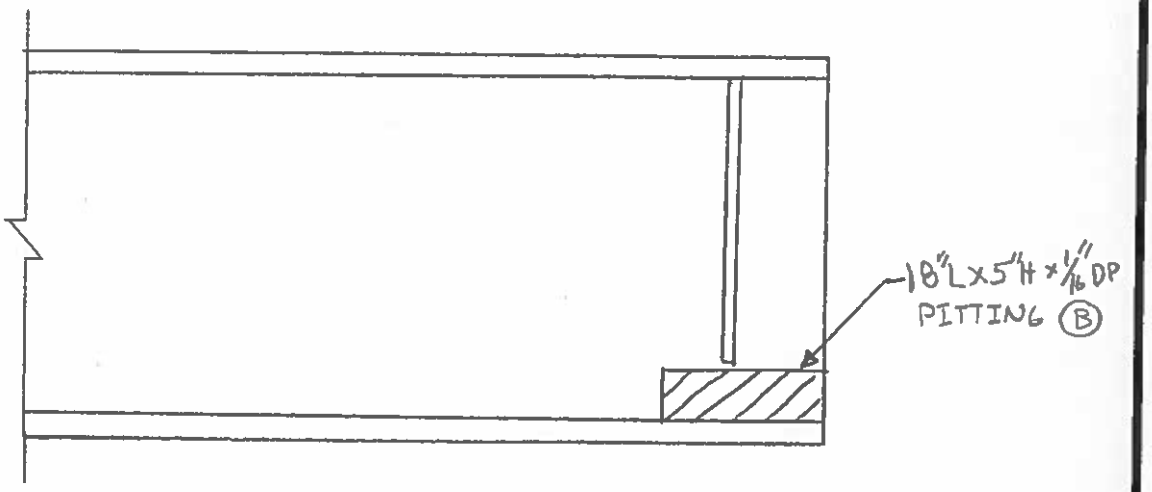

SPAN G, BEAM 11
EAST ELEV. AT P7

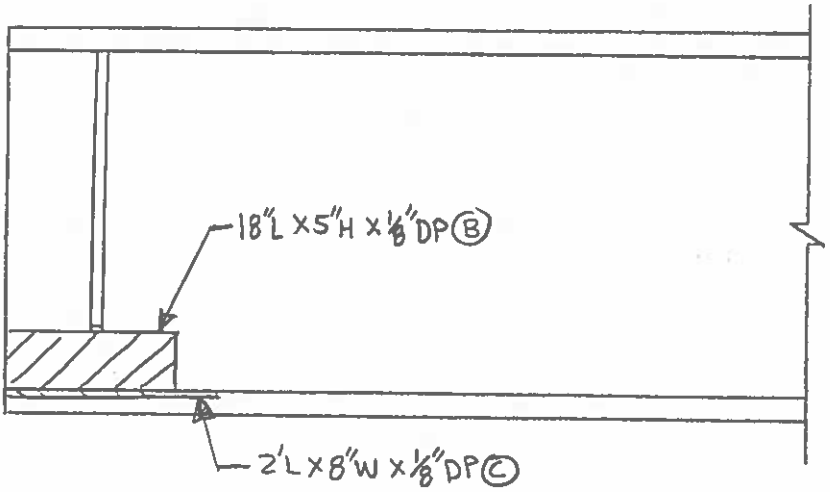

SPAN G, BEAM 11
WEST ELEV. AT P7

REVISION	DATE	CREW	COMPANY	REVISION	DATE	CREW	COMPANY
1				3			
2				4			

Dewberry®	FIELD NOTES	JOB NO.	BRIDGE NO: 03014 A
59 Elm Street, Suite 101 New Haven, CT 06510		DATE: 7/2/2014	SHEET OF
		CREW: RFP, PHH	

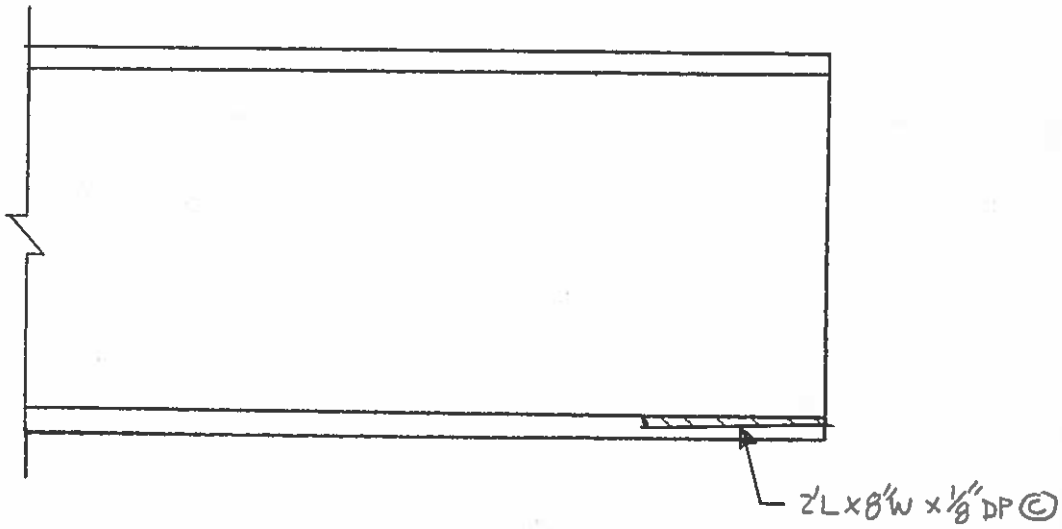

SPAN G, BEAM 12
EAST ELEV. AT P7

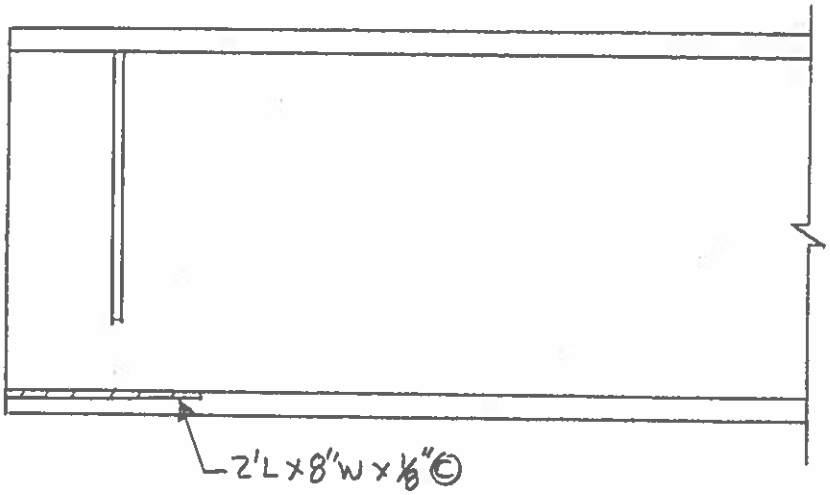

SPAN G, BEAM 12
WEST ELEV. AT P7

REVISION	DATE	CREW	COMPANY	REVISION	DATE	CREW	COMPANY
1				3			
2				4			

Dewberry® 59 Elm Street, Suite 101 New Haven, CT 06510	FIELD NOTES	JOB NO.	BRIDGE NO: 03014 A
		DATE: 7/9/19	SHEET OF
		CREW: RFD, PHN	

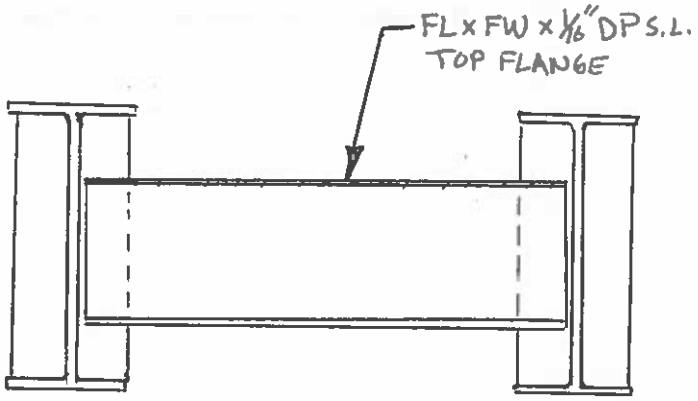

BAY 1 END DIAPHRAGM

SPAN G @ P7

REVISION 1	DATE	CREW	COMPANY	REVISION 3	DATE	CREW	COMPANY
REVISION 2	DATE	CREW	COMPANY	REVISION 4	DATE	CREW	COMPANY

SPAN H

FIELD NOTES

PREPARED BY: Garg Consulting Services, Inc.

PROJ. NO. 170-3013

BRIDGE NO. 3014A

DATE: 11/03/2010

SHEET 58 57

CREW: PDG, MD, SN, GF

Revision	Date	Crew	Company
2	7/21/14 & 7/31/14	RFD, PHH	DEW
1	9/10/12	PKG, AKC	GM2

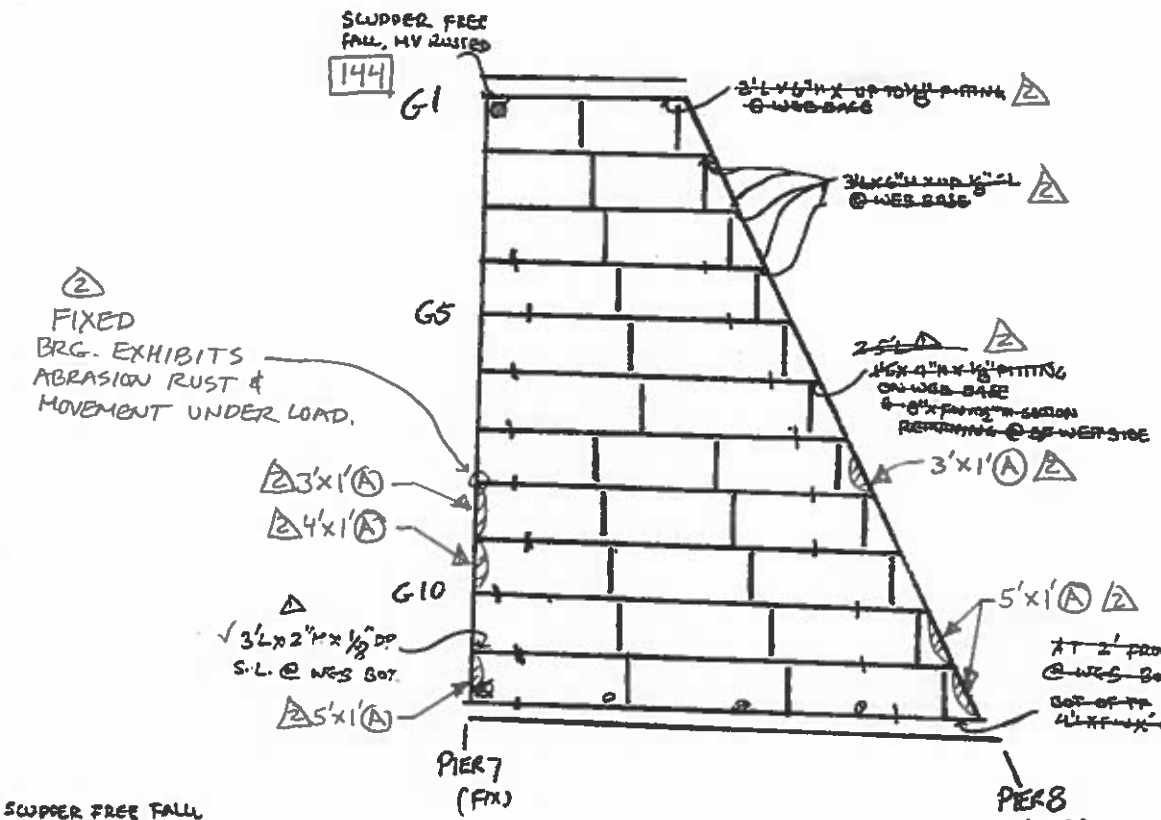

⊠ - SCUPPER FREE FALL (HEAVY RUSTED)
D - PVC WEEP
+ - BOTTOM CL TRANSITION 100' CHECKED HANDS-IN.

GENERAL NOTES:
- SEE SPANS A & C GENERAL NOTES

LEGEND
- HOLLOW AREA
- SHALLOW REBAR
- SPALL AREA
- SPALL AREA WITH EXPOSED REBAR
- MAP CRACKS OR HAIRLINE MAP CRACKS
- HAIRLINE CRACKS (HLC) OR CRACKS (CR)
- HONEY COMB AREA
- SCALE AREA (HVY, MED, OR LT)

FRAMING PLAN SPAN H

2 SEE DETAIL SHEETS FOR MORE INFORMATION

Dewberry
59 Elm Street, Suite 101
New Haven, CT 06510

FIELD NOTES

JOB NO.

BRIDGE NO: 03014A

DATE: 7/9/2014

SHEET OF

CREW: RFP, PHH

- MODERATE SURFACE RUST

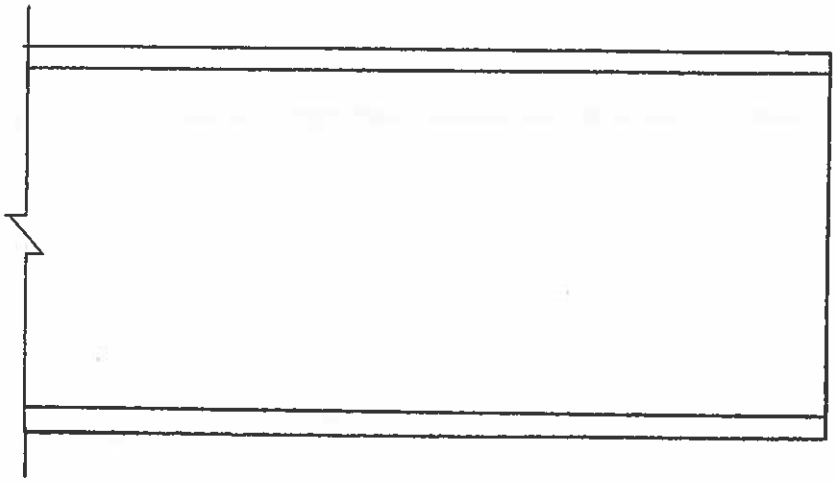

SPAN H, BEAM 1
WEST ELEV. AT P7

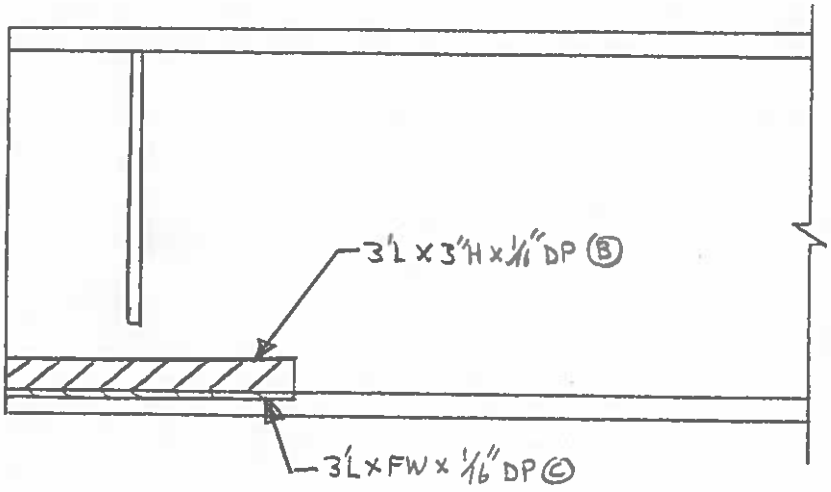

SPAN H, BEAM 1
EAST ELEV. AT P7

REVISION	DATE	CREW	COMPANY	REVISION	DATE	CREW	COMPANY
1				3			
2				4			

Dewberry
59 Elm Street, Suite 101
New Haven, CT 06510

FIELD NOTES

JOB NO.

BRIDGE NO: 03014A

DATE: 7/9/2014

SHEET OF

CREW: RFP, PHH

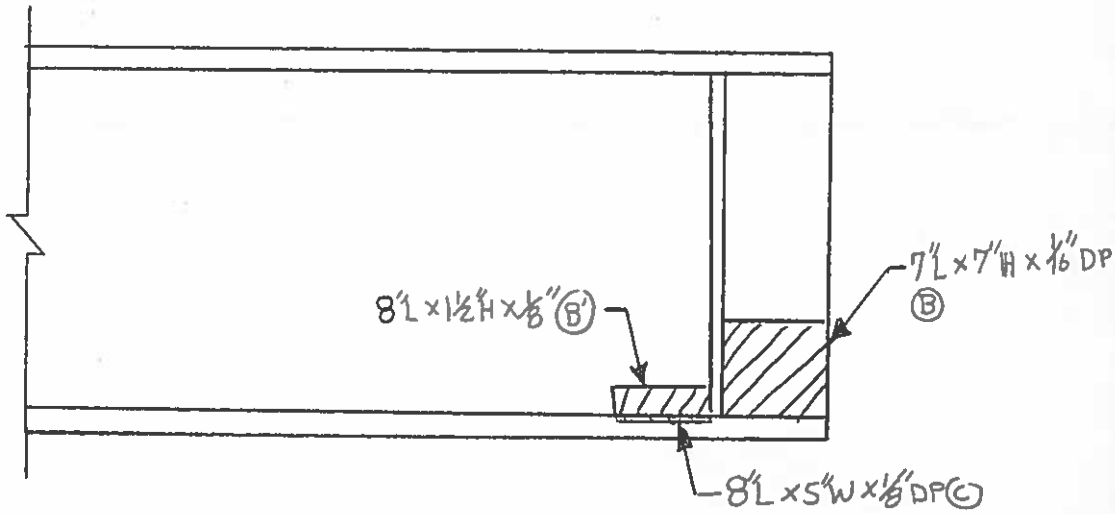

SPAN H, BEAM 2
WEST ELEV. AT P7

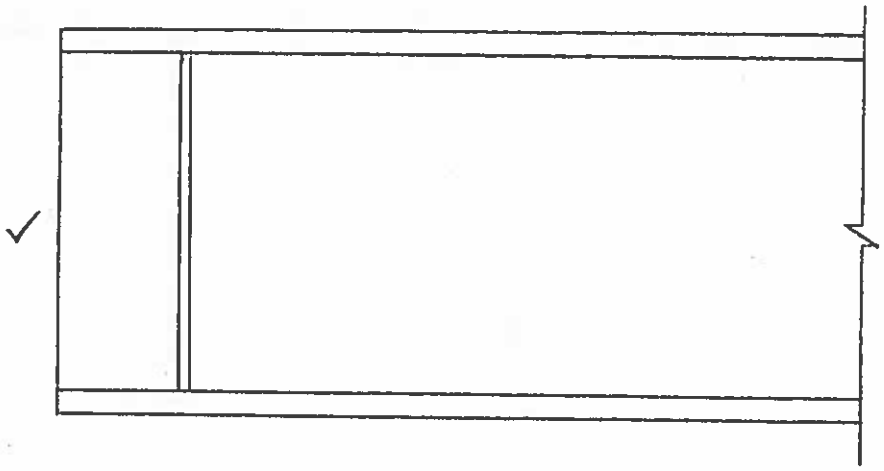

SPAN H, BEAM 2
EAST ELEV. AT P7

REVISION	DATE	CREW	COMPANY	REVISION	DATE	CREW	COMPANY
1				3			
2				4			

Dewberry®	FIELD NOTES	JOB NO.	BRIDGE NO: 03014 A
59 Elm Street, Suite 101 New Haven, CT 06510		DATE: 7/9/2014	SHEET OF
		CREW: RPP, PHA	

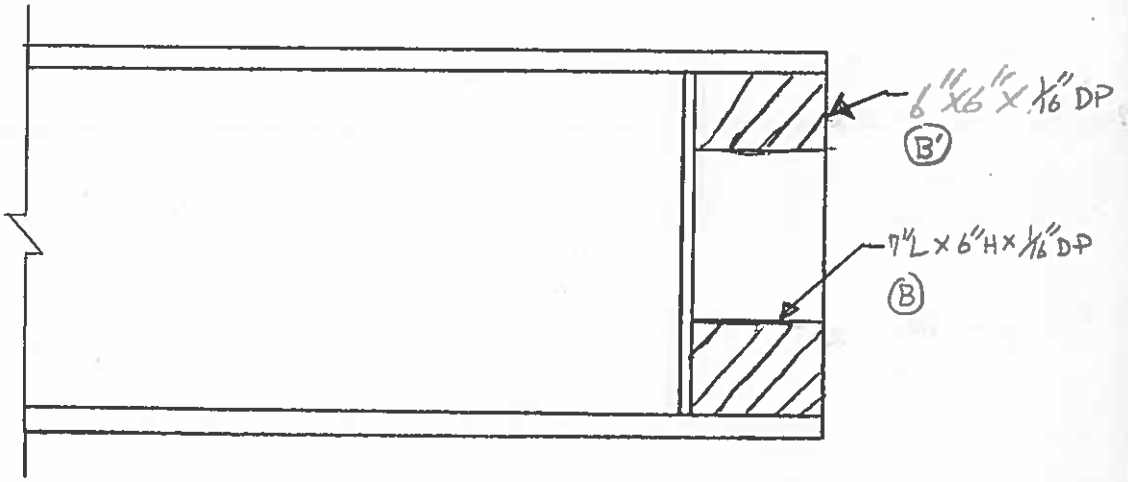

SPAN H, BEAM 3
WEST ELEV. AT P7

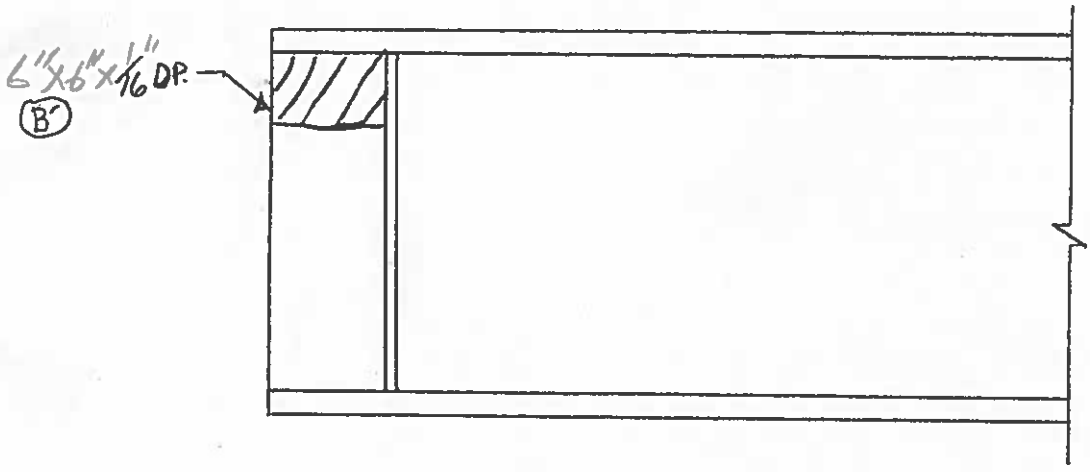

SPAN H, BEAM 3
EAST ELEV. AT P7

REVISION 1	DATE	CREW	COMPANY	REVISION 3	DATE	CREW	COMPANY
REVISION 2	DATE	CREW	COMPANY	REVISION 4	DATE	CREW	COMPANY

Dewberry
59 Elm Street, Suite 101
New Haven, CT 06510

FIELD NOTES	JOB NO.	BRIDGE NO: 03014 A
	DATE: 7/10/14	SHEET OF
	CREW: RFP, PHH	

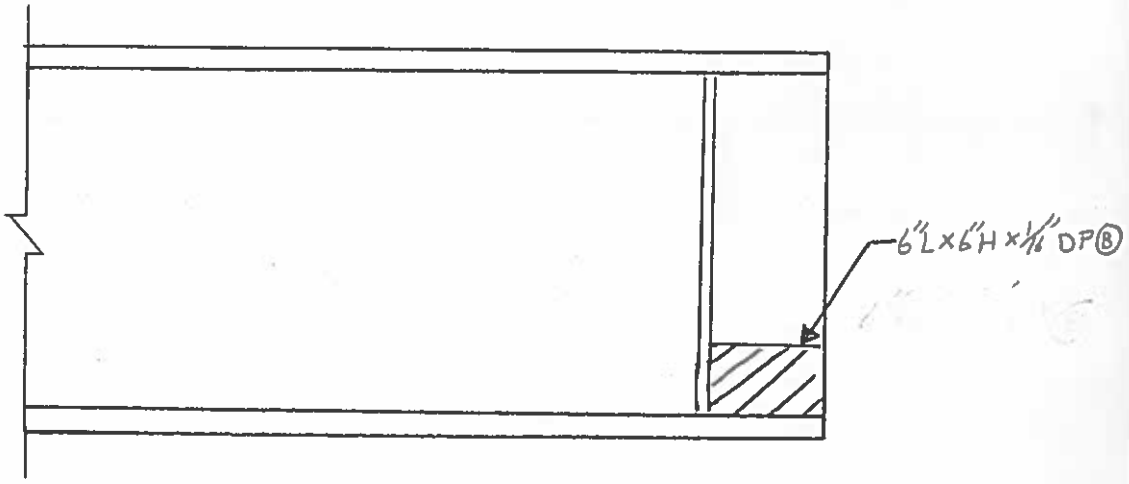

SPAN H, BEAM 4
WEST ELEV. AT P7

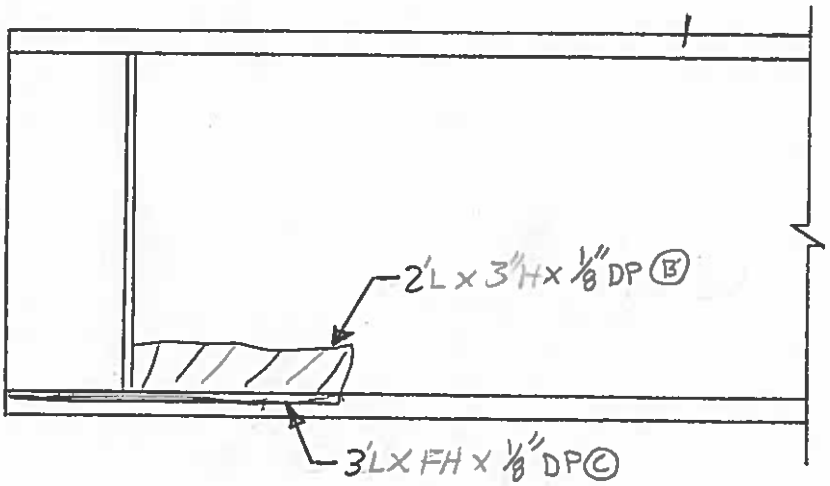

SPAN H, BEAM 4
EAST ELEV. AT P7

REVISION 1	DATE	CREW	COMPANY	REVISION 3	DATE	CREW	COMPANY
REVISION 2	DATE	CREW	COMPANY	REVISION 4	DATE	CREW	COMPANY

Dewberry® 59 Elm Street, Suite 101 New Haven, CT 06510	FIELD NOTES	JOB NO.	BRIDGE NO: 03014 A
		DATE: 7/10/14	SHEET OF
		CREW: RFP, PHH	

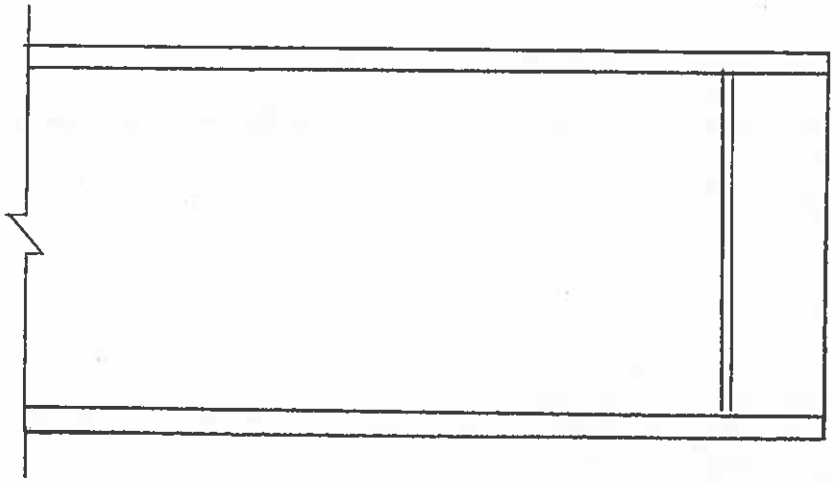

SPAN H , BEAM 5
WEST ELEV. AT P7

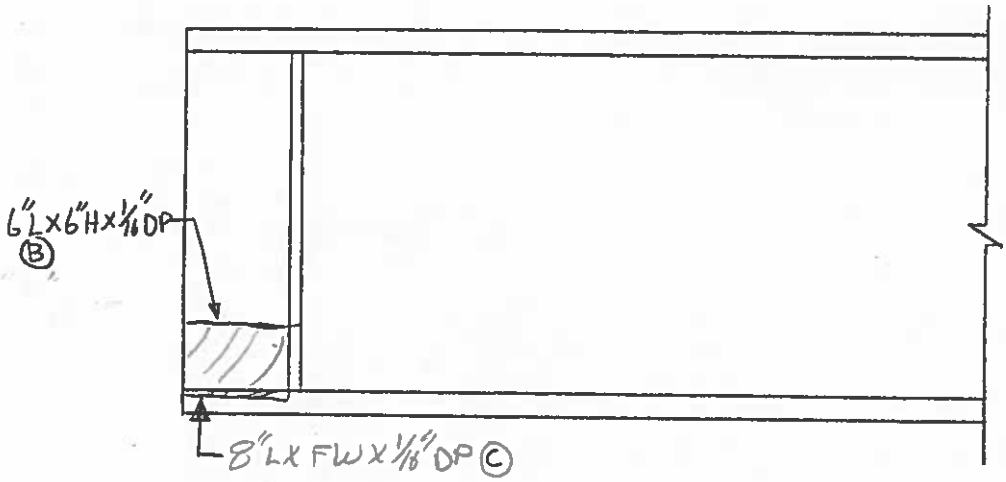

SPAN H , BEAM 5
EAST ELEV. AT P7

REVISION 1	DATE	CREW	COMPANY	REVISION 3	DATE	CREW	COMPANY
REVISION 2	DATE	CREW	COMPANY	REVISION 4	DATE	CREW	COMPANY

Dewberry
59 Elm Street, Suite 101
New Haven, CT 06510

FIELD NOTES

JOB NO.

BRIDGE NO: 03014 A

DATE: 7/10/14

SHEET OF

CREW: RFP, PHH

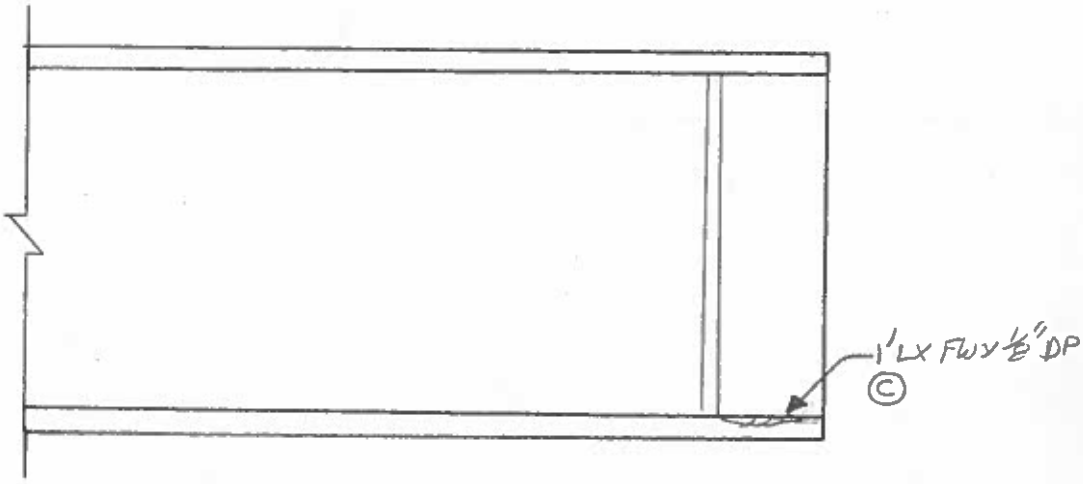

SPAN H, BEAM 6
EAST ELEV. AT P7

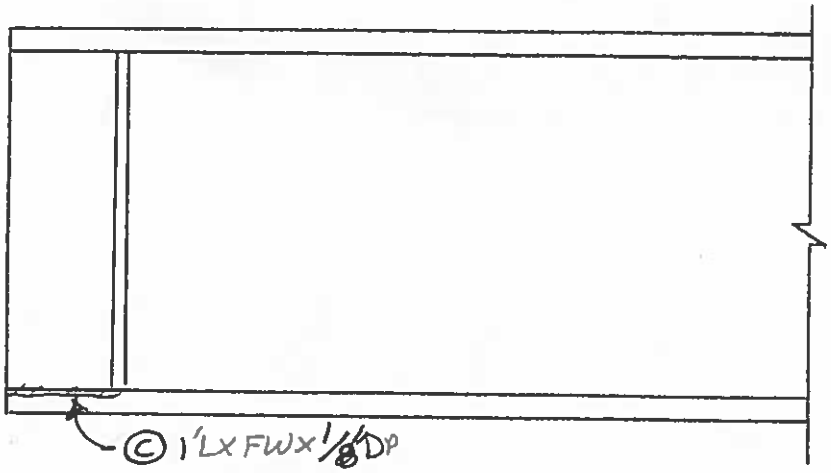

SPAN H, BEAM 6
WEST ELEV. AT P7

REVISION	DATE	CREW	COMPANY	REVISION	DATE	CREW	COMPANY
1				3			
2				4			

Dewberry
59 Elm Street, Suite 101
New Haven, CT 06510

FIELD NOTES

JOB NO.

BRIDGE NO: 03014A

DATE: 7/2/2014

SHEET OF

CREW: RFP, PHH

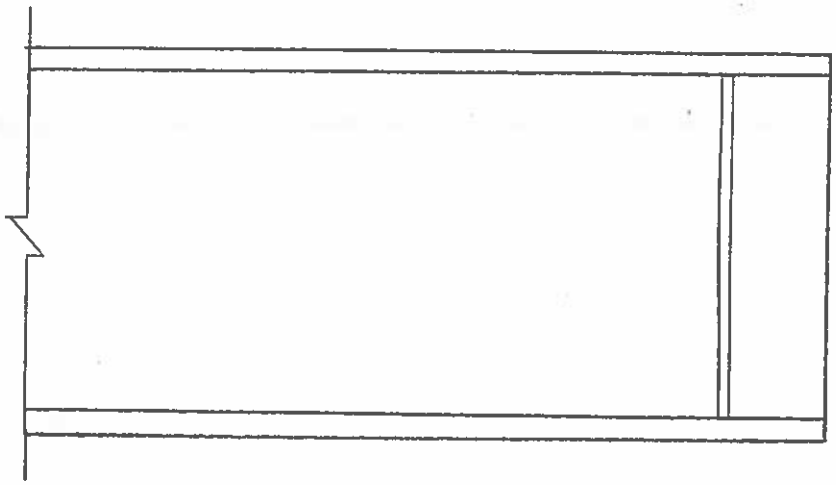

SPAN H, BEAM 7
WEST ELEV. AT P7

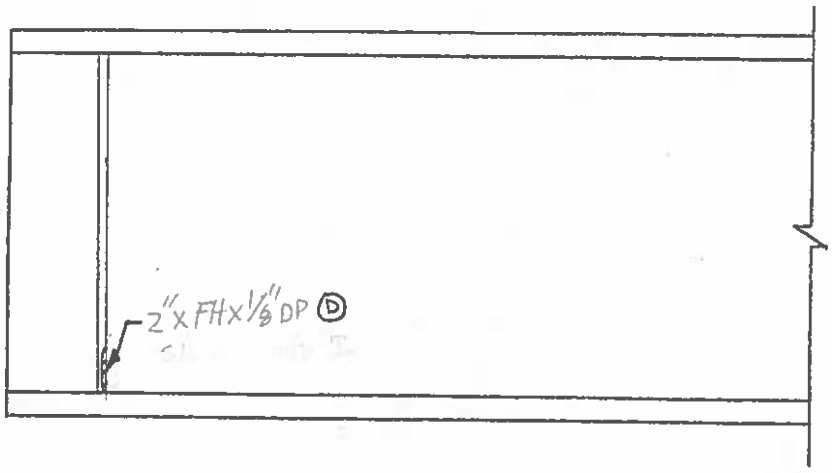

SPAN H, BEAM 7
EAST ELEV. AT P7

REVISION	DATE	CREW	COMPANY	REVISION	DATE	CREW	COMPANY
1				3			
2				4			

Dewberry®
59 Elm Street, Suite 101
New Haven, CT 06510

FIELD NOTES

JOB NO.

BRIDGE NO: 03014A

DATE: 7/2/2014

SHEET OF

CREW: RFP, PHH

• NO SECTION LOSS NOTED

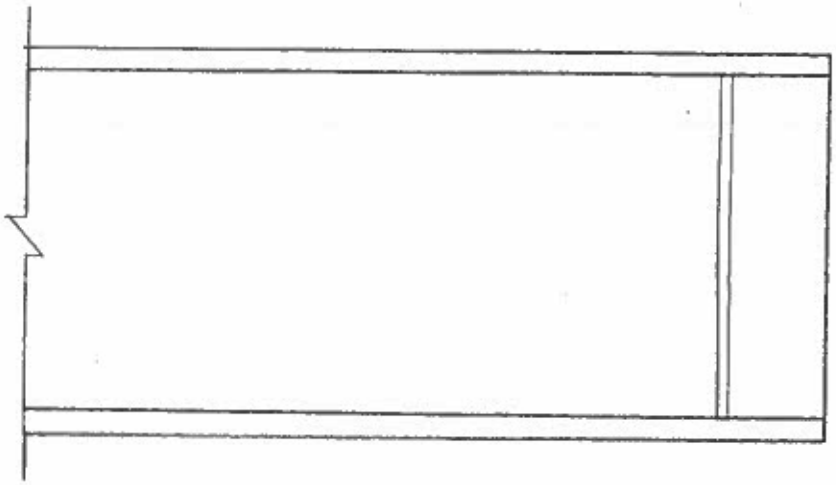

SPAN H, BEAM 8
WEST ELEV. AT P7

• TOP OF WEB TIPPED 3/16" WEST OVER 2'

• FIXED BEARING EXHIBITS ABRASION RUST & MOVEMENT UNDER LOAD.

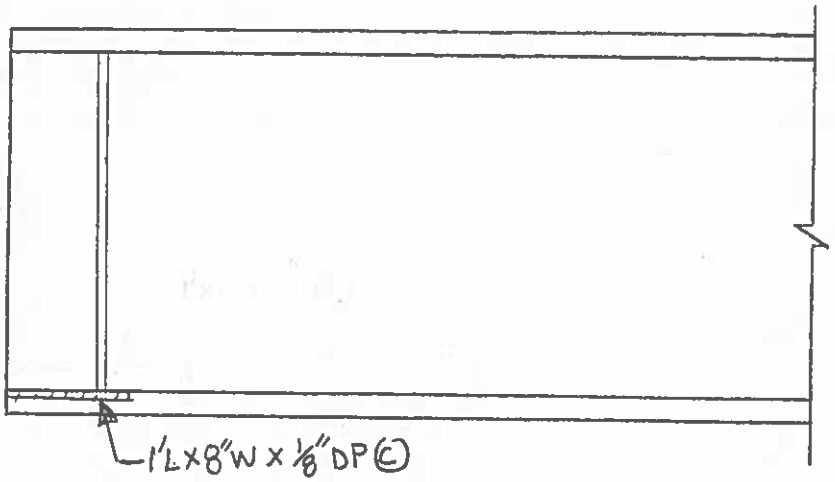

SPAN H, BEAM 8
EAST ELEV. AT P7

REVISION	DATE	CREW	COMPANY	REVISION	DATE	CREW	COMPANY
1				3			
2				4			

Dewberry

59 Elm Street, Suite 101
New Haven, CT 06510

FIELD NOTES

JOB NO.

BRIDGE NO: 03014A

DATE: 7/2/2014

SHEET OF

CREW: RFP, PHH

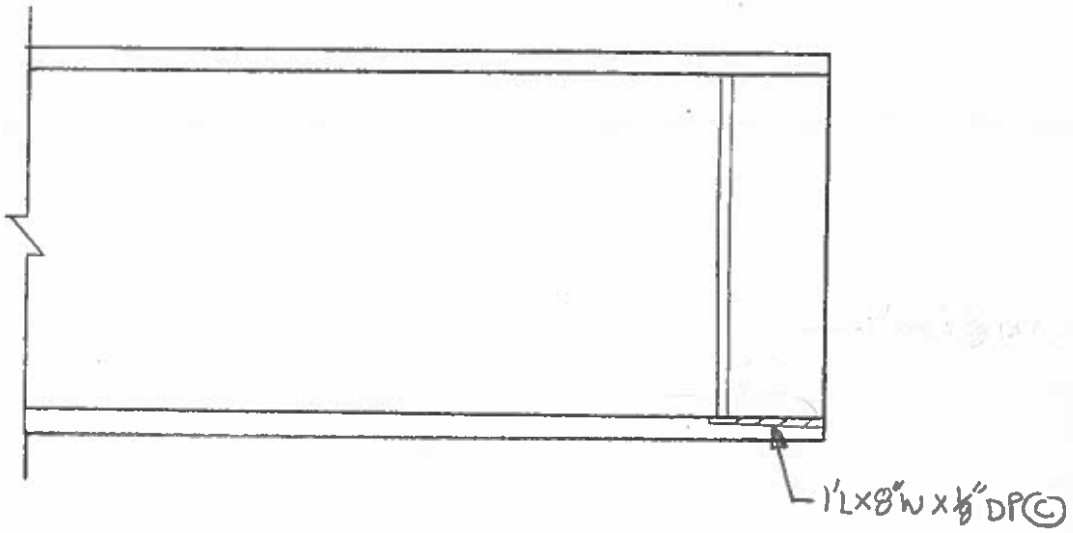

SPAN H, BEAM 9
WEST ELEV. AT P7

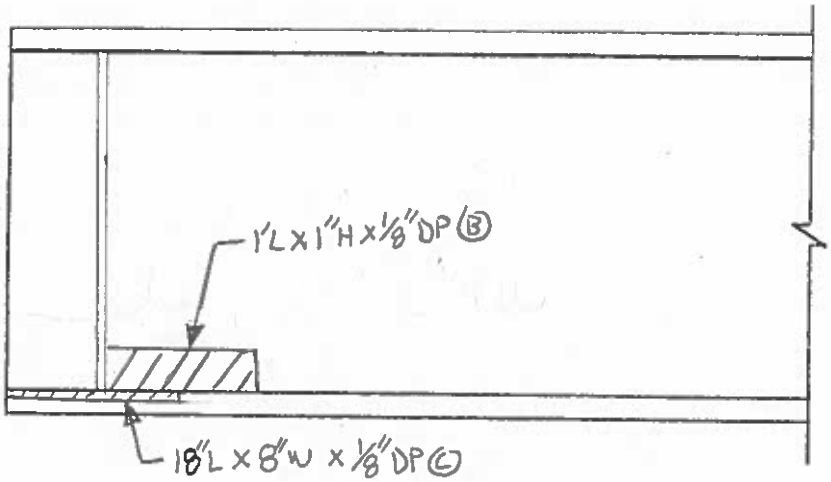

SPAN H, BEAM 9
EAST ELEV. AT P7

REVISION	DATE	CREW	COMPANY	REVISION	DATE	CREW	COMPANY
1				3			
2				4			

Dewberry
59 Elm Street, Suite 101
New Haven, CT 06510

FIELD NOTES

JOB NO.

BRIDGE NO: 03014A

DATE: 7/2/2014

SHEET OF

CREW: RFP, PHH

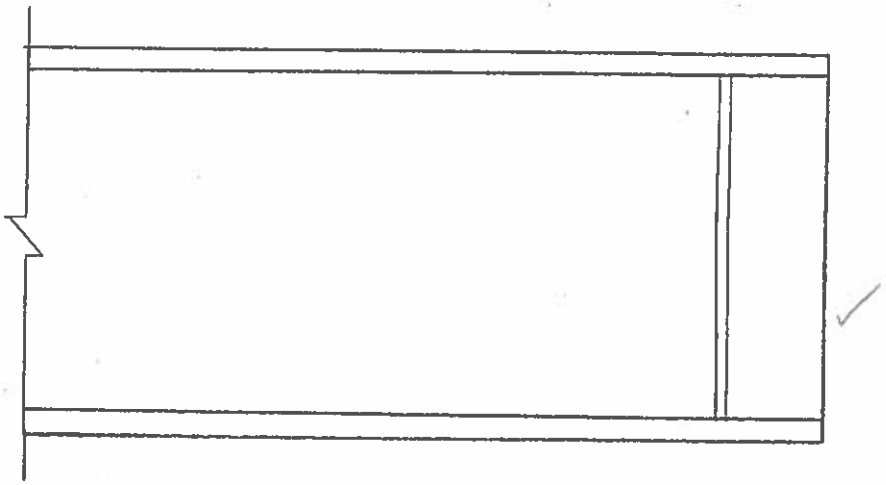

SPAN H, BEAM 10
WEST ELEV. AT P7

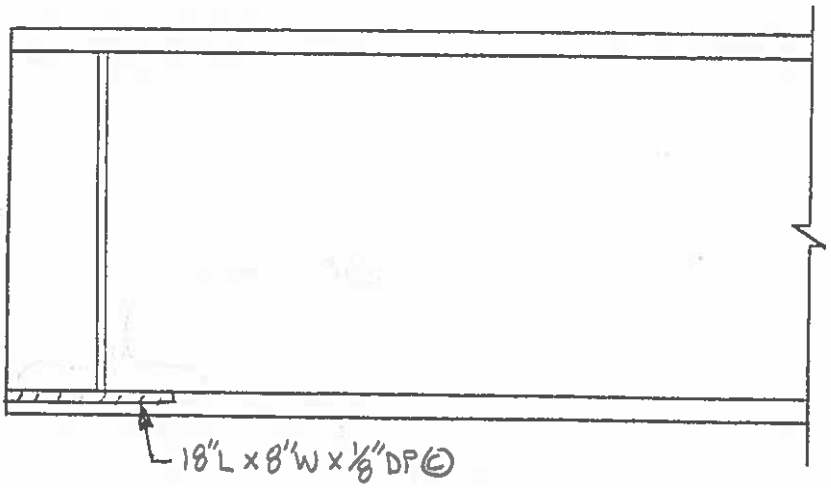

SPAN H, BEAM 10
EAST ELEV. AT P7

REVISION	DATE	CREW	COMPANY	REVISION	DATE	CREW	COMPANY
1				3			
2				4			

Dewberry
59 Elm Street, Suite 101
New Haven, CT 06510

FIELD NOTES

JOB NO.

BRIDGE NO: 03014A

DATE: 7/2/2014

SHEET OF

CREW: RFP, PHH

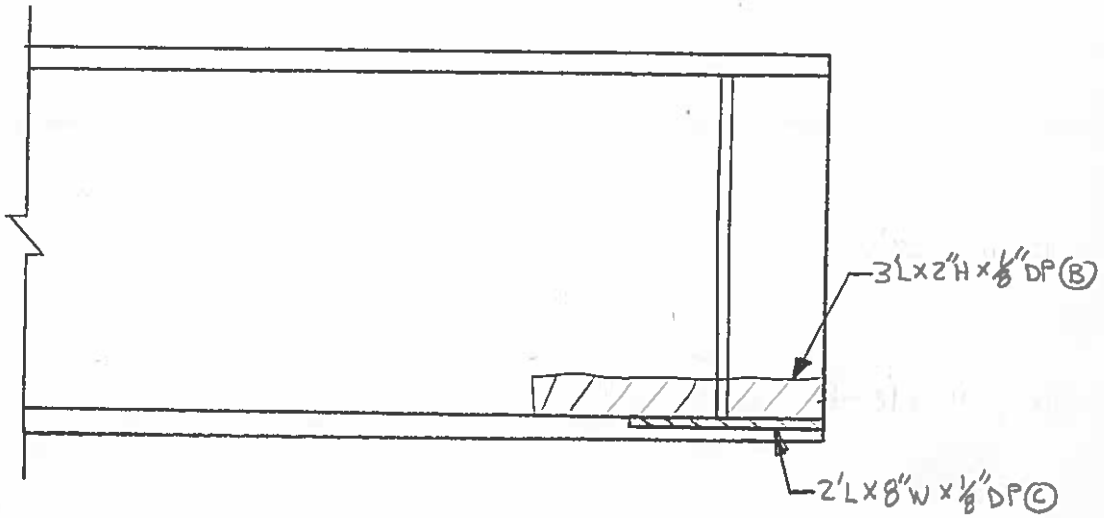

SPAN H, BEAM 11
WEST ELEV. AT P7

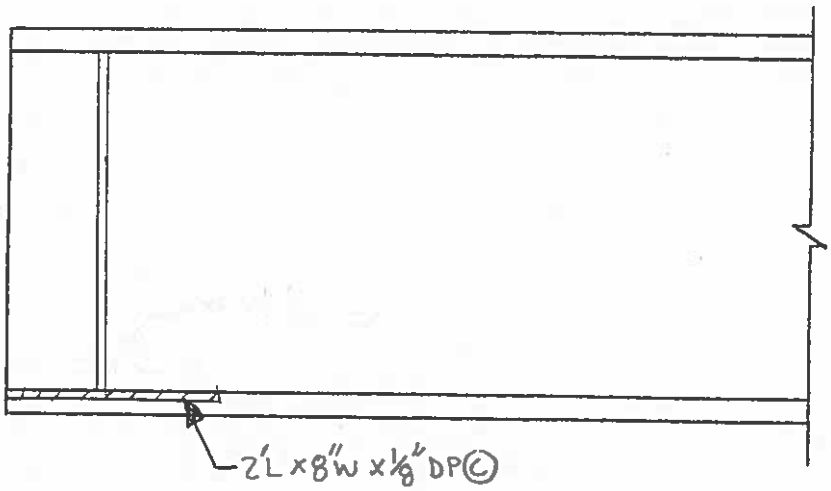

SPAN H, BEAM 11
EAST ELEV. AT P7

REVISION	DATE	CREW	COMPANY	REVISION	DATE	CREW	COMPANY
1				3			
2				4			

Dewberry	FIELD NOTES	JOB NO.	BRIDGE NO: 03014 A
59 Elm Street, Suite 101 New Haven, CT 06510		DATE: 7/2/2014	SHEET OF
		CREW: RFP, PHH	

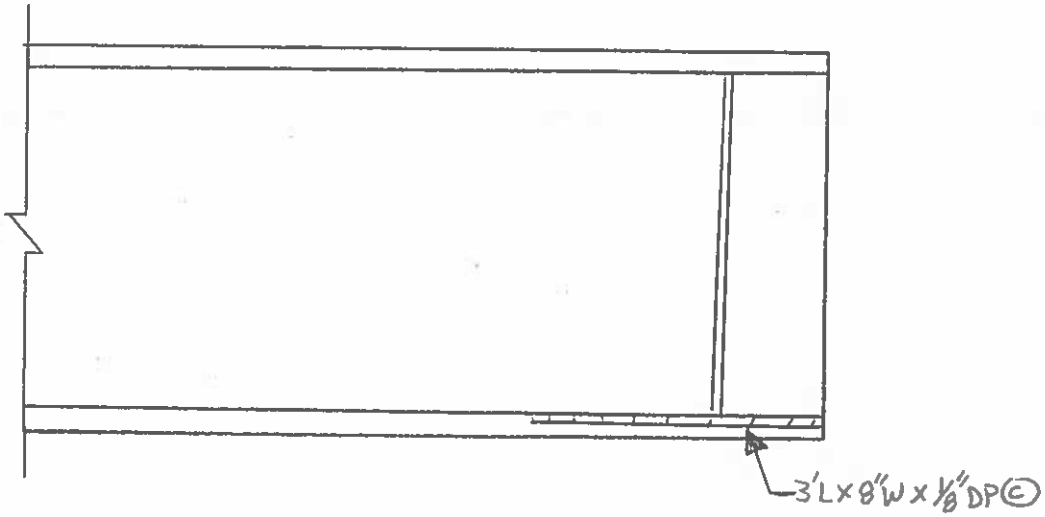

SPAN H, BEAM 12
WEST ELEV. AT P7

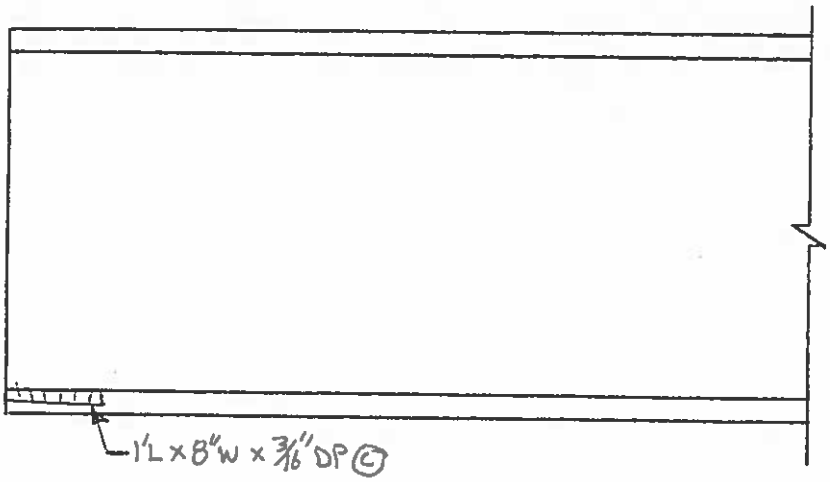

SPAN H, BEAM 12
EAST ELEV. AT P7

REVISION	DATE	CREW	COMPANY	REVISION	DATE	CREW	COMPANY
1				3			
2				4			

Dewberry
59 Elm Street, Suite 101
New Haven, CT 06510

FIELD NOTES

JOB NO.

BRIDGE NO: 03014 A

DATE: 7/10/14

SHEET OF

CREW: RFP, PHH

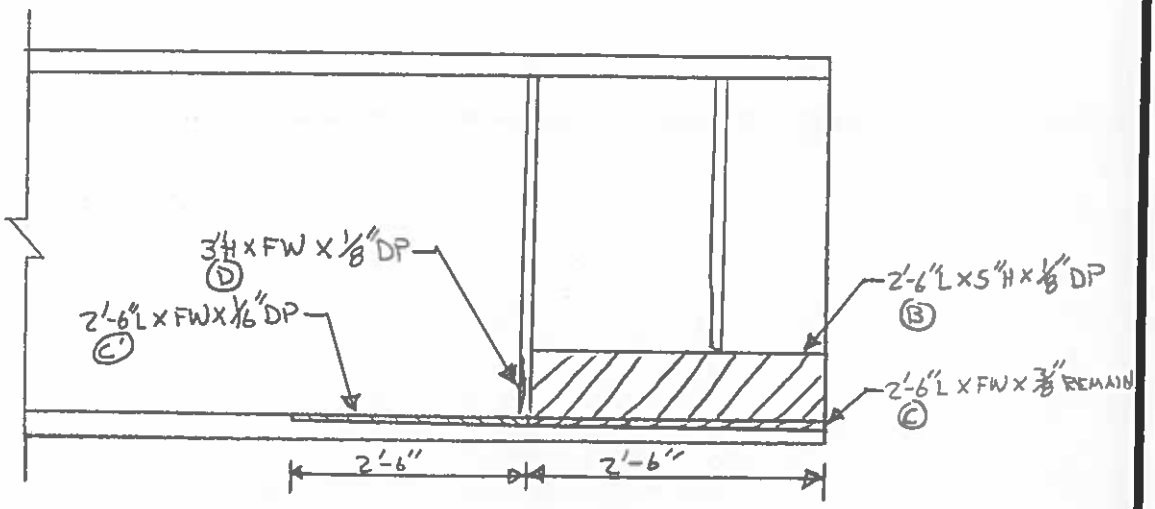

SPAN H, BEAM 1
EAST ELEV. AT P8

*WEB BOWED 1/4" EAST

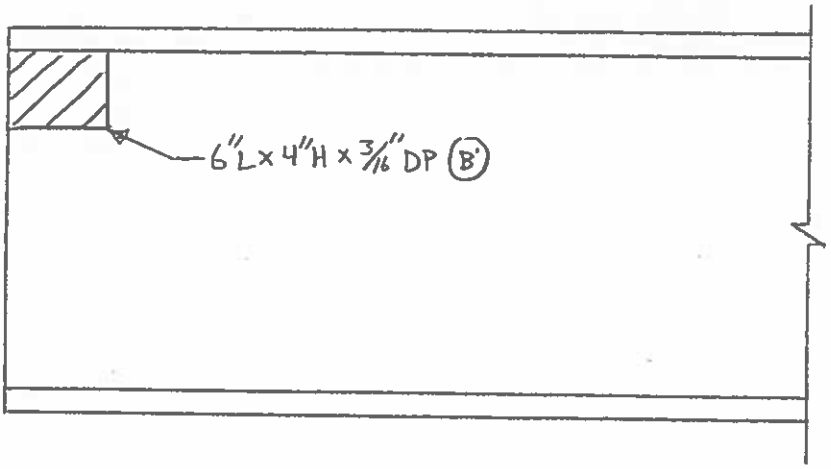

SPAN H, BEAM 1
WEST ELEV. AT P8

REVISION	DATE	CREW	COMPANY	REVISION	DATE	CREW	COMPANY
1				3			
2				4			

Dewberry
59 Elm Street, Suite 101
New Haven, CT 06510

FIELD NOTES

JOB NO.

BRIDGE NO: 03014A

DATE: 7/10/14

SHEET OF

CREW: RFP, PHH

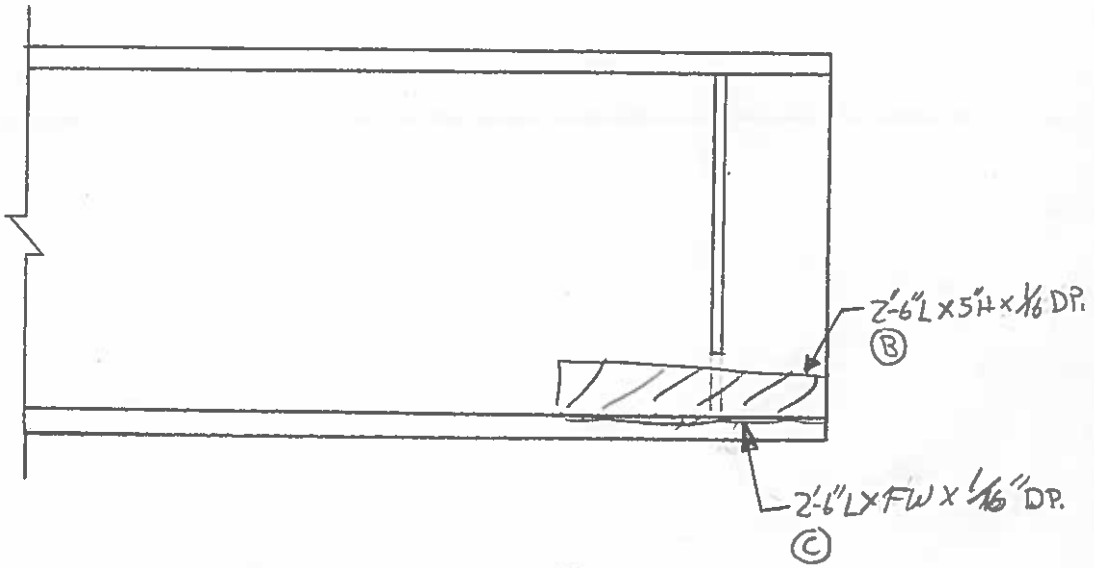

SPAN H, BEAM 2
EAST ELEV. AT P8

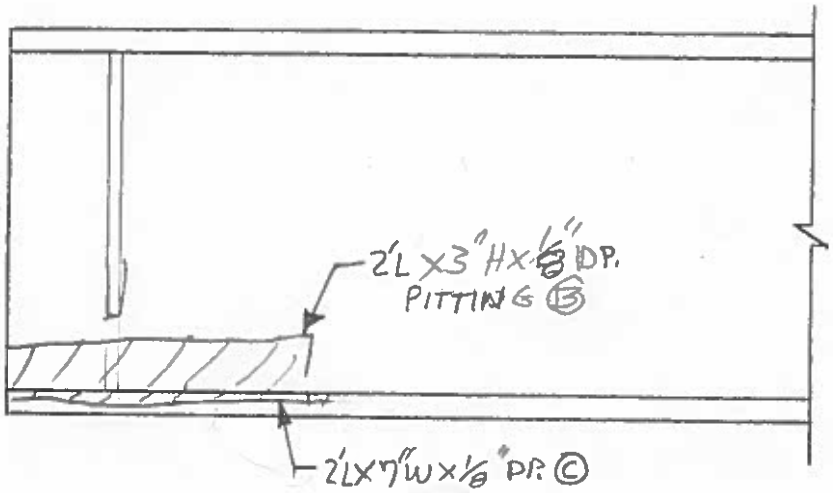

SPAN H, BEAM 2
ELEV. AT P8

REVISION	DATE	CREW	COMPANY	REVISION	DATE	CREW	COMPANY
1				3			
2				4			

Dewberry
59 Elm Street, Suite 101
New Haven, CT 06510

FIELD NOTES

JOB NO.

BRIDGE NO: 03014A

DATE: 7/10/14

SHEET OF

CREW: RFP, PHH

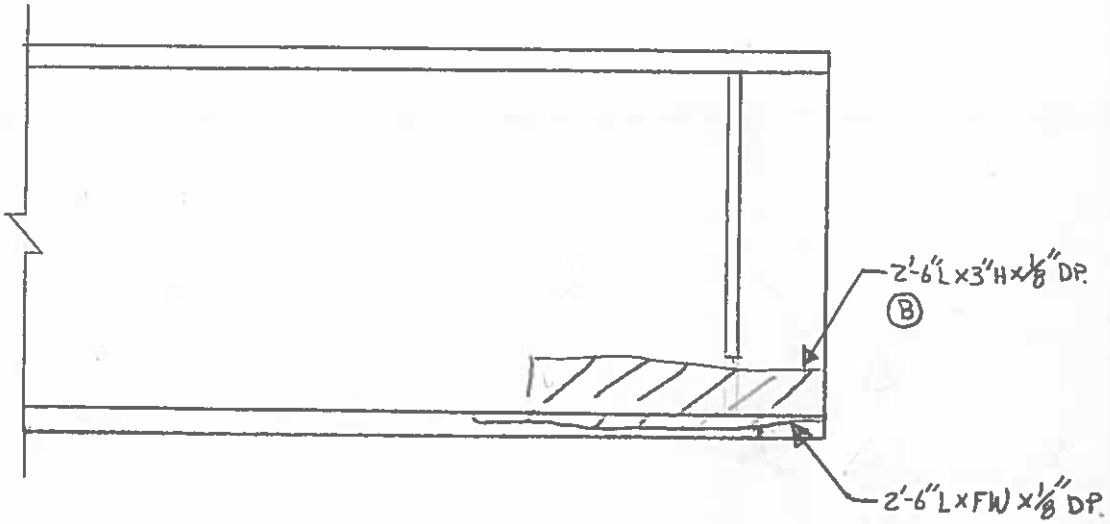

SPAN H, BEAM 3
EAST ELEV. AT P8

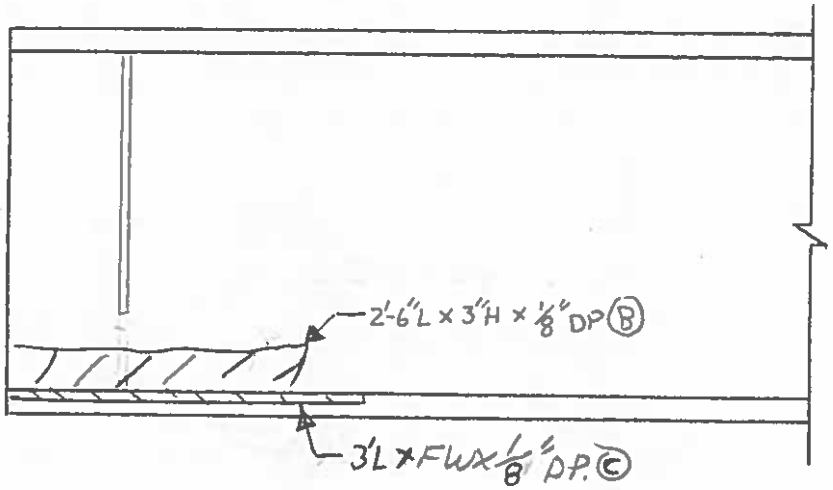

SPAN H, BEAM 3
WEST ELEV. AT P9

REVISION	DATE	CREW	COMPANY	REVISION	DATE	CREW	COMPANY
1				3			
2				4			

Dewberry®	FIELD NOTES	JOB NO.	BRIDGE NO: 03014 A
59 Elm Street, Suite 101 New Haven, CT 06510		DATE: 7/10/14	SHEET OF
		CREW: RFP, PHH	

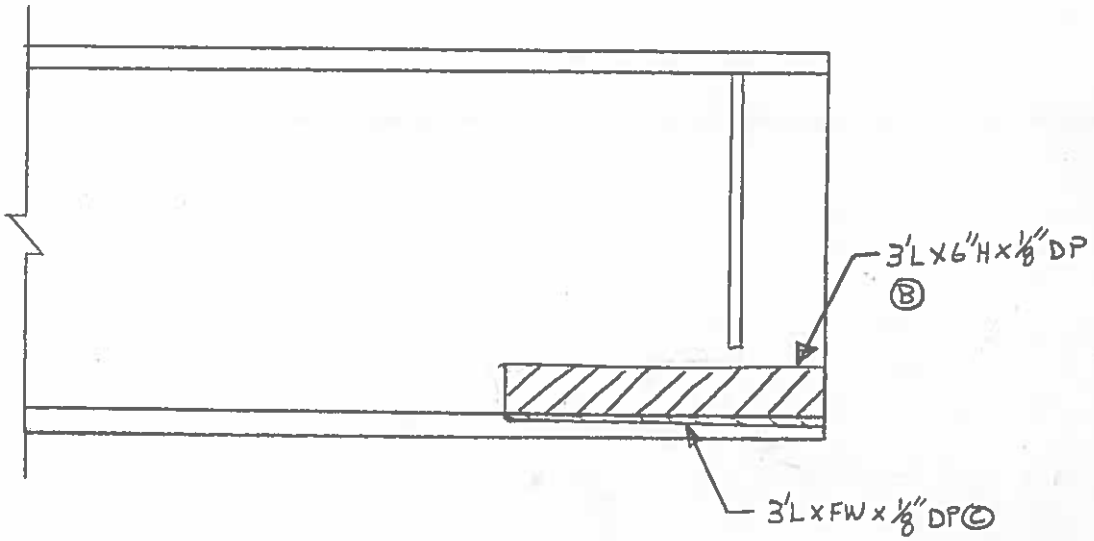

SPAN H, BEAM 4
EAST ELEV. AT P8

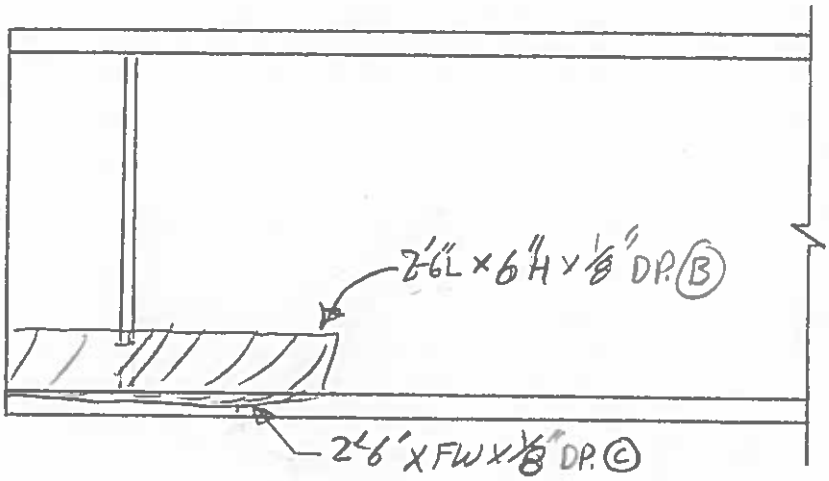

SPAN H, BEAM 4
WEST ELEV. AT P8

REVISION	DATE	CREW	COMPANY	REVISION	DATE	CREW	COMPANY
1				3			
2				4			

Dewberry® 59 Elm Street, Suite 101 New Haven, CT 06510	FIELD NOTES	JOB NO.	BRIDGE NO: 03014 A
		DATE: 7/10/14	SHEET OF
		CREW: RFP, PHH	

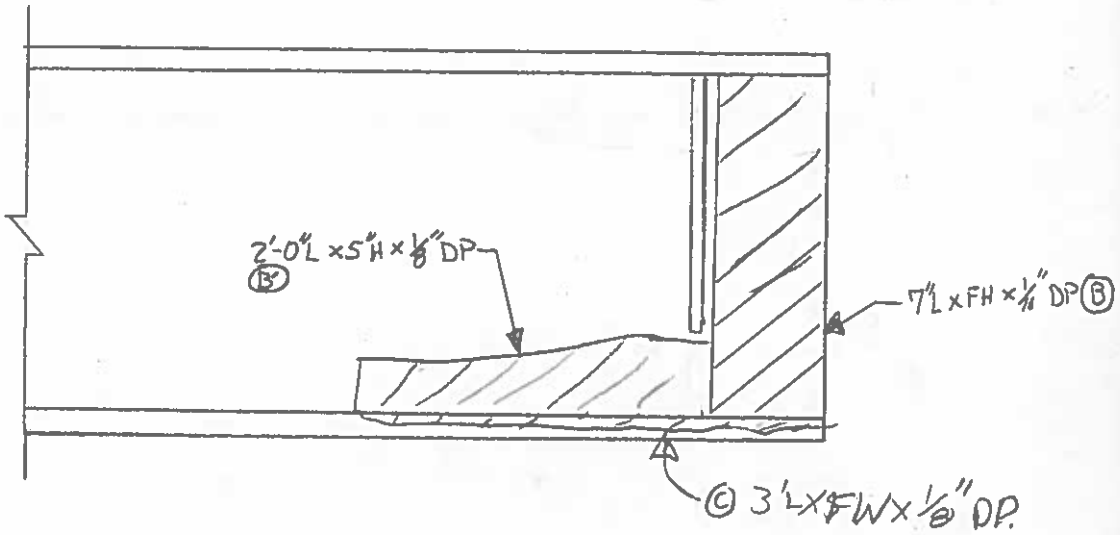

SPAN H, BEAM 5
EAST ELEV. AT P8

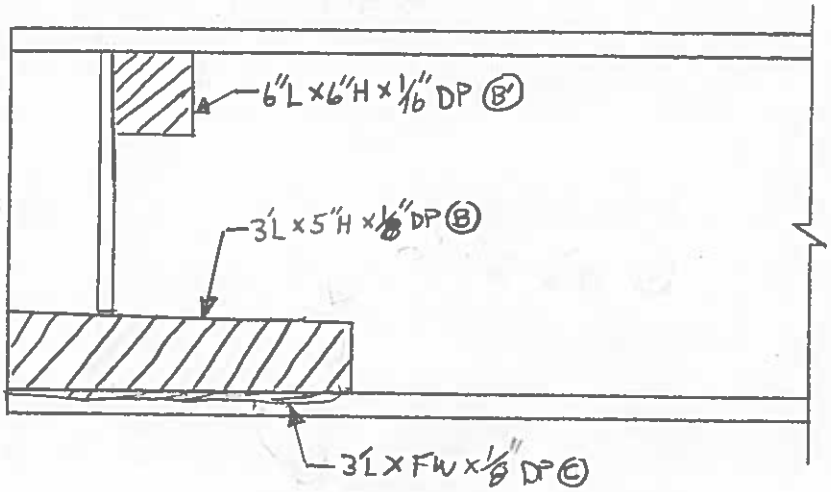

SPAN H, BEAM 5
WEST ELEV. AT P8

REVISION 1	DATE	CREW	COMPANY	REVISION 3	DATE	CREW	COMPANY
REVISION 2	DATE	CREW	COMPANY	REVISION 4	DATE	CREW	COMPANY

Dewberry	FIELD NOTES	JOB NO.	BRIDGE NO: 03014 A
59 Elm Street, Suite 101 New Haven, CT 06510		DATE: 7/2/2014	SHEET OF
		CREW: RFP, PHH	

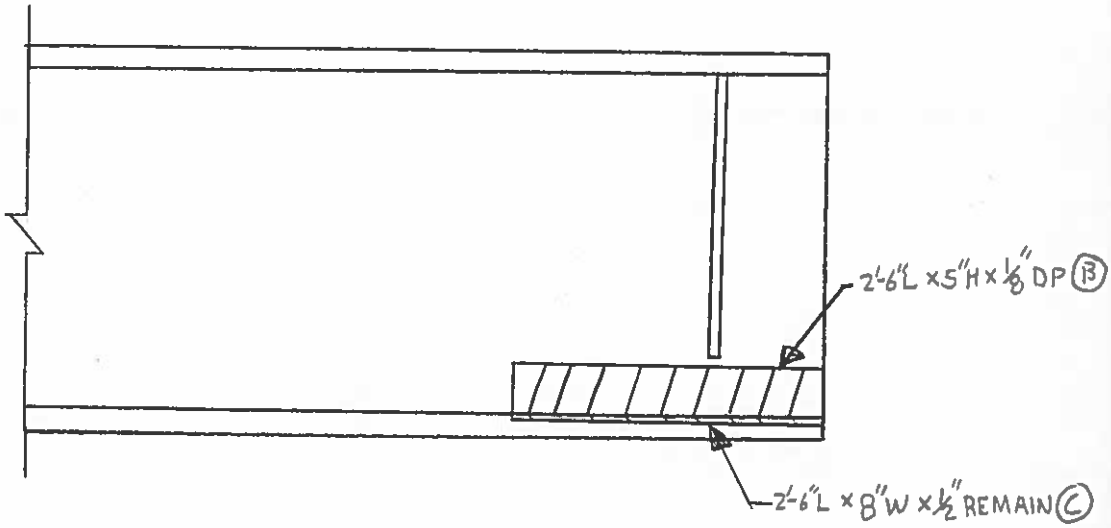

SPAN H, BEAM 6
EAST ELEV. AT P8

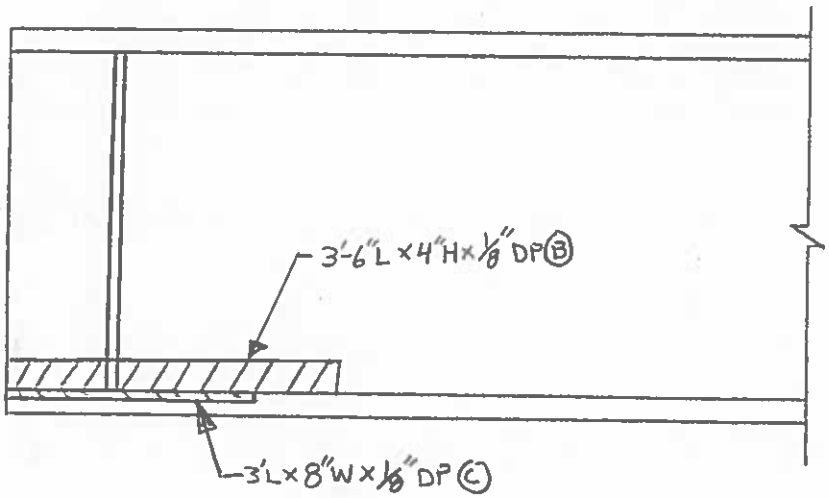

SPAN H, BEAM 6
WEST ELEV. AT P8

REVISION	DATE	CREW	COMPANY	REVISION	DATE	CREW	COMPANY
1				3			
2				4			

Dewberry
59 Elm Street, Suite 101
New Haven, CT 06510

FIELD NOTES

JOB NO.

BRIDGE NO: 03014 A

DATE: 7/2/2014

SHEET OF

CREW: RFP, PHH

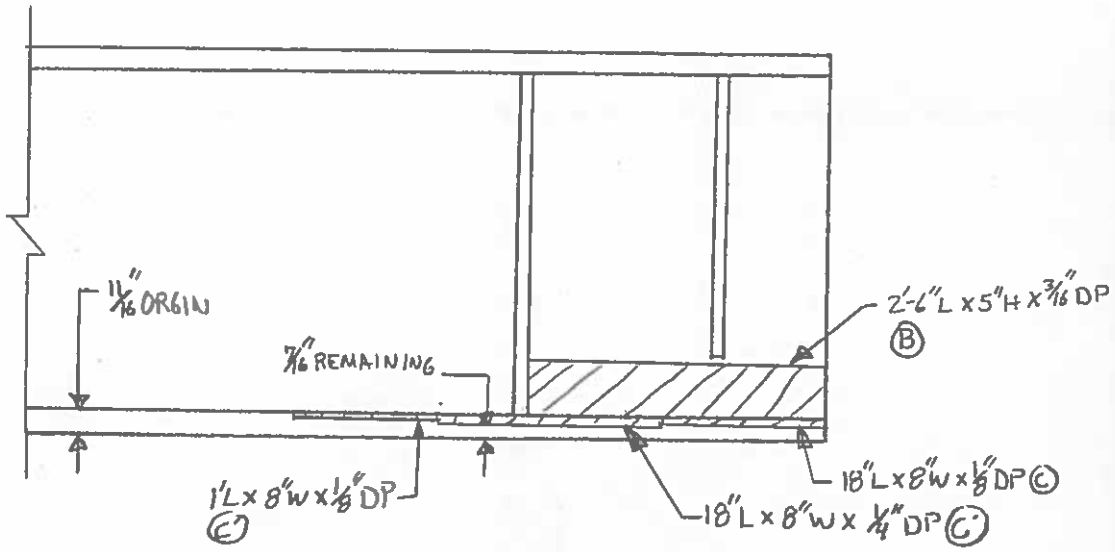

SPAN H, BEAM 7
EAST ELEV. AT P8

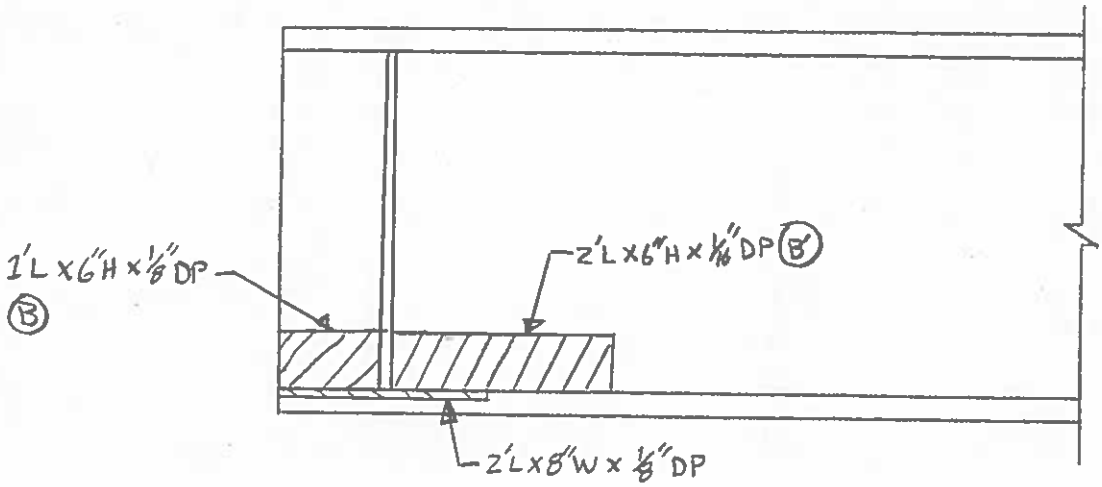

SPAN H, BEAM 7
WEST ELEV. AT P8

REVISION	DATE	CREW	COMPANY	REVISION	DATE	CREW	COMPANY
1				3			
2				4			

Dewberry	FIELD NOTES	JOB NO.	BRIDGE NO: 03014 A
59 Elm Street, Suite 101 New Haven, CT 06510		DATE: 7/2/2014	SHEET OF
		CREW: RFP, PHH	

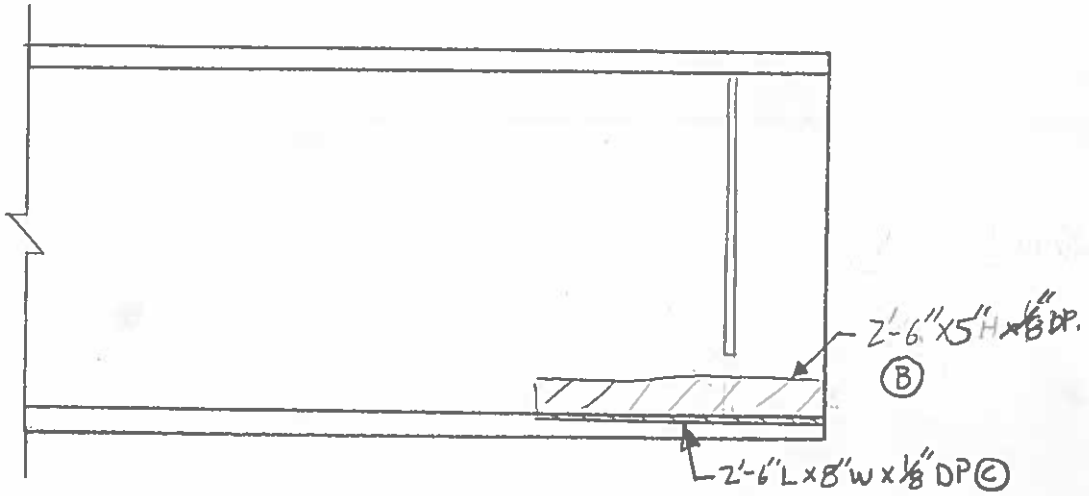

SPAN H, BEAM 8
EAST ELEV. AT P8

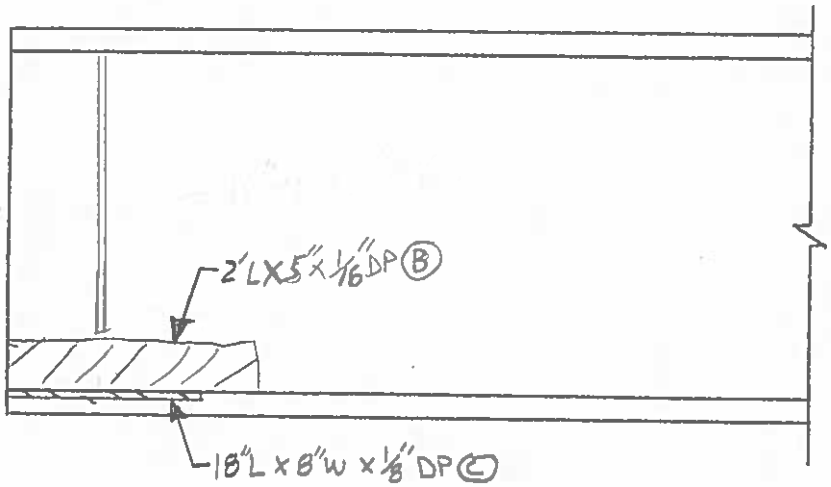

SPAN H, BEAM 8
WEST ELEV. AT P8

REVISION	DATE	CREW	COMPANY	REVISION	DATE	CREW	COMPANY
1				3			
2				4			

Dewberry
59 Elm Street, Suite 101
New Haven, CT 06510

FIELD NOTES

JOB NO.

BRIDGE NO: 03014A

DATE: 7/21/2014

SHEET OF

CREW: RFP, PHH

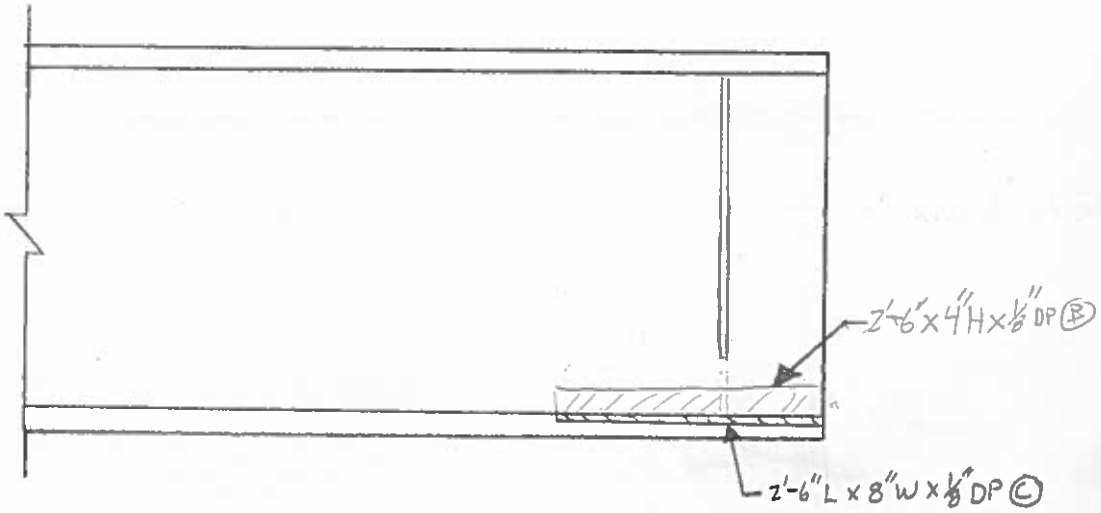

SPAN H, BEAM 9
EAST ELEV. AT P8

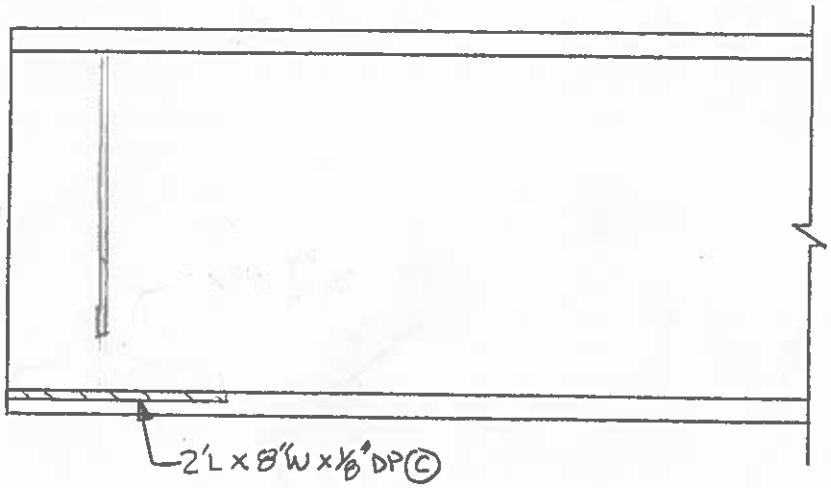

SPAN H, BEAM 9
WEST ELEV. AT P8

REVISION	DATE	CREW	COMPANY	REVISION	DATE	CREW	COMPANY
1				3			
2				4			

Dewberry
59 Elm Street, Suite 101
New Haven, CT 06510

FIELD NOTES

JOB NO.

BRIDGE NO: 03014 A

DATE: 7/2/2014

SHEET OF

CREW: RFP, PHH

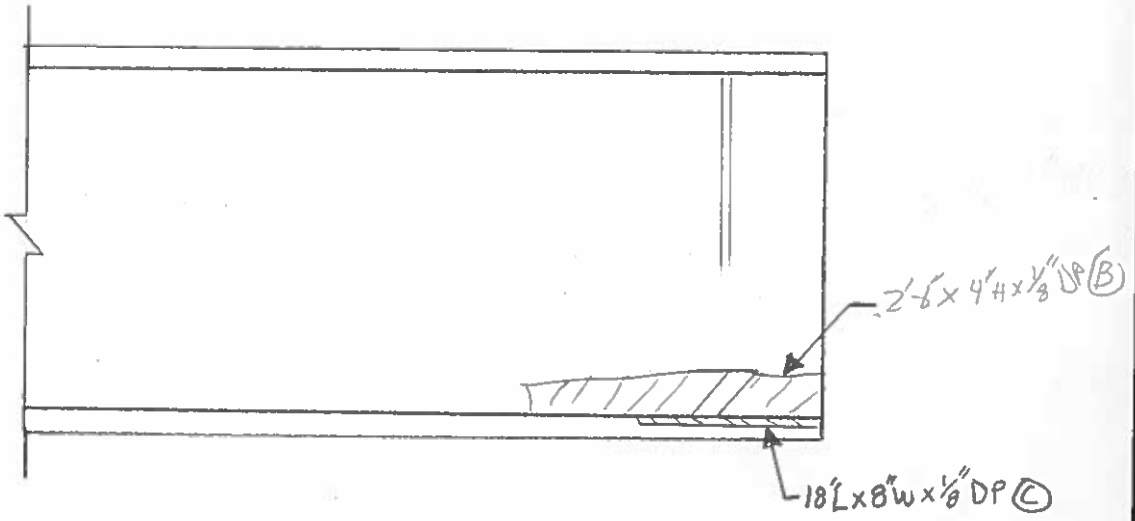

SPAN H, BEAM 10
EAST ELEV. AT P8

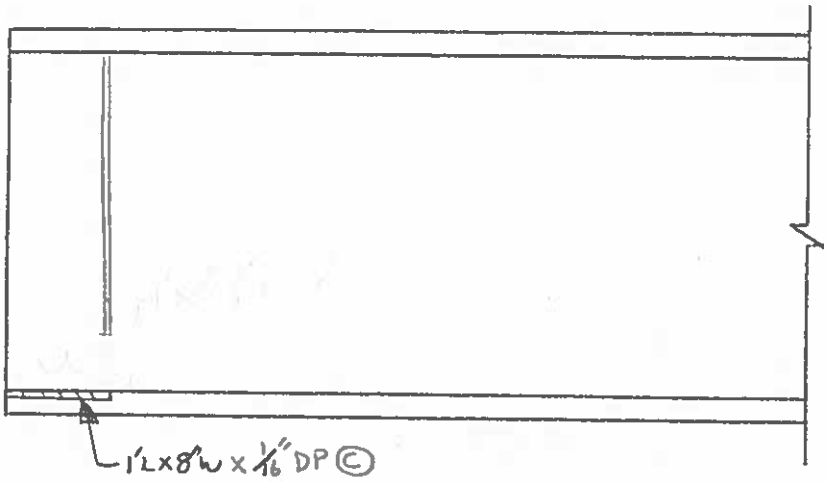

SPAN H, BEAM 10
WEST ELEV. AT P8

REVISION	DATE	CREW	COMPANY	REVISION	DATE	CREW	COMPANY
1				3			
2				4			

Dewberry®	FIELD NOTES	JOB NO.	BRIDGE NO: 03014 A
59 Elm Street, Suite 101 New Haven, CT 06510		DATE: 7/2/2014	SHEET OF
		CREW: RFP, PHH	

• WEB BOWED 3/8" EAST OVER 2'

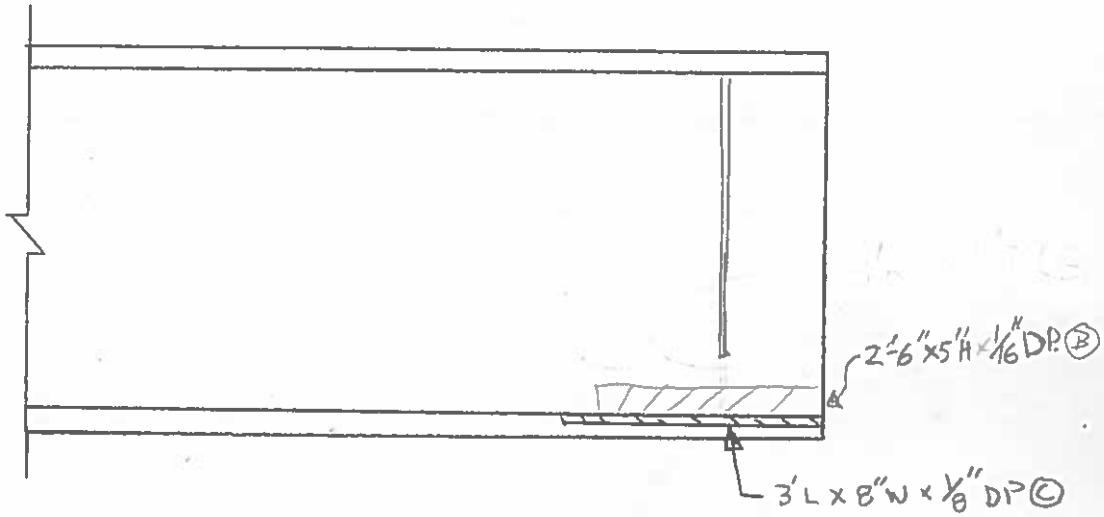

SPAN H, BEAM 11
EAST ELEV. AT P8

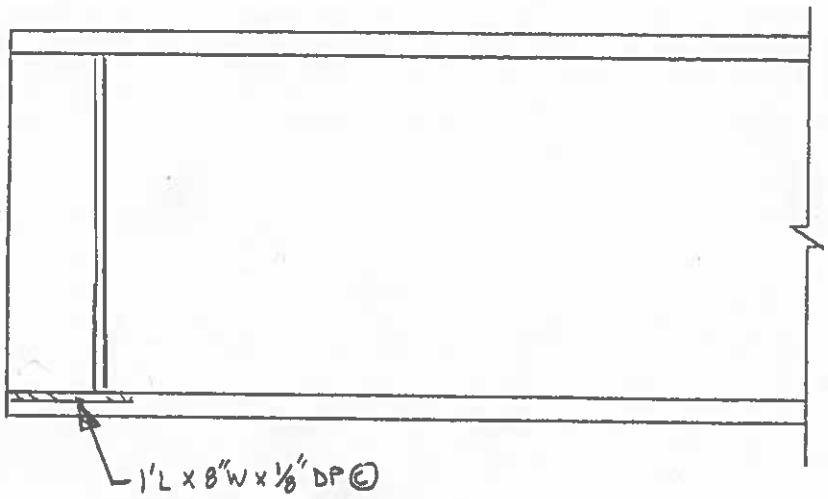

SPAN H, BEAM 11
WEST ELEV. AT P8

REVISION	DATE	CREW	COMPANY	REVISION	DATE	CREW	COMPANY
1				3			
2				4			

Dewberry
59 Elm Street, Suite 101
New Haven, CT 06510

FIELD NOTES	JOB NO.	BRIDGE NO: 03014 A
	DATE: 7/2/2014	SHEET OF
	CREW: RFP, PHH	

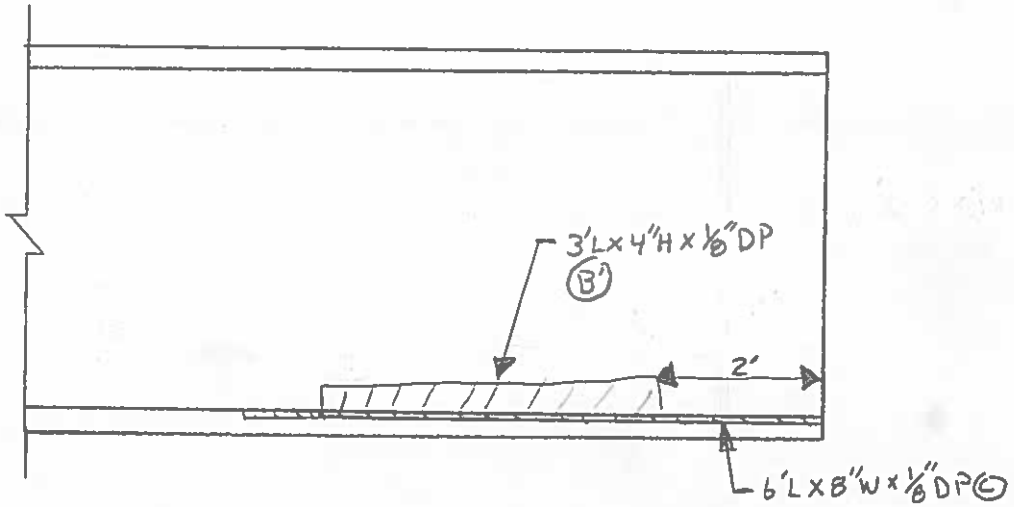

SPAN H, BEAM 12
EAST ELEV. AT P8

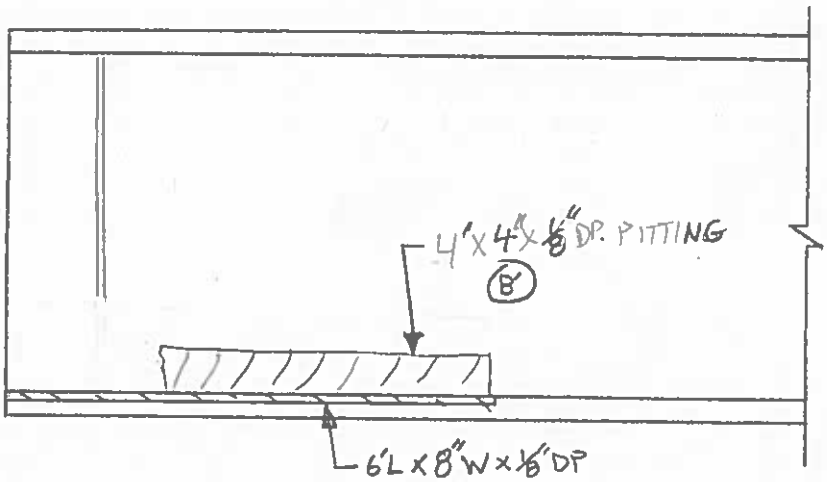

SPAN H, BEAM 12
WEST ELEV. AT P8

REVISION 1	DATE	CREW	COMPANY	REVISION 3	DATE	CREW	COMPANY
REVISION 2	DATE	CREW	COMPANY	REVISION 4	DATE	CREW	COMPANY

SPAN I

FIELD NOTES

PREPARED BY: Garg Consulting Services, Inc. ENGINEERS • CONSULTANTS • CONSTRUCTION MANAGERS	PROJ. NO. 170-3013	BRIDGE NO. 3014A
	DATE: 11/11/2010	SHEET 51 52
	CREW: PDG, DLC, MD	

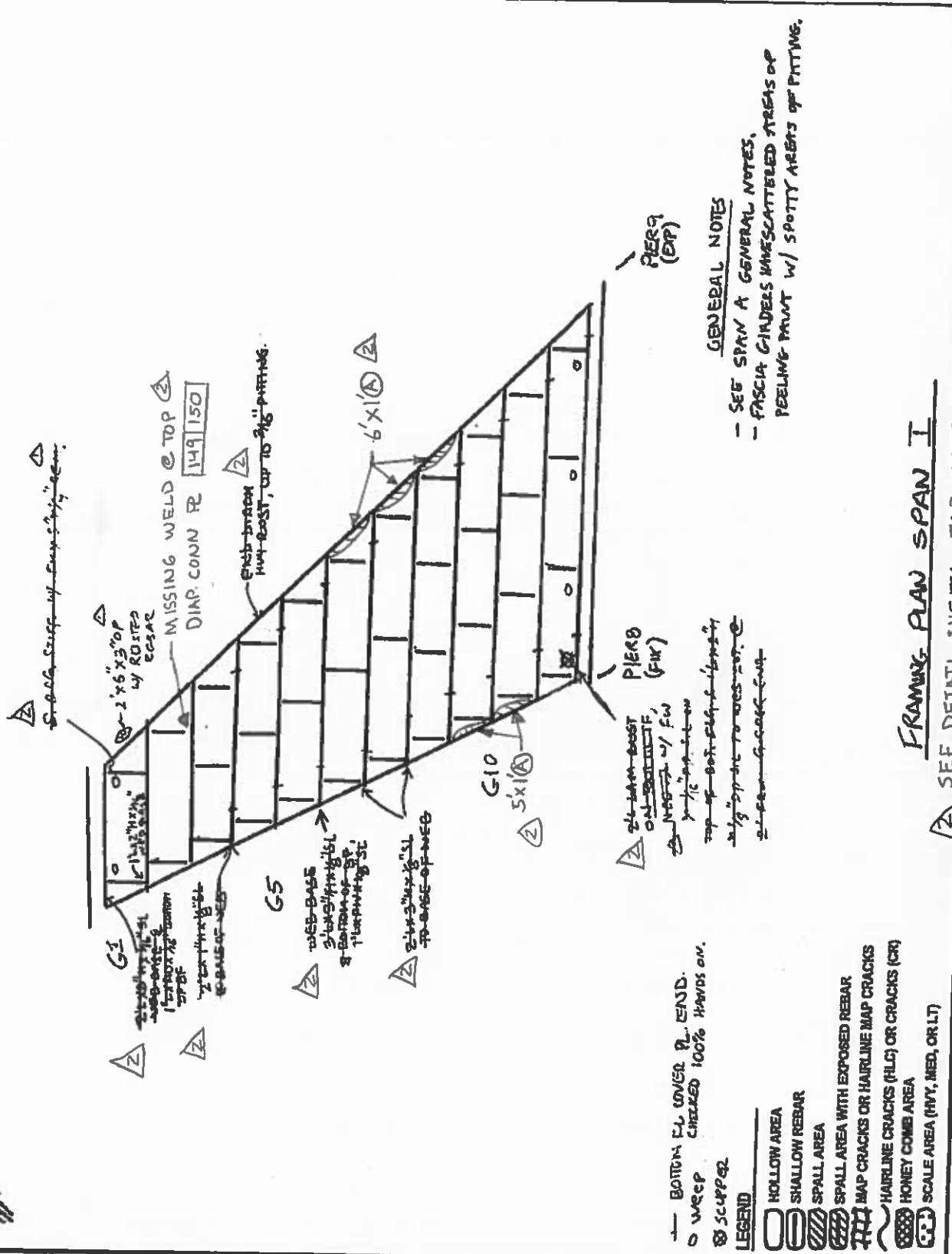

Revision	Date	Crew	Company	Revision	Date	Crew	Company
1	3/5/12	PKG, DLC	GM2				
2	7/2/14 & 7/10/14	RFP, PHH	DEW				

Dewberry
59 Elm Street, Suite 101
New Haven, CT 06510

FIELD NOTES	JOB NO.	BRIDGE NO: 03014 A
	DATE: 7/10/14	SHEET OF
	CREW: RFP, PHH	

- WEB BOWED ¼" WEST OVER FH

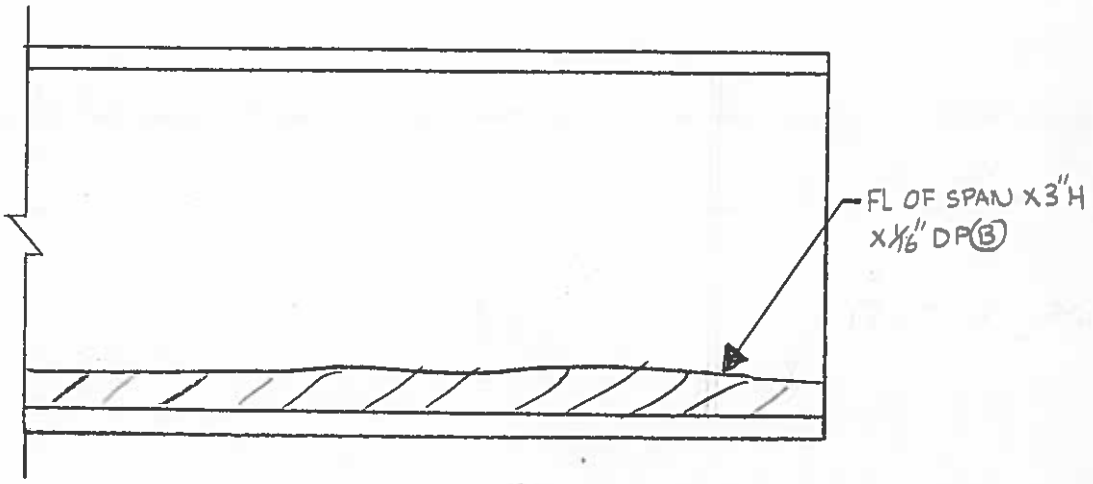

SPAN I, BEAM 1
WEST ELEV. AT P8

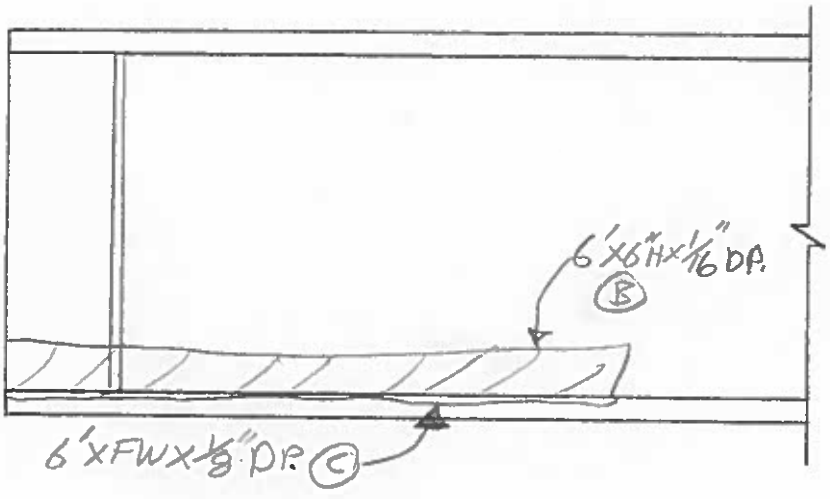

SPAN I, BEAM 1
EAST ELEV. AT P8

REVISION 1	DATE	CREW	COMPANY	REVISION 3	DATE	CREW	COMPANY
REVISION 2	DATE	CREW	COMPANY	REVISION 4	DATE	CREW	COMPANY

Dewberry
59 Elm Street, Suite 101
New Haven, CT 06510

FIELD NOTES

JOB NO.

BRIDGE NO: 03014A

DATE: 7/10/14

SHEET OF

CREW: RFP, PHH

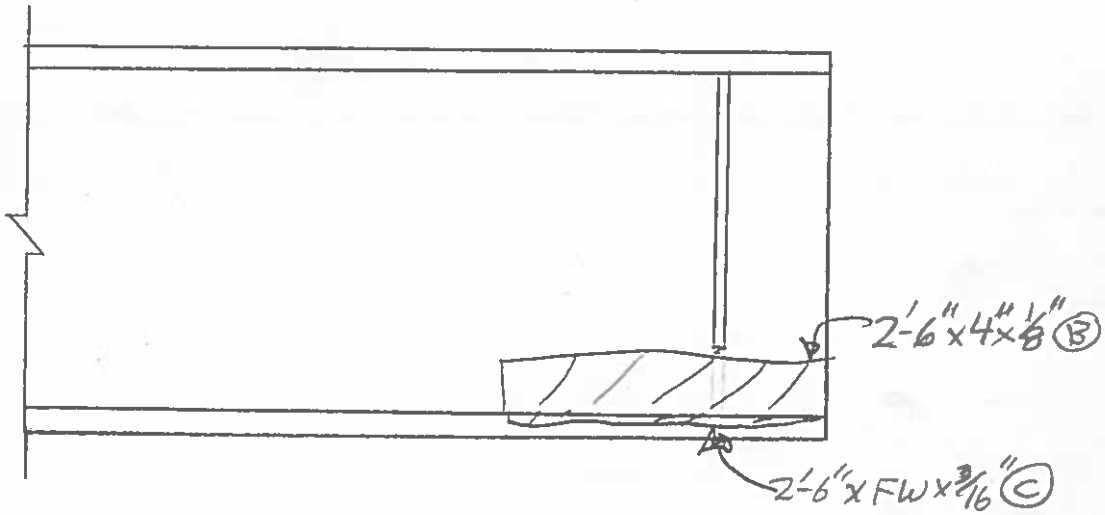

SPAN I, BEAM 2
WEST ELEV. AT P8

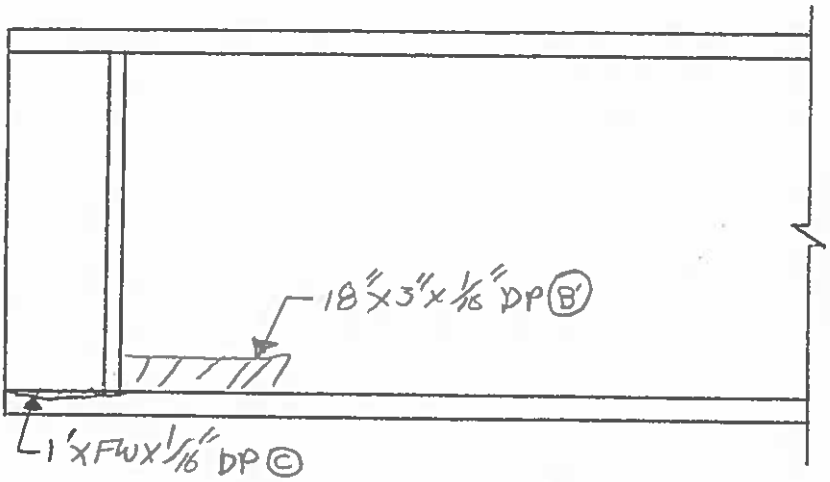

SPAN I, BEAM 2
EAST ELEV. AT P8

REVISION	DATE	CREW	COMPANY	REVISION	DATE	CREW	COMPANY
1				3			
2				4			

Dewberry
59 Elm Street, Suite 101
New Haven, CT 06510

FIELD NOTES

JOB NO.

BRIDGE NO: 03014A

DATE: 7/10/14

SHEET OF

CREW: RFP, PHH

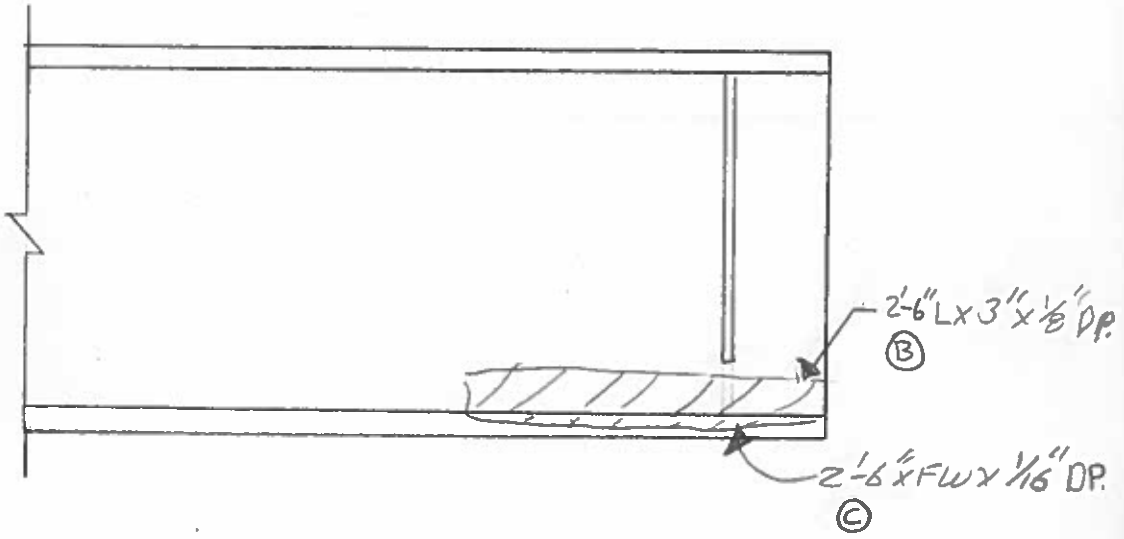

SPAN I, BEAM 3
WEST ELEV. AT P8

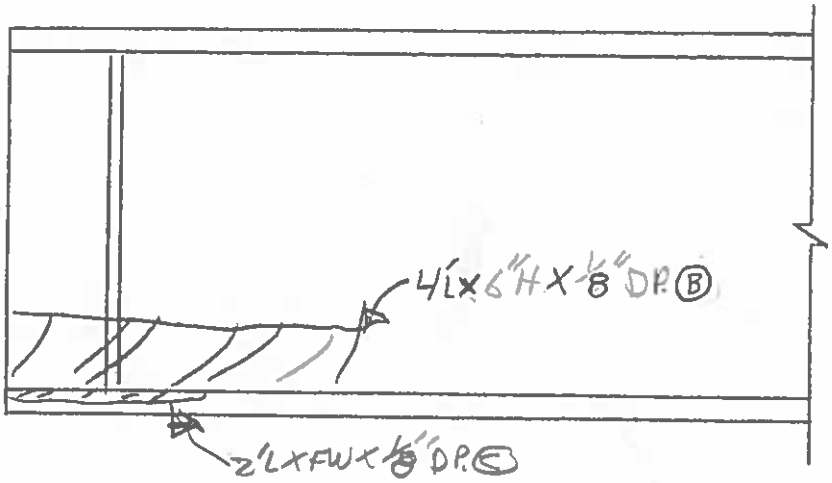

SPAN I, BEAM 3
EAST ELEV. AT P8

REVISION	DATE	CREW	COMPANY	REVISION	DATE	CREW	COMPANY
1				3			
2				4			

Dewberry
59 Elm Street, Suite 101
New Haven, CT 06510

FIELD NOTES

JOB NO.

BRIDGE NO: 03014 A

DATE: 7/10/14

SHEET OF

CREW: RFP, PHH

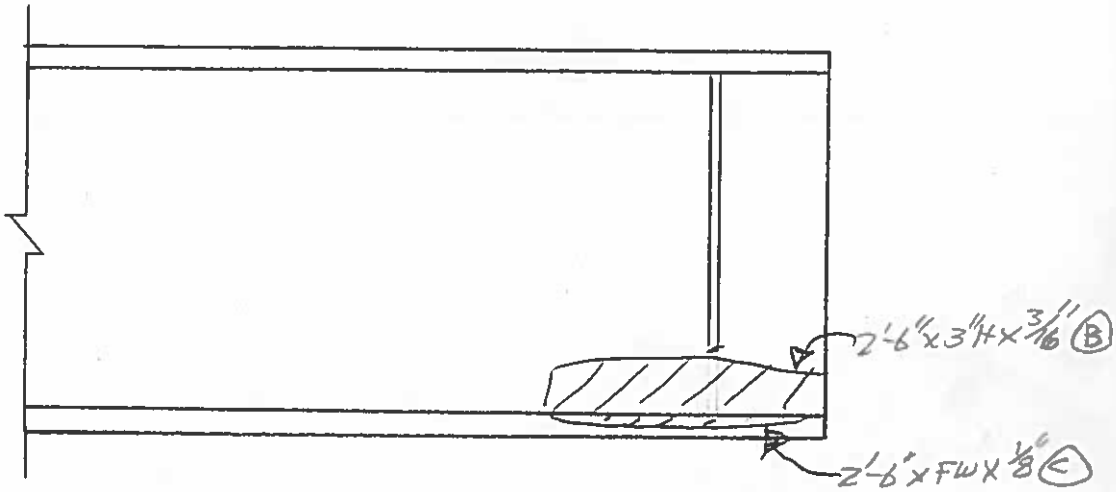

SPAN I, BEAM 4
WEST ELEV. AT P8

• SEE INSPECTION PHOTOS 145, 146, AND 147

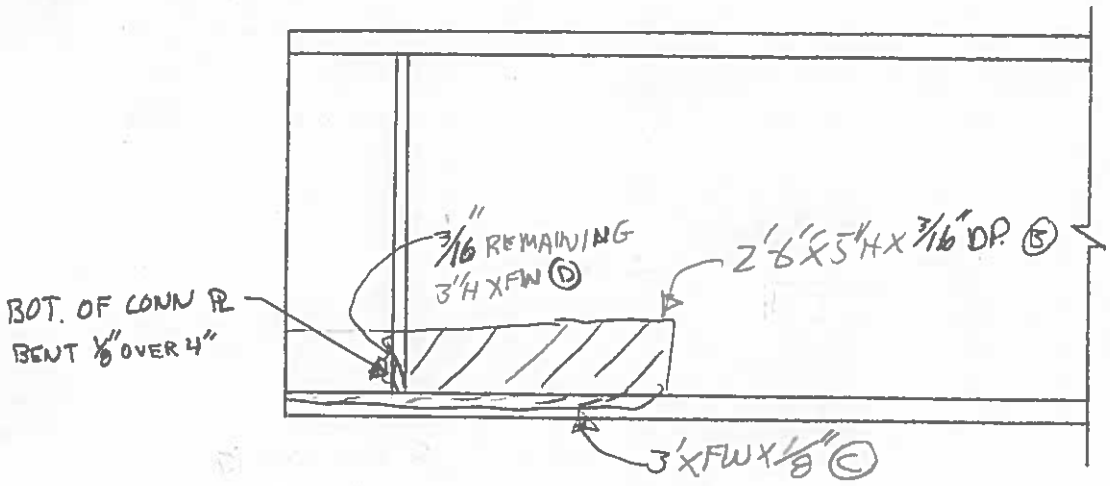

SPAN I, BEAM 4
EAST ELEV. AT P8

REVISION	DATE	CREW	COMPANY	REVISION	DATE	CREW	COMPANY
1				3			
2				4			

Dewberry®	FIELD NOTES	JOB NO.	BRIDGE NO: 03014 A
59 Elm Street, Suite 101 New Haven, CT 06510		DATE: 7/10/14	SHEET OF
		CREW: RFP, PHH	

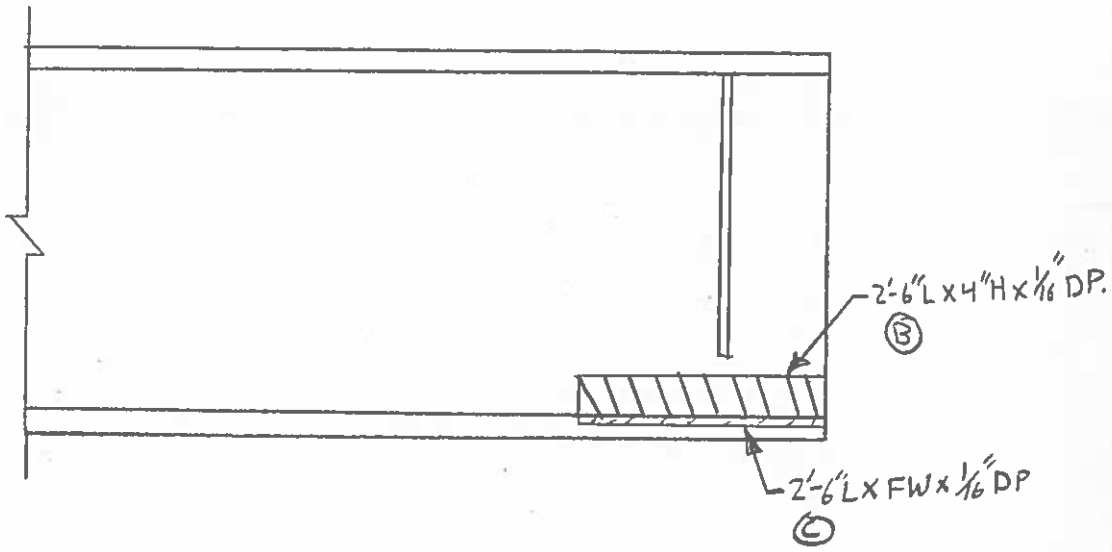

SPAN I, BEAM 5
WEST ELEV. AT P8

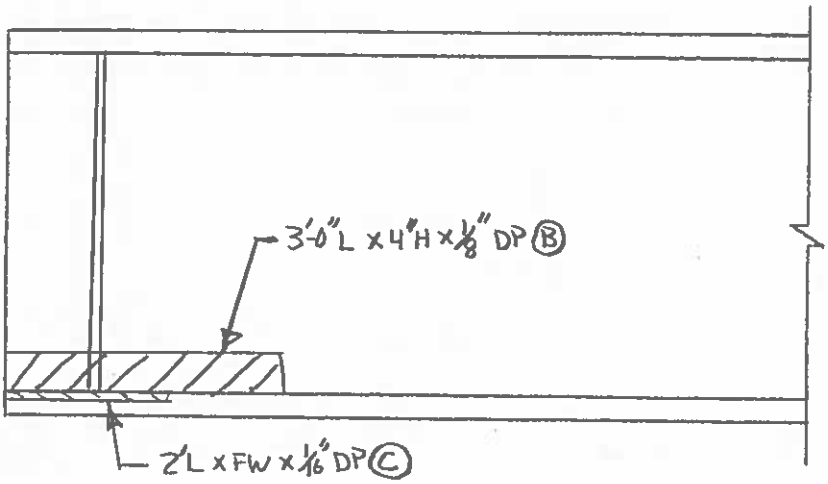

SPAN I, BEAM 5
EAST ELEV. AT P8

REVISION 1	DATE	CREW	COMPANY	REVISION 3	DATE	CREW	COMPANY
REVISION 2	DATE	CREW	COMPANY	REVISION 4	DATE	CREW	COMPANY

Dewberry	FIELD NOTES	JOB NO.	BRIDGE NO: 03014 A
59 Elm Street, Suite 101 New Haven, CT 06510		DATE: 7/10/14	SHEET OF
		CREW: RFP, PHH	

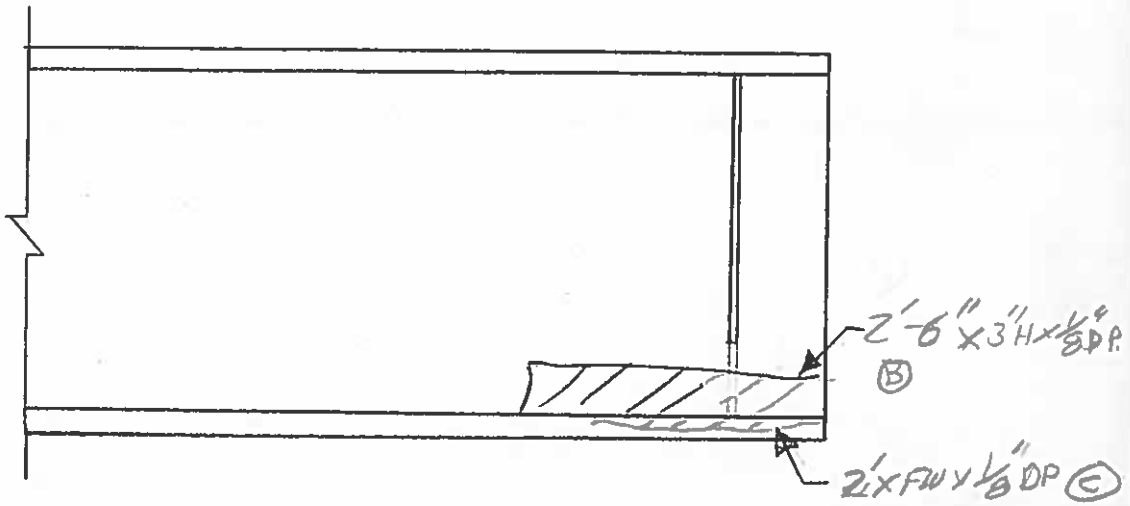

SPAN I, BEAM 6
WEST ELEV. AT P8

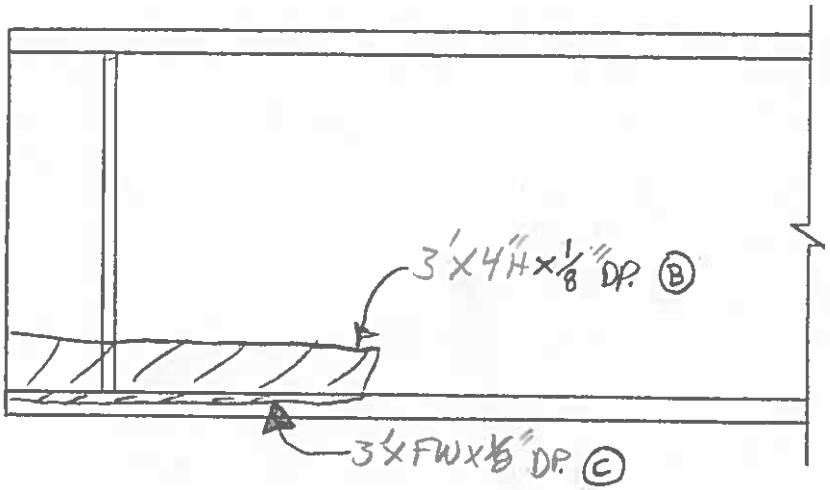

SPAN I, BEAM 6
EAST ELEV. AT P8

REVISION 1	DATE	CREW	COMPANY	REVISION 3	DATE	CREW	COMPANY
REVISION 2	DATE	CREW	COMPANY	REVISION 4	DATE	CREW	COMPANY

Dewberry
59 Elm Street, Suite 101
New Haven, CT 06510

FIELD NOTES

JOB NO.

BRIDGE NO: 03014 A

DATE: 7/2/2014

SHEET OF

CREW: RFP, PHH

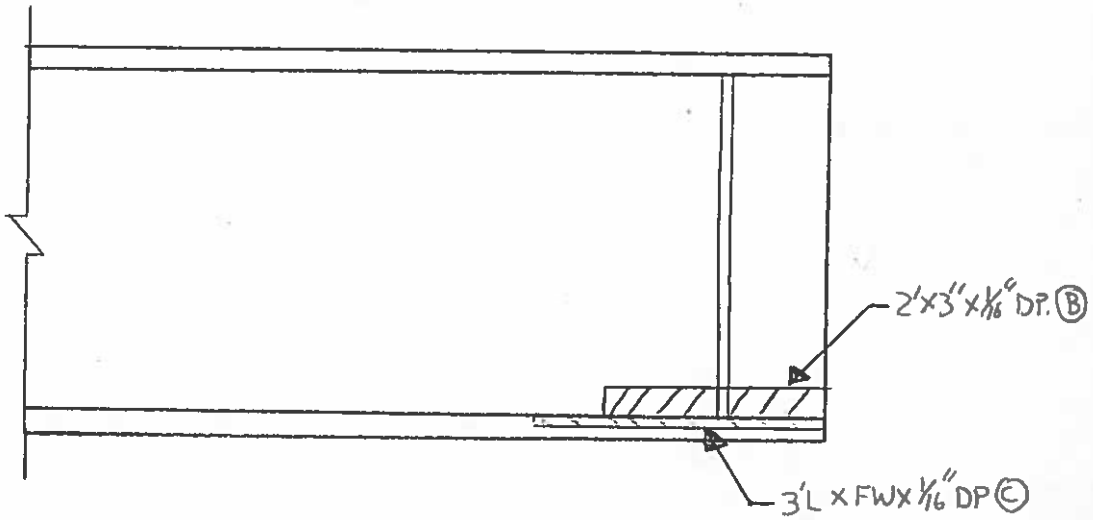

SPAN I, BEAM 7
WEST ELEV. AT P8

• TOP OF WEB TIPPED 3/16" EAST OVER 2'

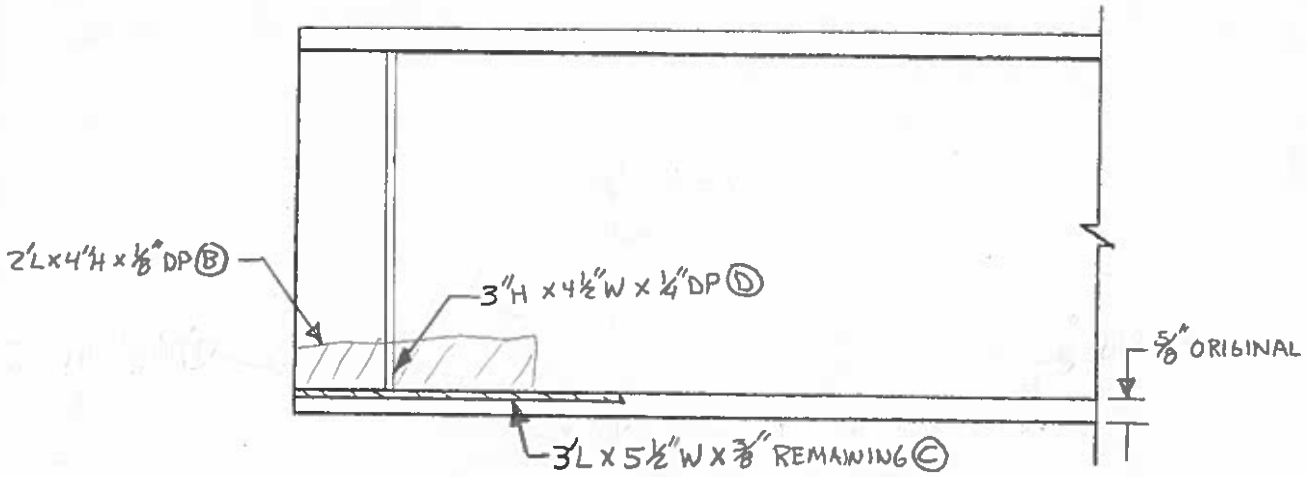

SPAN I, BEAM 7
EAST ELEV. AT P8

REVISION	DATE	CREW	COMPANY	REVISION	DATE	CREW	COMPANY
1				3			
2				4			

Dewberry®	FIELD NOTES	JOB NO.	BRIDGE NO: 03014 A
59 Elm Street, Suite 101 New Haven, CT 06510		DATE: 7/2/14	SHEET OF
		CREW: RFP, PHH	

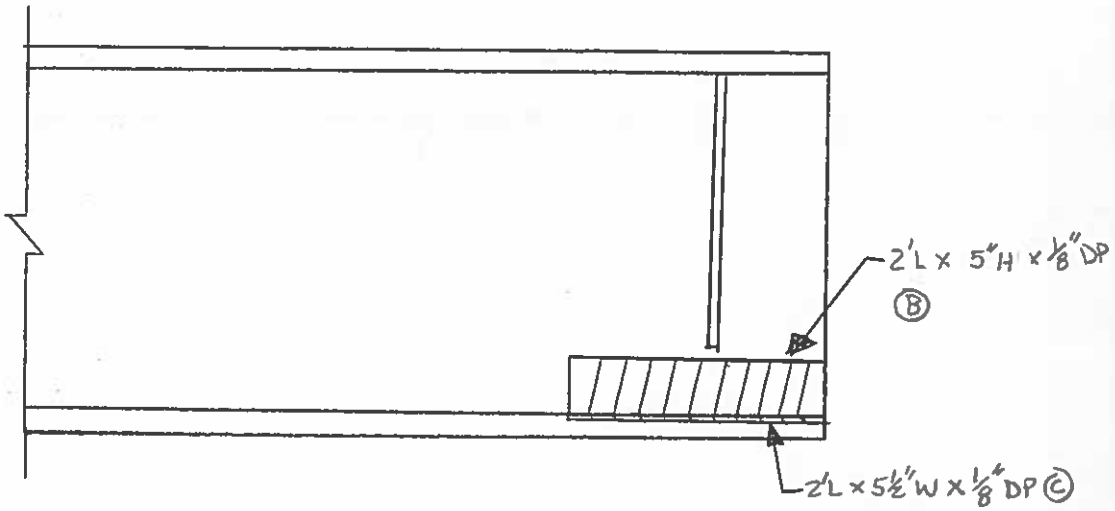

SPAN I, BEAM G8
WEST ELEV. AT P8

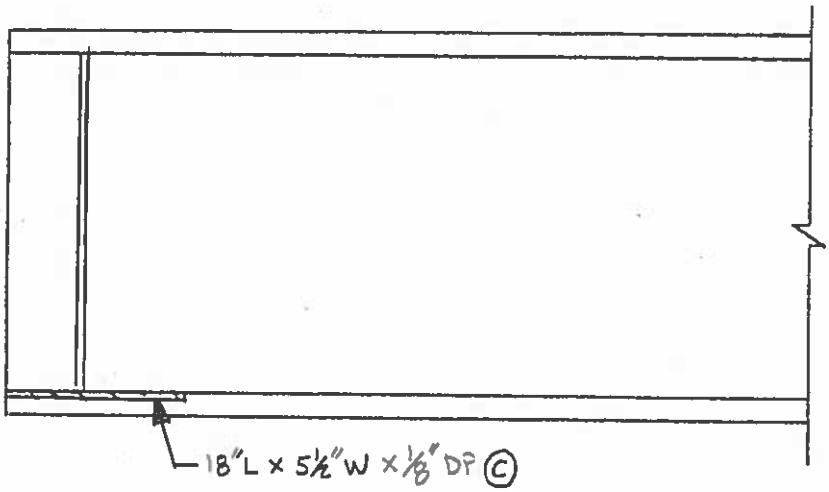

SPAN I, BEAM G8
EAST ELEV. AT P8

REVISION	DATE	CREW	COMPANY	REVISION	DATE	CREW	COMPANY
1				3			
2				4			

Dewberry	FIELD NOTES	JOB NO.	BRIDGE NO: 03014 A
59 Elm Street, Suite 101 New Haven, CT 06510		DATE: 7/2/2014	SHEET OF
		CREW: RFP, PHH	

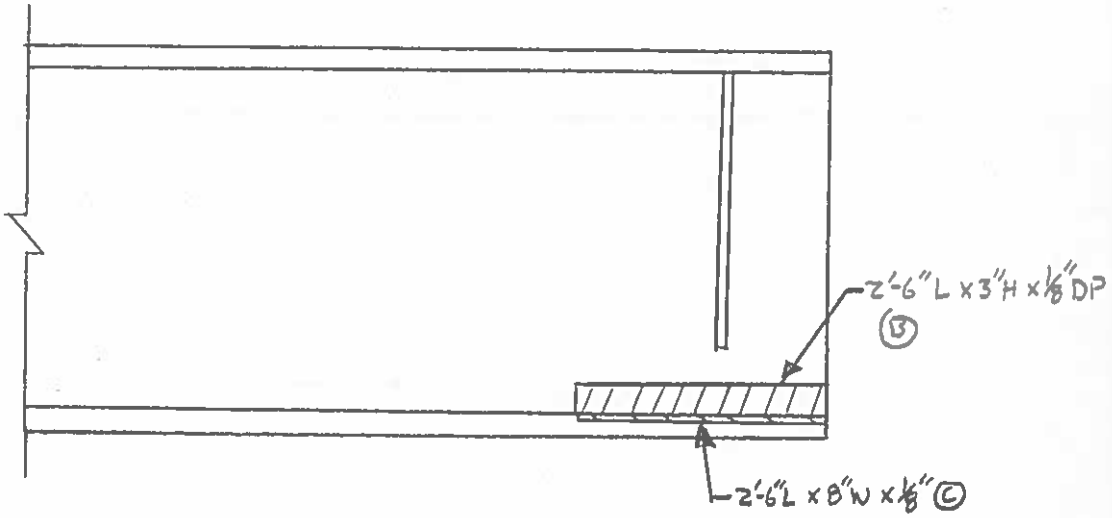

SPAN I, BEAM G9
WEST ELEV. AT P8

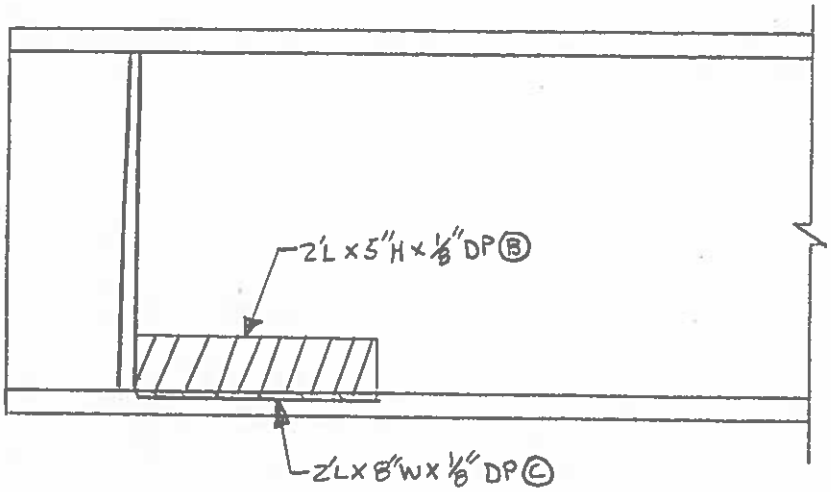

SPAN I, BEAM G9
EAST ELEV. AT P8

REVISION 1	DATE	CREW	COMPANY	REVISION 3	DATE	CREW	COMPANY
REVISION 2	DATE	CREW	COMPANY	REVISION 4	DATE	CREW	COMPANY

Dewberry
59 Elm Street, Suite 101
New Haven, CT 06510

FIELD NOTES

JOB NO.

BRIDGE NO: 03014 A

DATE: 7/2/2014

SHEET OF

CREW: RFP, PHH

• NO SECTION LOSS

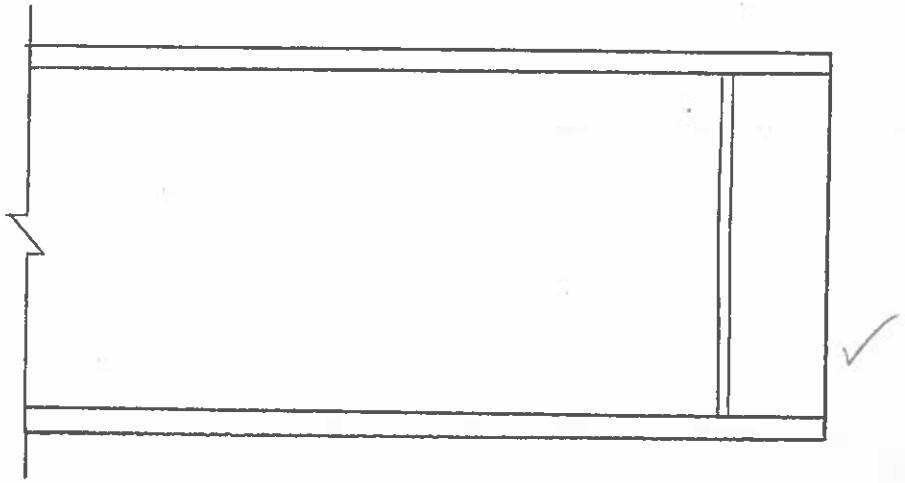

SPAN I, BEAM 10
WEST ELEV. AT P8

• TOP WEB TIPPED 3/16" EAST OVER 2'

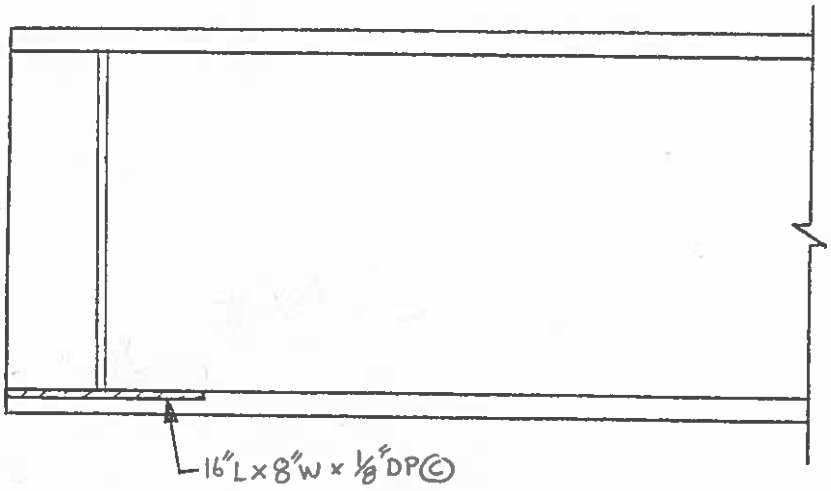

SPAN I, BEAM 10
EAST ELEV. AT P8

REVISION 1	DATE	CREW	COMPANY	REVISION 3	DATE	CREW	COMPANY
REVISION 2	DATE	CREW	COMPANY	REVISION 4	DATE	CREW	COMPANY

Dewberry	FIELD NOTES	JOB NO.	BRIDGE NO: 03014 A
59 Elm Street, Suite 101 New Haven, CT 06510		DATE: 7/2/2014	SHEET OF
		CREW: RFP, PHH	

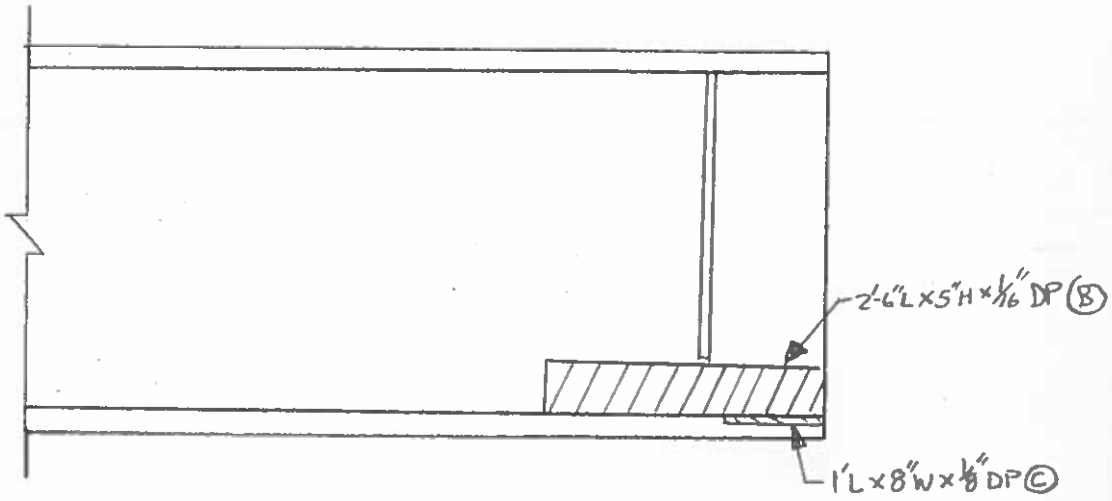

SPAN I, BEAM G11
WEST ELEV. AT P8

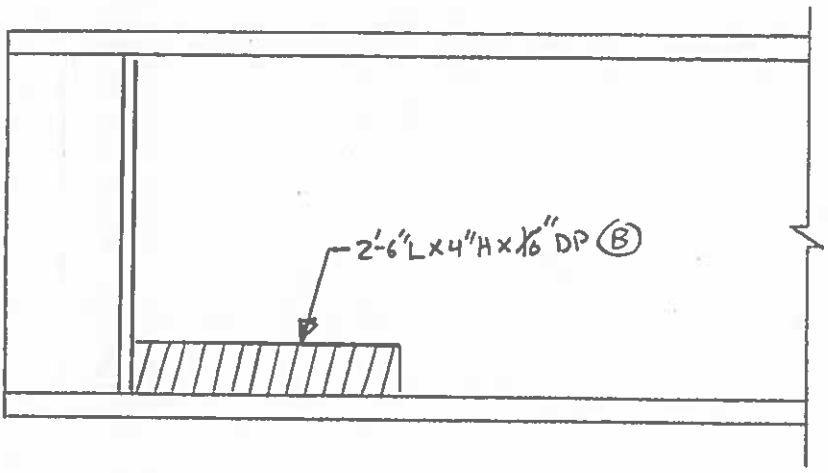

SPAN I, BEAM G11
EAST ELEV. AT P8

REVISION	DATE	CREW	COMPANY	REVISION	DATE	CREW	COMPANY
1				3			
2				4			

Dewberry® 59 Elm Street, Suite 101 New Haven, CT 06510	FIELD NOTES	JOB NO.	BRIDGE NO: 03014 A
		DATE: 7/2/2014	SHEET OF
		CREW: RFP, PHH	

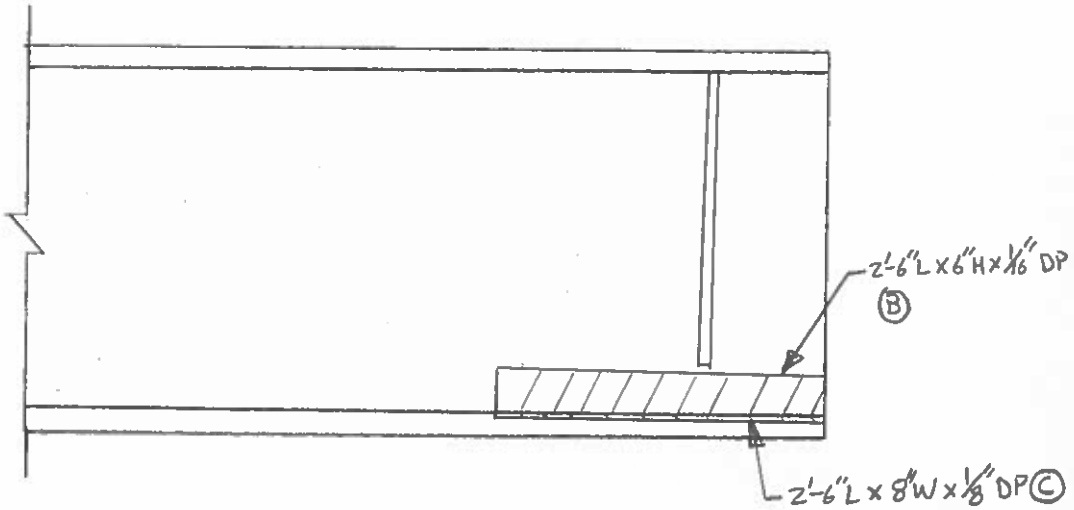

SPAN I, BEAM G12
WEST ELEV. AT P8

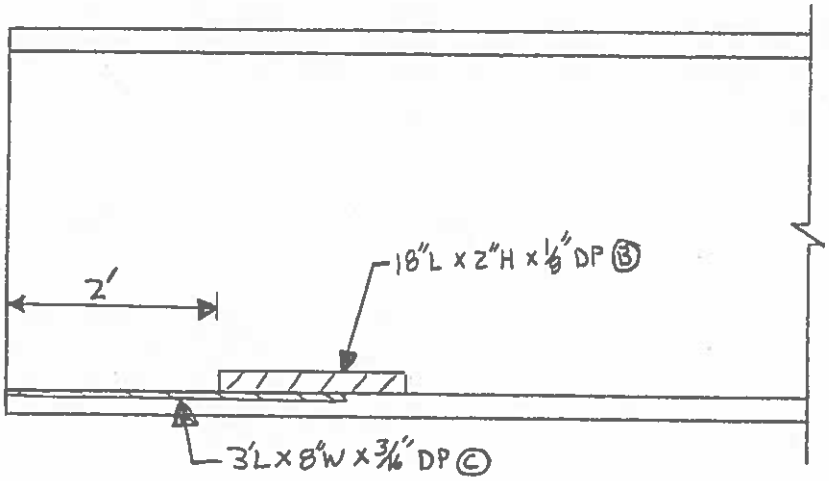

SPAN I, BEAM G12
EAST ELEV. AT P8

REVISION 1	DATE	CREW	COMPANY	REVISION 3	DATE	CREW	COMPANY
REVISION 2	DATE	CREW	COMPANY	REVISION 4	DATE	CREW	COMPANY

Dewberry	FIELD NOTES	JOB NO.	BRIDGE NO: 03014 A
59 Elm Street, Suite 101 New Haven, CT 06510		DATE: 7/10/14	SHEET OF
		CREW: RFP, PHH	

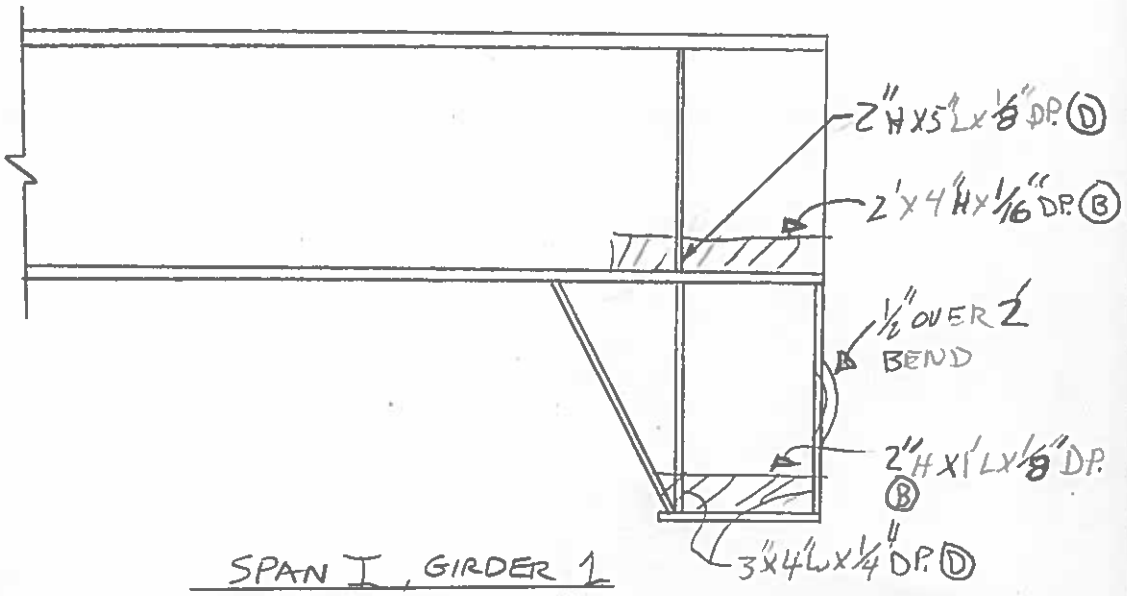

SPAN I, GIRDER 1
EAST ELEV. AT P9

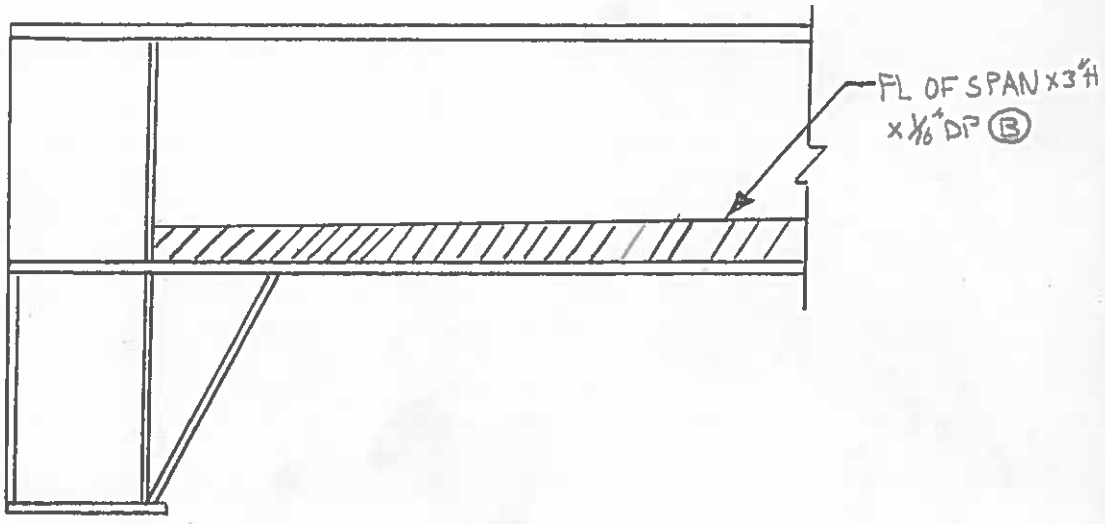

SPAN I, GIRDER 1
WEST ELEV. AT P9

REVISION 1	DATE	CREW	COMPANY	REVISION 3	DATE	CREW	COMPANY
REVISION 2	DATE	CREW	COMPANY	REVISION 4	DATE	CREW	COMPANY

Dewberry

59 Elm Street, Suite 101
New Haven, CT 06510

FIELD NOTES

JOB NO.

BRIDGE NO: 03014 A

DATE: 7/10/14

SHEET OF

CREW: RFP, PHH

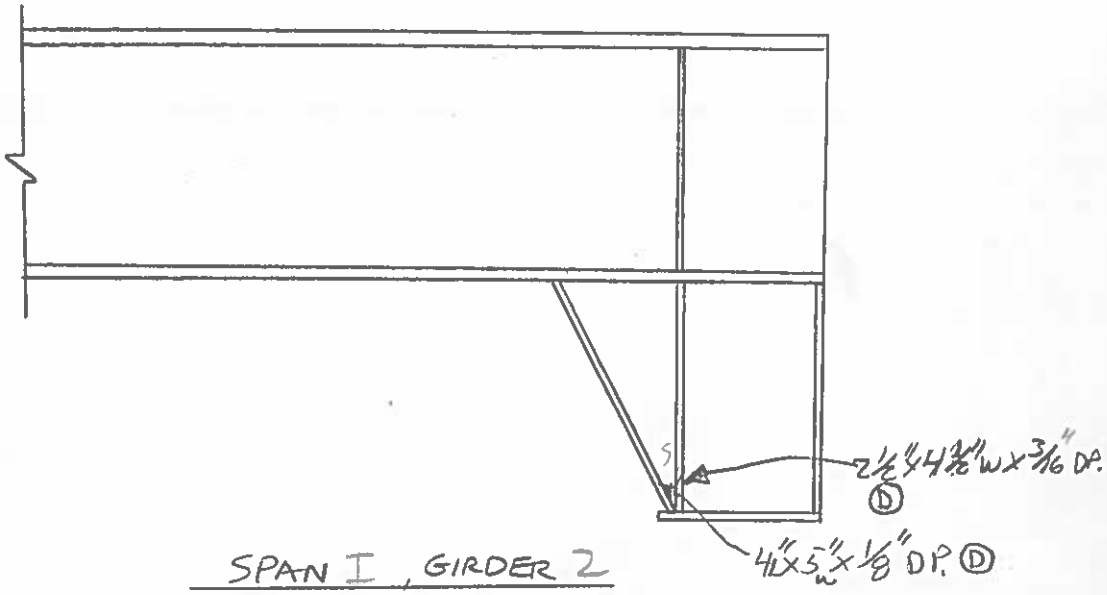

SPAN I, GIRDER 2
EAST ELEV. AT P9

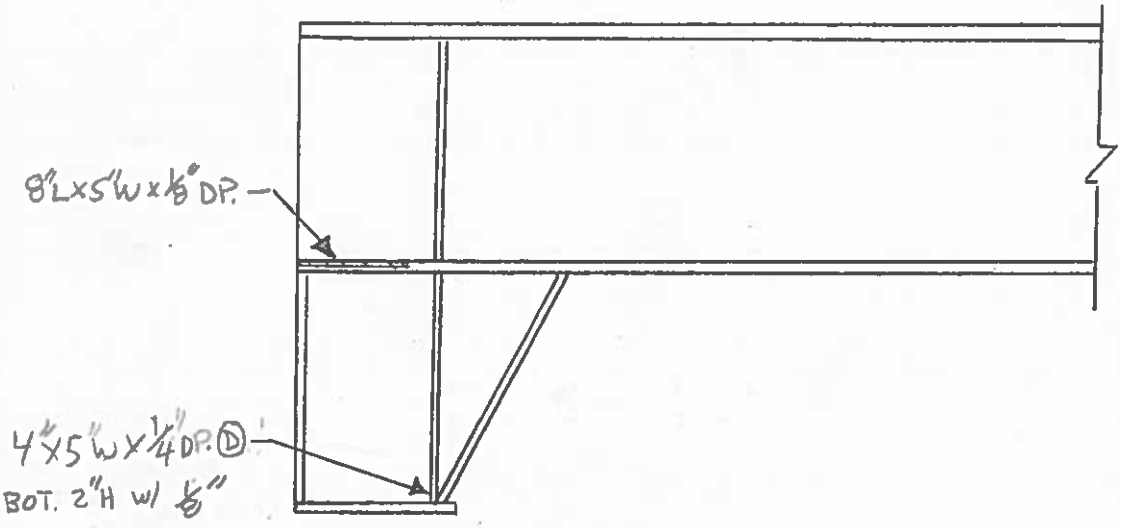

SPAN I, GIRDER 2
WEST ELEV. AT P9

REVISION	DATE	CREW	COMPANY	REVISION	DATE	CREW	COMPANY
1				3			
2				4			

Dewberry
59 Elm Street, Suite 101
New Haven, CT 06510

FIELD NOTES

JOB NO.

BRIDGE NO: 03014 A

DATE: 7/10/14

SHEET OF

CREW: RFP, PHH

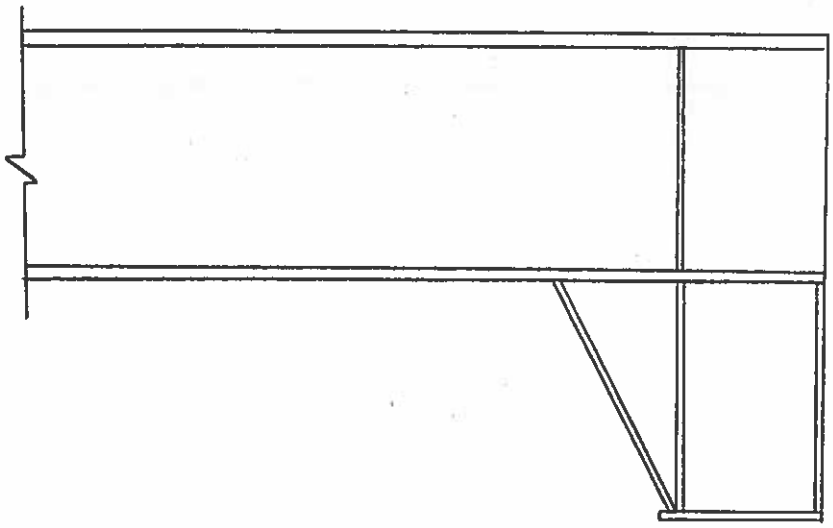

SPAN I, GIRDER G3
EAST ELEV. AT P9

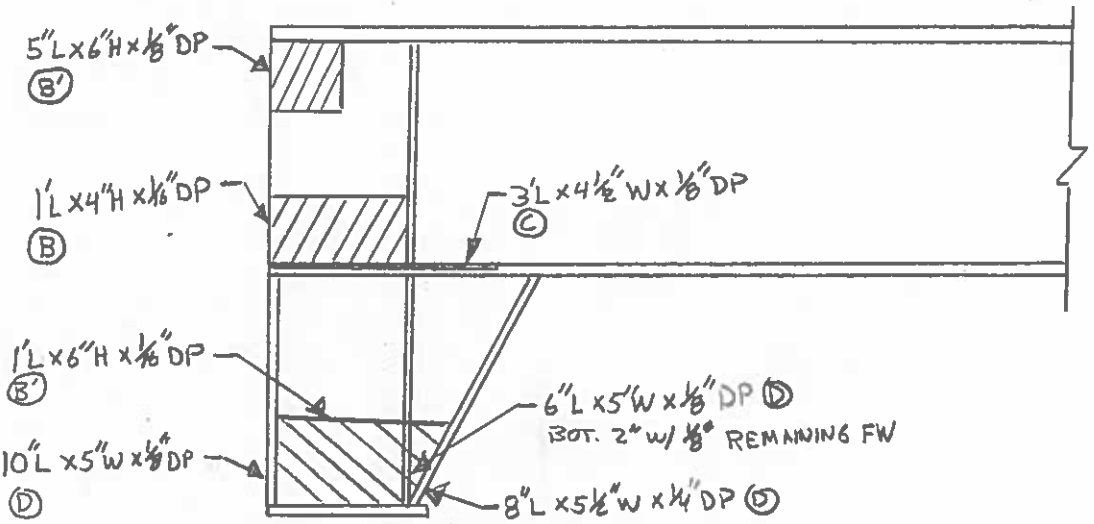

SPAN I, GIRDER G3
WEST ELEV. AT P9

REVISION 1	DATE	CREW	COMPANY	REVISION 3	DATE	CREW	COMPANY
REVISION 2	DATE	CREW	COMPANY	REVISION 4	DATE	CREW	COMPANY

Dewberry® 59 Elm Street, Suite 101 New Haven, CT 06510	FIELD NOTES	JOB NO.	BRIDGE NO: 03014 A
		DATE: 7/10/14	SHEET OF
		CREW: RFP, PHH	

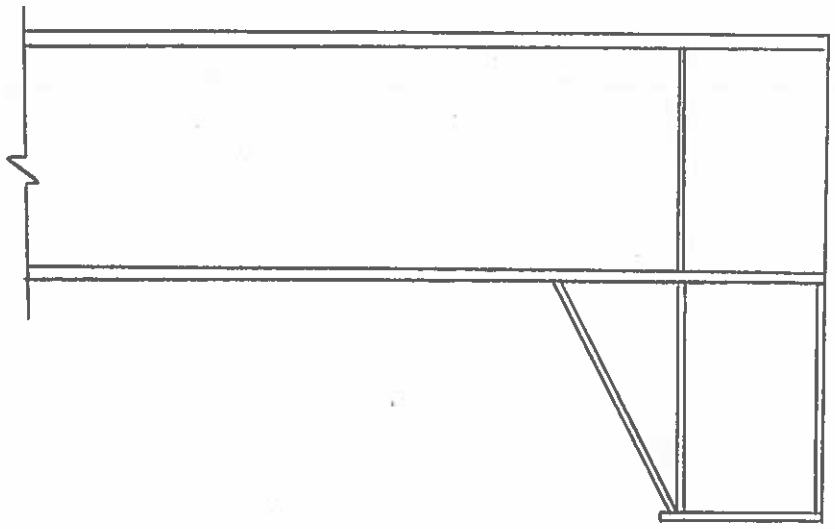

SPAN I, GIRDER G4
EAST ELEV. AT P9

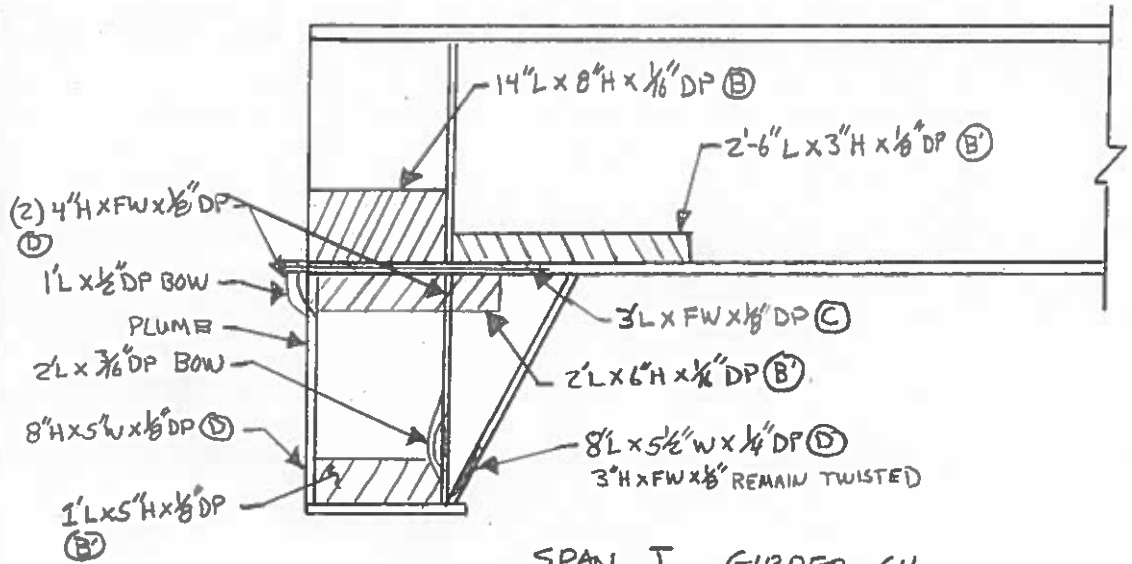

SPAN I, GIRDER G4
WEST ELEV. AT P9

REVISION 1	DATE	CREW	COMPANY	REVISION 3	DATE	CREW	COMPANY
REVISION 2	DATE	CREW	COMPANY	REVISION 4	DATE	CREW	COMPANY

Dewberry® 59 Elm Street, Suite 101 New Haven, CT 06510	FIELD NOTES	JOB NO.	BRIDGE NO: 03014 A
		DATE: 7/10/14	SHEET OF
		CREW: RFP, PHH	

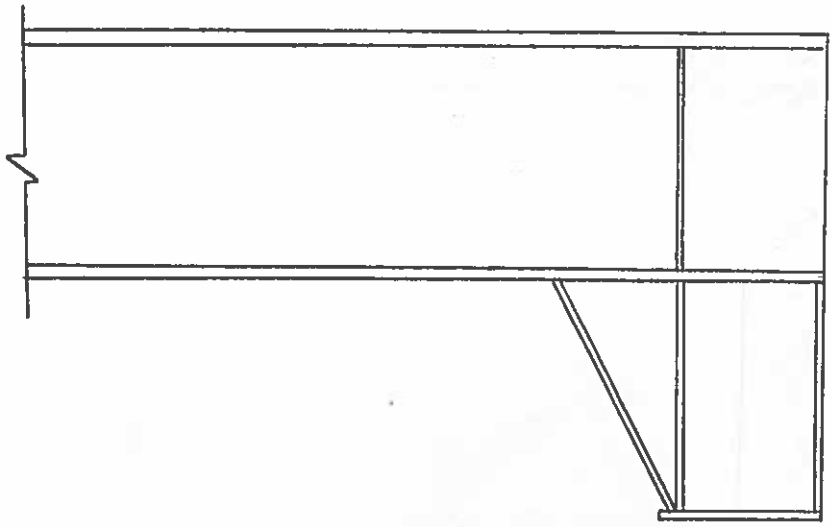

SPAN I, GIRDER G5
EAST ELEV. AT P9

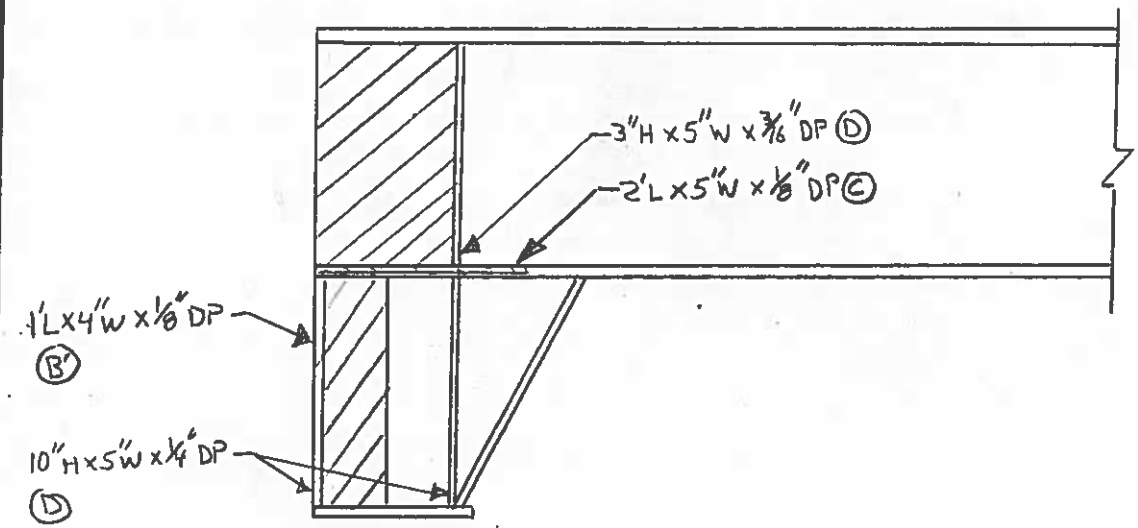

SPAN I, GIRDER G5
WEST ELEV. AT P9

REVISION 1	DATE	CREW	COMPANY	REVISION 3	DATE	CREW	COMPANY
REVISION 2	DATE	CREW	COMPANY	REVISION 4	DATE	CREW	COMPANY

Dewberry® 59 Elm Street, Suite 101 New Haven, CT 06510	FIELD NOTES	JOB NO.	BRIDGE NO: 03014 A
		DATE: 7/2/14	SHEET OF
		CREW: RFP, PHH	

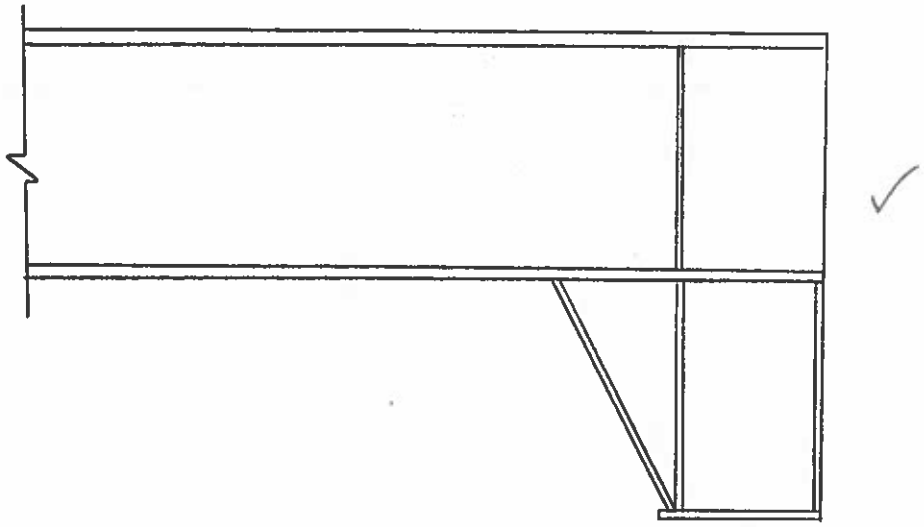

SPAN I, GIRDER
EAST ELEV. AT P9

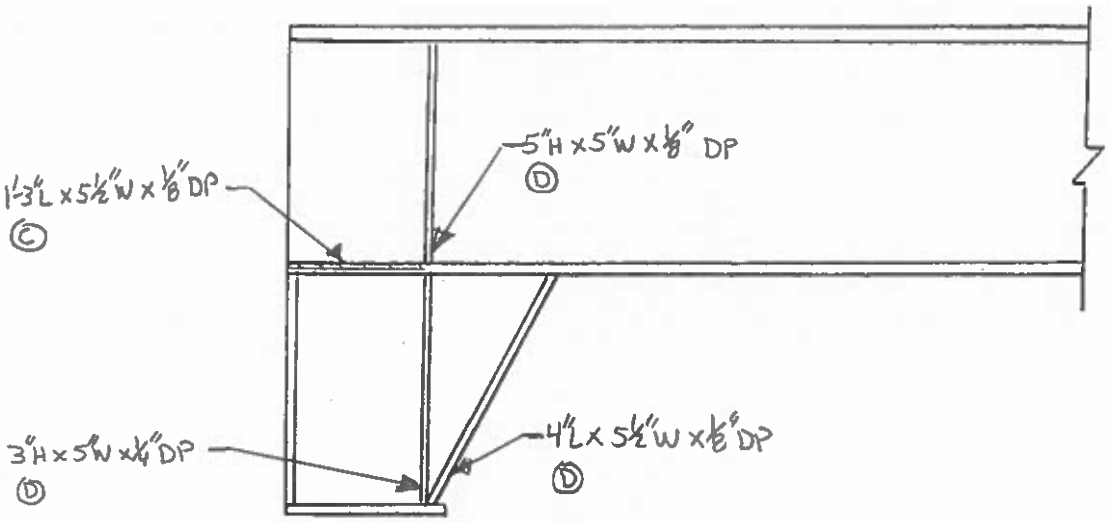

SPAN I, GIRDER G6
WEST ELEV. AT P9

REVISION 1	DATE	CREW	COMPANY	REVISION 3	DATE	CREW	COMPANY
REVISION 2	DATE	CREW	COMPANY	REVISION 4	DATE	CREW	COMPANY

Dewberry
59 Elm Street, Suite 101
New Haven, CT 06510

FIELD NOTES

JOB NO.

BRIDGE NO: 03014 A

DATE: 7/2/2014

SHEET OF

CREW: RFP, PHH

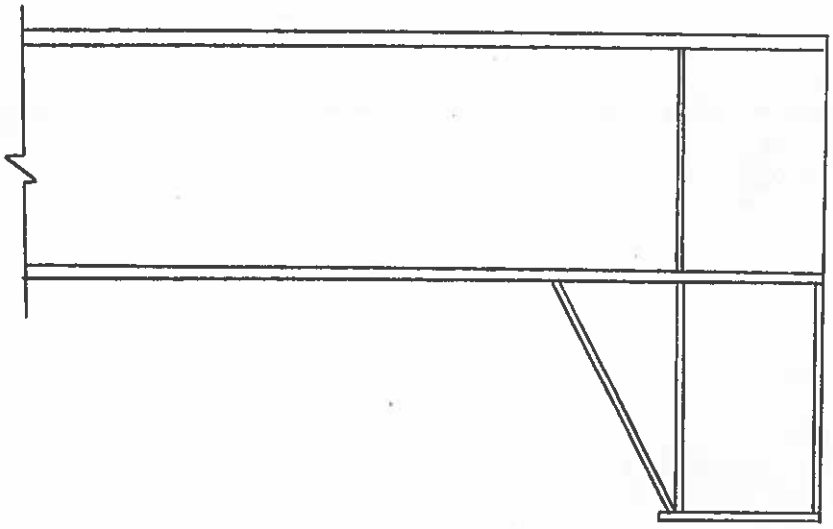

SPAN I, GIRDER 7
EAST ELEV. AT P9

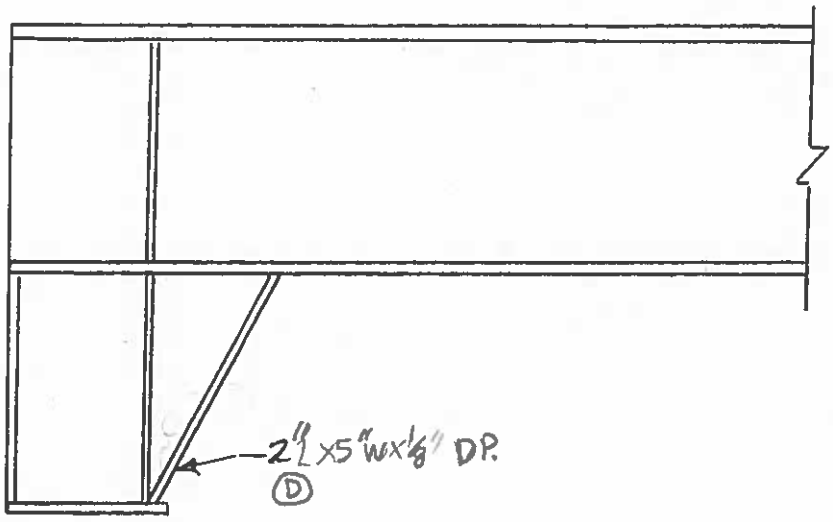

SPAN I, GIRDER 7
WEST ELEV. AT P9

REVISION	DATE	CREW	COMPANY	REVISION	DATE	CREW	COMPANY
1				3			
2				4			

Dewberry
59 Elm Street, Suite 101
New Haven, CT 06510

FIELD NOTES

JOB NO.

BRIDGE NO: 03014 A

DATE: 7/2/14

SHEET OF

CREW: RFP, PHH

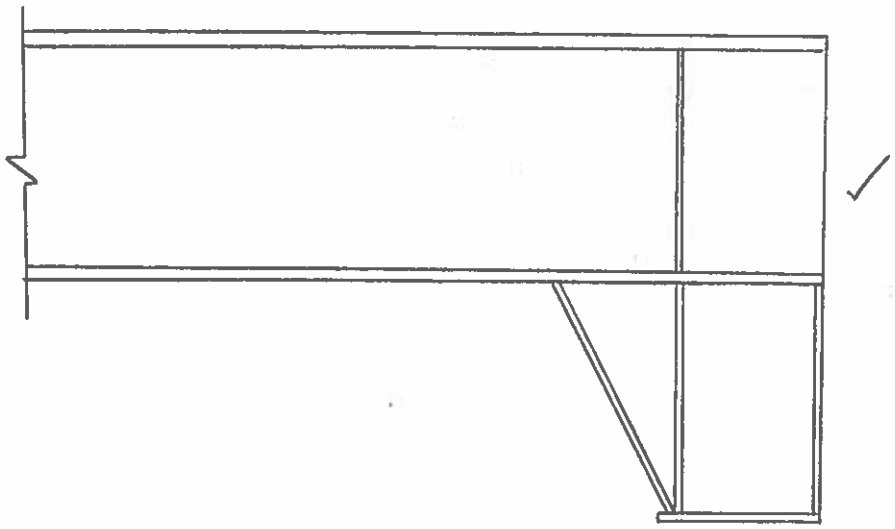

SPAN I, GIRDER 68
FAST ELEV. AT P9

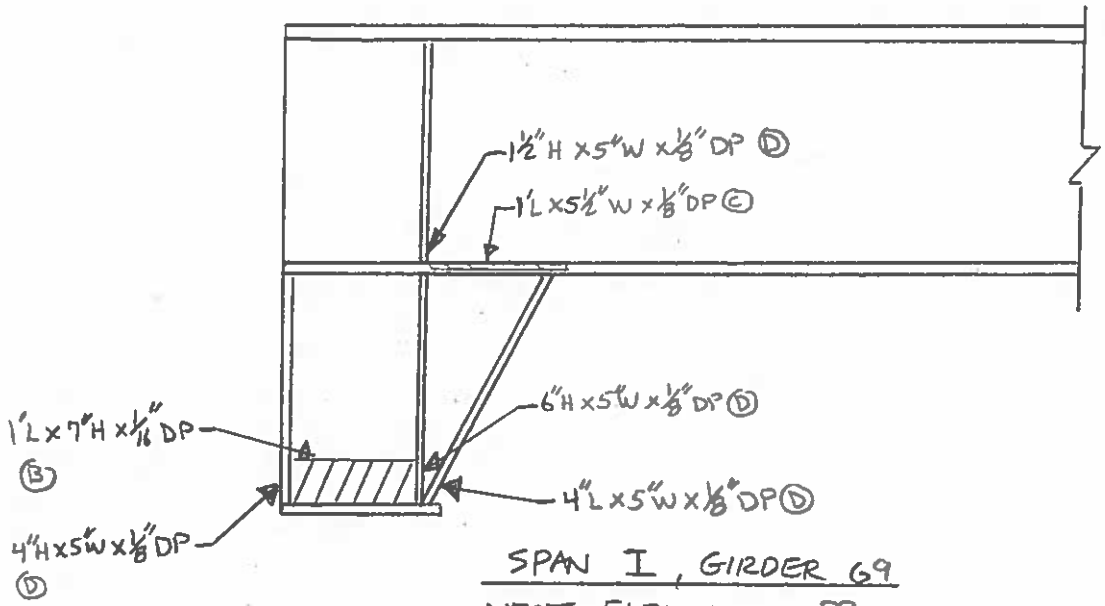

SPAN I, GIRDER 69
WEST ELEV. AT P9

REVISION	DATE	CREW	COMPANY	REVISION	DATE	CREW	COMPANY
1				3			
2				4			

Dewberry
59 Elm Street, Suite 101
New Haven, CT 06510

FIELD NOTES

JOB NO.

BRIDGE NO: 03014 A

DATE: 7/2/14

SHEET OF

CREW: RFP, PHH

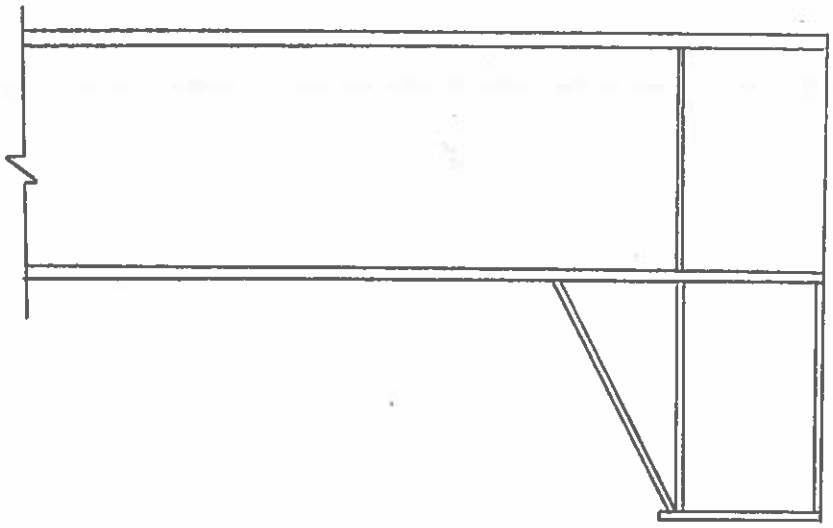

SPAN I, GIRDER G9
EAST ELEV. AT P9

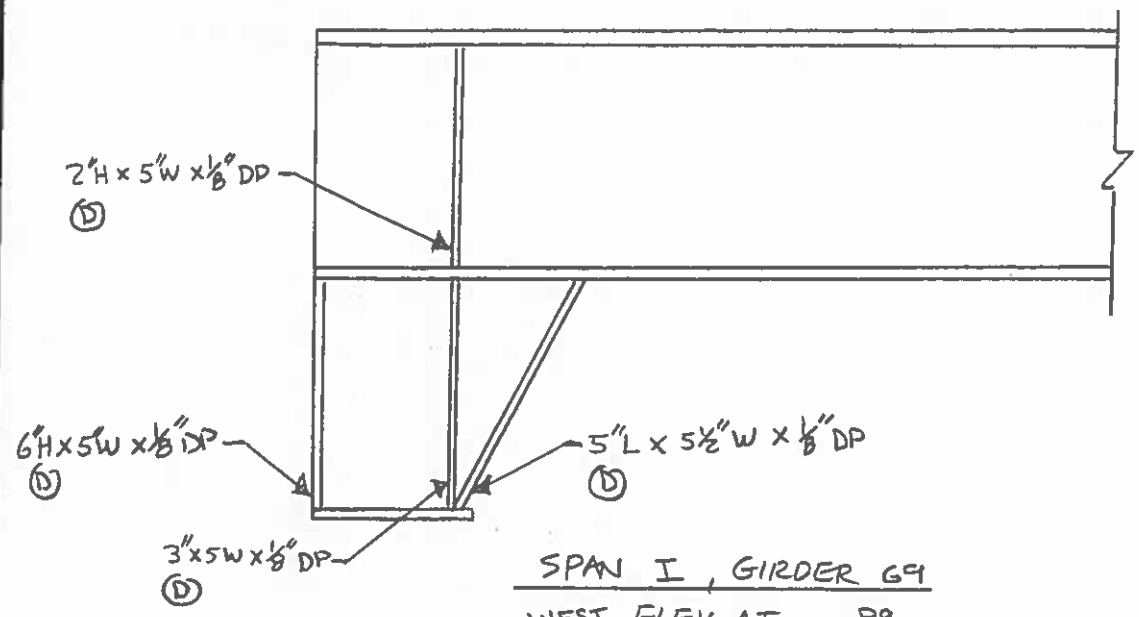

SPAN I, GIRDER G9
WEST ELEV. AT P9

REVISION 1	DATE	CREW	COMPANY	REVISION 3	DATE	CREW	COMPANY
REVISION 2	DATE	CREW	COMPANY	REVISION 4	DATE	CREW	COMPANY

Dewberry
59 Elm Street, Suite 101
New Haven, CT 06510

FIELD NOTES

JOB NO.

BRIDGE NO: 03014 A

DATE: 7/15/14

SHEET OF

CREW: RFP, PHH

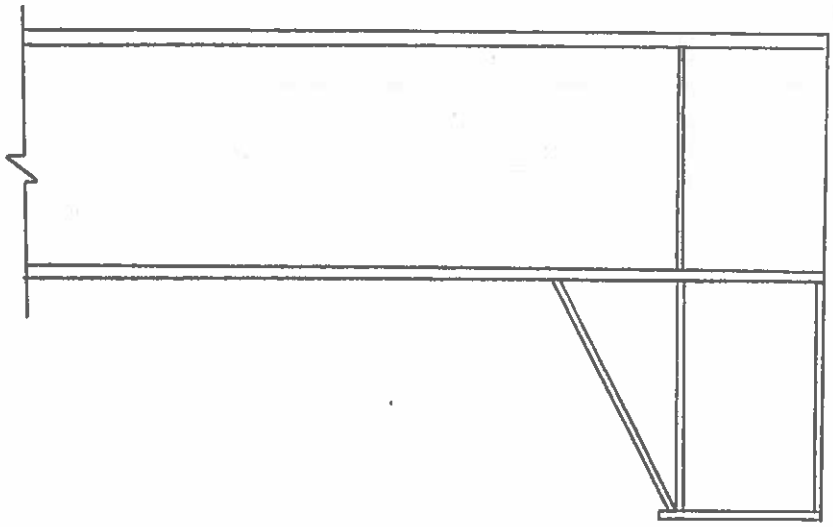

SPAN I, GIRDER G10
EAST ELEV. AT P9

• WEB TIPPED ¼" EAST OVER 2'

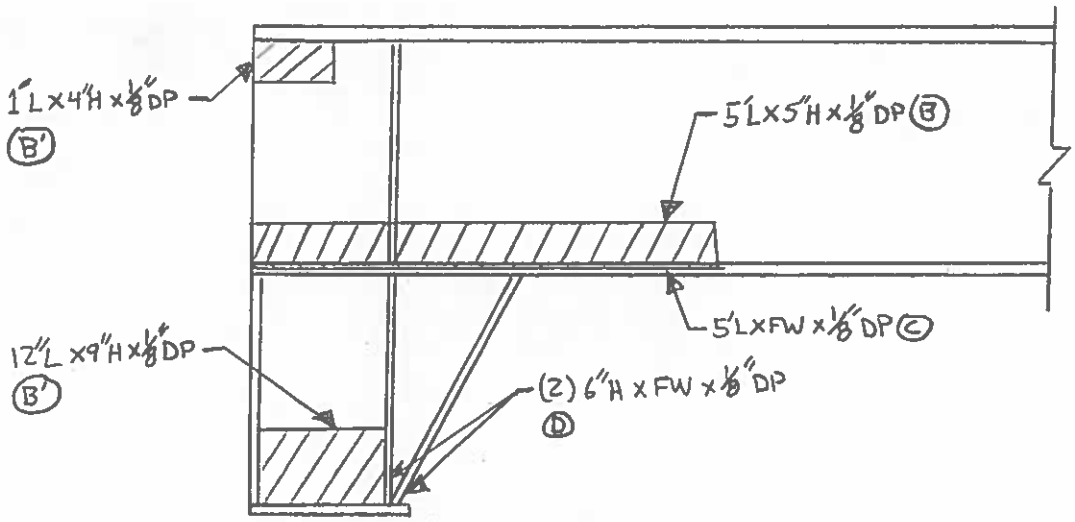

SPAN I, GIRDER G10
WEST ELEV. AT P9

REVISION 1	DATE	CREW	COMPANY	REVISION 3	DATE	CREW	COMPANY
REVISION 2	DATE	CREW	COMPANY	REVISION 4	DATE	CREW	COMPANY

Dewberry
59 Elm Street, Suite 101
New Haven, CT 06510

FIELD NOTES

JOB NO.

BRIDGE NO: 03014 A

DATE: 7/15/14

SHEET OF

CREW: RFP, PHH

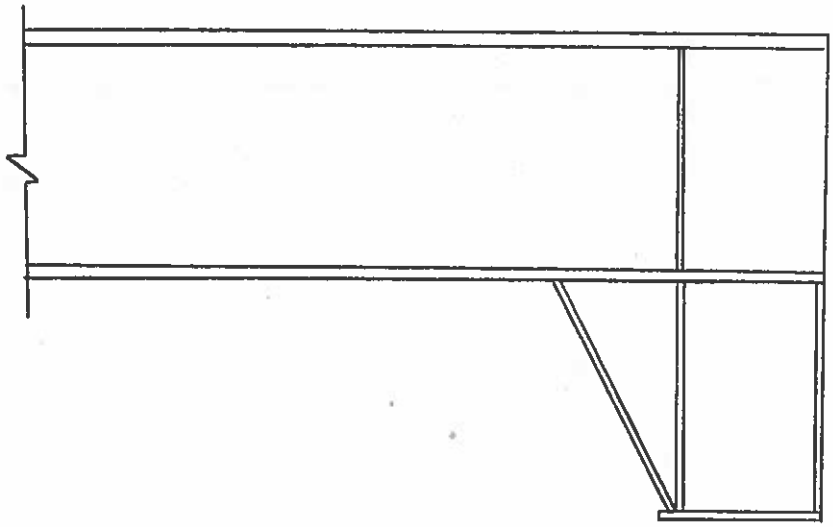

SPAN I, GIRDER G11
EAST ELEV. AT P9

• WEB TIPPED EAST ¼" OVER 2'

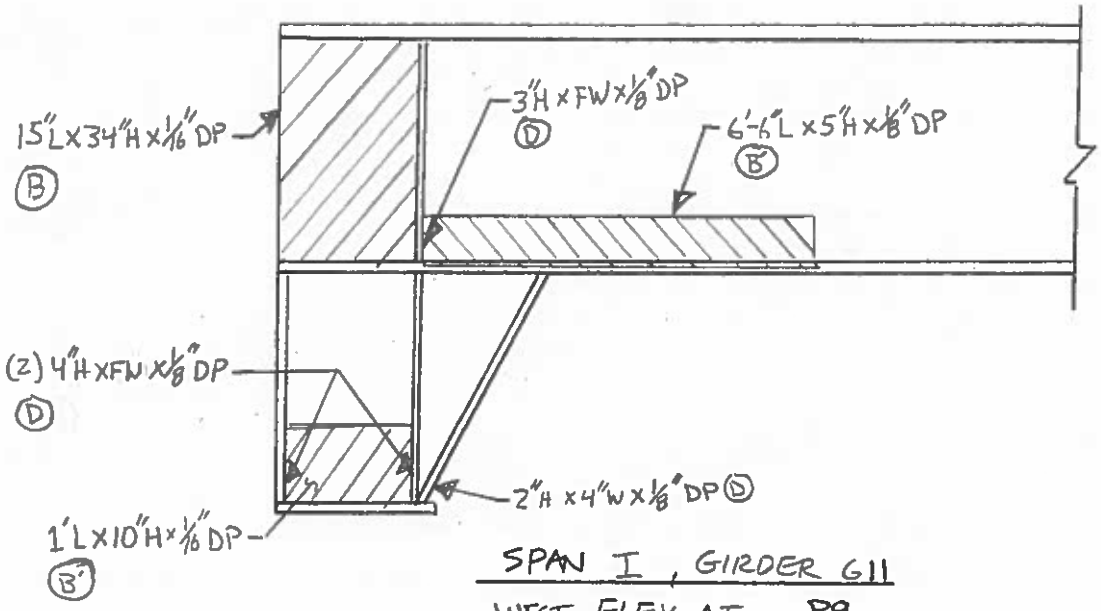

SPAN I, GIRDER G11
WEST ELEV. AT P9

REVISION	DATE	CREW	COMPANY	REVISION	DATE	CREW	COMPANY
1				3			
2				4			

Dewberry
59 Elm Street, Suite 101
New Haven, CT 06510

FIELD NOTES

JOB NO.

BRIDGE NO: 03014 A

DATE: 7/15/14

SHEET OF

CREW: RFP, PHH

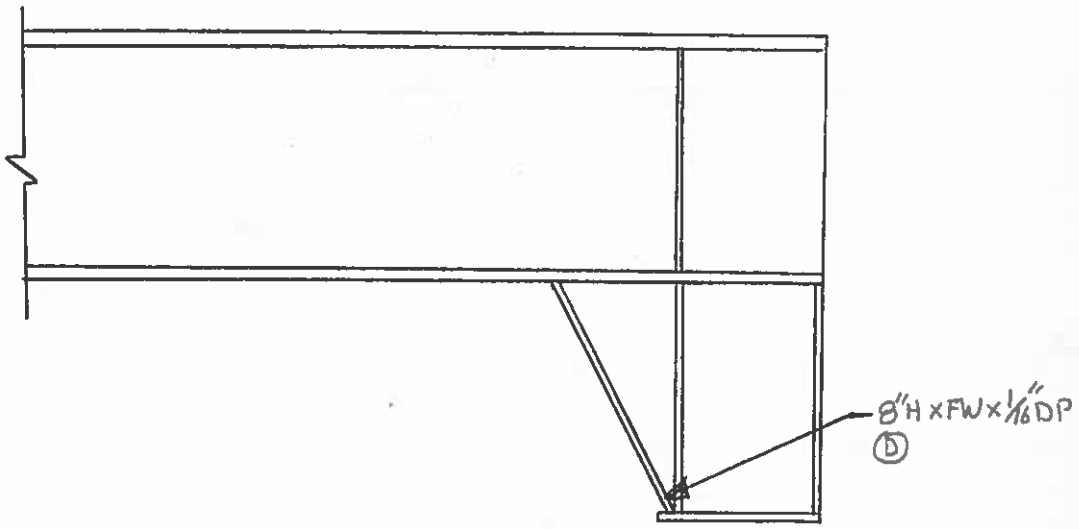

SPAN I, GIRDER G12
EAST ELEV. AT P9

• WEB TIPPED 1/4" OVER 2' EAST

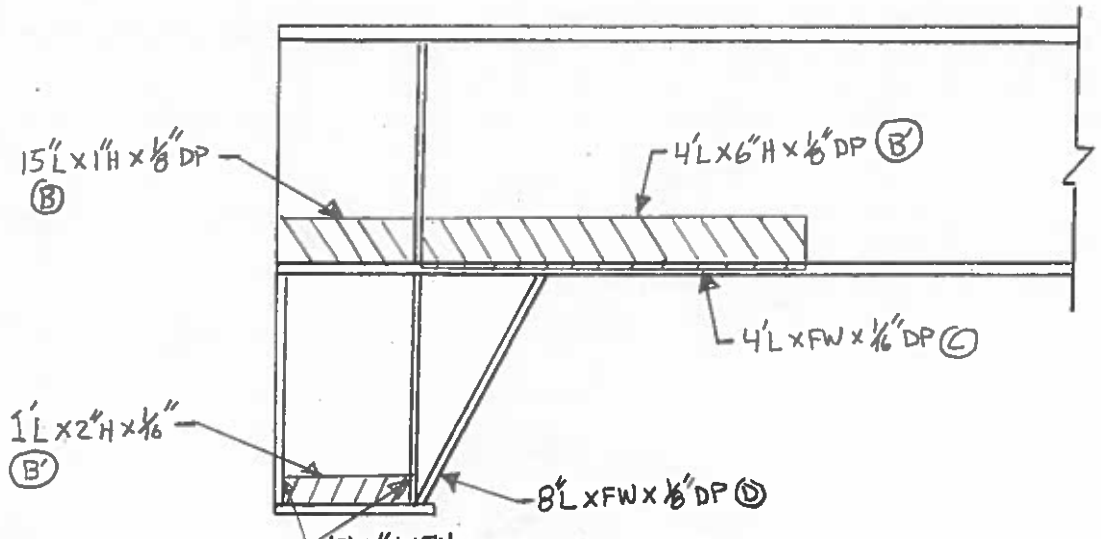

SPAN I, GIRDER G12
WEST ELEV. AT P9

REVISION 1	DATE	CREW	COMPANY	REVISION 3	DATE	CREW	COMPANY
REVISION 2	DATE	CREW	COMPANY	REVISION 4	DATE	CREW	COMPANY

Dewberry® 59 Elm Street, Suite 101 New Haven, CT 06510	FIELD NOTES	JOB NO.	BRIDGE NO: 03014A
		DATE: 7/10/14	SHEET OF
		CREW: RFP, PHH	

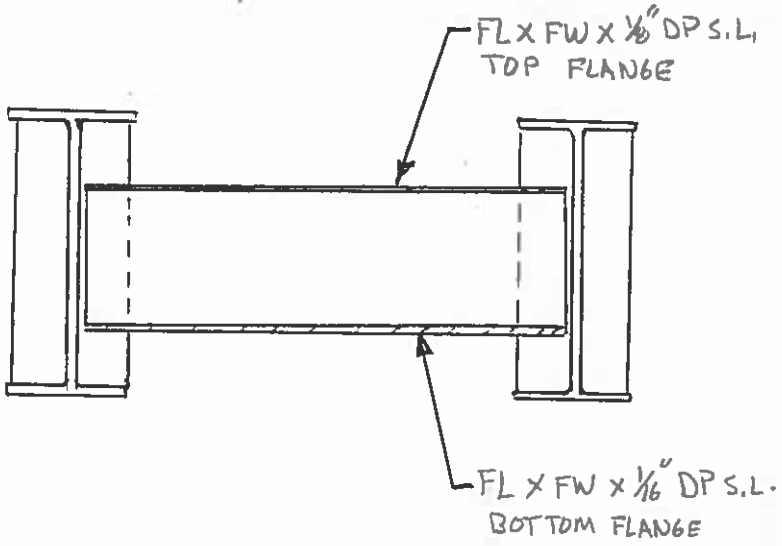

BAY 1 END DIAPHAGM

SPAN I @ P8

REVISION 1	DATE	CREW	COMPANY	REVISION 3	DATE	CREW	COMPANY
REVISION 2	DATE	CREW	COMPANY	REVISION 4	DATE	CREW	COMPANY

Dewberry	FIELD NOTES	JOB NO.	BRIDGE NO: 03014A
59 Elm Street, Suite 101 New Haven, CT 06510		DATE: 7/10/14	SHEET OF
		CREW: RFP, PHH	

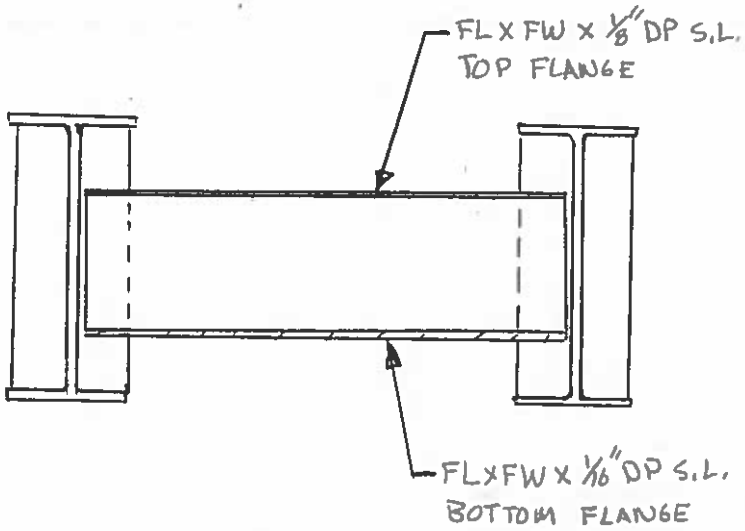

BAY 2 END DIAPHAGM

SPAN I @ P8

REVISION 1	DATE	CREW	COMPANY	REVISION 3	DATE	CREW	COMPANY
REVISION 2	DATE	CREW	COMPANY	REVISION 4	DATE	CREW	COMPANY

Dewberry	FIELD NOTES	JOB NO.	BRIDGE NO: 03014A
59 Elm Street, Suite 101 New Haven, CT 06510		DATE: 7/10/14	SHEET OF
		CREW: RFP, PHH	

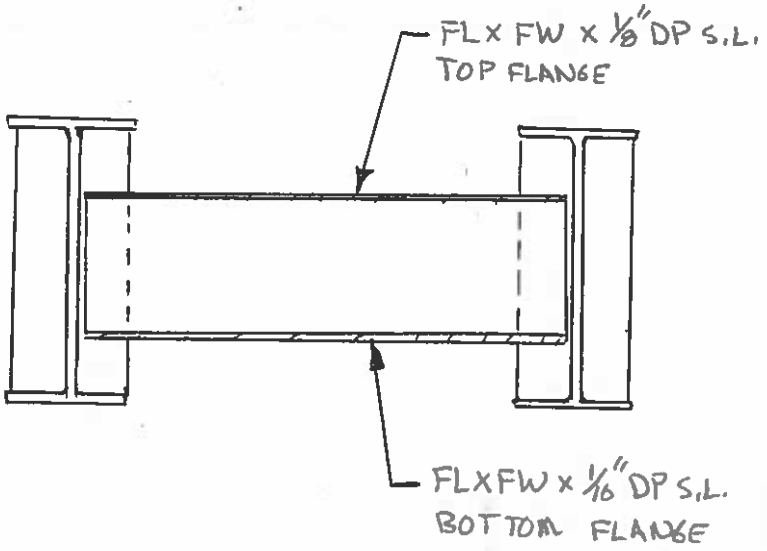

BAY 3 END DIAPHAGM

SPAN I @ P8

REVISION 1	DATE	CREW	COMPANY	REVISION 3	DATE	CREW	COMPANY
REVISION 2	DATE	CREW	COMPANY	REVISION 4	DATE	CREW	COMPANY

Dewberry® 59 Elm Street, Suite 101 New Haven, CT 06510	FIELD NOTES	JOB NO.	BRIDGE NO: 03014A
		DATE: 7/10/14	SHEET OF
		CREW: RFP, PHH	

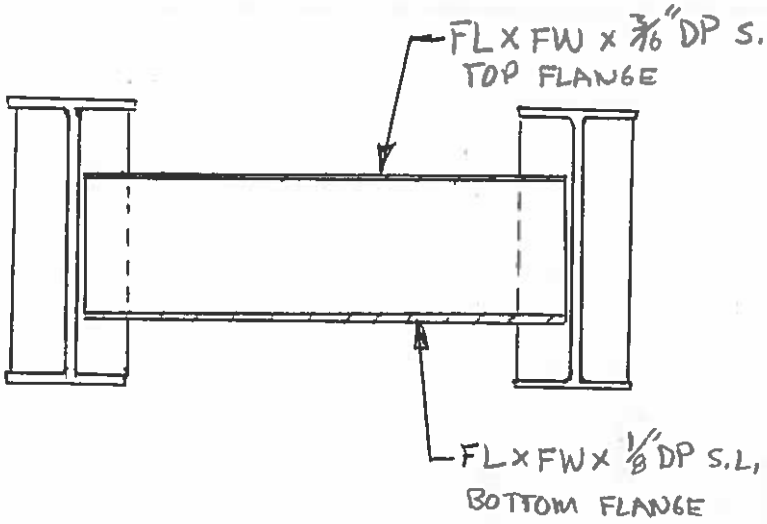

BAY 4 END DIAPHRAGM

SPAN I @ P8

REVISION 1	DATE	CREW	COMPANY	REVISION 3	DATE	CREW	COMPANY
REVISION 2	DATE	CREW	COMPANY	REVISION 4	DATE	CREW	COMPANY

Dewberry® 59 Elm Street, Suite 101 New Haven, CT 06510	FIELD NOTES	JOB NO.	BRIDGE NO: 03014 A
		DATE: 7/10/14	SHEET OF
		CREW: RFP, PHH	

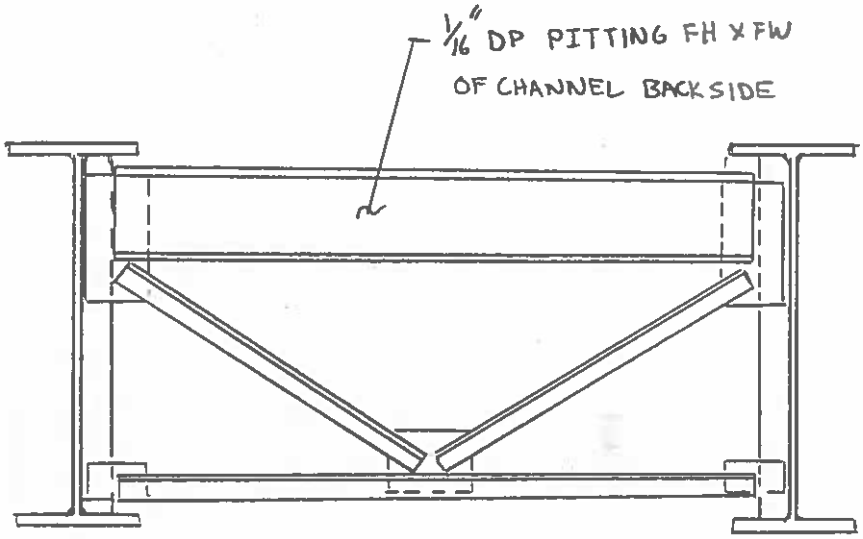

SPAN I BAY 1

END DIAPHRAGM @ P9

REVISION 1	DATE	CREW	COMPANY	REVISION 3	DATE	CREW	COMPANY
REVISION 2	DATE	CREW	COMPANY	REVISION 4	DATE	CREW	COMPANY

Dewberry® 59 Elm Street, Suite 101 New Haven, CT 06510	FIELD NOTES	JOB NO.	BRIDGE NO: 03014 A
		DATE: 7/10/14	SHEET OF
		CREW: RFP, PHH	

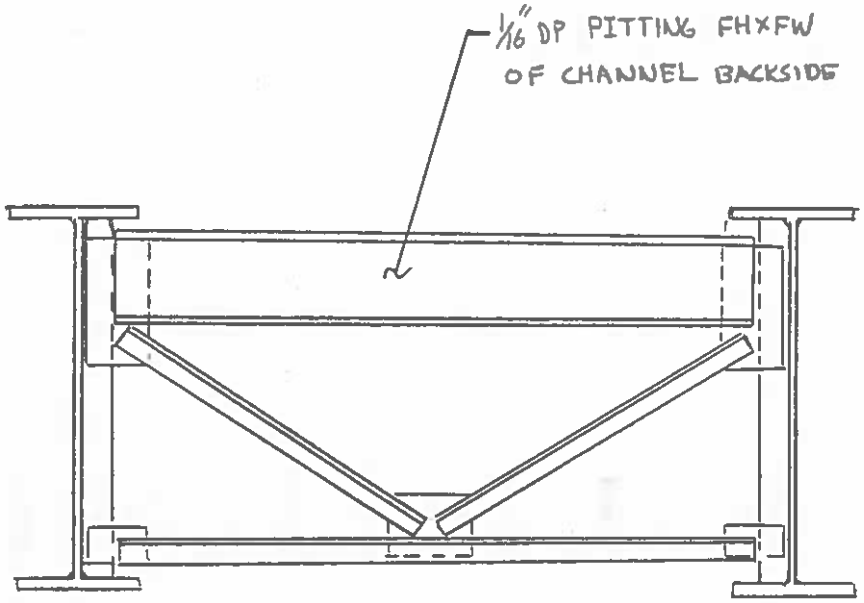

SPAN I BAY 2

END DIAPHRAGM @ P9

REVISION 1	DATE	CREW	COMPANY	REVISION 3	DATE	CREW	COMPANY
REVISION 2	DATE	CREW	COMPANY	REVISION 4	DATE	CREW	COMPANY

Dewberry
59 Elm Street, Suite 101
New Haven, CT 06510

FIELD NOTES

JOB NO.

BRIDGE NO: 03014 A

DATE: 7/16/14

SHEET OF

CREW: RFP, PHH

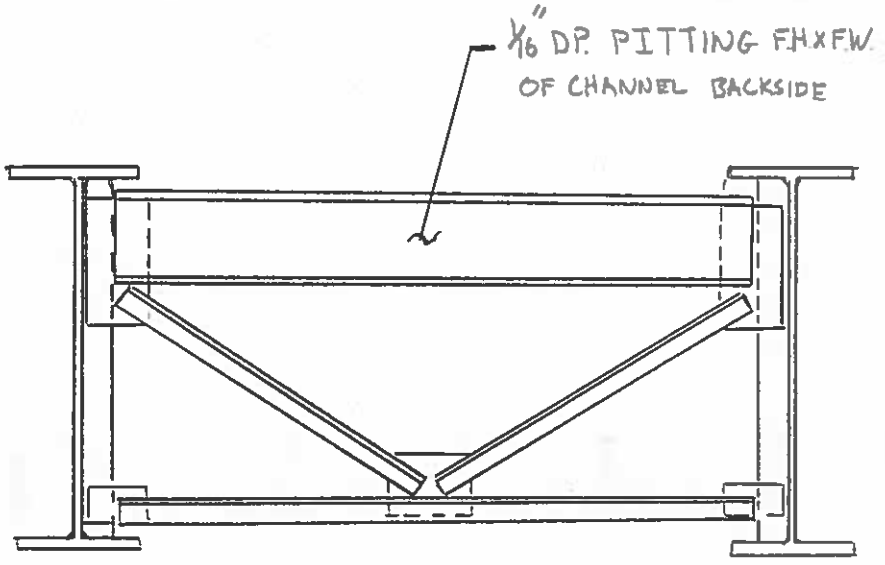

SPAN I BAY 3

END DIAPHRAGM @ P9

REVISION	DATE	CREW	COMPANY	REVISION	DATE	CREW	COMPANY
1				3			
2				4			

Dewberry
59 Elm Street, Suite 101
New Haven, CT 06510

FIELD NOTES

JOB NO.

BRIDGE NO: 03014 A

DATE: 7/10/14

SHEET OF

CREW: RFP, PHH

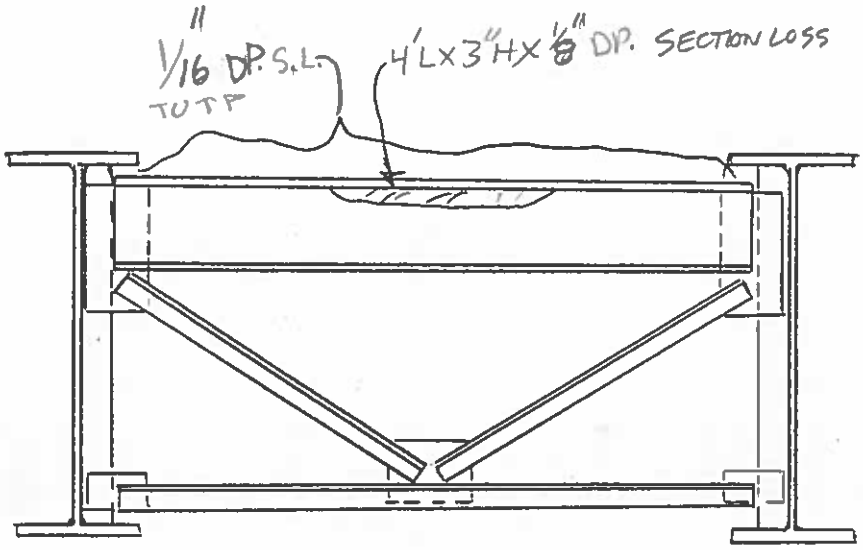

TYP. NOTES @ P9:

1/16" DP. Pitting FHX FW OF CHANNEL (BACK SIDE)

SPAN I BAY 4

END DIAPHRAGM @ P9

REVISION	DATE	CREW	COMPANY	REVISION	DATE	CREW	COMPANY
1				3			
2				4			

SPAN J

FIELD NOTES

PREPARED BY: Garg Consulting Services, Inc.

PROJ. NO. 170-3013

DATE: 9/6/10

CREW: PDG, MD

BRIDGE NO. 3014A

SHEET 57 53

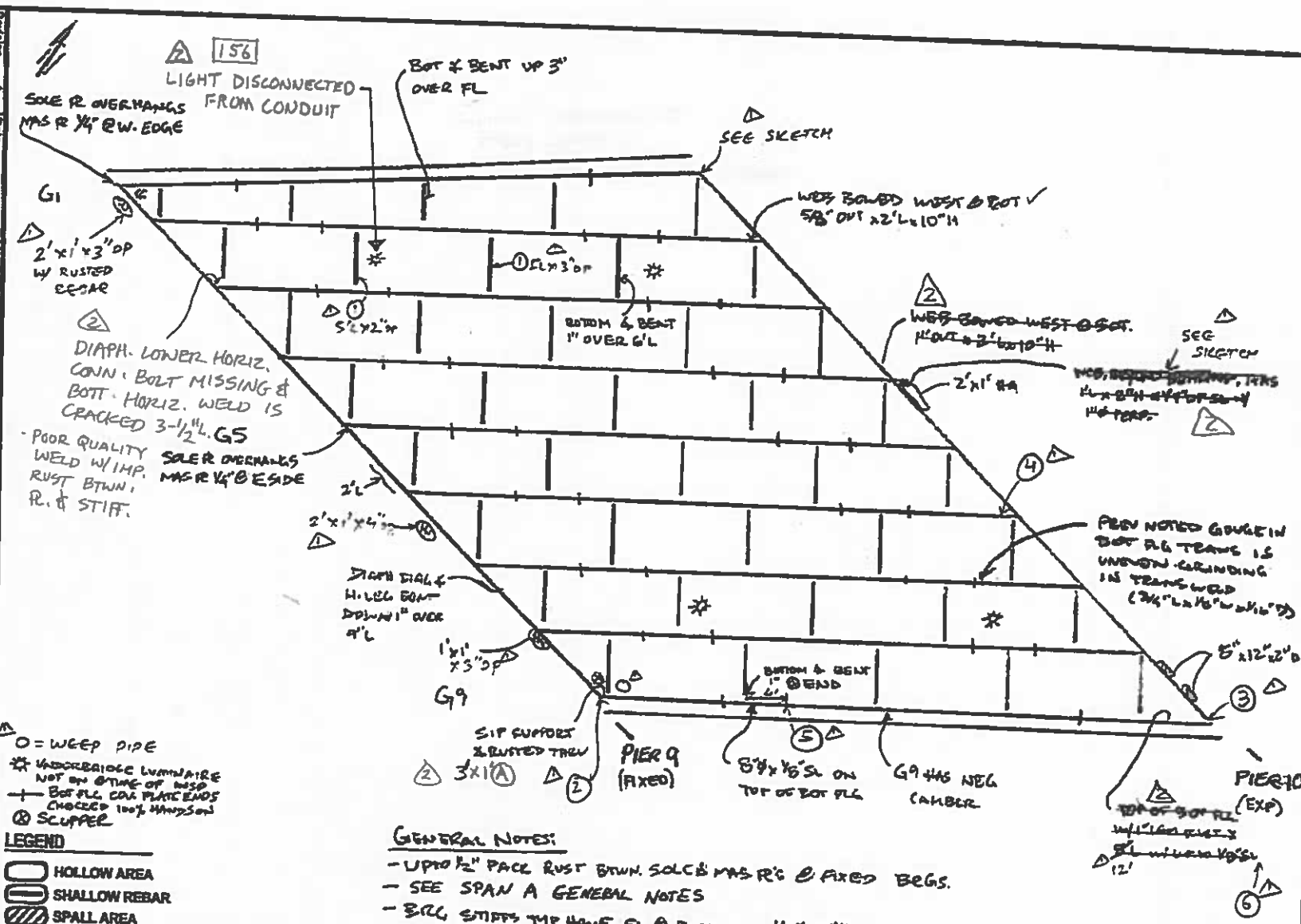

O = WEEP PIPE

✲ UNDERBRIDGE LUMINAIRE NOT ON @ TIME OF INSP

BOT FLG COV PLATE ENDS CHECKED 100% HANDSON

⊗ SCUPPER

LEGEND

- HOLLOW AREA
- SHALLOW REBAR
- SPALL AREA
- SPALL AREA WITH EXPOSED REBAR
- MAP CRACKS OR HAIRLINE MAP CRACKS
- HAIRLINE CRACKS (HLC) OR CRACKS (CR)
- HONEY COMB AREA
- SCALE AREA (HVY, MED, OR LT)

GENERAL NOTES:

- UPTO 1/2" PACK RUST BTWN. SOLE & MAS PL'S @ FIXED BRGS.
- SEE SPAN A GENERAL NOTES
- BRG STIFFS TYP HAVE SL @ BOT UPTO 1/4"x3"H x FW
- UP TO 50% PAINT PEELING OFF FROM GIRDERS.

- SEE NEXT SHEET FOR DETERIORATION NOTES

FRAMING PLAN SPAN J

2 SEE DETAIL SHEETS FOR MORE INFORMATION

Revision	Date	Crew	Company
1	9/5/12	PKG, JKC	Garg
2	7/10/14 & 7/15/14	RFP, PHH	DEW

Dewberry
59 Elm Street, Suite 101
New Haven, CT 06510

FIELD NOTES

JOB NO.

BRIDGE NO: 03014 A

DATE: 7/10/2014

SHEET OF

CREW: RFP, PHH

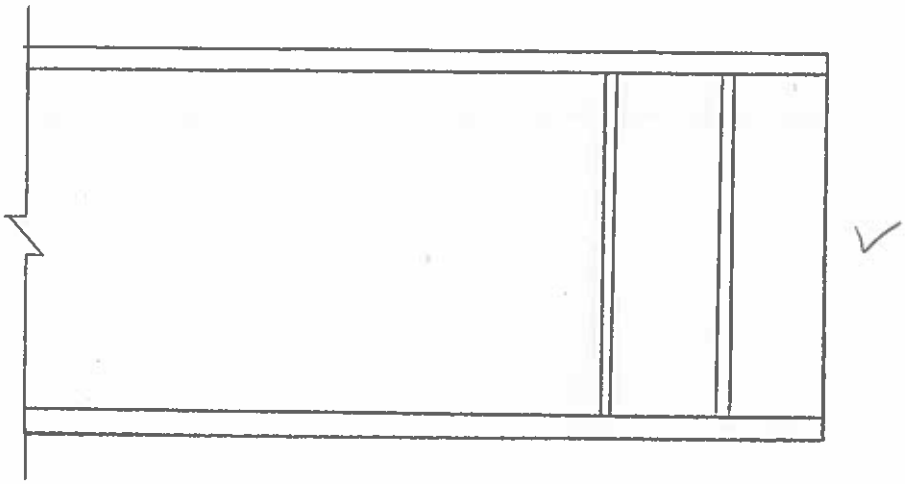

SPAN J, BEAM 1
WEST ELEV. AT P9

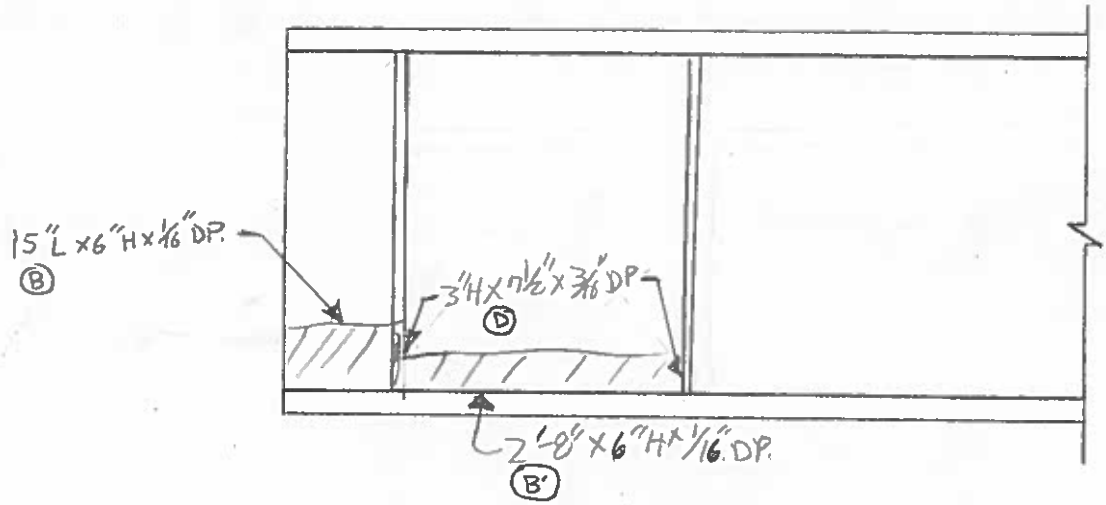

SPAN J, BEAM 1
EAST ELEV. AT P9

REVISION	DATE	CREW	COMPANY	REVISION	DATE	CREW	COMPANY
1				3			
2				4			

Dewberry	FIELD NOTES	JOB NO.	BRIDGE NO: 03014 A
59 Elm Street, Suite 101 New Haven, CT 06510		DATE: 7/10/2014	SHEET OF
		CREW: RFP, PHH	

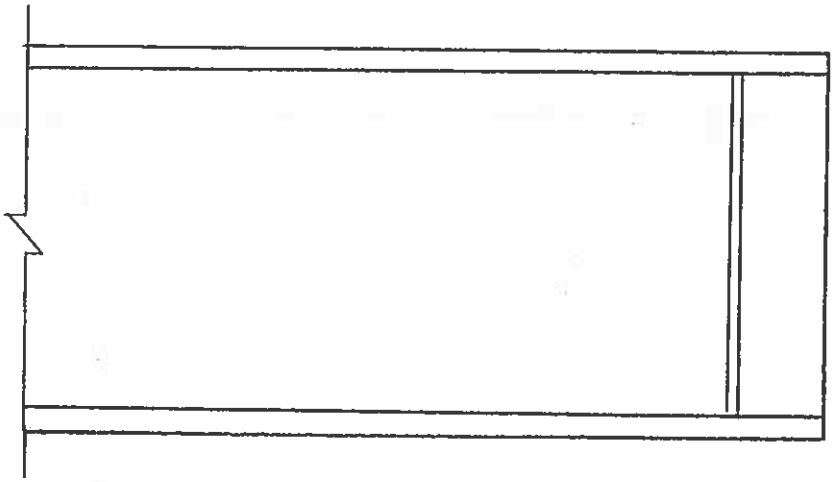

SPAN J, BEAM Z
WEST ELEV. AT P9

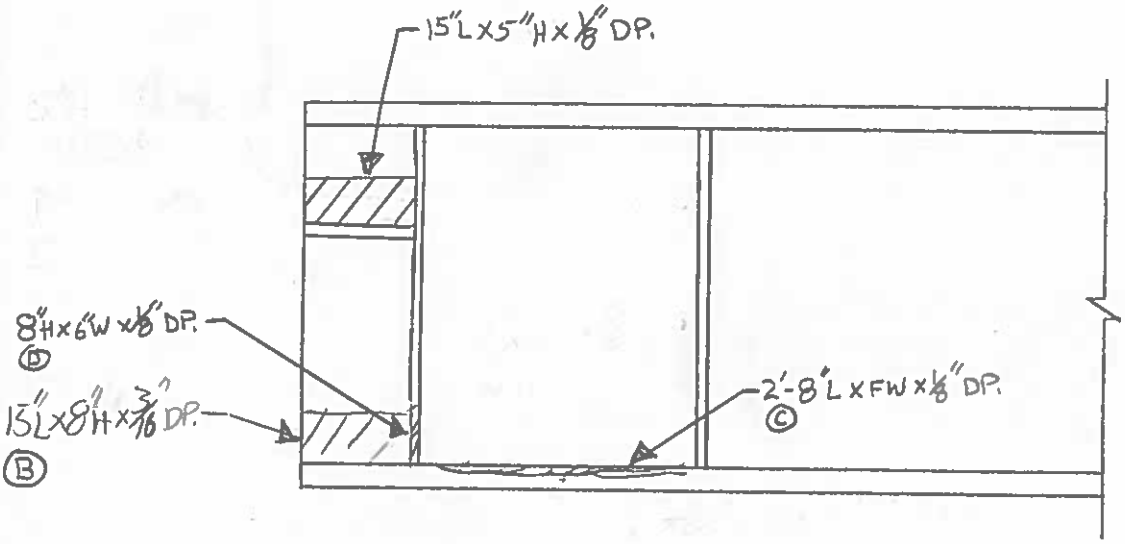

SPAN J, BEAM Z
EAST ELEV. AT P9

REVISION 1	DATE	CREW	COMPANY	REVISION 3	DATE	CREW	COMPANY
REVISION 2	DATE	CREW	COMPANY	REVISION 4	DATE	CREW	COMPANY

Dewberry
59 Elm Street, Suite 101
New Haven, CT 06510

FIELD NOTES	JOB NO.	BRIDGE NO: 03014A
	DATE: 7/10/14	SHEET OF
	CREW: RFP, PHH	

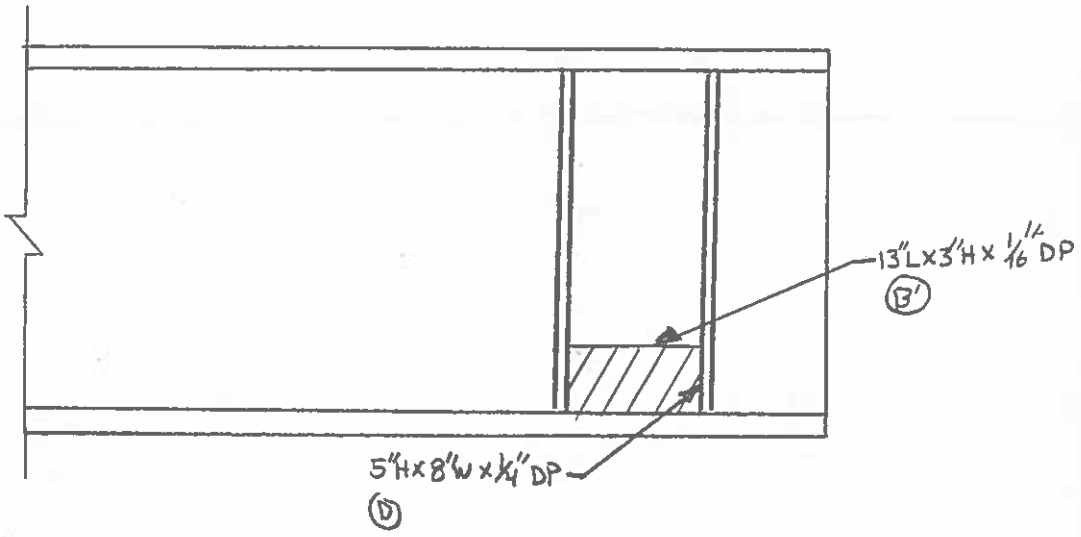

SPAN J, BEAM G3
WEST ELEV. AT P9

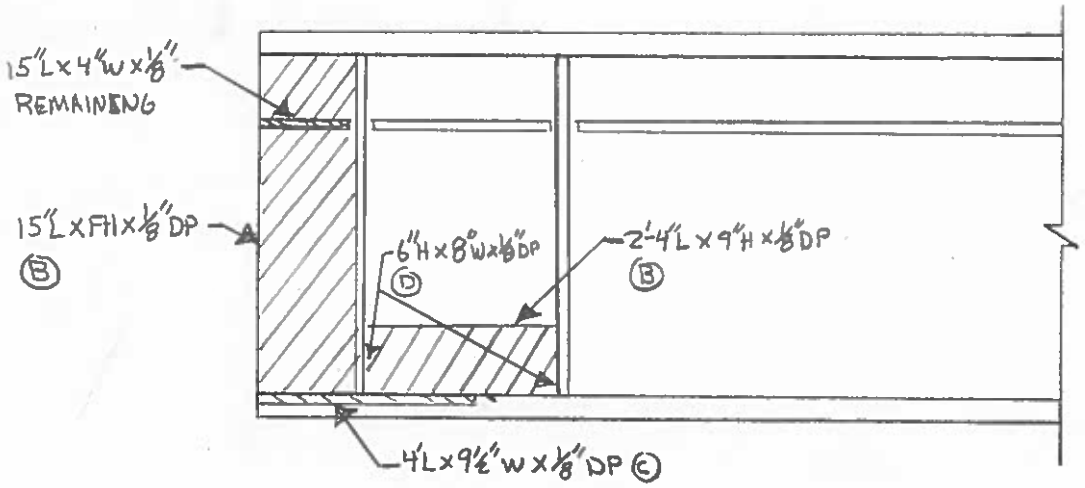

SPAN J, BEAM G3
EAST ELEV. AT P9

REVISION 1	DATE	CREW	COMPANY	REVISION 3	DATE	CREW	COMPANY
REVISION 2	DATE	CREW	COMPANY	REVISION 4	DATE	CREW	COMPANY

Dewberry
59 Elm Street, Suite 101
New Haven, CT 06510

FIELD NOTES	JOB NO.	BRIDGE NO: 03014 A
	DATE: 7/10/14	SHEET OF
	CREW: RFP, PAH	

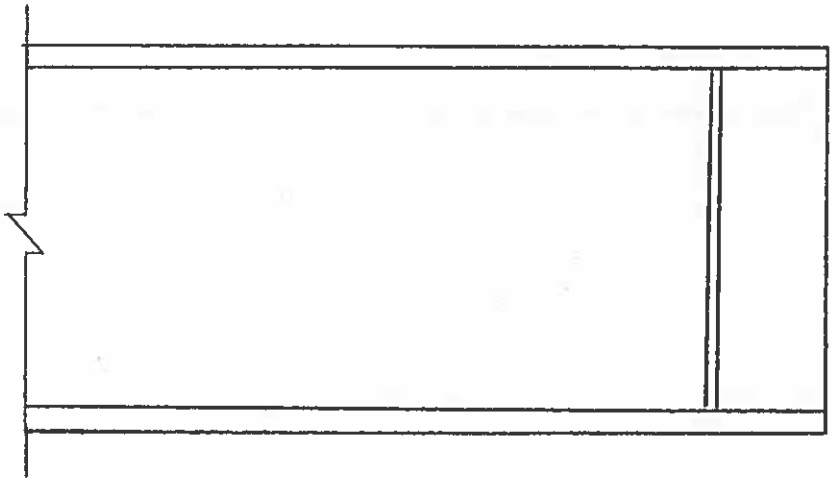

SPAN J, BEAM 4
WEST ELEV. AT P9

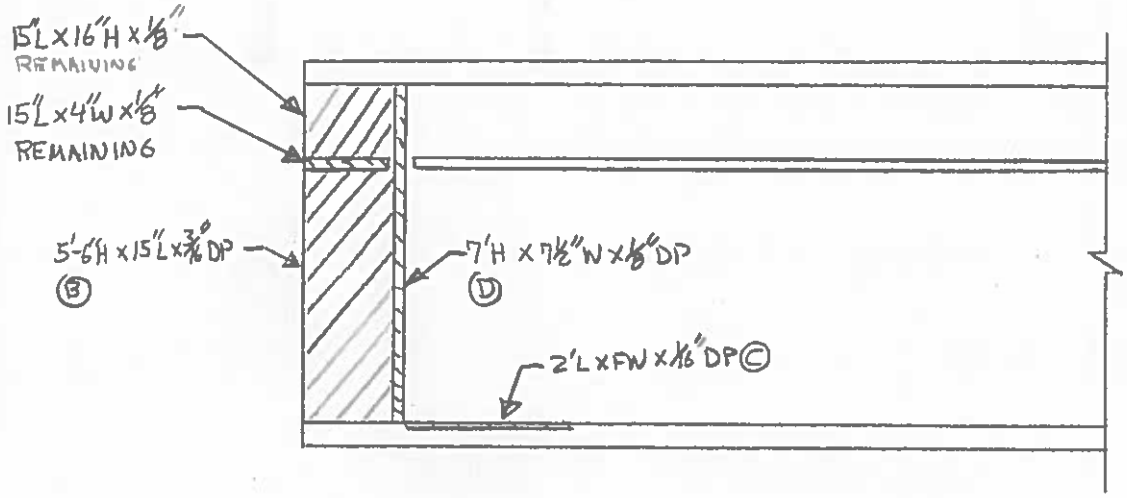

SPAN J, BEAM 4
EAST ELEV. AT P9

REVISION	DATE	CREW	COMPANY	REVISION	DATE	CREW	COMPANY
1				3			
2				4			

Dewberry
59 Elm Street, Suite 101
New Haven, CT 06510

FIELD NOTES

JOB NO.

BRIDGE NO: 03014 A

DATE: 7/10/2014

SHEET OF

CREW: RFP, PHH

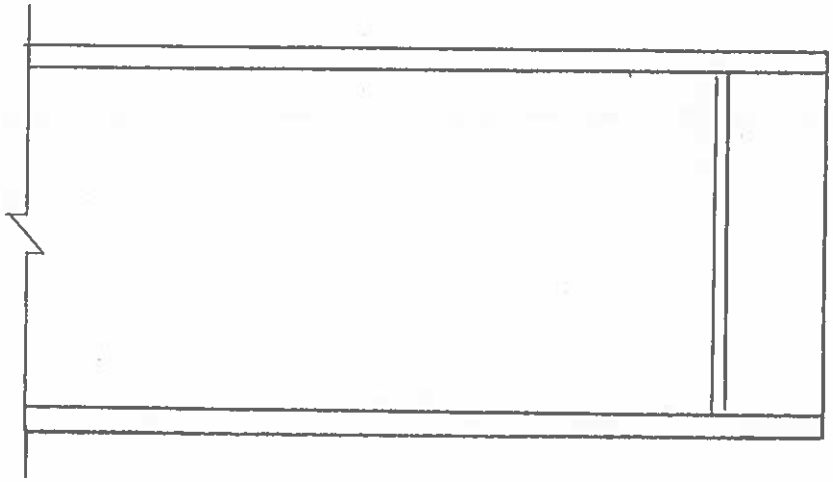

SPAN J, BEAM 5
WEST ELEV. AT P9

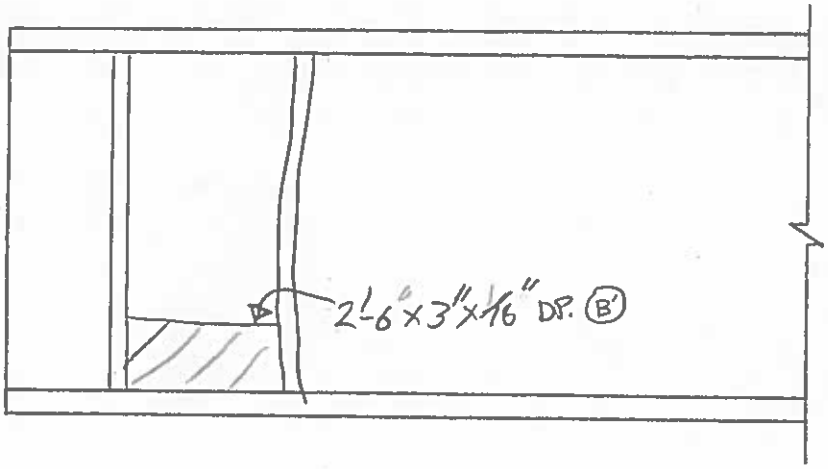

SPAN J, BEAM 5
EAST ELEV. AT P9

REVISION	DATE	CREW	COMPANY	REVISION	DATE	CREW	COMPANY
1				3			
2				4			

Dewberry
59 Elm Street, Suite 101
New Haven, CT 06510

FIELD NOTES

JOB NO.

BRIDGE NO: 03014 A

DATE: 7/15/14

SHEET OF

CREW: RFP, PHH

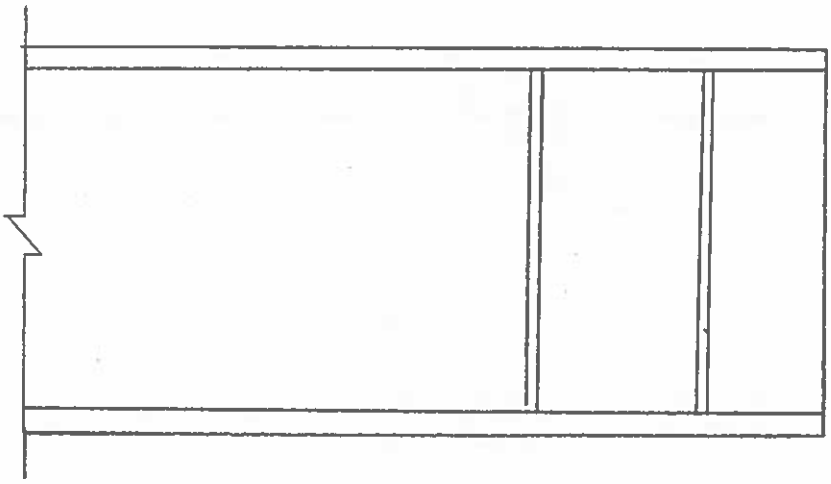

SPAN J, BEAM GG
WEST ELEV. AT P9

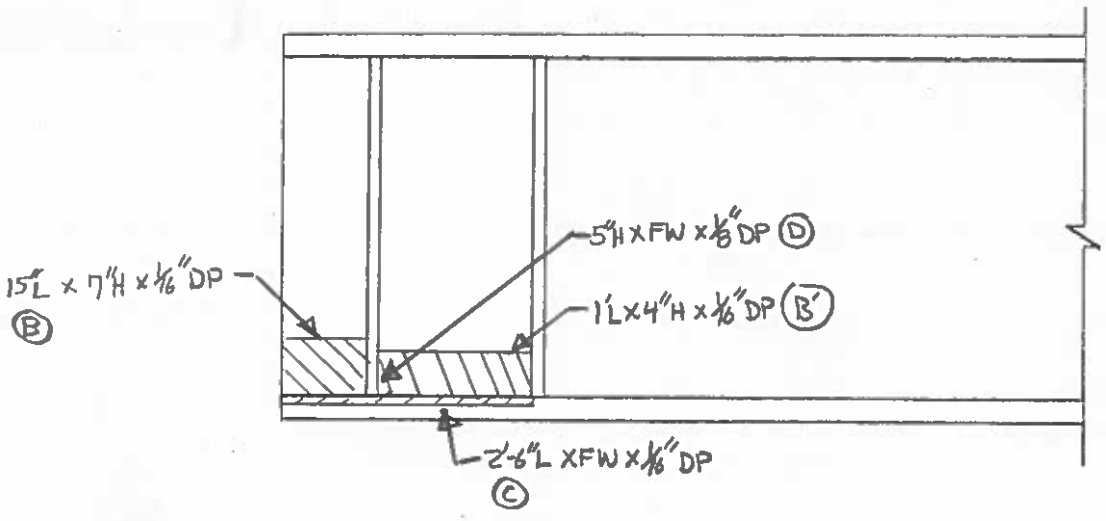

SPAN J, BEAM GG
EAST ELEV. AT P9

REVISION	DATE	CREW	COMPANY	REVISION	DATE	CREW	COMPANY
1				3			
2				4			

Dewberry
59 Elm Street, Suite 101
New Haven, CT 06510

FIELD NOTES	JOB NO.	BRIDGE NO: 03014 A
	DATE: 7/15/14	SHEET OF
	CREW: RFP, PHH	

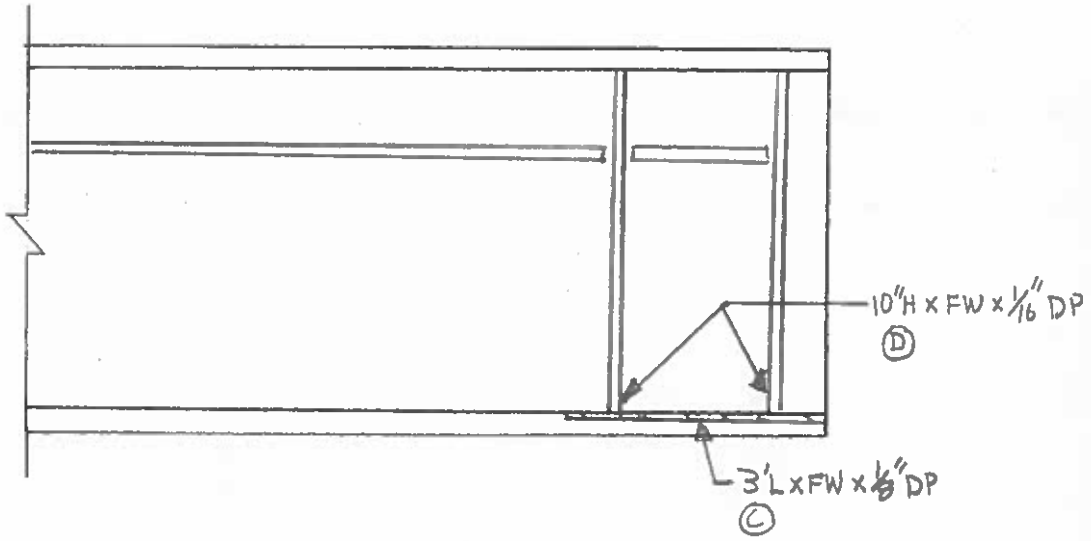

SPAN J, BEAM 7
WEST ELEV. AT P9

• WEB TIPPED 3/16" EAST OVER 2'

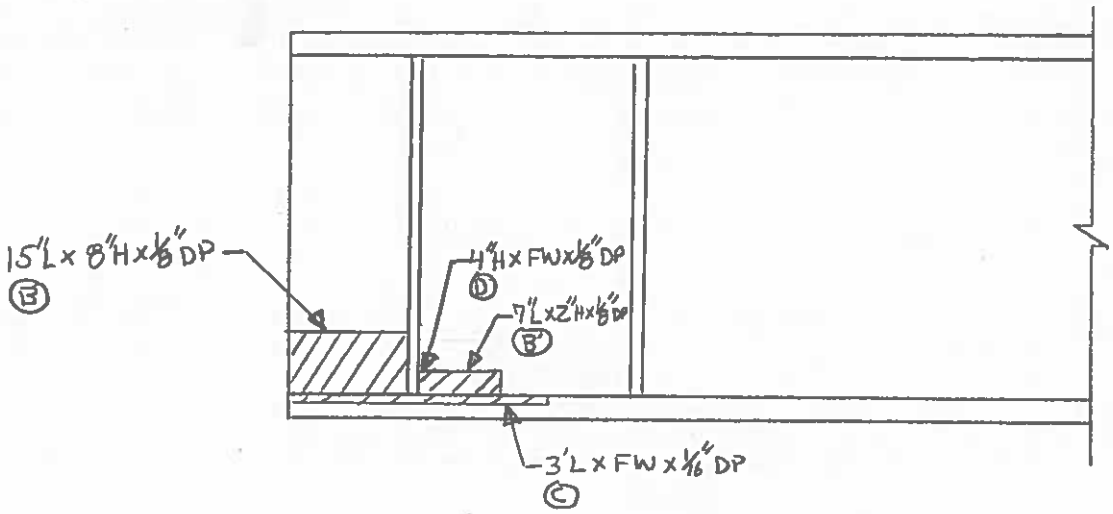

SPAN J, BEAM 7
EAST ELEV. AT P9

REVISION 1	DATE	CREW	COMPANY	REVISION 3	DATE	CREW	COMPANY
REVISION 2	DATE	CREW	COMPANY	REVISION 4	DATE	CREW	COMPANY

Dewberry
59 Elm Street, Suite 101
New Haven, CT 06510

FIELD NOTES

JOB NO.

BRIDGE NO: 03014 A

DATE: 7/15/14

SHEET OF

CREW: RFP, PHH

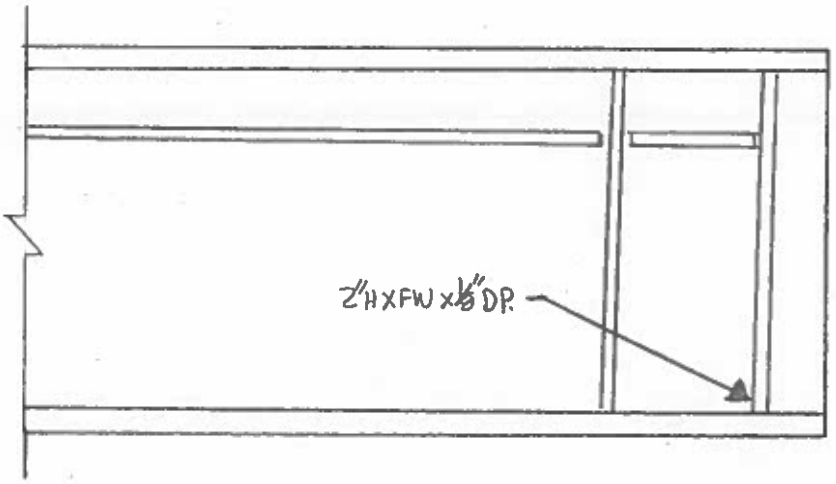

SPAN J, BEAM 68
WEST ELEV. AT P9

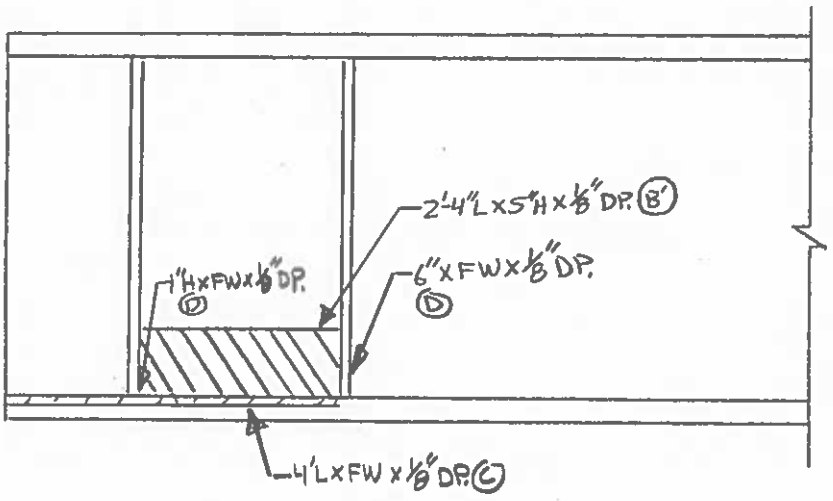

SPAN J, BEAM 68
EAST ELEV. AT P9

REVISION	DATE	CREW	COMPANY	REVISION	DATE	CREW	COMPANY
1				3			
2				4			

Dewberry® 59 Elm Street, Suite 101 New Haven, CT 06510	FIELD NOTES	JOB NO.	BRIDGE NO: 03014 A
		DATE: 7/15/14	SHEET OF
		CREW: RFP, PHH	

• WEB TIPPED ⅛" EAST OVER 2'

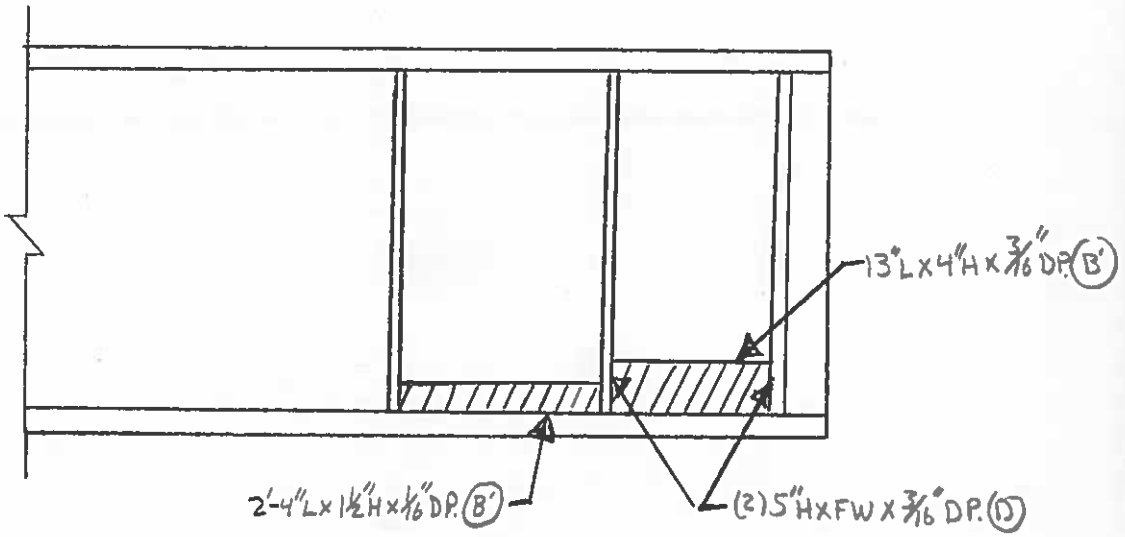

SPAN J, BEAM 69
WEST ELEV. AT P9

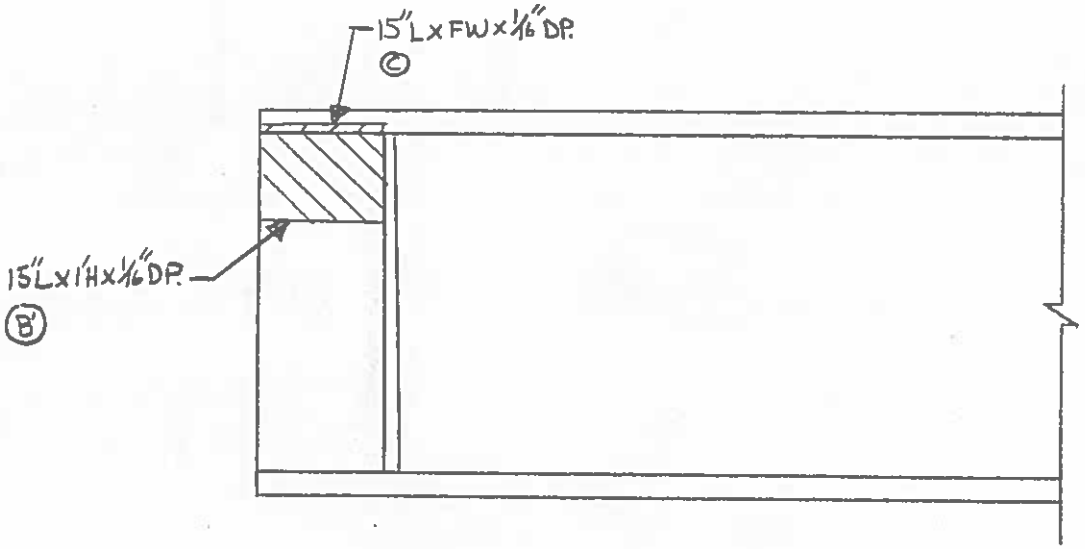

SPAN J, BEAM 69
EAST ELEV. AT P9

REVISION 1	DATE	CREW	COMPANY	REVISION 3	DATE	CREW	COMPANY
REVISION 2	DATE	CREW	COMPANY	REVISION 4	DATE	CREW	COMPANY

Dewberry
59 Elm Street, Suite 101
New Haven, CT 06510

FIELD NOTES

JOB NO.

BRIDGE NO: 03014 A

DATE: 7/2/14

SHEET OF

CREW: RFP, PHH

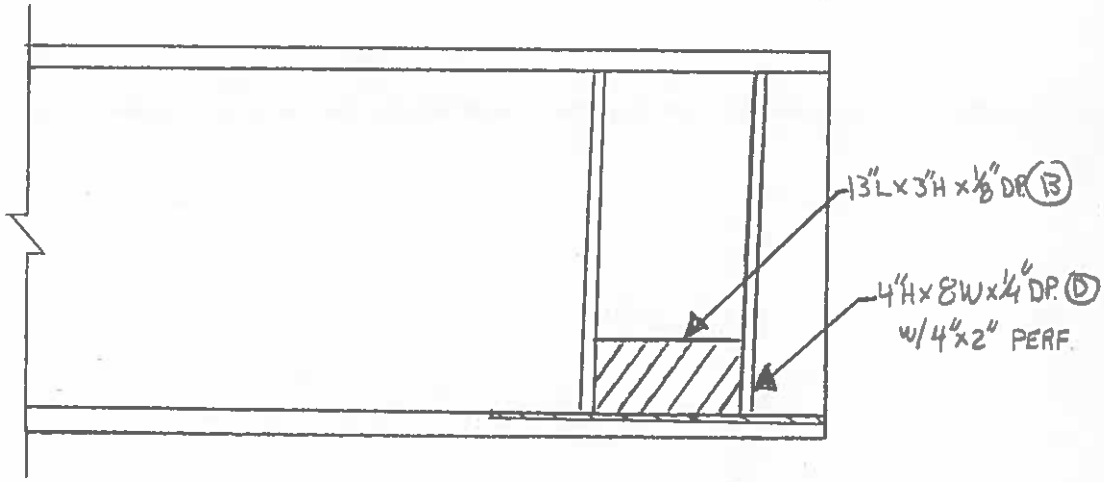

SPAN J, BEAM 61
EAST ELEV. AT P10

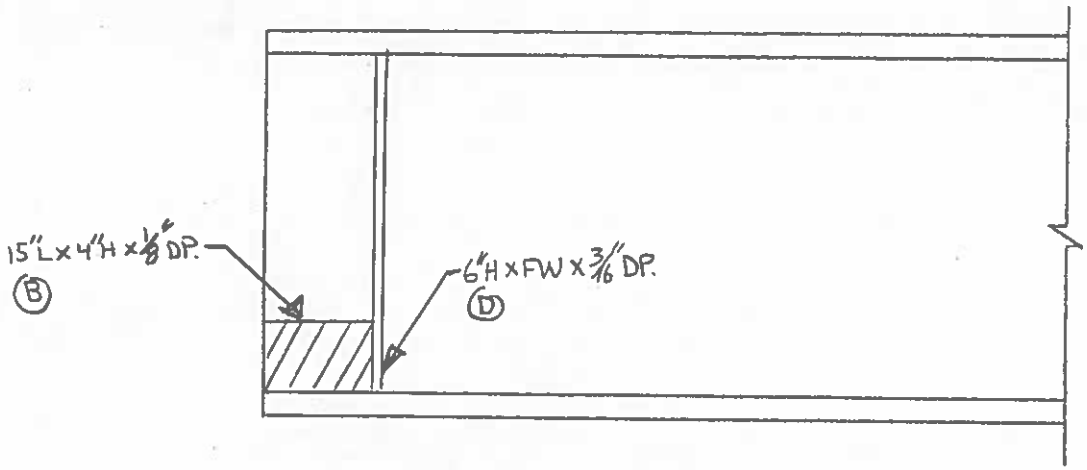

SPAN J, BEAM 61
WEST ELEV. AT P10

REVISION	DATE	CREW	COMPANY	REVISION	DATE	CREW	COMPANY
1				3			
2				4			

Dewberry
59 Elm Street, Suite 101
New Haven, CT 06510

FIELD NOTES	JOB NO.	BRIDGE NO: 03014 A
	DATE: 7/10/14	SHEET OF
	CREW: RFP, PHH	

- WEB BOWED 5/8" WEST OVER 10"H FOR A LENGTH OF 2'

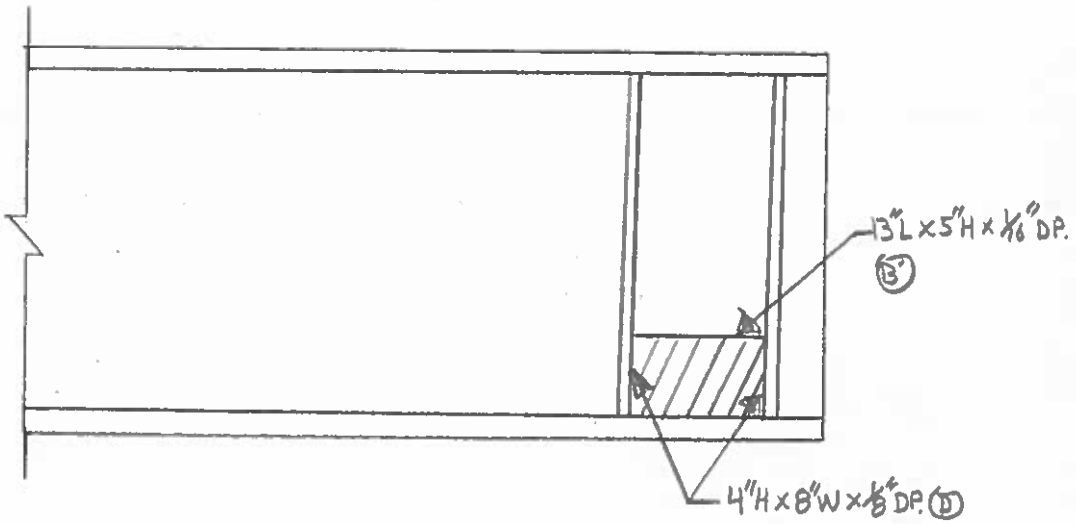

SPAN J, BEAM G2
EAST ELEV. AT P10

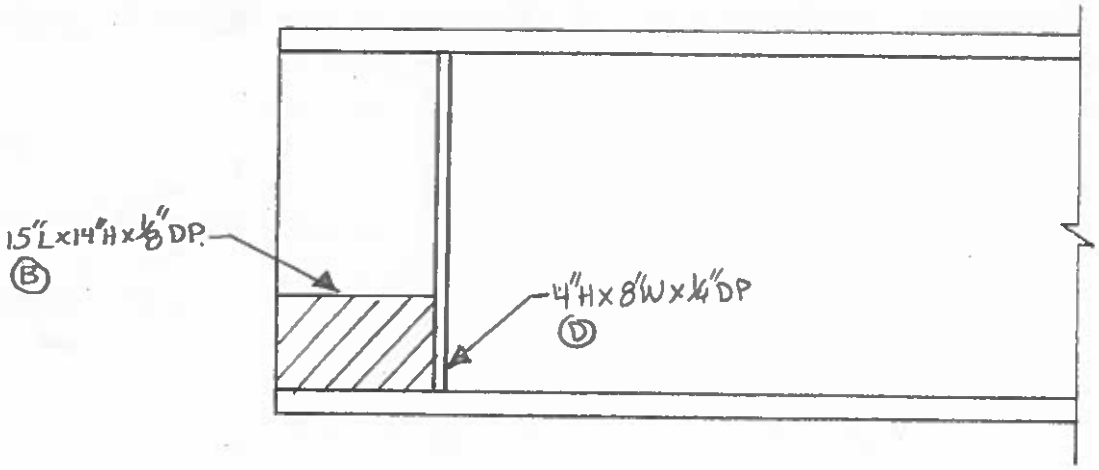

SPAN J, BEAM G2
WEST ELEV. AT P10

REVISION	DATE	CREW	COMPANY	REVISION	DATE	CREW	COMPANY
1				3			
2				4			

Dewberry
59 Elm Street, Suite 101
New Haven, CT 06510

FIELD NOTES

JOB NO.

BRIDGE NO: 03014 A

DATE: 7/15/14

SHEET OF

CREW: RFP, PHH

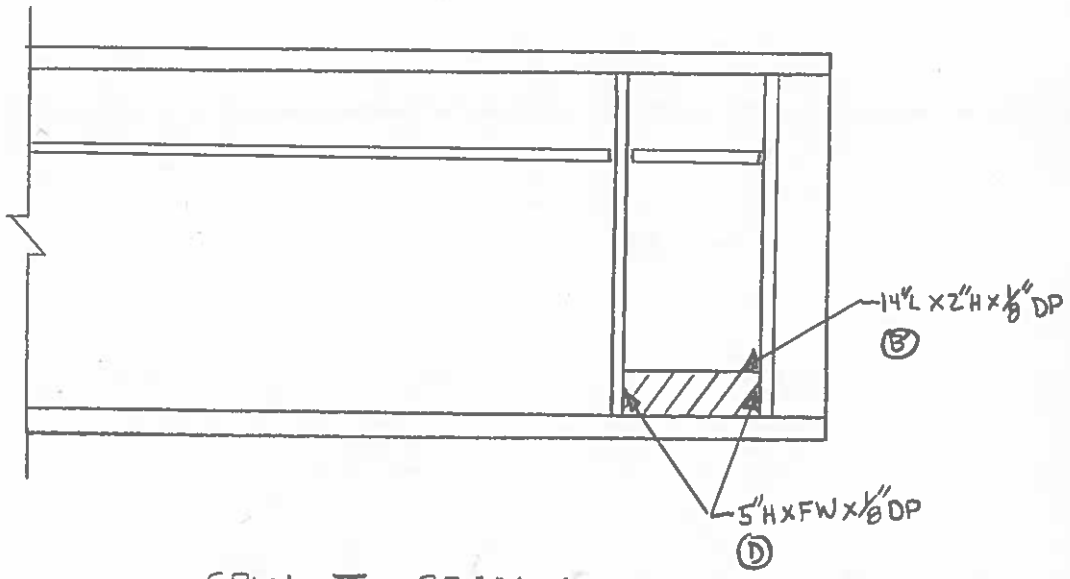

SPAN J, BEAM G3
EAST ELEV. AT P10

• WEB TIPPED 3/16" EAST OVER 2'

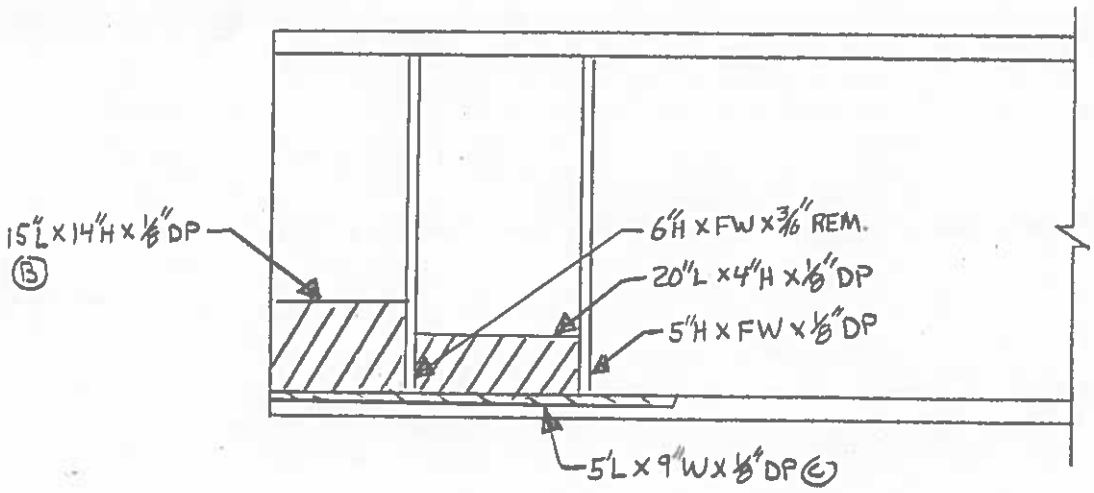

SPAN J, BEAM G3
WEST ELEV. AT P10

REVISION	DATE	CREW	COMPANY	REVISION	DATE	CREW	COMPANY
1				3			
2				4			

Dewberry
59 Elm Street, Suite 101
New Haven, CT 06510

FIELD NOTES

JOB NO.

BRIDGE NO: 03014 A

DATE: 7/15/14

SHEET OF

CREW: RFP, PHH

- WEB BOWED 7/8" WEST OVER 1'

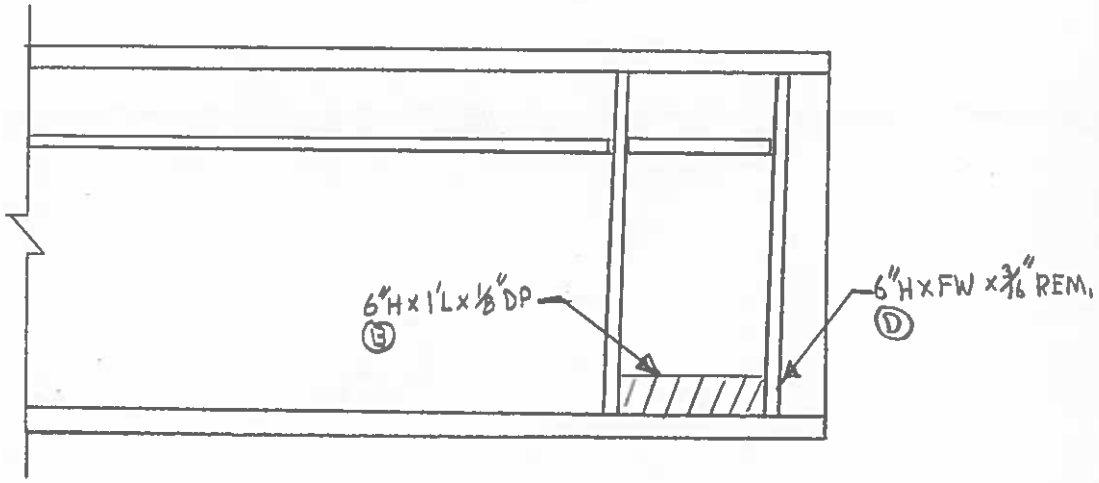

SPAN J, BEAM G4
EAST ELEV. AT P10

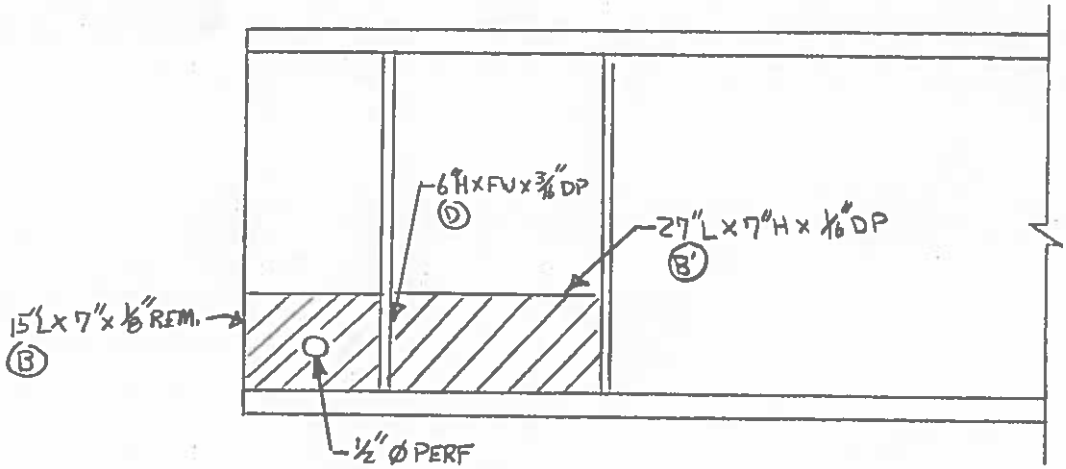

SPAN J, BEAM G4
WEST ELEV. AT P10

REVISION	DATE	CREW	COMPANY	REVISION	DATE	CREW	COMPANY
1				3			
2				4			

Dewberry
59 Elm Street, Suite 101
New Haven, CT 06510

FIELD NOTES

JOB NO.

BRIDGE NO: 03014A

DATE: 7/15/14

SHEET OF

CREW: RFP, PHH

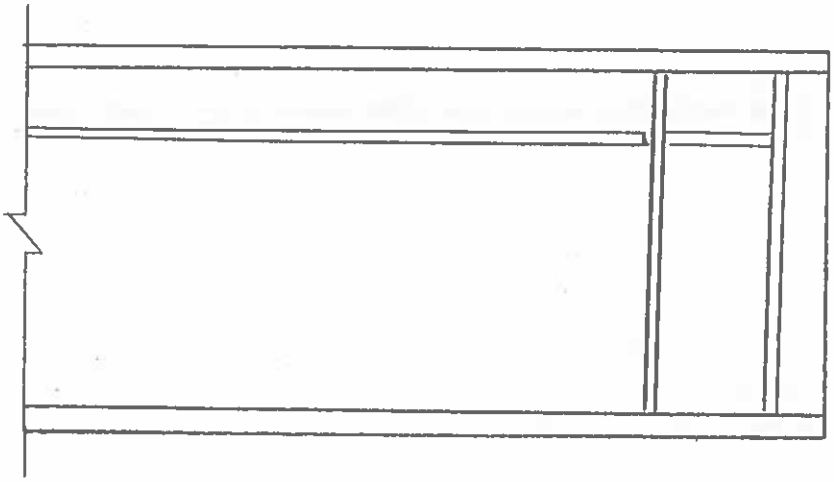

SPAN J, BEAM 5
EAST ELEV. AT P10

• WEB TIPPED EAST 1/8" OVER 2'

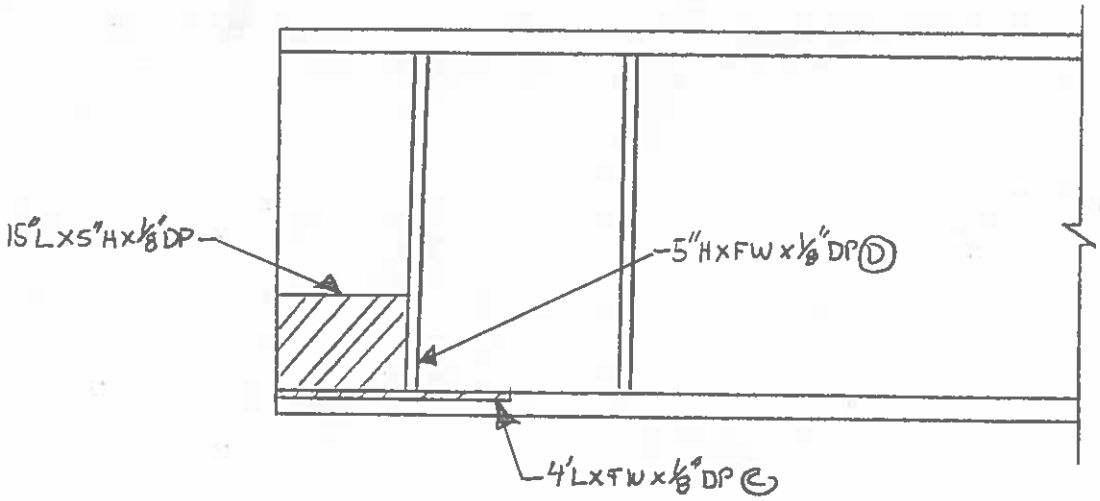

SPAN J, BEAM 5
WEST ELEV. AT P10

REVISION	DATE	CREW	COMPANY	REVISION	DATE	CREW	COMPANY
1				3			
2				4			

Dewberry
59 Elm Street, Suite 101
New Haven, CT 06510

FIELD NOTES

JOB NO.

BRIDGE NO: 03014A

DATE: 7/15/14

SHEET OF

CREW: RFP, PHH

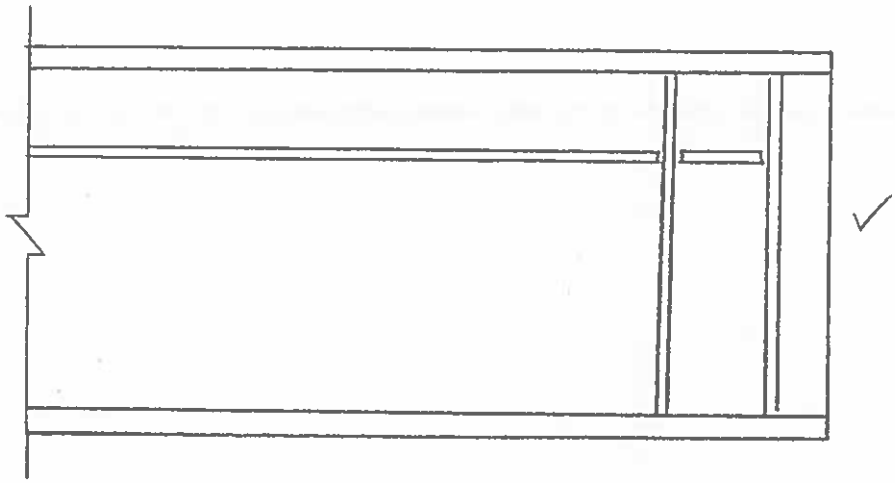

SPAN J, BEAM 66
EAST ELEV. AT P10

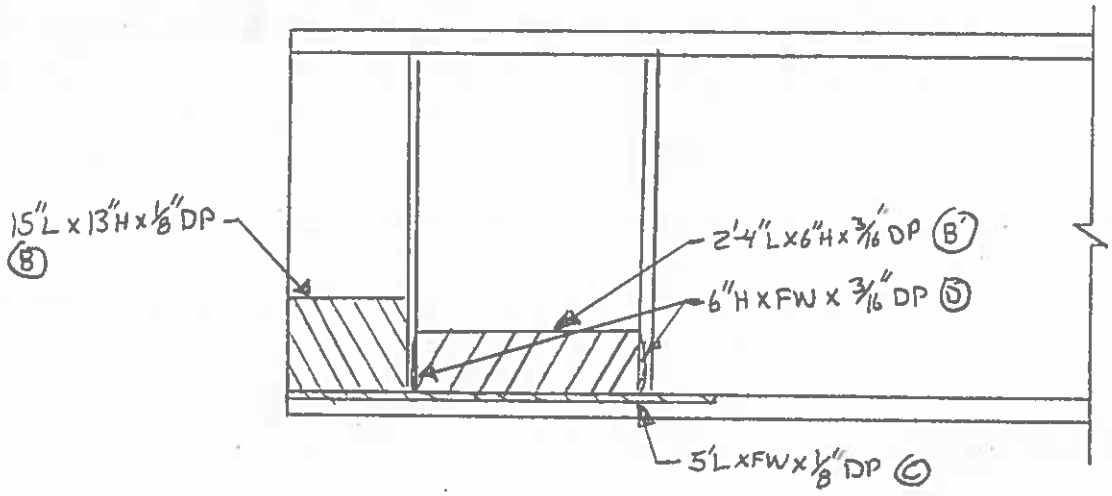

SPAN J, BEAM 66
EAST ELEV. AT P10

REVISION	DATE	CREW	COMPANY	REVISION	DATE	CREW	COMPANY
1				3			
2				4			

Dewberry
59 Elm Street, Suite 101
New Haven, CT 06510

FIELD NOTES

JOB NO.

BRIDGE NO: 03014 A

DATE: 7/15/14

SHEET OF

CREW: RFP, PHH

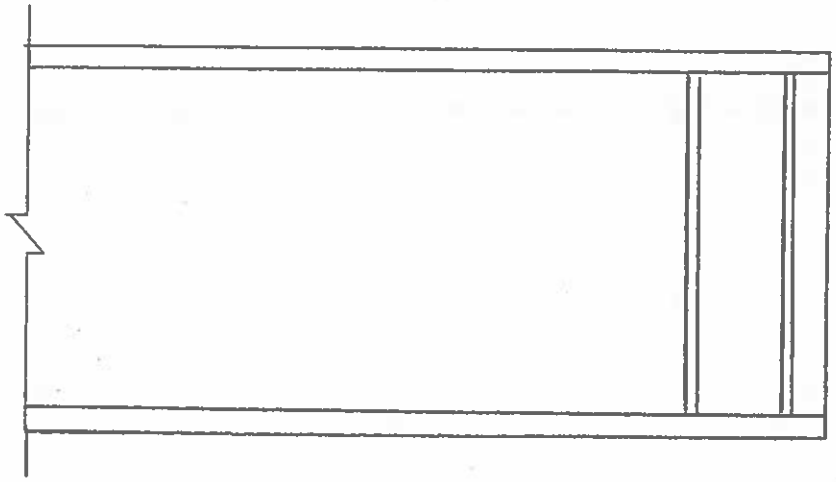

SPAN J, BEAM G7
EAST ELEV. AT P10

• WEB TIPPED 1/8" EAST OVER 2'

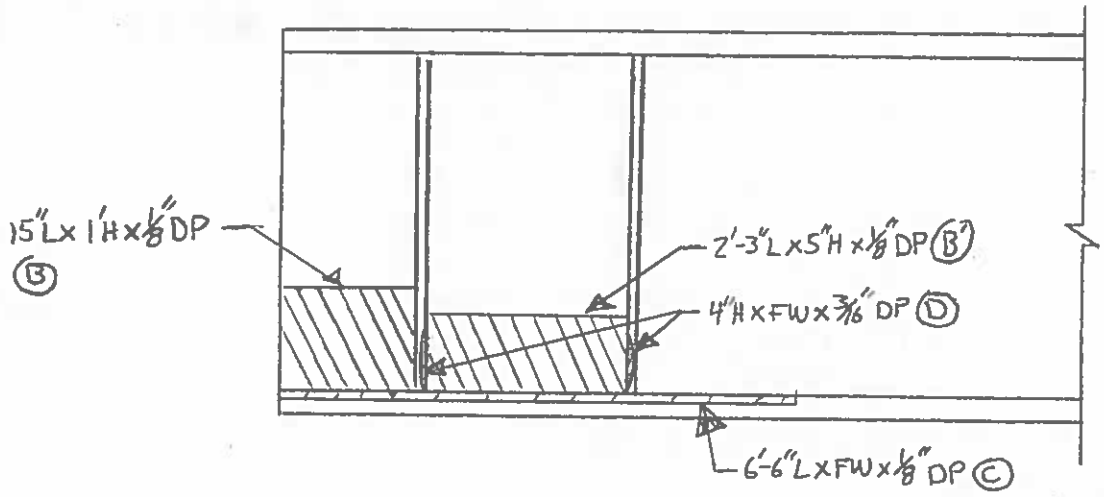

SPAN J, BEAM G7
WEST ELEV. AT P10

REVISION	DATE	CREW	COMPANY	REVISION	DATE	CREW	COMPANY
1				3			
2				4			

Dewberry
59 Elm Street, Suite 101
New Haven, CT 06510

FIELD NOTES

JOB NO.

BRIDGE NO: 03014 A

DATE: 7/15/14

SHEET OF

CREW: RFP, PHH

- WEB TIPPED EAST ¼" OVER 2'

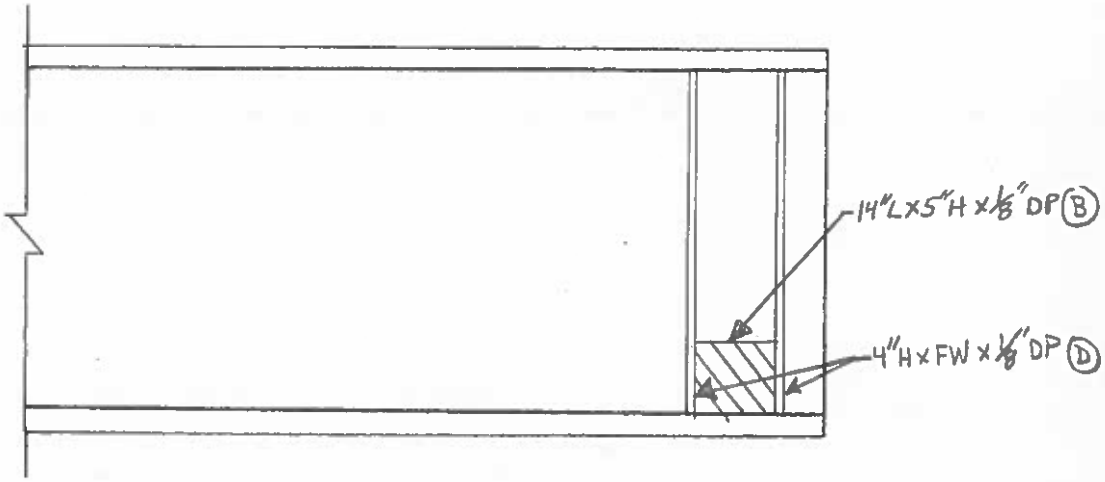

SPAN J, BEAM B
EAST ELEV. AT P10

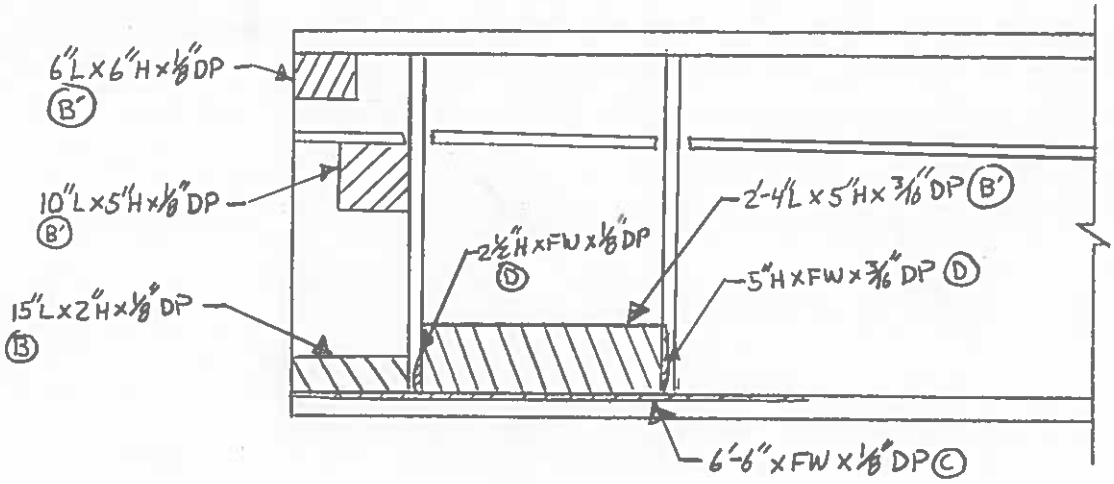

SPAN J, BEAM B
WEST ELEV. AT P10

REVISION	DATE	CREW	COMPANY	REVISION	DATE	CREW	COMPANY
1				3			
2				4			

Dewberry
59 Elm Street, Suite 101
New Haven, CT 06510

FIELD NOTES

JOB NO.

BRIDGE NO: 03014 A

DATE: 7/15/14

SHEET OF

CREW: RFP, PHH

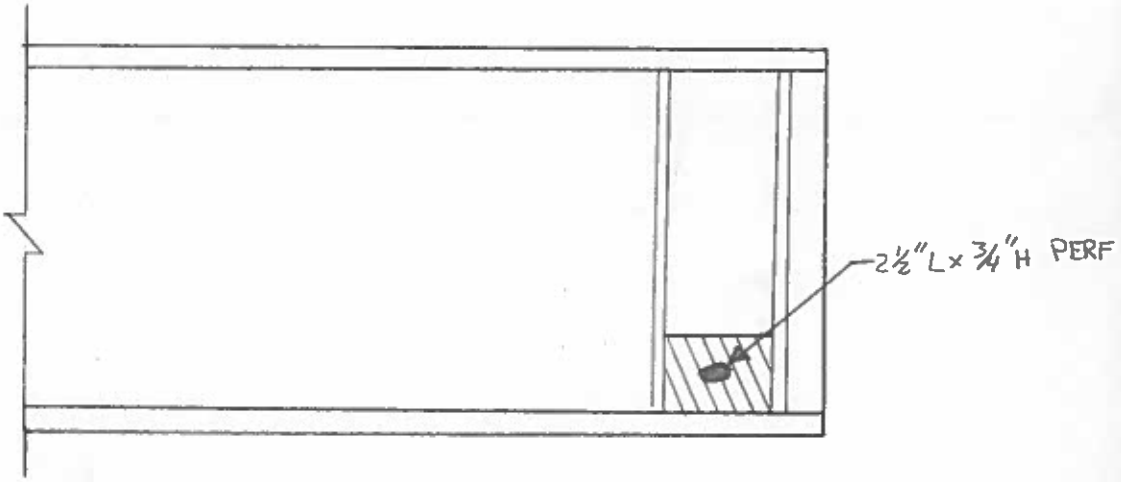

SPAN J, BEAM 9
EAST ELEV. AT P10

• WEB TIPPED EAST ¼" OVER 2'

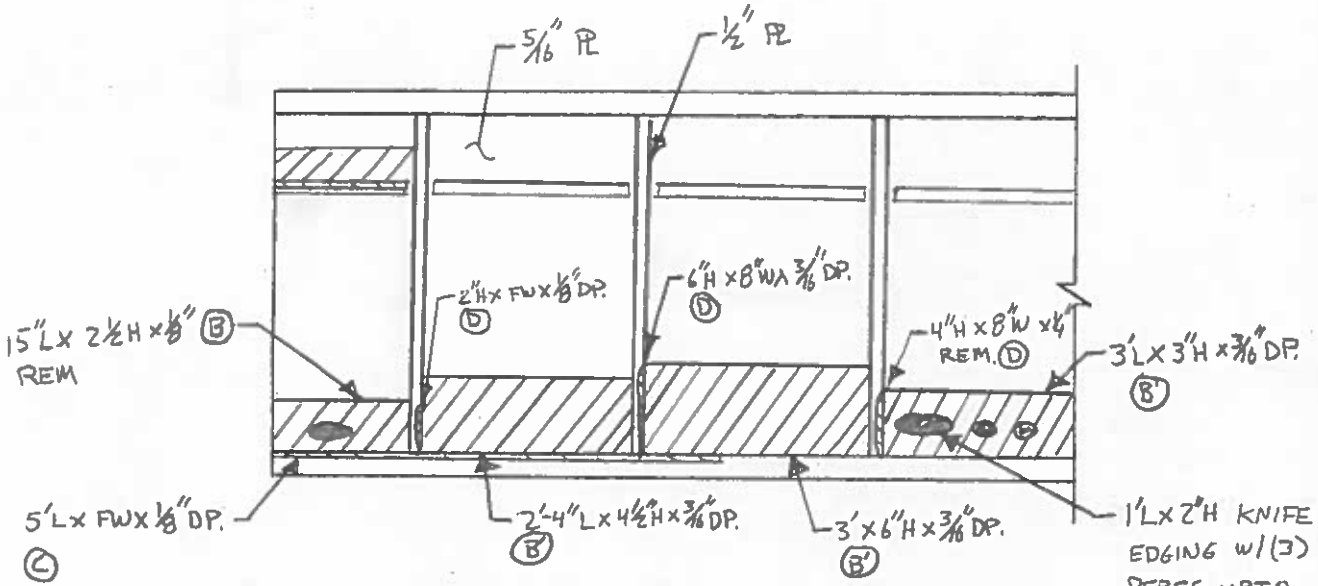

SPAN J, BEAM 9
WEST ELEV. AT P10

REVISION	DATE	CREW	COMPANY	REVISION	DATE	CREW	COMPANY
1				3			
2				4			

Dewberry® 59 Elm Street, Suite 101 New Haven, CT 06510	FIELD NOTES	JOB NO.	BRIDGE NO: 03014 A
		DATE: 7/10/14	SHEET OF
		CREW: RFP, PHH	

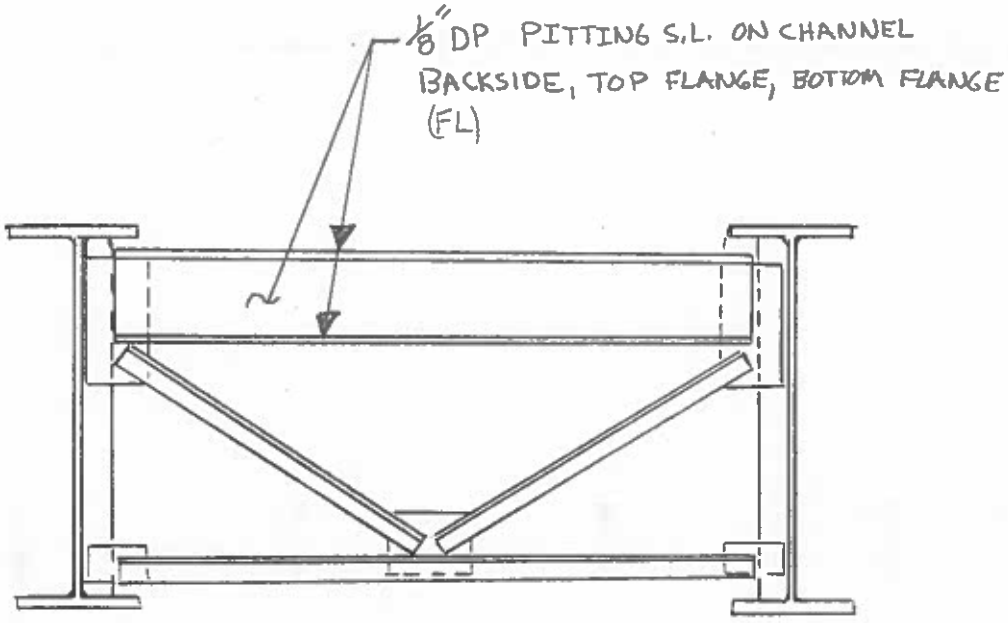

SPAN J @ P9

END DIAPHRAGM BAY 1

REVISION 1	DATE	CREW	COMPANY	REVISION 3	DATE	CREW	COMPANY
REVISION 2	DATE	CREW	COMPANY	REVISION 4	DATE	CREW	COMPANY

Dewberry®	FIELD NOTES	JOB NO.	BRIDGE NO: 03014 A
59 Elm Street, Suite 101 New Haven, CT 06510		DATE: 7/10/2014	SHEET OF
		CREW: RFP, PHH	

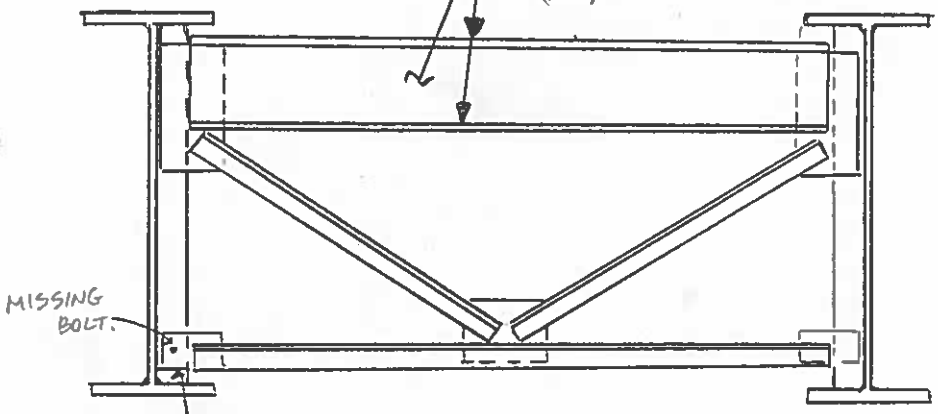

SPAN 5 @ P9

END DIAPHRAGM BAY 2

REVISION 1	DATE	CREW	COMPANY	REVISION 3	DATE	CREW	COMPANY
REVISION 2	DATE	CREW	COMPANY	REVISION 4	DATE	CREW	COMPANY

Dewberry® 59 Elm Street, Suite 101 New Haven, CT 06510	FIELD NOTES	JOB NO.	BRIDGE NO: 03014 A
		DATE: 7/10/14	SHEET OF
		CREW: RFP, PHH	

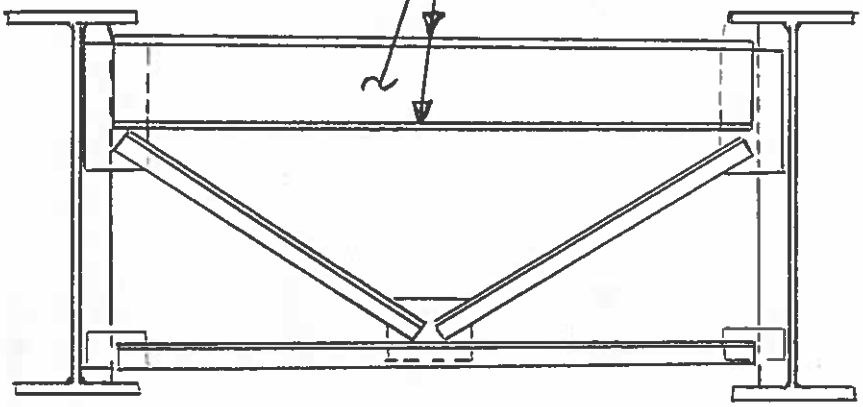

SPAN J @ P9

END DIAPHRAGM BAY 3

REVISION 1	DATE	CREW	COMPANY	REVISION 3	DATE	CREW	COMPANY
REVISION 2	DATE	CREW	COMPANY	REVISION 4	DATE	CREW	COMPANY

Dewberry
59 Elm Street, Suite 101
New Haven, CT 06510

FIELD NOTES

JOB NO.

BRIDGE NO: 03014 A

DATE: 7/10/14

SHEET OF

CREW: RFP, PHH

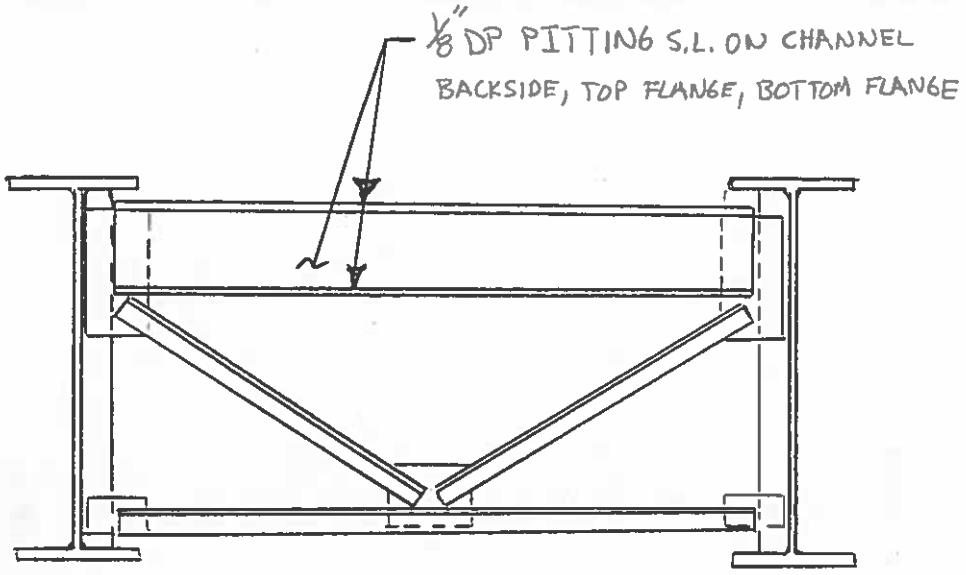

SPAN J @ P9

END DIAPHRAGM BAY 4

REVISION	DATE	CREW	COMPANY	REVISION	DATE	CREW	COMPANY
1				3			
2				4			

SPAN K

FIELD NOTES

PREPARED BY: Garg Consulting Services, Inc.	PROJ. NO. 170-3013	BRIDGE NO. 3014A
	DATE: 09/13/2010	SHEET 58 56
	CREW: PDG, MD	

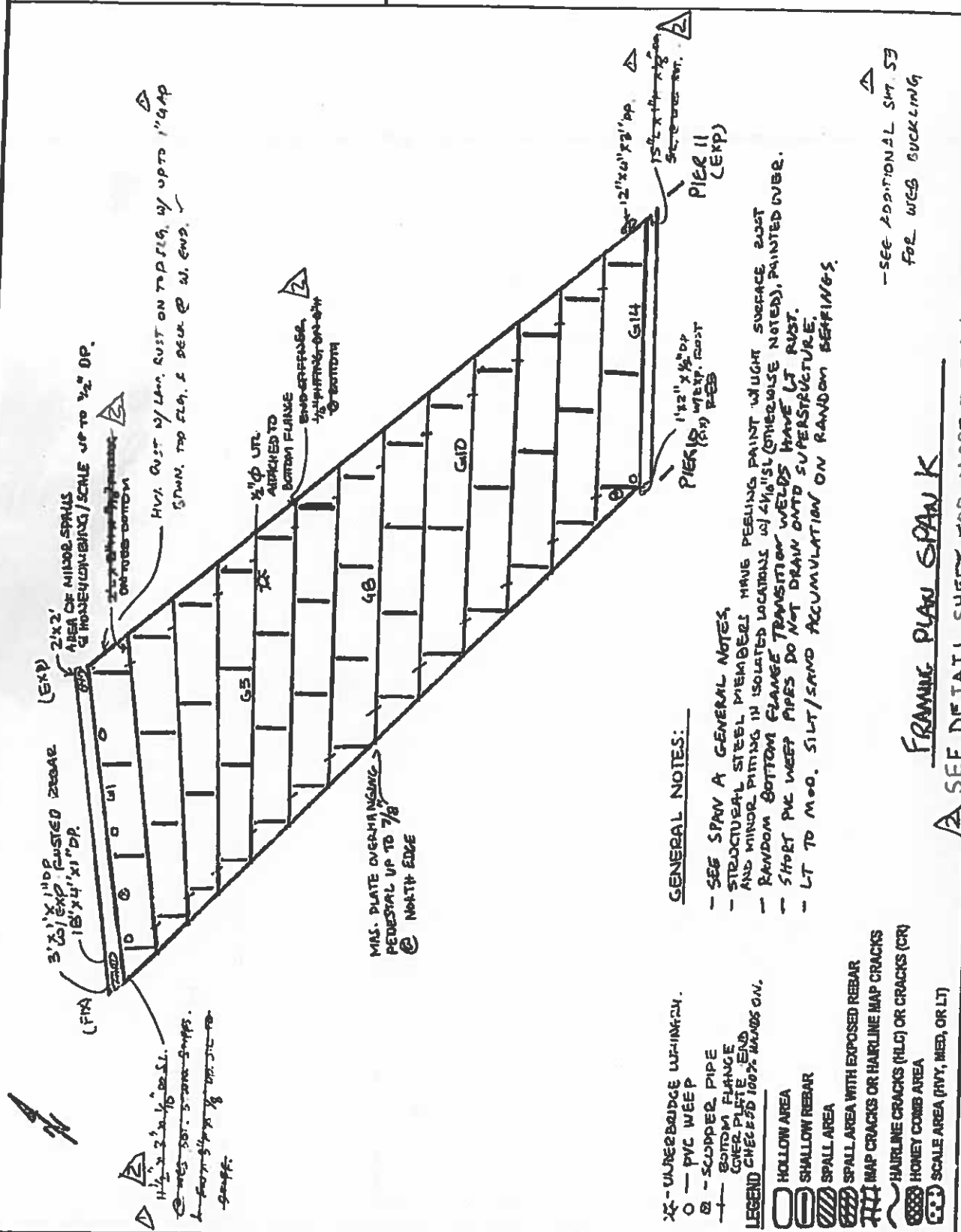

Revision	Date	Crew	Company	Revision	Date	Crew	Company
1	9/4/12	PKG, AKC	GM2				
2	7/15/14	RFP, PHH	DEW				

Dewberry
59 Elm Street, Suite 101
New Haven, CT 06510

FIELD NOTES	JOB NO.	BRIDGE NO: 03014 A
	DATE: 7/15/14	SHEET OF
	CREW: RFP, PHH	

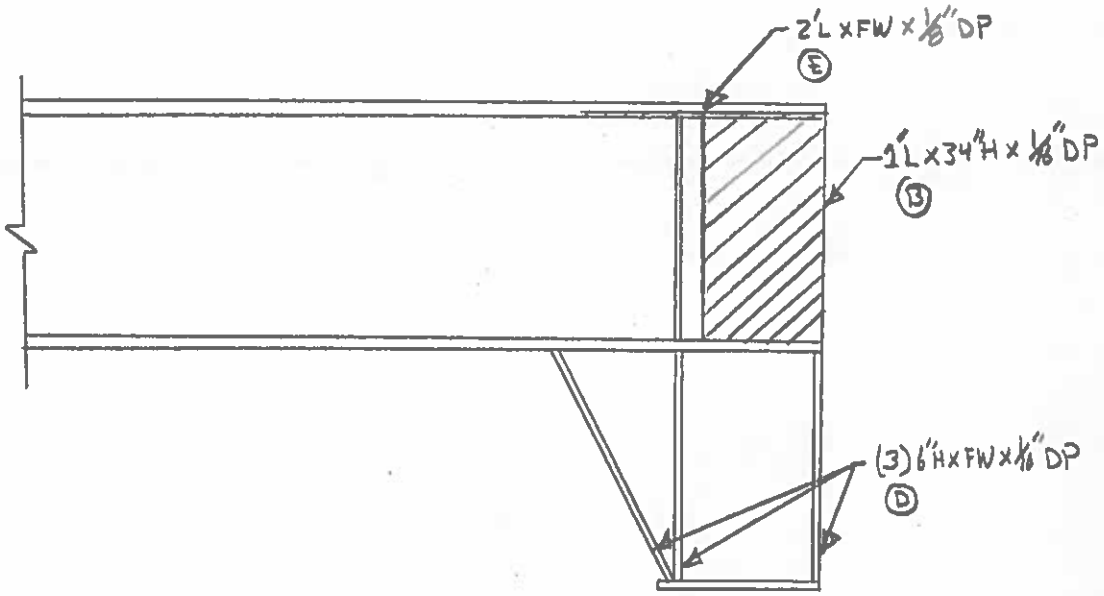

SPAN K, GIRDER 1
WEST ELEV. AT P10

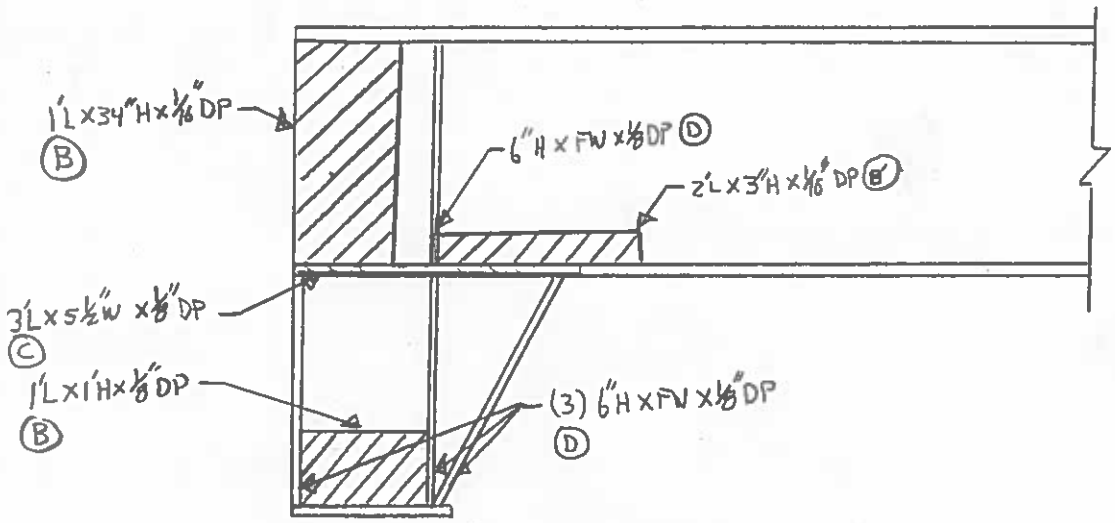

SPAN K, GIRDER 1
EAST ELEV. AT P10

REVISION 1	DATE	CREW	COMPANY	REVISION 3	DATE	CREW	COMPANY
REVISION 2	DATE	CREW	COMPANY	REVISION 4	DATE	CREW	COMPANY

Dewberry® 59 Elm Street, Suite 101 New Haven, CT 06510	FIELD NOTES	JOB NO.	BRIDGE NO: 03014 A
		DATE: 7/15/14	SHEET OF
		CREW: RFP, PHA	

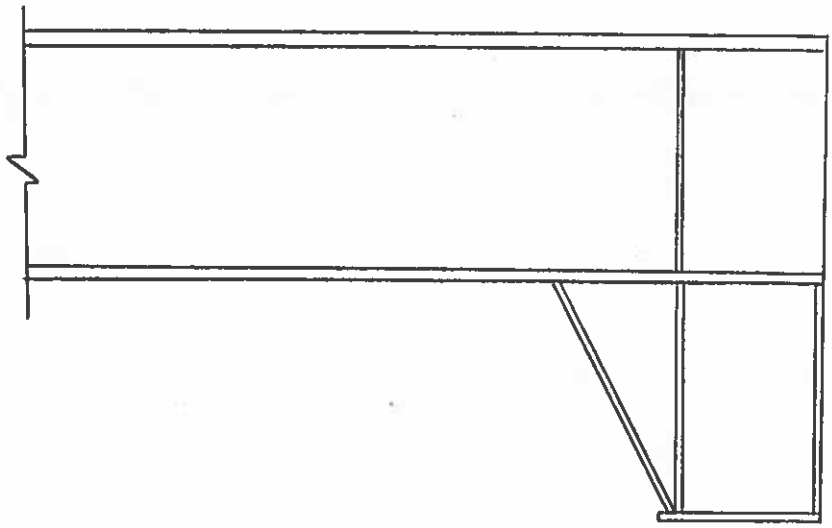

SPAN K, GIRDER 2
WEST ELEV. AT P10

- TIPPED WEST 3/16" OVER 2'

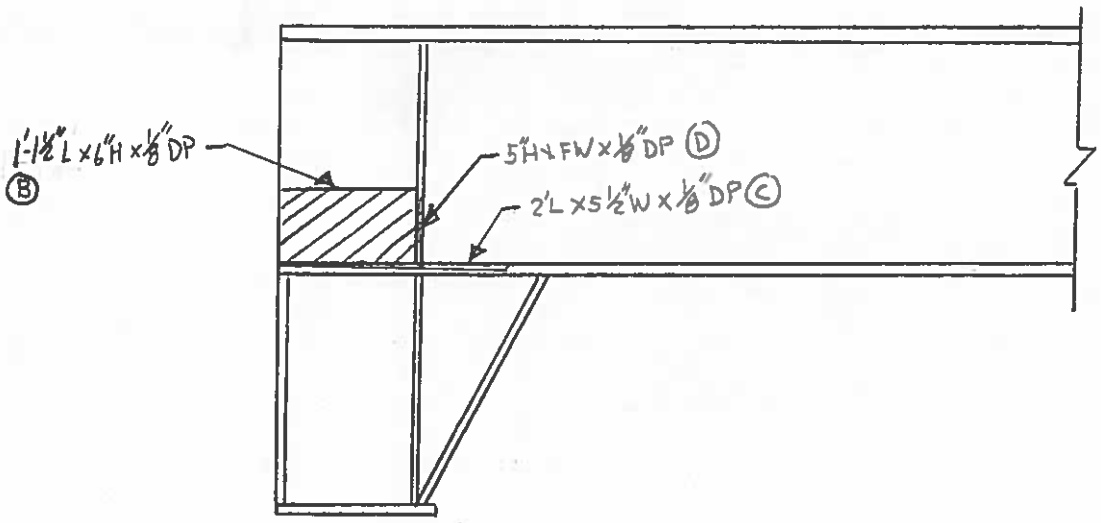

SPAN K, GIRDER 2
EAST ELEV. AT P10

REVISION 1	DATE	CREW	COMPANY	REVISION 3	DATE	CREW	COMPANY
REVISION 2	DATE	CREW	COMPANY	REVISION 4	DATE	CREW	COMPANY

Dewberry® 59 Elm Street, Suite 101 New Haven, CT 06510	FIELD NOTES	JOB NO.	BRIDGE NO: 03014 A
		DATE: 7/15/14	SHEET OF
		CREW: RFP, PHH	

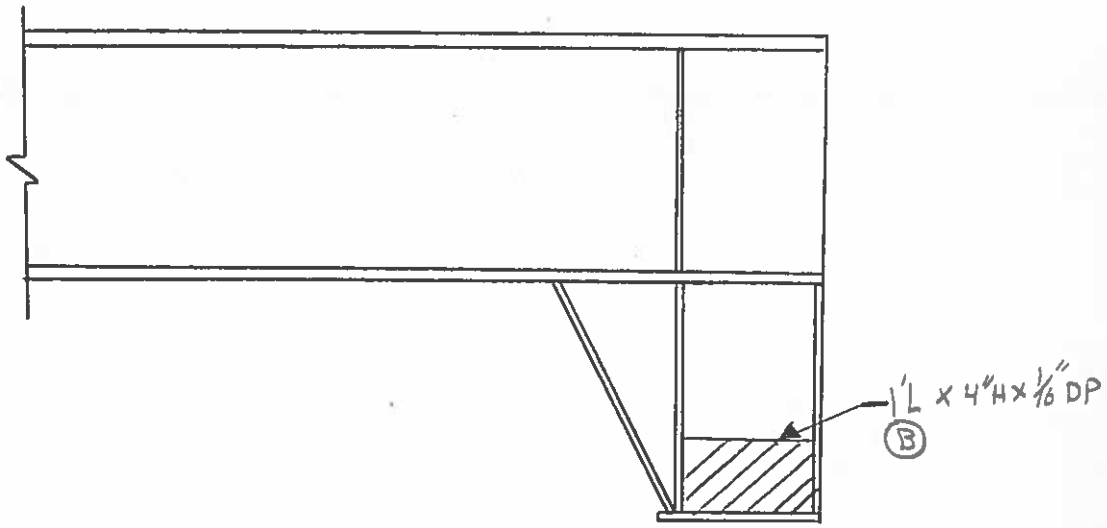

SPAN K, GIRDER 3
WEST ELEV. AT P10

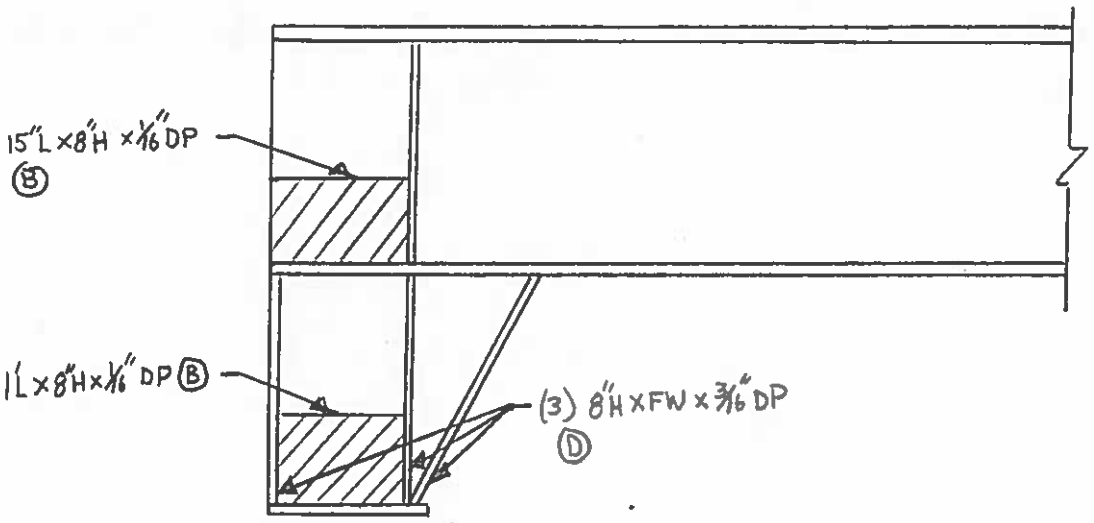

SPAN K, GIRDER 3
EAST ELEV. AT P10

REVISION 1 DATE	CREW	COMPANY	REVISION 3 DATE	CREW	COMPANY
REVISION 2 DATE	CREW	COMPANY	REVISION 4 DATE	CREW	COMPANY

Dewberry® 59 Elm Street, Suite 101 New Haven, CT 06510	FIELD NOTES	JOB NO.	BRIDGE NO: 03014 A
		DATE: 7/15/14	SHEET OF
		CREW: RFP, PHH	

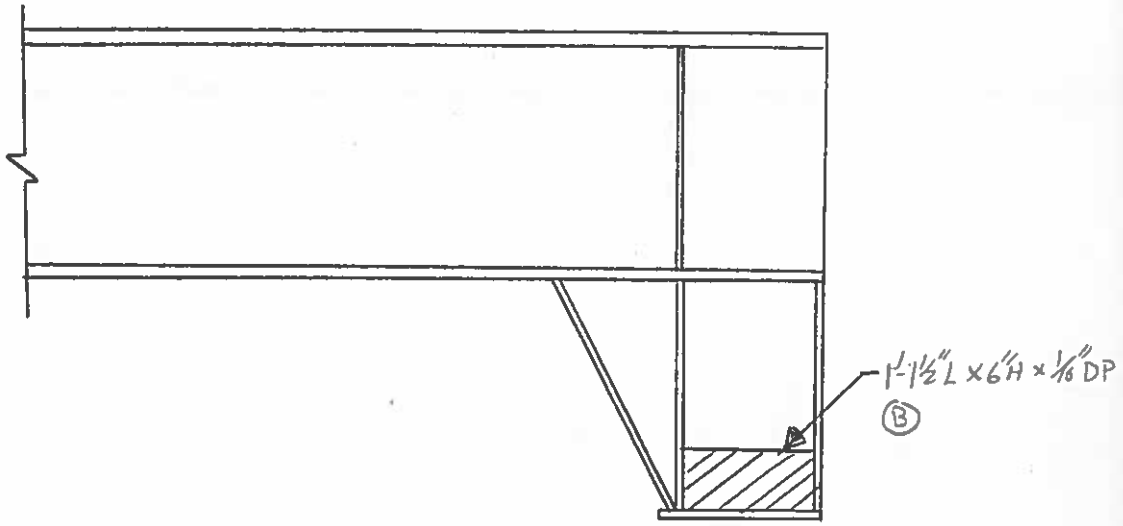

SPAN K, GIRDER 4

WEST ELEV. AT P10

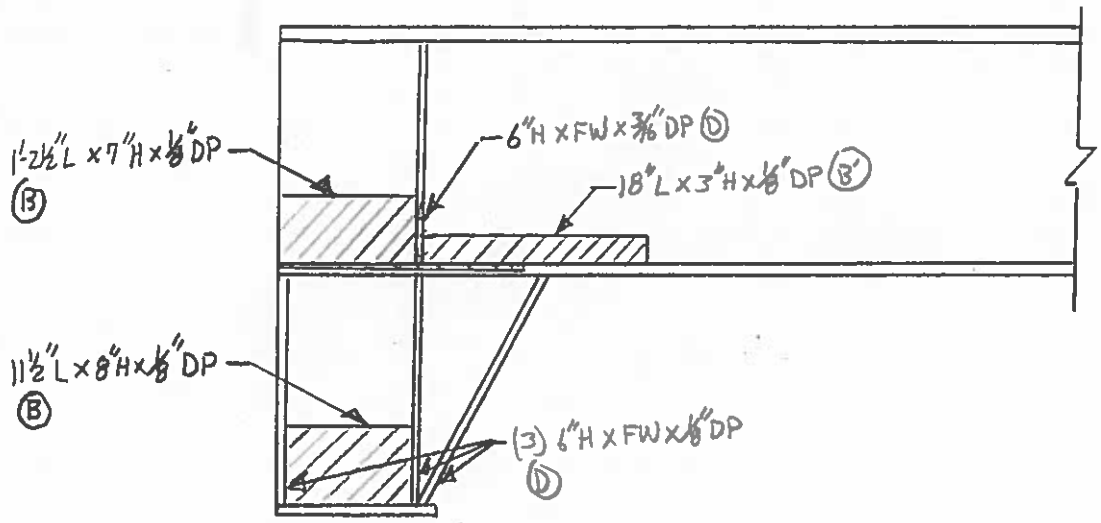

SPAN K, GIRDER 4

EAST ELEV. AT P10

REVISION 1	DATE	CREW	COMPANY	REVISION 3	DATE	CREW	COMPANY
REVISION 2	DATE	CREW	COMPANY	REVISION 4	DATE	CREW	COMPANY

Dewberry® 59 Elm Street, Suite 101 New Haven, CT 06510	FIELD NOTES	JOB NO.	BRIDGE NO: 03014 A
		DATE: 7/15/14	SHEET OF
		CREW: RFP, PHH	

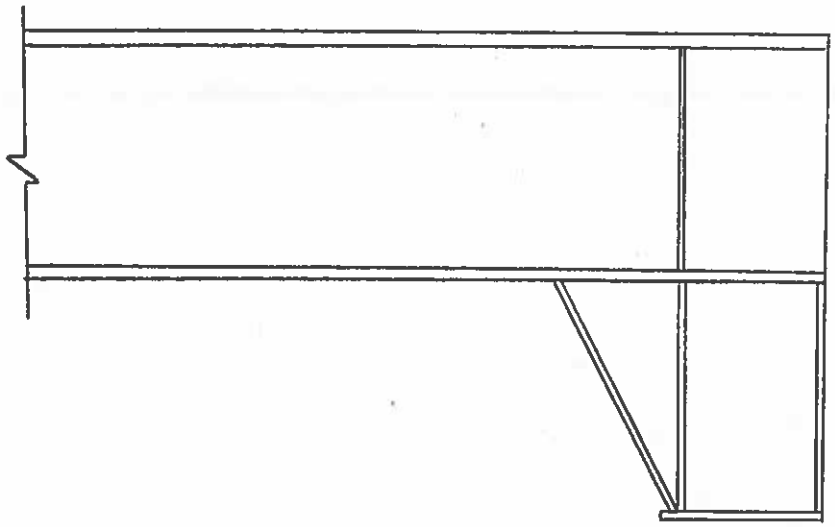

SPAN K, GIRDER 5
WEST ELEV. AT P10

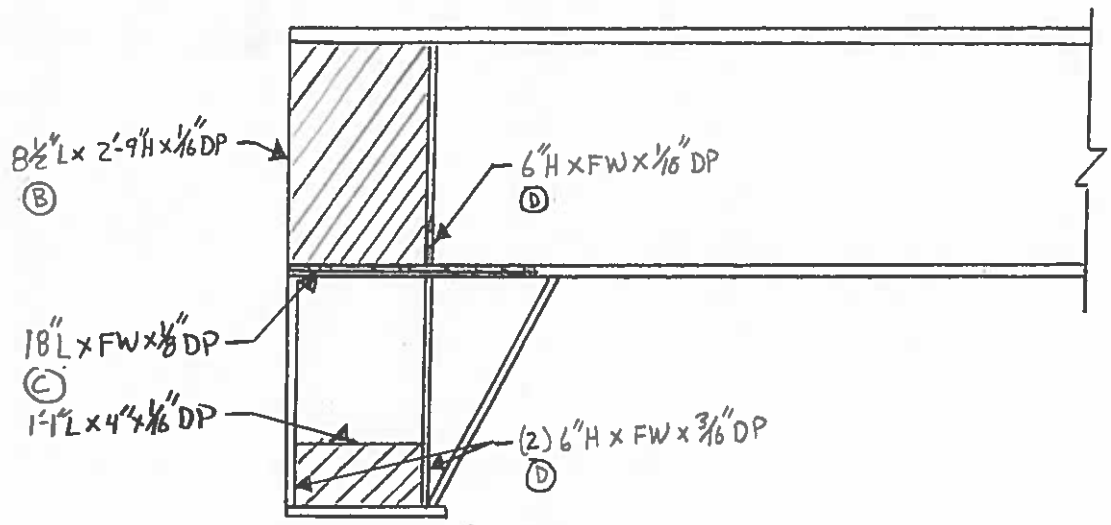

SPAN K, GIRDER 5
EAST ELEV. AT P10

REVISION 1	DATE	CREW	COMPANY	REVISION 3	DATE	CREW	COMPANY
REVISION 2	DATE	CREW	COMPANY	REVISION 4	DATE	CREW	COMPANY

Dewberry® 59 Elm Street, Suite 101 New Haven, CT 06510	FIELD NOTES	JOB NO.	BRIDGE NO: 03014 A
		DATE: 7/15/14	SHEET OF
		CREW: RFP, PHH	

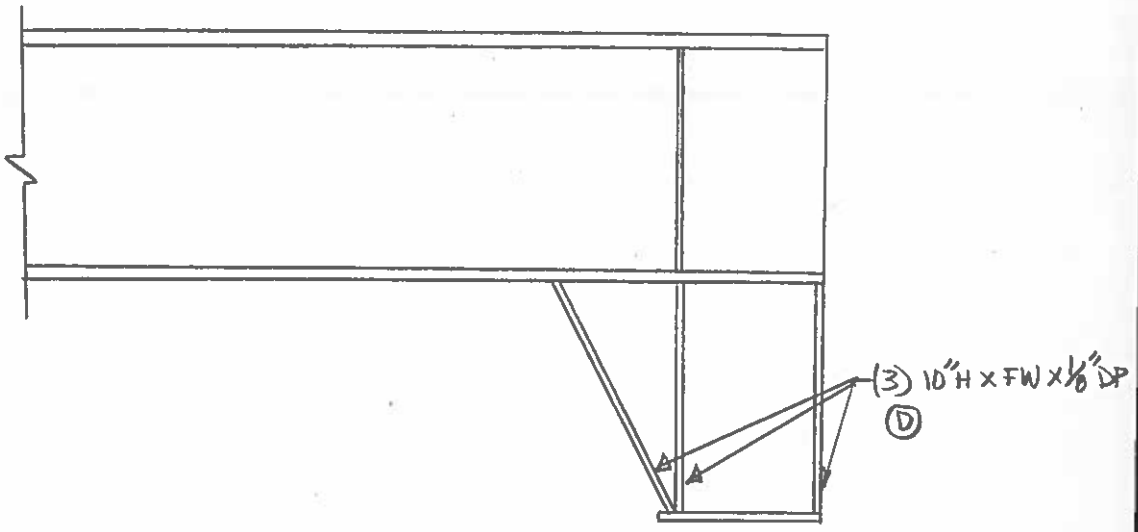

SPAN K, GIRDER 6
WEST ELEV. AT P10

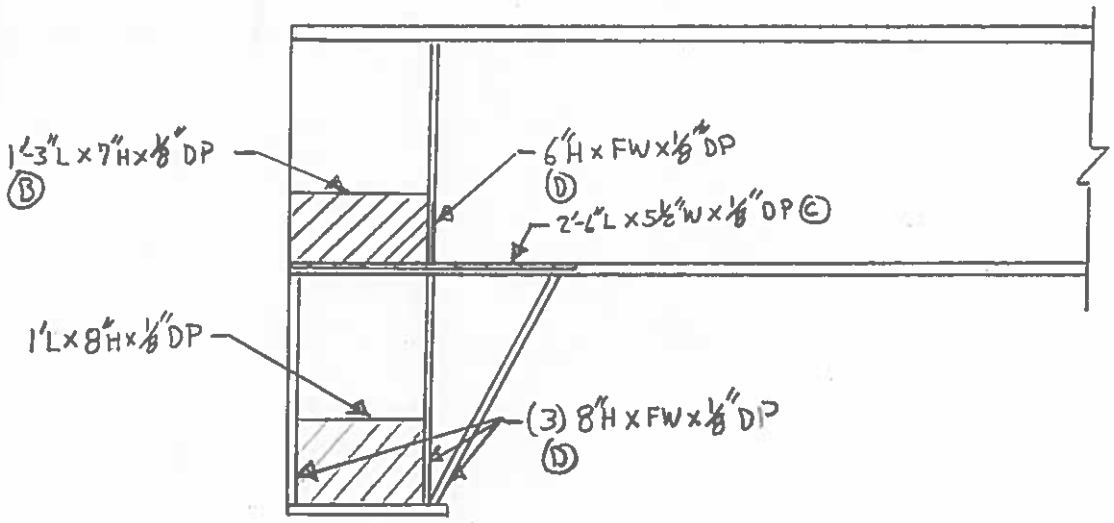

SPAN K, GIRDER 6
EAST ELEV. AT P10

REVISION 1 DATE	CREW	COMPANY	REVISION 3 DATE	CREW	COMPANY
REVISION 2 DATE	CREW	COMPANY	REVISION 4 DATE	CREW	COMPANY

Dewberry
59 Elm Street, Suite 101
New Haven, CT 06510

FIELD NOTES

JOB NO.

BRIDGE NO: 03014 A

DATE: 7/15/14

SHEET OF

CREW: RFP, PHH

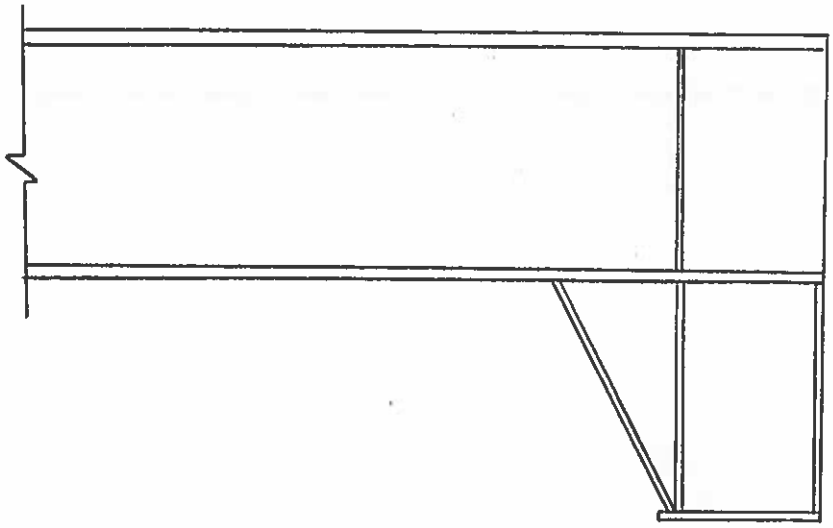

SPAN K, GIRDER 7
WEST ELEV. AT P10

- WEB TIPPED 1/8" EAST OVER 2"

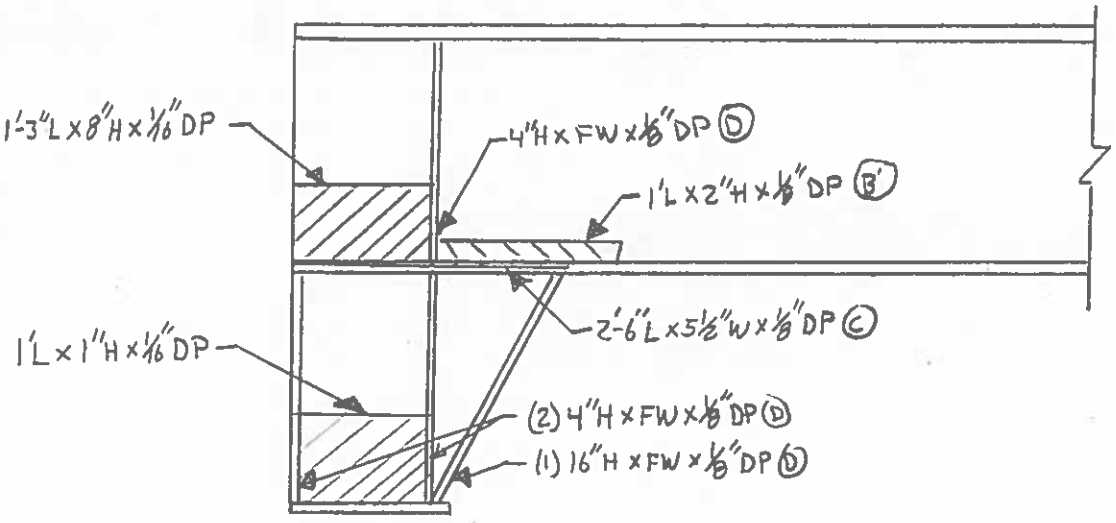

SPAN K, GIRDER 7
EAST ELEV. AT P10

REVISION 1	DATE	CREW	COMPANY	REVISION 3	DATE	CREW	COMPANY
REVISION 2	DATE	CREW	COMPANY	REVISION 4	DATE	CREW	COMPANY

Dewberry	FIELD NOTES	JOB NO.	BRIDGE NO: 03014 A
59 Elm Street, Suite 101 New Haven, CT 06510		DATE: 7/15/14	SHEET OF
		CREW: RFP, PHH	

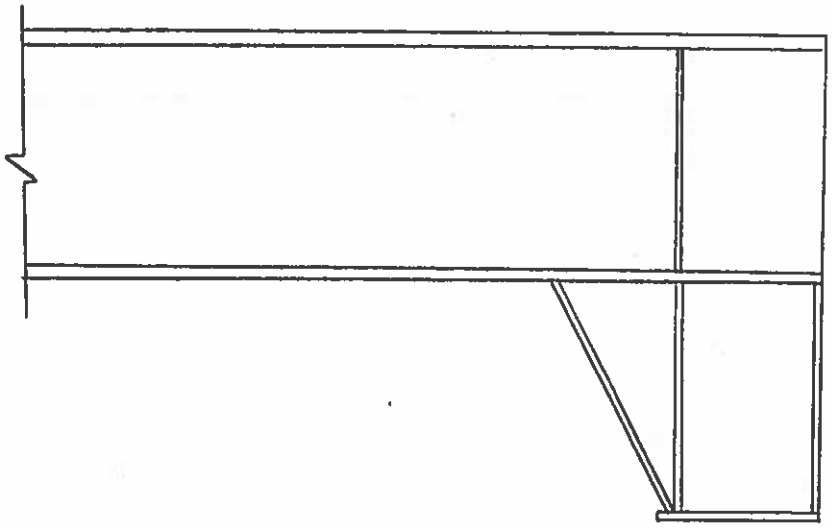

SPAN K, GIRDER B
WEST ELEV. AT P10

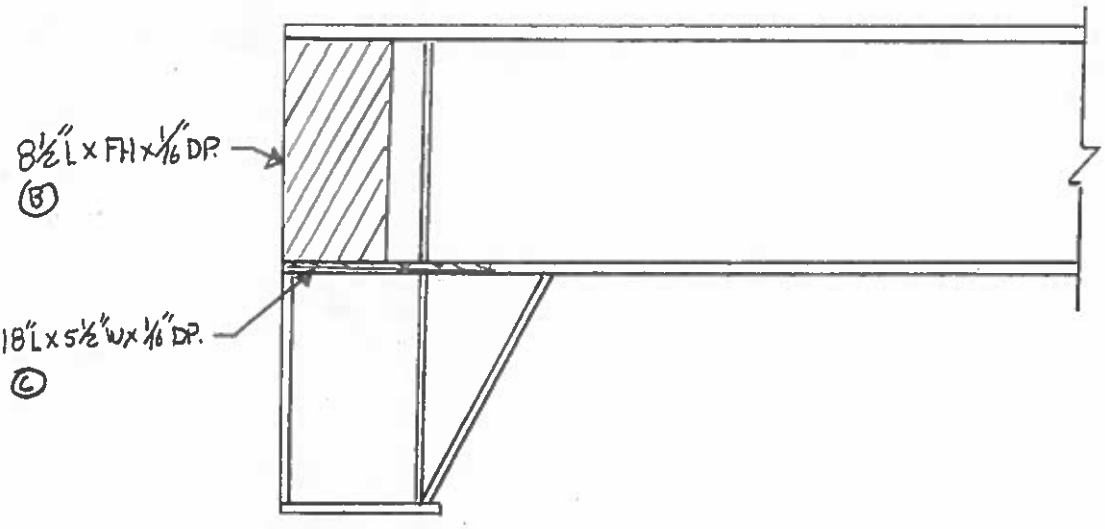

SPAN K, GIRDER B
EAST ELEV. AT P10

REVISION 1	DATE	CREW	COMPANY	REVISION 3	DATE	CREW	COMPANY
REVISION 2	DATE	CREW	COMPANY	REVISION 4	DATE	CREW	COMPANY

Dewberry® 59 Elm Street, Suite 101 New Haven, CT 06510	FIELD NOTES	JOB NO.	BRIDGE NO: 03014 A
		DATE: 7/15/14	SHEET OF
		CREW: RFP, PHH	

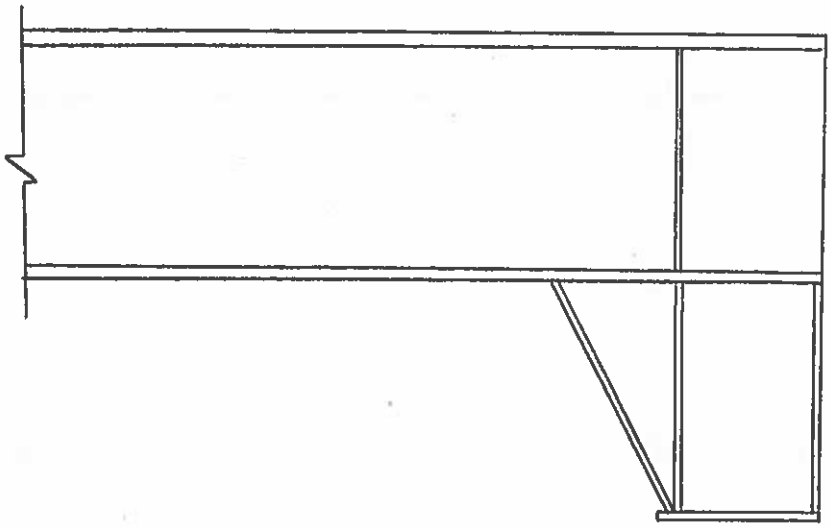

SPAN K, GIRDER 9
WEST ELEV. AT P10

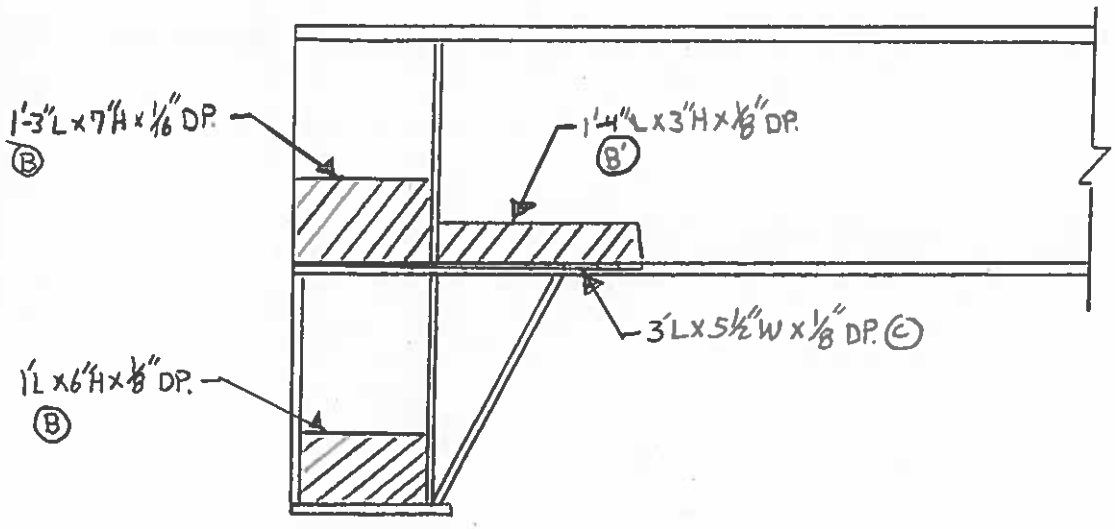

SPAN K, GIRDER 9
EAST ELEV. AT P10

REVISION 1 DATE	CREW	COMPANY	REVISION 3 DATE	CREW	COMPANY
REVISION 2 DATE	CREW	COMPANY	REVISION 4 DATE	CREW	COMPANY

Dewberry® 59 Elm Street, Suite 101 New Haven, CT 06510	FIELD NOTES	JOB NO.	BRIDGE NO: 03014 A
		DATE: 7/15/14	SHEET OF
		CREW: RFP, PHH	

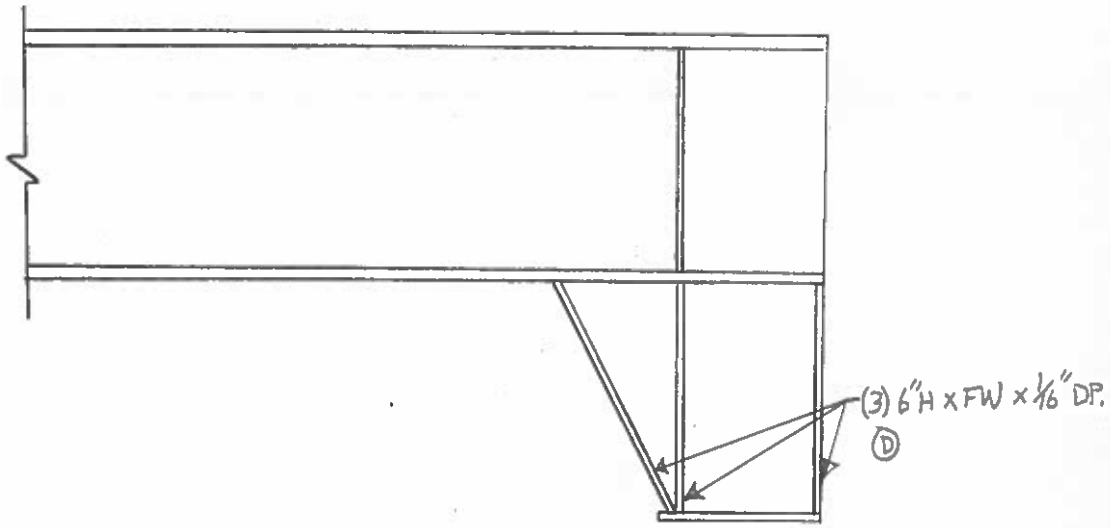

SPAN K, GIRDER 10
WEST ELEV. AT P10

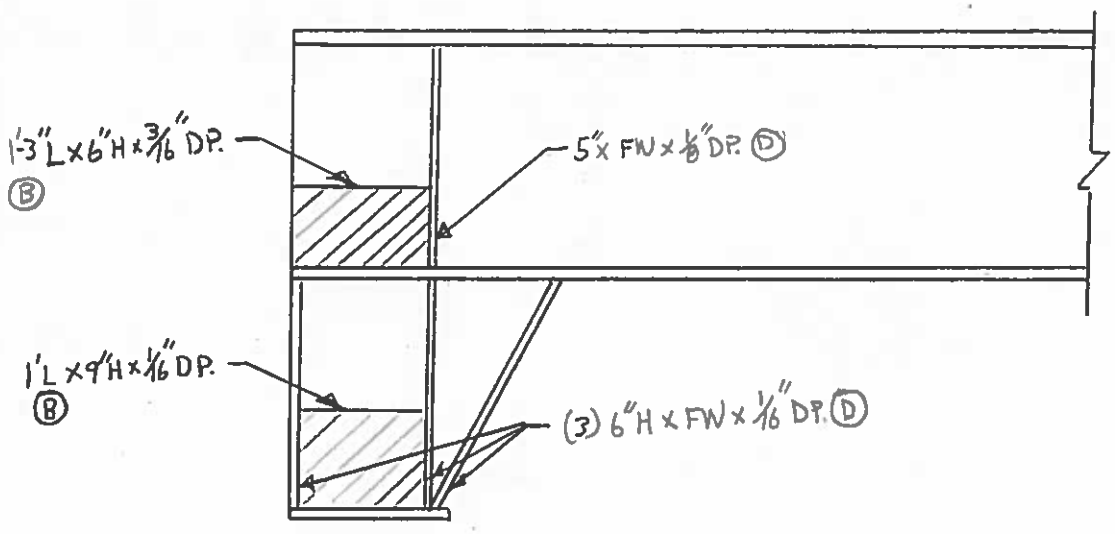

SPAN K, GIRDER 10
EAST ELEV. AT P10

REVISION 1	DATE	CREW	COMPANY	REVISION 3	DATE	CREW	COMPANY
REVISION 2	DATE	CREW	COMPANY	REVISION 4	DATE	CREW	COMPANY

Dewberry
59 Elm Street, Suite 101
New Haven, CT 06510

FIELD NOTES

JOB NO.

BRIDGE NO: 03014 A

DATE: 7/15/14

SHEET OF

CREW: RFP, PHH

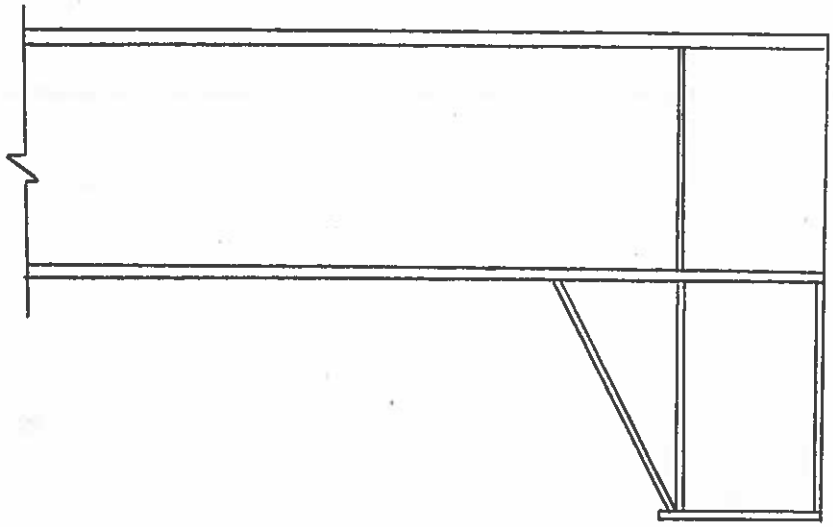

✓

SPAN K, GIRDER 11
WEST ELEV. AT P10

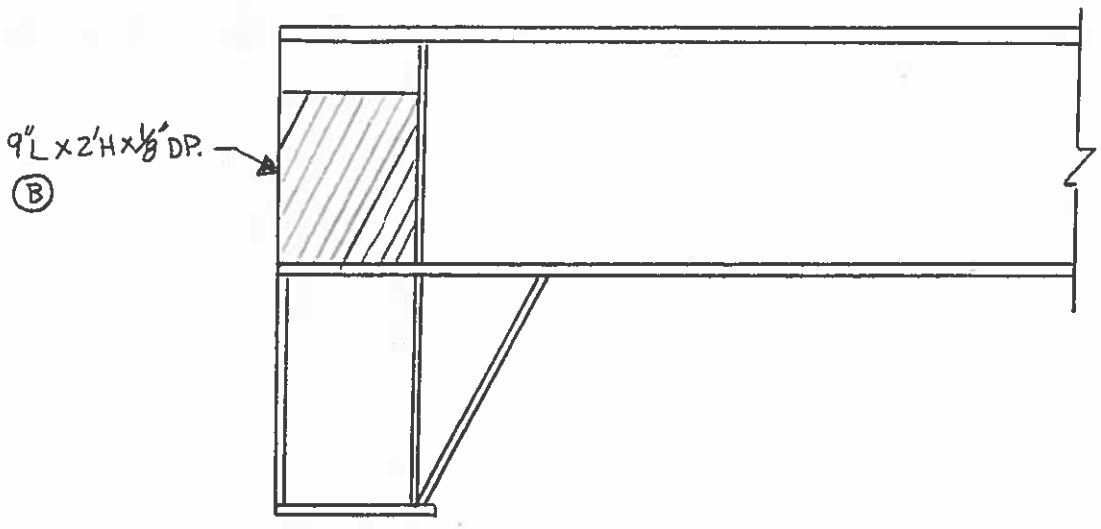

SPAN K, GIRDER 11
EAST ELEV. AT P10

REVISION 1	DATE	CREW	COMPANY	REVISION 3	DATE	CREW	COMPANY
REVISION 2	DATE	CREW	COMPANY	REVISION 4	DATE	CREW	COMPANY

Dewberry	FIELD NOTES	JOB NO.	BRIDGE NO: 03014 A
59 Elm Street, Suite 101 New Haven, CT 06510		DATE: 7/15/14	SHEET OF
		CREW: RFP, PHH	

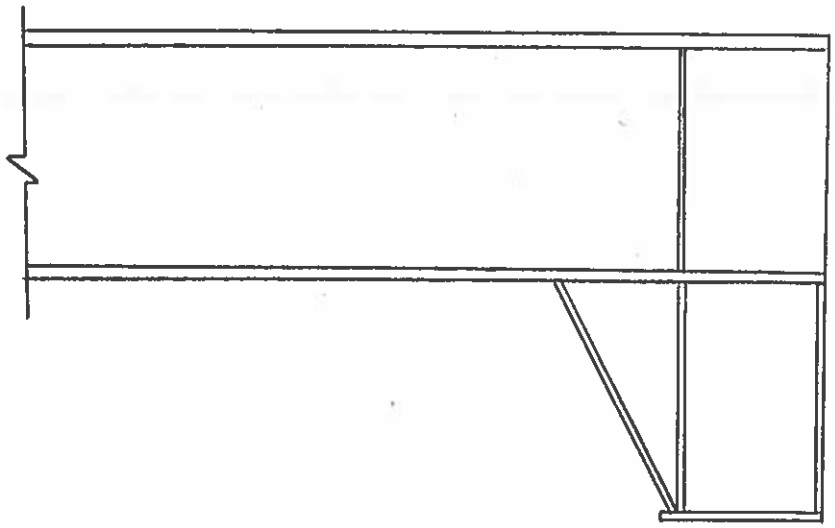

SPAN K, GIRDER 12
WEST ELEV. AT P10

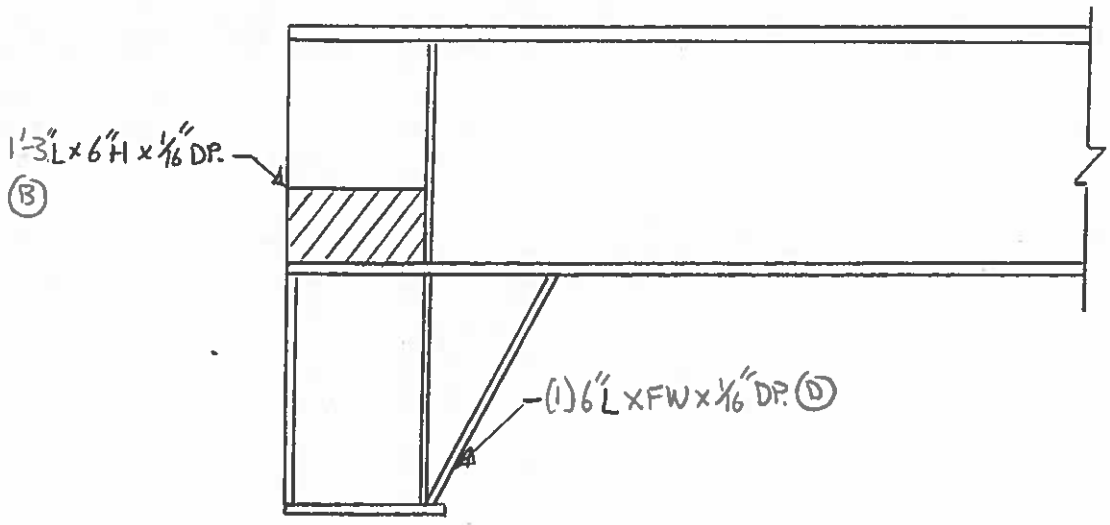

SPAN K, GIRDER 12
EAST ELEV. AT P10

REVISION 1	DATE	CREW	COMPANY	REVISION 3	DATE	CREW	COMPANY
REVISION 2	DATE	CREW	COMPANY	REVISION 4	DATE	CREW	COMPANY

Dewberry® 59 Elm Street, Suite 101 New Haven, CT 06510	FIELD NOTES	JOB NO.	BRIDGE NO: 03014 A
		DATE: 7/15/14	SHEET OF
		CREW: RFP, PHH	

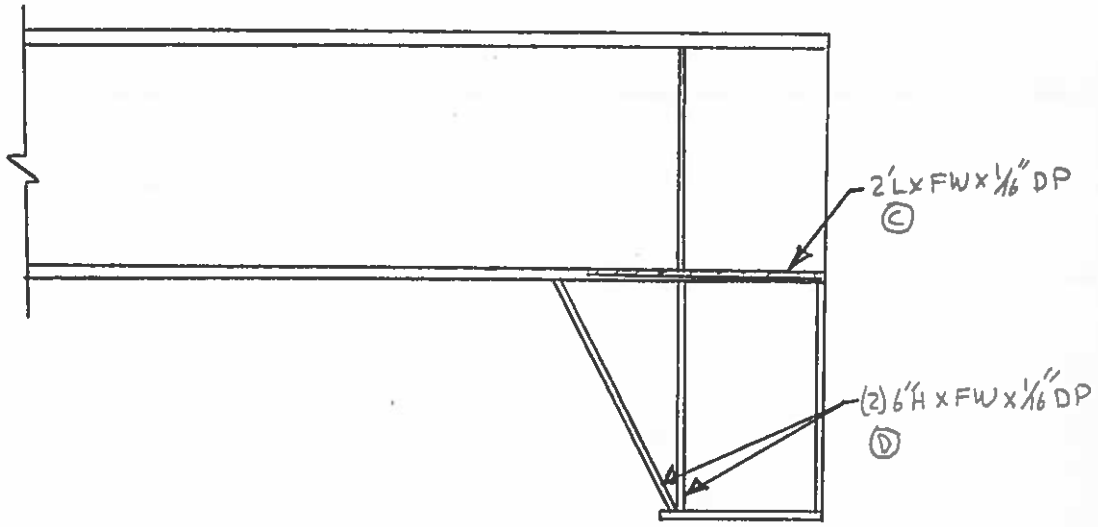

SPAN K, GIRDER 13
WEST ELEV. AT P10

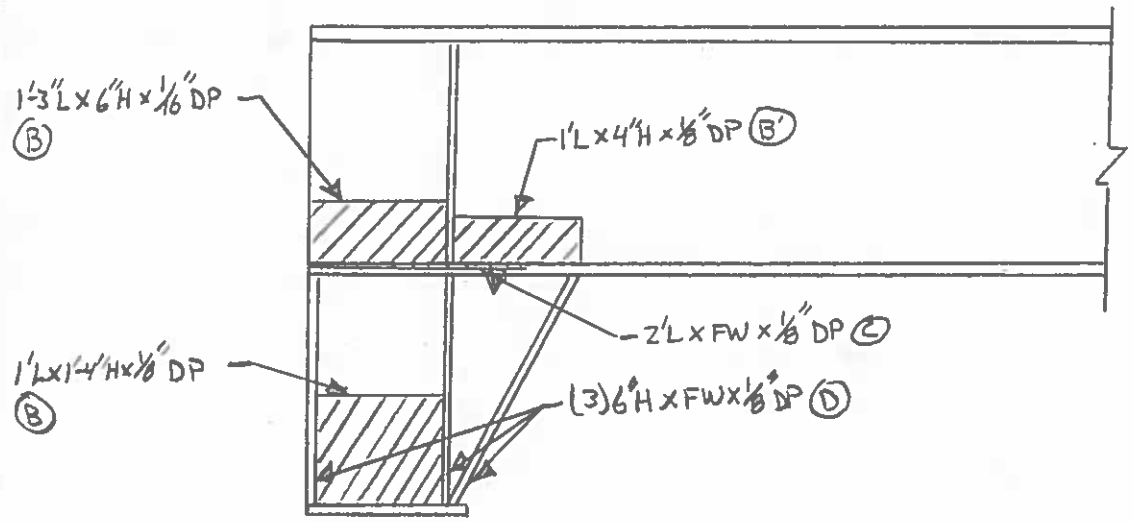

SPAN K, GIRDER 13
EAST ELEV. AT P10

REVISION 1	DATE	CREW	COMPANY	REVISION 3	DATE	CREW	COMPANY
REVISION 2	DATE	CREW	COMPANY	REVISION 4	DATE	CREW	COMPANY

Dewberry
59 Elm Street, Suite 101
New Haven, CT 06510

FIELD NOTES	JOB NO.	BRIDGE NO: 03014 A
	DATE: 7/15/14	SHEET OF
	CREW: RFP, PHH	

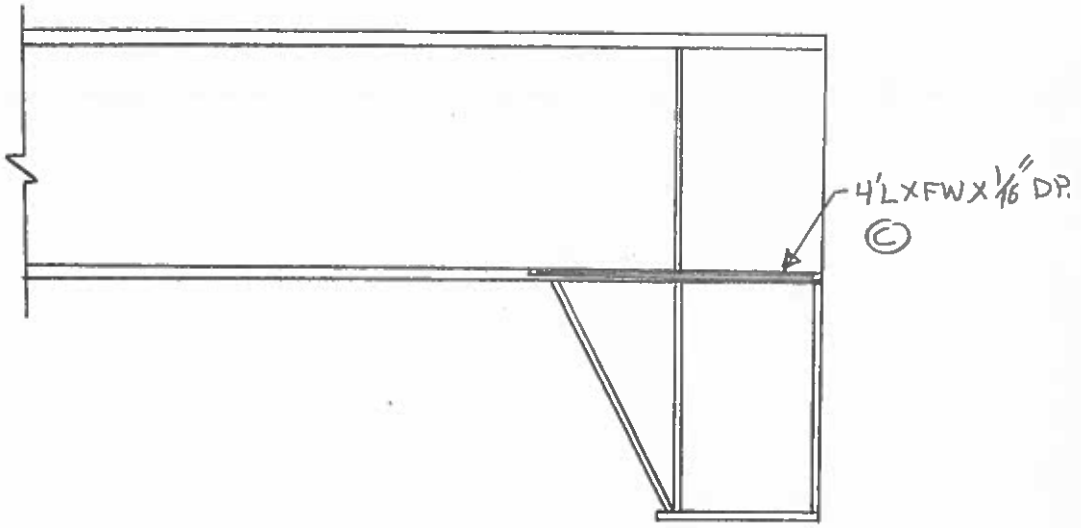

SPAN K, GIRDER 14
WEST ELEV. AT P10

• WEB TIPPED EAST 1/8" OVER 2'

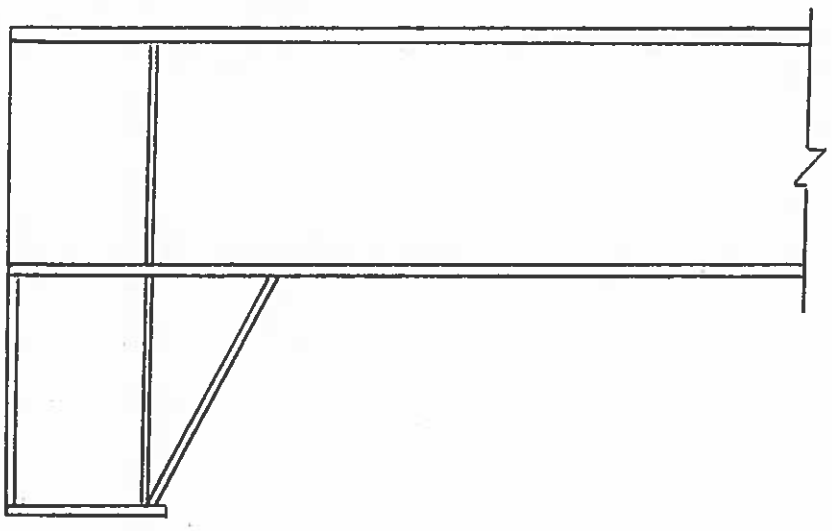

SPAN K, GIRDER 14
EAST ELEV. AT P10

REVISION 1	DATE	CREW	COMPANY	REVISION 3	DATE	CREW	COMPANY
REVISION 2	DATE	CREW	COMPANY	REVISION 4	DATE	CREW	COMPANY

Dewberry
59 Elm Street, Suite 101
New Haven, CT 06510

FIELD NOTES	JOB NO.	BRIDGE NO: 03014 A
	DATE: 7/15/14	SHEET OF
	CREW: RFP, PHH	

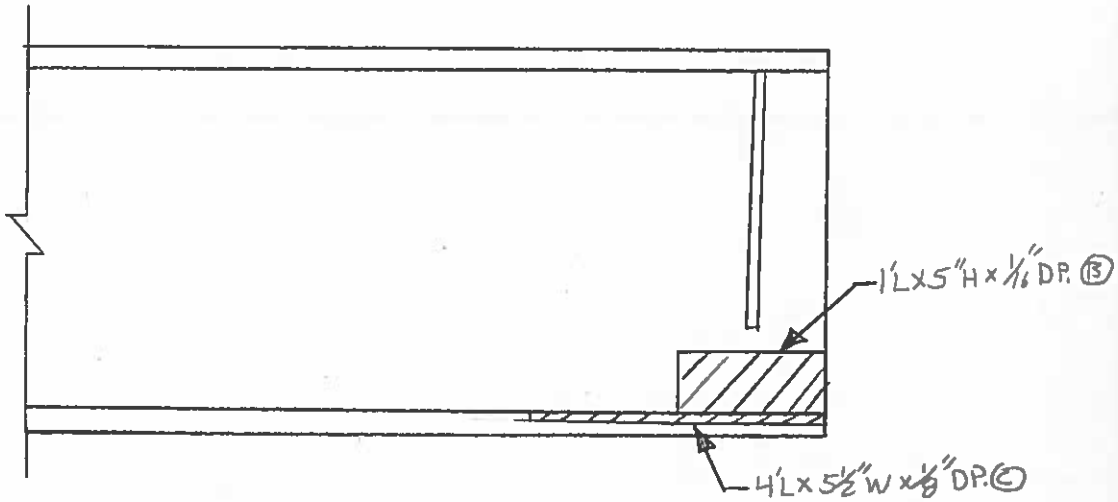

SPAN K, BEAM 1
EAST ELEV. AT P11

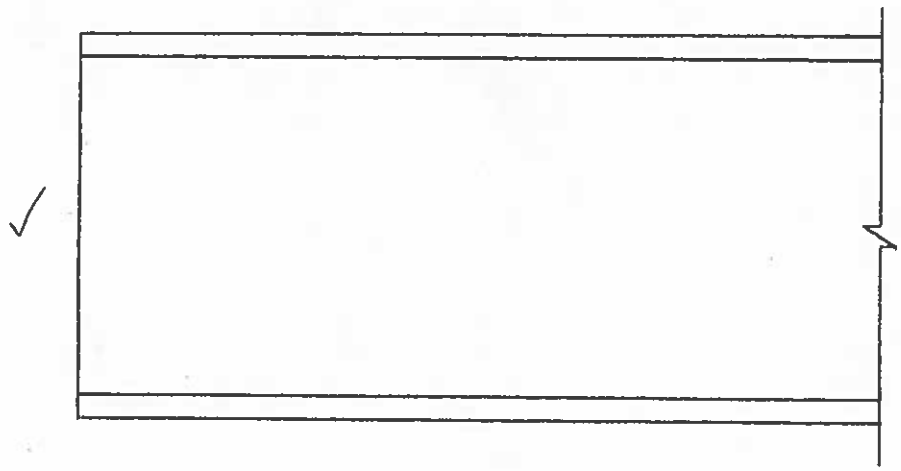

SPAN K, BEAM 1
WEST ELEV. AT P11

REVISION	DATE	CREW	COMPANY	REVISION	DATE	CREW	COMPANY
1				3			
2				4			

Dewberry
59 Elm Street, Suite 101
New Haven, CT 06510

FIELD NOTES	JOB NO.	BRIDGE NO: 03014 A
	DATE: 7/15/14	SHEET OF
	CREW: RFP, PHH	

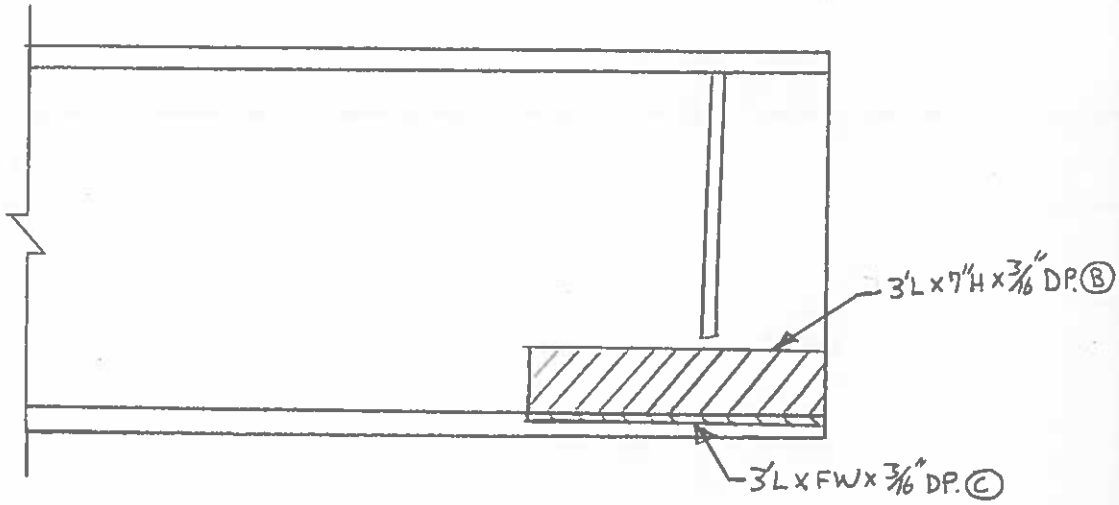

SPAN K, BEAM 2
EAST ELEV. AT P11

- WEB TIPPED 1/8" EAST OVER 2'

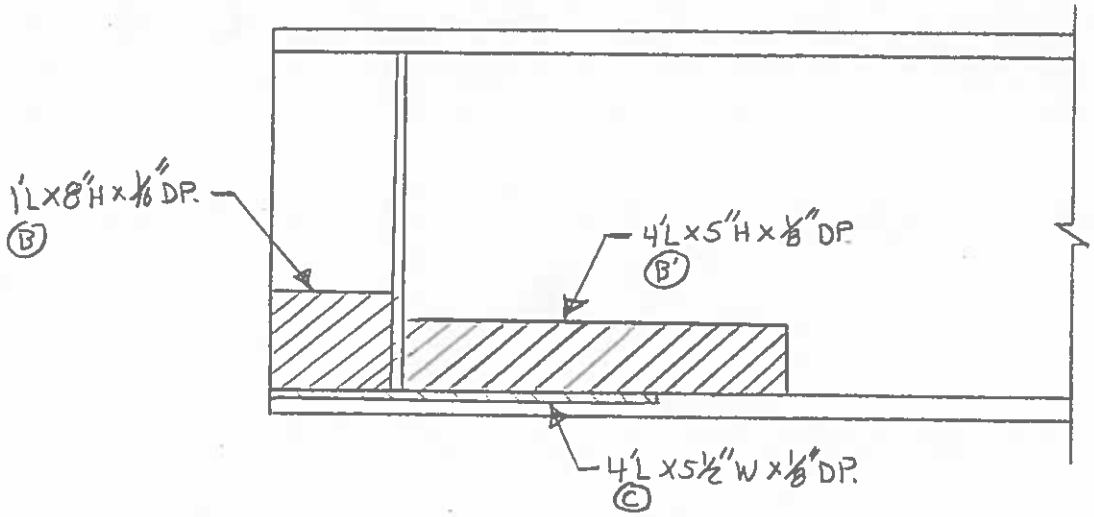

SPAN K, BEAM 2
WEST ELEV. AT P11

REVISION 1	DATE	CREW	COMPANY	REVISION 3	DATE	CREW	COMPANY
REVISION 2	DATE	CREW	COMPANY	REVISION 4	DATE	CREW	COMPANY

Dewberry®	FIELD NOTES	JOB NO.	BRIDGE NO: 03014A
59 Elm Street, Suite 101 New Haven, CT 06510		DATE: 7/15/14	SHEET OF
		CREW: RFP, PHH	

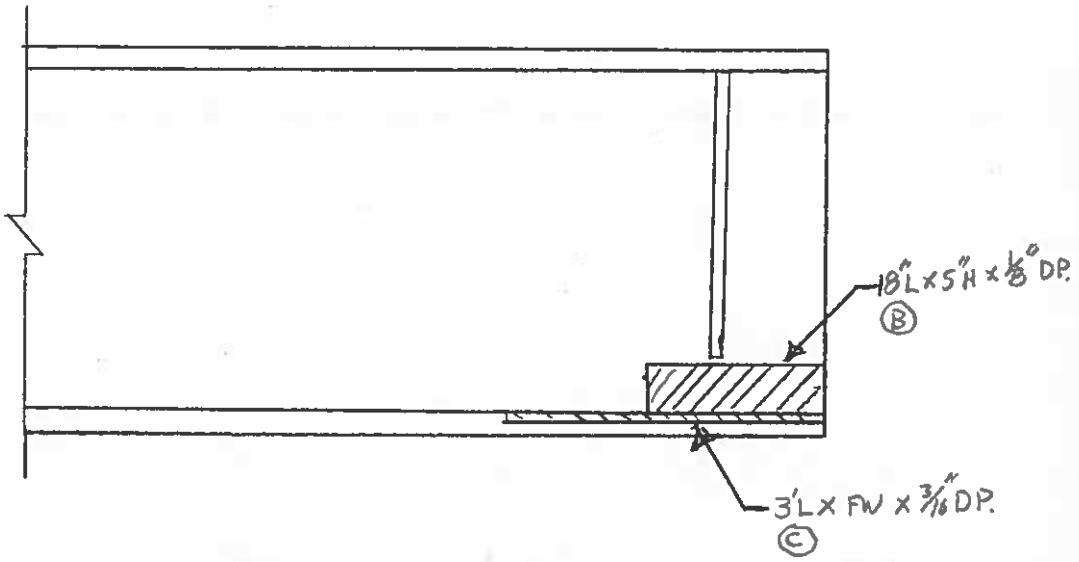

SPAN K, BEAM 3
EAST ELEV. AT P11

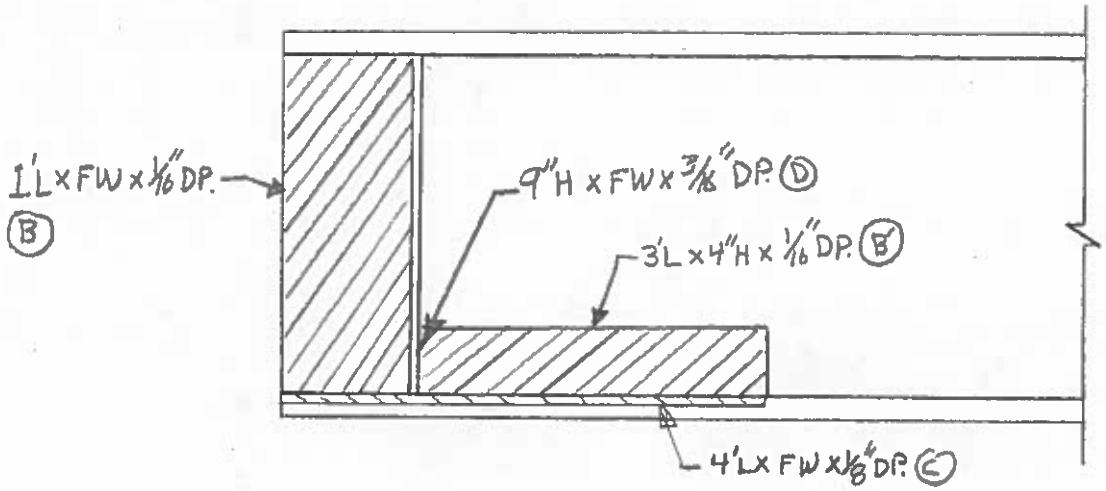

SPAN K, BEAM 3
WEST ELEV. AT P11

REVISION 1	DATE	CREW	COMPANY	REVISION 3	DATE	CREW	COMPANY
REVISION 2	DATE	CREW	COMPANY	REVISION 4	DATE	CREW	COMPANY

Dewberry
59 Elm Street, Suite 101
New Haven, CT 06510

FIELD NOTES

JOB NO.

BRIDGE NO: 03014 A

DATE: 7/15/14

SHEET OF

CREW: RFP, PHH

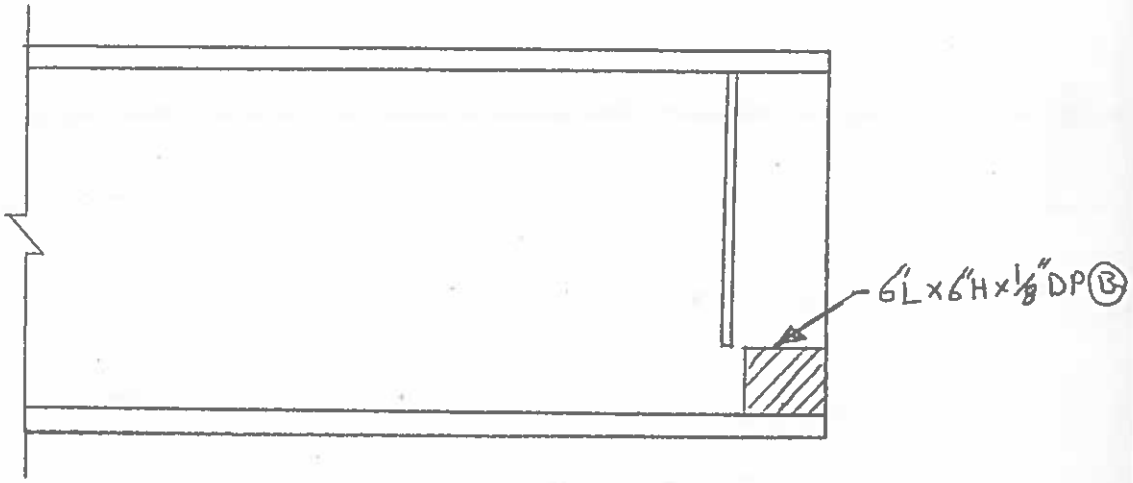

SPAN K, BEAM 4
EAST ELEV. AT P11

- TOP OF WEB BOWED EAST 1/8" OVER 2'

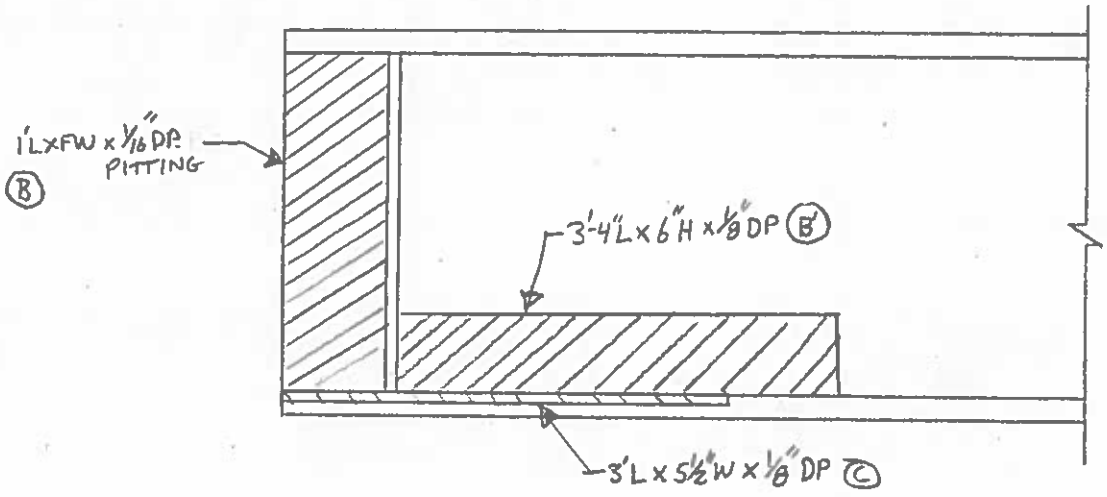

SPAN K, BEAM 4
WEST ELEV. AT P11

REVISION	DATE	CREW	COMPANY	REVISION	DATE	CREW	COMPANY
1				3			
2				4			

Dewberry
59 Elm Street, Suite 101
New Haven, CT 06510

FIELD NOTES

JOB NO.

BRIDGE NO: 03014 A

DATE: 7/15/14

SHEET OF

CREW: RFP, PMH

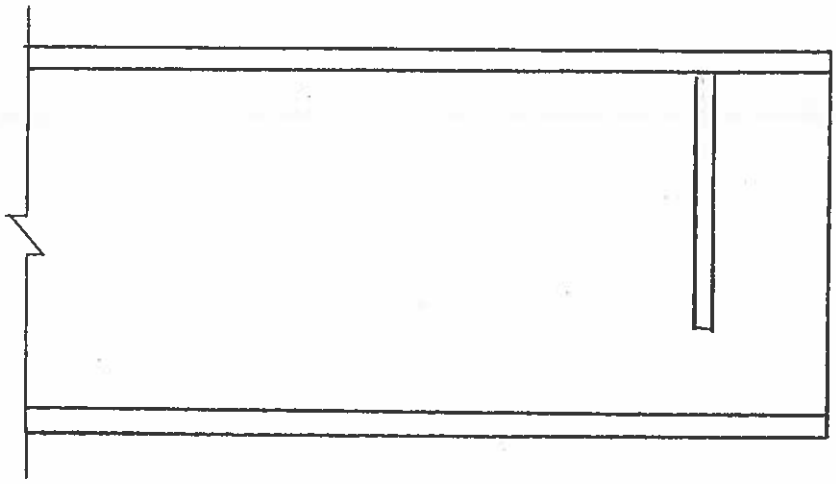

SPAN K, BEAM 5
EAST ELEV. AT P11

- TOP OF WEB TIPPED EAST 3/16" OVER 2'

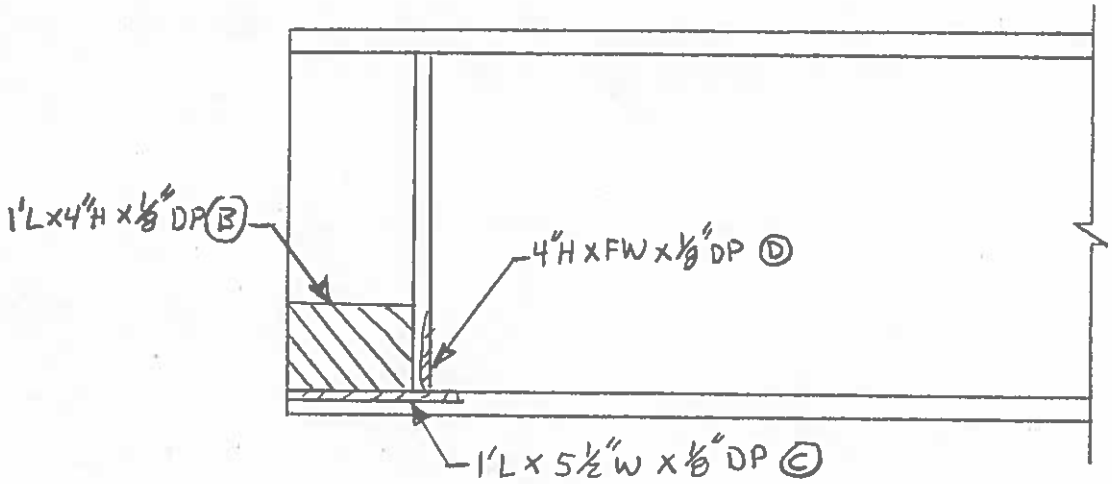

SPAN K, BEAM 5
WEST ELEV. AT P11

REVISION	DATE	CREW	COMPANY	REVISION	DATE	CREW	COMPANY
1				3			
2				4			

Dewberry
59 Elm Street, Suite 101
New Haven, CT 06510

FIELD NOTES	JOB NO.	BRIDGE NO: 03014A
	DATE: 7/15/14	SHEET OF
	CREW: RFP, PHH	

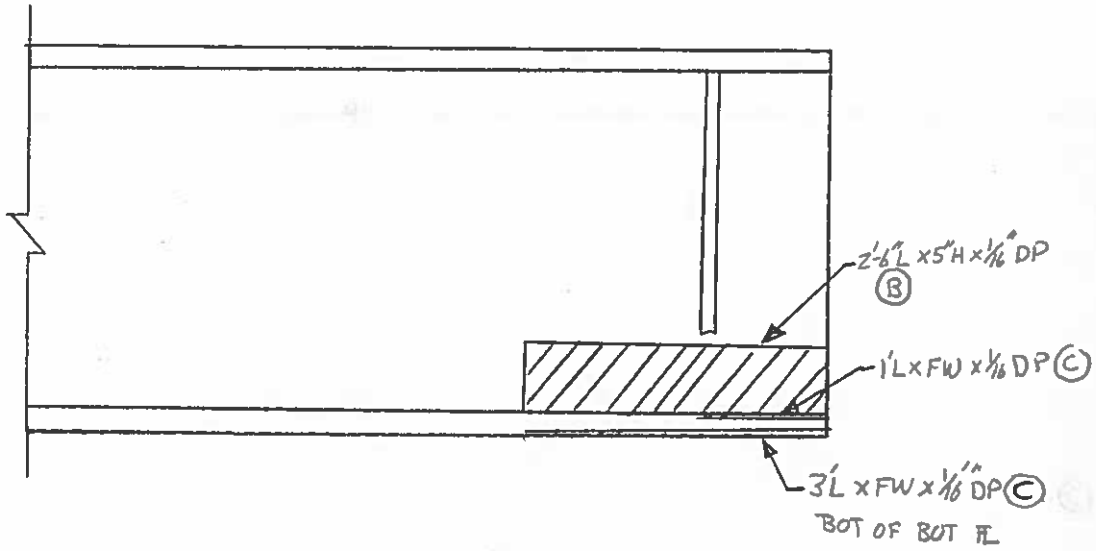

SPAN K, BEAM 6
EAST ELEV. AT P11

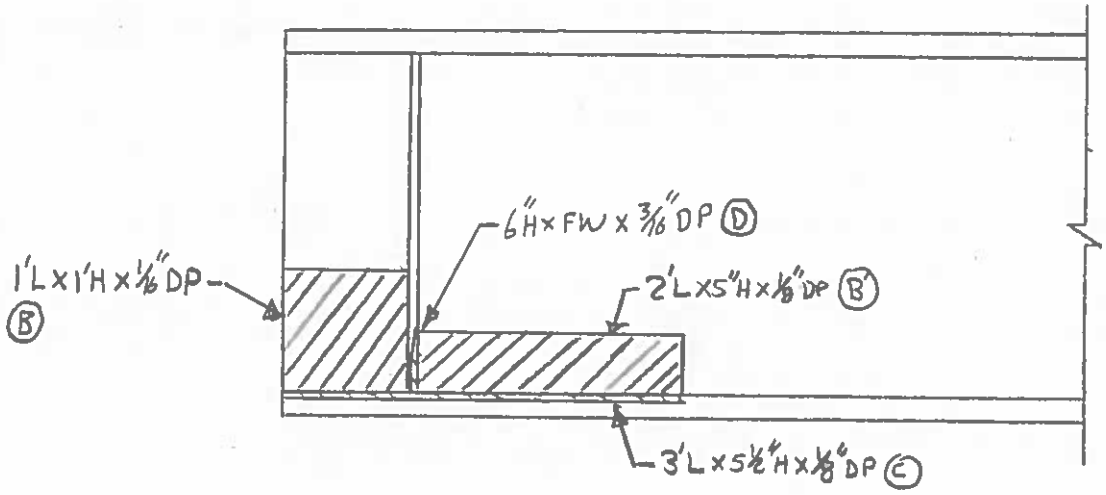

SPAN K, BEAM 6
WEST ELEV. AT P11

REVISION 1	DATE	CREW	COMPANY	REVISION 3	DATE	CREW	COMPANY
REVISION 2	DATE	CREW	COMPANY	REVISION 4	DATE	CREW	COMPANY

Dewberry
59 Elm Street, Suite 101
New Haven, CT 06510

FIELD NOTES	JOB NO.	BRIDGE NO: 03014 A
	DATE: 7/15/14	SHEET OF
	CREW: RFP, PHH	

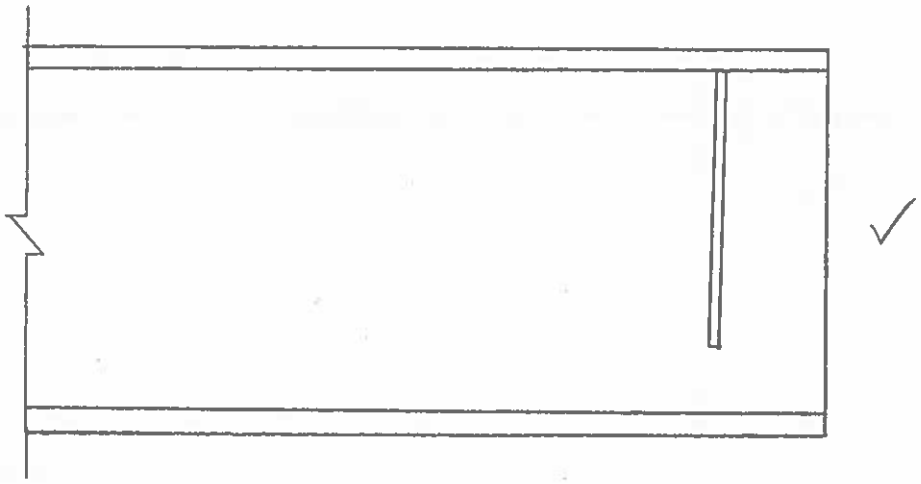

SPAN K, BEAM 7
EAST ELEV. AT P11

- TOP OF WEB BOWED ¼" OVER 1'

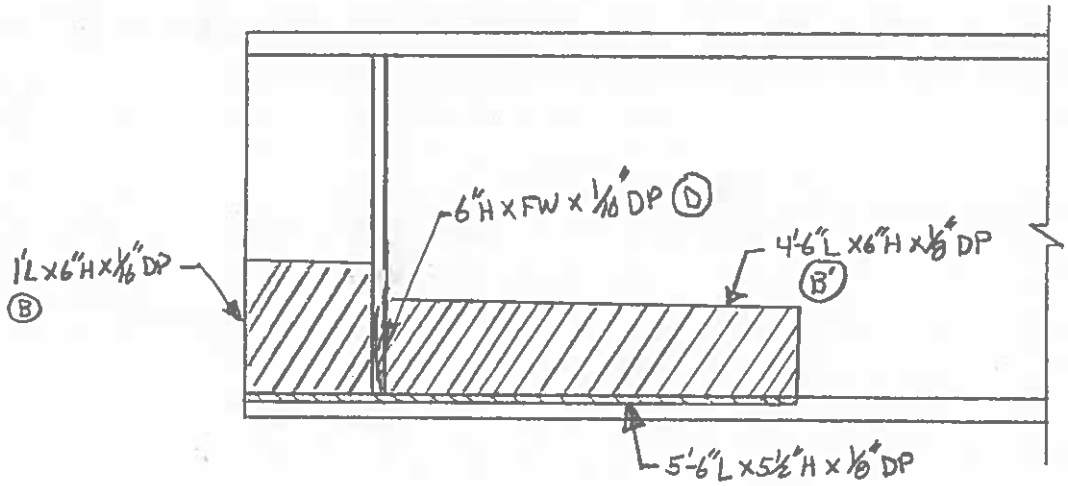

SPAN K, BEAM 7
WEST ELEV. AT P11

REVISION	DATE	CREW	COMPANY	REVISION	DATE	CREW	COMPANY
1				3			
2				4			

Dewberry® 59 Elm Street, Suite 101 New Haven, CT 06510	FIELD NOTES	JOB NO.	BRIDGE NO: 03014 A
		DATE: 7/15/14	SHEET OF
		CREW: RFP, PHH	

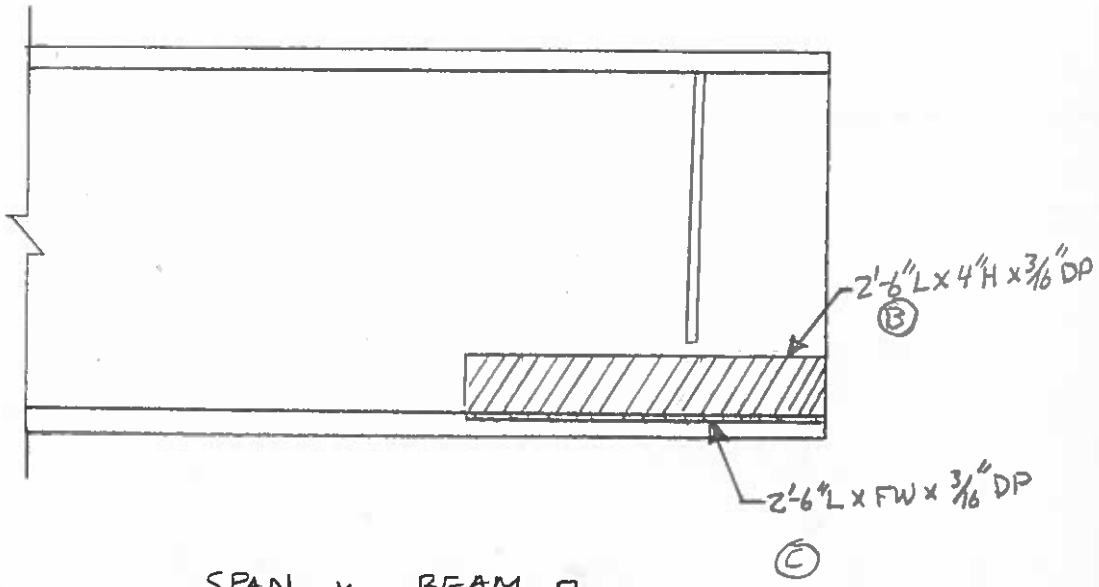

SPAN K, BEAM 8
EAST ELEV. AT P11

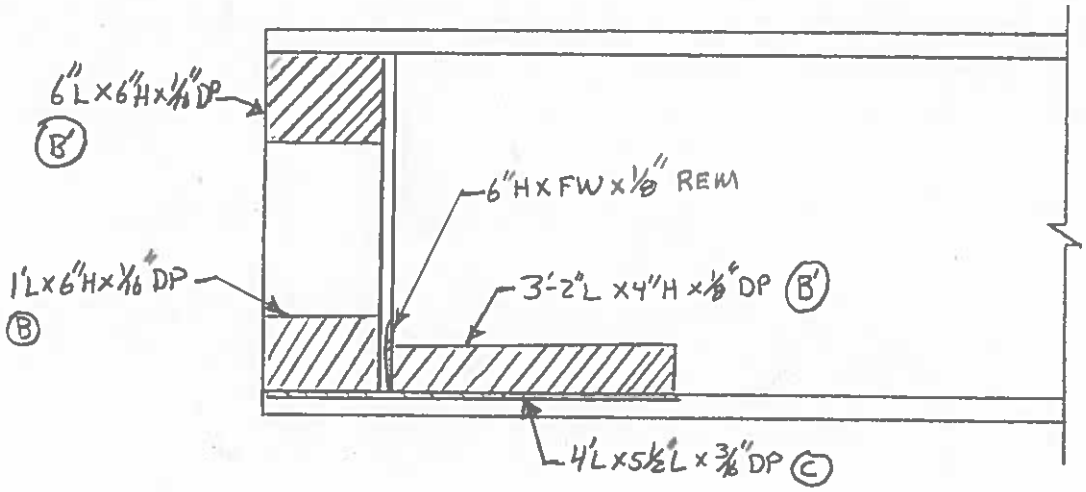

SPAN K, BEAM 8
WEST ELEV. AT P11

REVISION 1	DATE	CREW	COMPANY	REVISION 3	DATE	CREW	COMPANY
REVISION 2	DATE	CREW	COMPANY	REVISION 4	DATE	CREW	COMPANY

Dewberry
59 Elm Street, Suite 101
New Haven, CT 06510

FIELD NOTES

JOB NO.

BRIDGE NO: 03014A

DATE: 7/15/14

SHEET OF

CREW: RFP, PHH

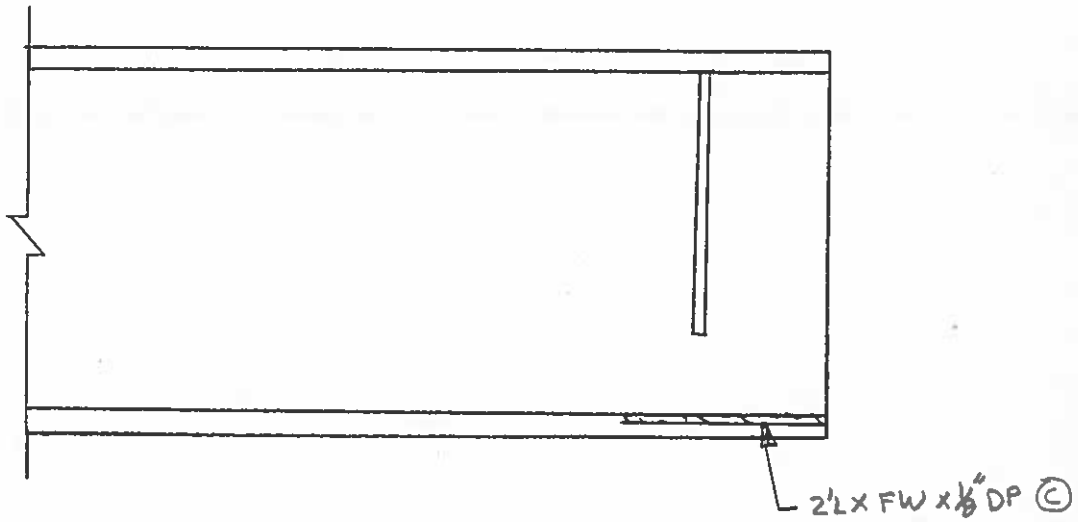

SPAN K, BEAM 9
EAST ELEV. AT P11

- TOP OF WEB BOWED 1/8" OVER 1' EAST

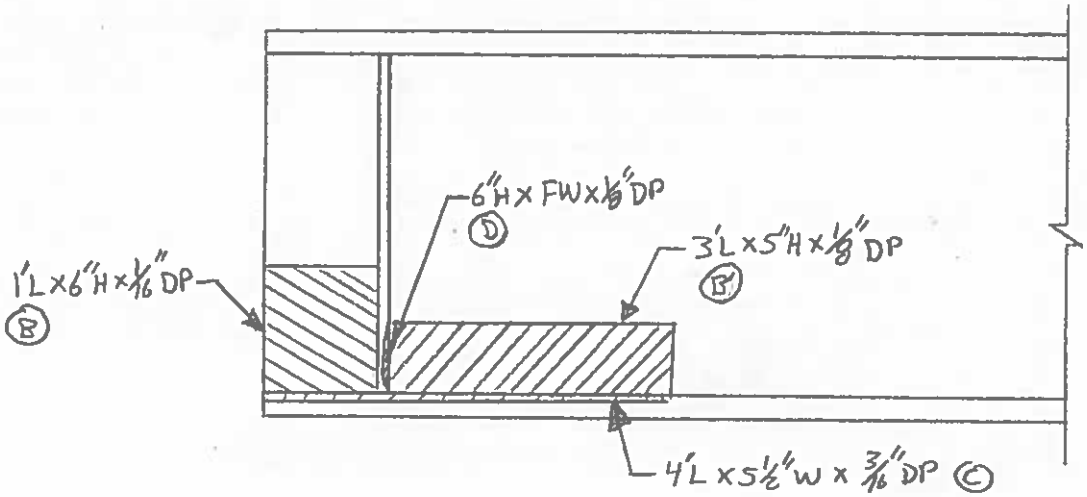

SPAN K, BEAM 9
WEST ELEV. AT P11

REVISION	DATE	CREW	COMPANY	REVISION	DATE	CREW	COMPANY
1				3			
2				4			

Dewberry
59 Elm Street, Suite 101
New Haven, CT 06510

FIELD NOTES

JOB NO.

BRIDGE NO: 03014 A

DATE: 7/15/14

SHEET OF

CREW: RFP, PHH

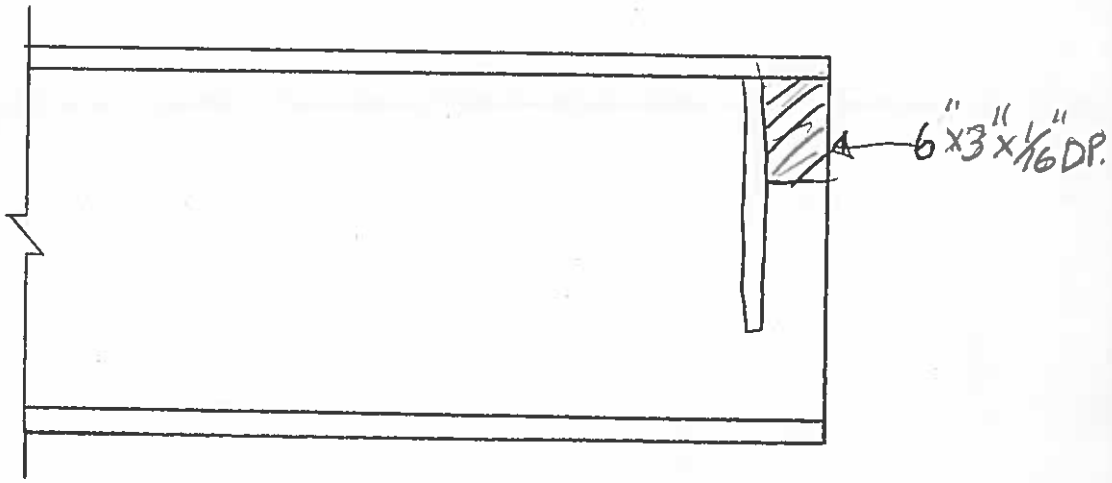

SPAN K, BEAM 10
EAST ELEV. AT P11

*TOP OF WEB TIPPED EAST 1/8" OVER 1'

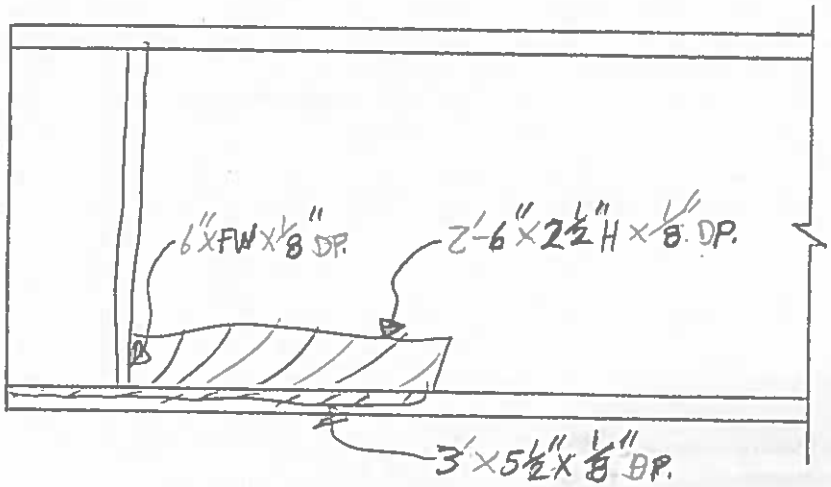

SPAN K, BEAM 10
WEST ELEV. AT P11

REVISION	DATE	CREW	COMPANY	REVISION	DATE	CREW	COMPANY
1				3			
2				4			

Dewberry

59 Elm Street, Suite 101
New Haven, CT 06510

FIELD NOTES

JOB NO.

DATE: 7/15/14

BRIDGE NO: 03014 A

SHEET OF

CREW: RFP, PHH

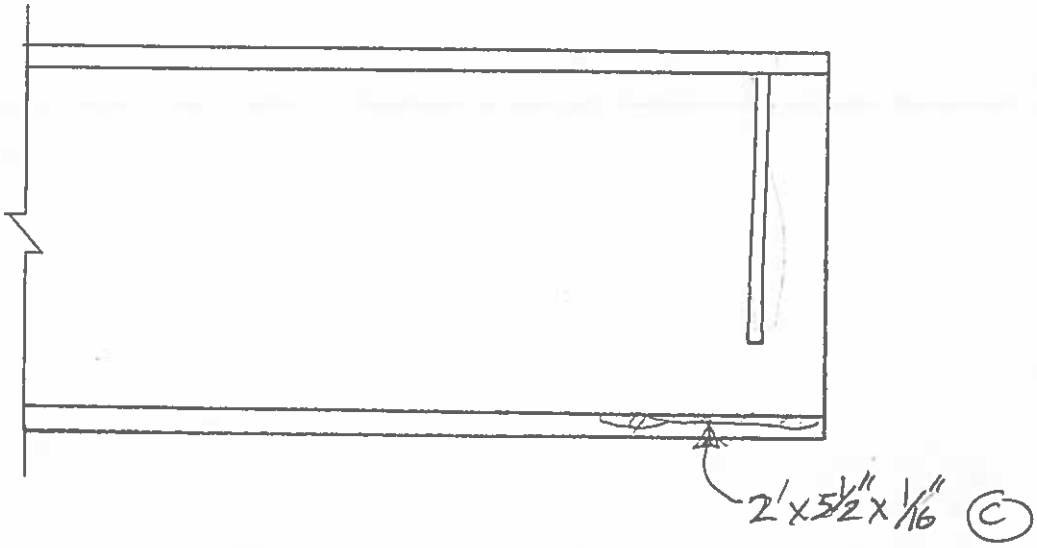

SPAN K, BEAM 11
EAST ELEV. AT P11

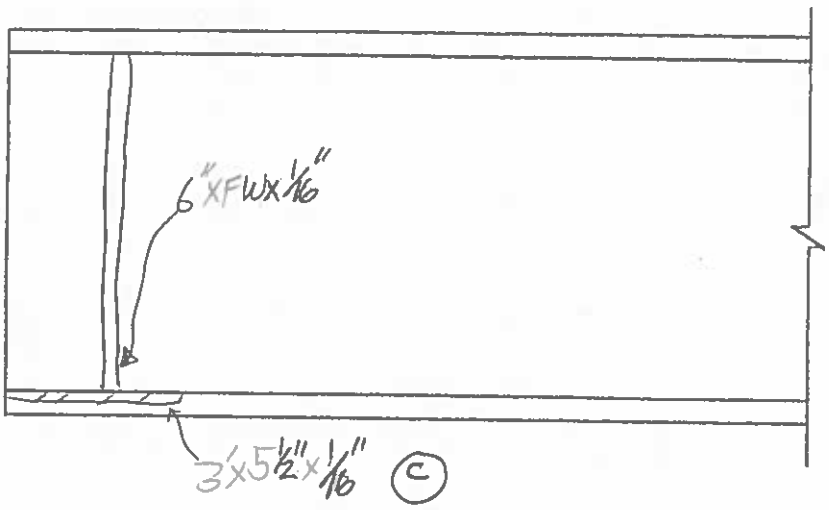

SPAN K, BEAM 11
WEST ELEV. AT P11

REVISION	DATE	CREW	COMPANY	REVISION	DATE	CREW	COMPANY
1				3			
2				4			

Dewberry
59 Elm Street, Suite 101
New Haven, CT 06510

FIELD NOTES

JOB NO.

DATE: 7/15/14

BRIDGE NO: 03014A

SHEET OF

CREW: RFP, PHH

- WEB BOWED 3/16" WEST

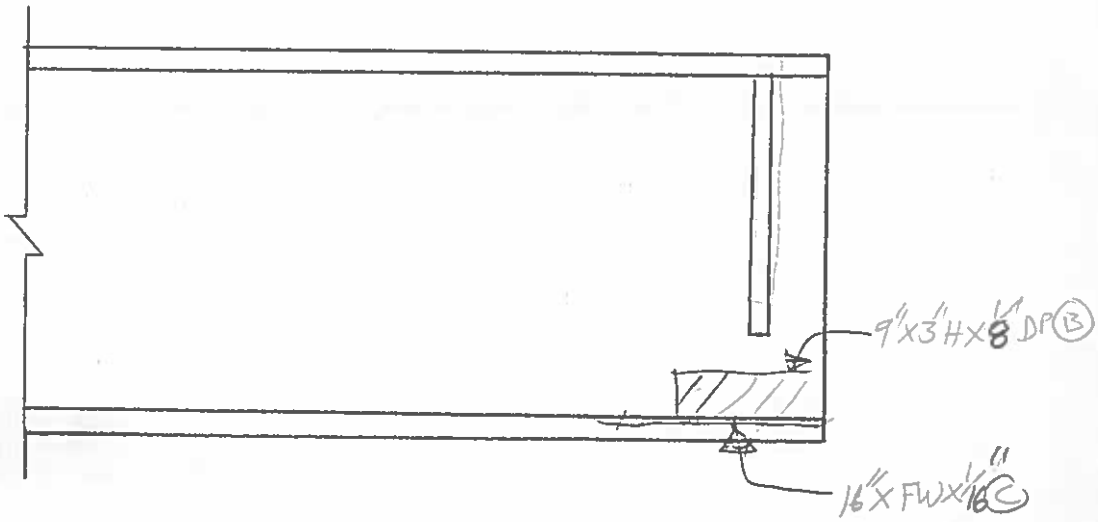

SPAN K, BEAM 12
EAST ELEV. AT P11

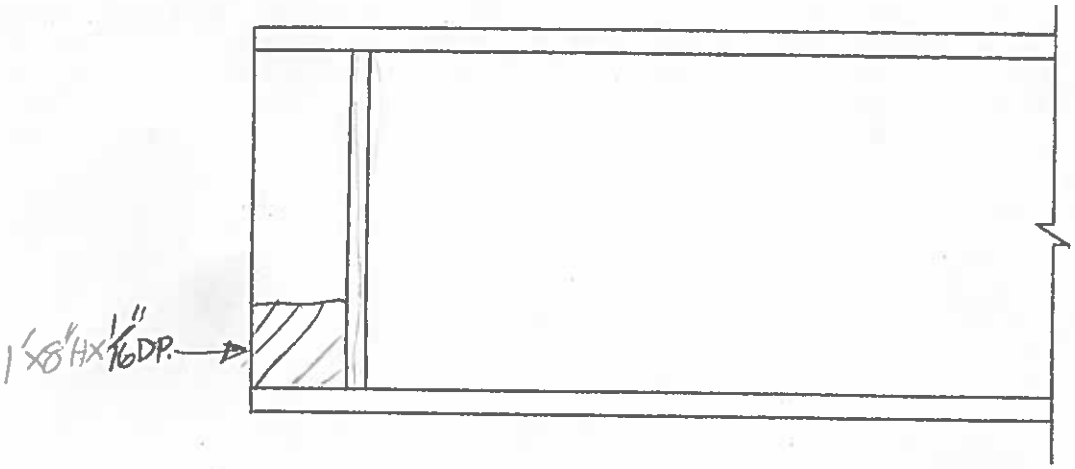

SPAN K, BEAM 12
WEST ELEV. AT P11

REVISION	DATE	CREW	COMPANY	REVISION	DATE	CREW	COMPANY
1				3			
2				4			

Dewberry
59 Elm Street, Suite 101
New Haven, CT 06510

FIELD NOTES

JOB NO.

BRIDGE NO: 03014 A

DATE: 7/15/14

SHEET OF

CREW: RFP, PHH

- WEB BOWED 1/4" WEST

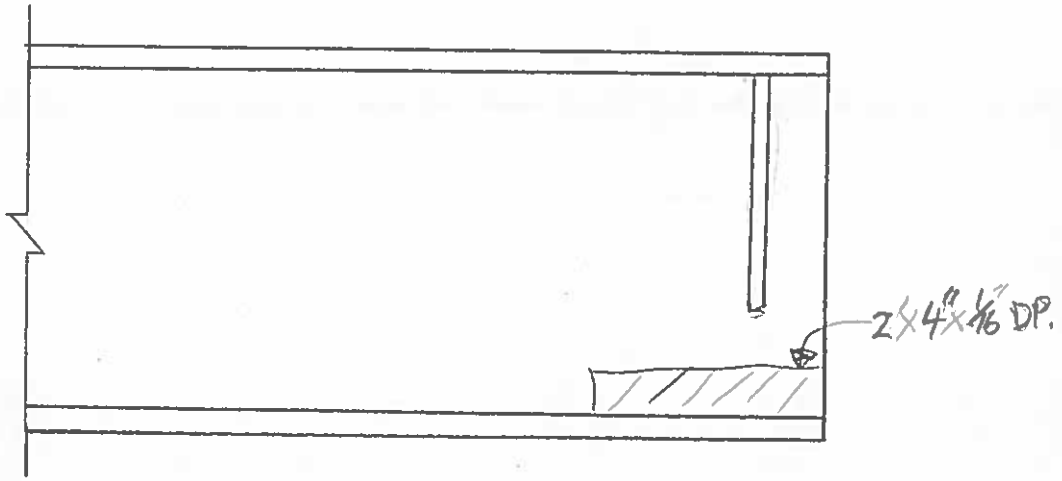

SPAN K, BEAM 13
WEST ELEV. AT P11

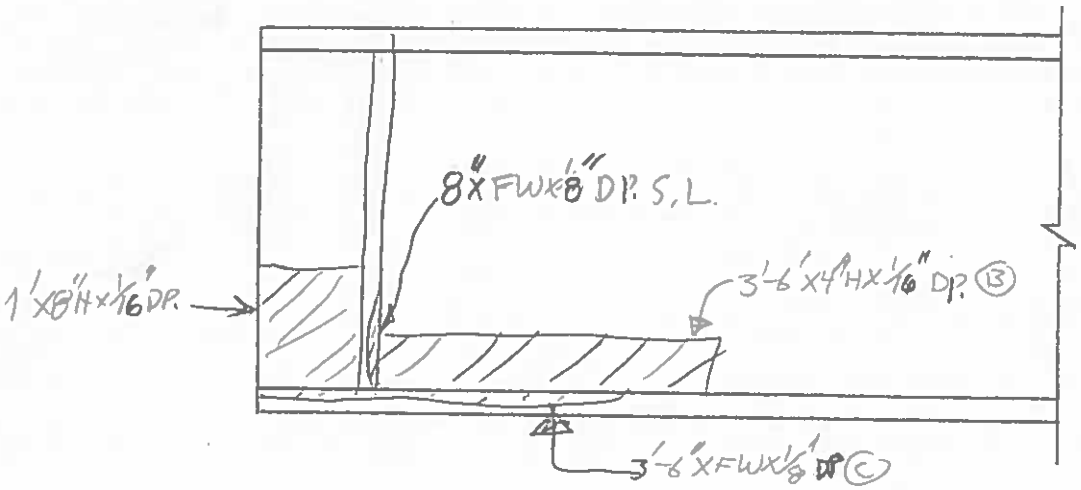

SPAN K, BEAM 13
EAST ELEV. AT P11

REVISION	DATE	CREW	COMPANY	REVISION	DATE	CREW	COMPANY
1				3			
2				4			

Dewberry
59 Elm Street, Suite 101
New Haven, CT 06510

FIELD NOTES

JOB NO.

BRIDGE NO: 03014 A

DATE: 7/15/14

SHEET OF

CREW: RFP, PHH

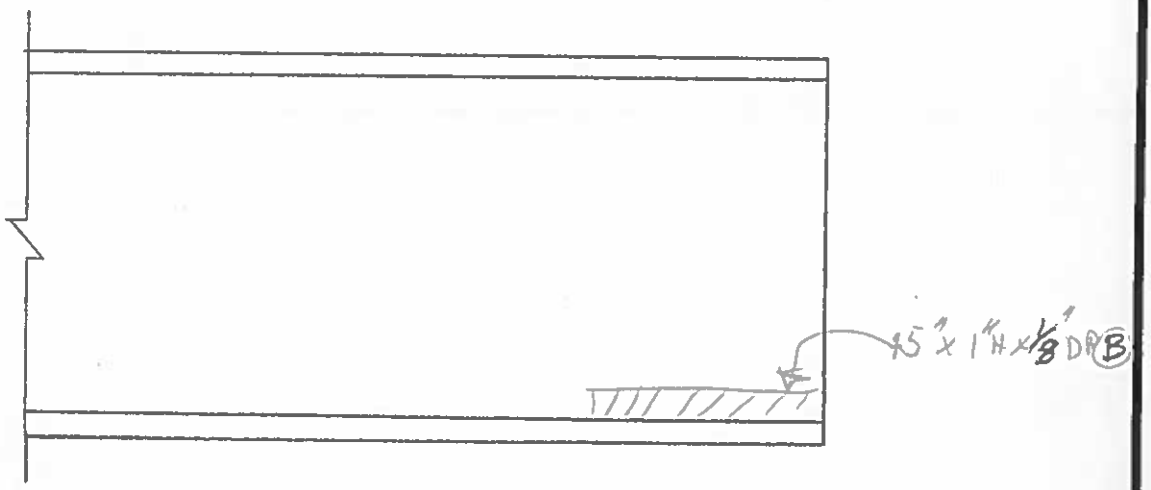

SPAN K, BEAM 14
EAST ELEV. AT P11

WEB
- BOWED EAST 3/16"

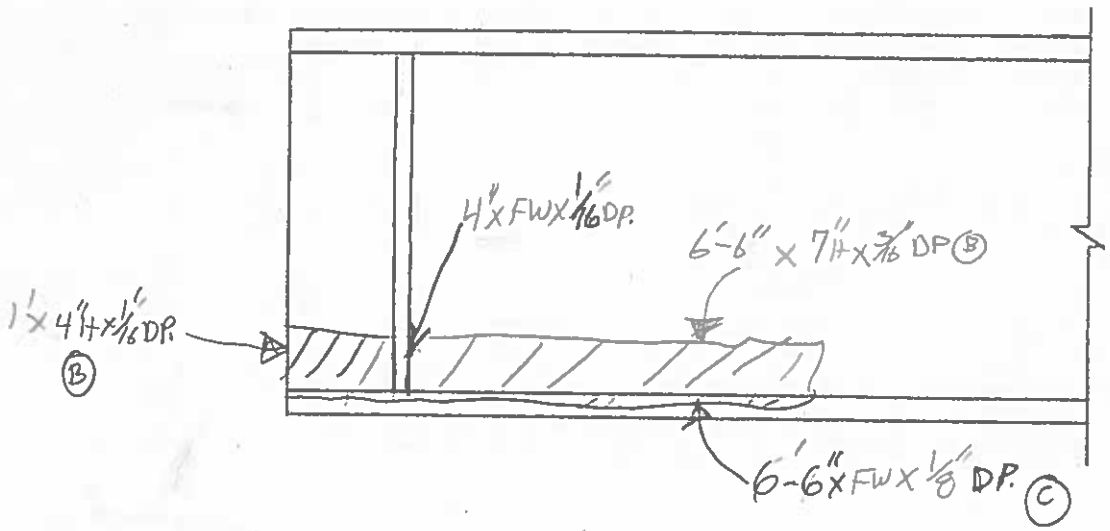

SPAN K, BEAM 14
WEST ELEV. AT P11

REVISION	DATE	CREW	COMPANY	REVISION	DATE	CREW	COMPANY
1				3			
2				4			

Dewberry
59 Elm Street, Suite 101
New Haven, CT 06510

FIELD NOTES

JOB NO.

BRIDGE NO: 03014A

DATE: 7/15/14

SHEET OF

CREW: RFP, PHH

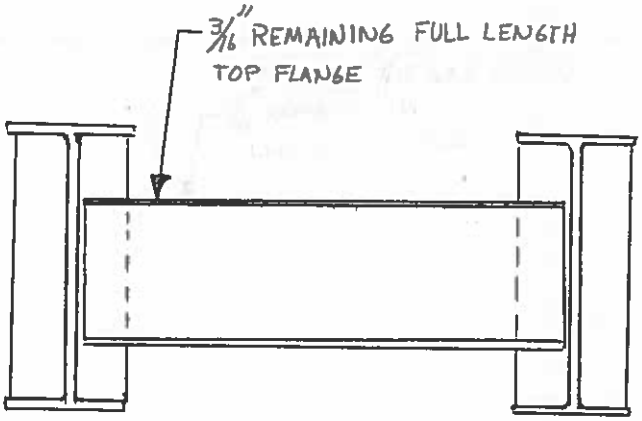

- 1" GAP BTWN. TOP FLANGE & DECK @ WEST END

BAY 1 END DIAPHAGM

SPAN K @ P11

REVISION	DATE	CREW	COMPANY	REVISION	DATE	CREW	COMPANY
1				3			
2				4			

Dewberry
59 Elm Street, Suite 101
New Haven, CT 06510

FIELD NOTES

JOB NO.

BRIDGE NO: 03014A

DATE: 7/2/2014

SHEET OF

CREW: RFP, PHH

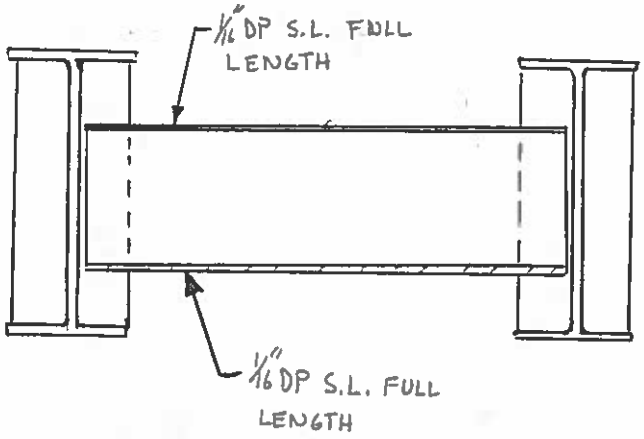

BAY 7 END DIAPHRAGM

SPAN I @ P9

REVISION	DATE	CREW	COMPANY	REVISION	DATE	CREW	COMPANY
1				3			
2				4			

SPAN L

FIELD NOTES

PREPARED BY: Garg Consulting Services, Inc.	PROJ. NO. 170-3013	BRIDGE NO. 3014A
	DATE: 09/18/2010	SHEET 52 of 57
	CREW: PDG, MD	

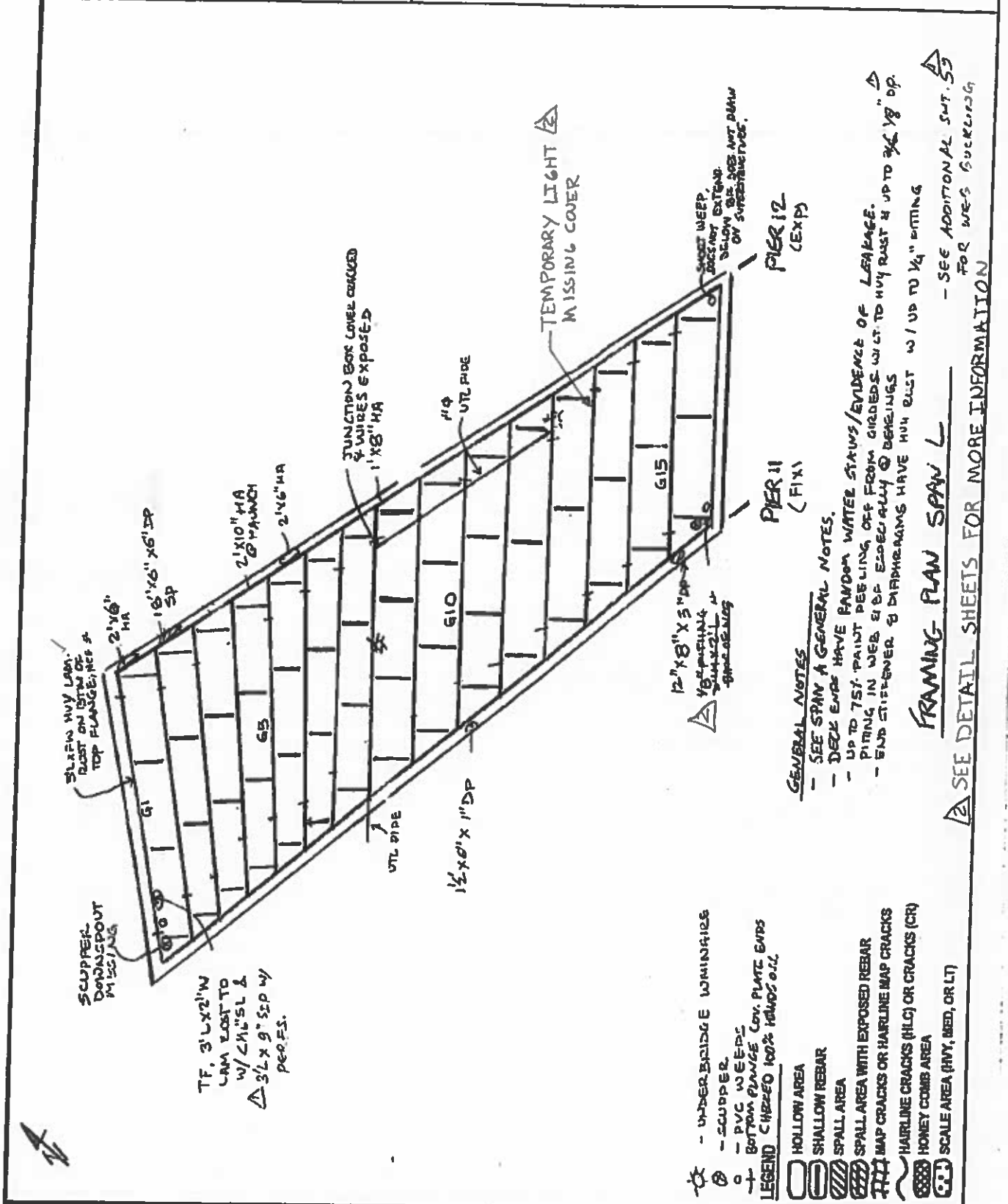

Revision	Date	Crew	Company	Revision	Date	Crew	Company
1	9/3/12	PKG, AKC	GHL				
2	7/14/14 & 7/15/14	RFP, PHH	DEW				

Dewberry
59 Elm Street, Suite 101
New Haven, CT 06510

FIELD NOTES	JOB NO.	BRIDGE NO: 03014 A
	DATE: 7/14/14	SHEET OF
	CREW: RFP, PHH	

*TOP OF WEB TIPPED 1/8" WEST OVER 2'

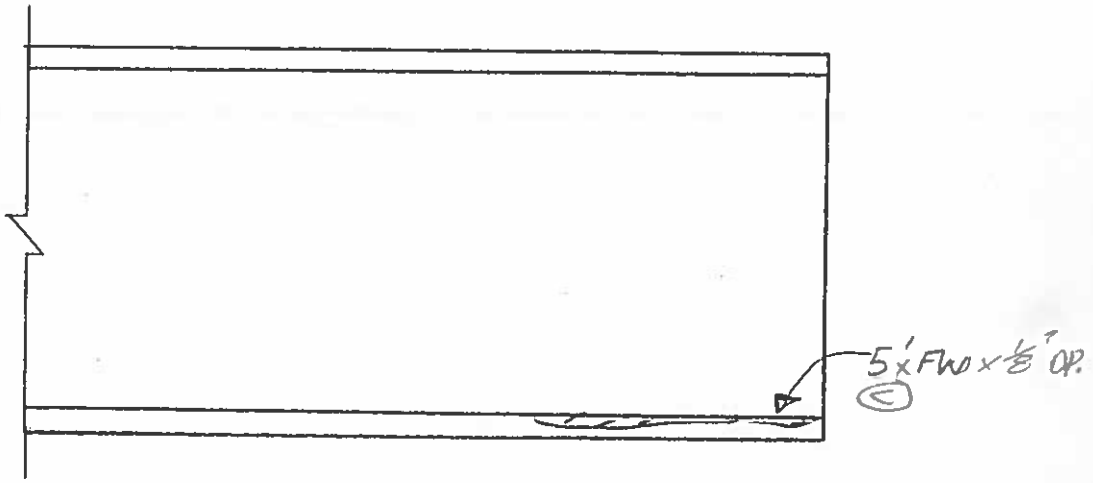

SPAN L, BEAM 1
WEST ELEV. AT P11

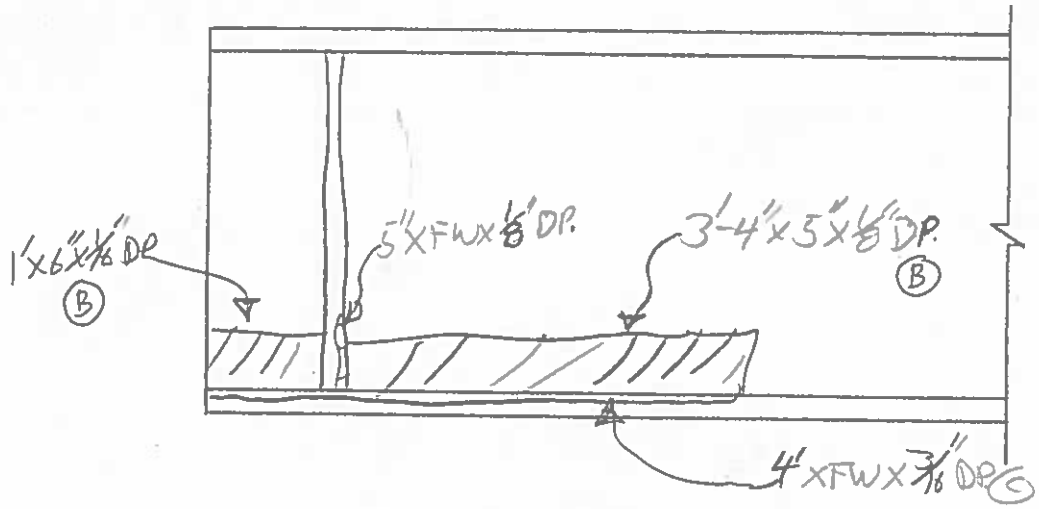

SPAN L, BEAM 1
EAST ELEV. AT P11

REVISION 1	DATE	CREW	COMPANY	REVISION 3	DATE	CREW	COMPANY
REVISION 2	DATE	CREW	COMPANY	REVISION 4	DATE	CREW	COMPANY

Dewberry
59 Elm Street, Suite 101
New Haven, CT 06510

FIELD NOTES	JOB NO.	BRIDGE NO: 03014 A
	DATE: 7/14/14	SHEET OF
	CREW: RFP, PHH	

* WEB BOWED EAST ¼"

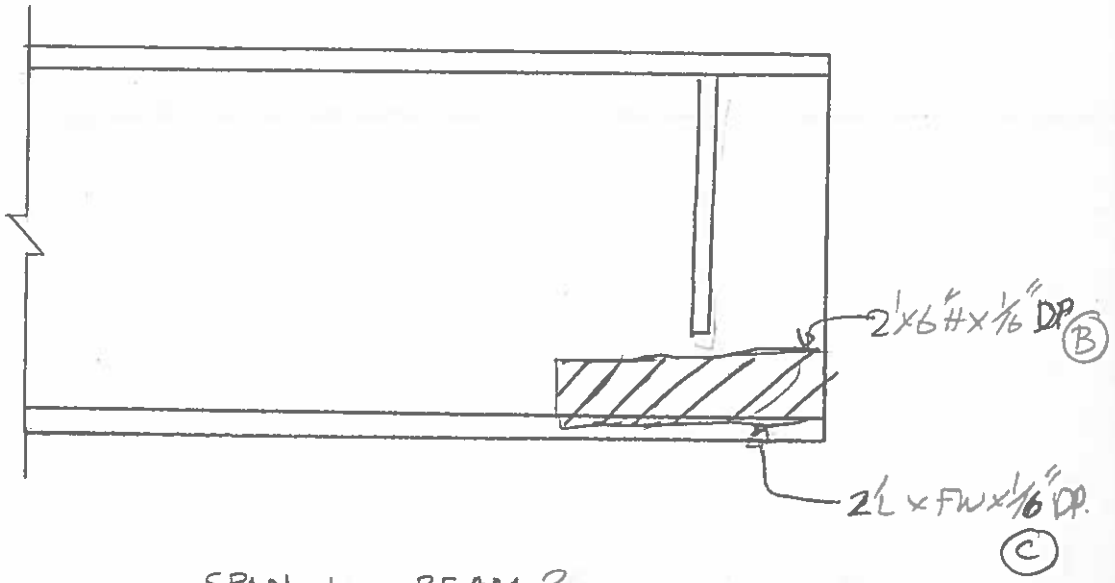

SPAN L, BEAM 2
WEST ELEV. AT P11

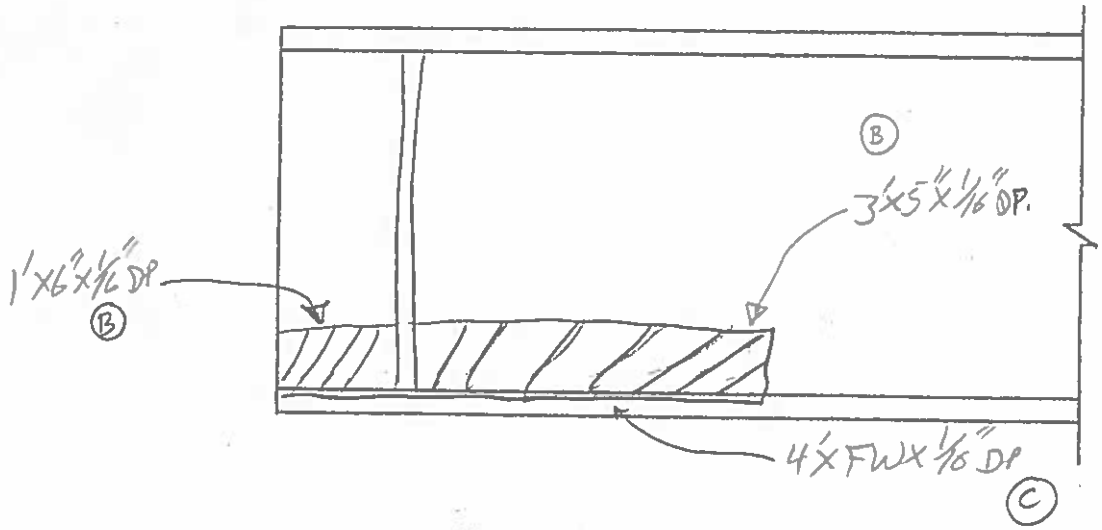

SPAN L, BEAM 2
EAST ELEV. AT P11

REVISION 1	DATE	CREW	COMPANY	REVISION 3	DATE	CREW	COMPANY
REVISION 2	DATE	CREW	COMPANY	REVISION 4	DATE	CREW	COMPANY

Dewberry	FIELD NOTES	JOB NO.	BRIDGE NO: 03014A
59 Elm Street, Suite 101 New Haven, CT 06510		DATE: 7/14/14	SHEET OF
		CREW: RFP, PHH	

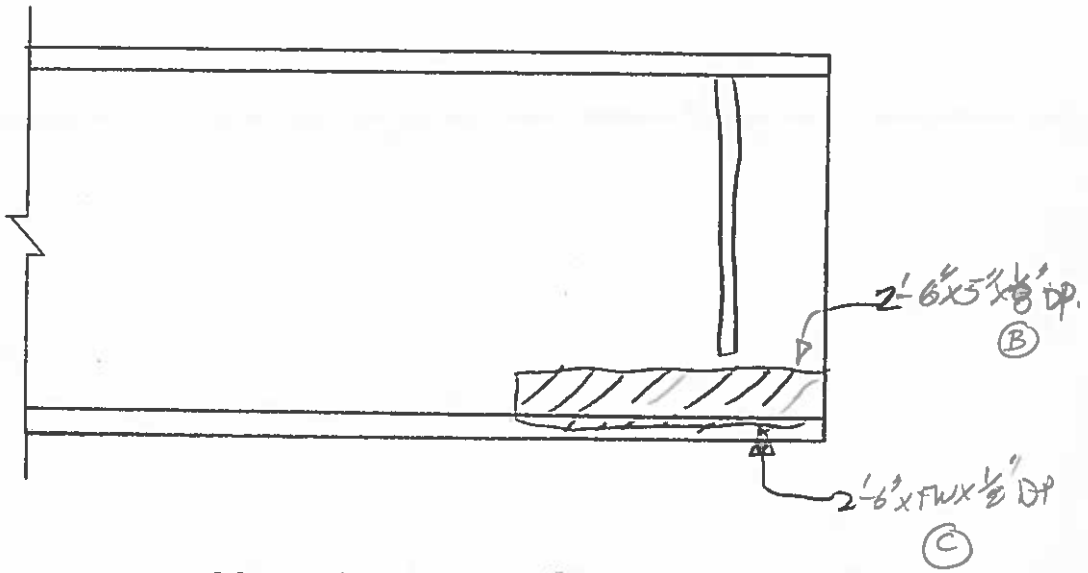

SPAN 1, BEAM 3
WEST ELEV. AT P11

- WEB BOWED EAST 3/16"

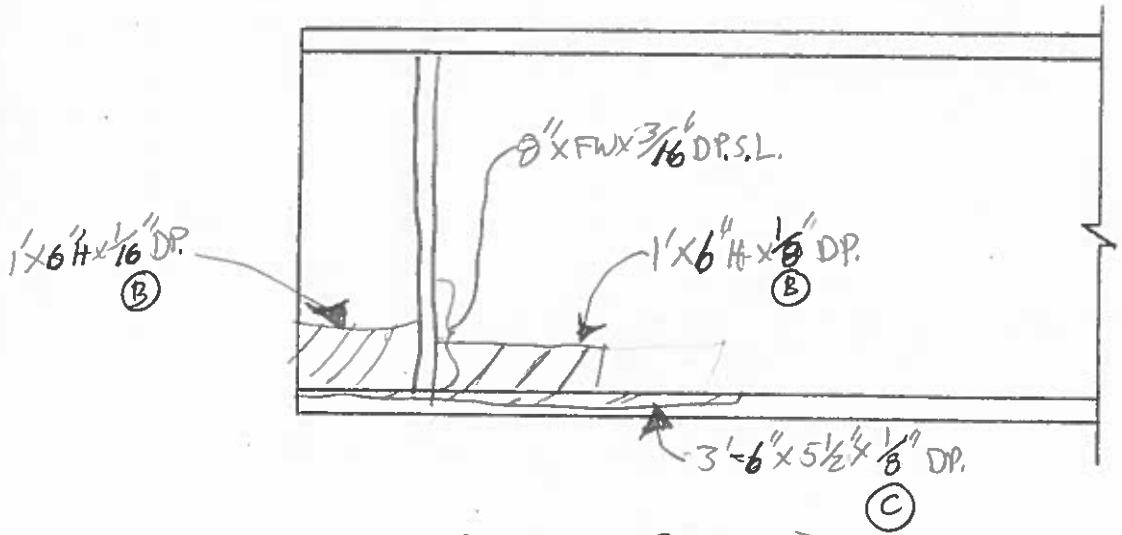

SPAN 1, BEAM 3
EAST ELEV. AT P11

REVISION 1	DATE	CREW	COMPANY	REVISION 3	DATE	CREW	COMPANY
REVISION 2	DATE	CREW	COMPANY	REVISION 4	DATE	CREW	COMPANY

Dewberry
59 Elm Street, Suite 101
New Haven, CT 06510

FIELD NOTES	JOB NO.	BRIDGE NO: 03014 A
	DATE: 7/14/14	SHEET OF
	CREW: RFP, PHH	

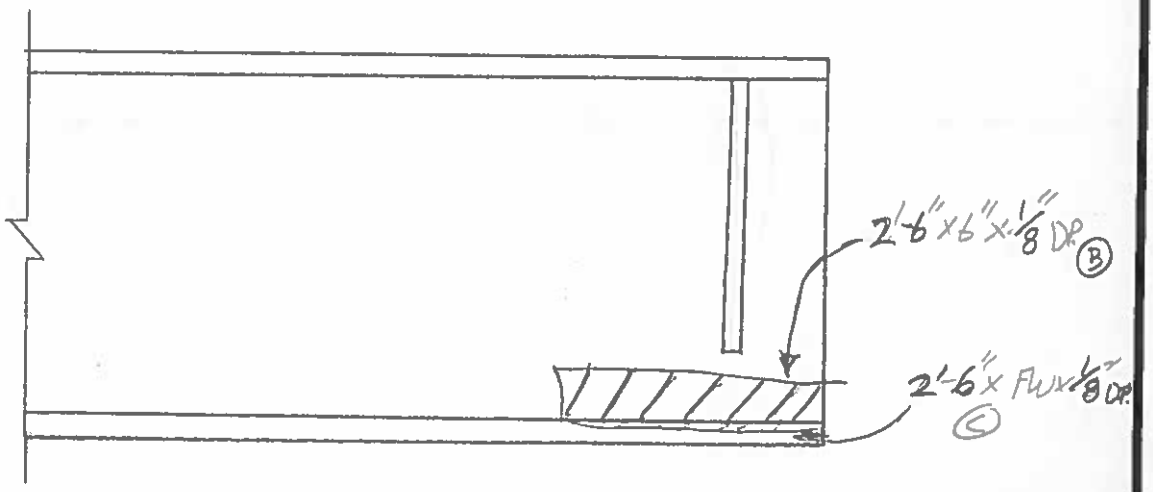

SPAN L, BEAM 4
WEST ELEV. AT P11

- TOP OF WEB TIPPED 3/8" EAST
- OVERALL 1/16" BOW TOWARD WEST

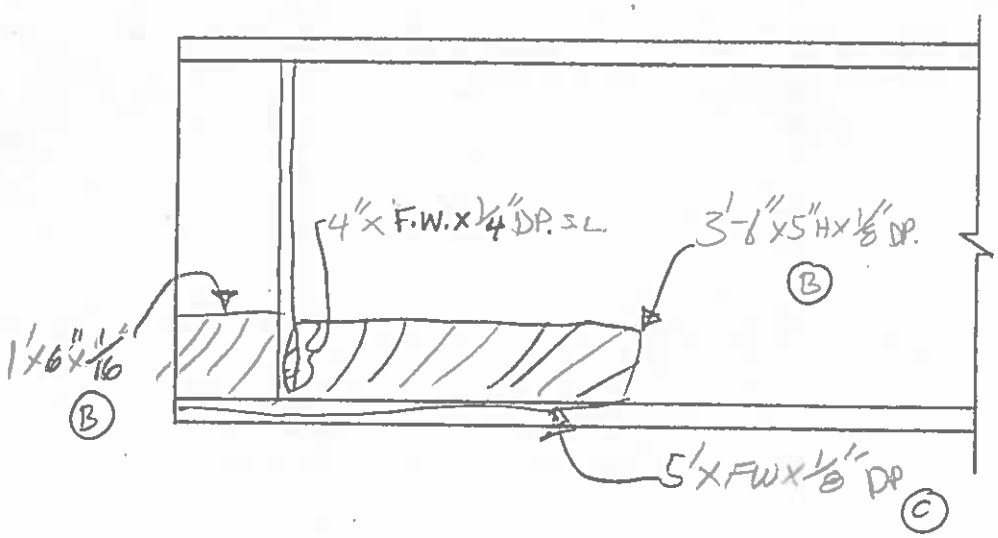

SPAN L, BEAM 4
EAST ELEV. AT P11

REVISION 1	DATE	CREW	COMPANY	REVISION 3	DATE	CREW	COMPANY
REVISION 2	DATE	CREW	COMPANY	REVISION 4	DATE	CREW	COMPANY

Dewberry
59 Elm Street, Suite 101
New Haven, CT 06510

FIELD NOTES	JOB NO.	BRIDGE NO: 03014 A
	DATE: 7/14/14	SHEET OF
	CREW: RFP, PHH	

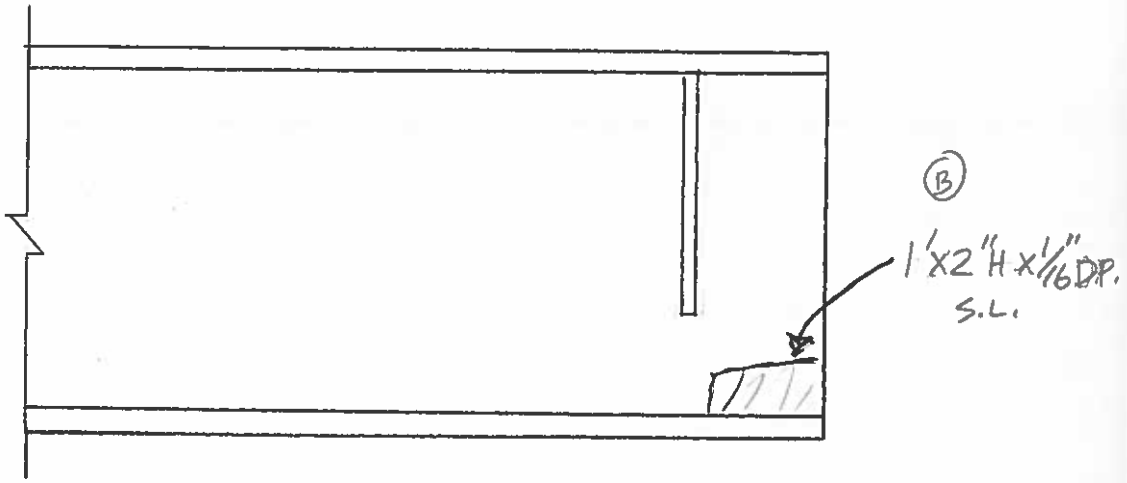

SPAN L, BEAM 5
WEST ELEV. AT P11

- TOP OF WEB TIPPED EAST 1/8"

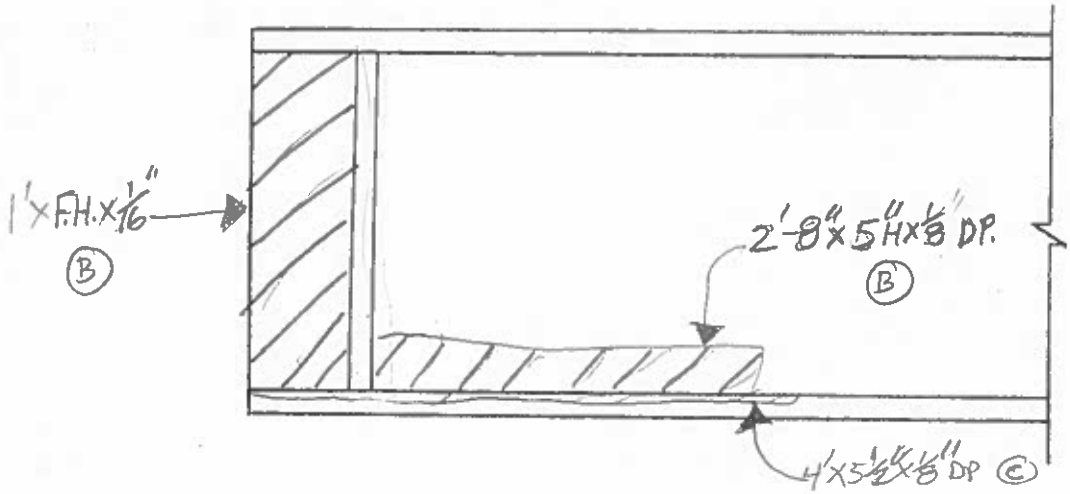

SPAN L, BEAM 5
EAST ELEV. AT P11

REVISION 1	DATE	CREW	COMPANY	REVISION 3	DATE	CREW	COMPANY
REVISION 2	DATE	CREW	COMPANY	REVISION 4	DATE	CREW	COMPANY

Dewberry® 59 Elm Street, Suite 101 New Haven, CT 06510	FIELD NOTES	JOB NO.	BRIDGE NO: 03014 A
		DATE: 7/14/14	SHEET OF
		CREW: RFP, PHH	

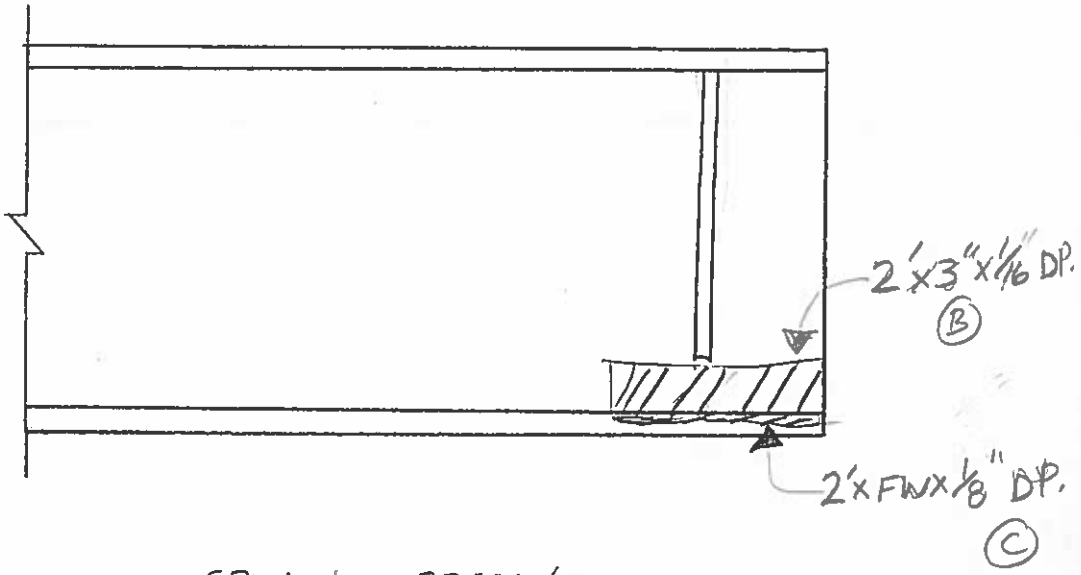

SPAN L, BEAM 6
WEST ELEV. AT P11

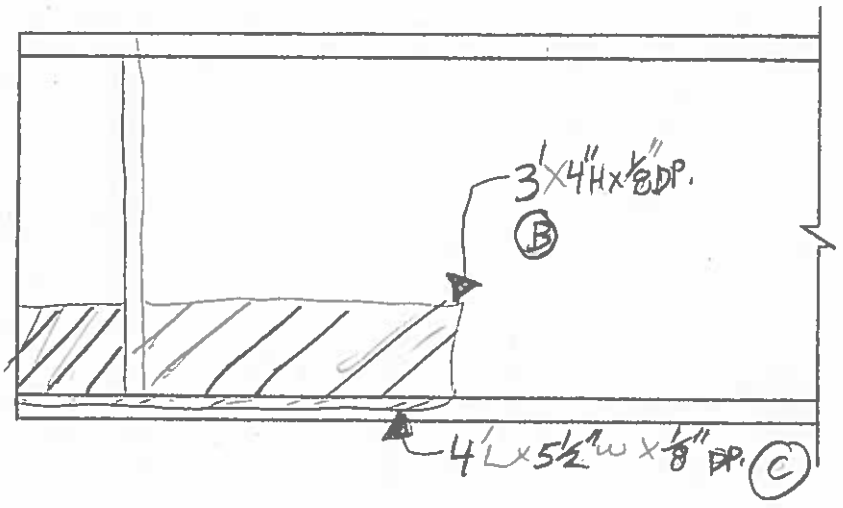

SPAN L, BEAM 6
EAST ELEV. AT P11

REVISION	DATE	CREW	COMPANY	REVISION	DATE	CREW	COMPANY
1				3			
2				4			

Dewberry
59 Elm Street, Suite 101
New Haven, CT 06510

FIELD NOTES

JOB NO.

BRIDGE NO: 03014 A

DATE: 7/14/14

SHEET OF

CREW: RFP, PHH

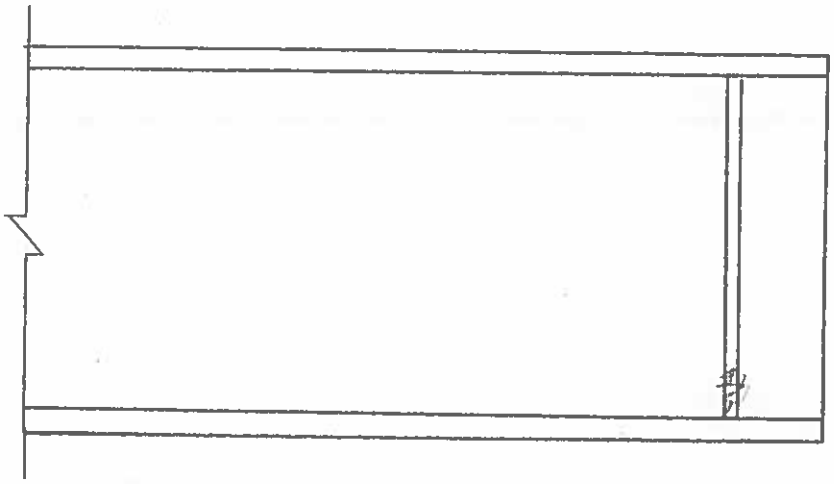

SPAN L, BEAM 7
WEST ELEV. AT P11

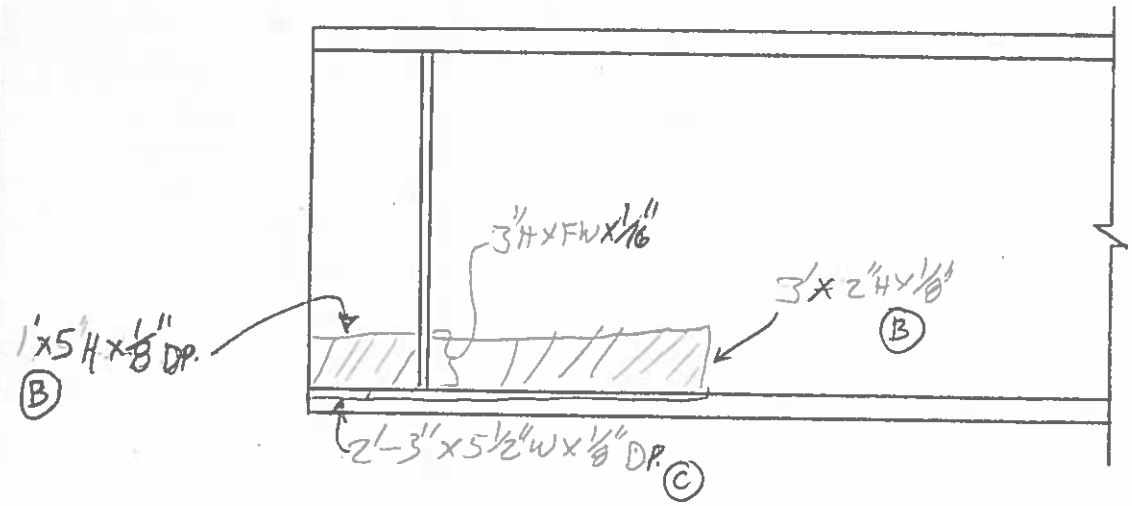

SPAN L, BEAM 7
EAST ELEV. AT P11

REVISION	DATE	CREW	COMPANY	REVISION	DATE	CREW	COMPANY
1				3			
2				4			

Dewberry
59 Elm Street, Suite 101
New Haven, CT 06510

FIELD NOTES	JOB NO.	BRIDGE NO: 03014 A
	DATE: 7/14/14	SHEET OF
	CREW: RFP, PHH	

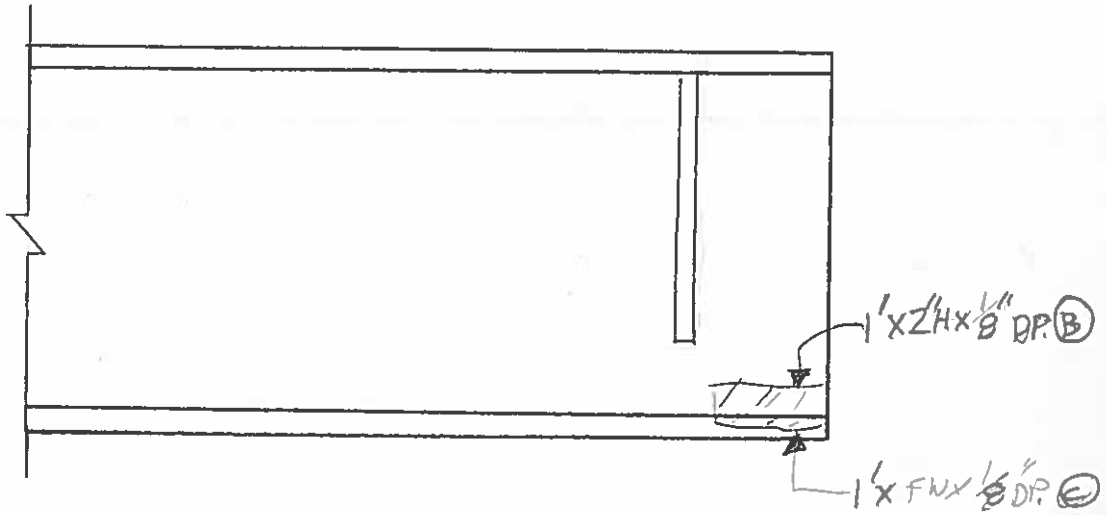

SPAN L, BEAM 8
WEST ELEV. AT P11

• WEB BOWED ⅛" EAST

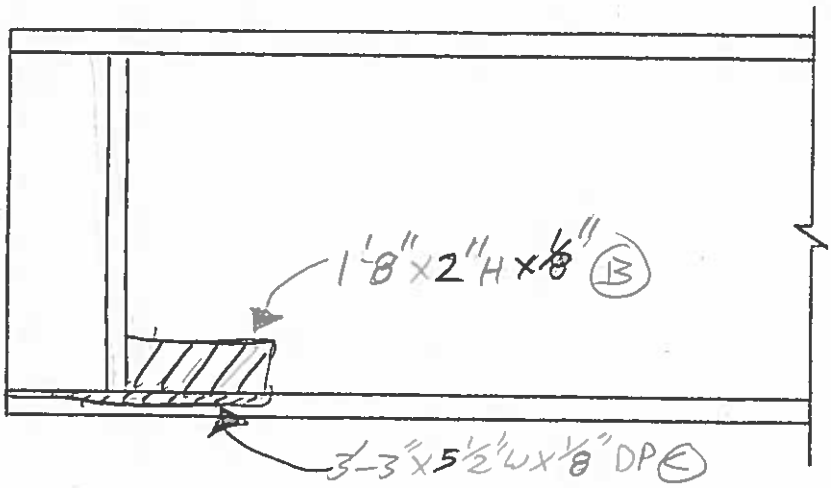

SPAN L, BEAM 8
EAST ELEV. AT P11

REVISION 1	DATE	CREW	COMPANY	REVISION 3	DATE	CREW	COMPANY
REVISION 2	DATE	CREW	COMPANY	REVISION 4	DATE	CREW	COMPANY

Dewberry
59 Elm Street, Suite 101
New Haven, CT 06510

FIELD NOTES	JOB NO.	BRIDGE NO: 03014 A
	DATE: 7/15/14	SHEET OF
	CREW: RFP, PHH	

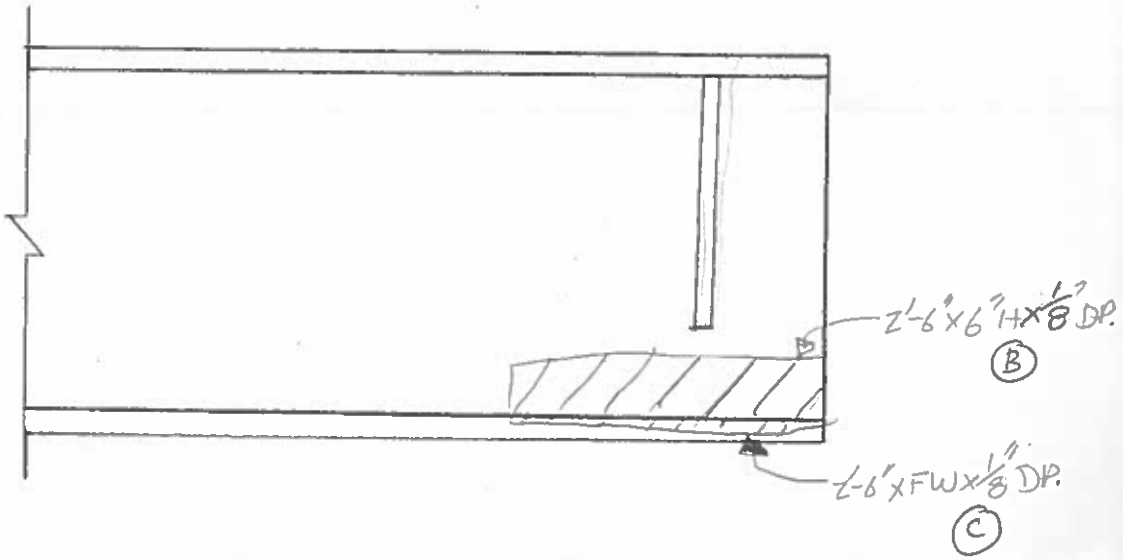

SPAN L, BEAM 9
WEST ELEV. AT P11

• TOP OF WEB TIPPED EAST 3/16"

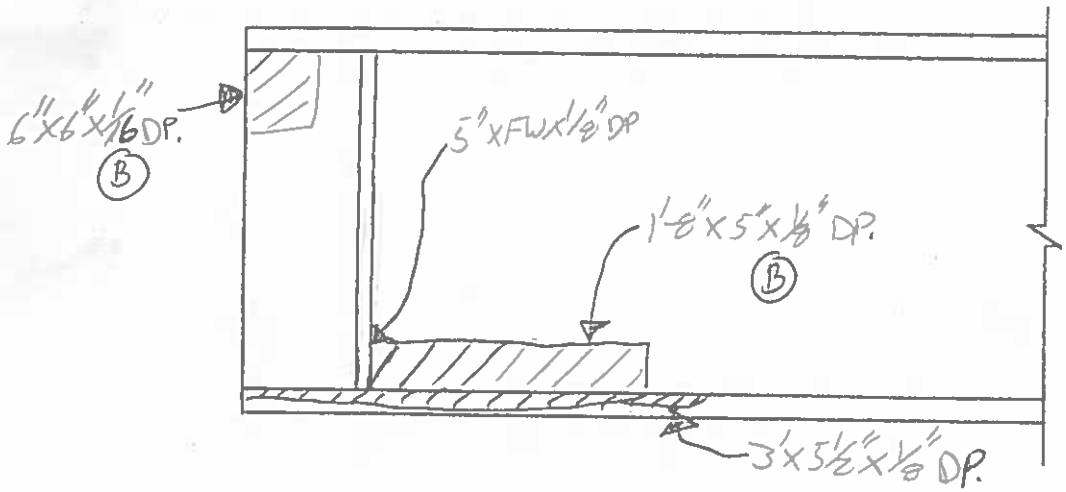

SPAN L, BEAM 9
EAST ELEV. AT P11

REVISION 1	DATE	CREW	COMPANY	REVISION 3	DATE	CREW	COMPANY
REVISION 2	DATE	CREW	COMPANY	REVISION 4	DATE	CREW	COMPANY

Dewberry
59 Elm Street, Suite 101
New Haven, CT 06510

FIELD NOTES

JOB NO.

BRIDGE NO: 03014 A

DATE: 7/15/14

SHEET OF

CREW: RFP, PHH

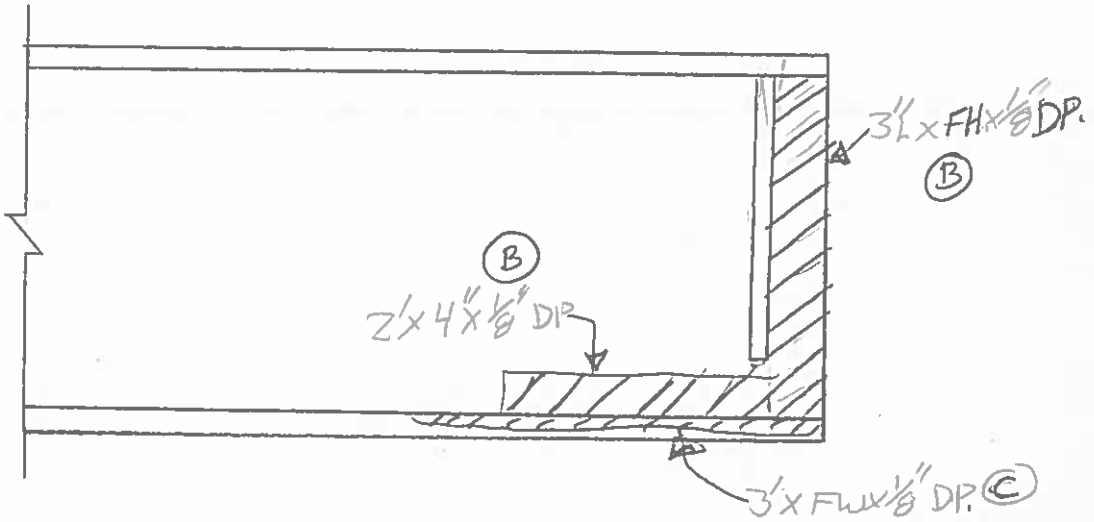

SPAN L, BEAM 10
WEST ELEV. AT P11

• WEB BOWED ⅛" WEST @ TOP

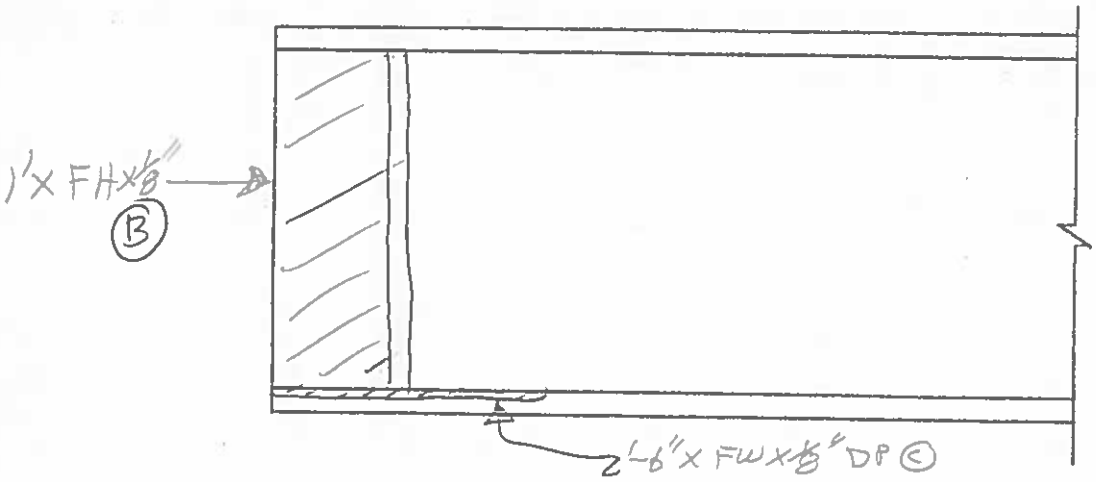

SPAN L, BEAM 10
EAST ELEV. AT P11

REVISION 1	DATE	CREW	COMPANY	REVISION 3	DATE	CREW	COMPANY
REVISION 2	DATE	CREW	COMPANY	REVISION 4	DATE	CREW	COMPANY

Dewberry
59 Elm Street, Suite 101
New Haven, CT 06510

FIELD NOTES	JOB NO.	BRIDGE NO: 03014 A
	DATE: 7/15/14	SHEET OF
	CREW: RFP, PHH	

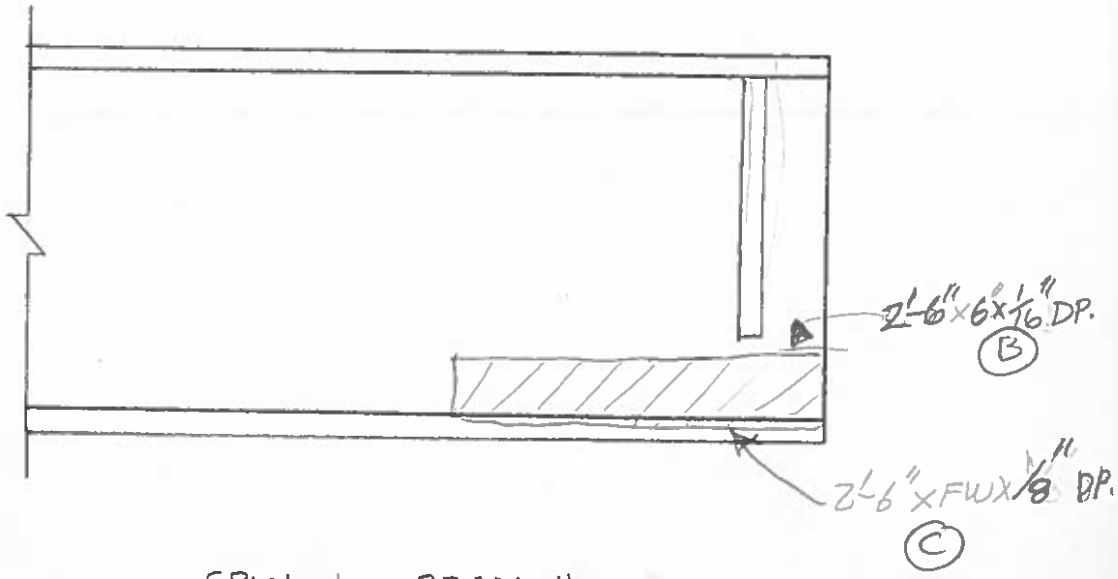

SPAN L, BEAM 11
WEST ELEV. AT P11

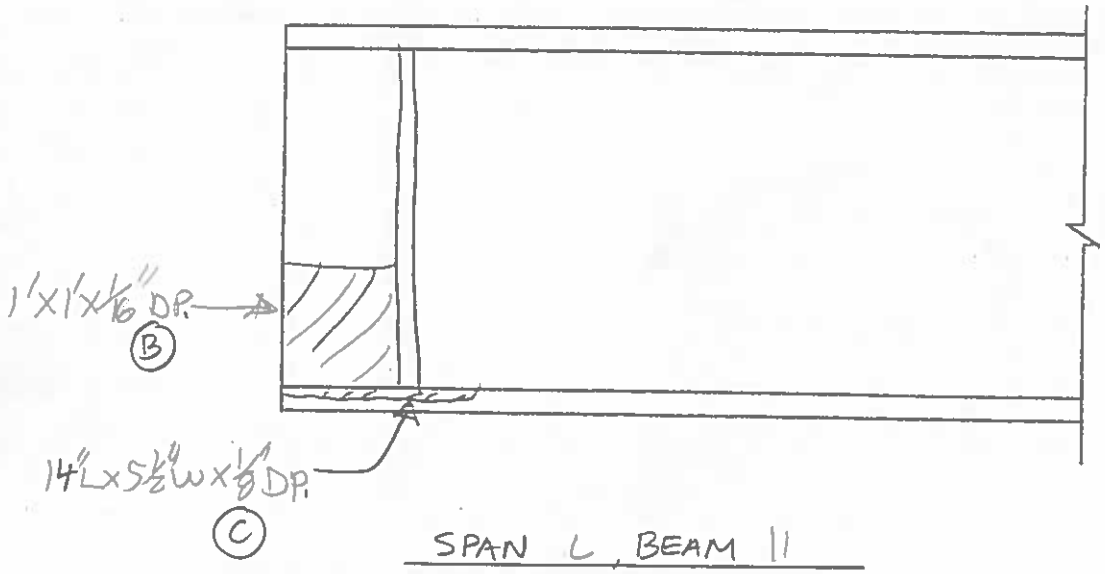

SPAN L, BEAM 11
EAST ELEV. AT P11

REVISION 1	DATE	CREW	COMPANY	REVISION 3	DATE	CREW	COMPANY
REVISION 2	DATE	CREW	COMPANY	REVISION 4	DATE	CREW	COMPANY

Dewberry
59 Elm Street, Suite 101
New Haven, CT 06510

FIELD NOTES

JOB NO.

DATE: 7/15/14

BRIDGE NO: 03014A

SHEET OF

CREW: RFP, PHH

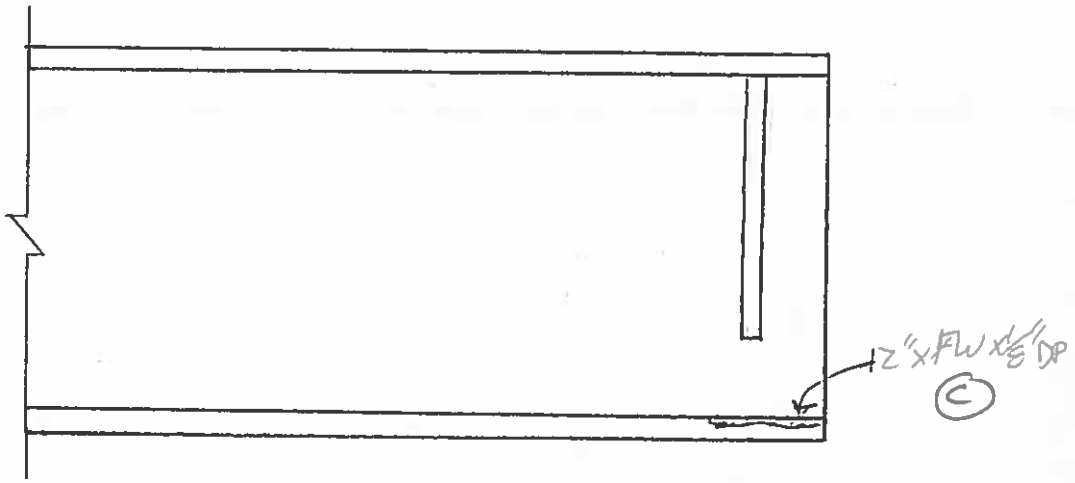

SPAN L, BEAM 12
WEST ELEV. AT P11

"TOP OF WEB BOWED 3/16" WEST

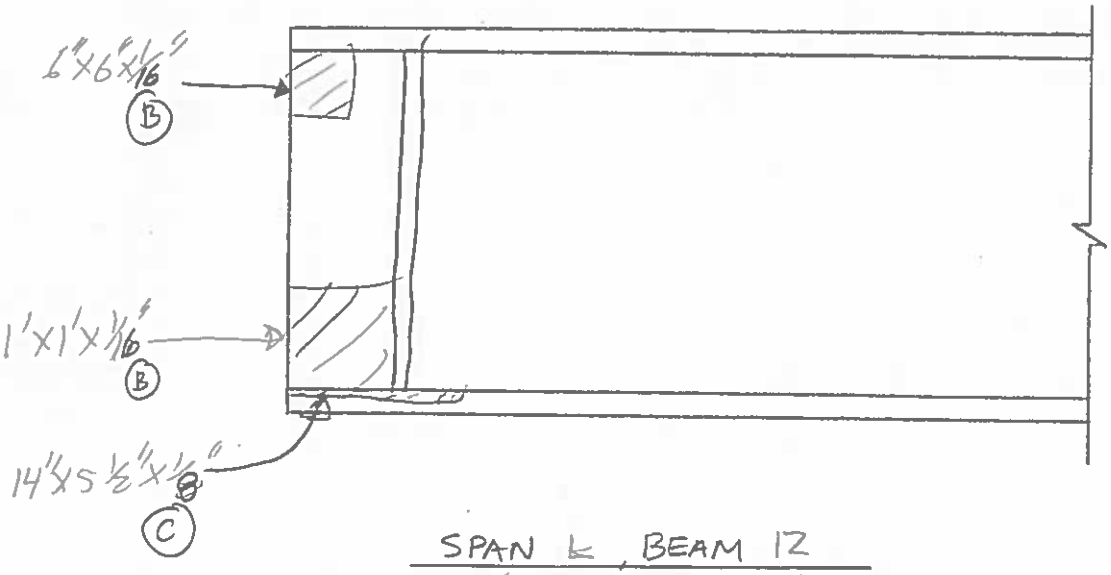

SPAN L, BEAM 12
EAST ELEV. AT P11

REVISION	DATE	CREW	COMPANY	REVISION	DATE	CREW	COMPANY
1				3			
2				4			

Dewberry
59 Elm Street, Suite 101
New Haven, CT 06510

FIELD NOTES

JOB NO.

BRIDGE NO: 03014 A

DATE: 7/15/14

SHEET OF

CREW: RFP, PHH

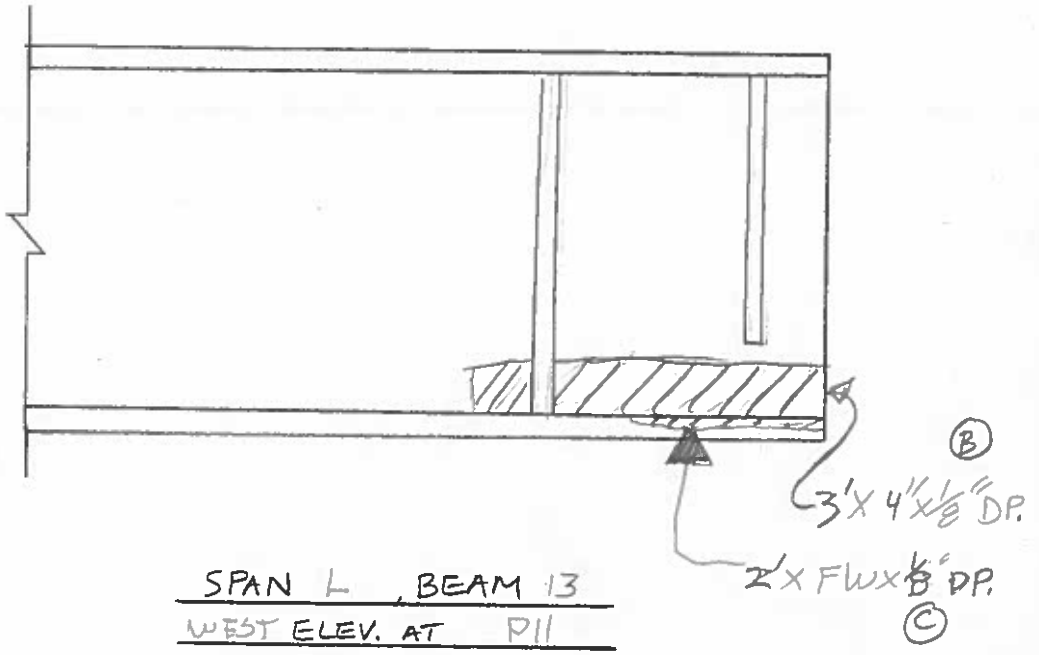

SPAN L, BEAM 13
WEST ELEV. AT P11

- TOP OF WEB TIPPED WEST 3/16"

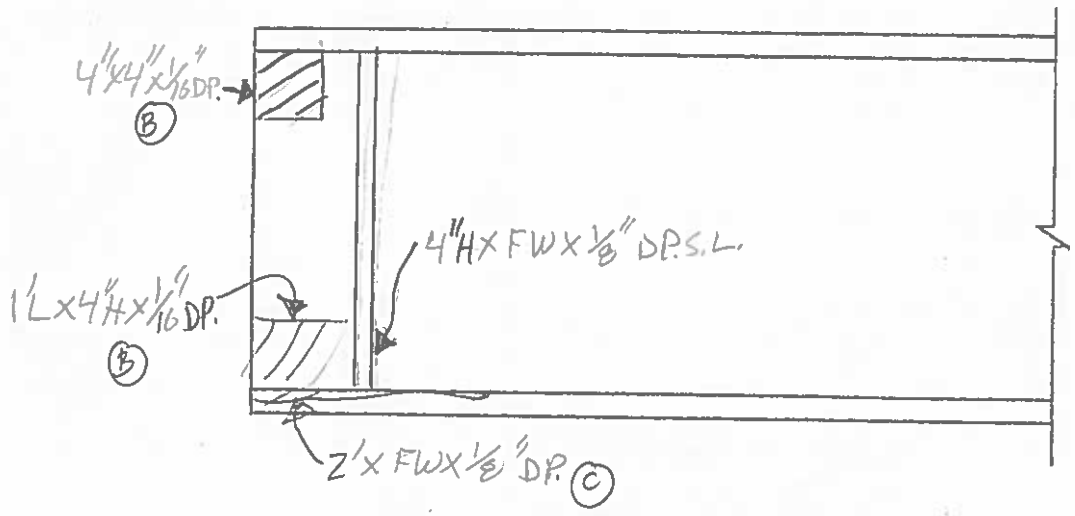

SPAN L, BEAM 13
EAST ELEV. AT P11

REVISION	DATE	CREW	COMPANY	REVISION	DATE	CREW	COMPANY
1				3			
2				4			

Dewberry	FIELD NOTES	JOB NO.	BRIDGE NO: 03014 A
59 Elm Street, Suite 101 New Haven, CT 06510		DATE: 7/15/14	SHEET OF
		CREW: RFP, PHH	

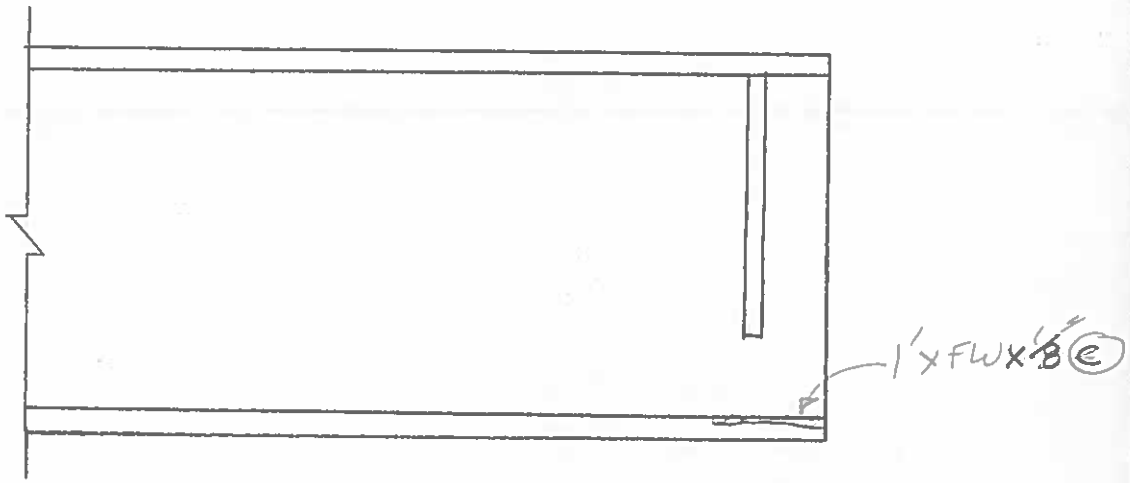

SPAN L, BEAM 14
WEST ELEV. AT P11

• WEB BOWED 1/4" WEST

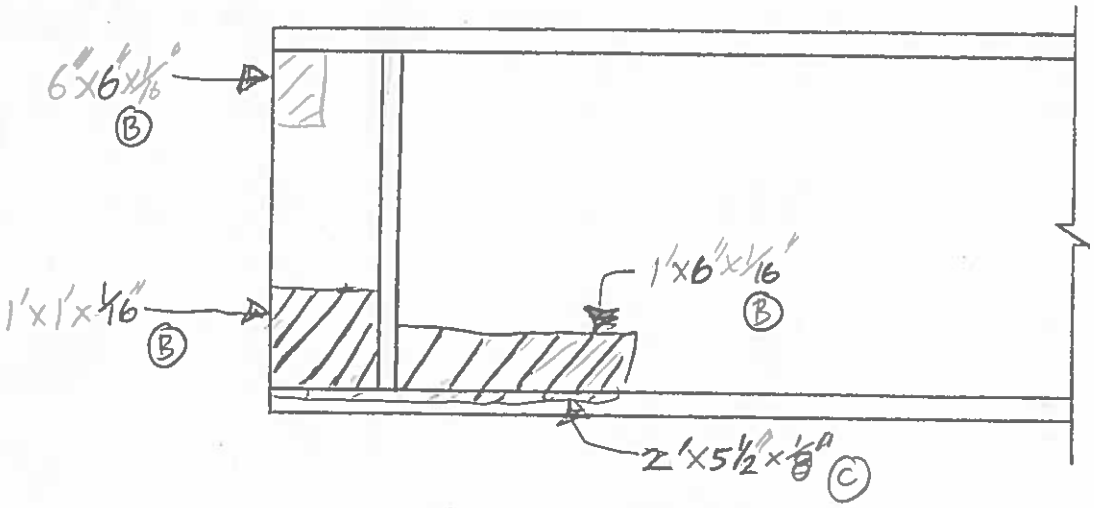

SPAN L, BEAM 14
EAST ELEV. AT P11

REVISION 1	DATE	CREW	COMPANY	REVISION 3	DATE	CREW	COMPANY
REVISION 2	DATE	CREW	COMPANY	REVISION 4	DATE	CREW	COMPANY

Dewberry
59 Elm Street, Suite 101
New Haven, CT 06510

FIELD NOTES	JOB NO.	BRIDGE NO: 03014 A
	DATE: 7/15/14	SHEET OF
	CREW:	

• WEB BOWED 3/16" EAST

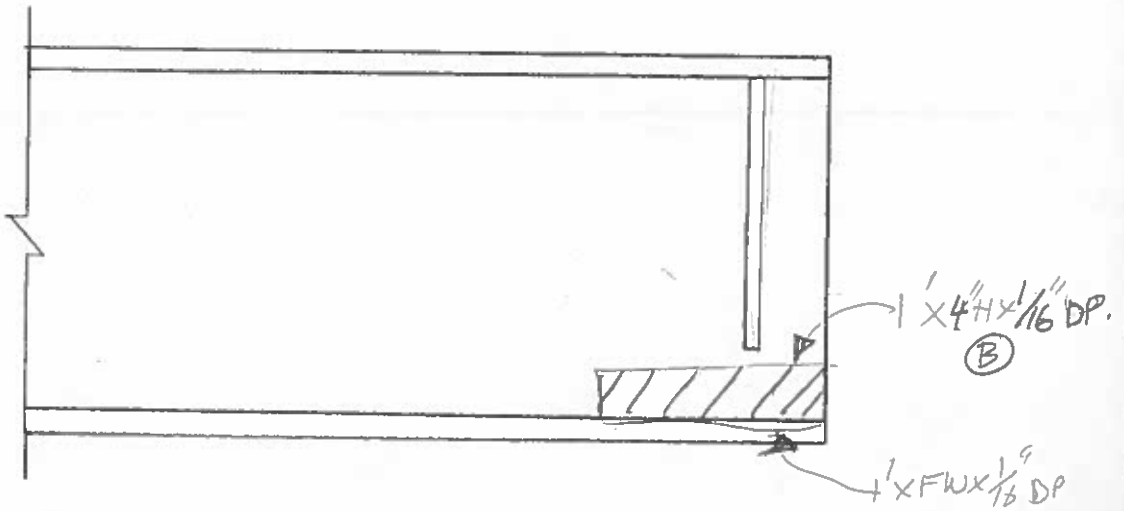

SPAN L , BEAM 15
WEST ELEV. AT P11

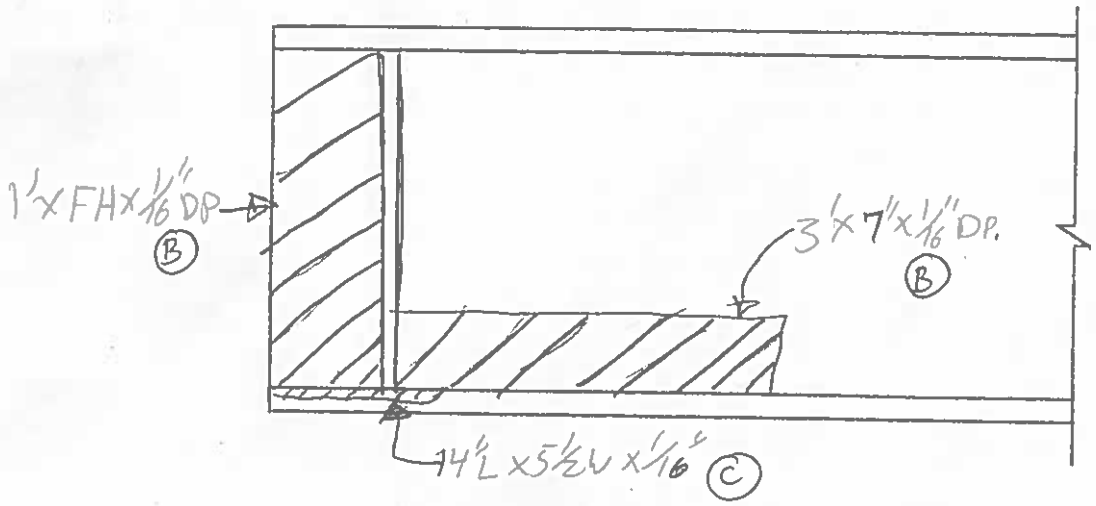

SPAN L , BEAM 15
EAST ELEV. AT P11

REVISION	DATE	CREW	COMPANY	REVISION	DATE	CREW	COMPANY
1				3			
2				4			

Dewberry
59 Elm Street, Suite 101
New Haven, CT 06510

FIELD NOTES

JOB NO.

BRIDGE NO: 03014A

DATE: 7/15/14

SHEET OF

CREW: RFP, PHA

- TOP OF WEB TIPPED EAST 1/4"

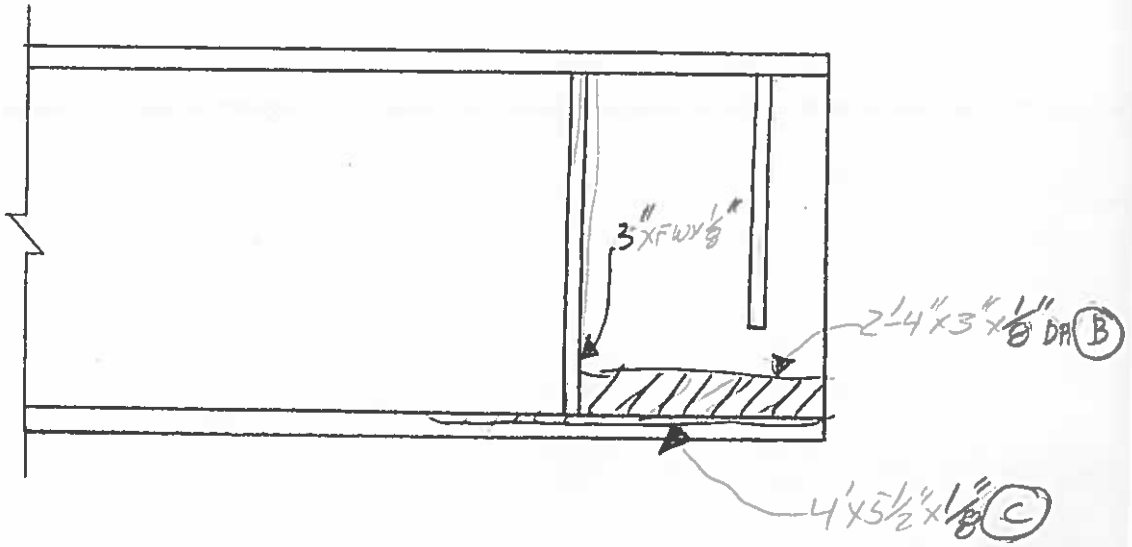

SPAN L, BEAM 16
WEST ELEV. AT P11

SPAN L, BEAM 16
EAST ELEV. AT P11

REVISION	DATE	CREW	COMPANY	REVISION	DATE	CREW	COMPANY
1				3			
2				4			

Dewberry
59 Elm Street, Suite 101
New Haven, CT 06510

FIELD NOTES

JOB NO.

BRIDGE NO: 03014 A

DATE: 7/14/14

SHEET OF

CREW: RFP, PHH

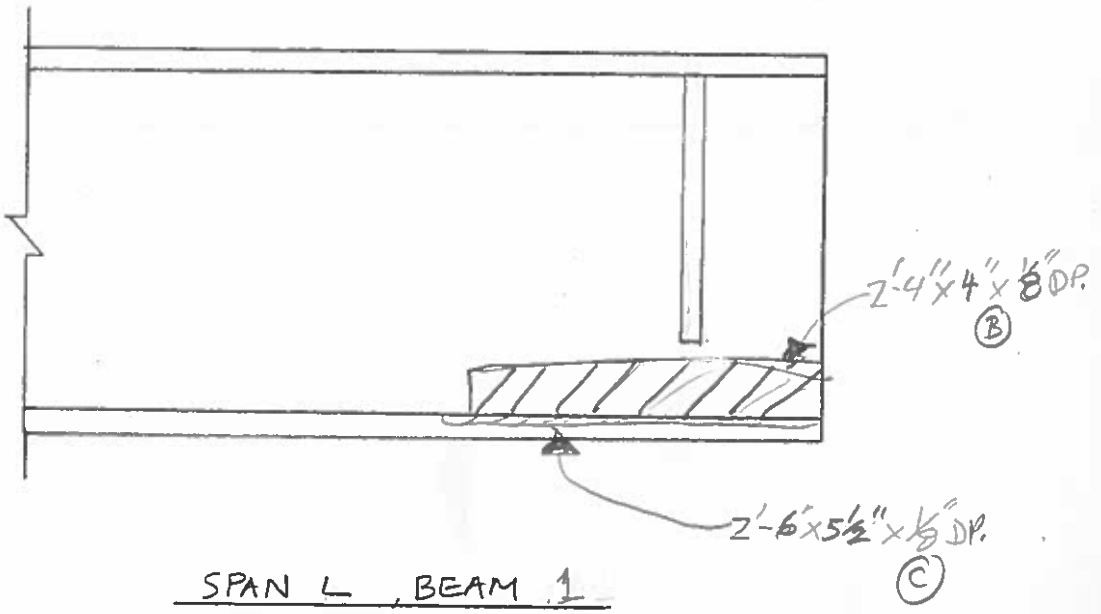

SPAN L, BEAM 1
EAST ELEV. AT P12

- WEB BOWED WEST ⅛"

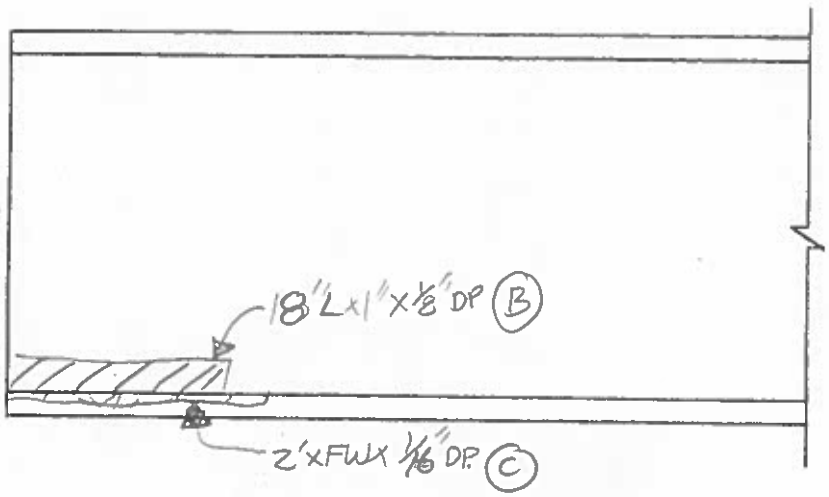

SPAN L, BEAM 1
WEST ELEV. AT P12

REVISION	DATE	CREW	COMPANY	REVISION	DATE	CREW	COMPANY
1				3			
2				4			

Dewberry
59 Elm Street, Suite 101
New Haven, CT 06510

FIELD NOTES

JOB NO.

BRIDGE NO: 03014A

DATE: 7/14/14

SHEET OF

CREW: RFP, PHH

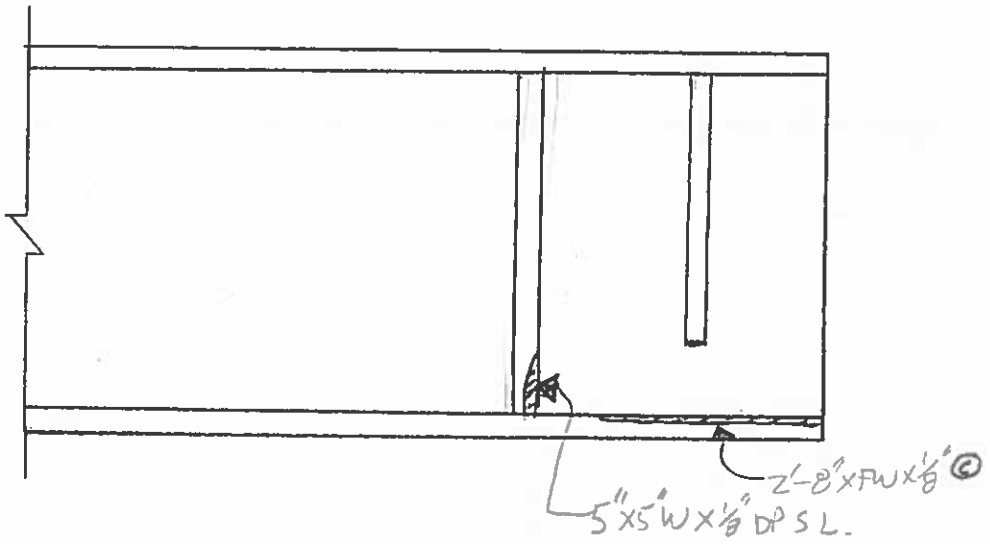

SPAN L, BEAM 2
EAST ELEV. AT P12

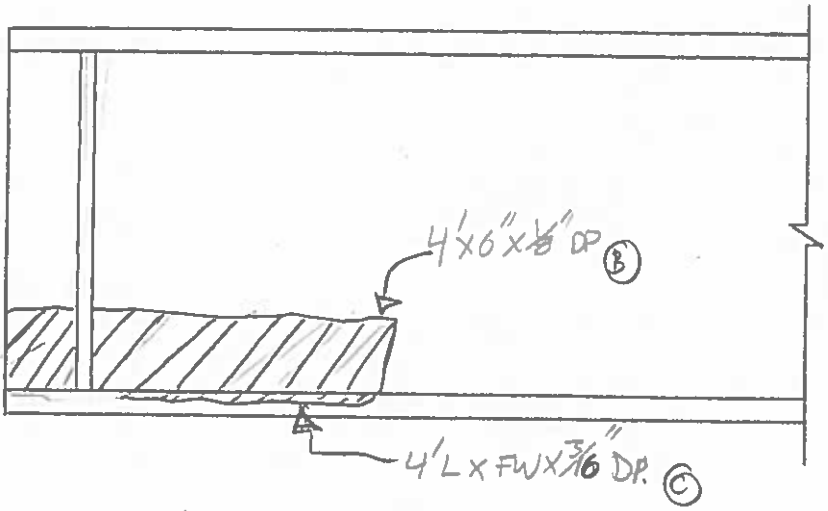

SPAN L, BEAM 2
WEST ELEV. AT P12

REVISION	DATE	CREW	COMPANY	REVISION	DATE	CREW	COMPANY
1				3			
2				4			

Dewberry
59 Elm Street, Suite 101
New Haven, CT 06510

FIELD NOTES	JOB NO.	BRIDGE NO: 03014 A
	DATE: 7/14/14	SHEET OF
	CREW: RFP, PHH	

• TOP OF WEB TIPPED 3/16" WEST

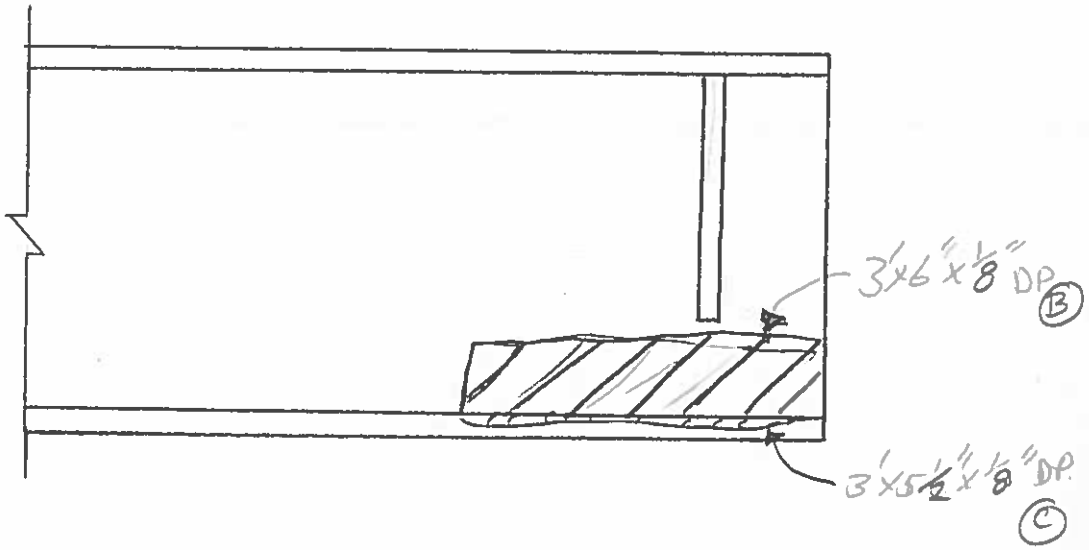

SPAN L, BEAM 3
EAST ELEV. AT P12

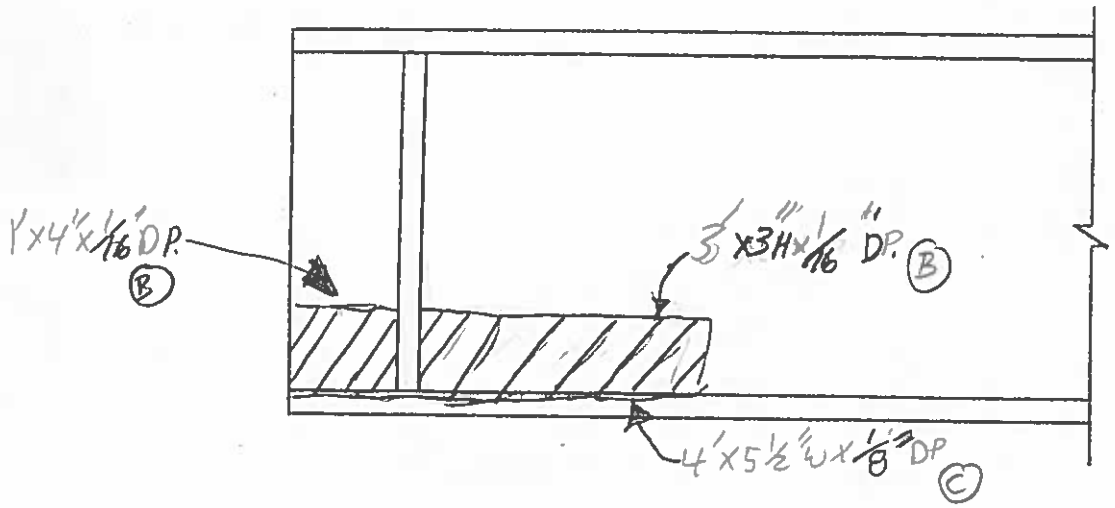

SPAN L, BEAM 3
WEST ELEV. AT P12

REVISION 1	DATE	CREW	COMPANY	REVISION 3	DATE	CREW	COMPANY
REVISION 2	DATE	CREW	COMPANY	REVISION 4	DATE	CREW	COMPANY

Dewberry® 59 Elm Street, Suite 101 New Haven, CT 06510	FIELD NOTES	JOB NO.	BRIDGE NO: 03014A
		DATE: 7/14/14	SHEET OF
		CREW: RFP, PHH	

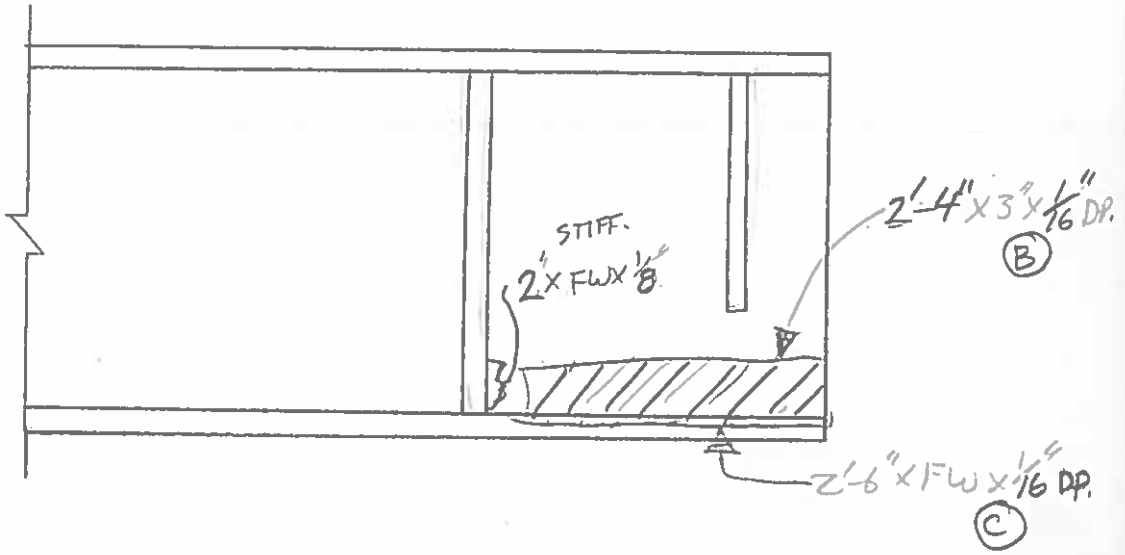

SPAN 2, BEAM 4
EAST ELEV. AT P12

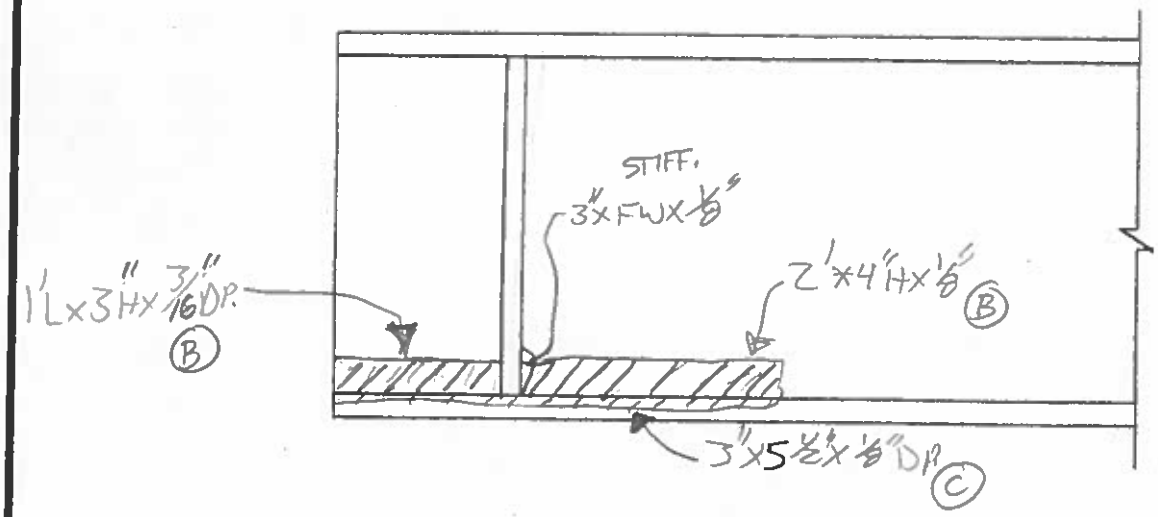

SPAN 4, BEAM 4
WEST ELEV. AT P12

REVISION 1	DATE	CREW	COMPANY	REVISION 3	DATE	CREW	COMPANY
REVISION 2	DATE	CREW	COMPANY	REVISION 4	DATE	CREW	COMPANY

Dewberry
59 Elm Street, Suite 101
New Haven, CT 06510

FIELD NOTES

JOB NO.

BRIDGE NO: 03014A

DATE: 7/14/14

SHEET OF

CREW: RFP, PHH

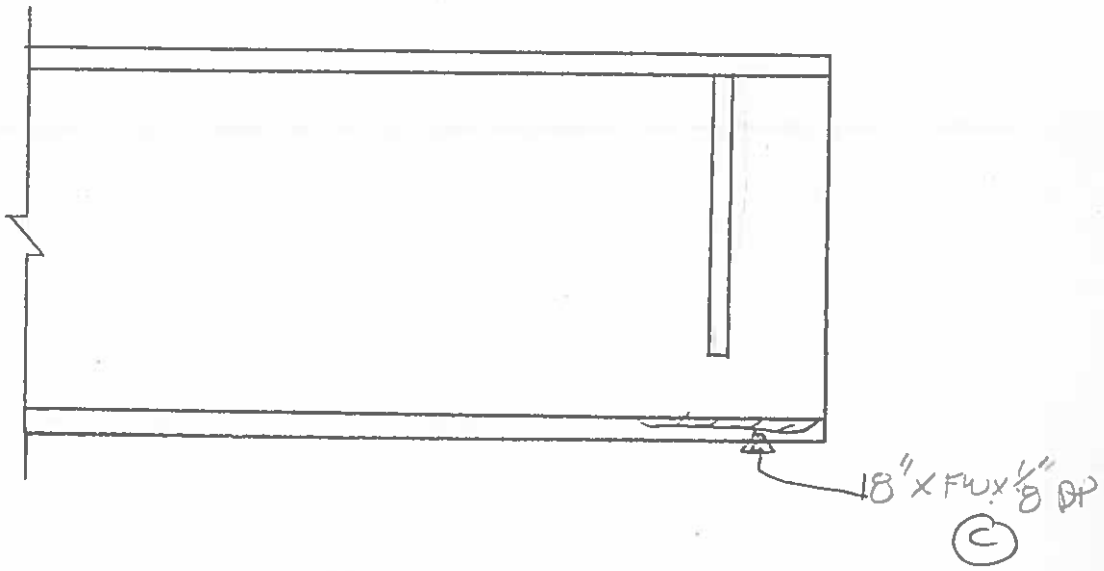

SPAN 4, BEAM 5
EAST ELEV. AT P12

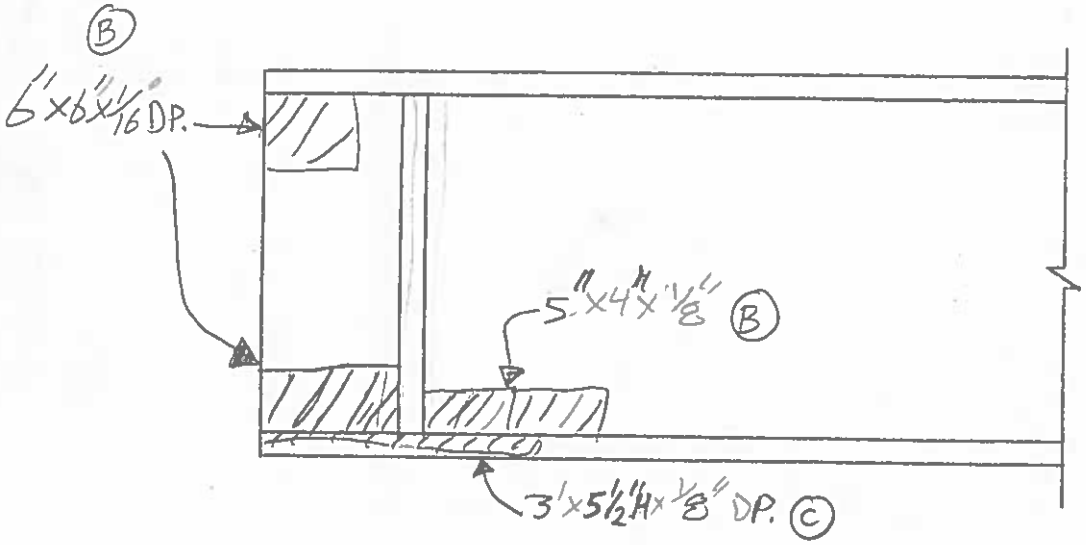

SPAN L, BEAM 5
WEST ELEV. AT P12

REVISION	DATE	CREW	COMPANY	REVISION	DATE	CREW	COMPANY
1				3			
2				4			

Dewberry
59 Elm Street, Suite 101
New Haven, CT 06510

FIELD NOTES

JOB NO.

BRIDGE NO: 03014 A

DATE: 7/14/14

SHEET OF

CREW: RFP, PHH

• WEB BOWED 3/16"

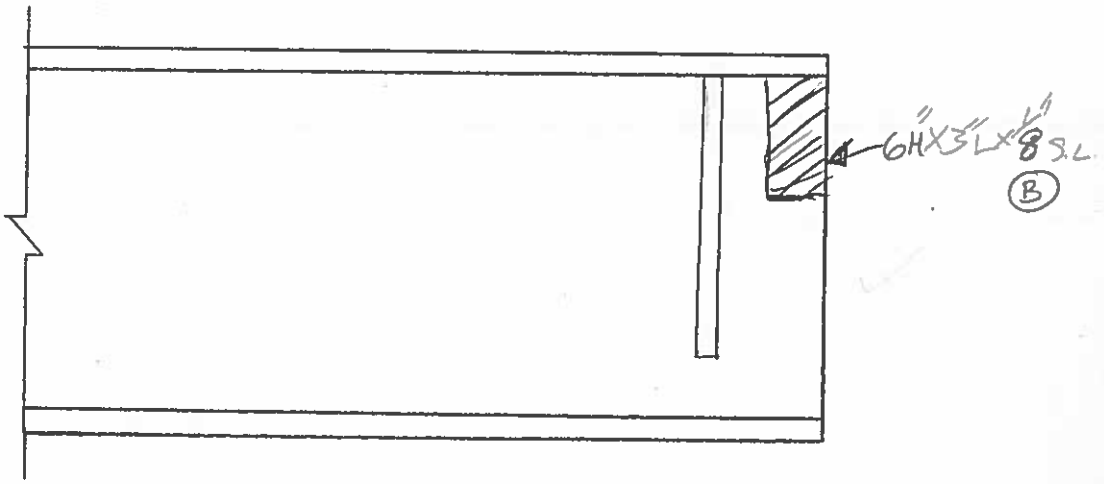

SPAN L, BEAM 6
EAST ELEV. AT P12

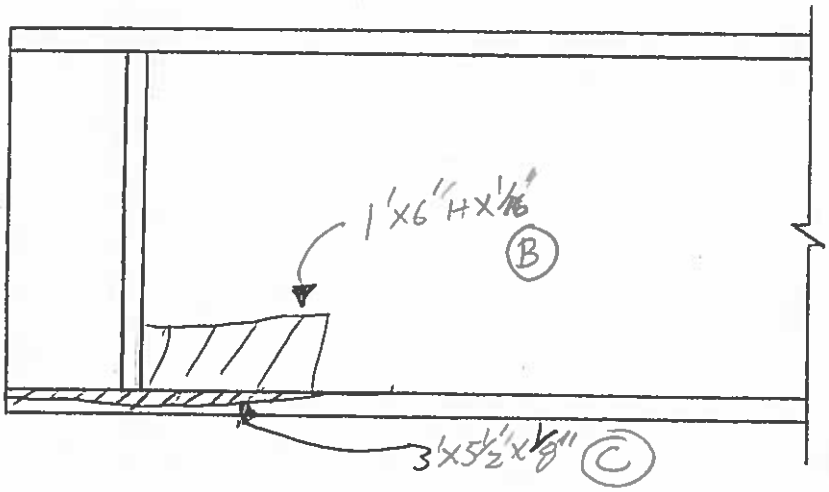

SPAN L, BEAM 6
WEST ELEV. AT P12

REVISION	DATE	CREW	COMPANY	REVISION	DATE	CREW	COMPANY
1				3			
2				4			

Dewberry
59 Elm Street, Suite 101
New Haven, CT 06510

FIELD NOTES	JOB NO.	BRIDGE NO: 03014 A
	DATE: 7/14/14	SHEET OF
	CREW: RFP, PHH	

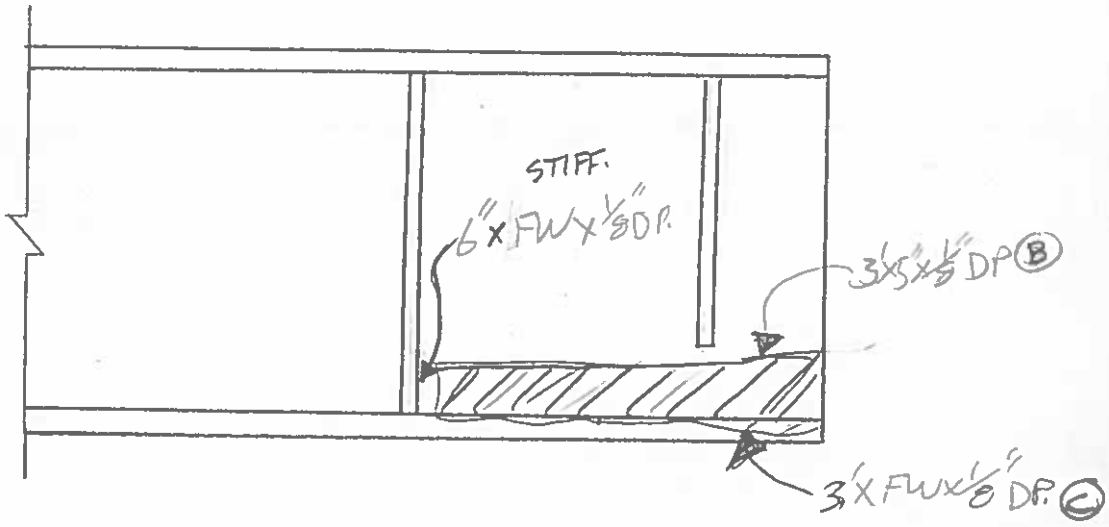

SPAN L, BEAM 7
EAST ELEV. AT P12

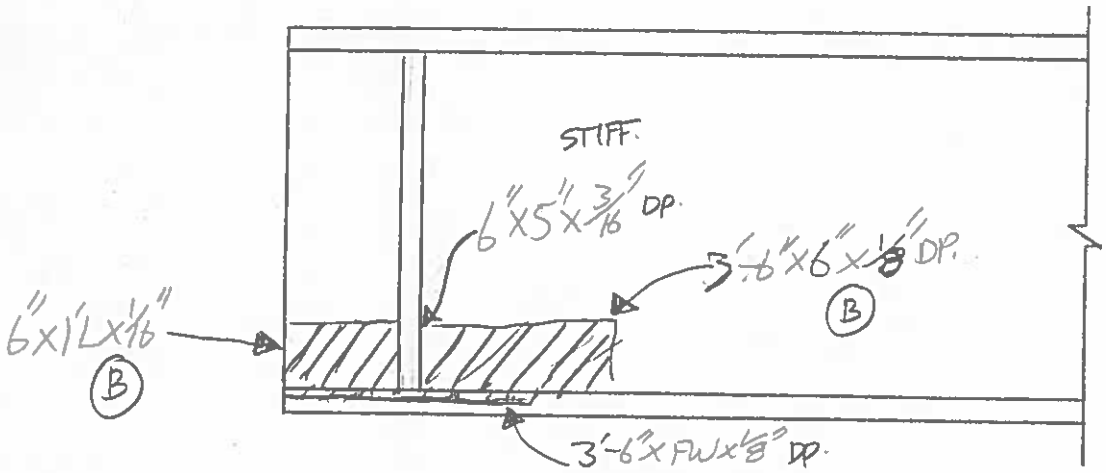

SPAN L, BEAM 7
WEST ELEV. AT P12

REVISION 1	DATE	CREW	COMPANY	REVISION 3	DATE	CREW	COMPANY
REVISION 2	DATE	CREW	COMPANY	REVISION 4	DATE	CREW	COMPANY

Dewberry
59 Elm Street, Suite 101
New Haven, CT 06510

FIELD NOTES	JOB NO.	BRIDGE NO: 03014 A
	DATE: 7/15/14	SHEET OF
	CREW: RFP, PHH	

o TOP OF WEB TIPPED 3/8" WEST OVER 2'

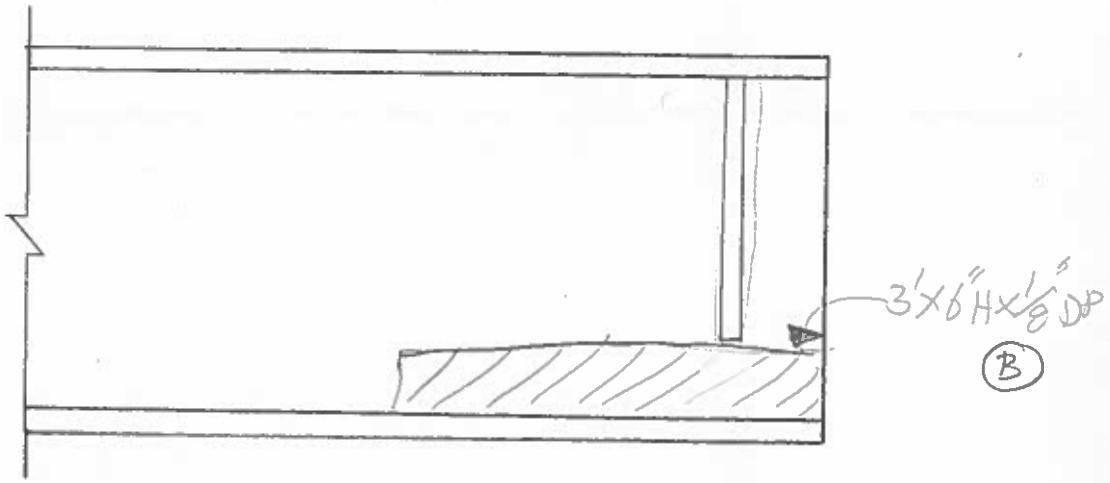

SPAN L, BEAM 8
EAST ELEV. AT P12

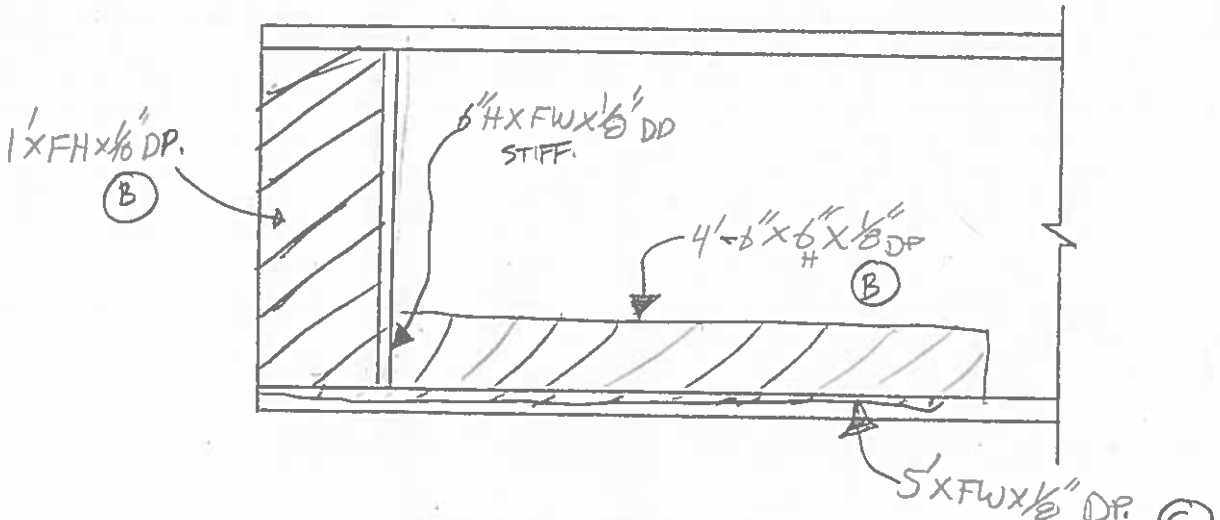

SPAN L, BEAM 8
WEST ELEV. AT P12

REVISION 1	DATE	CREW	COMPANY	REVISION 3	DATE	CREW	COMPANY
REVISION 2	DATE	CREW	COMPANY	REVISION 4	DATE	CREW	COMPANY

Dewberry
59 Elm Street, Suite 101
New Haven, CT 06510

FIELD NOTES

JOB NO.

BRIDGE NO: 03014 A

DATE: 7/15/14

SHEET OF

CREW: RFP, PHH

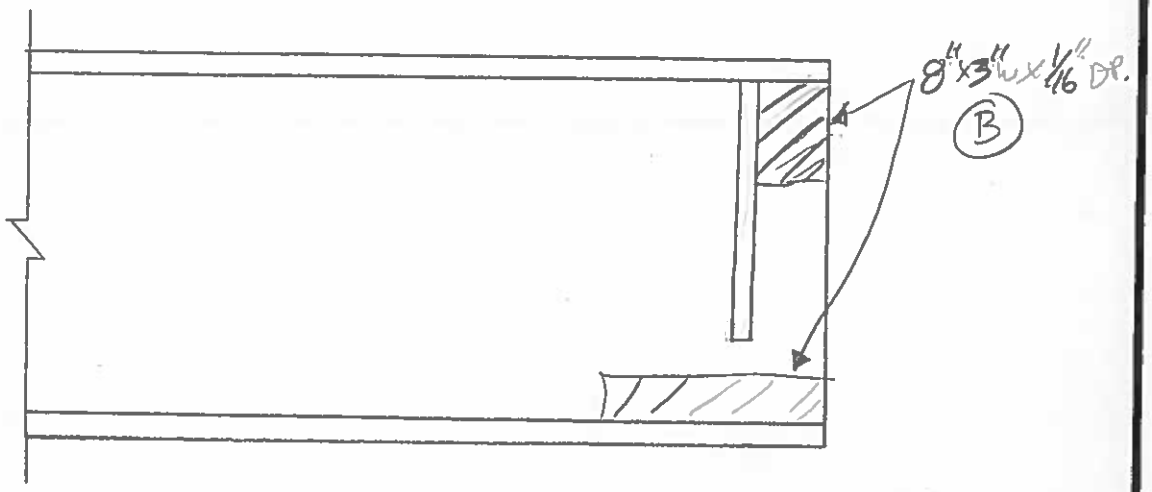

SPAN L, BEAM 9
EAST ELEV. AT P12

- WEB TOP BOWED 5/16" EAST

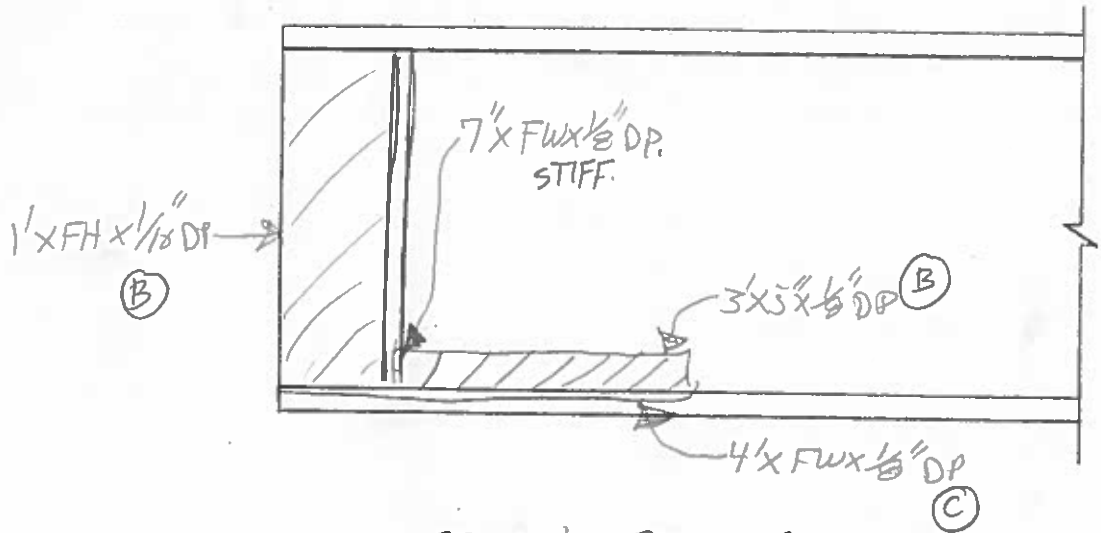

SPAN L, BEAM 9
WEST ELEV. AT P12

REVISION 1	DATE	CREW	COMPANY	REVISION 3	DATE	CREW	COMPANY
REVISION 2	DATE	CREW	COMPANY	REVISION 4	DATE	CREW	COMPANY

Dewberry
59 Elm Street, Suite 101
New Haven, CT 06510

FIELD NOTES

JOB NO.

BRIDGE NO: 03014A

DATE: 7/15/14

SHEET OF

CREW: RFP, PHH

• WEB BOWED 1/4" EAST

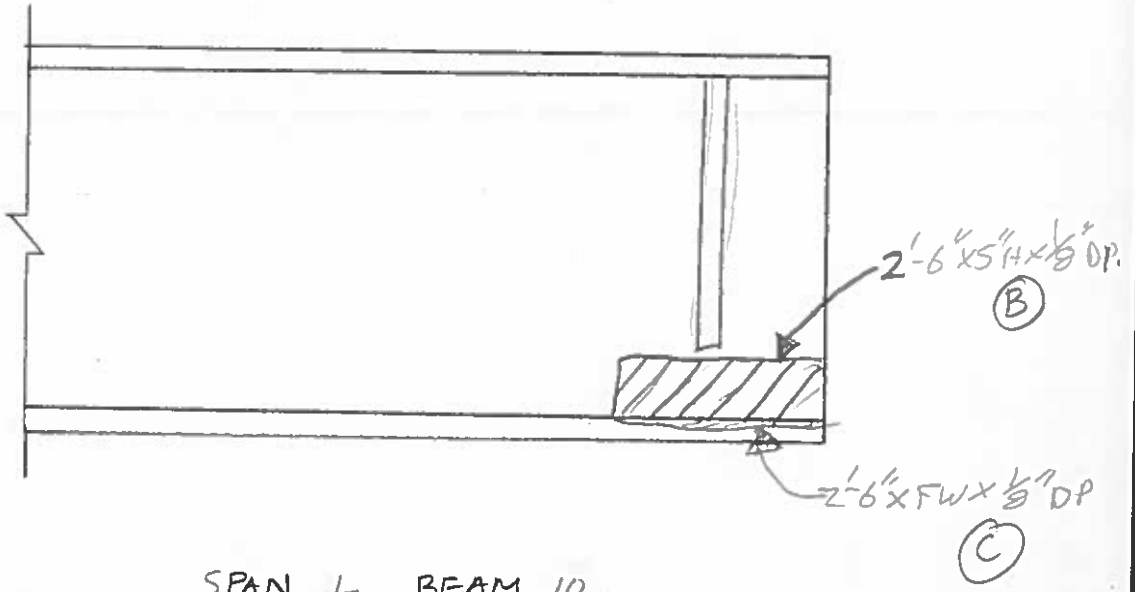

SPAN L, BEAM 10
EAST ELEV. AT P12

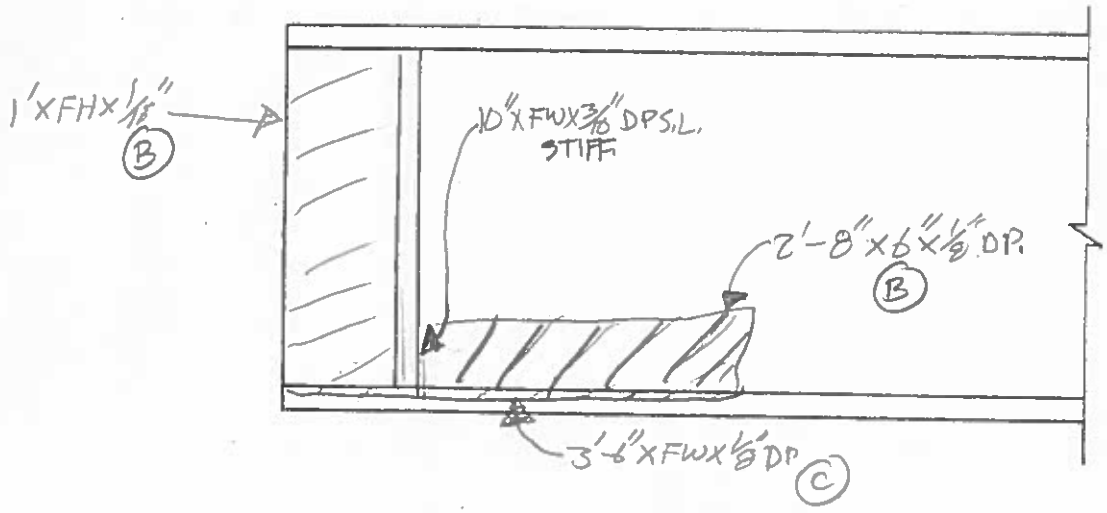

SPAN L, BEAM 10
WEST ELEV. AT P12

REVISION	DATE	CREW	COMPANY	REVISION	DATE	CREW	COMPANY
1				3			
2				4			

Dewberry
59 Elm Street, Suite 101
New Haven, CT 06510

FIELD NOTES	JOB NO.	BRIDGE NO: 03014 A
	DATE: 7/15/14	SHEET OF
	CREW: RFP, PHH	

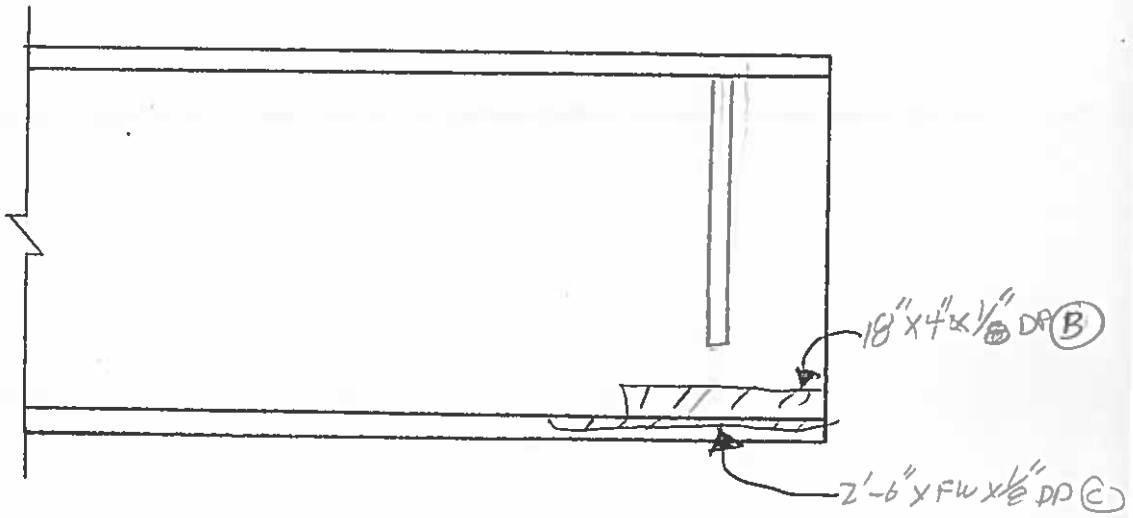

SPAN L, BEAM 11
EAST ELEV. AT P12

• WEB BOWED 1/4" EAST @ TOP

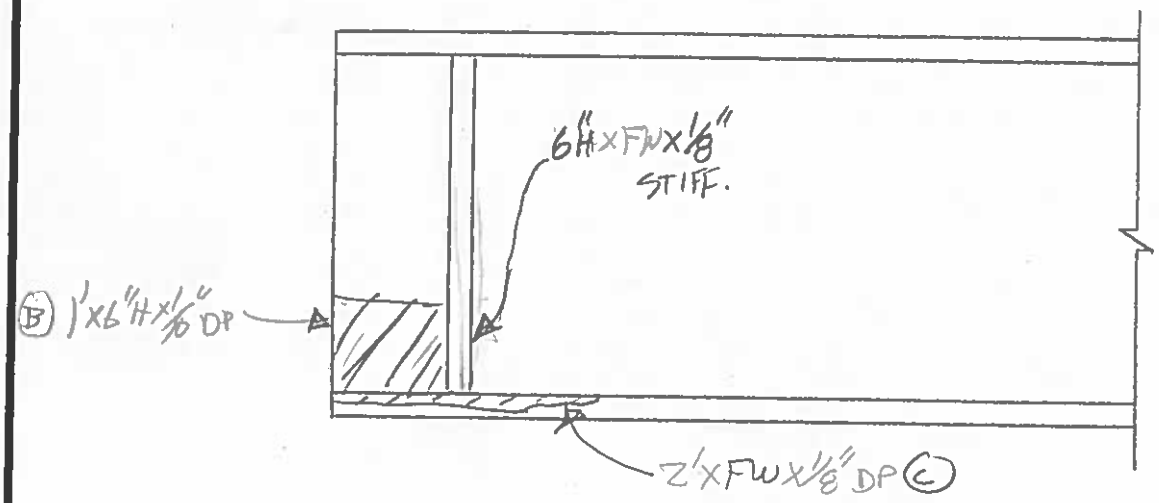

SPAN L, BEAM 11
WEST ELEV. AT P12

REVISION 1 DATE	CREW	COMPANY	REVISION 3 DATE	CREW	COMPANY
REVISION 2 DATE	CREW	COMPANY	REVISION 4 DATE	CREW	COMPANY

Dewberry
59 Elm Street, Suite 101
New Haven, CT 06510

FIELD NOTES

JOB NO.

BRIDGE NO: 03014 A

DATE: 7/15/14

SHEET OF

CREW: RFP, PHH

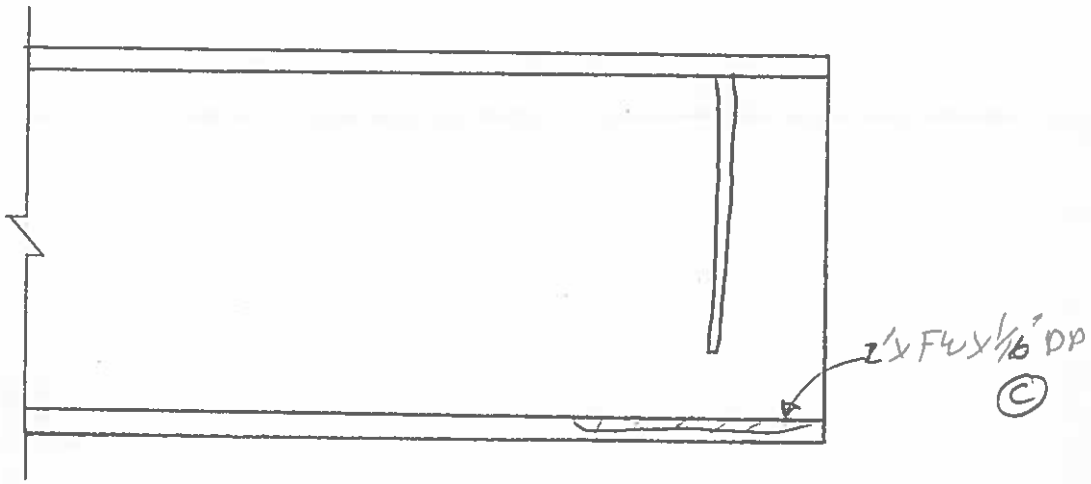

SPAN L, BEAM 12
EAST ELEV. AT P12

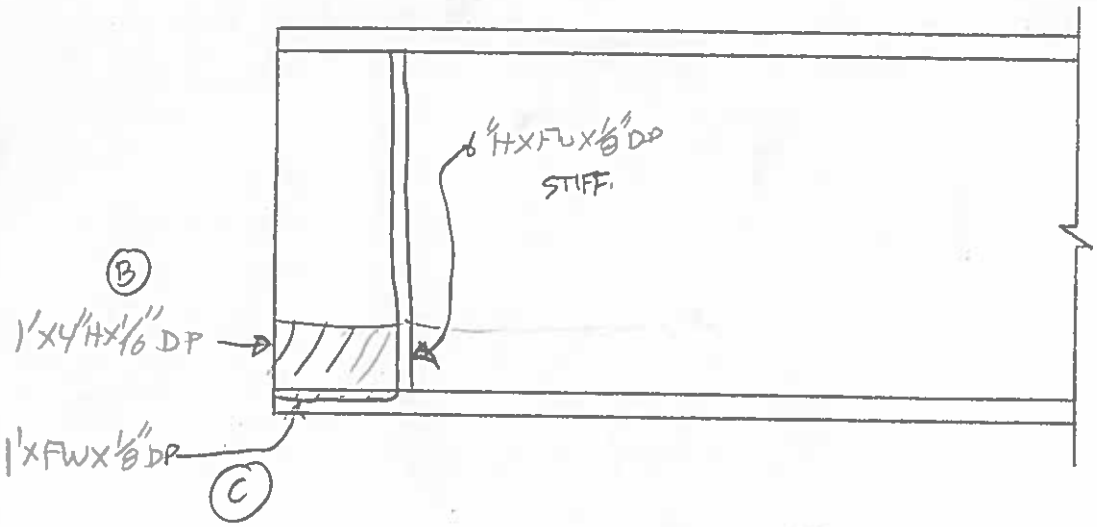

SPAN L, BEAM 12
WEST ELEV. AT P12

REVISION	DATE	CREW	COMPANY	REVISION	DATE	CREW	COMPANY
1				3			
2				4			

Dewberry
59 Elm Street, Suite 101
New Haven, CT 06510

FIELD NOTES	JOB NO.	BRIDGE NO: 03014 A
	DATE: 7/15/14	SHEET OF
	CREW: RFP, PAH	

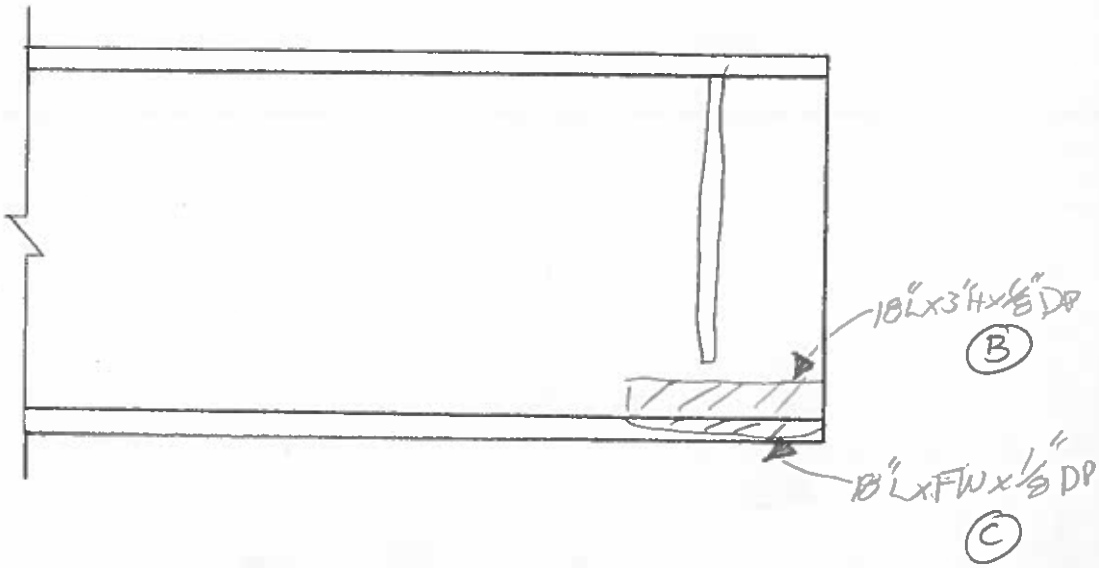

SPAN L, BEAM 13
EAST ELEV. AT P12

• WEB BOWED ¼" WEST @ VERY END

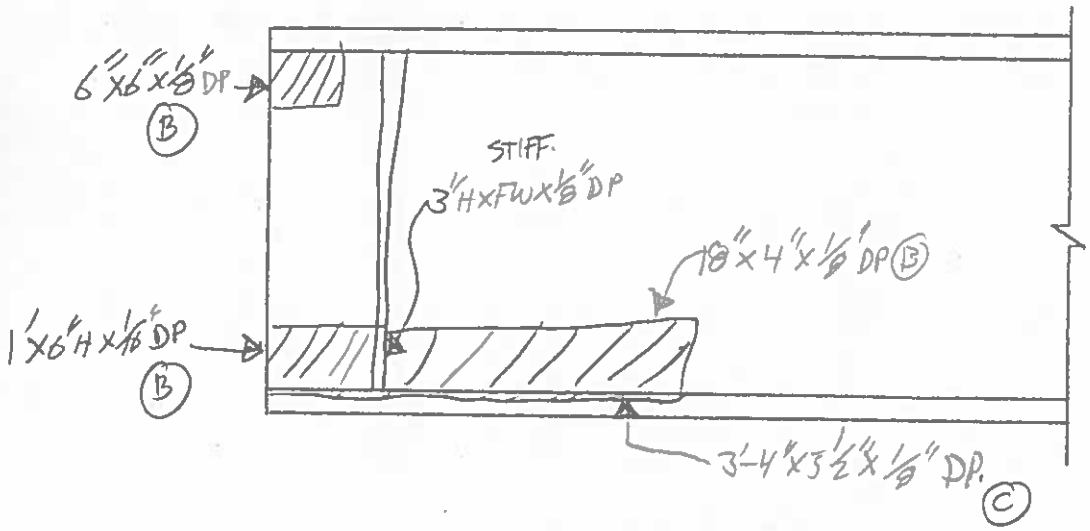

SPAN L, BEAM 13
WEST ELEV. AT P12

REVISION 1	DATE	CREW	COMPANY	REVISION 3	DATE	CREW	COMPANY
REVISION 2	DATE	CREW	COMPANY	REVISION 4	DATE	CREW	COMPANY

Dewberry
59 Elm Street, Suite 101
New Haven, CT 06510

FIELD NOTES

JOB NO.

BRIDGE NO: 03014 A

DATE: 7/15/14

SHEET OF

CREW: RFP, PHH

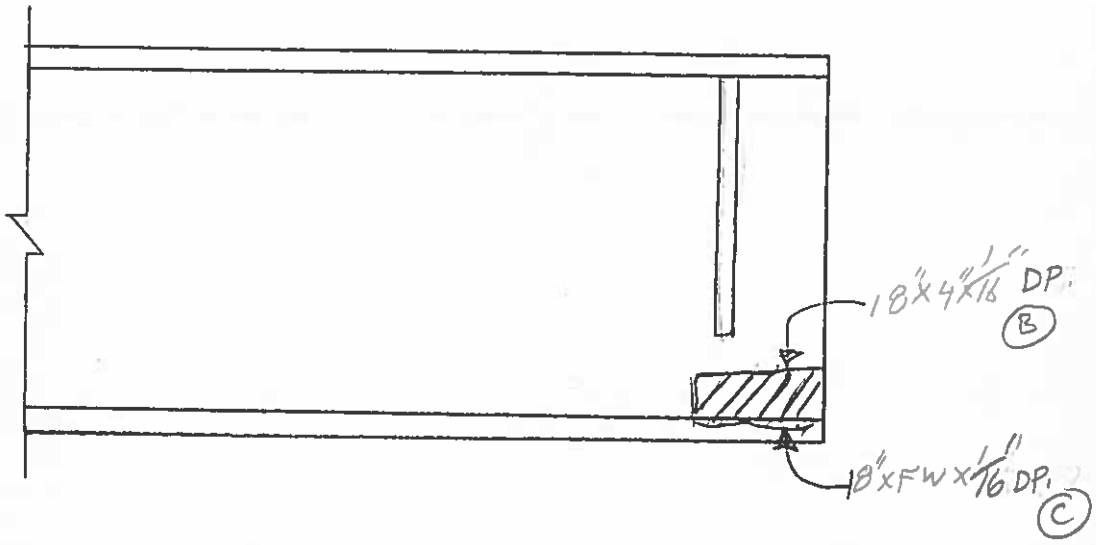

SPAN L, BEAM 14
EAST ELEV. AT P12

- TOP OF WEB TIPPED EAST 1/4"

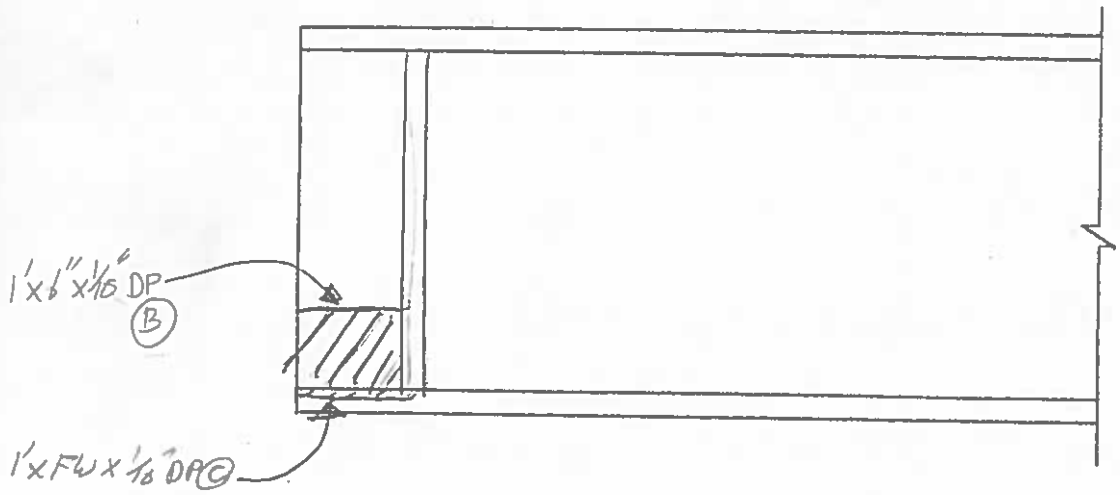

SPAN L, BEAM 14
WEST ELEV. AT P12

REVISION	DATE	CREW	COMPANY	REVISION	DATE	CREW	COMPANY
1				3			
2				4			

Dewberry
59 Elm Street, Suite 101
New Haven, CT 06510

FIELD NOTES

JOB NO.

BRIDGE NO: 03014 A

DATE: 7/14/2014

SHEET OF

CREW: RFP, PHH

- WEB BOWED 3/8" EAST

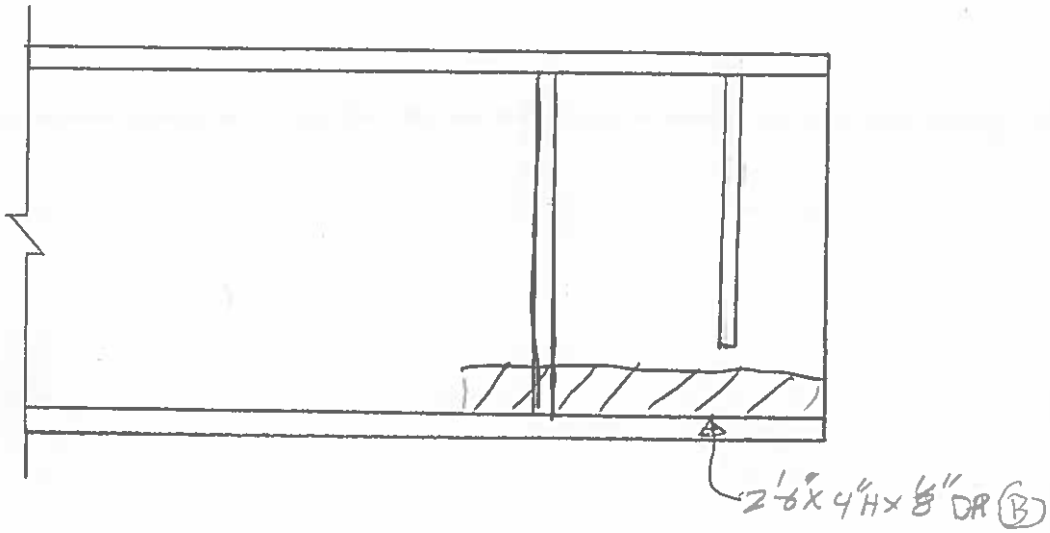

SPAN L, BEAM 15
EAST ELEV. AT P12

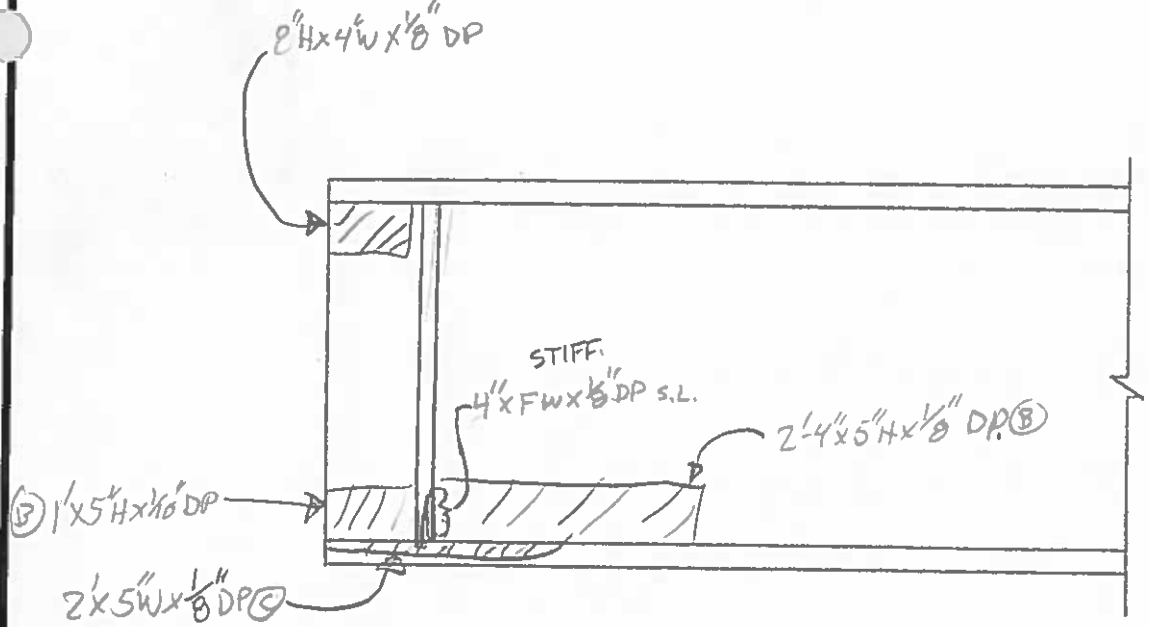

SPAN L, BEAM 15
WEST ELEV. AT P12

REVISION	DATE	CREW	COMPANY	REVISION	DATE	CREW	COMPANY
1				3			
2				4			

Dewberry
59 Elm Street, Suite 101
New Haven, CT 06510

FIELD NOTES

JOB NO.

BRIDGE NO: 03014 A

DATE: 11/15/14

SHEET OF

CREW: RFP, PHJ

• WEB BOWED 1/8" EAST

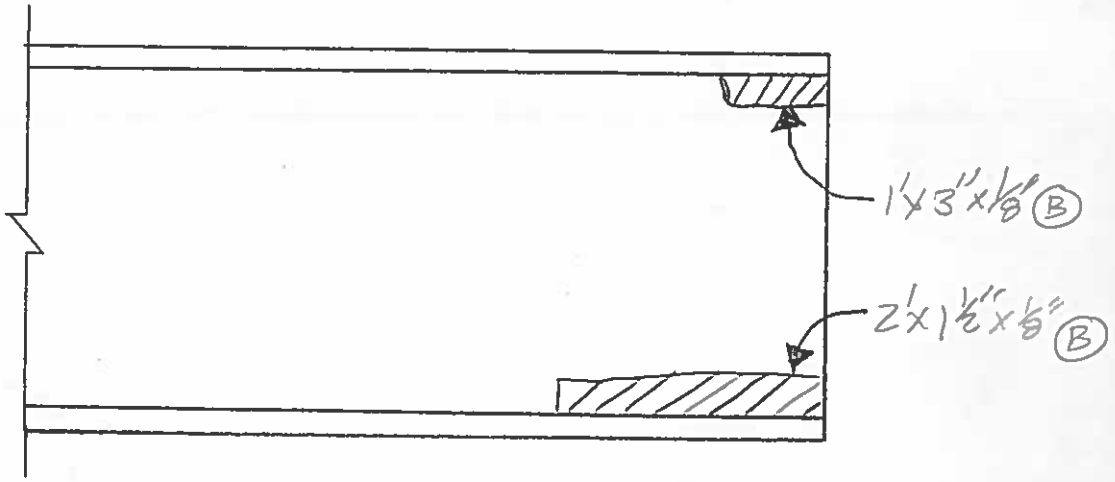

SPAN L, BEAM 16
EAST ELEV. AT P12

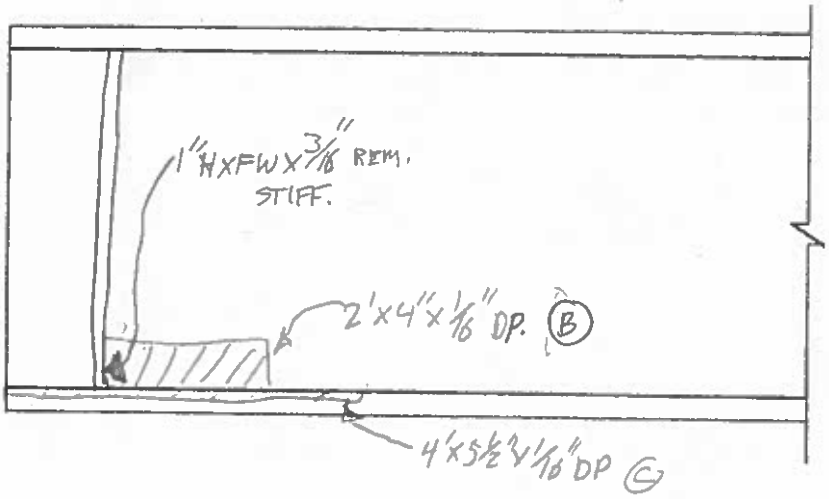

SPAN L, BEAM 16
WEST ELEV. AT P12

REVISION	DATE	CREW	COMPANY	REVISION	DATE	CREW	COMPANY
1				3			
2				4			

SPAN M

FIELD NOTES

PREPARED BY: Garg Consulting Services, Inc.

PROJ. NO. 170-3013	BRIDGE NO. 3014A
DATE: 09/13/2010	SHEET 60 58
CREW: PDG, MD	

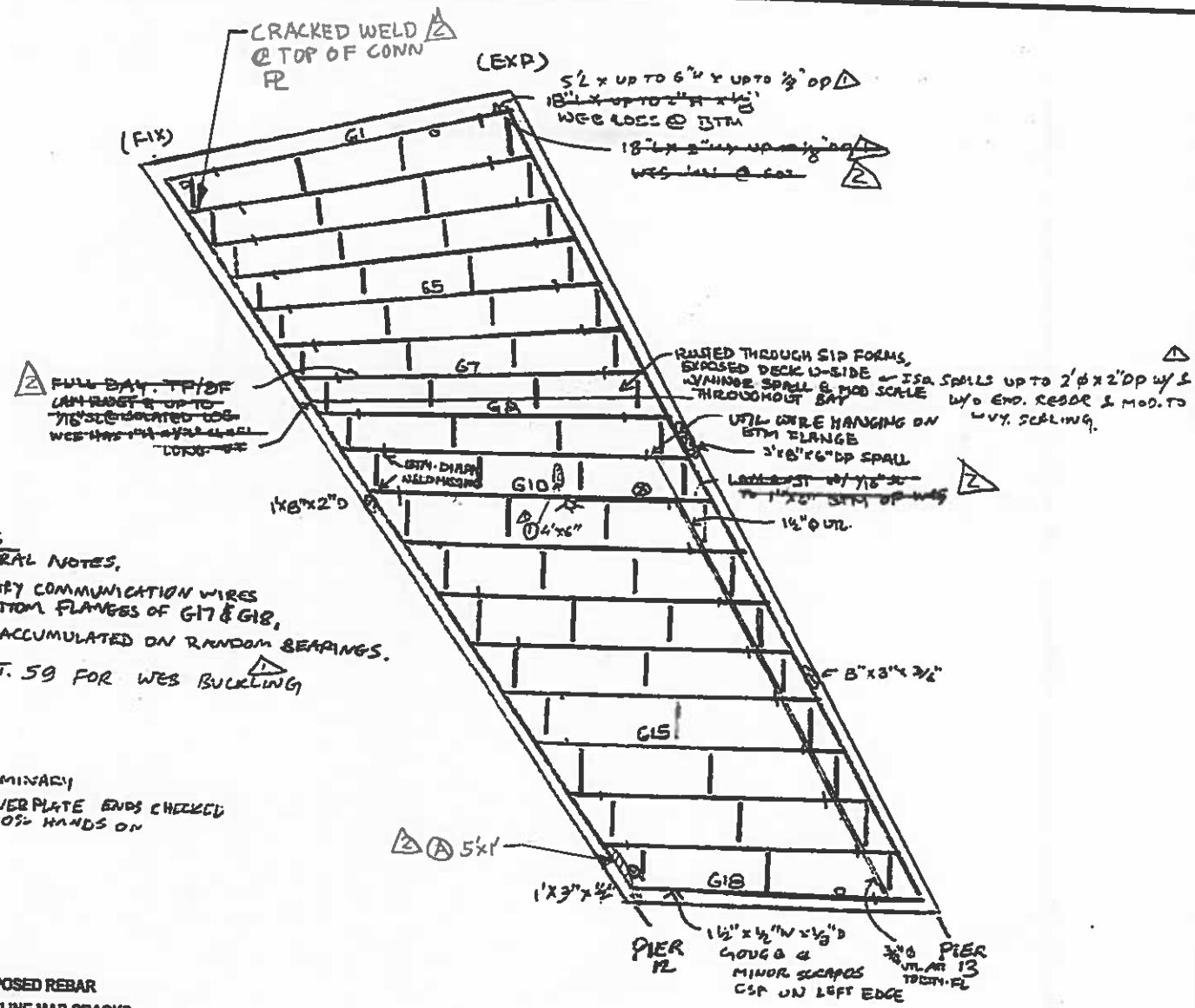

① = RUSTED THRU' SIP.

GENERAL NOTES

- SEE SPAN A GENERAL NOTES.
- THERE ARE TEMPORARY COMMUNICATION WIRES HANGING ON THE BOTTOM FLANGES OF G17 & G18.
- MINOR SILT/SAND ACCUMULATED ON RANDOM BEARINGS.
- SEE ADDITIONAL SHT. 59 FOR WEB BUCKLING

- UNDERBRIDGE LUMINARY
- BOTTOM FLANGE COVER PLATE ENDS CHECKED 100% HANDS ON
- SCUPPER
- PVC WEEP

LEGEND

- HOLLOW AREA
- SHALLOW REBAR
- SPALL AREA
- SPALL AREA WITH EXPOSED REBAR
- MAP CRACKS OR HAIRLINE MAP CRACKS
- HAIRLINE CRACKS (HLC) OR CRACKS (CR)
- HONEY COMB AREA
- SCALE AREA (HVY, MED, OR LT)

FRAMING PLAN SPAN M

2 SEE DETAIL SHEETS FOR MORE INFORMATION

Revision	Date	Crew	Company
1	9/3/12	PKG, AKC	GM2
2	7/14/14	RFP, PHH	DEW

Dewberry
59 Elm Street, Suite 101
New Haven, CT 06510

FIELD NOTES

JOB NO.

BRIDGE NO: 03014 A

DATE: 7/14/14

SHEET OF

CREW: RFP, PHH

*TOP OF WEB TIPPED WEST 3/16"

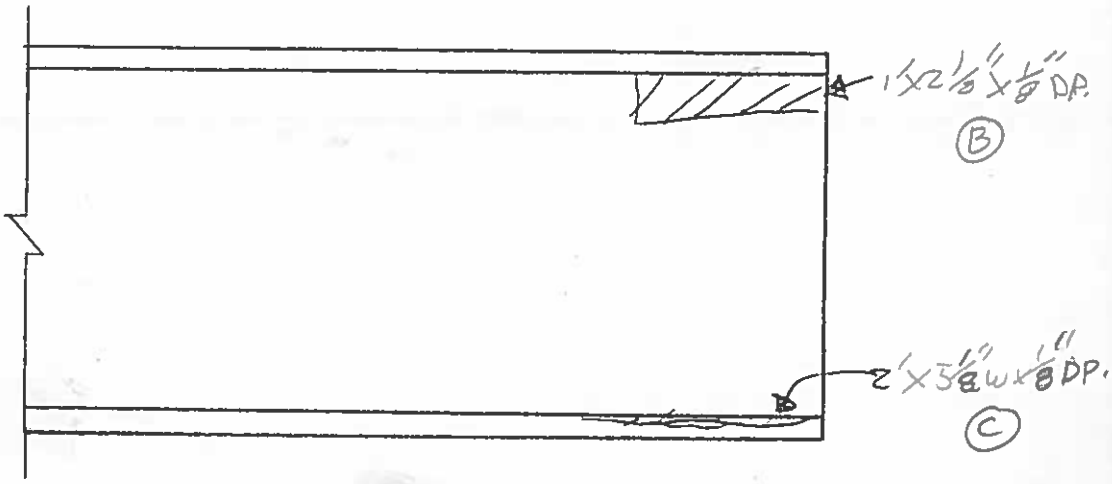

SPAN M, BEAM 1
WEST ELEV. AT P12

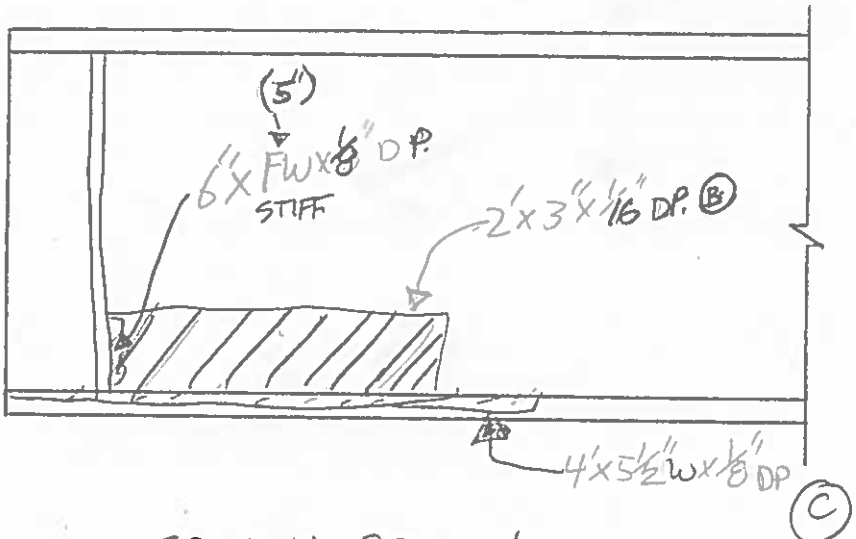

SPAN M, BEAM 1
EAST ELEV. AT P12

REVISION 1	DATE	CREW	COMPANY	REVISION 3	DATE	CREW	COMPANY
REVISION 2	DATE	CREW	COMPANY	REVISION 4	DATE	CREW	COMPANY

Dewberry
59 Elm Street, Suite 101
New Haven, CT 06510

FIELD NOTES

JOB NO.

BRIDGE NO: 03014 A

DATE: 7/14/14

SHEET OF

CREW: RPP, BHH

- WEB BOWED WEST 3/16"
- NO SECTION LOSS

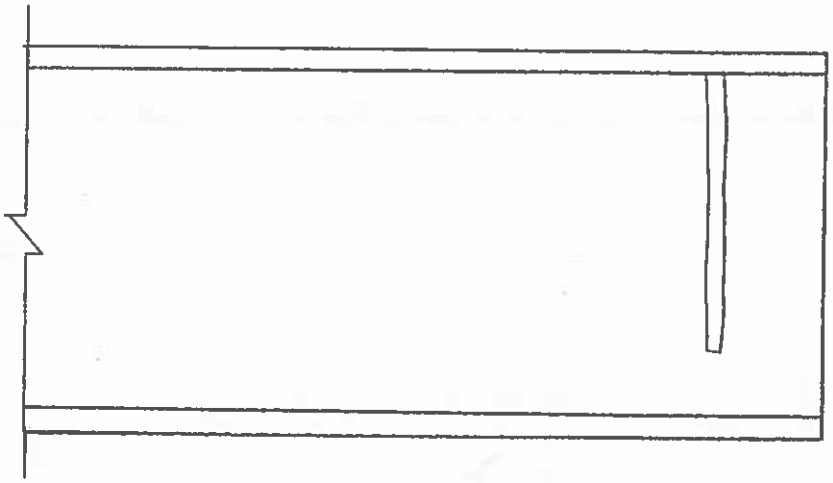

SPAN M, BEAM 2
WEST ELEV. AT P12

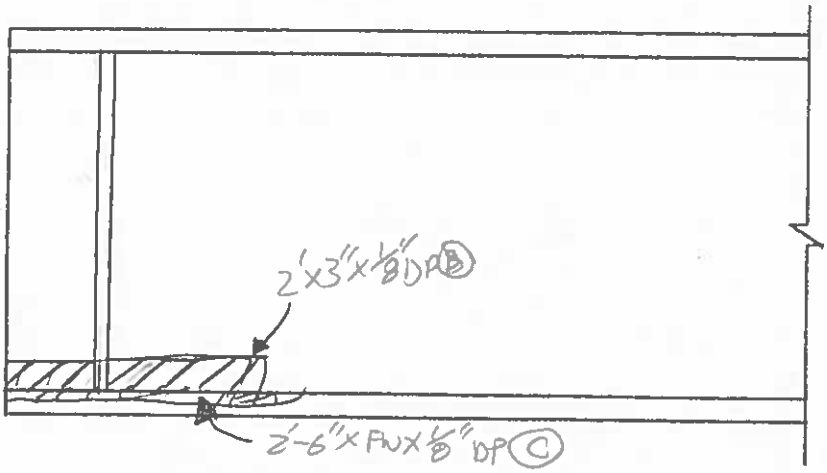

SPAN M, BEAM 2
EAST ELEV. AT P12

REVISION 1	DATE	CREW	COMPANY	REVISION 3	DATE	CREW	COMPANY
REVISION 2	DATE	CREW	COMPANY	REVISION 4	DATE	CREW	COMPANY

Dewberry
59 Elm Street, Suite 101
New Haven, CT 06510

FIELD NOTES

JOB NO.

BRIDGE NO: 03014 A

DATE: 7/14/14

SHEET OF

CREW: RFP, PHH

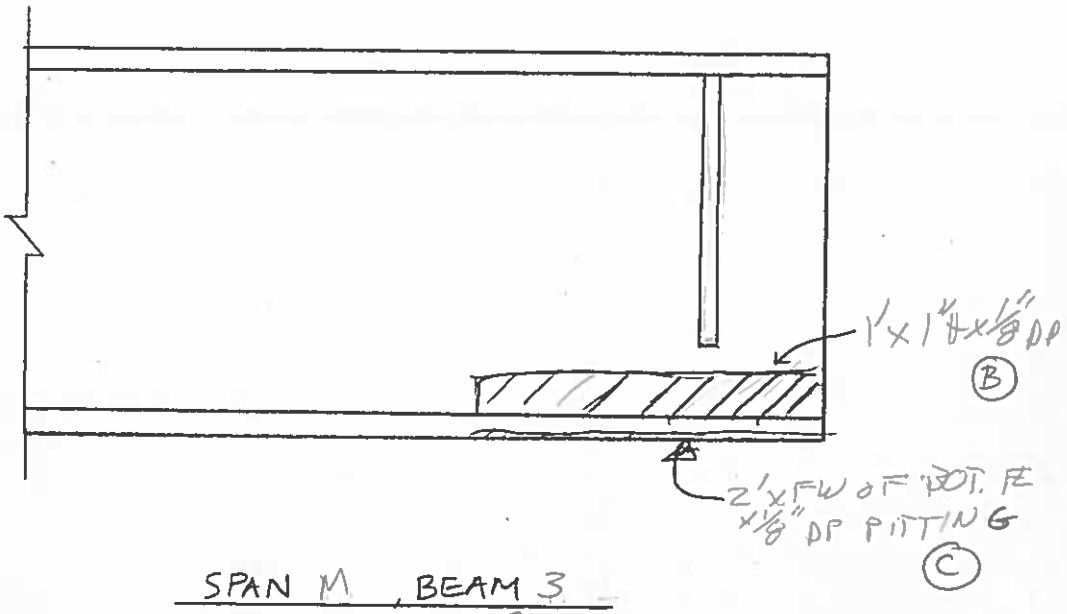

SPAN M, BEAM 3
WEST ELEV. AT P12

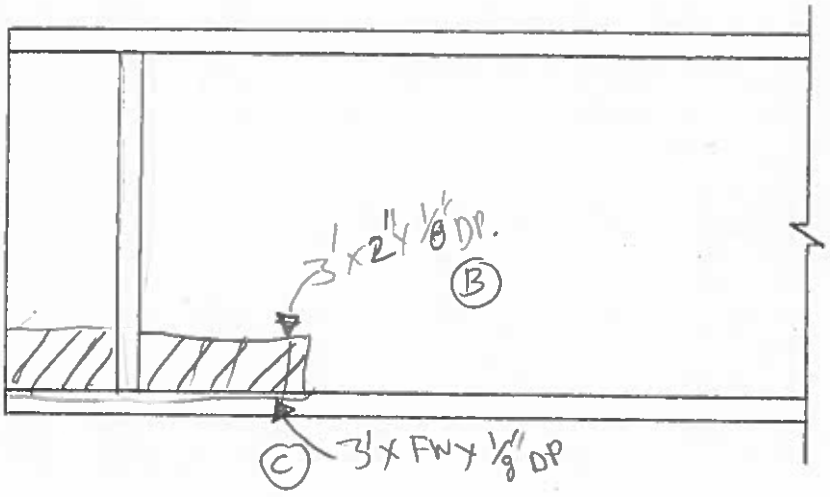

SPAN M, BEAM 3
~~EAST~~ ELEV. AT P12

REVISION	DATE	CREW	COMPANY	REVISION	DATE	CREW	COMPANY
1				3			
2				4			

Dewberry
59 Elm Street, Suite 101
New Haven, CT 06510

FIELD NOTES

JOB NO.

BRIDGE NO: 03014A

DATE: 7/14/14

SHEET OF

CREW: RFP, PHH

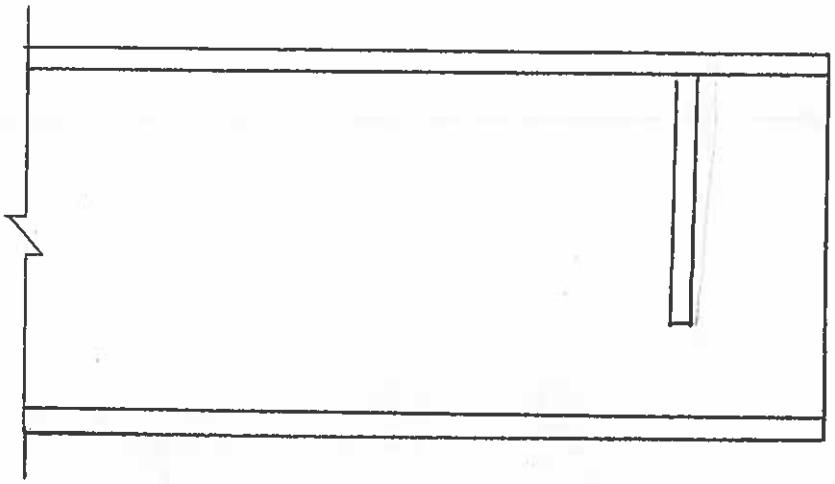

SPAN M, BEAM 4
WEST ELEV. AT P12

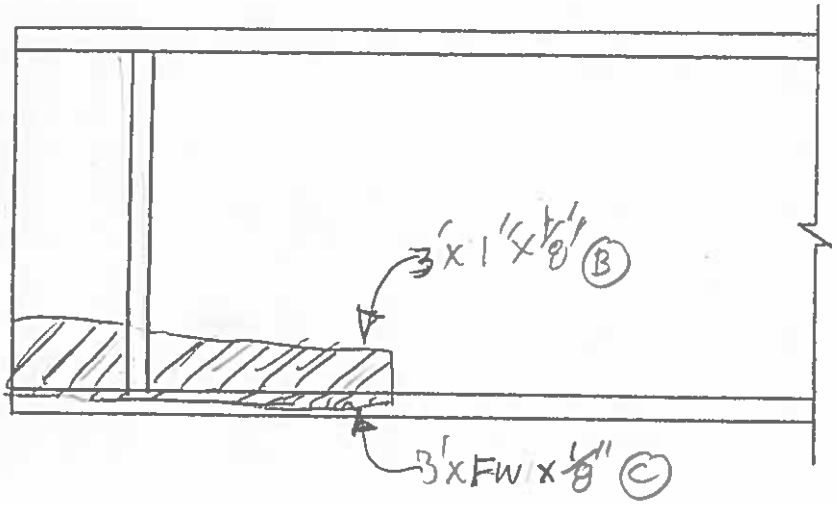

SPAN M, BEAM 4
EAST ELEV. AT P12

REVISION 1	DATE	CREW	COMPANY	REVISION 3	DATE	CREW	COMPANY
REVISION 2	DATE	CREW	COMPANY	REVISION 4	DATE	CREW	COMPANY

Dewberry
59 Elm Street, Suite 101
New Haven, CT 06510

FIELD NOTES

JOB NO.

BRIDGE NO: 03014 A

DATE: 7/14/14

SHEET OF

CREW: RFP, PHH

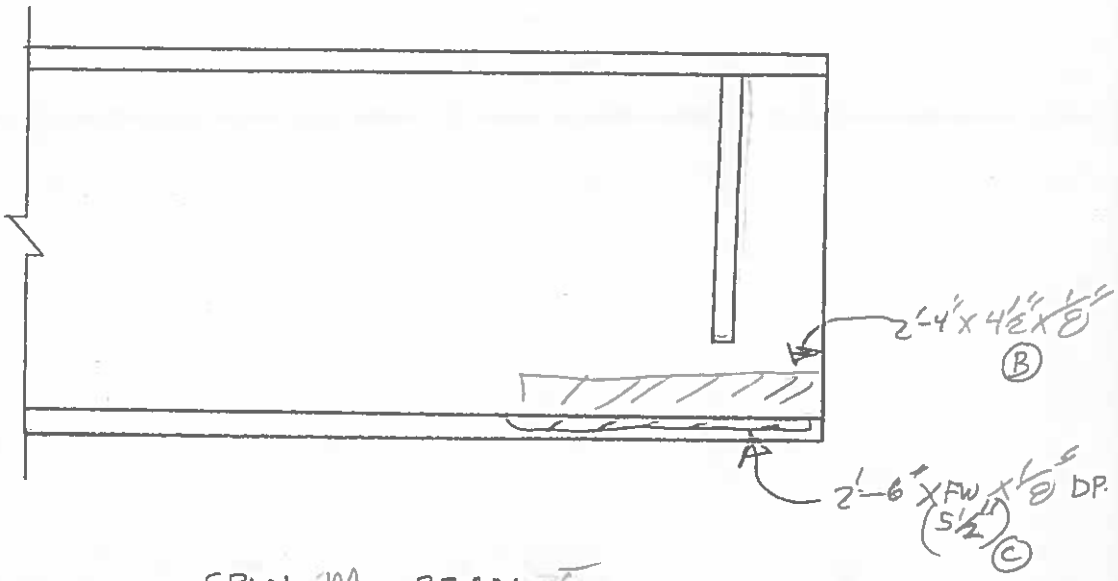

SPAN M, BEAM 5
WEST ELEV. AT P12

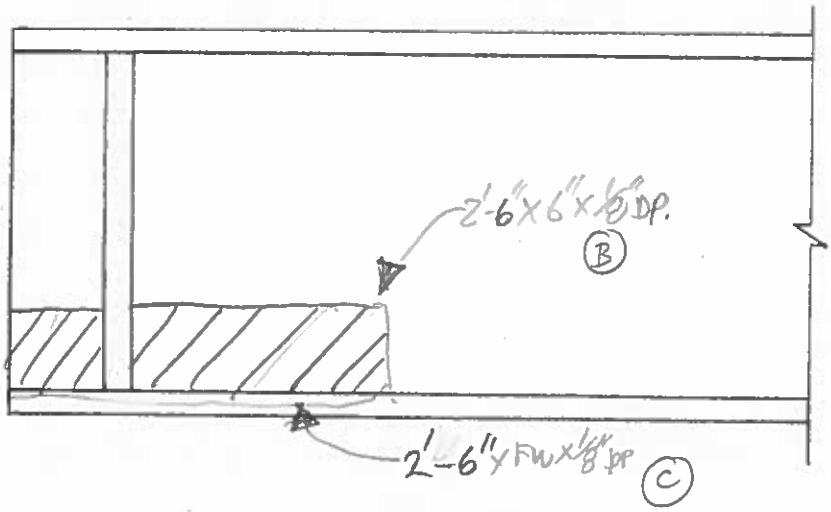

SPAN M, BEAM 5
EAST ELEV. AT P12

REVISION	DATE	CREW	COMPANY	REVISION	DATE	CREW	COMPANY
1				3			
2				4			

Dewberry	FIELD NOTES	JOB NO.	BRIDGE NO: 03014 A
59 Elm Street, Suite 101 New Haven, CT 06510		DATE: 7/14/14	SHEET OF
		CREW: RFP, PHH	

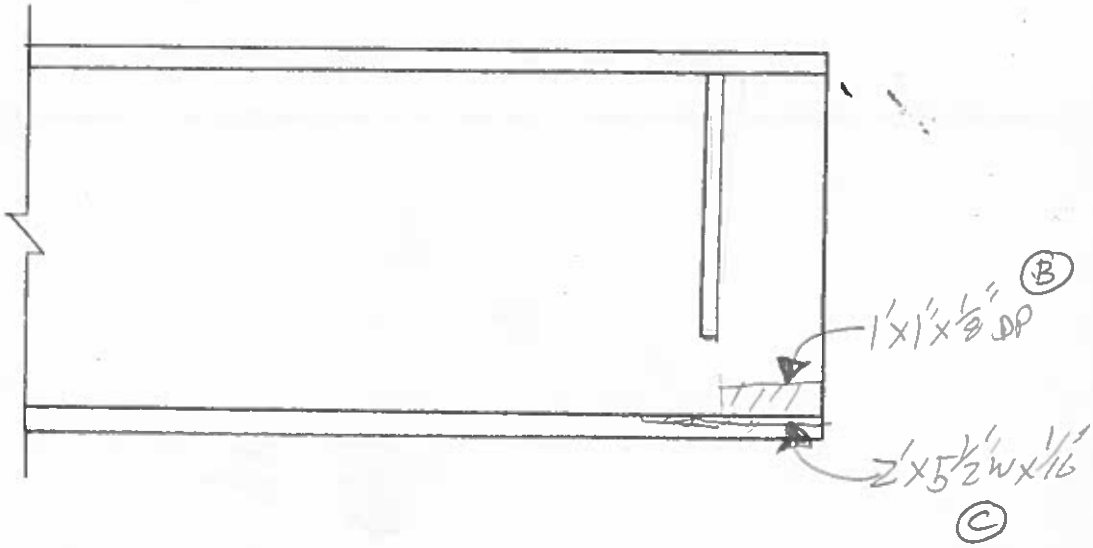

SPAN M, BEAM 6
WEST ELEV. AT P12

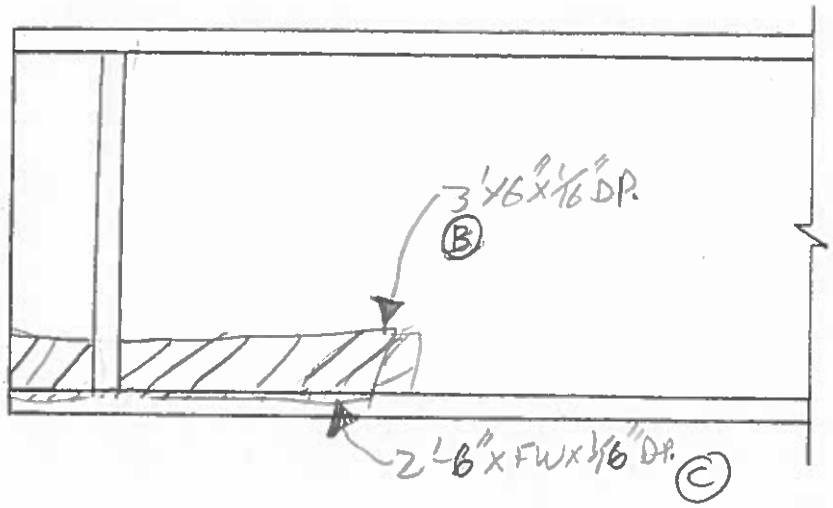

SPAN M, BEAM 6
EAST ELEV. AT P12

REVISION 1	DATE	CREW	COMPANY	REVISION 3	DATE	CREW	COMPANY
REVISION 2	DATE	CREW	COMPANY	REVISION 4	DATE	CREW	COMPANY

Dewberry
59 Elm Street, Suite 101
New Haven, CT 06510

FIELD NOTES

JOB NO.

BRIDGE NO: 03014 A

DATE: 7/14/14

SHEET OF

CREW: RFP, PHH

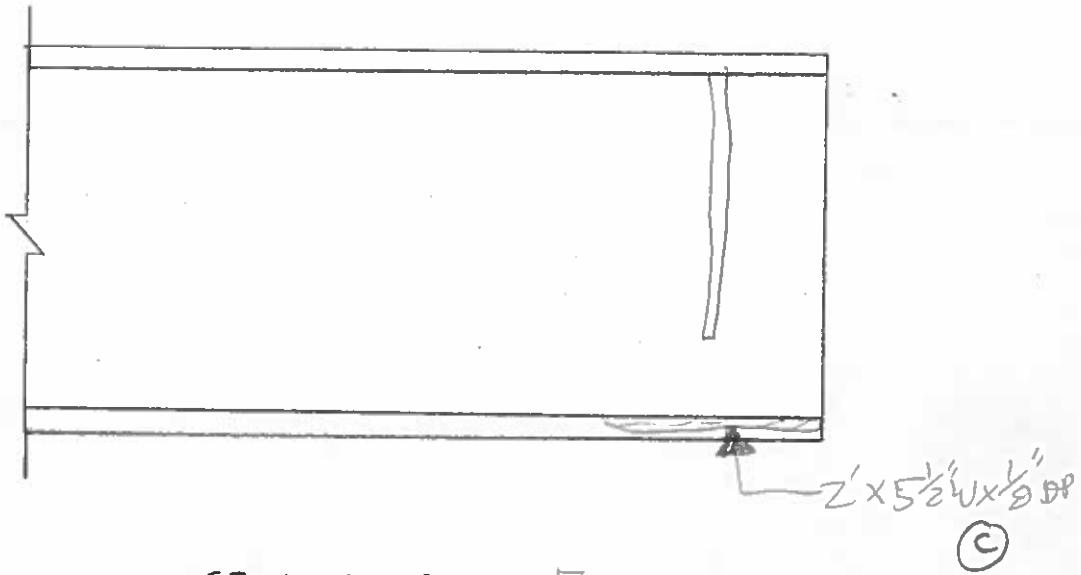

SPAN M, BEAM 7
WEST ELEV. AT P12

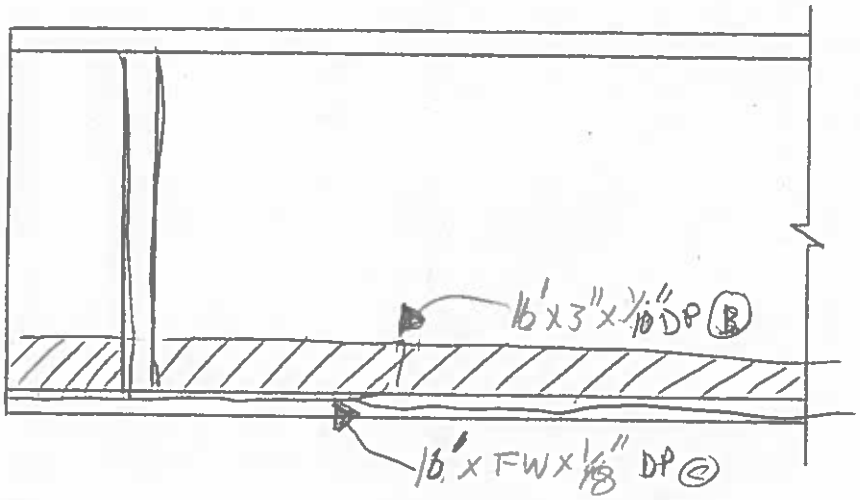

SPAN M, BEAM 7
EAST ELEV. AT P12

REVISION	DATE	CREW	COMPANY	REVISION	DATE	CREW	COMPANY
1				3			
2				4			

Dewberry
59 Elm Street, Suite 101
New Haven, CT 06510

FIELD NOTES

JOB NO.

BRIDGE NO: 03014 A

DATE: 7/14/14

SHEET OF

CREW: RFP, PHH

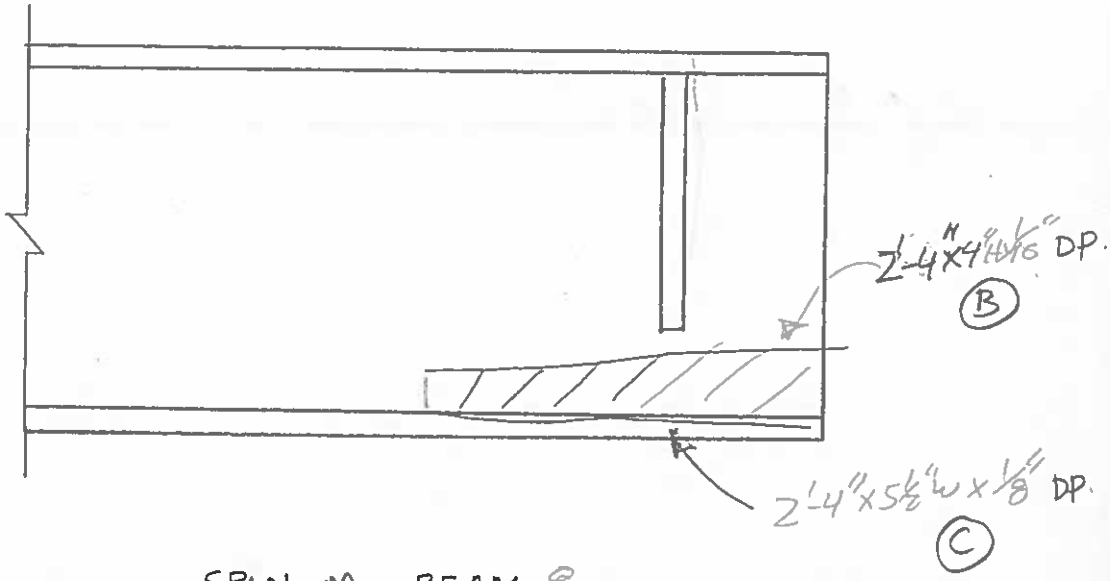

SPAN M, BEAM 8
WEST ELEV. AT P12

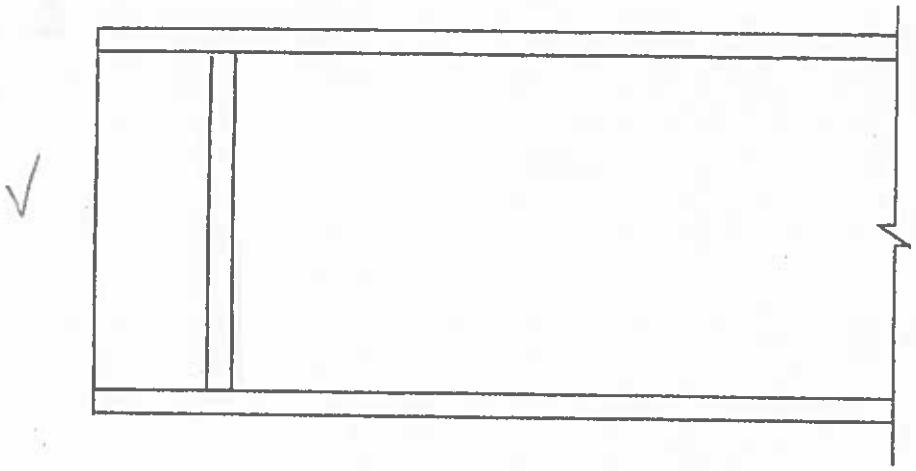

SPAN M, BEAM 8
EAST ELEV. AT P12

REVISION	DATE	CREW	COMPANY	REVISION	DATE	CREW	COMPANY
1				3			
2				4			

Dewberry®	FIELD NOTES	JOB NO.	BRIDGE NO: 03014 A
59 Elm Street, Suite 101 New Haven, CT 06510		DATE: 7/14/14	SHEET OF
		CREW: RFP, PHH	

* TOP OF WEB TIPPED 3/16" WEST

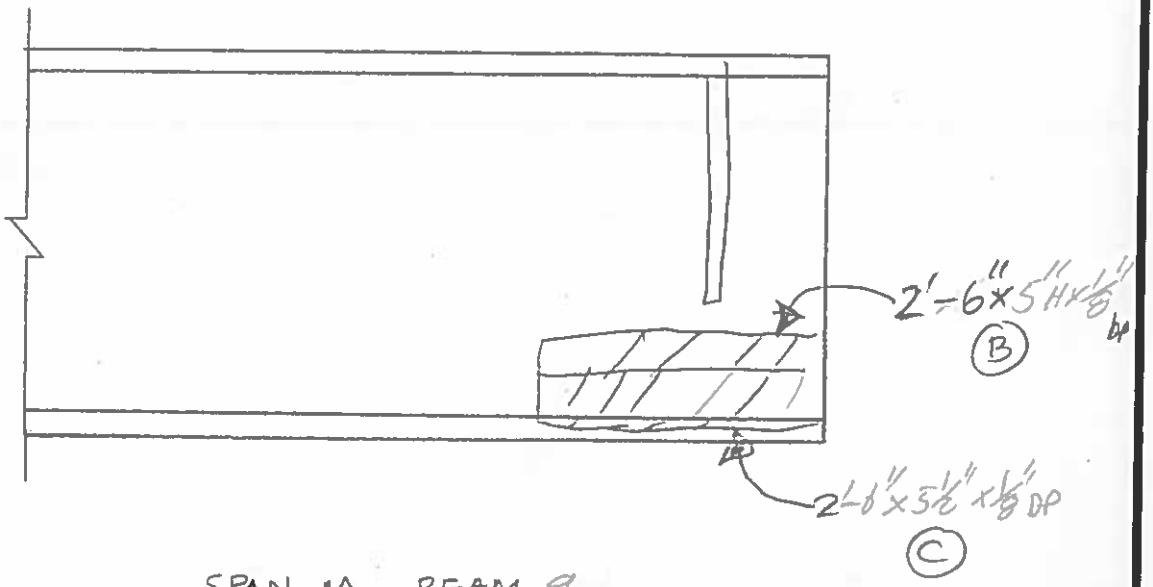

SPAN M, BEAM 9
WEST ELEV. AT P12

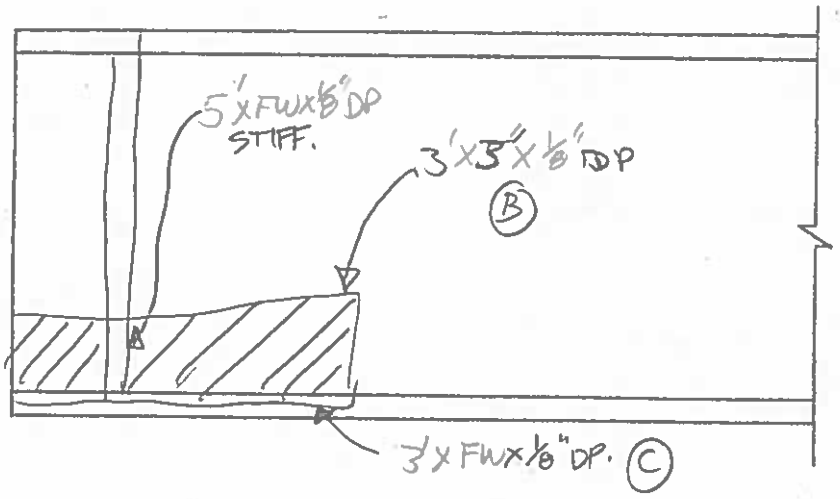

SPAN M, BEAM 9
EAST ELEV. AT P12

REVISION 1	DATE	CREW	COMPANY	REVISION 3	DATE	CREW	COMPANY
REVISION 2	DATE	CREW	COMPANY	REVISION 4	DATE	CREW	COMPANY

Dewberry	FIELD NOTES	JOB NO.	BRIDGE NO: 03014 A
59 Elm Street, Suite 101 New Haven, CT 06510		DATE: 7/14/14	SHEET OF
		CREW: RFP, PHH	

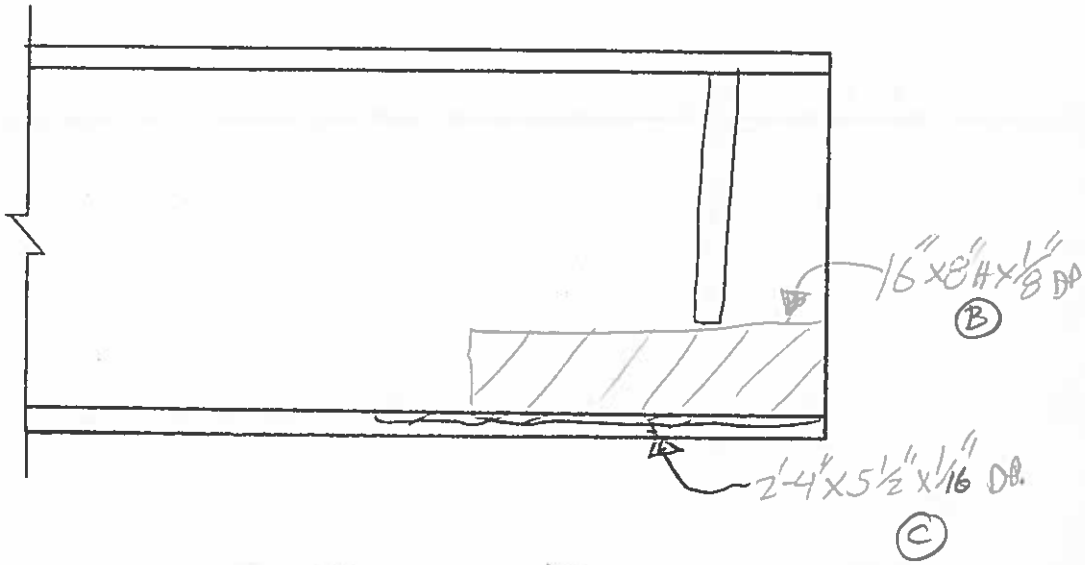

SPAN M, BEAM 10
WEST ELEV. AT P12

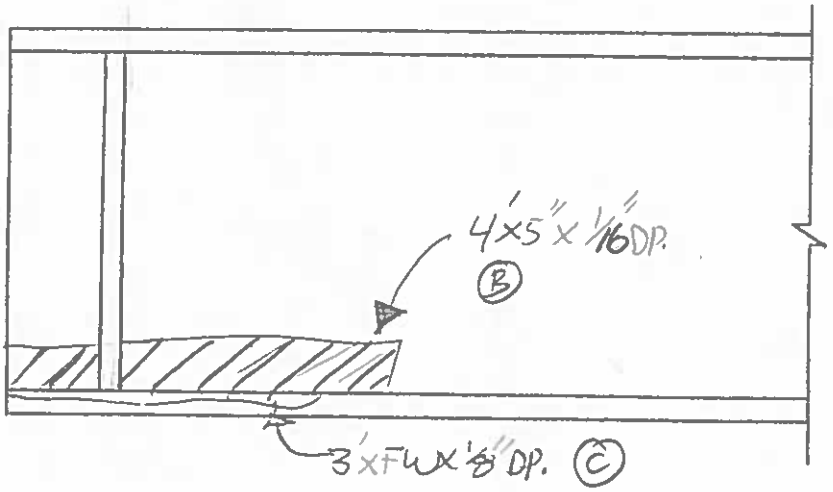

SPAN M, BEAM 10
EAST ELEV. AT P12

REVISION 1	DATE	CREW	COMPANY	REVISION 3	DATE	CREW	COMPANY
REVISION 2	DATE	CREW	COMPANY	REVISION 4	DATE	CREW	COMPANY

Dewberry
59 Elm Street, Suite 101
New Haven, CT 06510

FIELD NOTES	JOB NO.	BRIDGE NO: 03014 A
	DATE: 7/14/14	SHEET OF
	CREW: RFP, PHH	

- WEB BOWED ¼" EAST

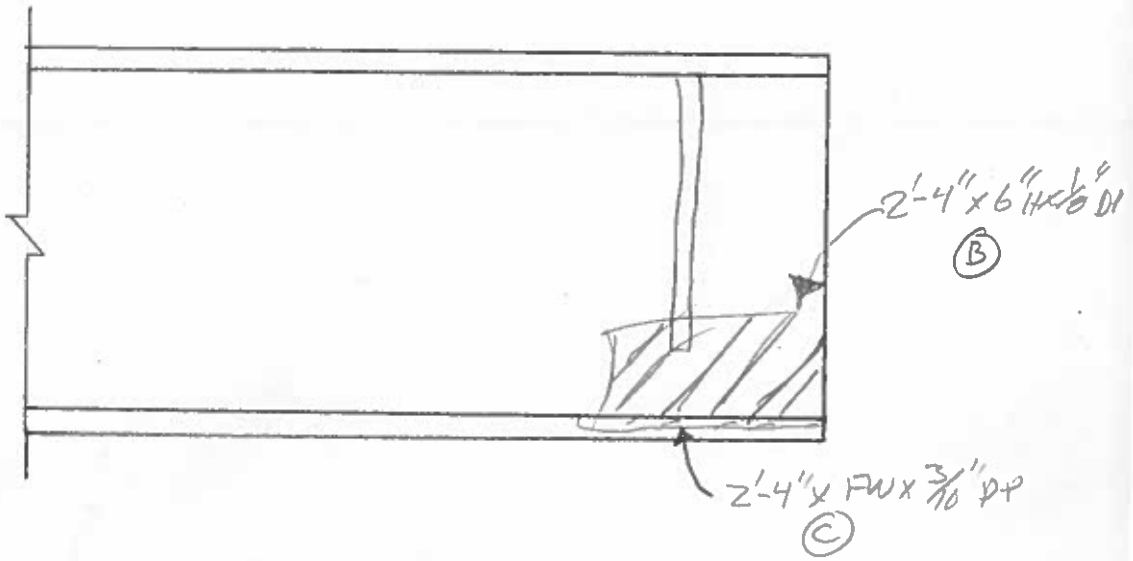

SPAN M, BEAM 11
WEST ELEV. AT P12

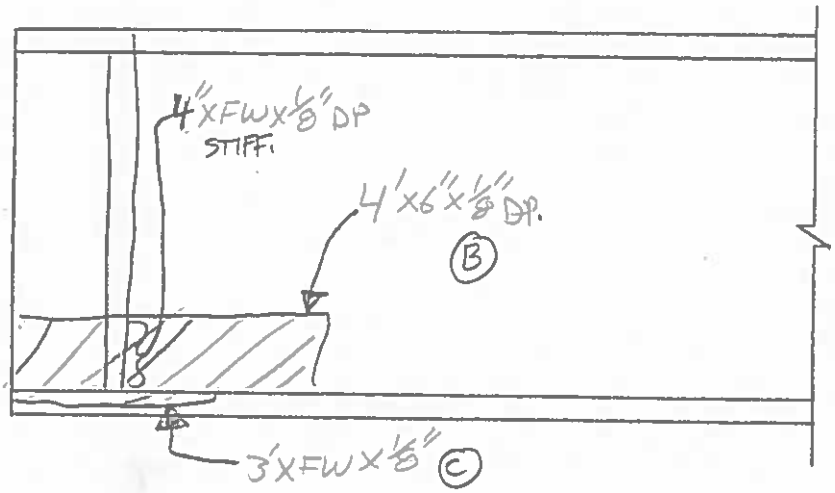

SPAN M, BEAM 11
EAST ELEV. AT P12

REVISION 1	DATE	CREW	COMPANY	REVISION 3	DATE	CREW	COMPANY
REVISION 2	DATE	CREW	COMPANY	REVISION 4	DATE	CREW	COMPANY

Dewberry® 59 Elm Street, Suite 101 New Haven, CT 06510	FIELD NOTES	JOB NO.	BRIDGE NO: 03014 A
		DATE: 7/14/14	SHEET OF
		CREW: RFP, PHH	

• TOP OF WEB TIPPED 3/8" WEST

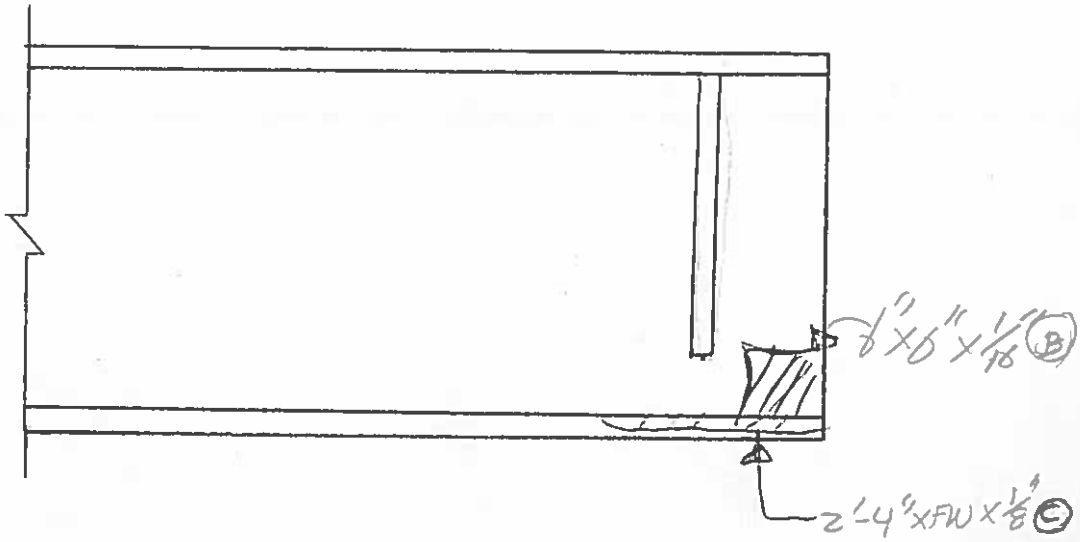

SPAN M, BEAM 12
WEST ELEV. AT P12

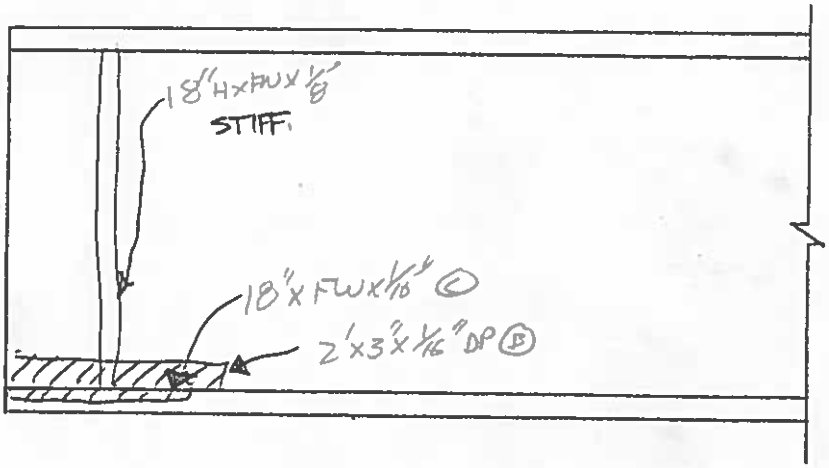

SPAN M, BEAM 12
EAST ELEV. AT P12

REVISION 1	DATE	CREW	COMPANY	REVISION 3	DATE	CREW	COMPANY
REVISION 2	DATE	CREW	COMPANY	REVISION 4	DATE	CREW	COMPANY

Dewberry
59 Elm Street, Suite 101
New Haven, CT 06510

FIELD NOTES

JOB NO.

BRIDGE NO: 03014 A

DATE: 7/14/14

SHEET OF

CREW: RFP, PHH

- WEB BOWED 1/4" WEST

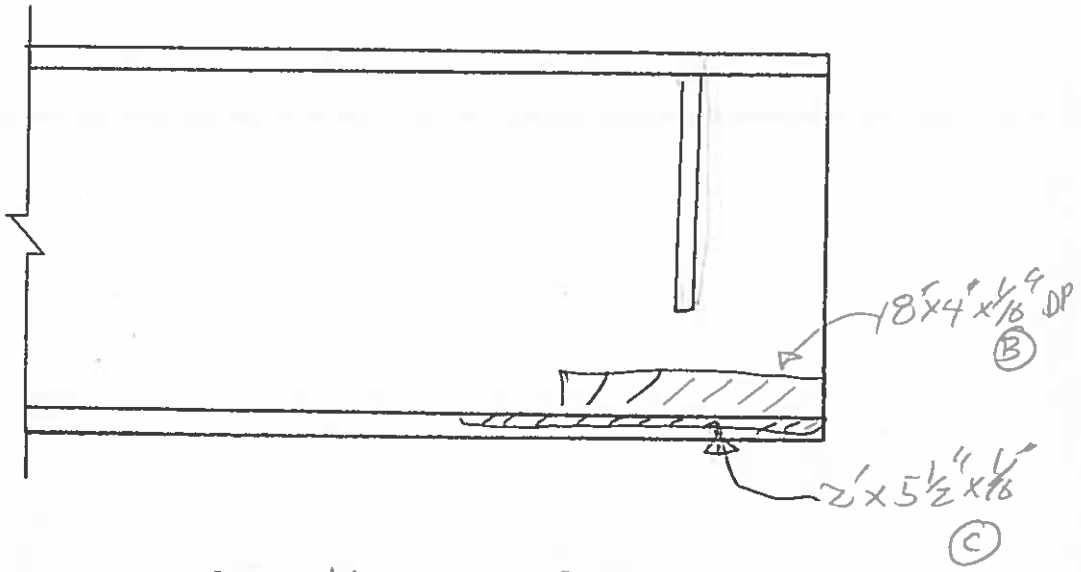

SPAN M, BEAM 13
WEST ELEV. AT P12

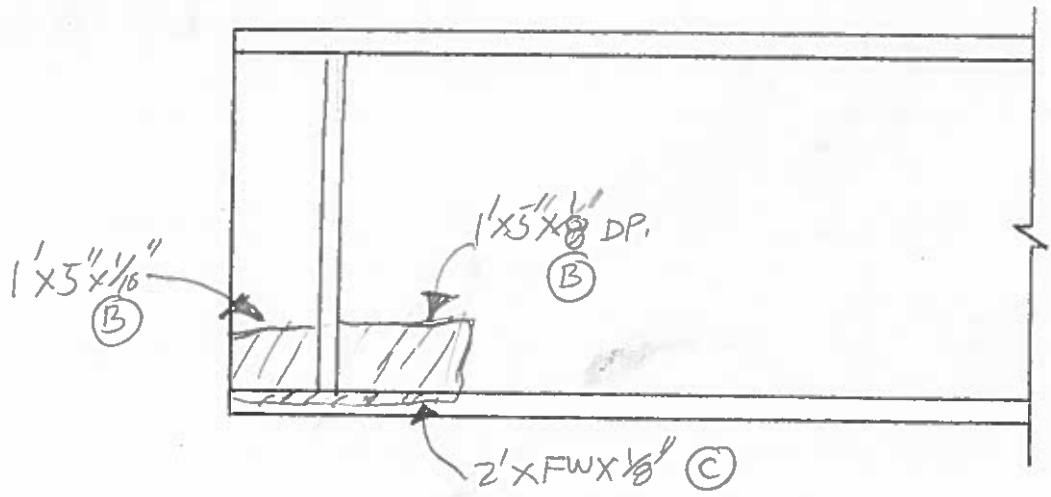

SPAN M, BEAM 13
EAST ELEV. AT P12

REVISION	DATE	CREW	COMPANY	REVISION	DATE	CREW	COMPANY
1				3			
2				4			

Dewberry
59 Elm Street, Suite 101
New Haven, CT 06510

FIELD NOTES

JOB NO.

BRIDGE NO: 03014 A

DATE: 9/14/14

SHEET OF

CREW: RFP, PHH

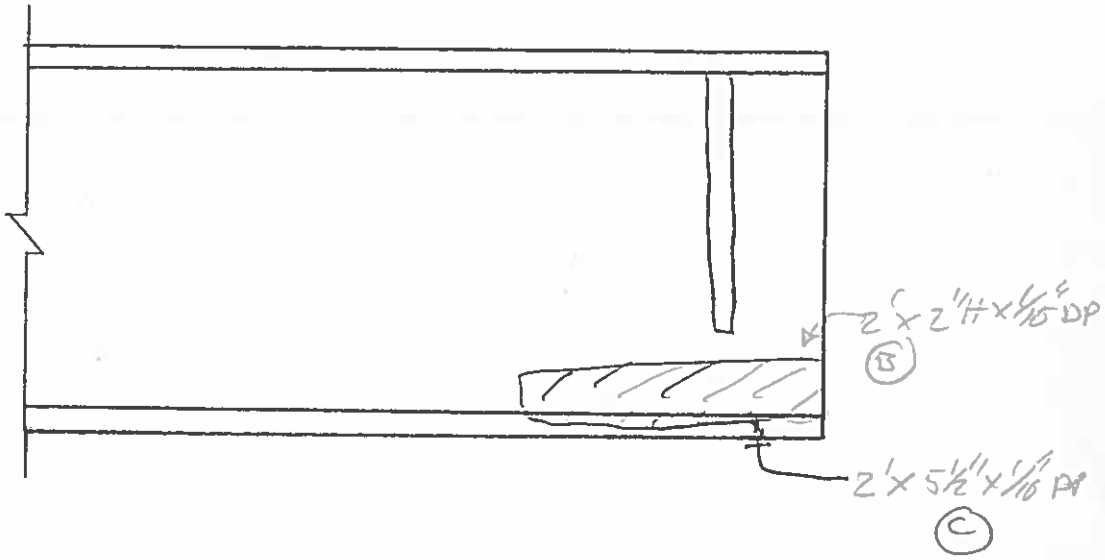

SPAN M, BEAM 14
WEST ELEV. AT P12

- WEB BOWED 1/4"

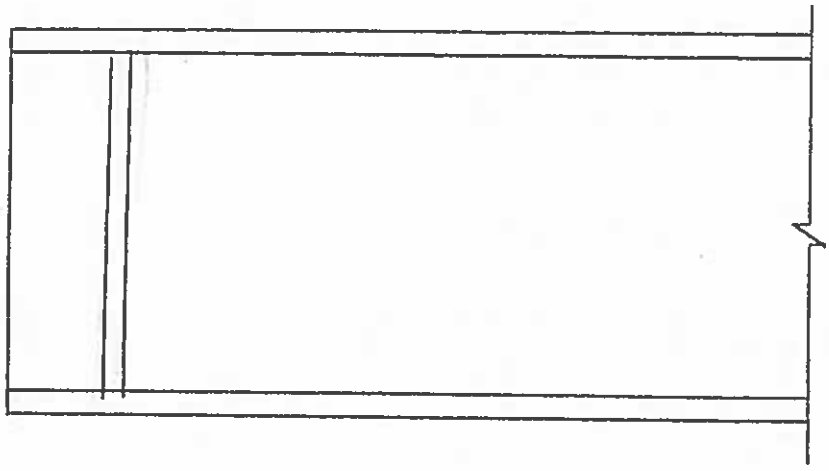

SPAN M, BEAM 14
EAST ELEV. AT P12

REVISION	DATE	CREW	COMPANY	REVISION	DATE	CREW	COMPANY
1				3			
2				4			

Dewberry
59 Elm Street, Suite 101
New Haven, CT 06510

FIELD NOTES

JOB NO.

BRIDGE NO: 03014A

DATE: 7/14/14

SHEET OF

CREW: RFP, PHH

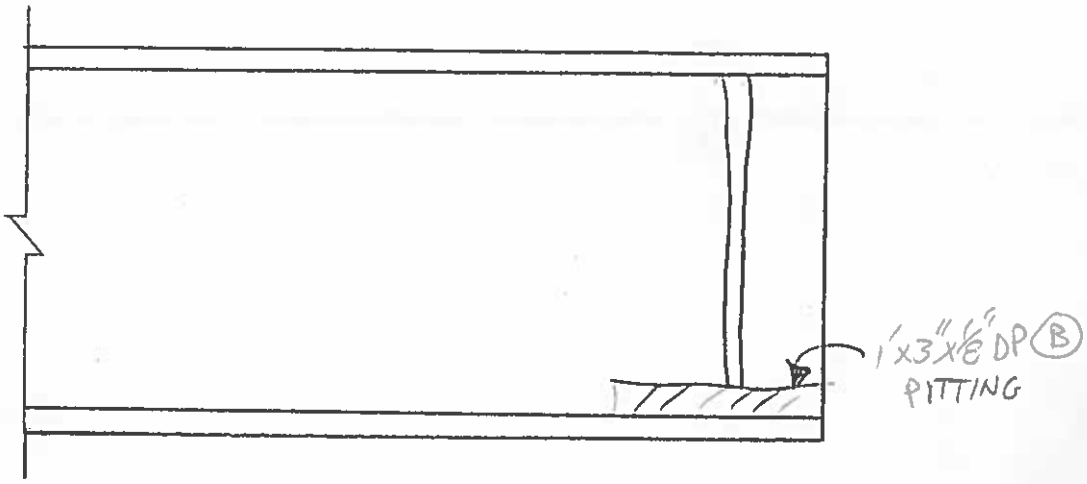

SPAN M, BEAM 15
WEST ELEV. AT P12

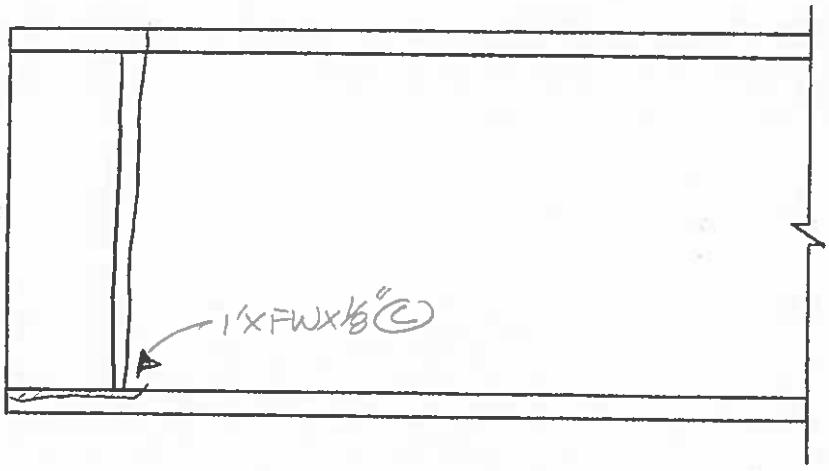

SPAN M, BEAM 15
EAST ELEV. AT P12

REVISION	DATE	CREW	COMPANY	REVISION	DATE	CREW	COMPANY
1				3			
2				4			

Dewberry® 59 Elm Street, Suite 101 New Haven, CT 06510	FIELD NOTES	JOB NO.	BRIDGE NO: 03014 A
		DATE: 7/14/14	SHEET OF
		CREW: RFP, PHH	

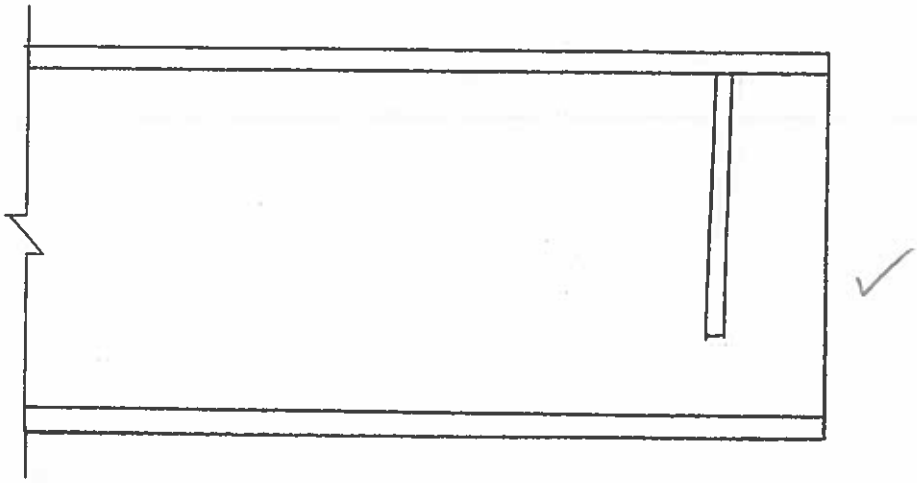

SPAN M, BEAM 16
WEST ELEV. AT P12

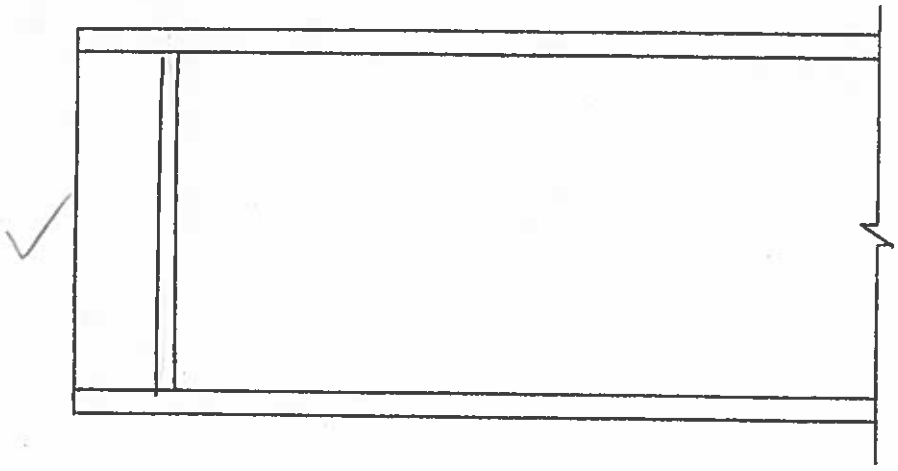

SPAN M, BEAM 16
EAST ELEV. AT P12

REVISION 1	DATE	CREW	COMPANY	REVISION 3	DATE	CREW	COMPANY
REVISION 2	DATE	CREW	COMPANY	REVISION 4	DATE	CREW	COMPANY

Dewberry
59 Elm Street, Suite 101
New Haven, CT 06510

FIELD NOTES

JOB NO.

BRIDGE NO: 03014A

DATE: 7/14/14

SHEET OF

CREW: RFP, PHH

- WEB BOWED ¼"

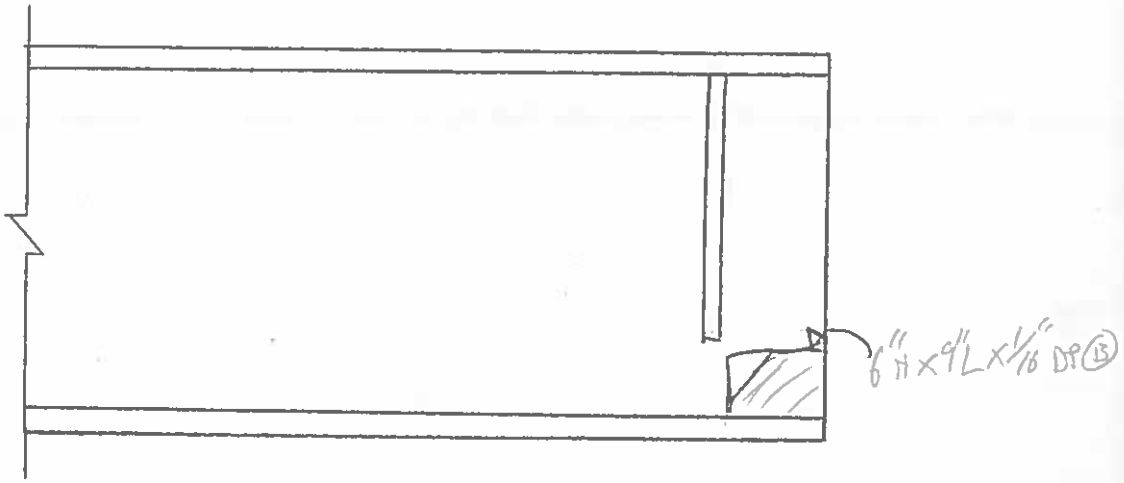

SPAN M, BEAM 17
WEST ELEV. AT P12

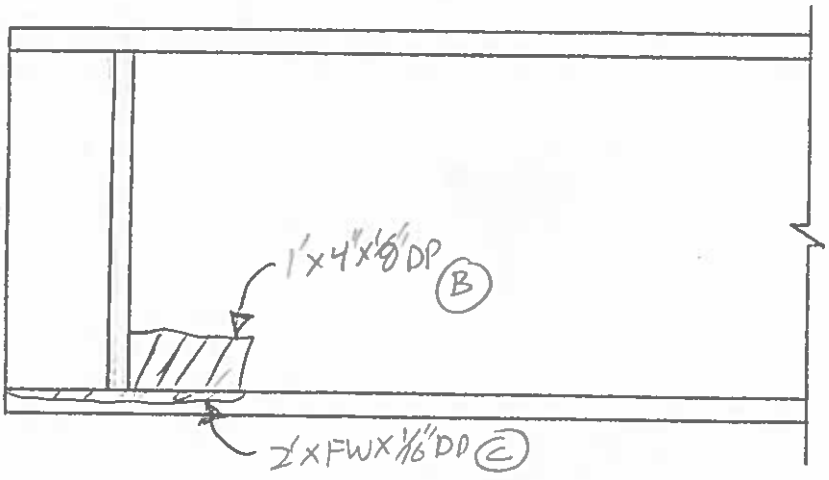

SPAN M, BEAM 17
EAST ELEV. AT P12

REVISION	DATE	CREW	COMPANY	REVISION	DATE	CREW	COMPANY
1				3			
2				4			

Dewberry
59 Elm Street, Suite 101
New Haven, CT 06510

FIELD NOTES

JOB NO.

BRIDGE NO: 03014 A

DATE: 7/14/14

SHEET OF

CREW: RFP, PHI

- WEB BOWED 7/16" EAST

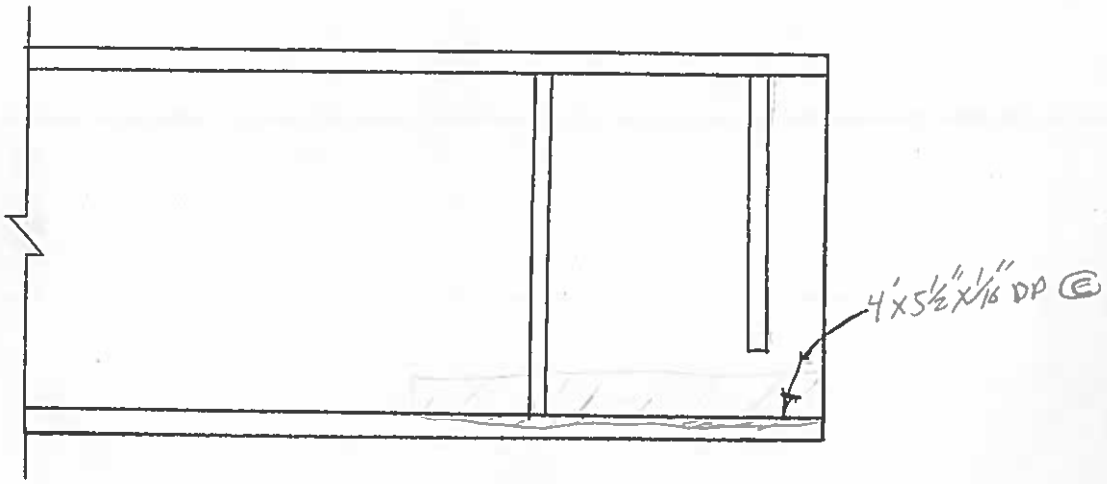

SPAN M, BEAM 18
WEST ELEV. AT P12

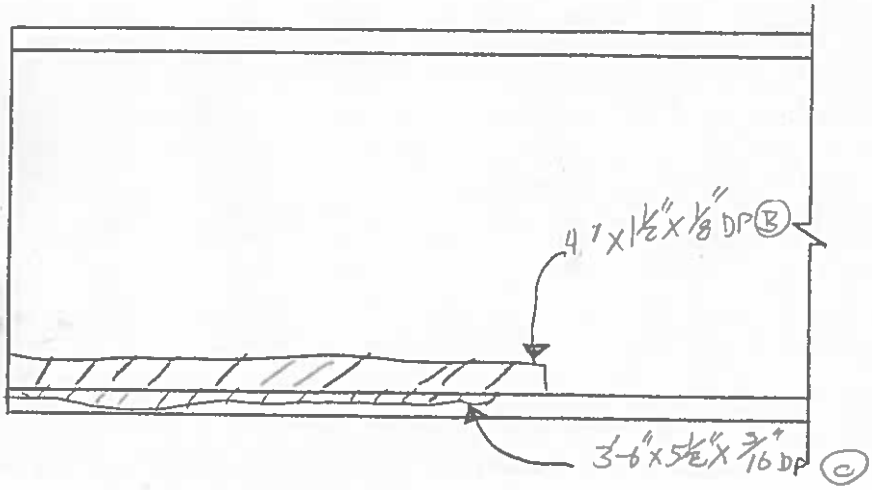

SPAN M, BEAM 18
EAST ELEV. AT P12

REVISION	DATE	CREW	COMPANY	REVISION	DATE	CREW	COMPANY
1				3			
2				4			

Dewberry
59 Elm Street, Suite 101
New Haven, CT 06510

FIELD NOTES

JOB NO.

BRIDGE NO: 03014 A

DATE: 9/14/14

SHEET OF

CREW: RFP, PHH

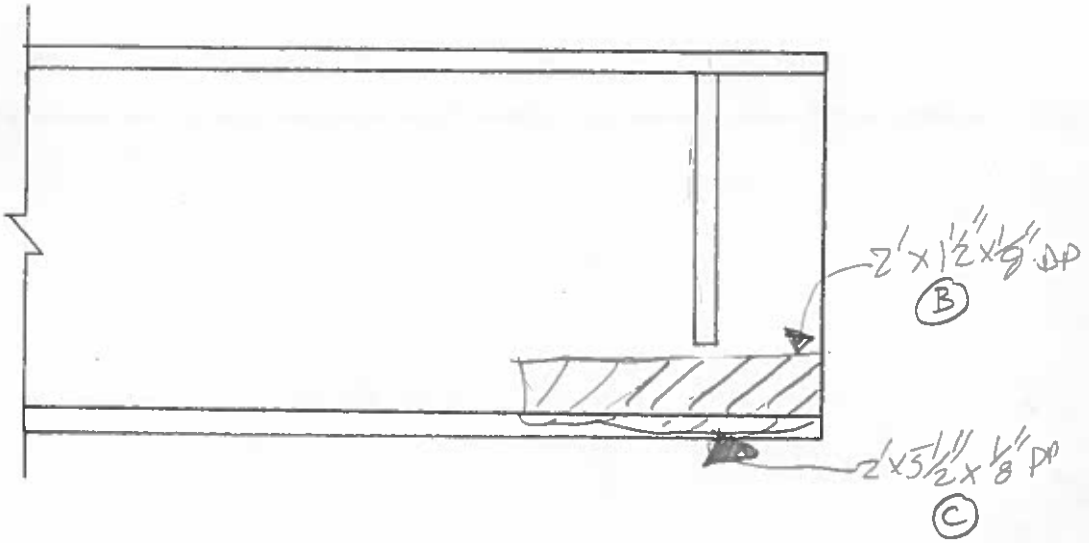

SPAN M, BEAM 1
EAST ELEV. AT P13

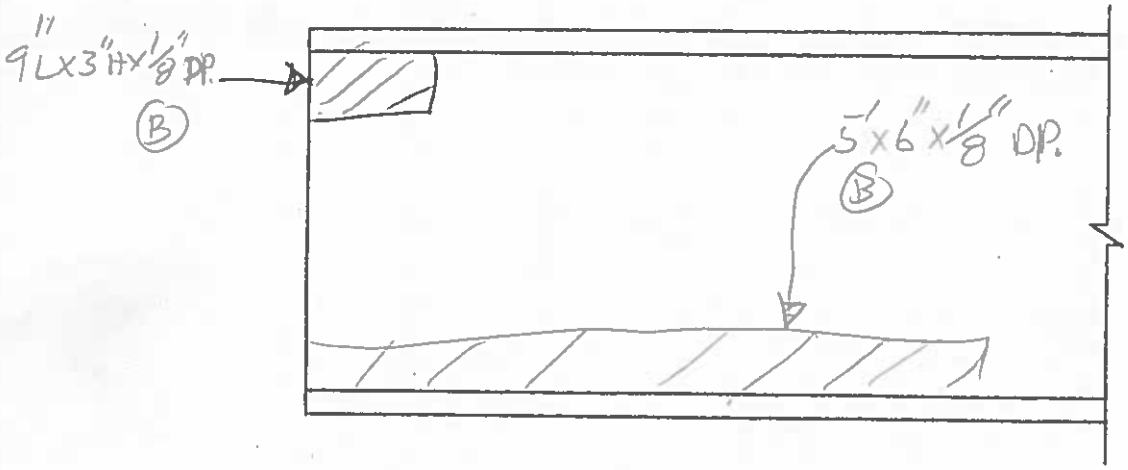

SPAN M, BEAM 1
WEST ELEV. AT P13

REVISION	DATE	CREW	COMPANY	REVISION	DATE	CREW	COMPANY
1				3			
2				4			

Dewberry
59 Elm Street, Suite 101
New Haven, CT 06510

FIELD NOTES	JOB NO.	BRIDGE NO: 03014 A
	DATE: 7/14/14	SHEET OF
	CREW: RFP, PHH	

- TOP WEB TIPPED EAST 3/16"

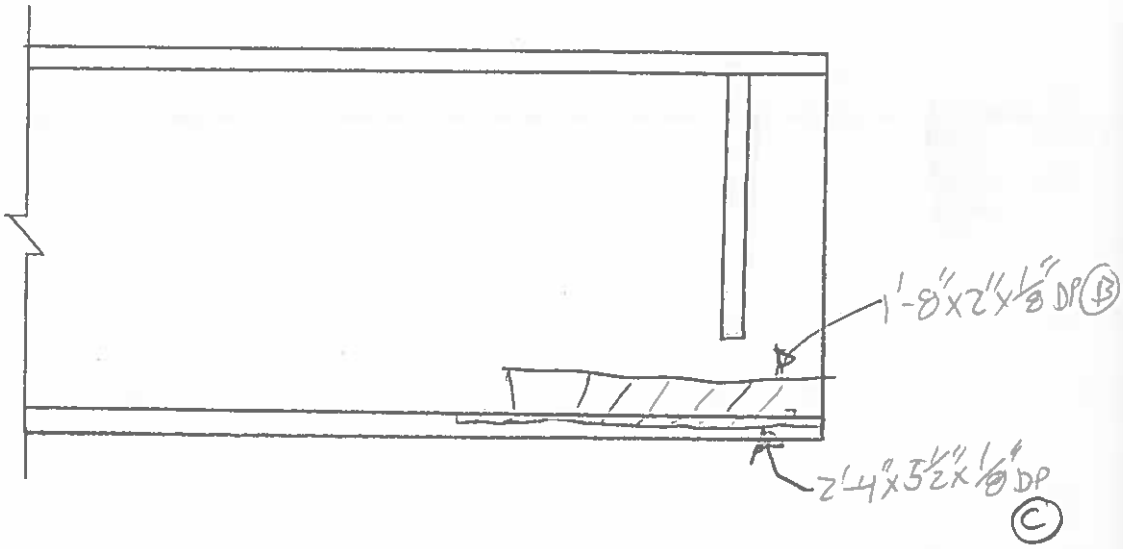

SPAN M, BEAM 2
EAST ELEV. AT P13

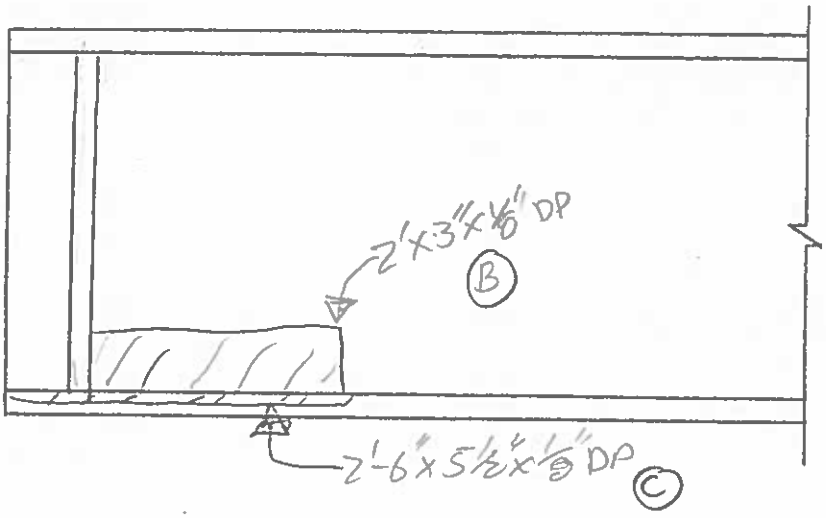

SPAN M, BEAM 2
WEST ELEV. AT P13

REVISION 1	DATE	CREW	COMPANY	REVISION 3	DATE	CREW	COMPANY
REVISION 2	DATE	CREW	COMPANY	REVISION 4	DATE	CREW	COMPANY

Dewberry

59 Elm Street, Suite 101
New Haven, CT 06510

FIELD NOTES

JOB NO.

BRIDGE NO: 03014A

DATE: 7/14/14

SHEET OF

CREW: RFP, PHH

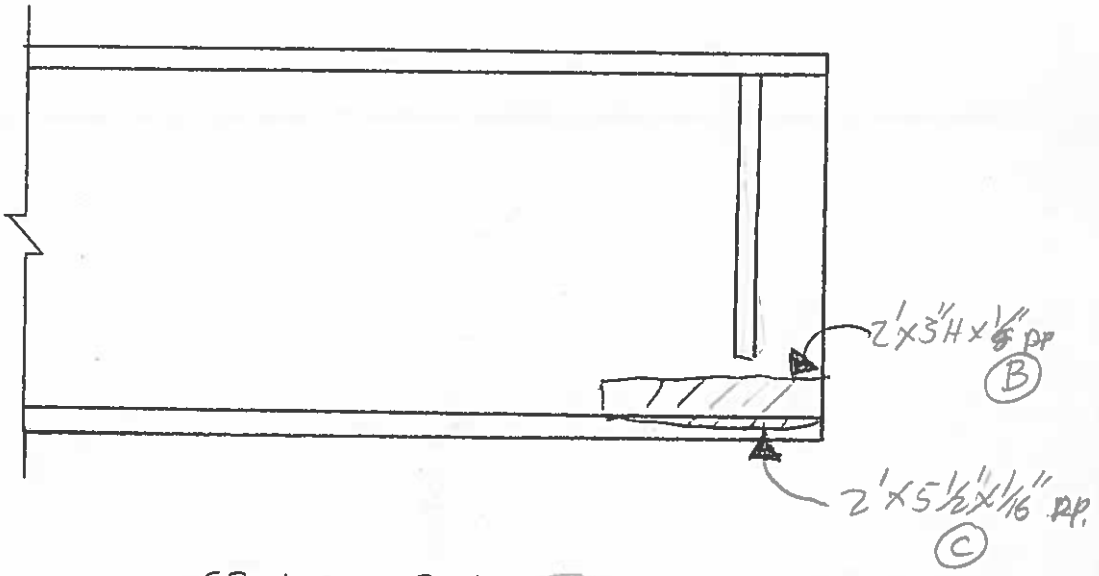

SPAN M, BEAM 3
EAST ELEV. AT P13

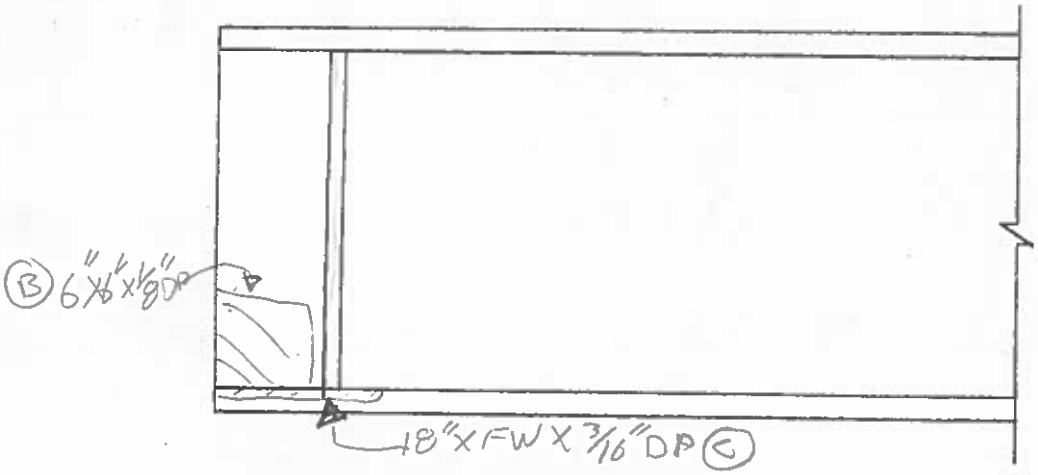

SPAN M, BEAM 3
WEST ELEV. AT P13

REVISION	DATE	CREW	COMPANY	REVISION	DATE	CREW	COMPANY
1				3			
2				4			

Dewberry
59 Elm Street, Suite 101
New Haven, CT 06510

FIELD NOTES

JOB NO.

BRIDGE NO: 03014 A

DATE: 7/14/14

SHEET OF

CREW: RFP, PHN

• TIPPED WEST 1/4"

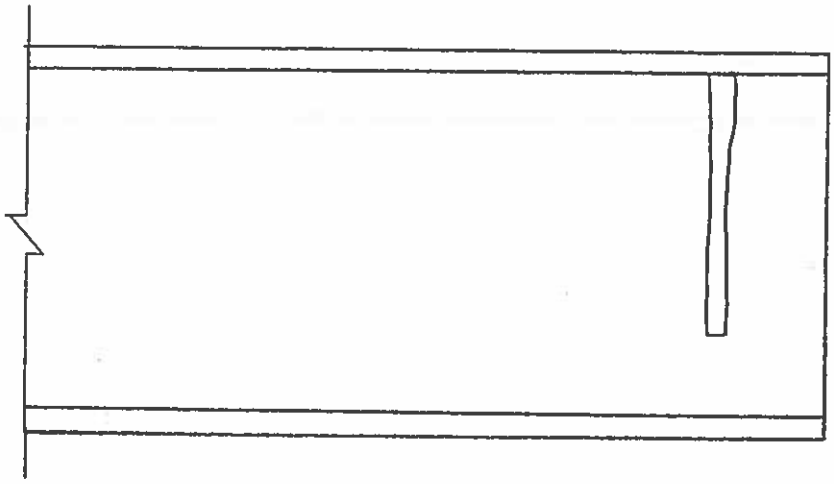

SPAN M, BEAM 4
EAST ELEV. AT P13

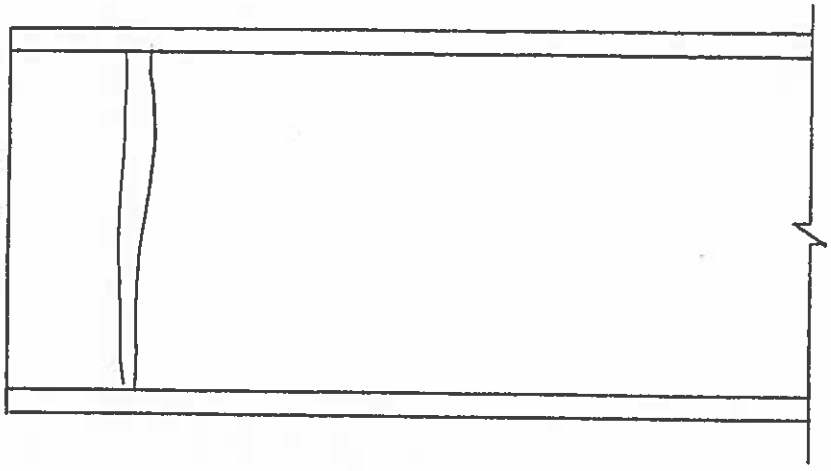

SPAN M, BEAM 4
WEST ELEV. AT P13

REVISION	DATE	CREW	COMPANY	REVISION	DATE	CREW	COMPANY
1				3			
2				4			

Dewberry
59 Elm Street, Suite 101
New Haven, CT 06510

FIELD NOTES

JOB NO.

BRIDGE NO: 03014A

DATE: 7/14/14

SHEET OF

CREW: RFP, PHH

- TOP OF WEB TIPPED 3/16" WEST
- NO SECTION LOSS

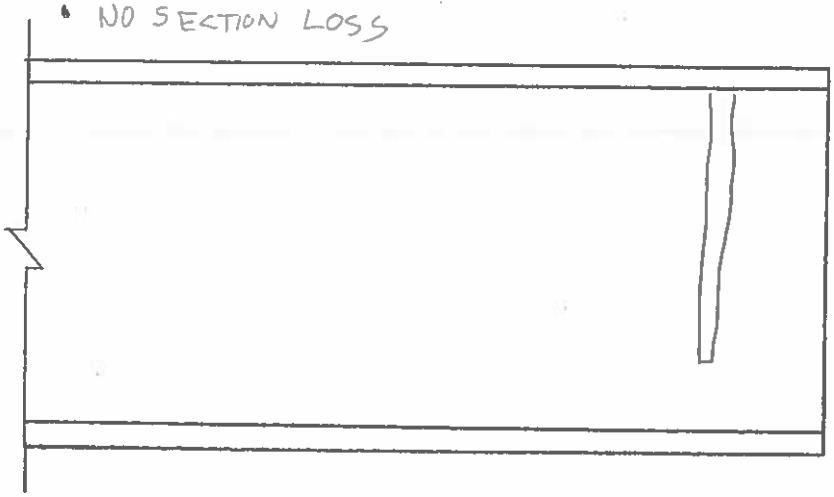

SPAN M, BEAM 5
EAST ELEV. AT P13

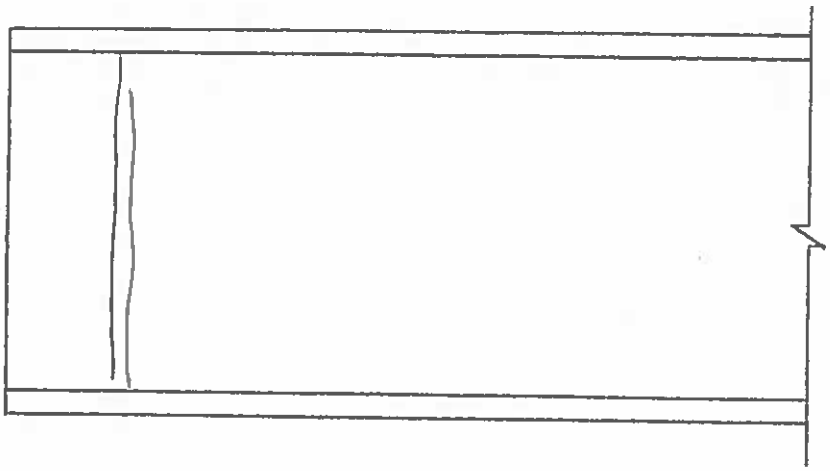

SPAN M, BEAM 5
WEST ELEV. AT P13

REVISION	DATE	CREW	COMPANY	REVISION	DATE	CREW	COMPANY
1				3			
2				4			

Dewberry® 59 Elm Street, Suite 101 New Haven, CT 06510	FIELD NOTES	JOB NO.	BRIDGE NO: 03014A
		DATE: 7/14/14	SHEET OF
		CREW: RFP, PHH	

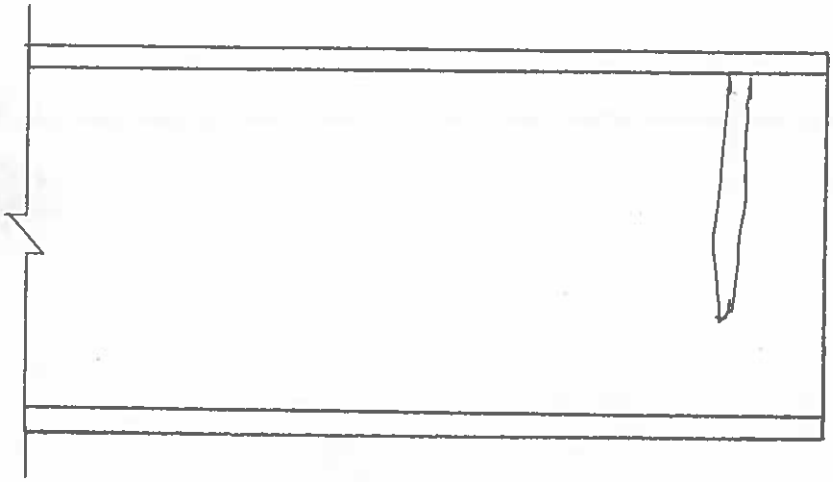

SPAN M, BEAM 6
EAST ELEV. AT P13

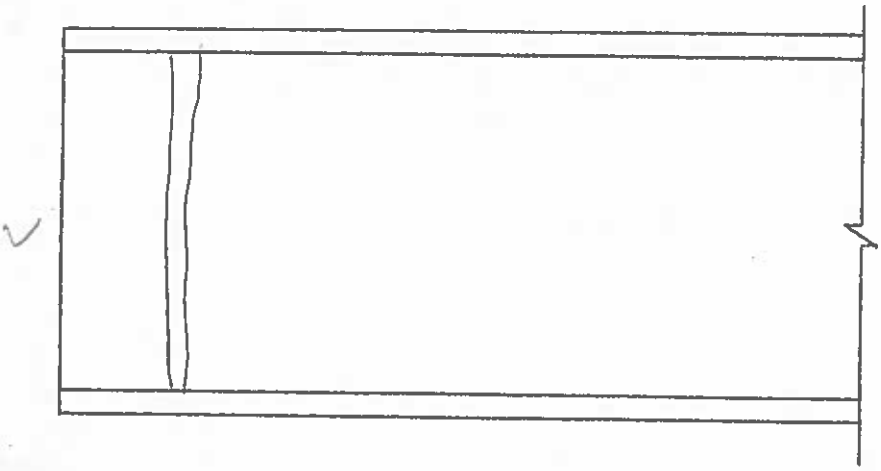

SPAN M, BEAM 6
WEST ELEV. AT P3

REVISION 1	DATE	CREW	COMPANY	REVISION 3	DATE	CREW	COMPANY
REVISION 2	DATE	CREW	COMPANY	REVISION 4	DATE	CREW	COMPANY

Dewberry
59 Elm Street, Suite 101
New Haven, CT 06510

FIELD NOTES

JOB NO.

BRIDGE NO: 03014 A

DATE: 7/14/14

SHEET OF

CREW: RFP, PHH

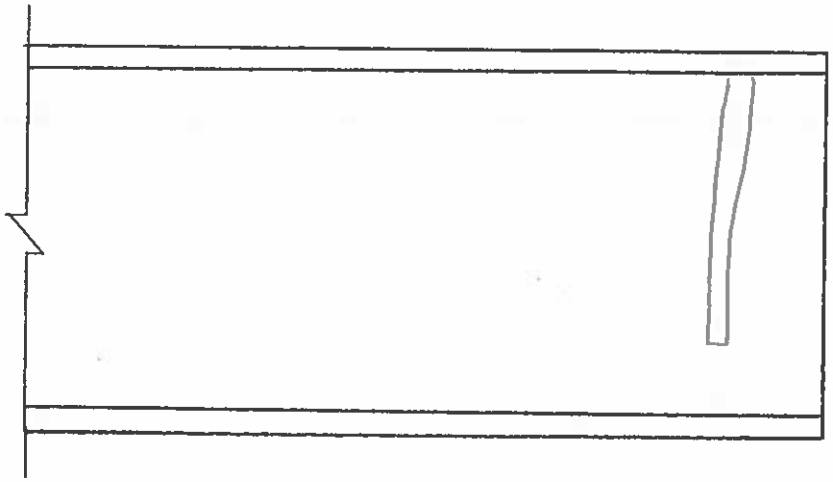

SPAN M, BEAM 7
EAST ELEV. AT P13

• 1/4" BOWED EAST

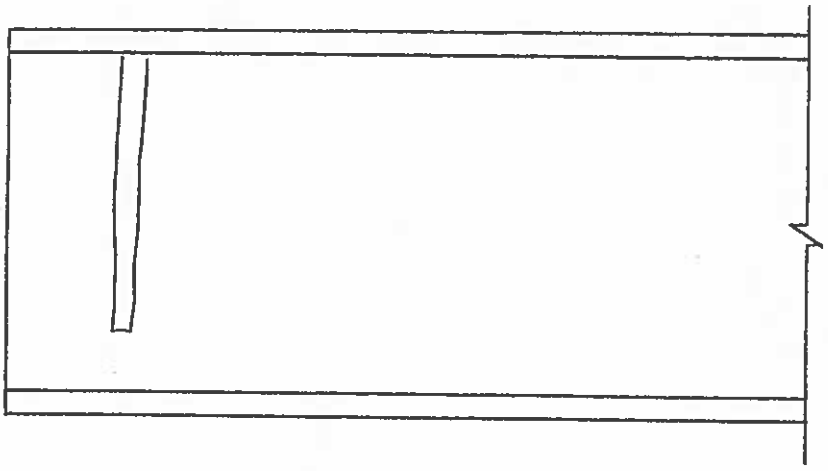

SPAN M, BEAM 7
WEST ELEV. AT P13

REVISION	DATE	CREW	COMPANY	REVISION	DATE	CREW	COMPANY
1				3			
2				4			

Dewberry
59 Elm Street, Suite 101
New Haven, CT 06510

FIELD NOTES

JOB NO.

BRIDGE NO: 03014 A

DATE: 9/14/14

SHEET OF

CREW: RFP, PHH

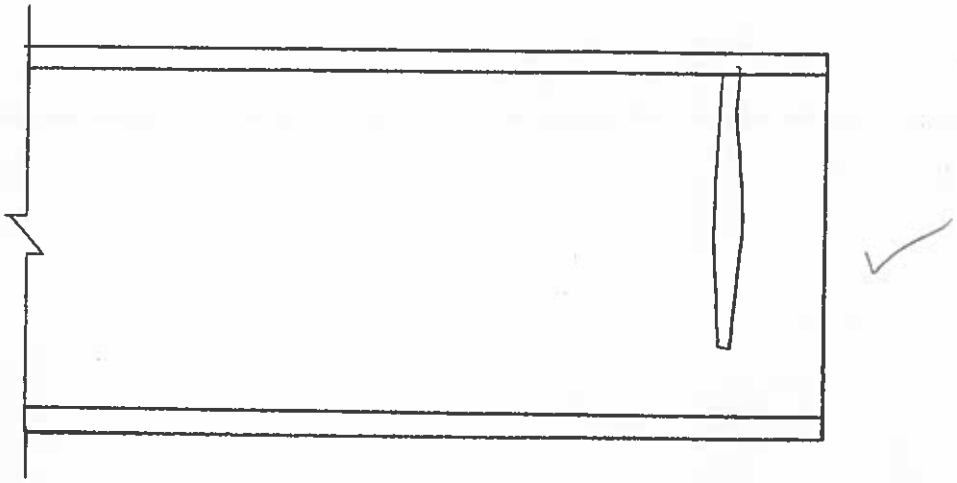

SPAN M, BEAM 8
EAST ELEV. AT P13

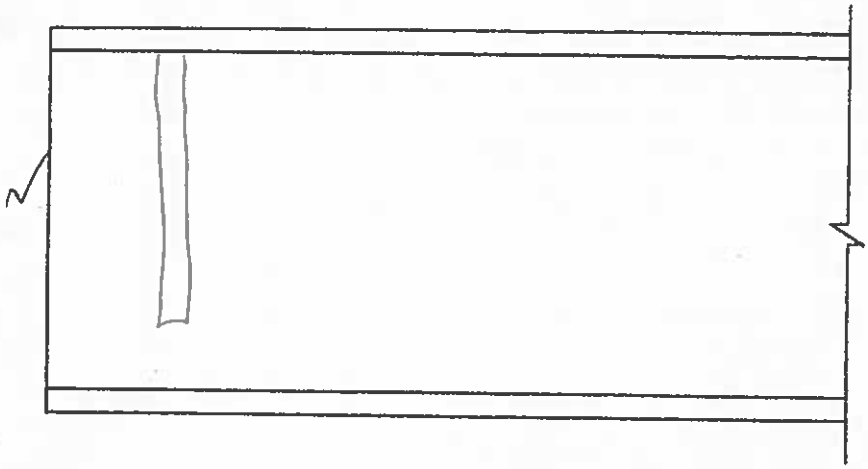

SPAN M, BEAM 8
WEST ELEV. AT P13

REVISION	DATE	CREW	COMPANY	REVISION	DATE	CREW	COMPANY
1				3			
2				4			

Dewberry®	FIELD NOTES	JOB NO.	BRIDGE NO: 03014 A
59 Elm Street, Suite 101 New Haven, CT 06510		DATE: 7/14/14	SHEET OF
		CREW: RFP, BHH	

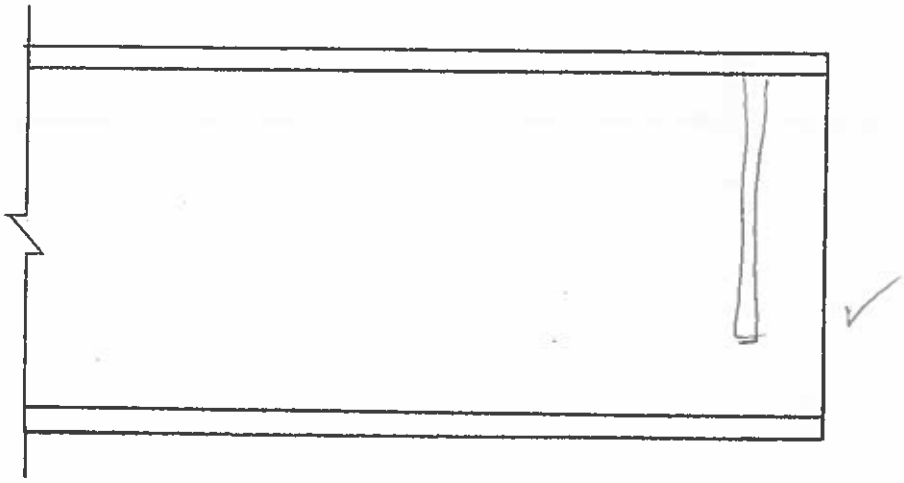

SPAN M, BEAM 9
EAST ELEV. AT P13

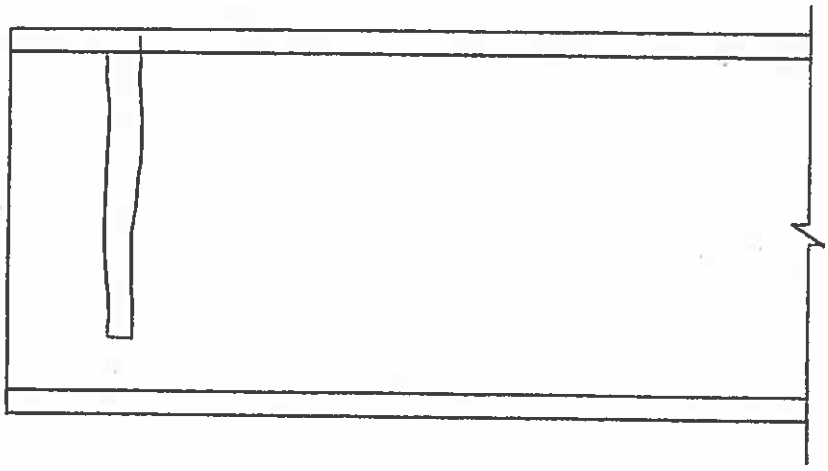

SPAN M, BEAM 9
WEST ELEV. AT P13

REVISION 1	DATE	CREW	COMPANY	REVISION 3	DATE	CREW	COMPANY
REVISION 2	DATE	CREW	COMPANY	REVISION 4	DATE	CREW	COMPANY

Dewberry
59 Elm Street, Suite 101
New Haven, CT 06510

FIELD NOTES

JOB NO.

BRIDGE NO: 03014 A

DATE: 7/14/14

SHEET OF

CREW: RFP, PHH

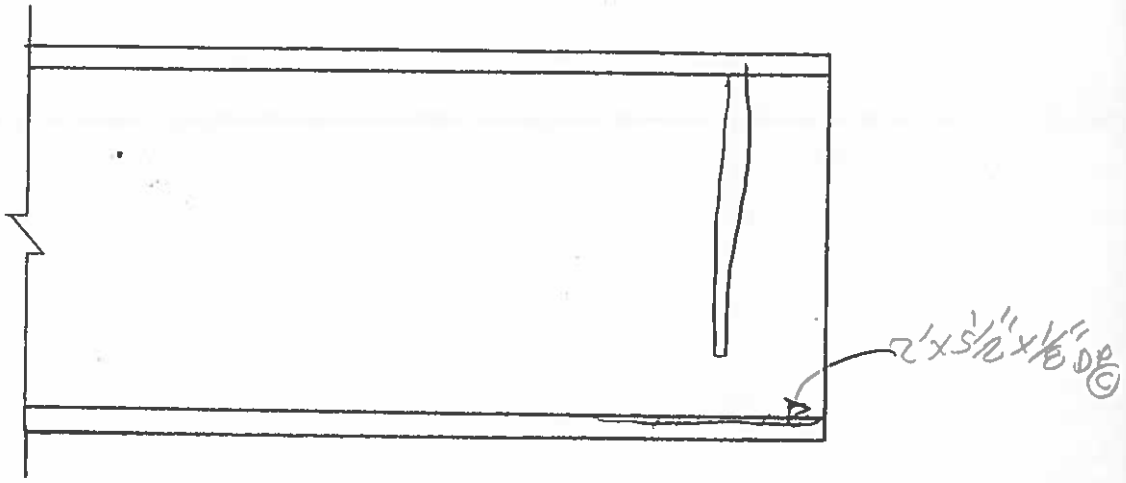

SPAN M, BEAM 10
EAST ELEV. AT P13

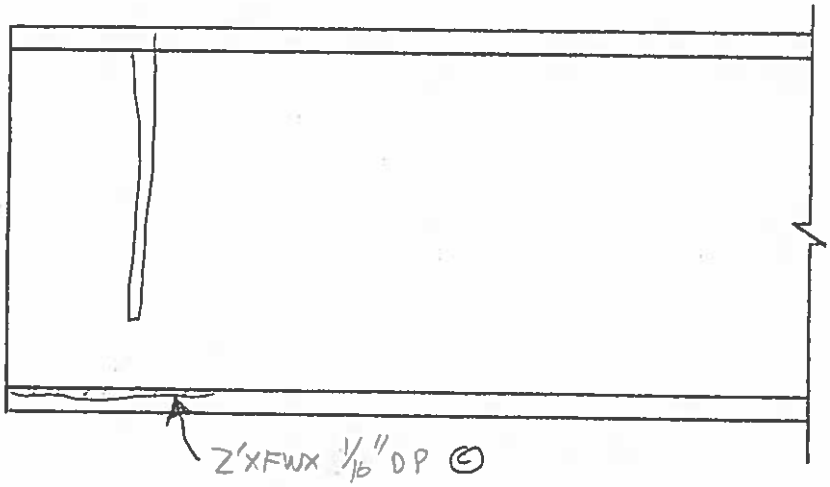

SPAN M, BEAM 10
WEST ELEV. AT P13

REVISION	DATE	CREW	COMPANY	REVISION	DATE	CREW	COMPANY
1				3			
2				4			

Dewberry
59 Elm Street, Suite 101
New Haven, CT 06510

FIELD NOTES

JOB NO.

BRIDGE NO: 03014A

DATE: 7/14/14

SHEET OF

CREW: RFP, PHH

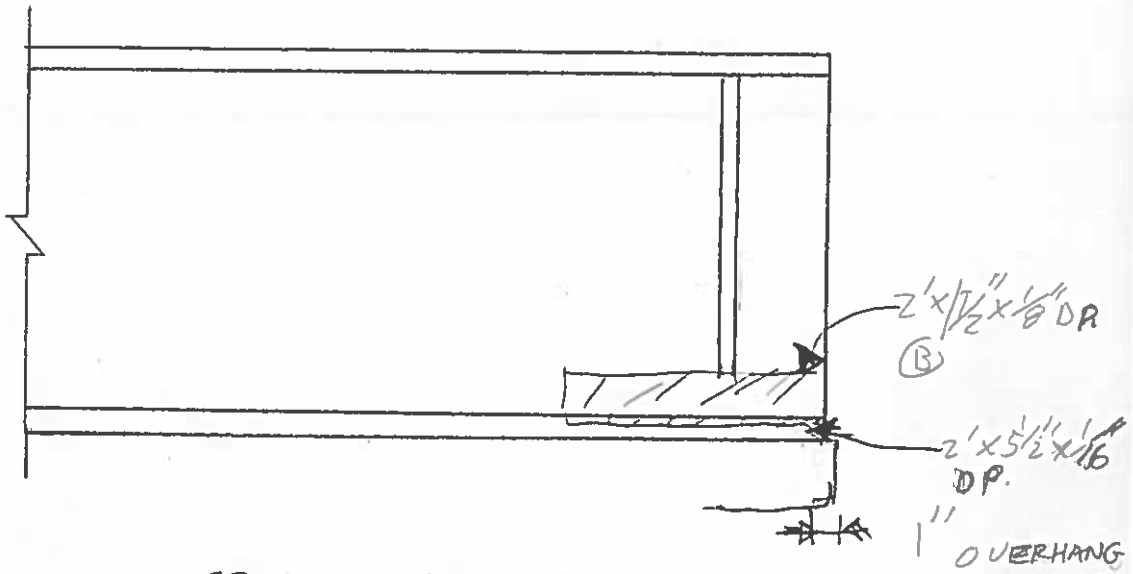

SPAN M, BEAM 11
WEST ELEV. AT P13

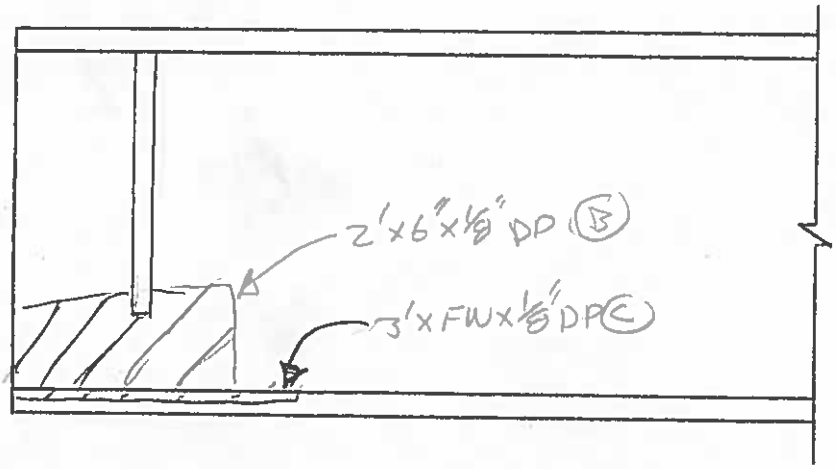

SPAN M, BEAM 11
WEST ELEV. AT P13

REVISION	DATE	CREW	COMPANY	REVISION	DATE	CREW	COMPANY
1				3			
2				4			

Dewberry
59 Elm Street, Suite 101
New Haven, CT 06510

FIELD NOTES

JOB NO.

BRIDGE NO: 03014A

DATE: 7/14/14

SHEET OF

CREW: RFP, PHH

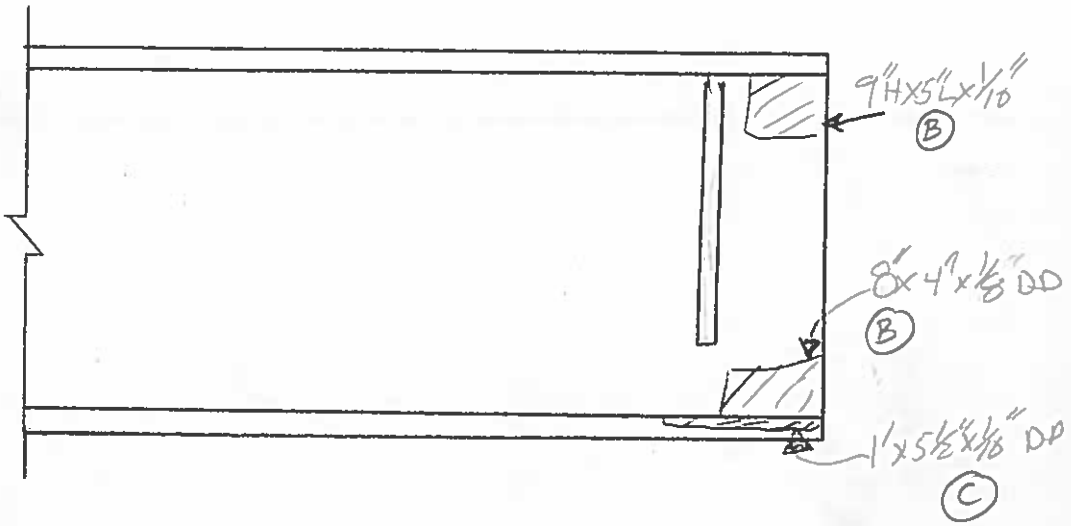

SPAN M, BEAM 12
EAST ELEV. AT P13

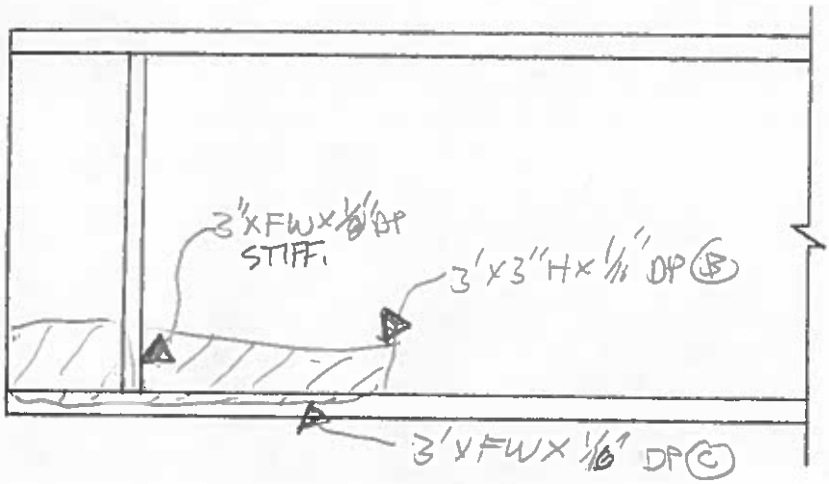

SPAN M, BEAM 12
WEST ELEV. AT P13

REVISION	DATE	CREW	COMPANY	REVISION	DATE	CREW	COMPANY
1				3			
2				4			

Dewberry	FIELD NOTES	JOB NO.	BRIDGE NO: 03014 A
59 Elm Street, Suite 101 New Haven, CT 06510		DATE: 7/14/14	SHEET OF
		CREW: RFP, PHH	

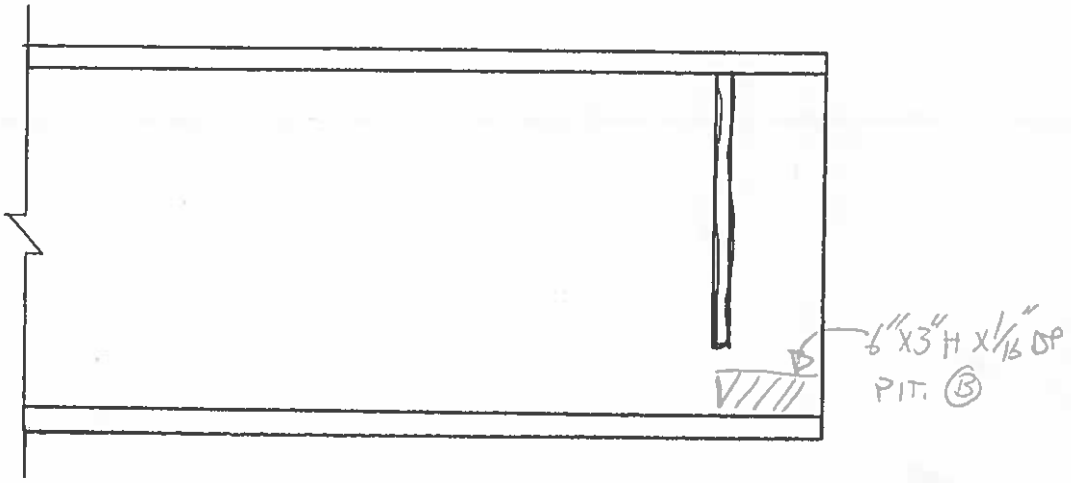

SPAN M, BEAM 13
EAST ELEV. AT P13

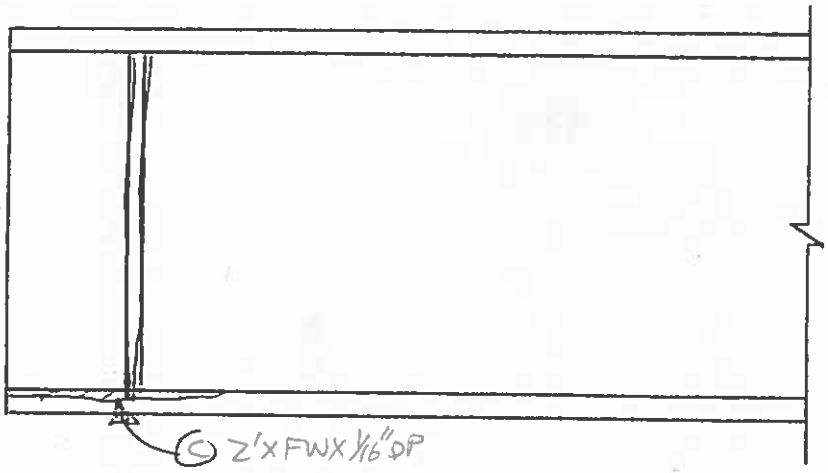

SPAN : , BEAM 13
ELEV. AT P13

REVISION 1	DATE	CREW	COMPANY	REVISION 3	DATE	CREW	COMPANY
REVISION 2	DATE	CREW	COMPANY	REVISION 4	DATE	CREW	COMPANY

Dewberry
59 Elm Street, Suite 101
New Haven, CT 06510

FIELD NOTES

JOB NO.

BRIDGE NO: 03014 A

DATE: 7/14/14

SHEET OF

CREW: RFP, PHH

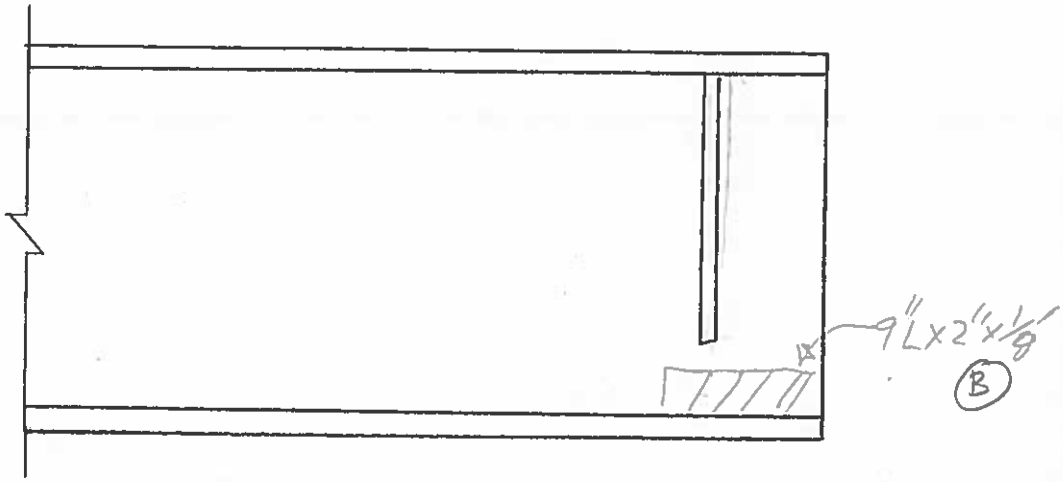

SPAN M, BEAM 14
EAST ELEV. AT P13

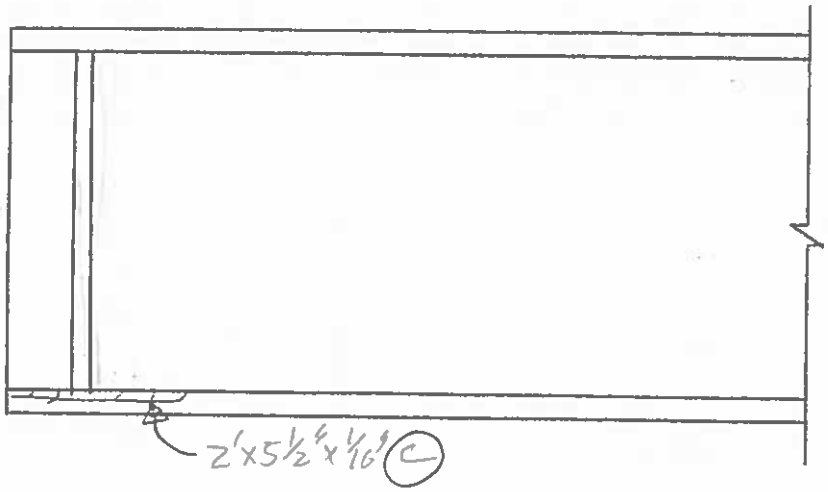

SPAN M, BEAM 14
WEST ELEV. AT P13

REVISION	DATE	CREW	COMPANY	REVISION	DATE	CREW	COMPANY
1				3			
2				4			

Dewberry

59 Elm Street, Suite 101
New Haven, CT 06510

FIELD NOTES

JOB NO.

BRIDGE NO: 03014A

DATE: 7/14/14

SHEET OF

CREW: RFP, PHH

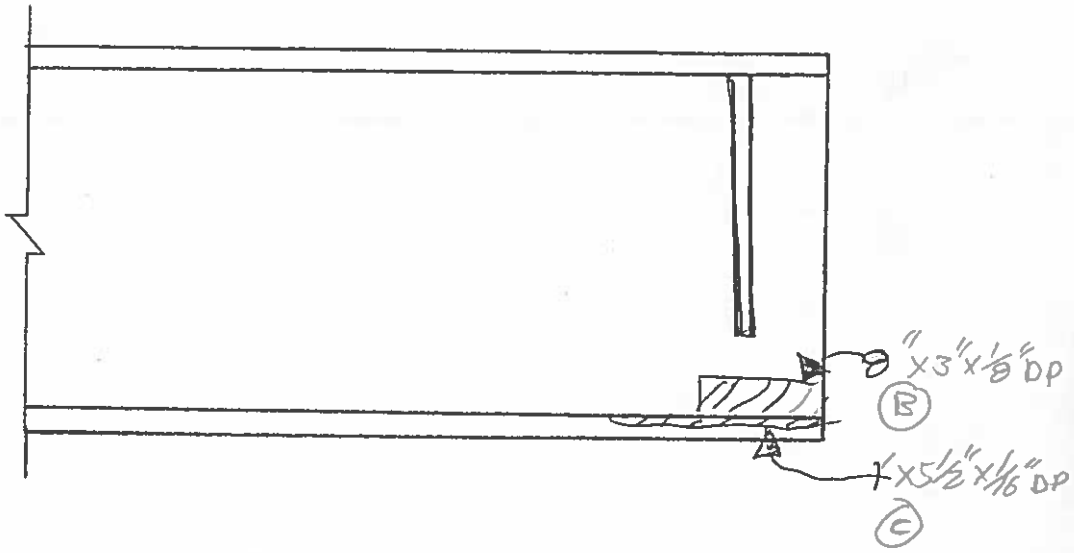

SPAN M, BEAM 15
EAST ELEV. AT P13

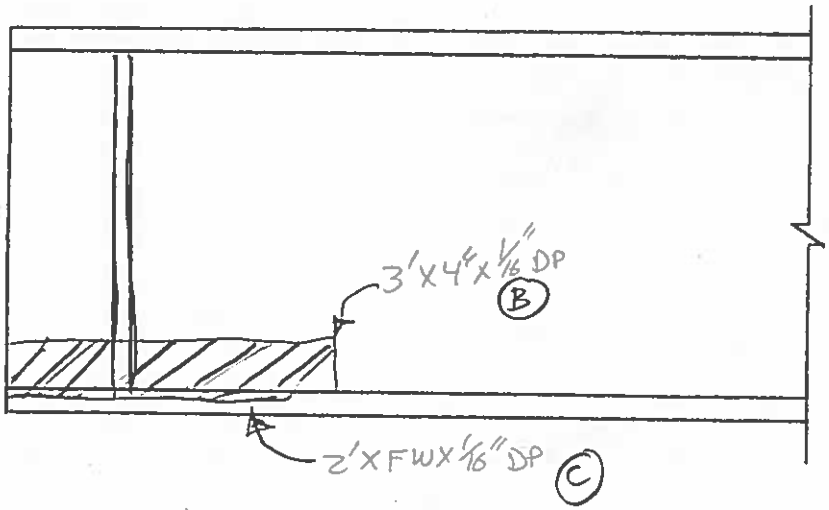

SPAN M, BEAM 15
WEST ELEV. AT P13

REVISION	DATE	CREW	COMPANY	REVISION	DATE	CREW	COMPANY
1				3			
2				4			

Dewberry
59 Elm Street, Suite 101
New Haven, CT 06510

FIELD NOTES

JOB NO.

BRIDGE NO: 03014 A

DATE: 7/14/14

SHEET OF

CREW: RFP, PHH

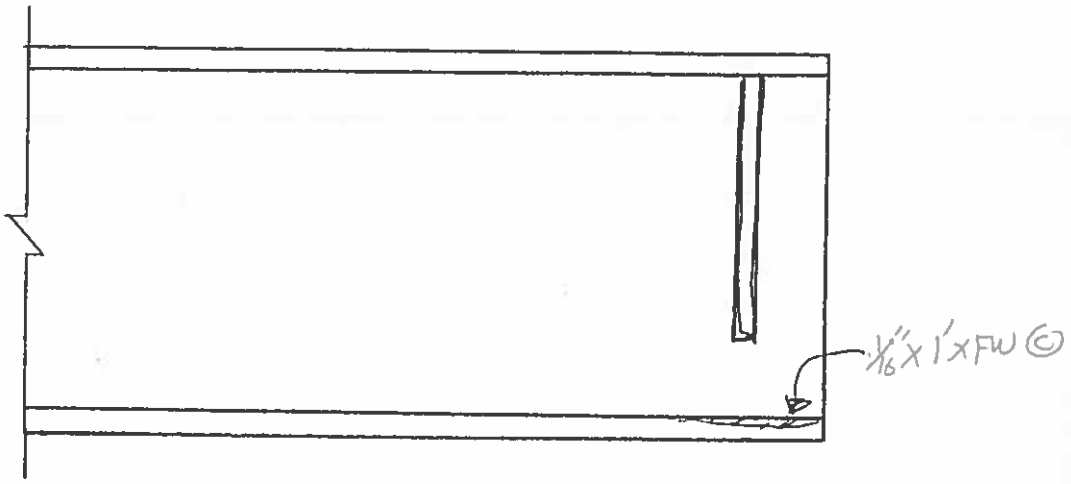

SPAN M, BEAM 16
EAST ELEV. AT P13

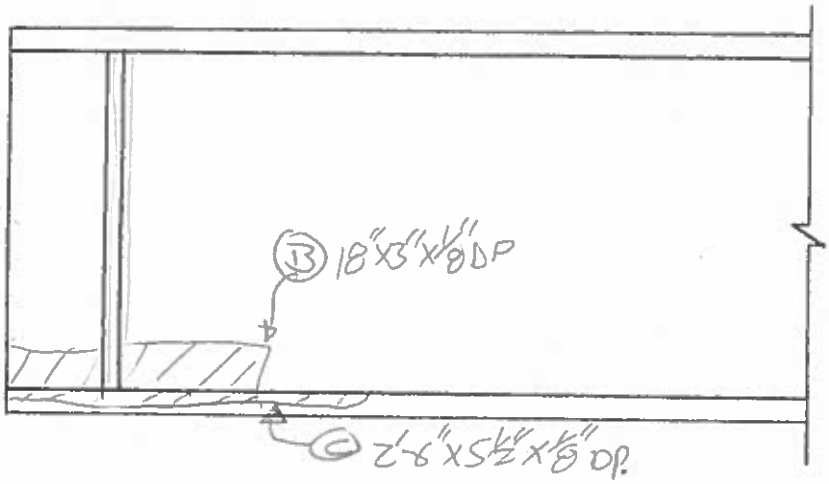

SPAN M, BEAM 16
WEST ELEV. AT P13

REVISION	DATE	CREW	COMPANY	REVISION	DATE	CREW	COMPANY
1				3			
2				4			

Dewberry®	FIELD NOTES	JOB NO.	BRIDGE NO: 03014 A
59 Elm Street, Suite 101 New Haven, CT 06510		DATE: 7/14/14	SHEET OF
		CREW: RFP, PHH	

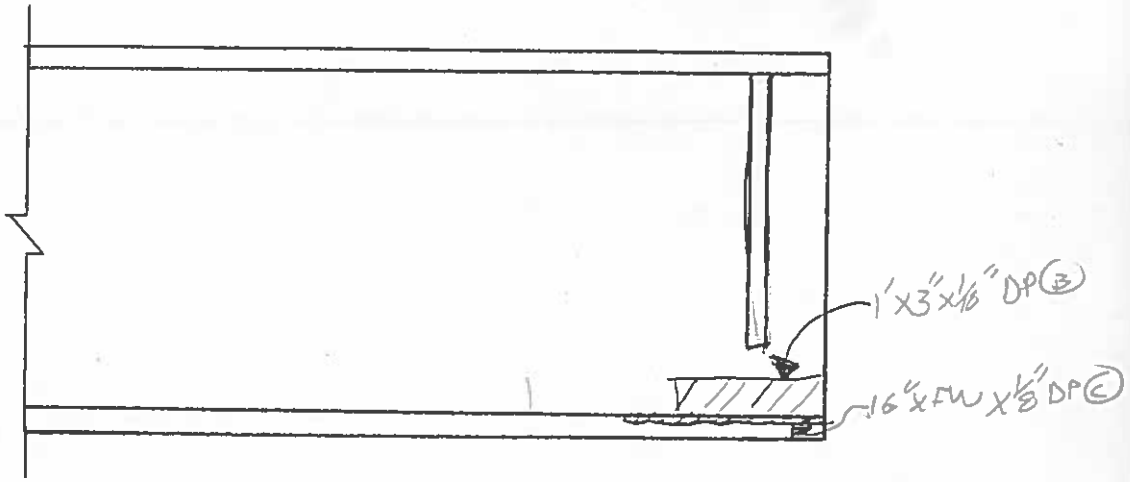

SPAN M, BEAM 17
EAST ELEV. AT P13

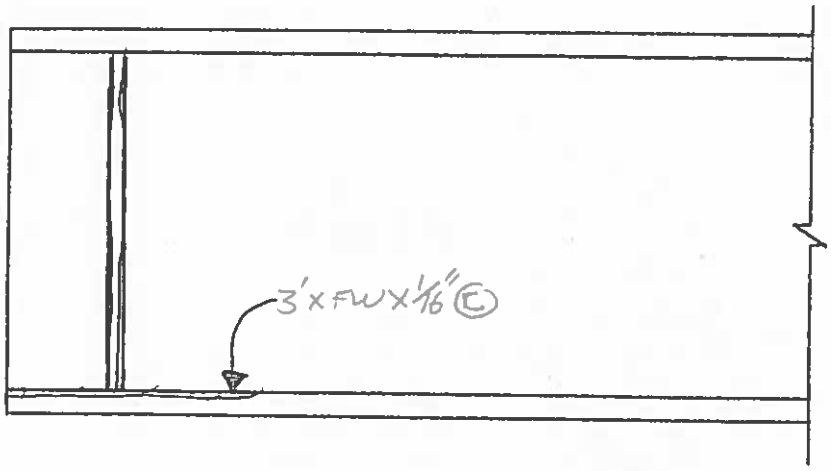

SPAN M, BEAM 17
WEST ELEV. AT P13

REVISION 1	DATE	CREW	COMPANY	REVISION 3	DATE	CREW	COMPANY
REVISION 2	DATE	CREW	COMPANY	REVISION 4	DATE	CREW	COMPANY

Dewberry
59 Elm Street, Suite 101
New Haven, CT 06510

FIELD NOTES

JOB NO.

BRIDGE NO: 03014 A

DATE: 7/14/14

SHEET OF

CREW: RFP, PHH

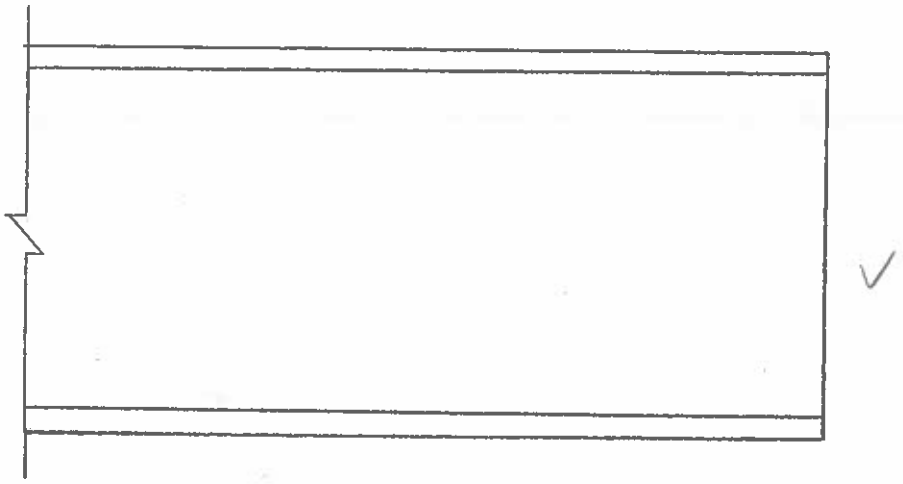

✓

SPAN M, BEAM 18
EAST ELEV. AT P13

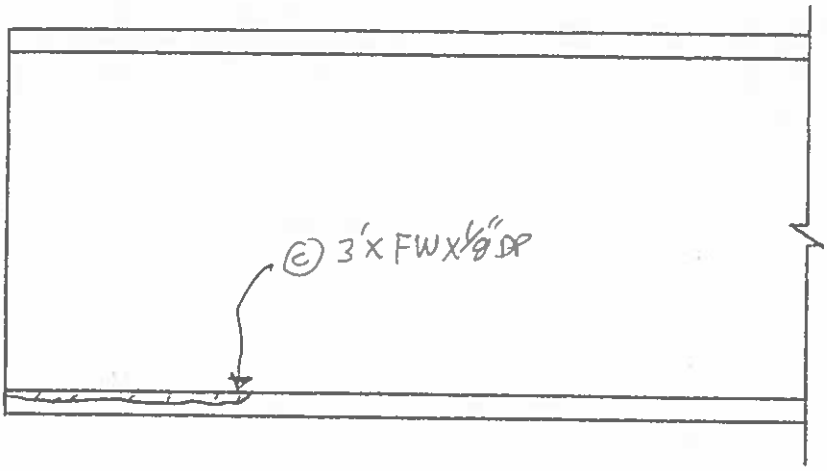

SPAN M, BEAM 18
WEST ELEV. AT P13

REVISION	DATE	CREW	COMPANY	REVISION	DATE	CREW	COMPANY
1				3			
2				4			

Dewberry	FIELD NOTES	JOB NO.	BRIDGE NO: 03014A
59 Elm Street, Suite 101 New Haven, CT 06510		DATE: 7/14/14	SHEET OF
		CREW: RFP, PHH	

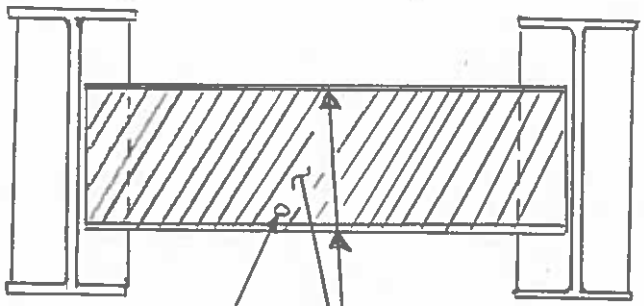

BAY 7 END DIAPHRAGM

SPAN M @ P12

REVISION 1	DATE	CREW	COMPANY	REVISION 3	DATE	CREW	COMPANY
REVISION 2	DATE	CREW	COMPANY	REVISION 4	DATE	CREW	COMPANY

Dewberry
59 Elm Street, Suite 101
New Haven, CT 06510

FIELD NOTES	JOB NO.	BRIDGE NO: 03014A
	DATE: 7/14/14	SHEET OF
	CREW: RFP, PHH	

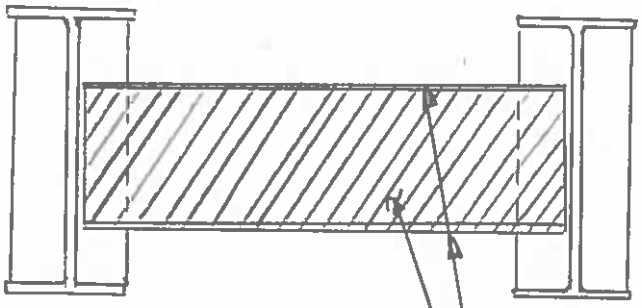

BAY 10 END DIAPHAGM

SPAN M @ P13

REVISION 1	DATE	CREW	COMPANY	REVISION 3	DATE	CREW	COMPANY
REVISION 2	DATE	CREW	COMPANY	REVISION 4	DATE	CREW	COMPANY

SPAN N

FIELD NOTES

PREPARED BY: Garg Consulting Services, Inc. ENGINEERS • CONSULTANTS • CONSTRUCTION MANAGERS	PROJ. NO. 170-3013	BRIDGE NO. 3014A
	DATE: 9/16/10	SHEET 8k 60
	CREW: PKG, MD	

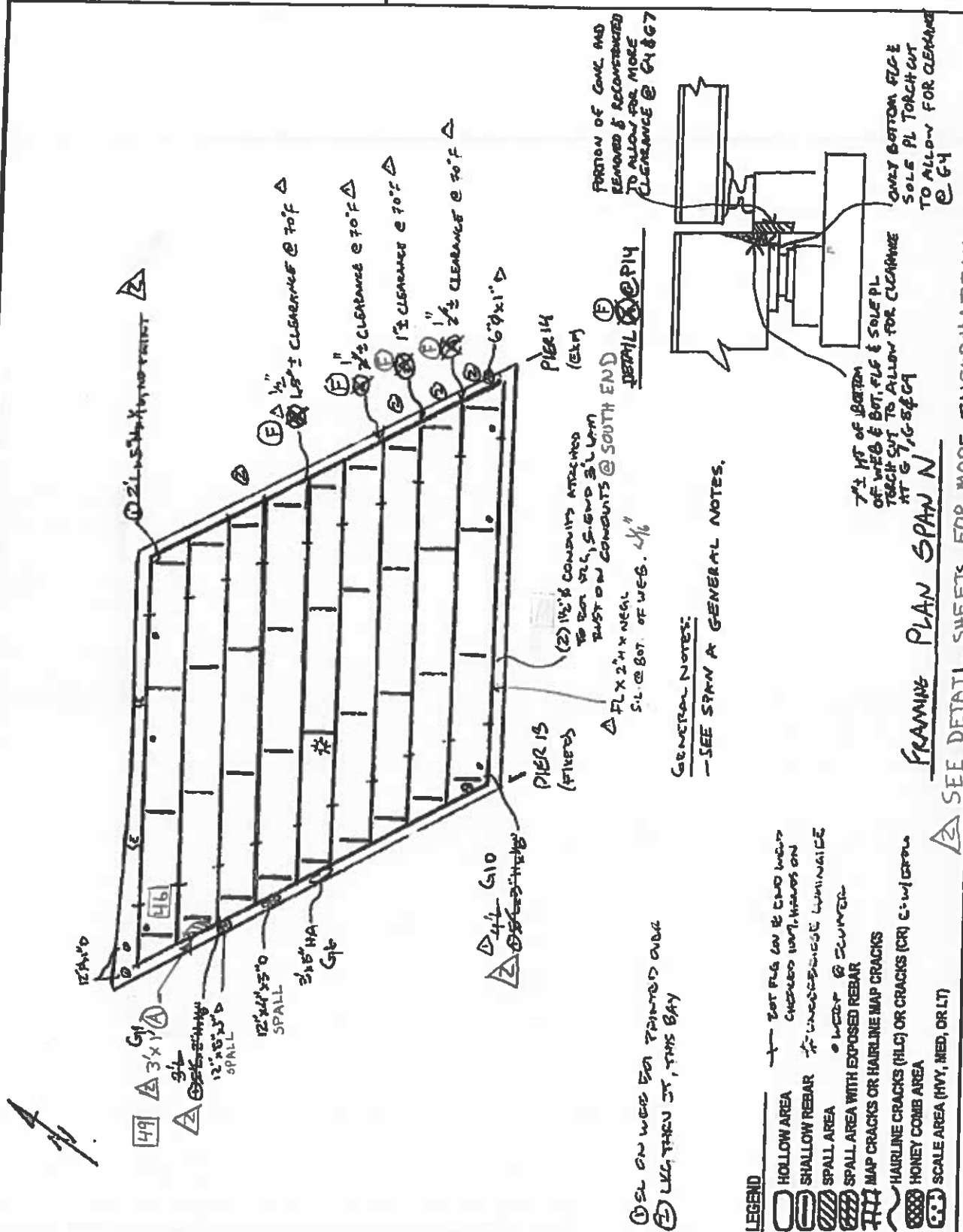

Revision	Date	Crew	Company	Revision	Date	Crew	Company
1	9/11/12	PKG, AKC	G+12				
2	6/23/14 & 7/3/14	RFP, PHH	DEW				

Dewberry
59 Elm Street, Suite 101
New Haven, CT 06510

FIELD NOTES

JOB NO.

BRIDGE NO: 03014A

DATE: 6/23/14

SHEET OF

CREW: PM/AJRFP

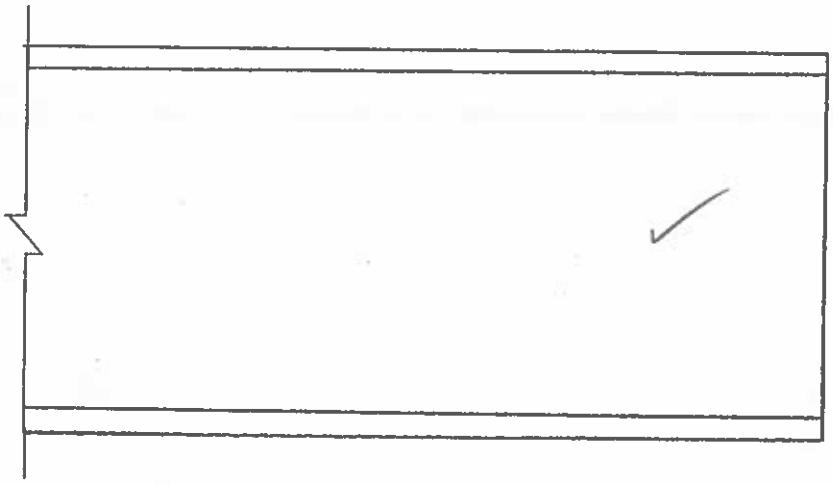

SPAN N, BEAM N-1
WEST ELEV. AT PIER 13

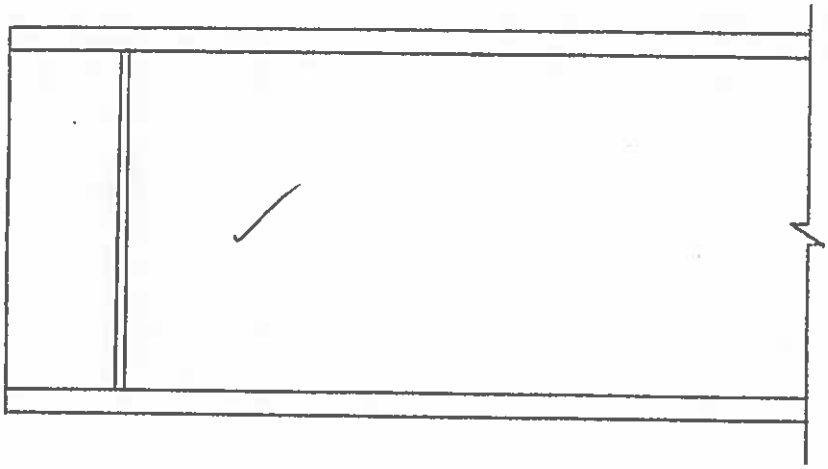

SPAN N, BEAM N-1
EAST ELEV. AT PIER 13

REVISION	DATE	CREW	COMPANY	REVISION	DATE	CREW	COMPANY
1				3			
2				4			

Dewberry
59 Elm Street, Suite 101
New Haven, CT 06510

FIELD NOTES	JOB NO.	BRIDGE NO: 03014 A
	DATE: 6/23/14	SHEET OF
	CREW: PMH, RFP	

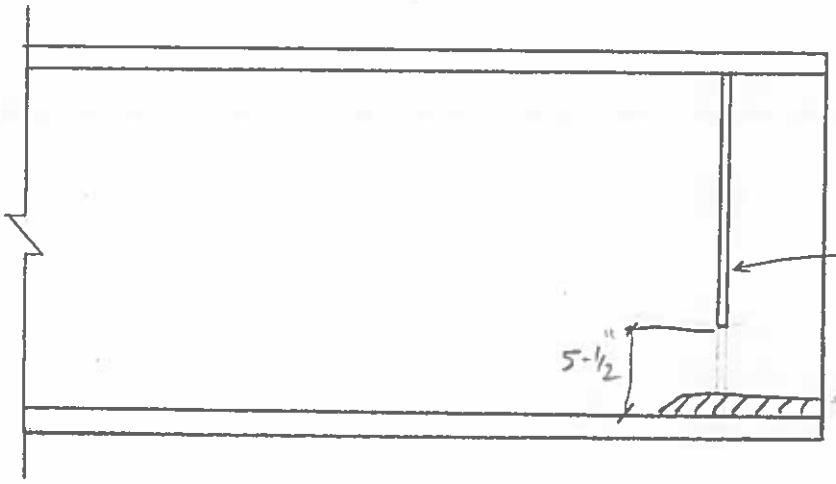

SPAN N, BEAM N-2
WEST ELEV. AT PIER 13

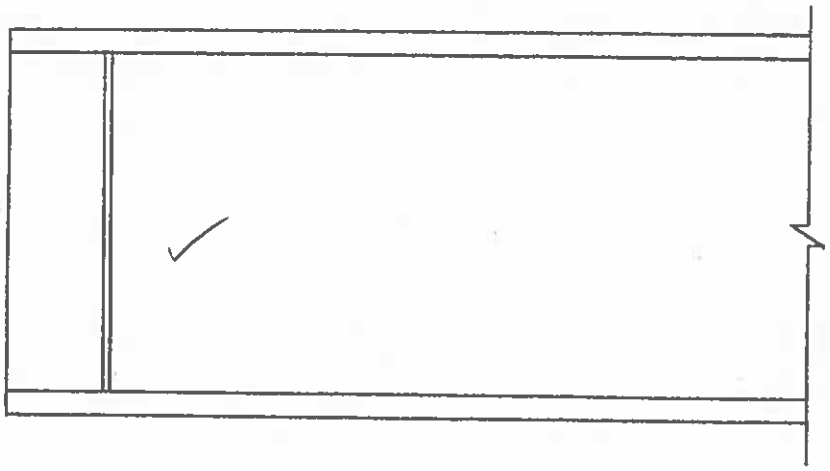

SPAN N, BEAM N-2
EAST ELEV. AT PIER 13

REVISION 1	DATE	CREW	COMPANY	REVISION 3	DATE	CREW	COMPANY
REVISION 2	DATE	CREW	COMPANY	REVISION 4	DATE	CREW	COMPANY

Dewberry®	FIELD NOTES	JOB NO.	BRIDGE NO: 03014 A
59 Elm Street, Suite 101 New Haven, CT 06510		DATE: 6/23/14	SHEET OF
		CREW: PHM, RFP	

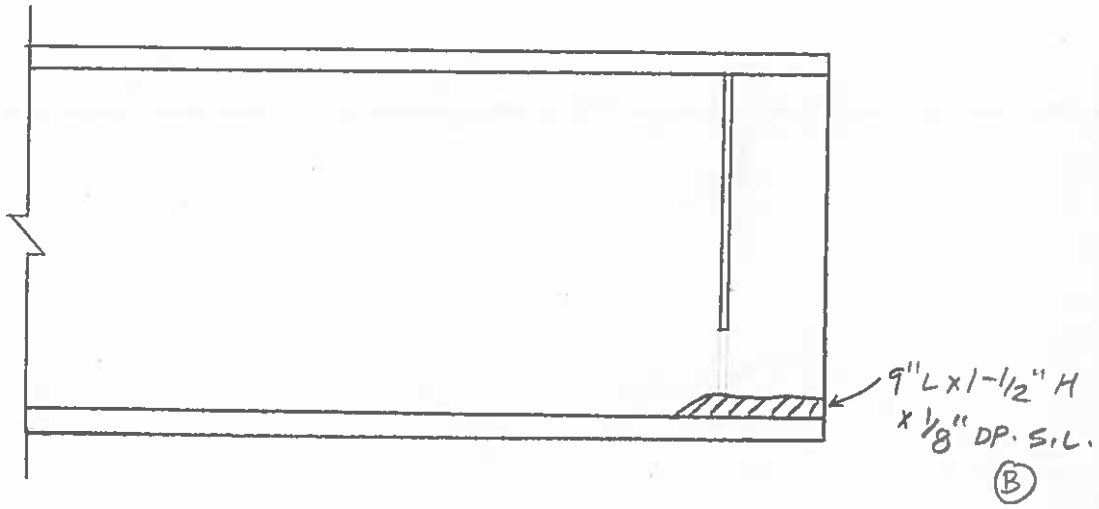

SPAN N, BEAM N-3
WEST ELEV. AT PIER 13

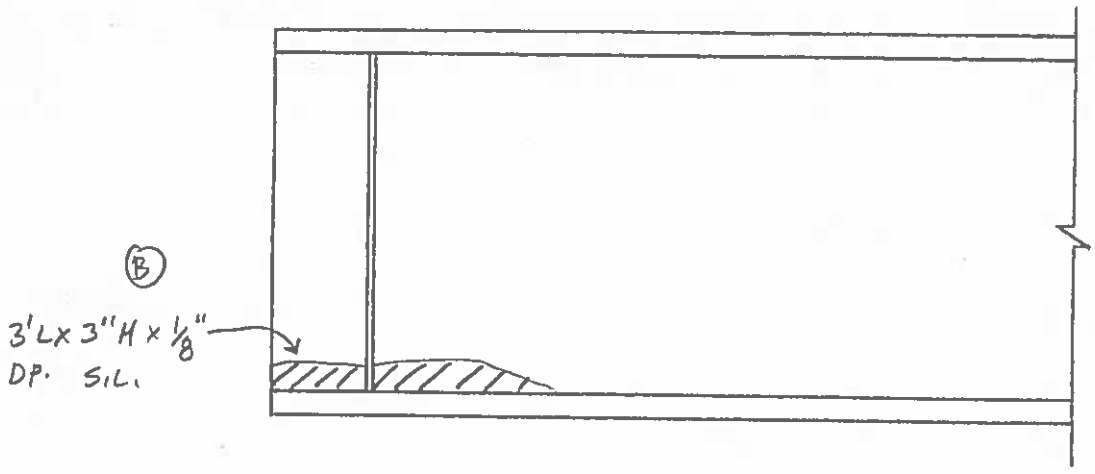

SPAN N, BEAM N-3
EAST ELEV. AT PIER 13

REVISION	DATE	CREW	COMPANY	REVISION	DATE	CREW	COMPANY
1				3			
2				4			

Dewberry
59 Elm Street, Suite 101
New Haven, CT 06510

FIELD NOTES

JOB NO.

BRIDGE NO: 03014 A

DATE: 6/23/14

SHEET OF

CREW: PHH, IRFP

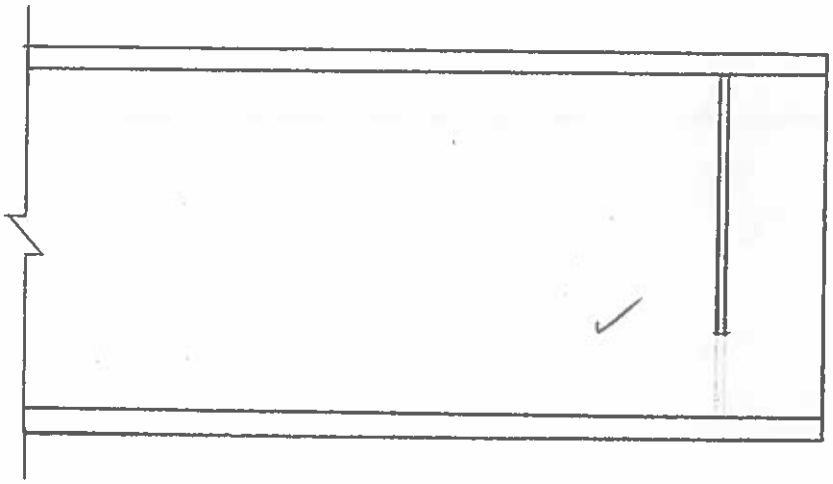

SPAN N, BEAM N-4
WEST ELEV. AT PIER 13

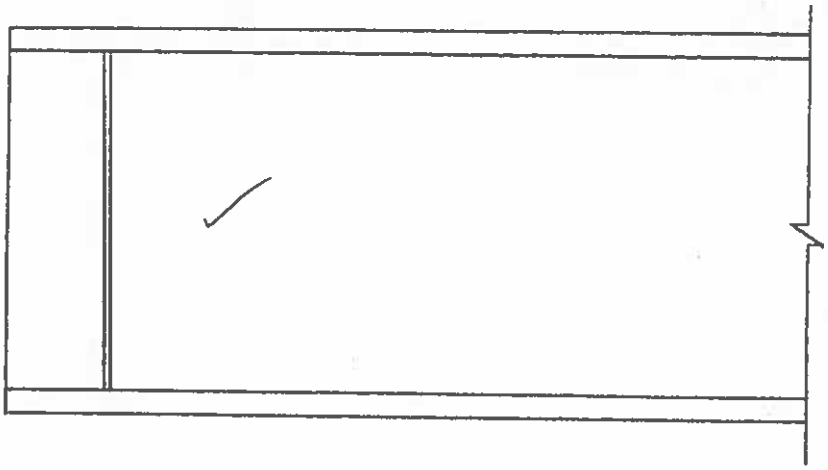

SPAN N, BEAM N-4
EAST ELEV. AT PIER 13

REVISION	DATE	CREW	COMPANY	REVISION	DATE	CREW	COMPANY
1				3			
2				4			

Dewberry	FIELD NOTES	JOB NO.	BRIDGE NO: 03014 A
59 Elm Street, Suite 101 New Haven, CT 06510		DATE: 6/23/14	SHEET OF
		CREW: PMA, RFP	

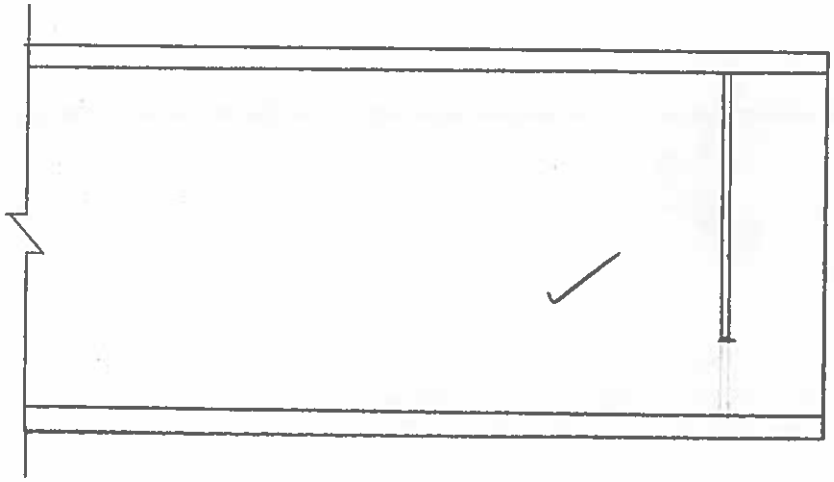

SPAN N , BEAM N-5
WEST ELEV. AT PIER 13

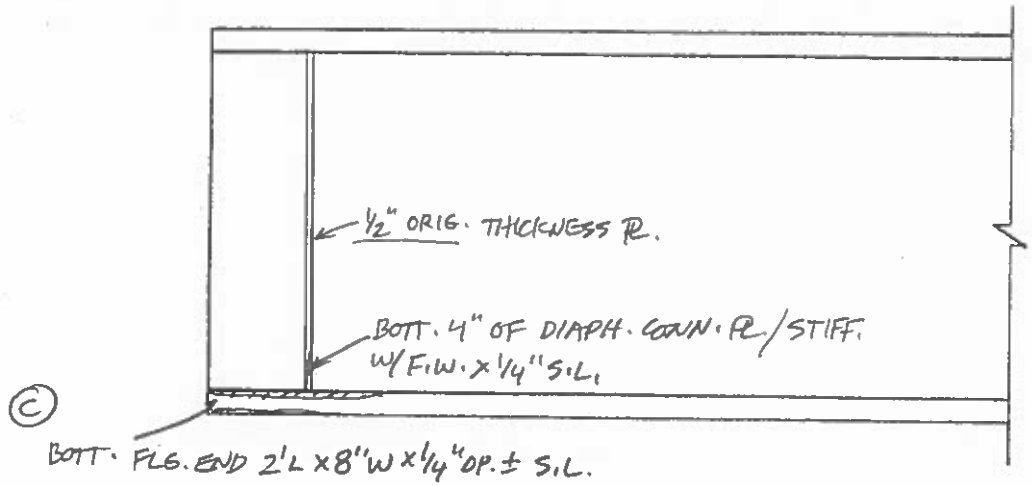

SPAN N , BEAM N-5
EAST ELEV. AT PIER 13

REVISION 1	DATE	CREW	COMPANY	REVISION 3	DATE	CREW	COMPANY
REVISION 2	DATE	CREW	COMPANY	REVISION 4	DATE	CREW	COMPANY

Dewberry
59 Elm Street, Suite 101
New Haven, CT 06510

FIELD NOTES

JOB NO.

BRIDGE NO: 03014 A

DATE: 6/23/14

SHEET OF

CREW: RFP, PGHH

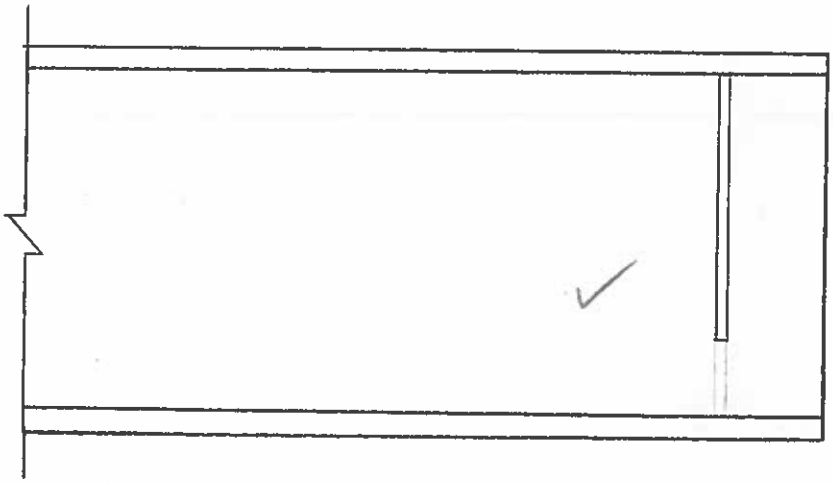

SPAN N, BEAM N-6
WEST ELEV. AT PIER 13

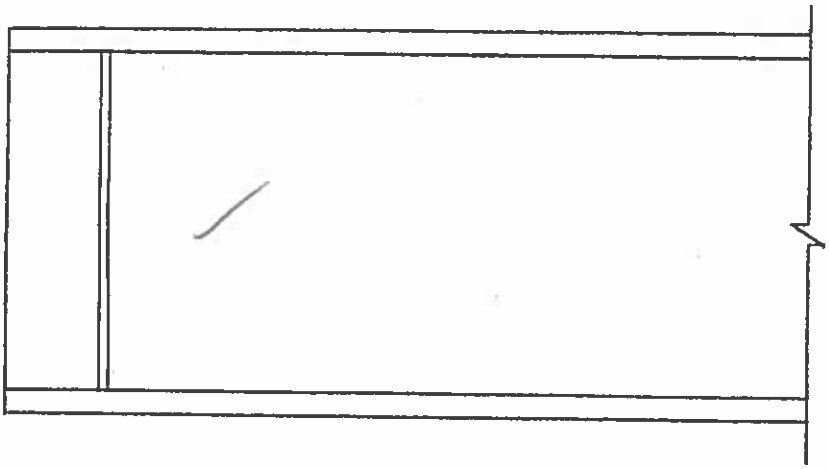

SPAN N, BEAM N-6
EAST ELEV. AT PIER 13

REVISION	DATE	CREW	COMPANY	REVISION	DATE	CREW	COMPANY
1				3			
2				4			

Dewberry	FIELD NOTES	JOB NO.	BRIDGE NO: 03014 A
59 Elm Street, Suite 101 New Haven, CT 06510		DATE: 6/23/14	SHEET OF
		CREW: PHH, RFP	

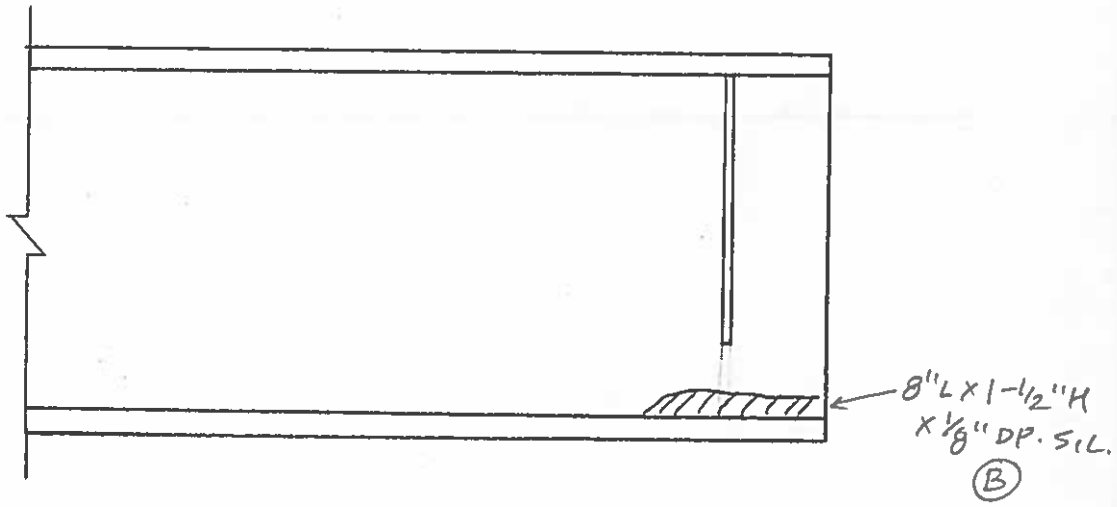

SPAN N, BEAM N-7
WEST ELEV. AT PIER 13

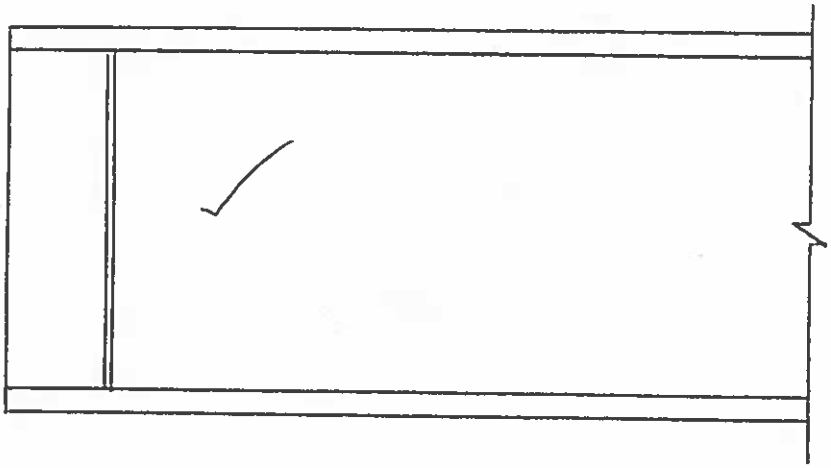

SPAN N, BEAM N-7
EAST ELEV. AT PIER 13

REVISION 1	DATE	CREW	COMPANY	REVISION 3	DATE	CREW	COMPANY
REVISION 2	DATE	CREW	COMPANY	REVISION 4	DATE	CREW	COMPANY

Dewberry

59 Elm Street, Suite 101
New Haven, CT 06510

FIELD NOTES

JOB NO.

BRIDGE NO: 03014 A

DATE: 6/23/14

SHEET OF

CREW: PTH, RFP

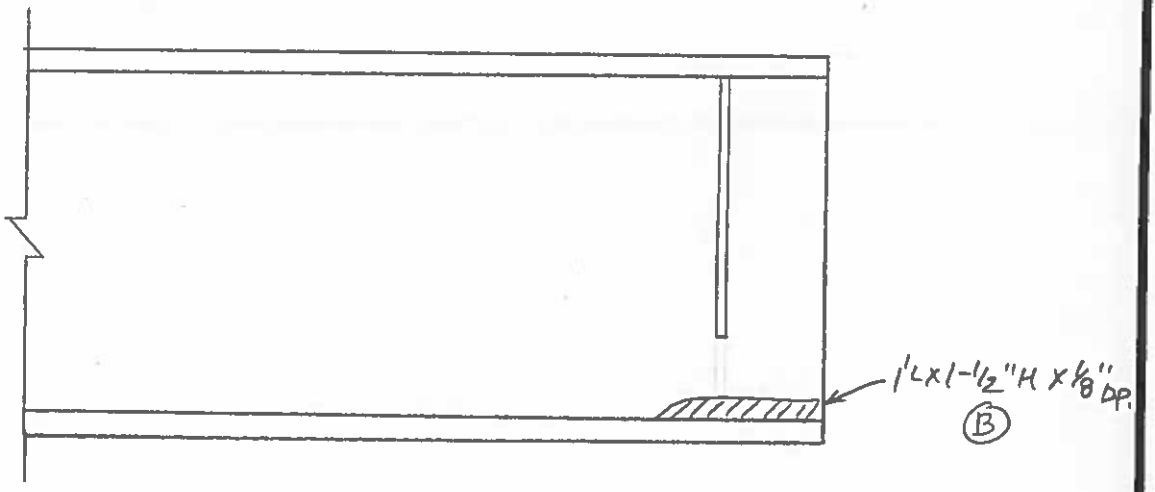

SPAN N, BEAM N-8
WEST ELEV. AT PIER 13

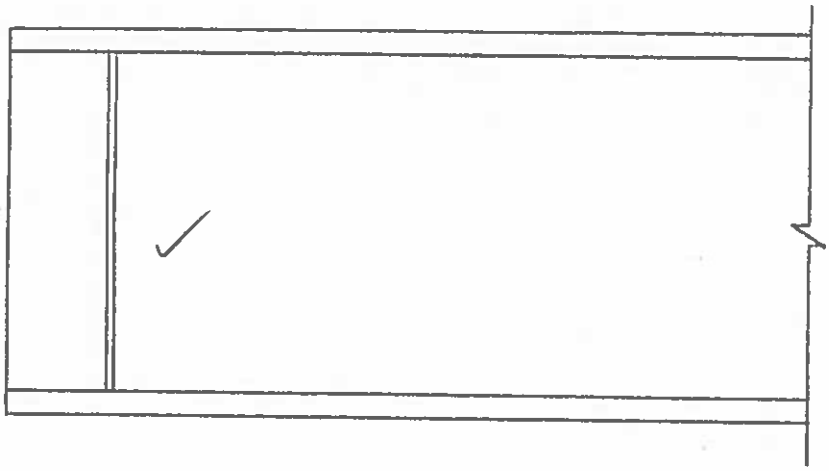

SPAN N, BEAM N-8
EAST ELEV. AT PIER 13

REVISION	DATE	CREW	COMPANY	REVISION	DATE	CREW	COMPANY
1				3			
2				4			

Dewberry®	FIELD NOTES	JOB NO.	BRIDGE NO: 03014 A
59 Elm Street, Suite 101 New Haven, CT 06510		DATE: 6/23/14	SHEET OF
		CREW: PMH, RFP	

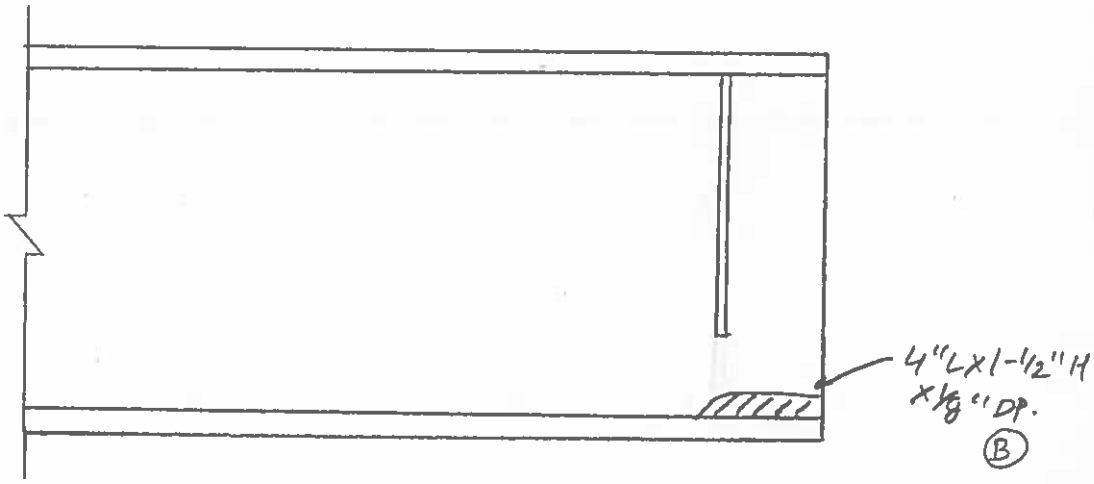

SPAN N, BEAM N-9
WEST ELEV. AT PIER 13

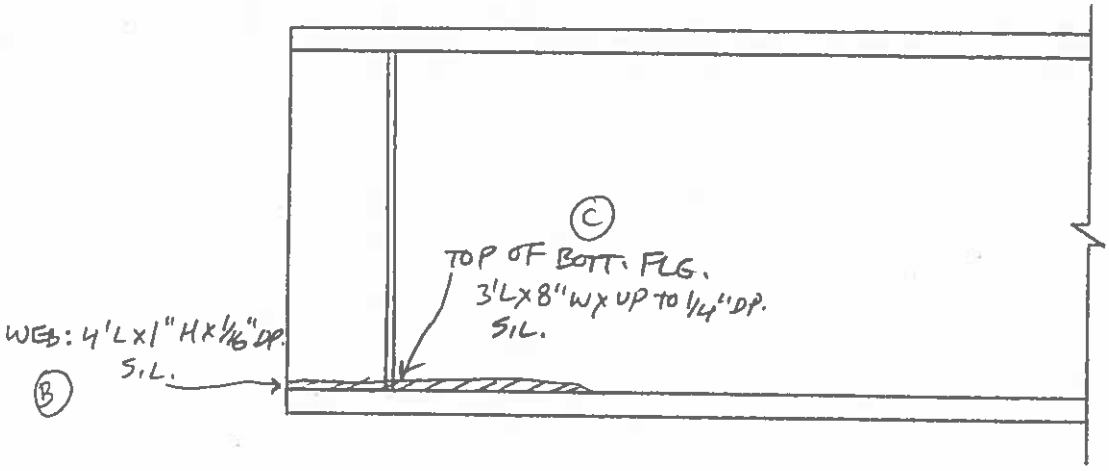

SPAN N, BEAM N-9
EAST ELEV. AT PIER 13

REVISION	DATE	CREW	COMPANY	REVISION	DATE	CREW	COMPANY
1				3			
2				4			

Dewberry
59 Elm Street, Suite 101
New Haven, CT 06510

FIELD NOTES	JOB NO.	BRIDGE NO: 03014A
	DATE: 6/23/14	SHEET OF
	CREW: PHH, RPP	

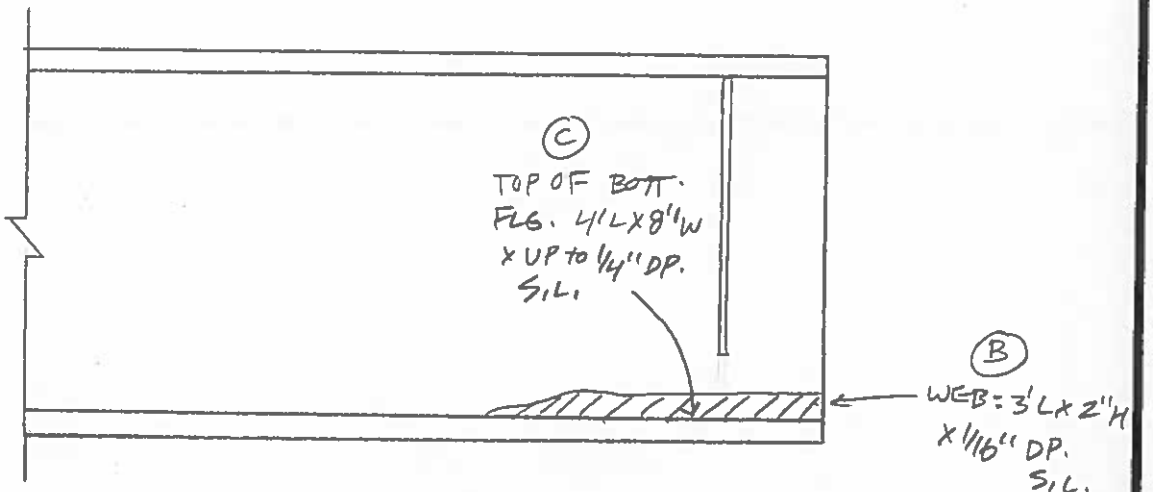

SPAN N, BEAM N-10
WEST ELEV. AT PIER 13

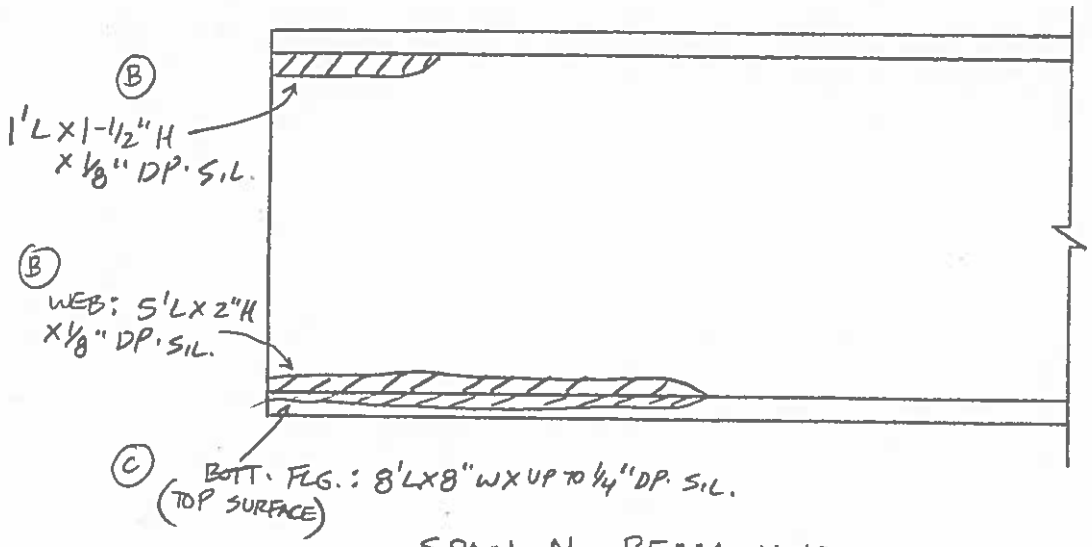

SPAN N, BEAM N-10
EAST ELEV. AT PIER 13

REVISION	DATE	CREW	COMPANY	REVISION	DATE	CREW	COMPANY
1				3			
2				4			

Dewberry® 59 Elm Street, Suite 101 New Haven, CT 06510	FIELD NOTES	JOB NO.	BRIDGE NO: 03014 A
		DATE: 7/3/2014	SHEET OF
		CREW: PHH, RFP	

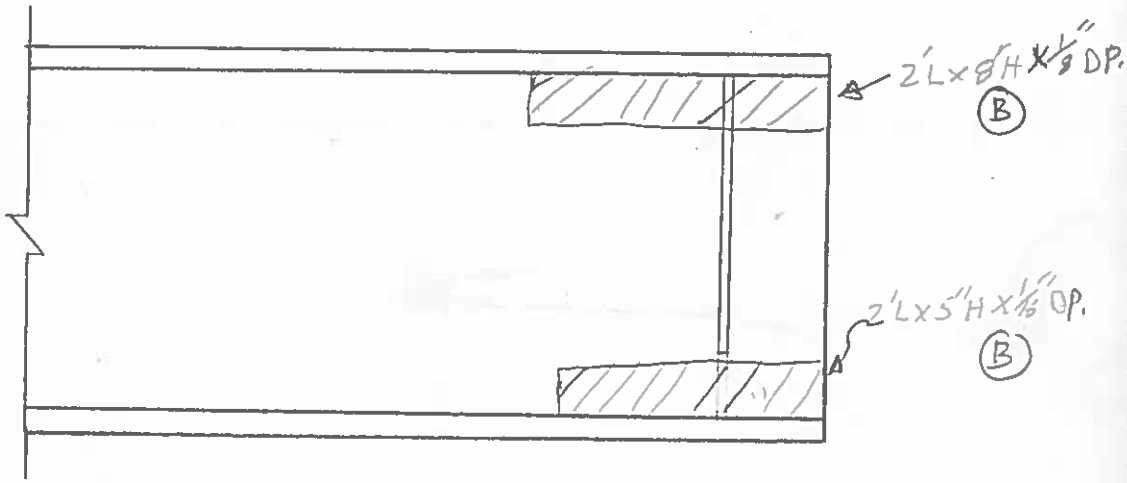

SPAN N, BEAM N-1
EAST ELEV. AT PIER 14

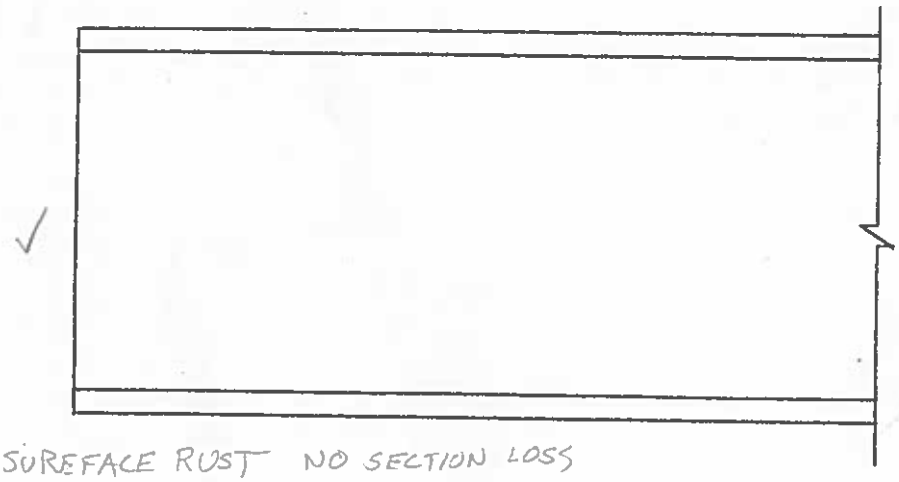

✓

- MODERATE SURFACE RUST NO SECTION LOSS

SPAN N, BEAM N-1
WEST ELEV. AT PIER 14

REVISION 1	DATE	CREW	COMPANY	REVISION 3	DATE	CREW	COMPANY
REVISION 2	DATE	CREW	COMPANY	REVISION 4	DATE	CREW	COMPANY

Dewberry

59 Elm Street, Suite 101
New Haven, CT 06510

FIELD NOTES

JOB NO.

BRIDGE NO: 03014A

DATE: 7/3/2014

SHEET OF

CREW: PHH, RFP

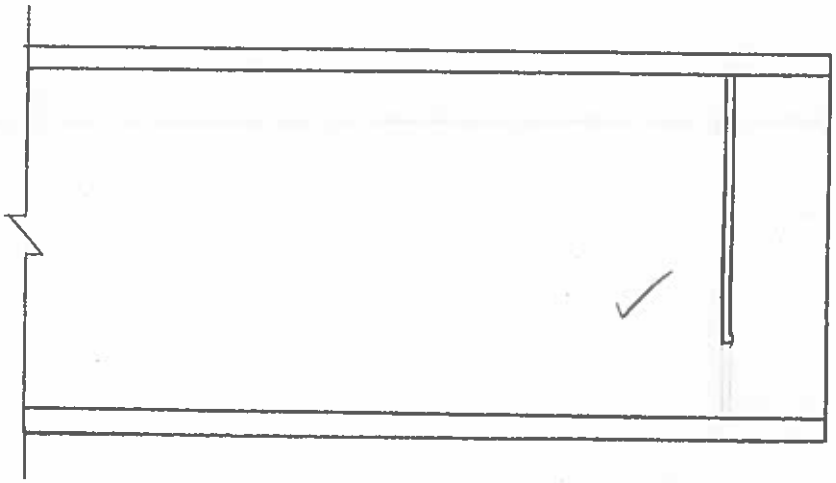

SPAN N , BEAM N-2
EAST ELEV. AT PIER 14

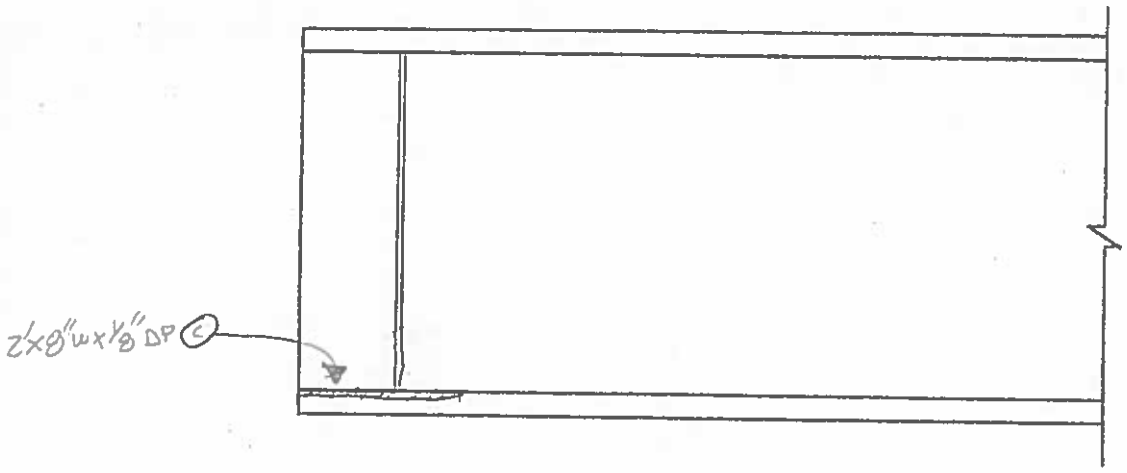

SPAN N , BEAM N-2
WEST ELEV. AT PIER 14

REVISION	DATE	CREW	COMPANY	REVISION	DATE	CREW	COMPANY
1				3			
2				4			

Dewberry® 59 Elm Street, Suite 101 New Haven, CT 06510	FIELD NOTES	JOB NO.	BRIDGE NO: 03014A
		DATE: 6/23/14	SHEET OF
		CREW: PHH, RFP	

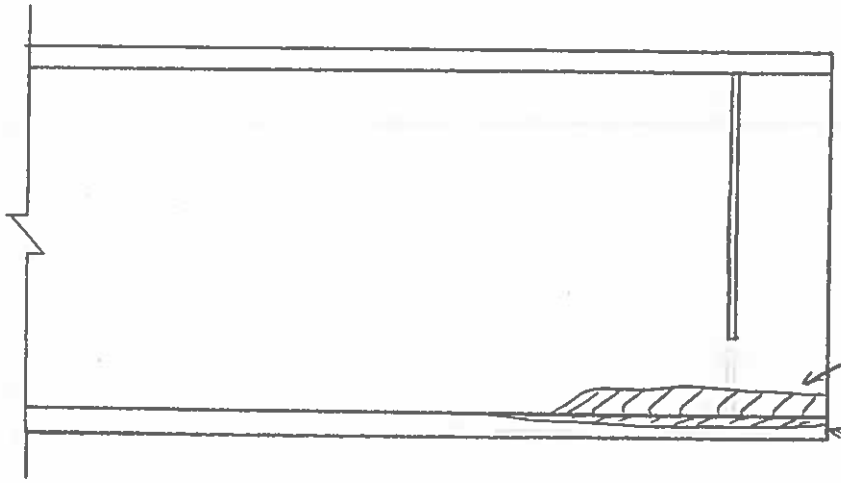

SPAN N, BEAM N-3
EAST ELEV. AT PIER 14

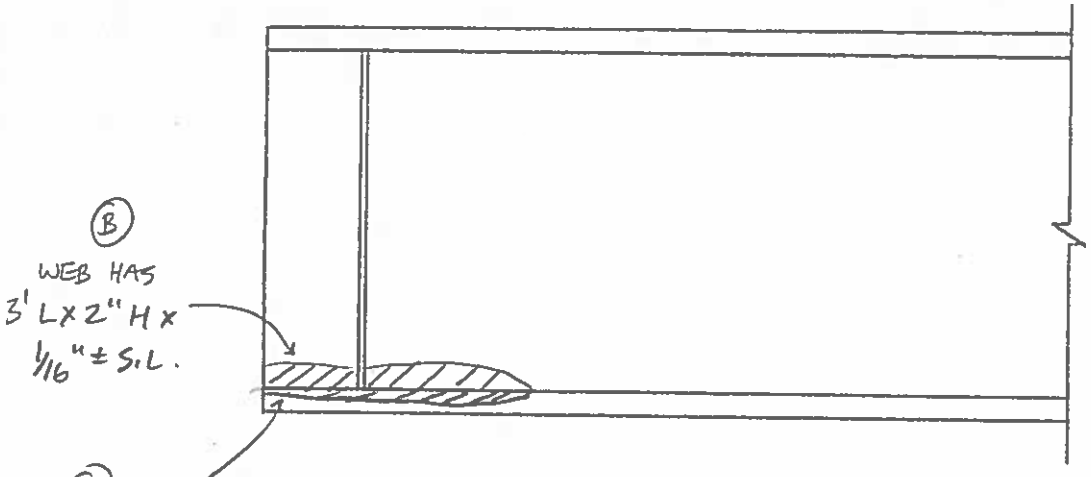

SPAN N, BEAM N-3
WEST ELEV. AT PIER 14

REVISION 1	DATE	CREW	COMPANY	REVISION 3	DATE	CREW	COMPANY
REVISION 2	DATE	CREW	COMPANY	REVISION 4	DATE	CREW	COMPANY

Dewberry®	FIELD NOTES	JOB NO.	BRIDGE NO: 03014 A
59 Elm Street, Suite 101 New Haven, CT 06510		DATE: 6/23/14	SHEET OF
		CREW: PHM, RFP	

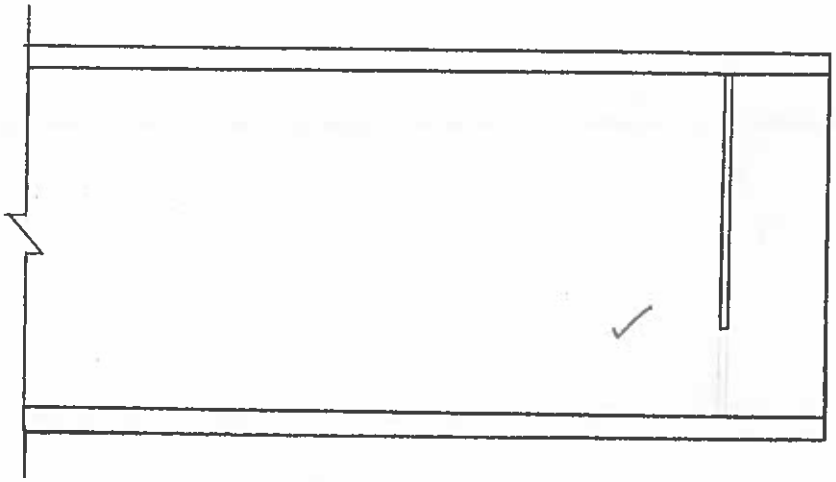

SPAN N, BEAM N-4
EAST ELEV. AT PIER 14

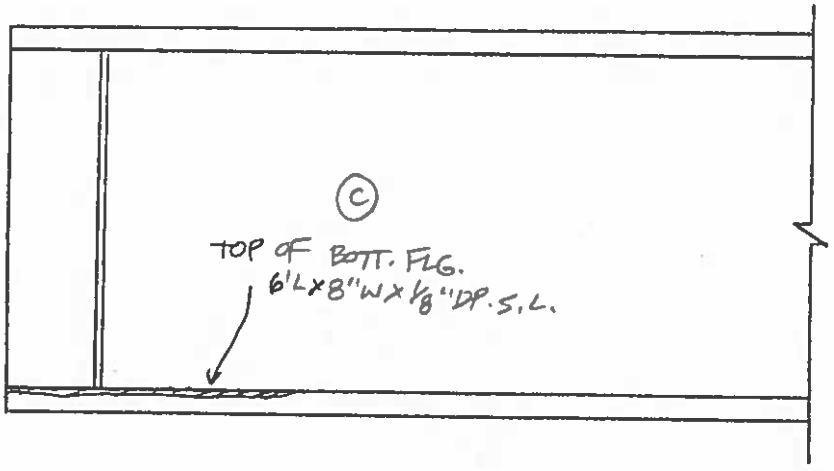

SPAN N, BEAM N-4
WEST ELEV. AT PIER 14

REVISION	DATE	CREW	COMPANY	REVISION	DATE	CREW	COMPANY
1				3			
2				4			

Dewberry®	FIELD NOTES	JOB NO.	BRIDGE NO: 03014 A
59 Elm Street, Suite 101 New Haven, CT 06510		DATE: 6/23/14	SHEET OF
		CREW: PMH, RFP	

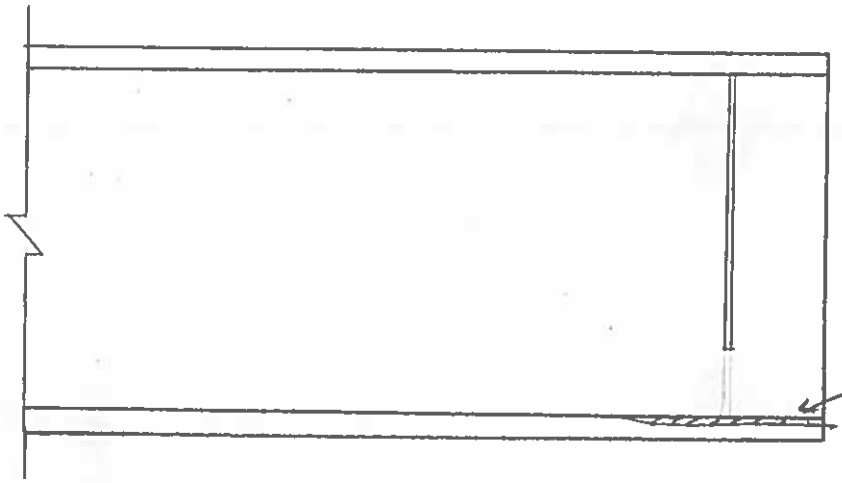

SPAN N, BEAM N-5
EAST ELEV. AT PIER 14

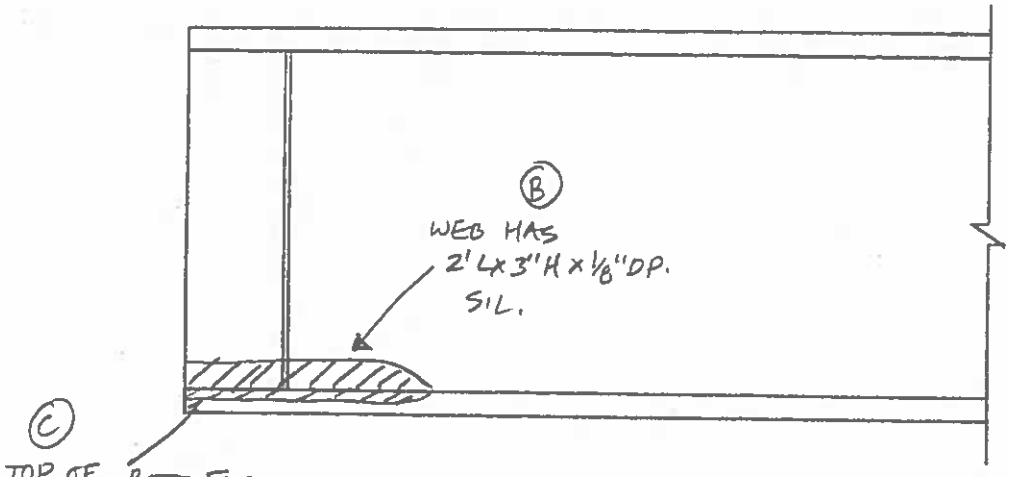

SPAN N, BEAM N-5
WEST ELEV. AT PIER 14

REVISION 1	DATE	CREW	COMPANY	REVISION 3	DATE	CREW	COMPANY
REVISION 2	DATE	CREW	COMPANY	REVISION 4	DATE	CREW	COMPANY

Dewberry
59 Elm Street, Suite 101
New Haven, CT 06510

FIELD NOTES

JOB NO.

BRIDGE NO: 03014 A

DATE: 6/23/14

SHEET OF

CREW: PHH, RFP

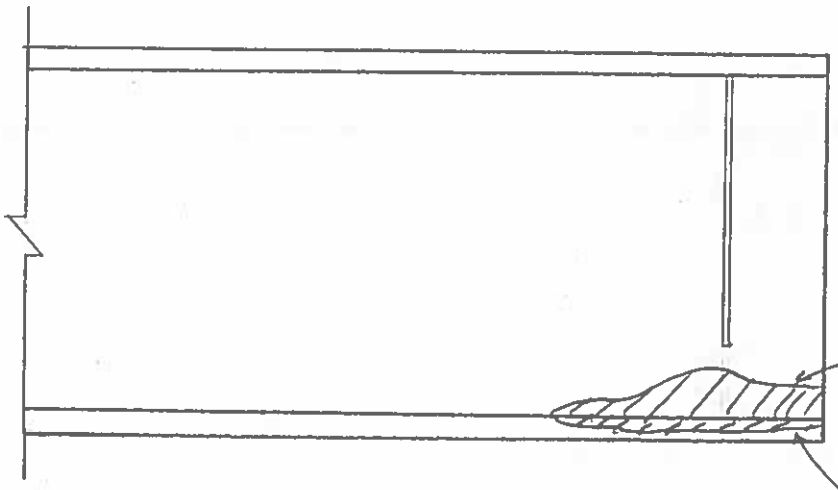

SPAN N, BEAM N-6
EAST ELEV. AT PIER 14

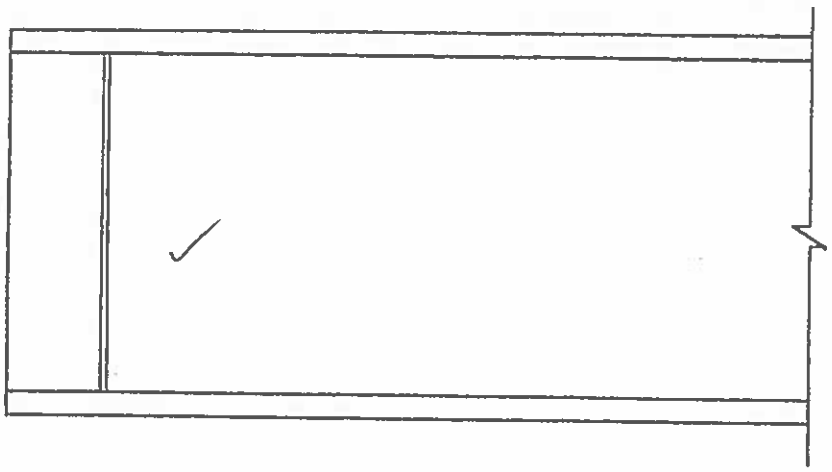

SPAN N, BEAM N-6
WEST ELEV. AT PIER 14

REVISION	DATE	CREW	COMPANY	REVISION	DATE	CREW	COMPANY
1				3			
2				4			

Dewberry
59 Elm Street, Suite 101
New Haven, CT 06510

FIELD NOTES

JOB NO.

BRIDGE NO: 03014 A

DATE: 6/23/14

SHEET OF

CREW: PMH, RFP

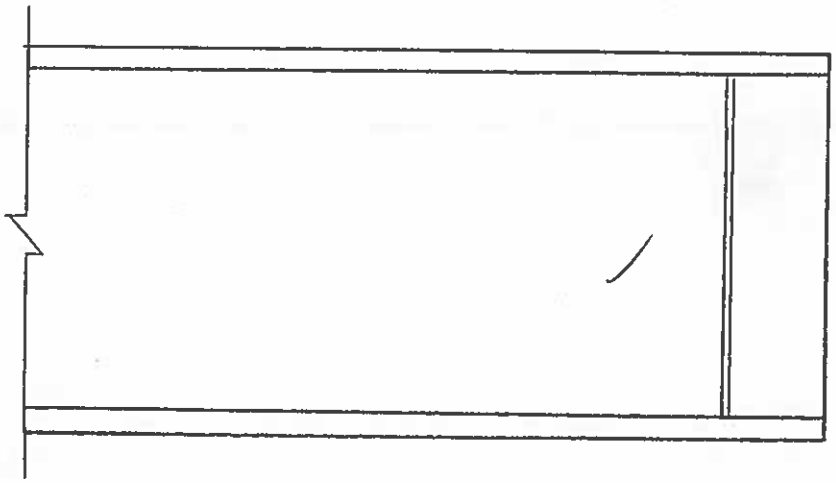

SPAN N, BEAM N-7
EAST ELEV. AT PIER 14

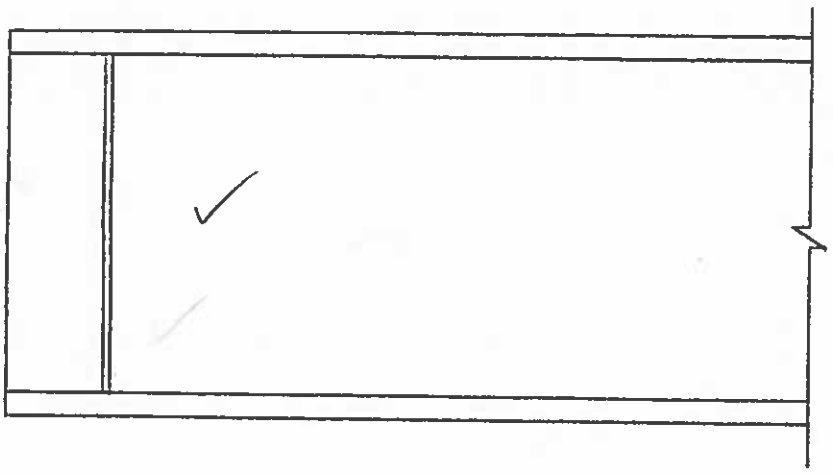

SPAN N, BEAM N-7
WEST ELEV. AT PIER 14

REVISION	DATE	CREW	COMPANY	REVISION	DATE	CREW	COMPANY
1				3			
2				4			

Dewberry
59 Elm Street, Suite 101
New Haven, CT 06510

FIELD NOTES

JOB NO.

BRIDGE NO: 03014A

DATE: 6/23/14

SHEET OF

CREW: PHA, RFP

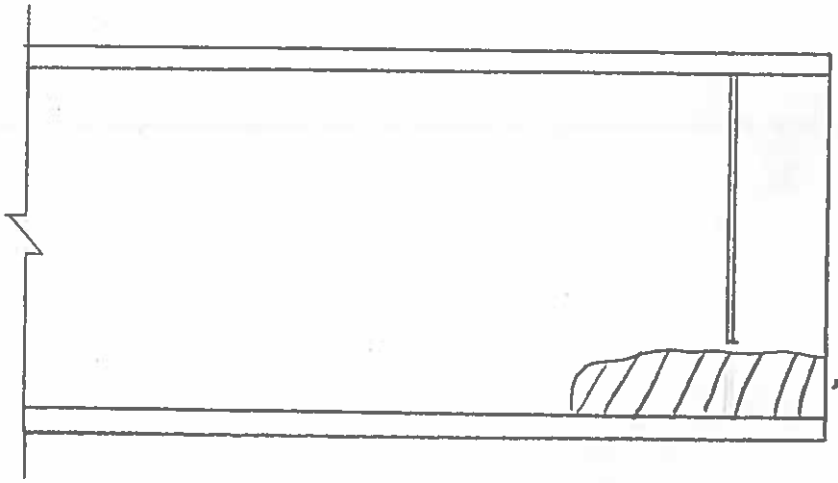

SPAN N, BEAM N-8
EAST ELEV. AT PIER 14

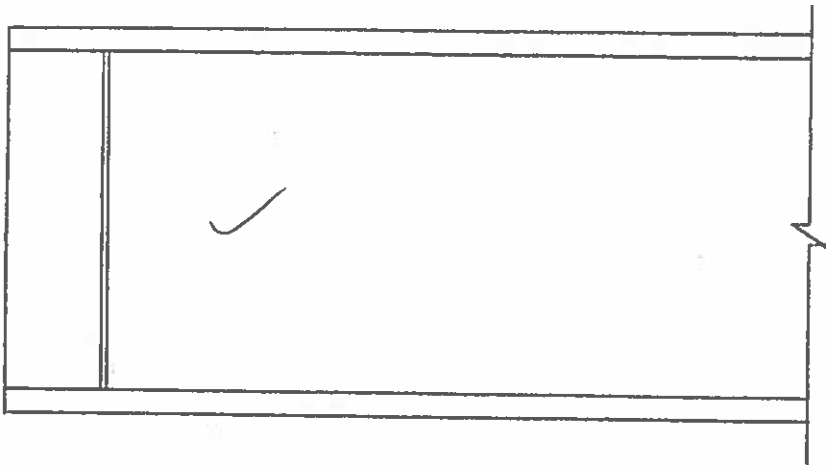

SPAN N, BEAM N-8
WEST ELEV. AT PIER 14

REVISION	DATE	CREW	COMPANY	REVISION	DATE	CREW	COMPANY
1				3			
2				4			

Dewberry
59 Elm Street, Suite 101
New Haven, CT 06510

FIELD NOTES

JOB NO.

BRIDGE NO: 03014 A

DATE: 6/23/14

SHEET OF

CREW: PHM, RFP

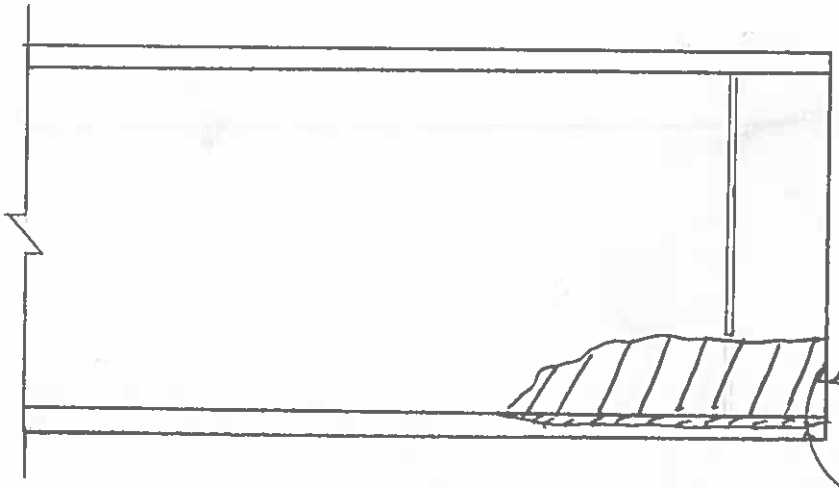

SPAN N, BEAM N-9
EAST ELEV. AT PIER 14

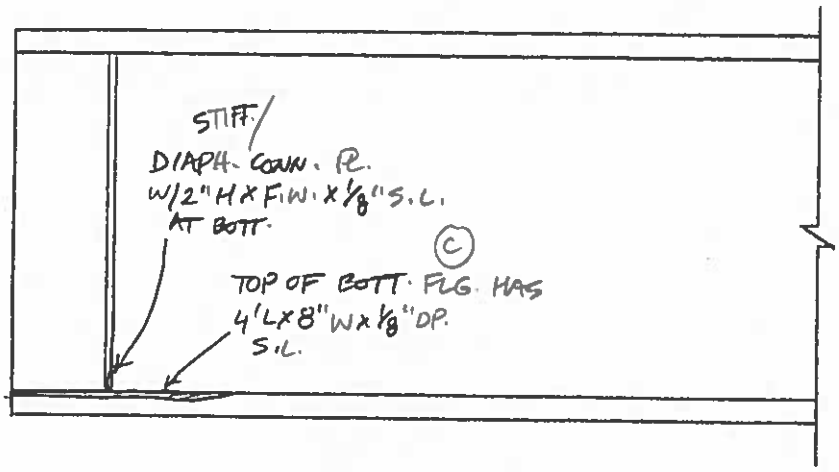

SPAN N, BEAM N-9
WEST ELEV. AT PIER 14

REVISION	DATE	CREW	COMPANY	REVISION	DATE	CREW	COMPANY
1				3			
2				4			

Dewberry
59 Elm Street, Suite 101
New Haven, CT 06510

FIELD NOTES

JOB NO.

BRIDGE NO: 03014A

DATE: 6/23/14

SHEET OF

CREW: PMA, JEP

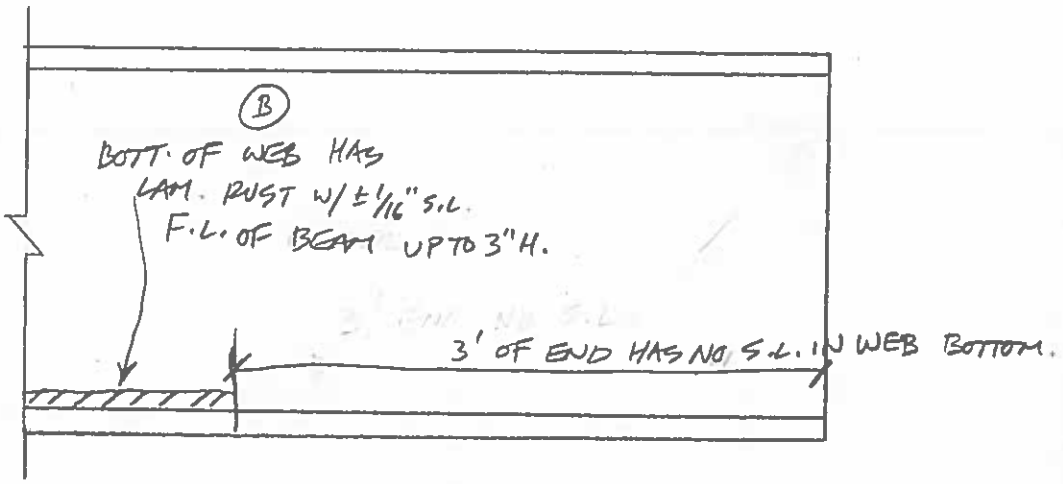

SPAN N, BEAM N-10
EAST ELEV. AT PIER 14

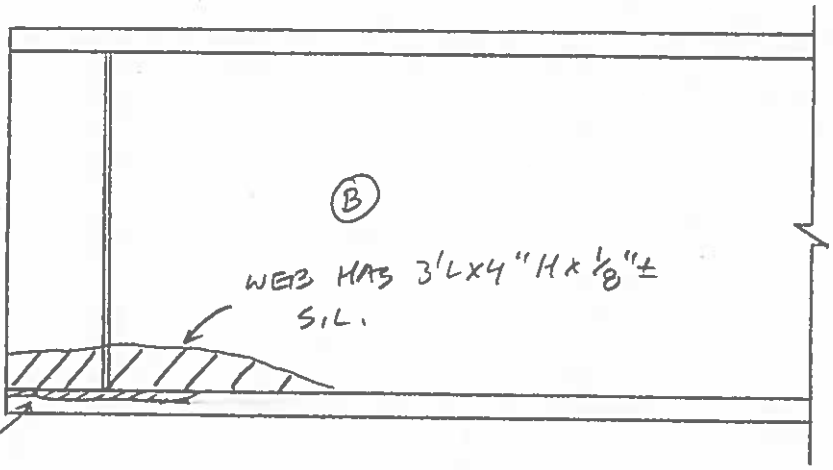

SPAN N, BEAM N-10
WEST ELEV. AT PIER 14

REVISION	DATE	CREW	COMPANY	REVISION	DATE	CREW	COMPANY
1				3			
2				4			

SPAN O

FIELD NOTES

PREPARED BY: Garg Consulting Services, Inc.	PROJ. NO. 170-3013	BRIDGE NO. 3014A
	DATE: 09/17/2010	SHEET 62 61
	CREW: PDG, MD	

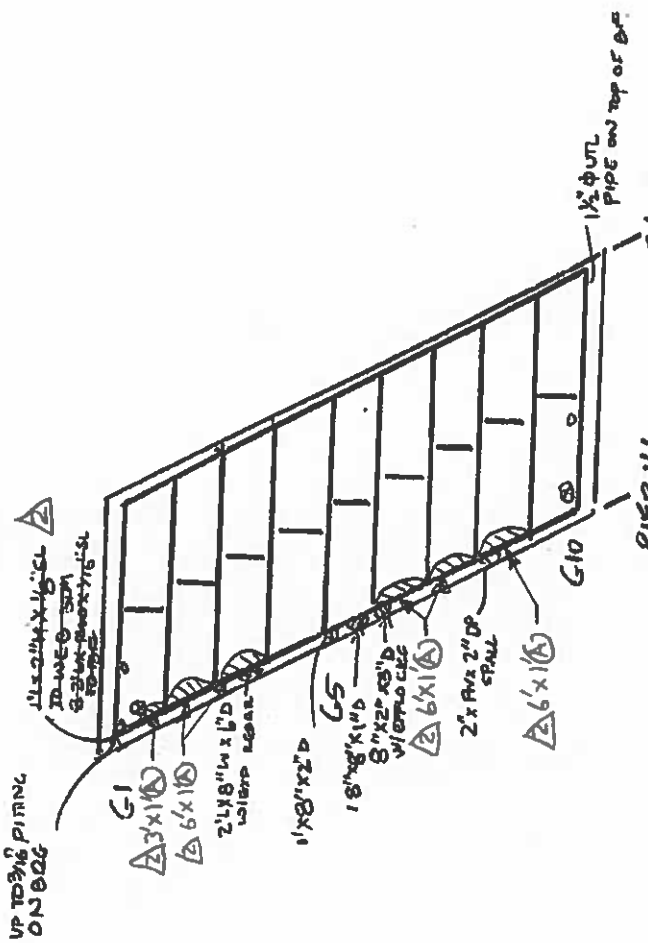

GENERAL NOTES
- SEE SPAN A GENERAL NOTES.
- FIXED BEARINGS @ PIER, REMOVE UP TO ¼" RUST BETWEEN SOLE & MASONRY PLATES
- GIRDERS HAVE UP TO 50% OF AREA W/PEELING PAINT. EXPOSED STEEL HAS LT RUST & PITTING (ESP @ GIRDER ENDS)
↑ PAINTED OVER, RE RUSTING ⚠

⊤ BOTTOM FLANGE COVER PLATE END CHECKED 100% HANDS ON
O - PVC WEEP
⊗ - SCUPPER

LEGEND
- HOLLOW AREA
- SHALLOW REBAR
- SPALL AREA
- SPALL AREA WITH EXPOSED REBAR
- MAP CRACKS OR HAIRLINE MAP CRACKS
- HAIRLINE CRACKS (HLC) OR CRACKS (CR)
- HONEY COMB AREA
- SCALE AREA (HVY, MED, OR LT)

FRAMING PLAN SPAN O

⚠ SEE DETAIL SHEETS FOR MORE INFORMATION

Revision	Date	Crew	Company	Revision	Date	Crew	Company
1	9/10/12	PKG, AKC	GI12				
2	6/23/14 & 7/3/14	RFP, PHH	DEW				

Dewberry
59 Elm Street, Suite 101
New Haven, CT 06510

FIELD NOTES	JOB NO.	BRIDGE NO: 03014 A
	DATE: 7/3/2014	SHEET OF
	CREW: RFP, PHH	

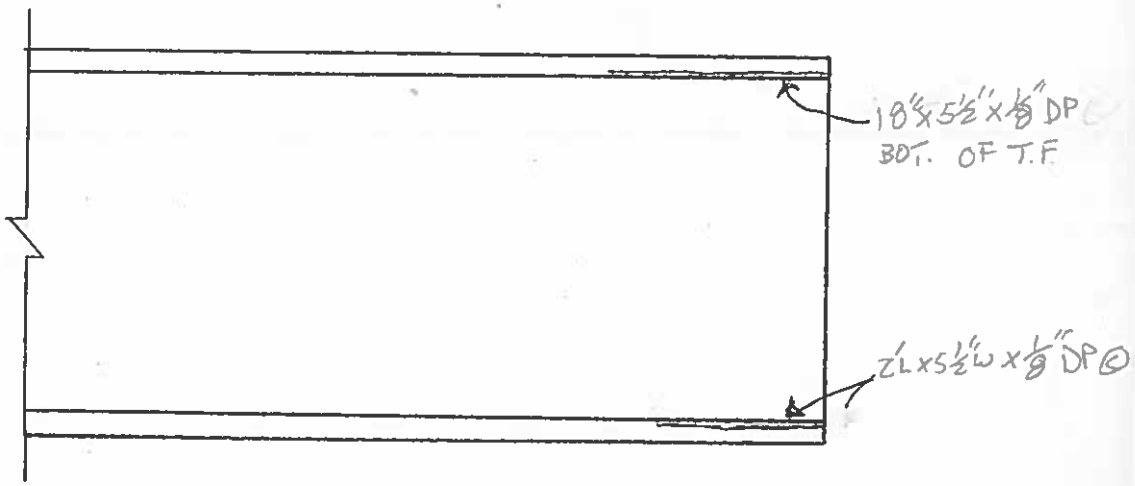

SPAN O, BEAM O-1
WEST ELEV. AT PIER 14

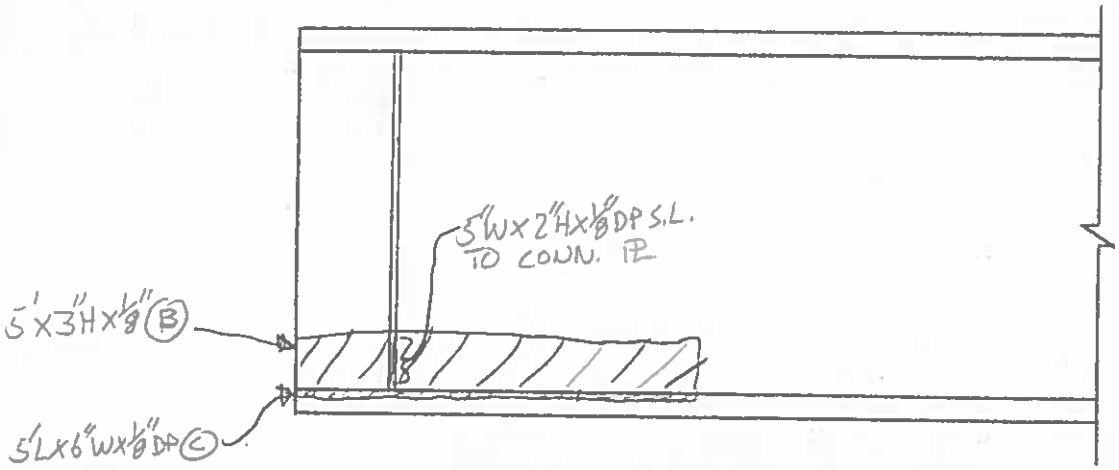

SPAN O, BEAM O-1
EAST ELEV. AT PIER 14

REVISION 1	DATE	CREW	COMPANY	REVISION 3	DATE	CREW	COMPANY
REVISION 2	DATE	CREW	COMPANY	REVISION 4	DATE	CREW	COMPANY

Dewberry
59 Elm Street, Suite 101
New Haven, CT 06510

FIELD NOTES	JOB NO.	BRIDGE NO: 03014 A
	DATE: 7/31/2014	SHEET OF
	CREW: RFP, PHH	

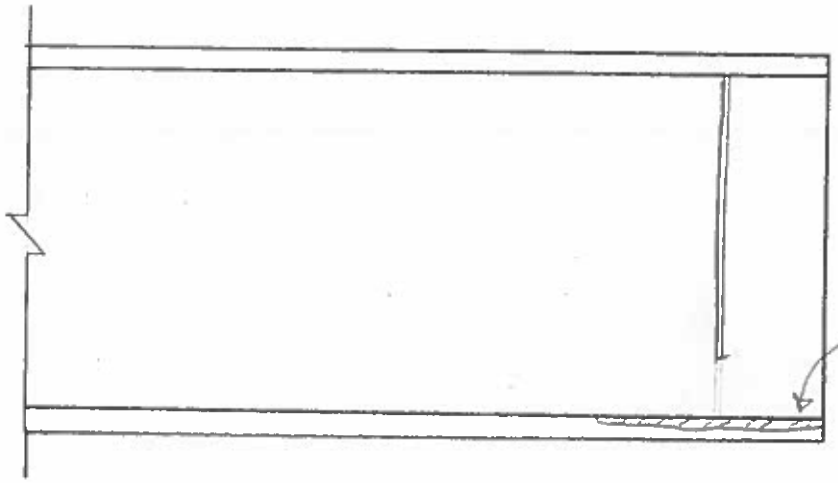

SPAN 0, BEAM 0-2
WEST ELEV. AT PIER 14

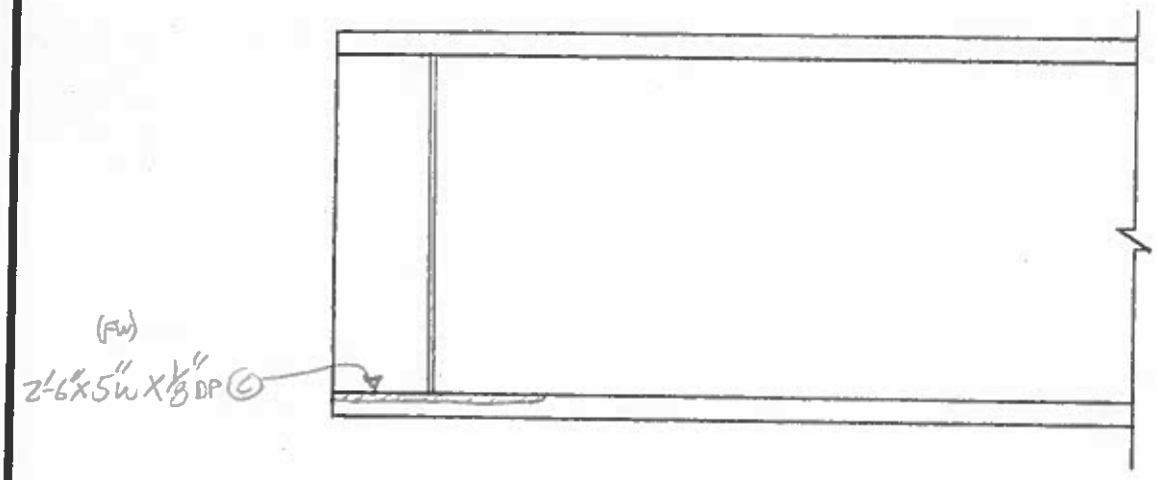

SPAN 0, BEAM 0-2
EAST ELEV. AT PIER 14

REVISION 1 DATE	CREW	COMPANY	REVISION 3 DATE	CREW	COMPANY
REVISION 2 DATE	CREW	COMPANY	REVISION 4 DATE	CREW	COMPANY

Dewberry
59 Elm Street, Suite 101
New Haven, CT 06510

FIELD NOTES

JOB NO.

BRIDGE NO: 03014 A

DATE: 7/3/2014

SHEET OF

CREW: RFP, PHH

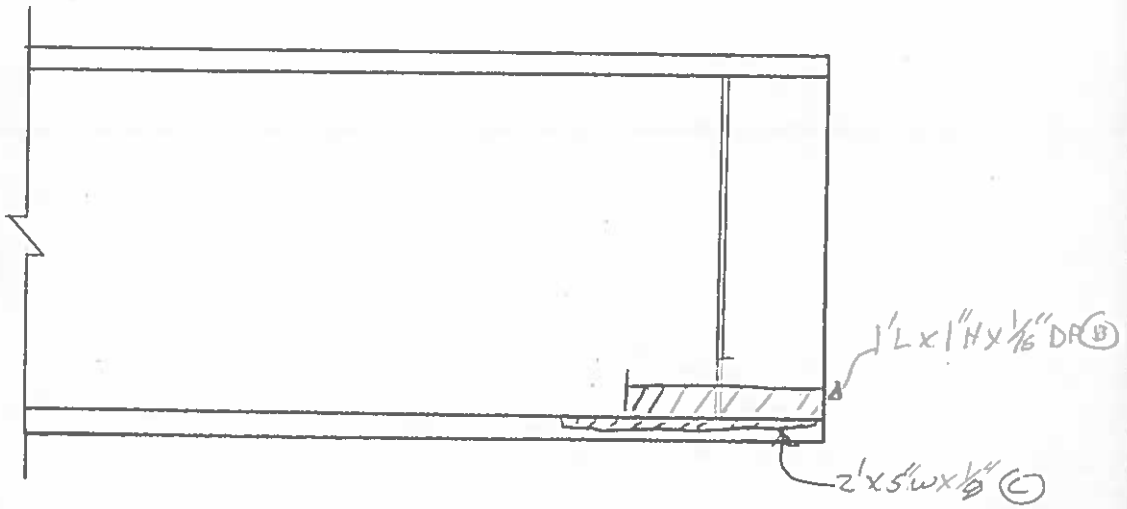

SPAN O, BEAM O-3
WEST ELEV. AT PIER 14

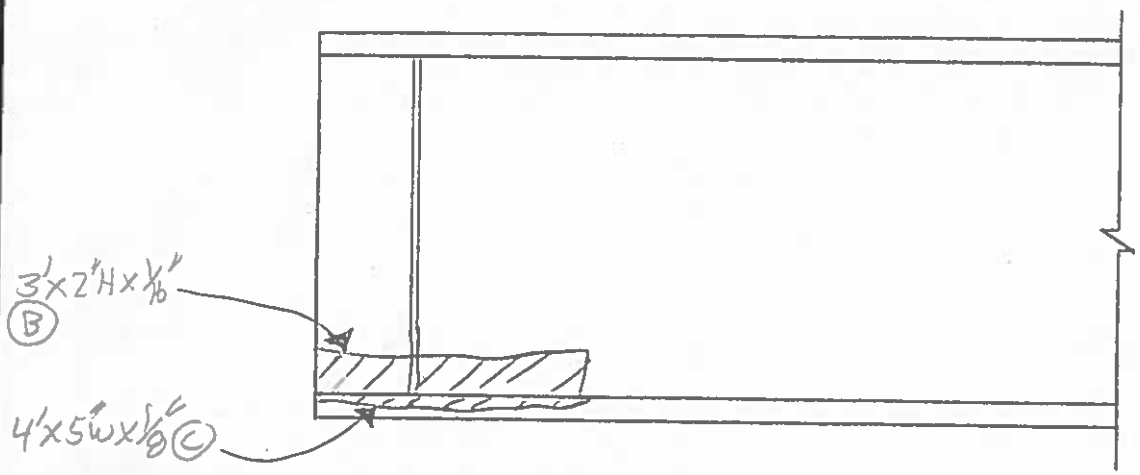

SPAN O, BEAM O-3
EAST ELEV. AT PIER 14

REVISION	DATE	CREW	COMPANY	REVISION	DATE	CREW	COMPANY
1				3			
2				4			

Dewberry
59 Elm Street, Suite 101
New Haven, CT 06510

FIELD NOTES

JOB NO.

BRIDGE NO: 03014 A

DATE: 7/3/2014

SHEET OF

CREW: RFP, PHH

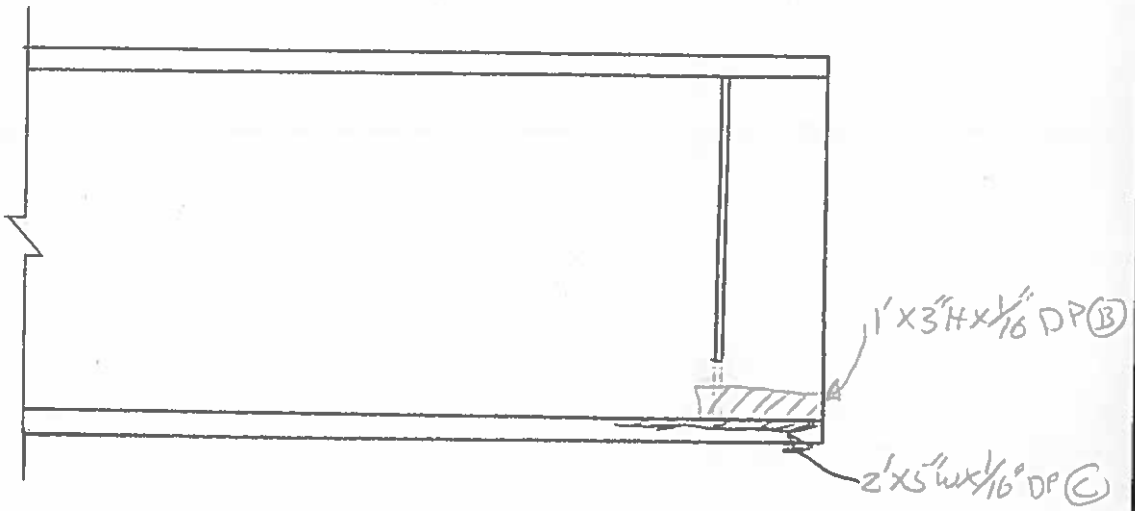

SPAN O, BEAM O-4
WEST ELEV. AT PIER 14

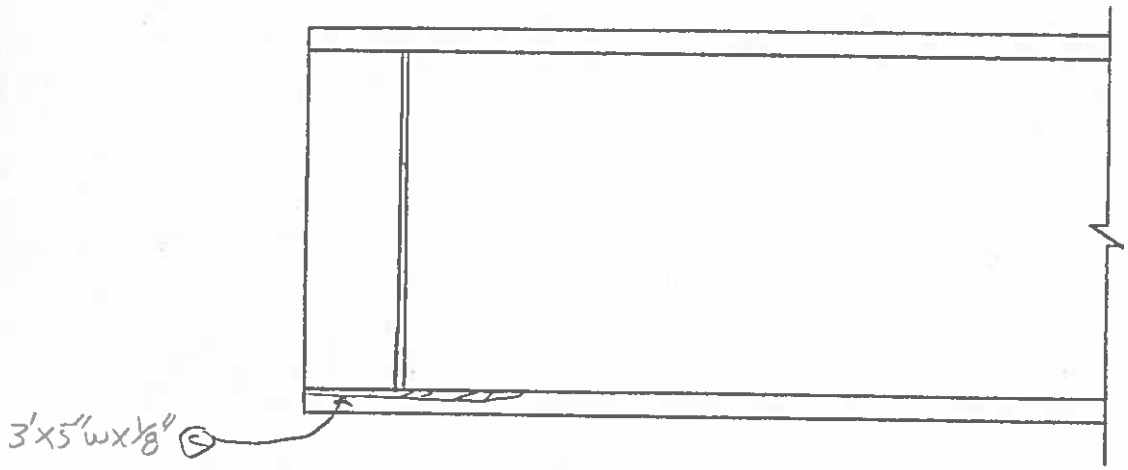

SPAN O, BEAM O-4
EAST ELEV. AT PIER 14

REVISION	DATE	CREW	COMPANY	REVISION	DATE	CREW	COMPANY
1				3			
2				4			

Dewberry	FIELD NOTES	JOB NO.	BRIDGE NO: 03014A
59 Elm Street, Suite 101 New Haven, CT 06510		DATE: 7/3/2014	SHEET OF
		CREW: RFP, PHH	

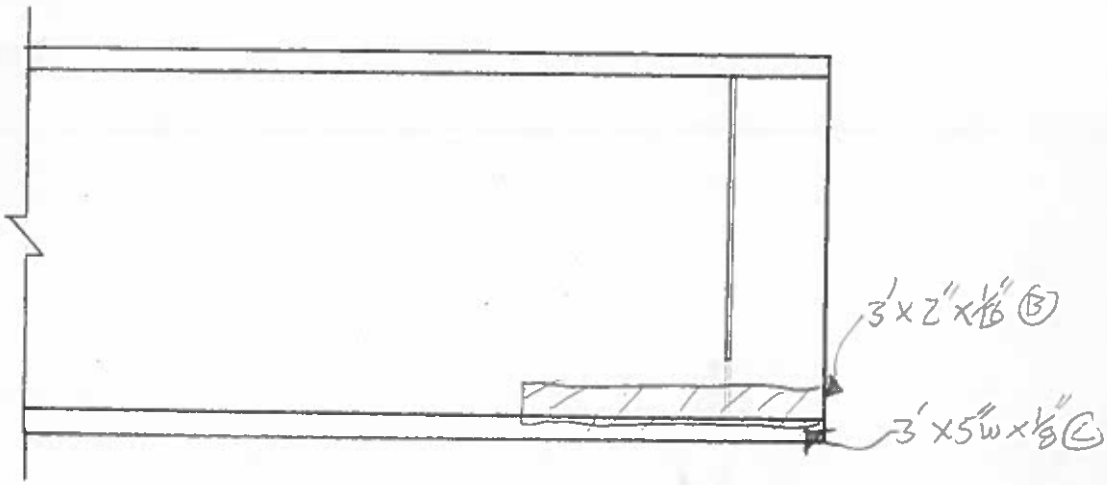

SPAN 0, BEAM 0-5
WEST ELEV. AT PIER 14

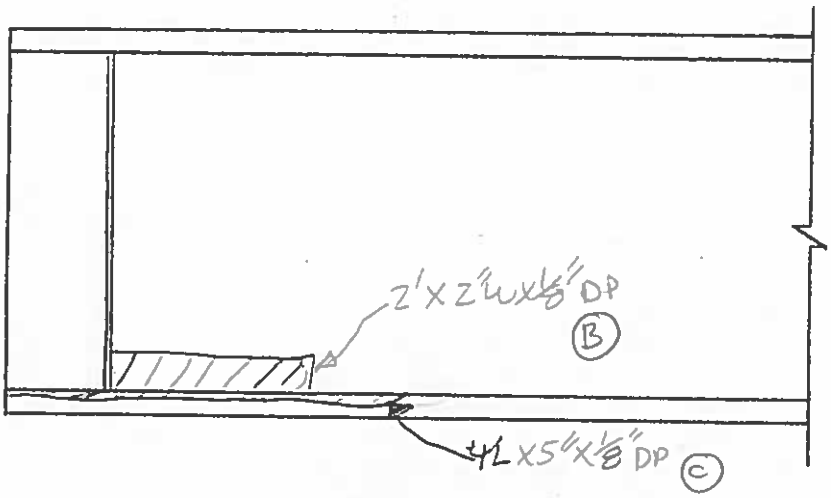

SPAN 0, BEAM 0-5
EAST ELEV. AT PIER 14

REVISION 1	DATE	CREW	COMPANY	REVISION 3	DATE	CREW	COMPANY
REVISION 2	DATE	CREW	COMPANY	REVISION 4	DATE	CREW	COMPANY

Dewberry
59 Elm Street, Suite 101
New Haven, CT 06510

FIELD NOTES	JOB NO.	BRIDGE NO: 03014A
	DATE: 7/3/2014	SHEET OF
	CREW: RFP, PHH	

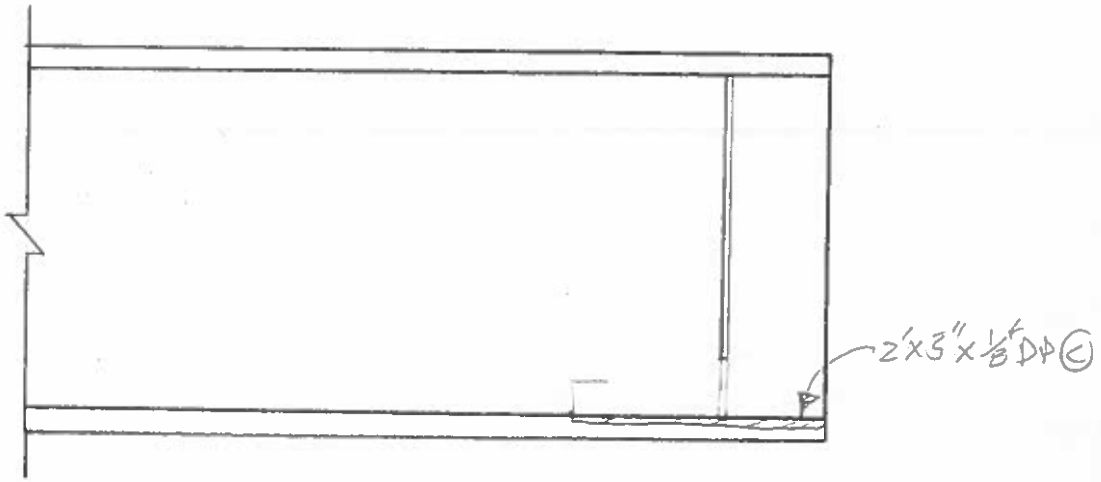

SPAN O, BEAM O-6
WEST ELEV. AT PIER 14

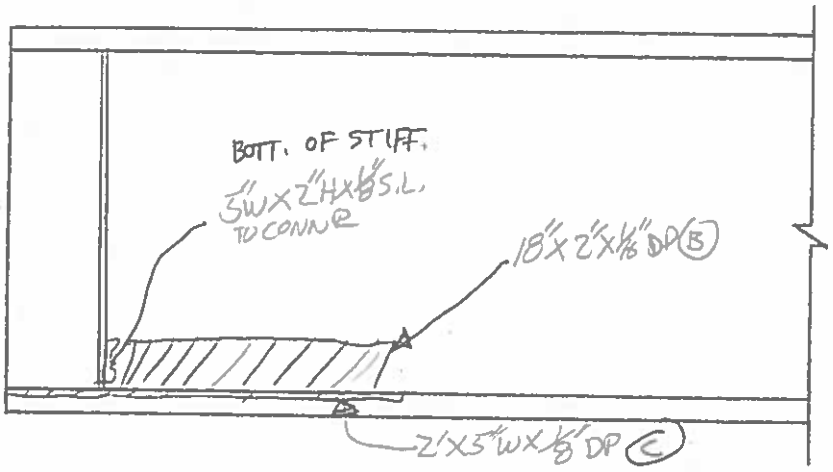

SPAN O, BEAM O-6
EAST ELEV. AT PIER 14

REVISION 1	DATE	CREW	COMPANY	REVISION 3	DATE	CREW	COMPANY
REVISION 2	DATE	CREW	COMPANY	REVISION 4	DATE	CREW	COMPANY

Dewberry
59 Elm Street, Suite 101
New Haven, CT 06510

FIELD NOTES

JOB NO.

BRIDGE NO: 03014A

DATE: 7/3/2014

SHEET OF

CREW: RFP, PHH

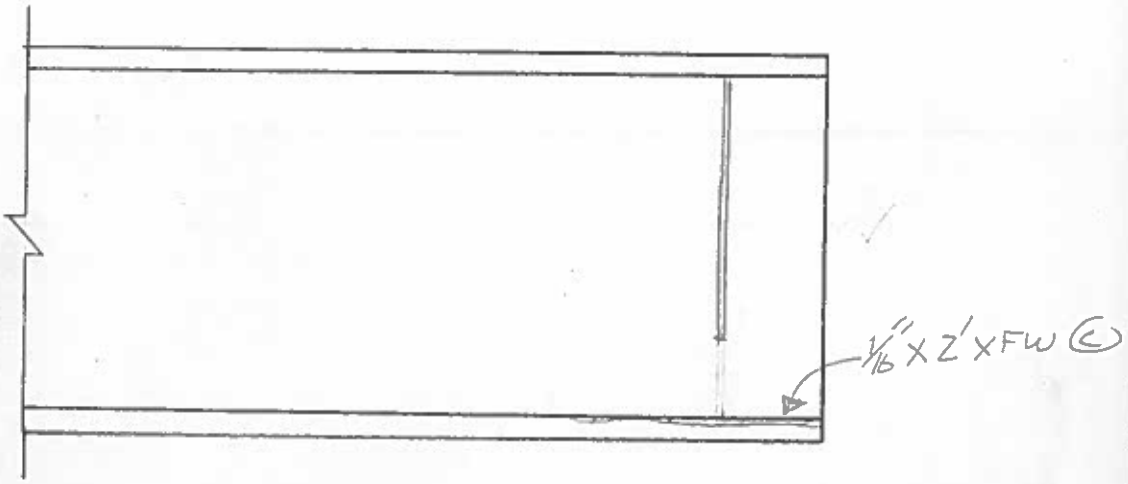

SPAN O, BEAM O-7
WEST ELEV. AT PIER 14

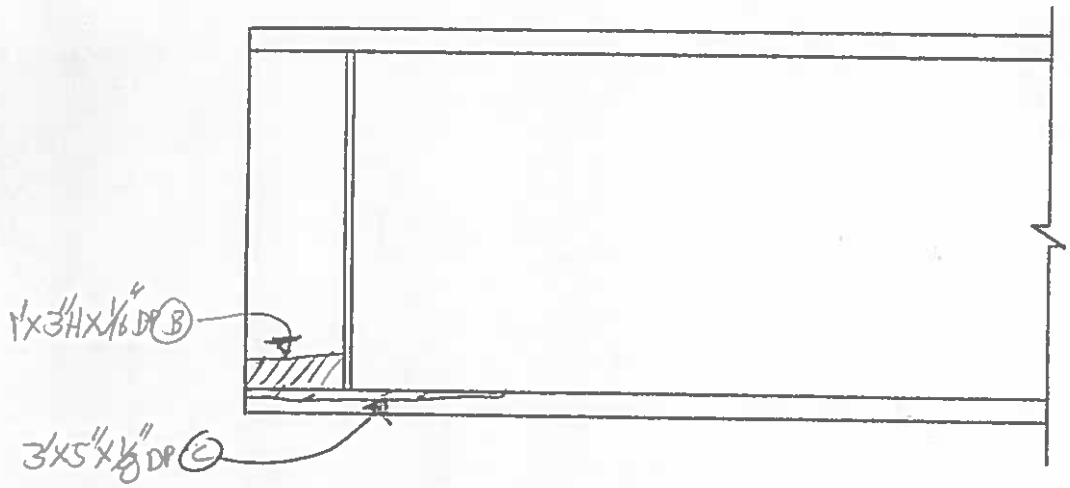

SPAN O, BEAM O-7
EAST ELEV. AT PIER 14

REVISION	DATE	CREW	COMPANY	REVISION	DATE	CREW	COMPANY
1				3			
2				4			

Dewberry	FIELD NOTES	JOB NO.	BRIDGE NO: 03014A
59 Elm Street, Suite 101 New Haven, CT 06510		DATE: 7/3/2014	SHEET OF
		CREW: RFP, PHH	

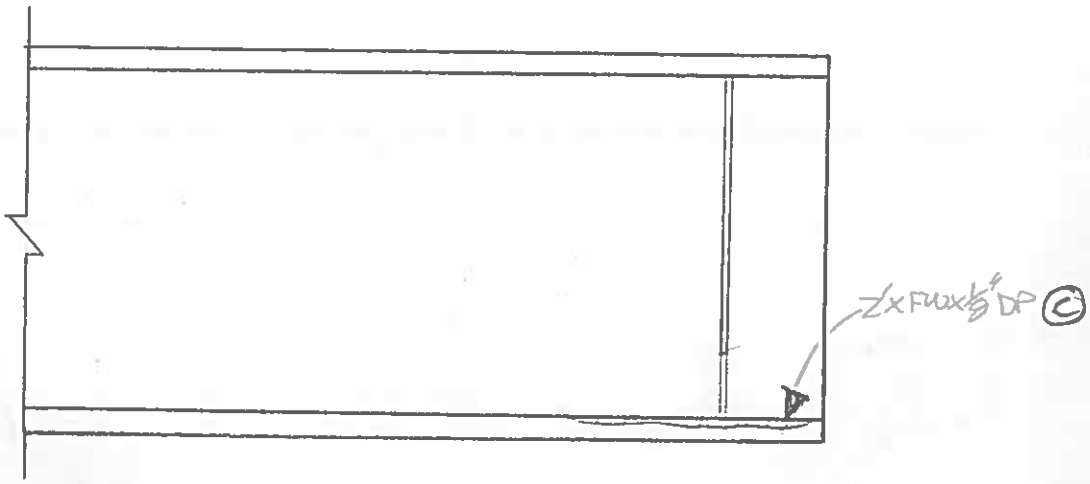

SPAN 0, BEAM 0-8
WEST ELEV. AT PIER 14

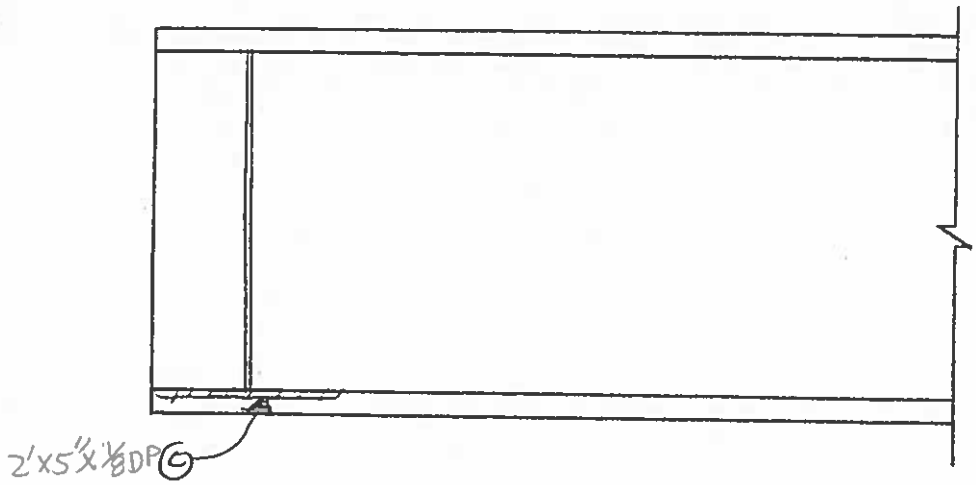

SPAN 0, BEAM 0-8
EAST ELEV. AT PIER 14

REVISION 1	DATE	CREW	COMPANY	REVISION 3	DATE	CREW	COMPANY
REVISION 2	DATE	CREW	COMPANY	REVISION 4	DATE	CREW	COMPANY

Dewberry
59 Elm Street, Suite 101
New Haven, CT 06510

FIELD NOTES

JOB NO.

BRIDGE NO: 03014 A

DATE: 7/31/2014

SHEET OF

CREW: RFP, PHH

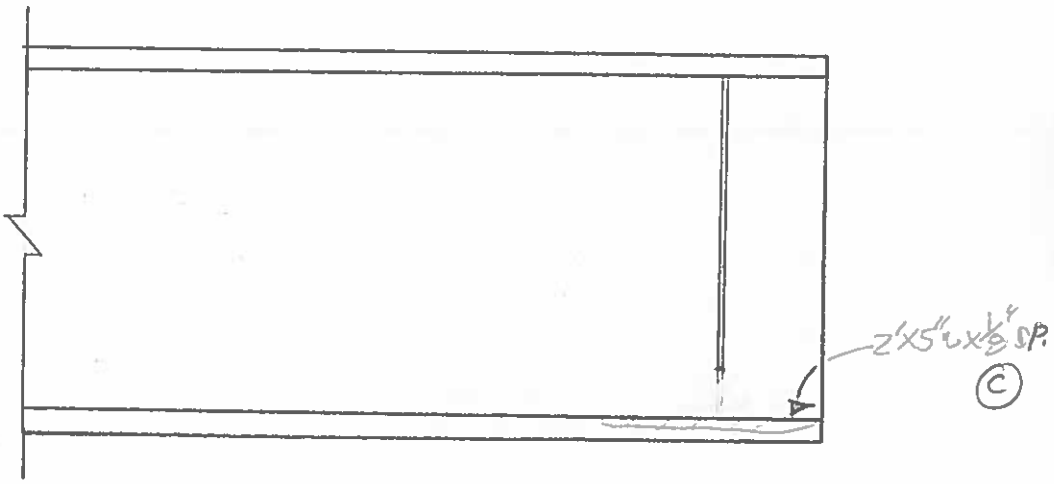

SPAN O, BEAM O-9
WEST ELEV. AT PIER 14

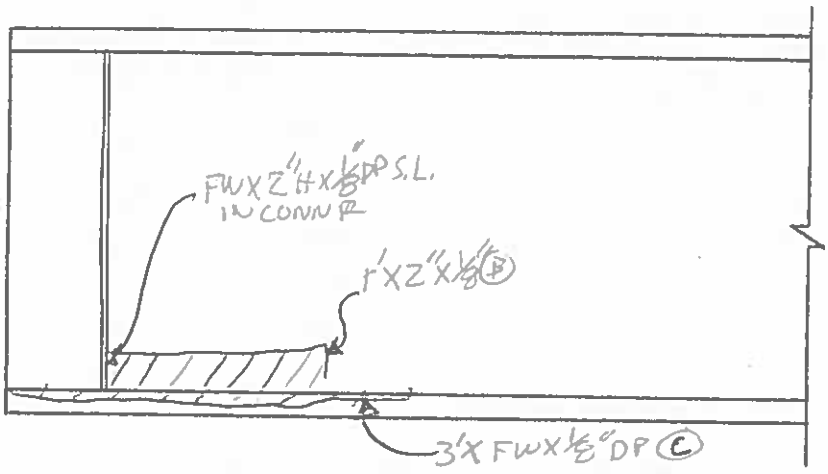

SPAN O, BEAM O-9
EAST ELEV. AT PIER 14

REVISION	DATE	CREW	COMPANY	REVISION	DATE	CREW	COMPANY
1				3			
2				4			

Dewberry	FIELD NOTES	JOB NO.	BRIDGE NO: 03014 A
59 Elm Street, Suite 101 New Haven, CT 06510		DATE: 7/3/2014	SHEET OF
		CREW: RFP, PHH	

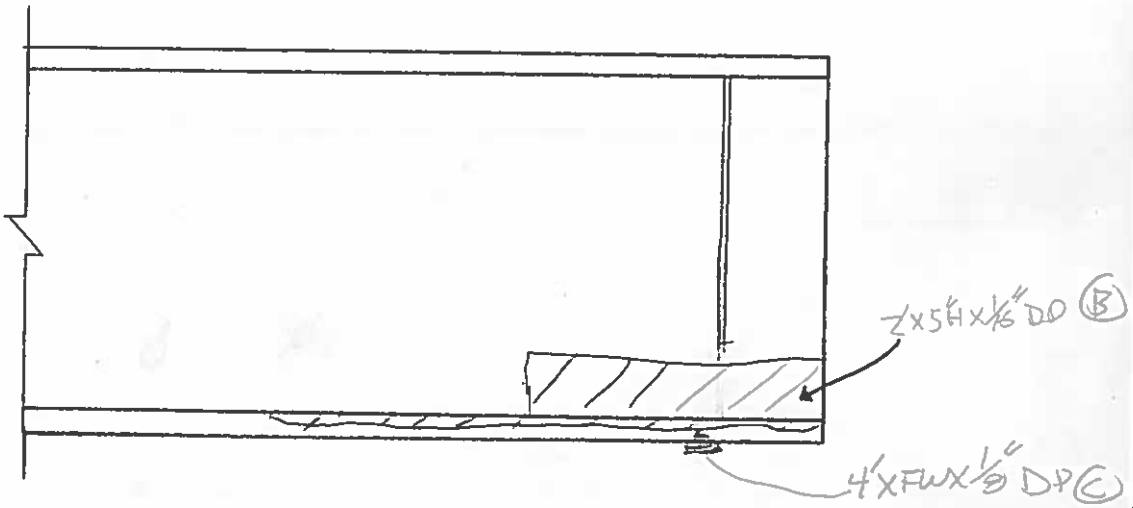

SPAN O, BEAM O-10
WEST ELEV. AT PIER 14

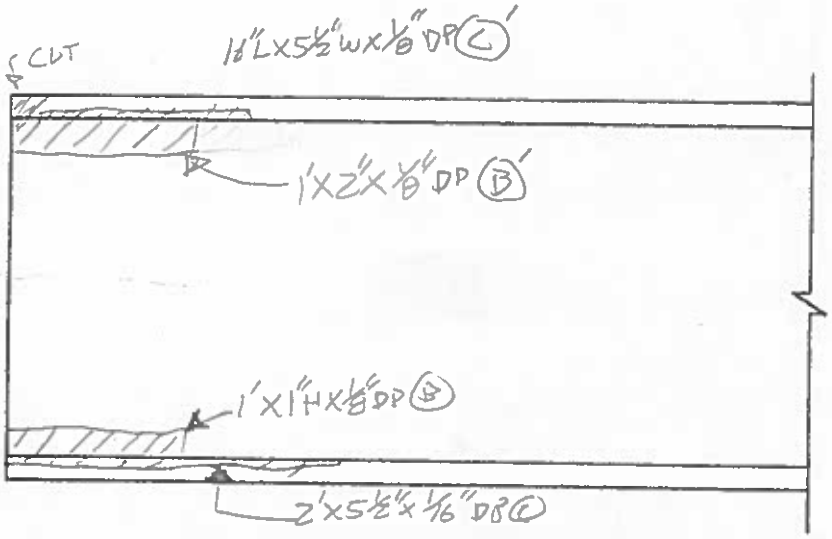

SPAN O, BEAM O-10
EAST ELEV. AT PIER 14

REVISION 1	DATE	CREW	COMPANY	REVISION 3	DATE	CREW	COMPANY
REVISION 2	DATE	CREW	COMPANY	REVISION 4	DATE	CREW	COMPANY

Dewberry®	FIELD NOTES	JOB NO.	BRIDGE NO: 03014A
59 Elm Street, Suite 101 New Haven, CT 06510		DATE: 6/23/2014	SHEET OF
		CREW: RFP, PHH	

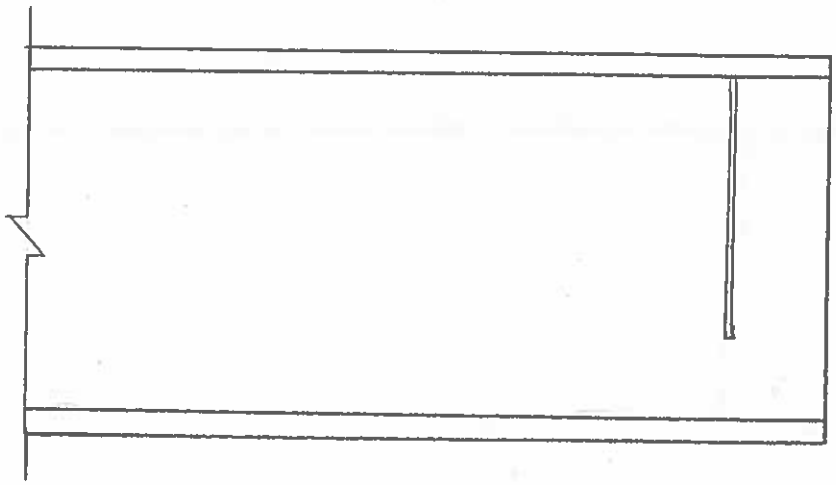

SPAN O, BEAM O-1
EAST ELEV. AT NORTH ABUT.

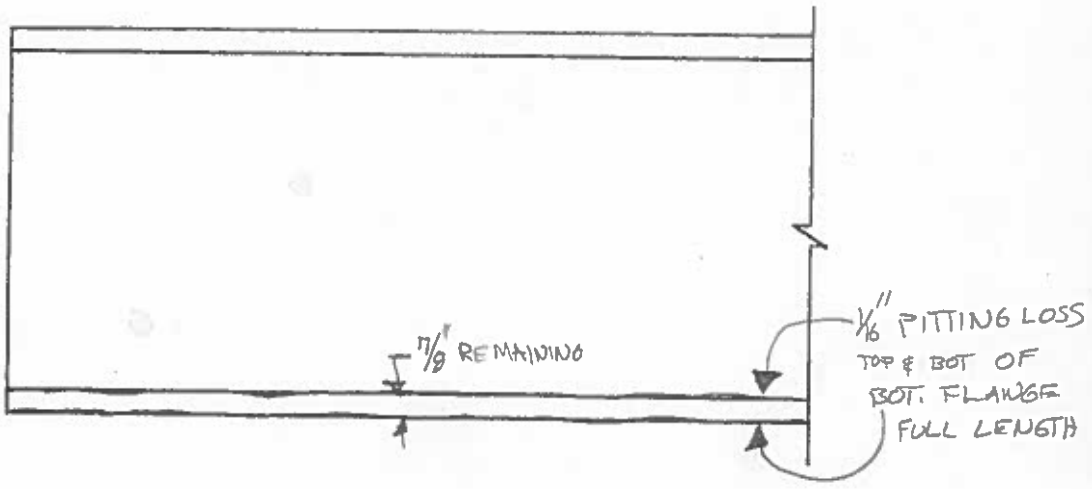

SPAN O, BEAM O-1
WEST ELEV. AT NORTH ABUT.

REVISION 1	DATE	CREW	COMPANY	REVISION 3	DATE	CREW	COMPANY
REVISION 2	DATE	CREW	COMPANY	REVISION 4	DATE	CREW	COMPANY

Dewberry
59 Elm Street, Suite 101
New Haven, CT 06510

FIELD NOTES

JOB NO.

BRIDGE NO: 03014 A

DATE: 6/23/2014

SHEET OF

CREW: RFP, PHH

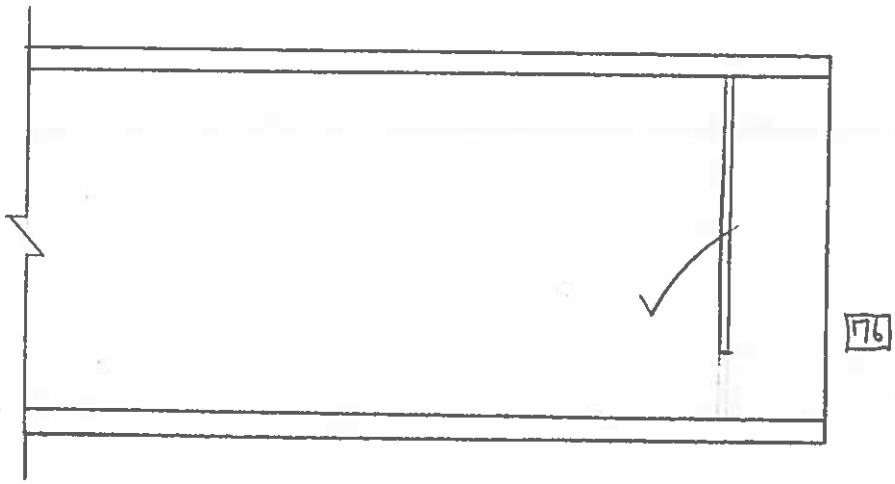

SPAN 0, BEAM 0-2
EAST ELEV. AT NORTH ABUT.

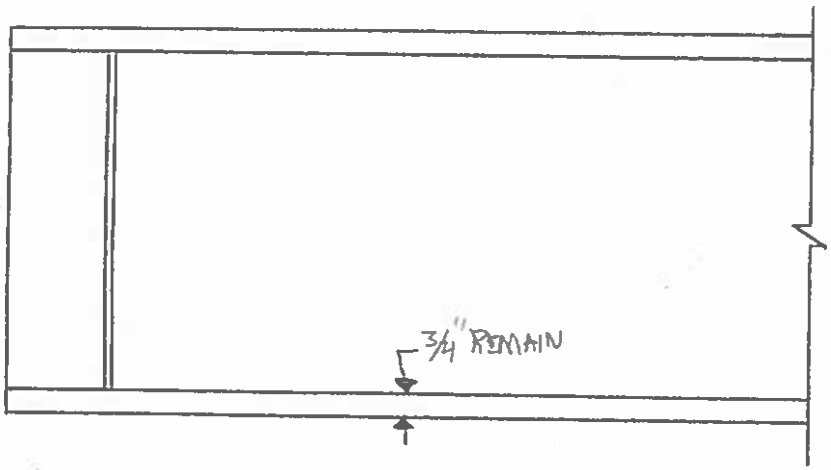

SPAN 0, BEAM 0-2
WEST ELEV. AT NORTH ABUT.

REVISION	DATE	CREW	COMPANY	REVISION	DATE	CREW	COMPANY
1				3			
2				4			

Dewberry® 59 Elm Street, Suite 101 New Haven, CT 06510	FIELD NOTES	JOB NO.	BRIDGE NO: 03014A
		DATE: 6/23/2014	SHEET OF
		CREW: RFP, PHH	

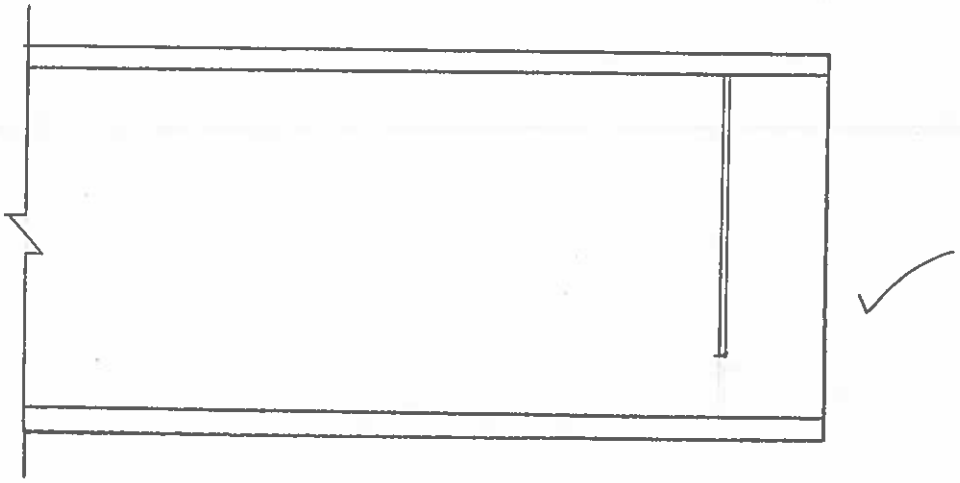

SPAN 0, BEAM 0-3
EAST ELEV. AT NORTH ABUT.

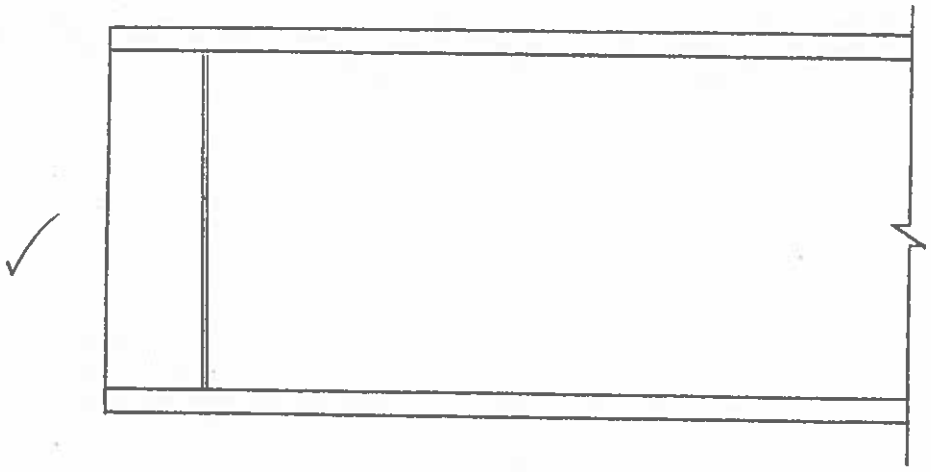

SPAN 0, BEAM 0-3
WEST ELEV. AT NORTH ABUT.

REVISION 1 DATE	CREW	COMPANY	REVISION 3 DATE	CREW	COMPANY
REVISION 2 DATE	CREW	COMPANY	REVISION 4 DATE	CREW	COMPANY

Dewberry®	FIELD NOTES	JOB NO.	BRIDGE NO: 03014 A
59 Elm Street, Suite 101 New Haven, CT 06510		DATE: 6/23/2014	SHEET OF
		CREW: RFP, PHH	

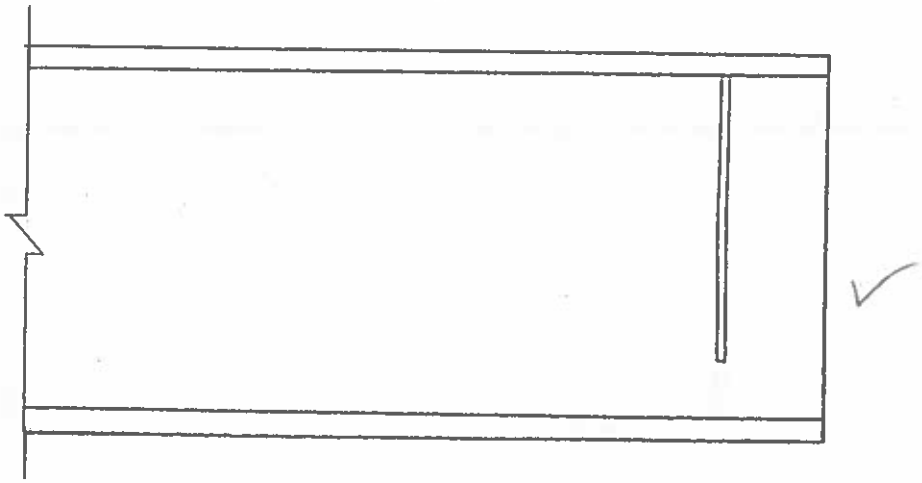

SPAN O, BEAM O-4
EAST ELEV. AT NORTH ABUT.

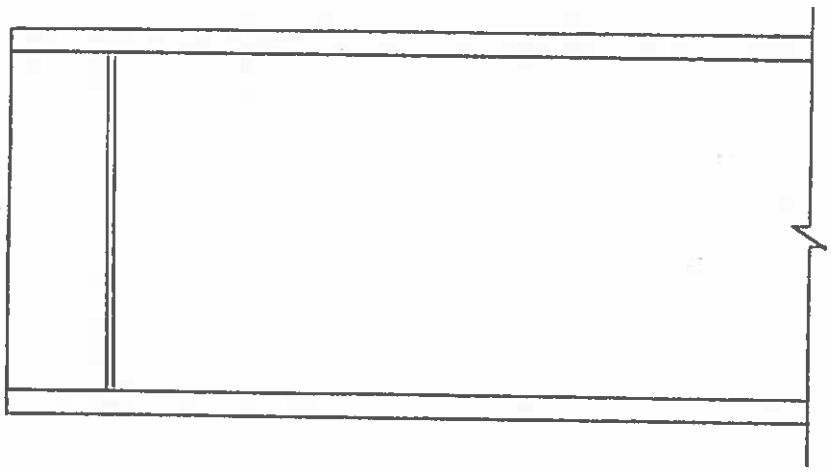

SPAN O, BEAM O-4
WEST ELEV. AT NORTH ABUT.

REVISION	DATE	CREW	COMPANY	REVISION	DATE	CREW	COMPANY
1				3			
2				4			

Dewberry
59 Elm Street, Suite 101
New Haven, CT 06510

FIELD NOTES

JOB NO.

BRIDGE NO: 03014 A

DATE: 6/23/2014

SHEET OF

CREW: RFP, PHH

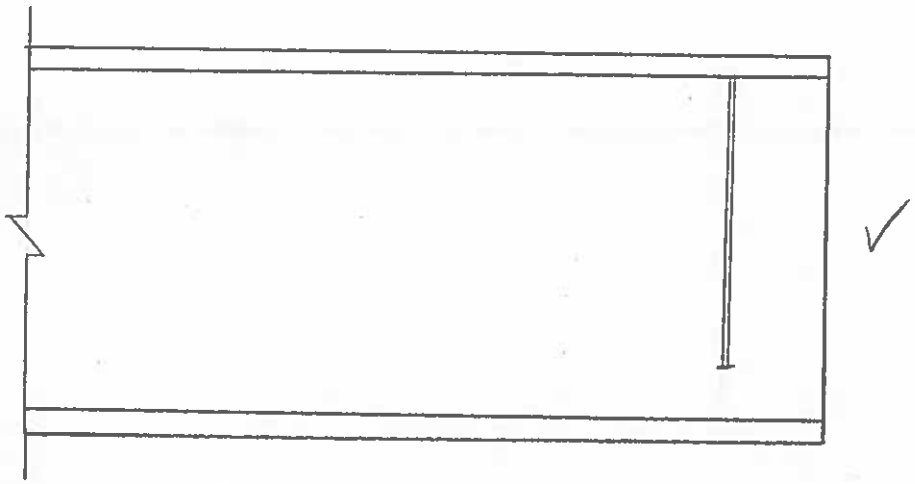

SPAN 0, BEAM 0-5
EAST ELEV. AT NORTH ABUT.

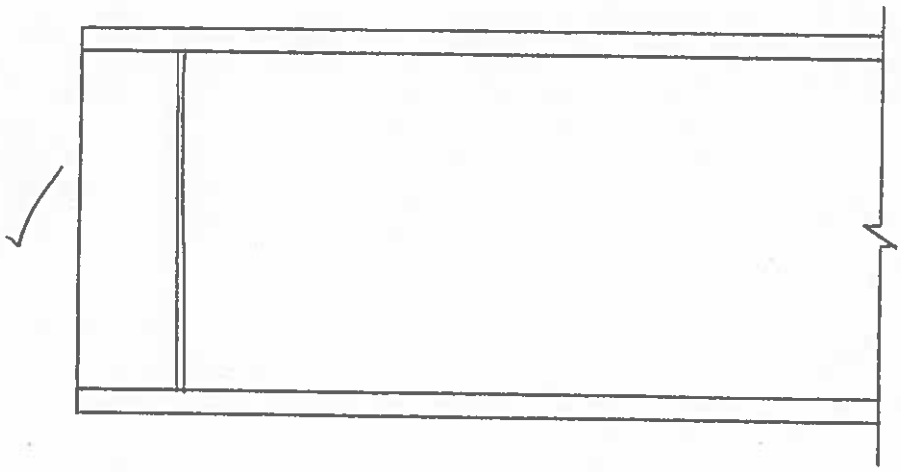

SPAN 0, BEAM 0-5
WEST ELEV. AT NORTH ABUT.

REVISION	DATE	CREW	COMPANY	REVISION	DATE	CREW	COMPANY
1				3			
2				4			

Dewberry®	FIELD NOTES	JOB NO.	BRIDGE NO: 03014A
59 Elm Street, Suite 101 New Haven, CT 06510		DATE: 6/23/2014	SHEET OF
		CREW: RFP, PHH	

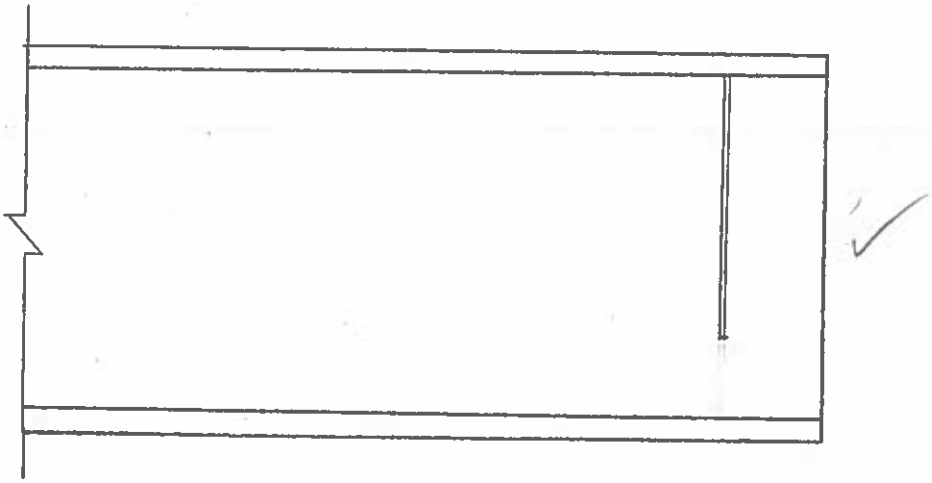

SPAN 0, BEAM 0-6
EAST ELEV. AT NORTH ABUT.

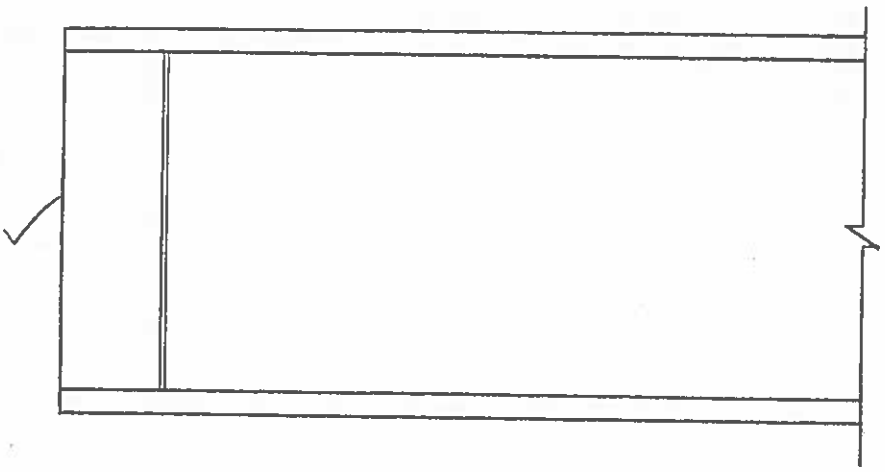

SPAN 0, BEAM 0-6
WEST ELEV. AT NORTH ABUT.

REVISION	DATE	CREW	COMPANY	REVISION	DATE	CREW	COMPANY
1				3			
2				4			

Dewberry
59 Elm Street, Suite 101
New Haven, CT 06510

FIELD NOTES

JOB NO.

BRIDGE NO: 03014 A

DATE: 6/23/2014

SHEET OF

CREW: RFP, PHH

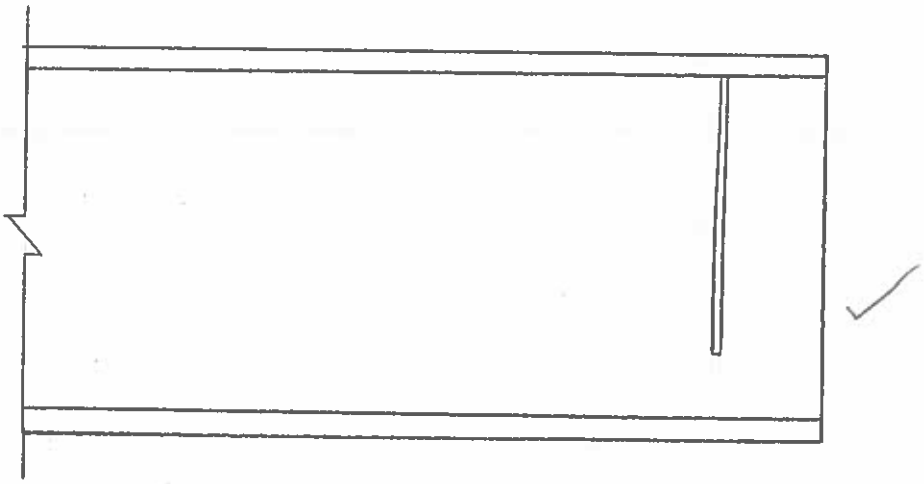

SPAN 0, BEAM 0-7
EAST ELEV. AT NORTH ABUT.

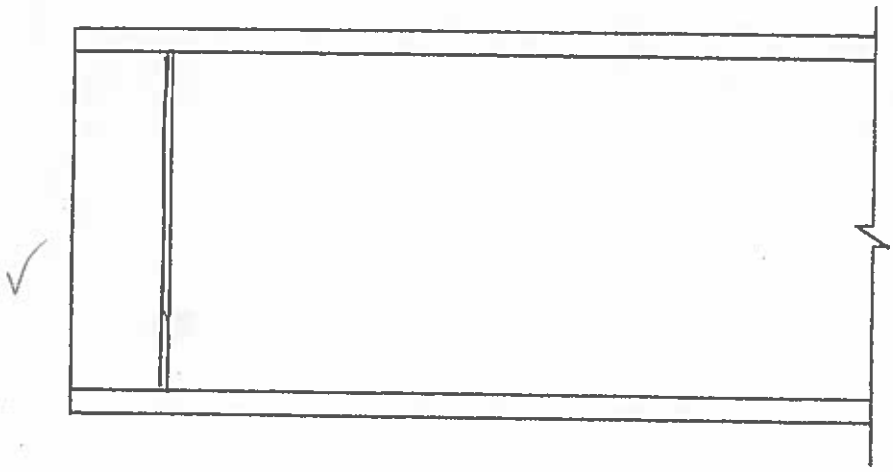

SPAN 0, BEAM 0-7
WEST ELEV. AT NORTH ABUT

REVISION	DATE	CREW	COMPANY	REVISION	DATE	CREW	COMPANY
1				3			
2				4			

Dewberry	FIELD NOTES	JOB NO.	BRIDGE NO: 03014A
59 Elm Street, Suite 101 New Haven, CT 06510		DATE: 6/23/2014	SHEET OF
		CREW: RFP, PHH	

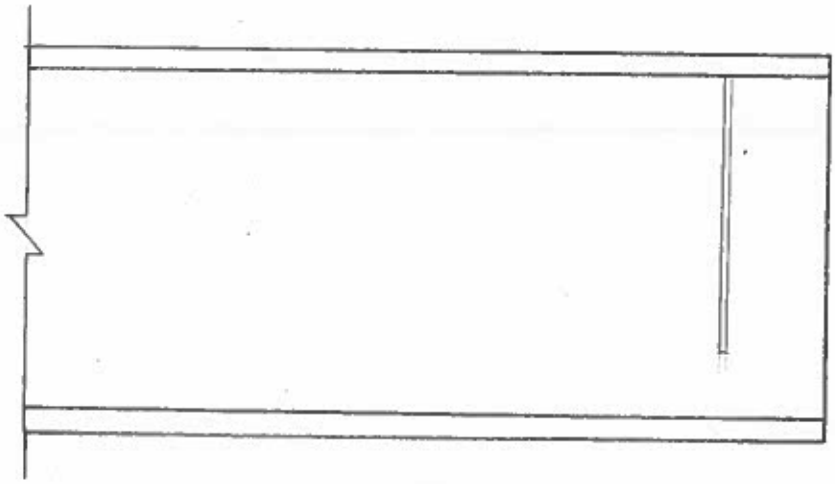

SPAN 0, BEAM 0-8
EAST ELEV. AT NORTH ABUT.

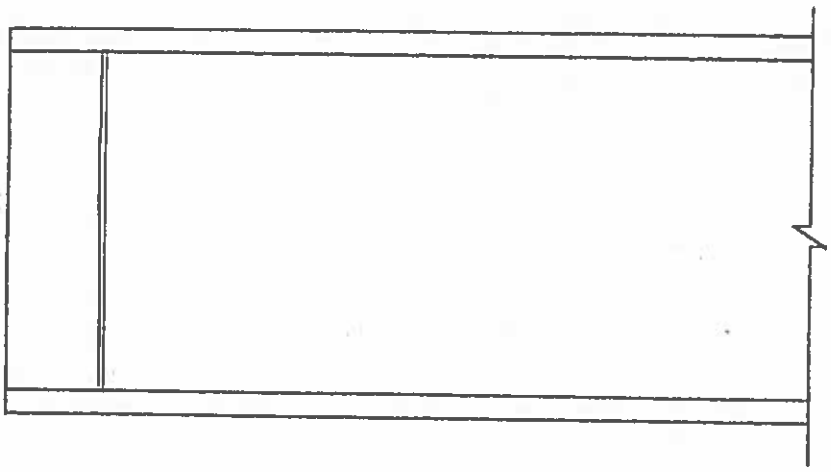

SPAN 0, BEAM 0-8
WEST ELEV. AT NORTH ABUT.

REVISION 1 DATE	CREW	COMPANY	REVISION 3 DATE	CREW	COMPANY
REVISION 2 DATE	CREW	COMPANY	REVISION 4 DATE	CREW	COMPANY

Dewberry
59 Elm Street, Suite 101
New Haven, CT 06510

FIELD NOTES

JOB NO.

BRIDGE NO: 03014A

DATE: 6/23/2014

SHEET OF

CREW: RFP, PHH

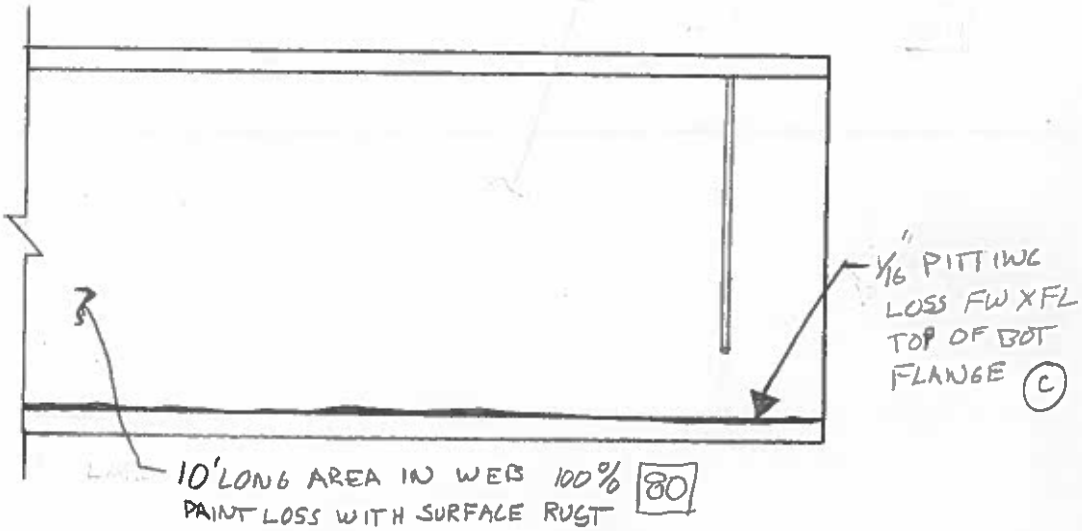

SPAN O, BEAM O-9
EAST ELEV. AT NORTH ABUT.

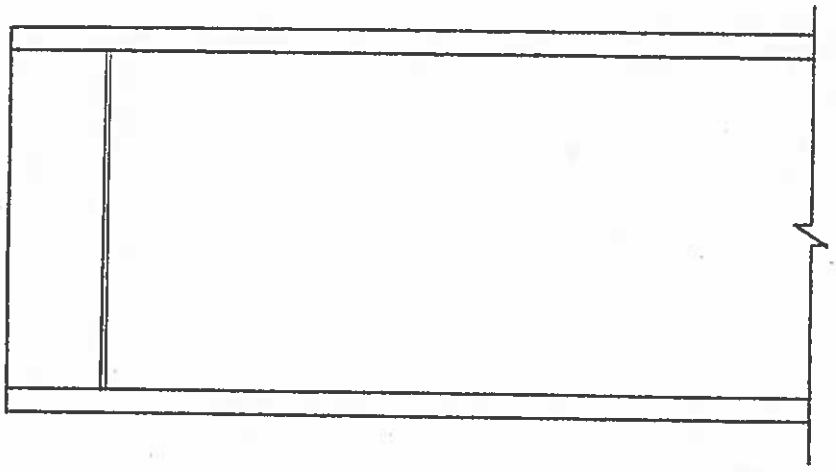

SPAN O, BEAM O-9
WEST ELEV. AT NORTH ABUT.

REVISION	DATE	CREW	COMPANY	REVISION	DATE	CREW	COMPANY
1				3			
2				4			

Dewberry
59 Elm Street, Suite 101
New Haven, CT 06510

FIELD NOTES

JOB NO.

BRIDGE NO: 03014A

DATE: 6/23/2014

SHEET OF

CREW: RFP, PHH

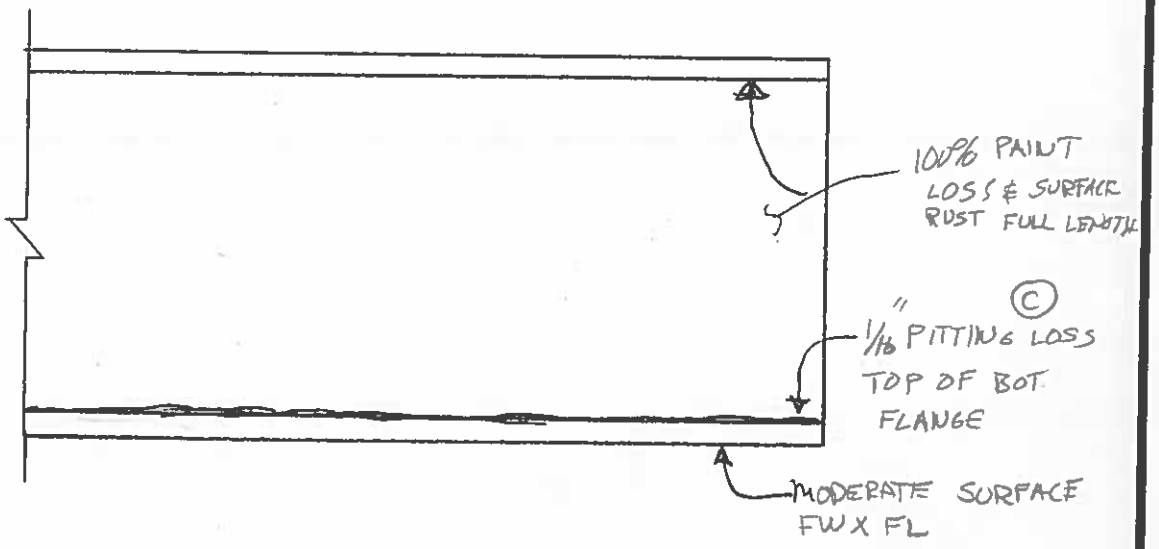

179

SPAN O, BEAM O-10
EAST ELEV. AT NORTH ABUT.

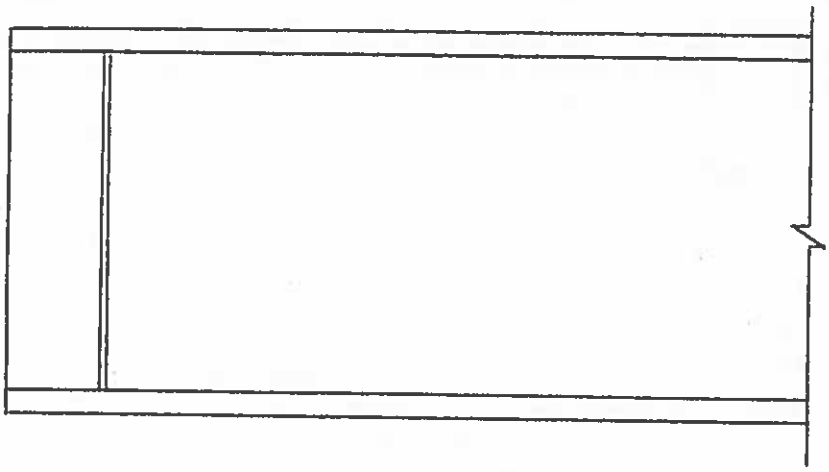

SPAN O, BEAM O-10
WEST ELEV. AT NORTH ABUT.

REVISION	DATE	CREW	COMPANY	REVISION	DATE	CREW	COMPANY
1				3			
2				4			

Dewberry	FIELD NOTES	JOB NO.	BRIDGE NO: 03014A
59 Elm Street, Suite 101 New Haven, CT 06510		DATE: 7/3/2014	SHEET OF
		CREW: RFP, PHH	

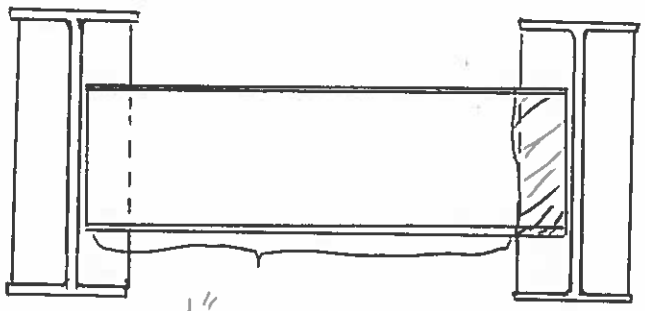

1/16 DP FITTING TO BOT. BF FULL WIDTH TYPICAL BAYS 1-4

6"L X 1/16 DP LOSS ON TOP + BOT. LEG + WEB OF CHANNEL

BAY 1 P14 BTWN

END

SPAN 0 , ~~INTERMEDIATE~~ DIAPHRAGM

REVISION 1	DATE	CREW	COMPANY	REVISION 3	DATE	CREW	COMPANY
REVISION 2	DATE	CREW	COMPANY	REVISION 4	DATE	CREW	COMPANY

Dewberry® 59 Elm Street, Suite 101 New Haven, CT 06510	FIELD NOTES	JOB NO.	BRIDGE NO: 03014 A
		DATE: 7/3/2014	SHEET OF
		CREW: RFP, PHH	

(FW+FL)

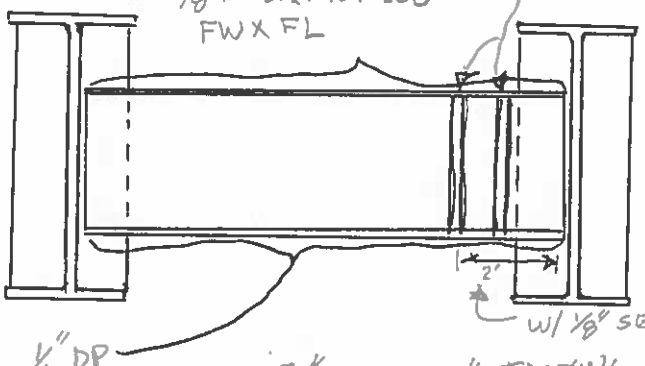

BAY 3

SPAN ○, END ~~INTERMEDIATE~~ DIAPHRAGM @ P14

REVISION 1	DATE	CREW	COMPANY	REVISION 3	DATE	CREW	COMPANY
REVISION 2	DATE	CREW	COMPANY	REVISION 4	DATE	CREW	COMPANY

Dewberry® 59 Elm Street, Suite 101 New Haven, CT 06510	FIELD NOTES	JOB NO.	BRIDGE NO: 03014A
		DATE: 9/3/2014	SHEET OF
		CREW: RFP, PHH	

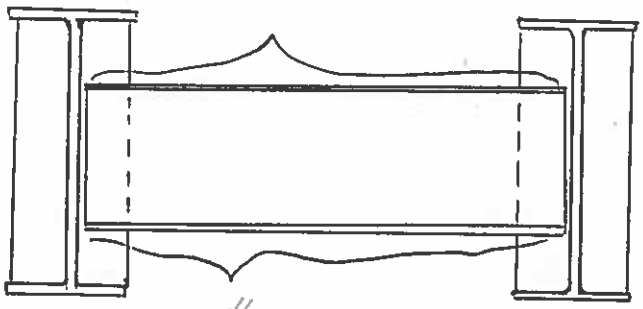

ACTIVE LEAKAGE

BAY 4 +5/6 END

SPAN 0, ~~INTERMEDIATE~~ DIAPHRAGM P14

REVISION 1	DATE	CREW	COMPANY	REVISION 3	DATE	CREW	COMPANY
REVISION 2	DATE	CREW	COMPANY	REVISION 4	DATE	CREW	COMPANY

Dewberry	FIELD NOTES	JOB NO.	BRIDGE NO: 03014 A
59 Elm Street, Suite 101 New Haven, CT 06510		DATE: 7/3/2014	SHEET OF
		CREW: RFP, PHH	

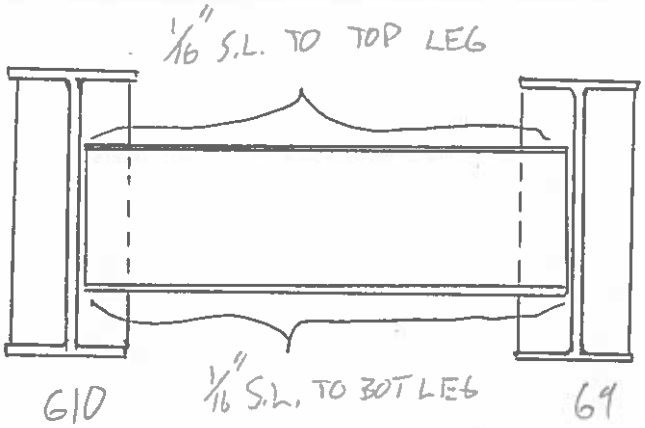

P14

SPAN 0, END ~~INTERMEDIATE~~ DIAPHRAGM

REVISION 1	DATE	CREW	COMPANY	REVISION 3	DATE	CREW	COMPANY
REVISION 2	DATE	CREW	COMPANY	REVISION 4	DATE	CREW	COMPANY

Appendix B
Substructure Field Notes

FIELD NOTES

PREPARED BY: Garg Consulting Services, Inc. (ENGINEERS • CONSULTANTS • CONSTRUCTION MANAGERS)	PROJ. NO. 170-3013	BRIDGE NO. 3014A
	DATE: 11/02/2010	SHEET 61 62
	CREW: CL, MD, SN	

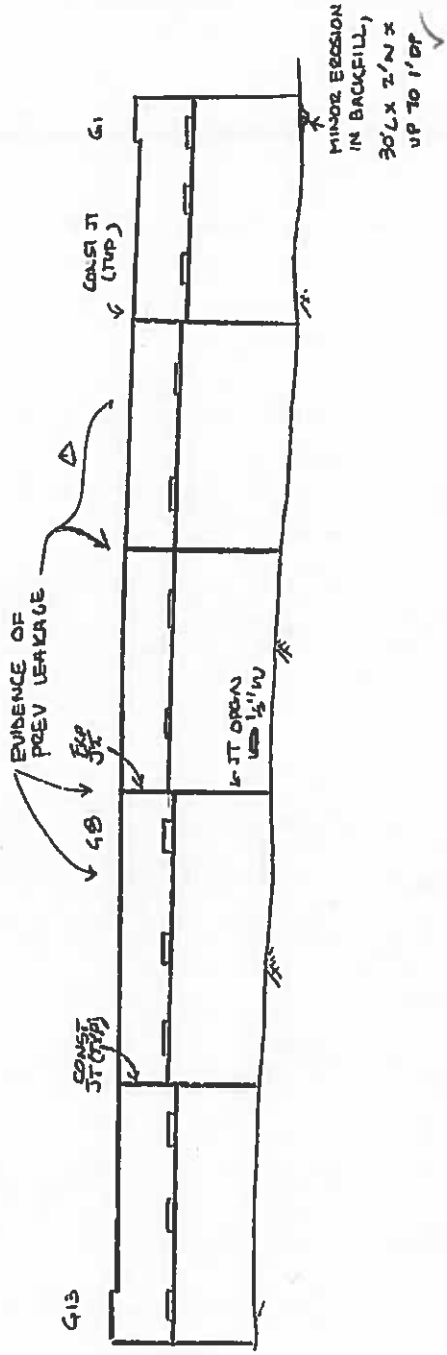

GENERAL NOTES
- RANDOM AREAS HAVE EVD OF PREV. LEAKAGE
- RANDOM MINOR POPOUTS

SOUTH ABUTMENT

LEGEND
HOLLOW AREA
SHALLOW REBAR
SPALL AREA
SPALL AREA WITH EXPOSED REBAR
MAP CRACKS OR HAIRLINE MAP CRACKS
HAIRLINE CRACKS (HLC) OR CRACKS (CR)
HONEY COMB AREA
SCALE AREA (HVY, MED, OR LT)

Revision	Date	Crew	Company	Revision	Date	Crew	Company
1	9/10/12	PICG, AKC, PKS	GTM2				
2	6/30/14	RFP, PHH	DEW				

FIELD NOTES

PREPARED BY: Garg Consulting Services, Inc.

PROJ. NO. 170-3013

DATE: 09/08/2010

CREW: PDG, MD

BRIDGE NO. 03014A

SHEET 63

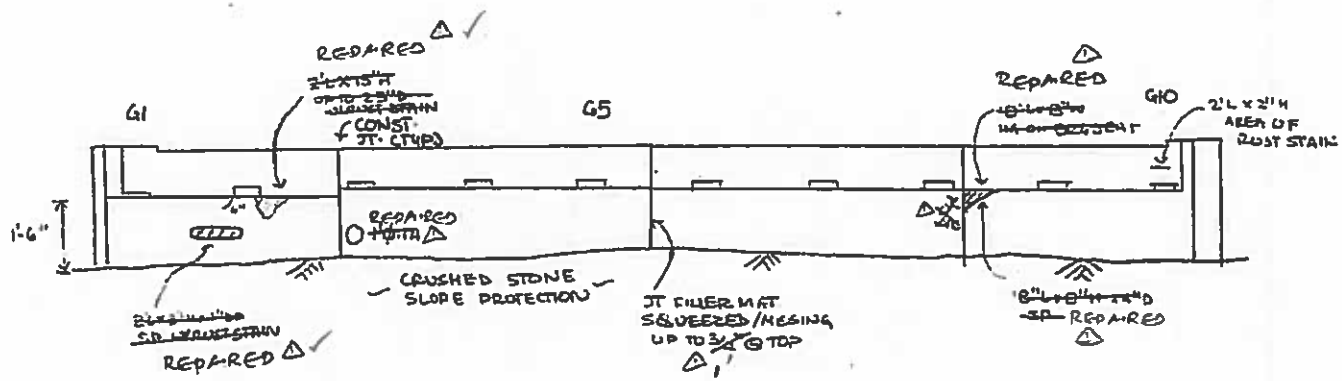

GENERAL NOTES

- RANDOM AREAS HAVE EVIDENCE OF PREVIOUS LEAKAGE
- ~~LIGHT TO MOD. DEBRIS ON BEARING SEAT AT RANDOM LOCATIONS~~ NOT FOUND

LEGEND

- HOLLOW AREA
- SHALLOW REBAR
- SPALL AREA
- SPALL AREA WITH EXPOSED REBAR
- MAP CRACKS OR HAIRLINE MAP CRACKS
- HAIRLINE CRACKS (HLC) OR CRACKS (CR)
- HONEY COMB AREA
- SCALE AREA (HVY, MED, OR LT)

NORTH ABUTMENT

Revision	Date	Crew	Company	Revision	Date	Crew	Company
2	6/23/14	RFP, PHH	DEW				

FIELD NOTES

PREPARED BY: Gary Consulting Services, Inc.	PROJ. NO. 170-3013	BRIDGE NO. 03014A
	DATE 11/02/2010	SHEET ~~65~~ 64
	CREW CL, MD, SN	

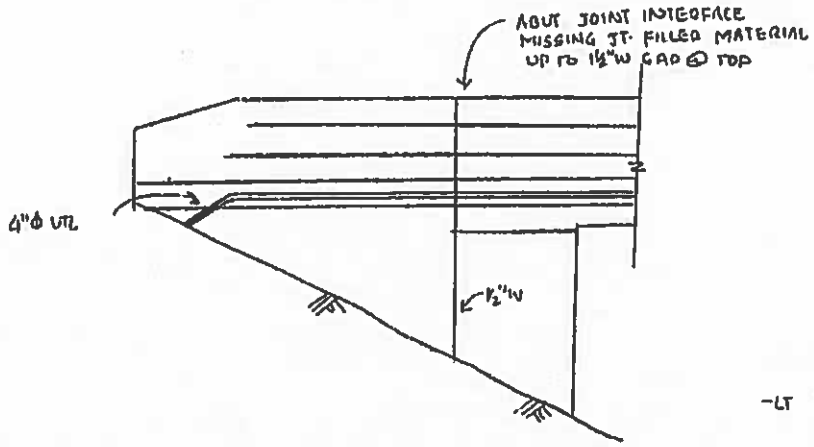

SOUTHEAST WINGWALL

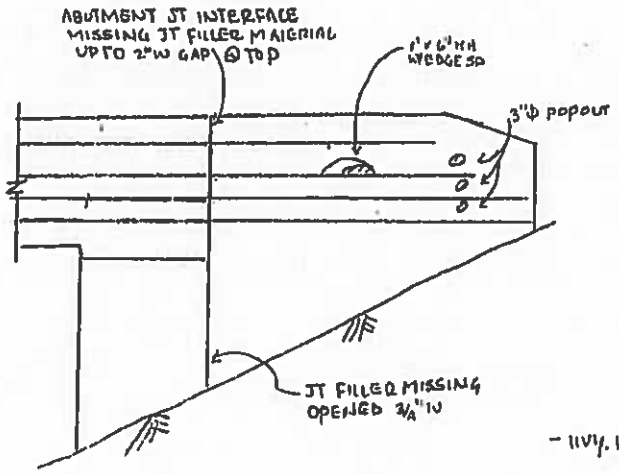

SOUTHWEST WINGWALL

LEGEND

- HOLLOW AREA
- SHALLOW REBAR
- SPALL AREA
- SPALL AREA WITH EXPOSED REBAR
- MAP CRACKS OR HAIRLINE MAP CRACKS
- HAIRLINE CRACKS (HLC) OR CRACKS (CR)
- HONEY COMB AREA
- SCALE AREA (HVY, MED, OR LT)

△- NO CHANGE

Revision	Date	Crew	Company	Revision	Date	Crew	Company
1	9/10/12	PRG, AKC, DKS	GMZ	△			
2	6/30/14	RFD, PHH	DEW	△			

FIELD NOTES

	PROJ. NO. 170-3013	BRIDGE NO. 03014A
	DATE 04108/2010	SHEET 66 65
PREPARED BY: Garg Consulting Services, Inc.	CREW PDG, MD	

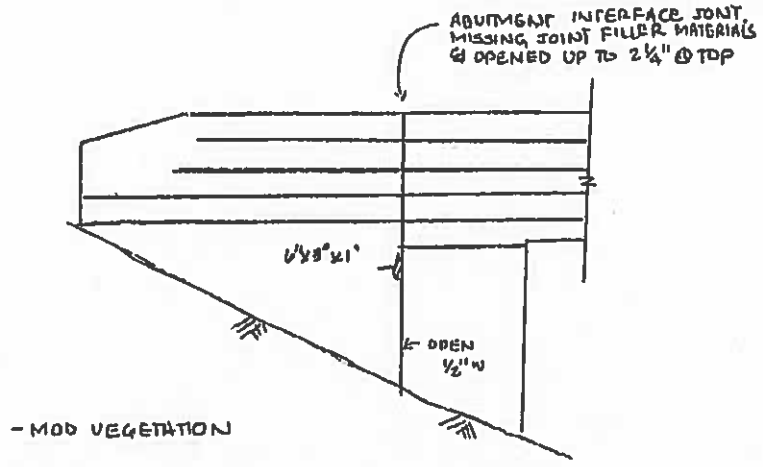

NORTHWEST WINGWALL

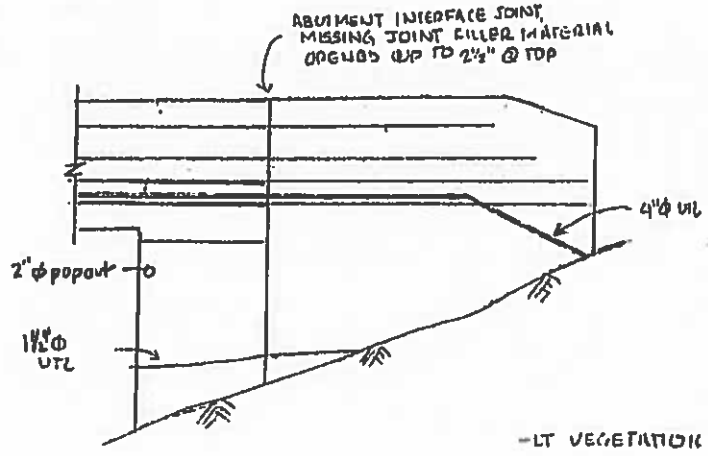

NORTHEAST WINGWALL

LEGEND

- HOLLOW AREA
- SHALLOW REBAR
- SPALL AREA
- SPALL AREA WITH EXPOSED REBAR
- MAP CRACKS OR HAIRLINE MAP CRACKS
- HAIRLINE CRACKS (HLC) OR CRACKS (CR)
- HONEY COMB AREA
- SCALE AREA (HVY, MED, OR LT)

△- NO CHANGE

Revision	Date	Crew	Company	Revision	Date	Crew	Company
1	9/10/12	PKG, AKC, PKS	GM2				
2	6/23/14	RFP, PHH	DEW				

FIELD NOTES

PREPARED BY: Garg Consulting Services, Inc.

PROJ. NO. 170-3013	BRIDGE NO. 3014A
DATE 11/02/2010	SHEET ~~67~~ 66
CREW CL, MD, SN	

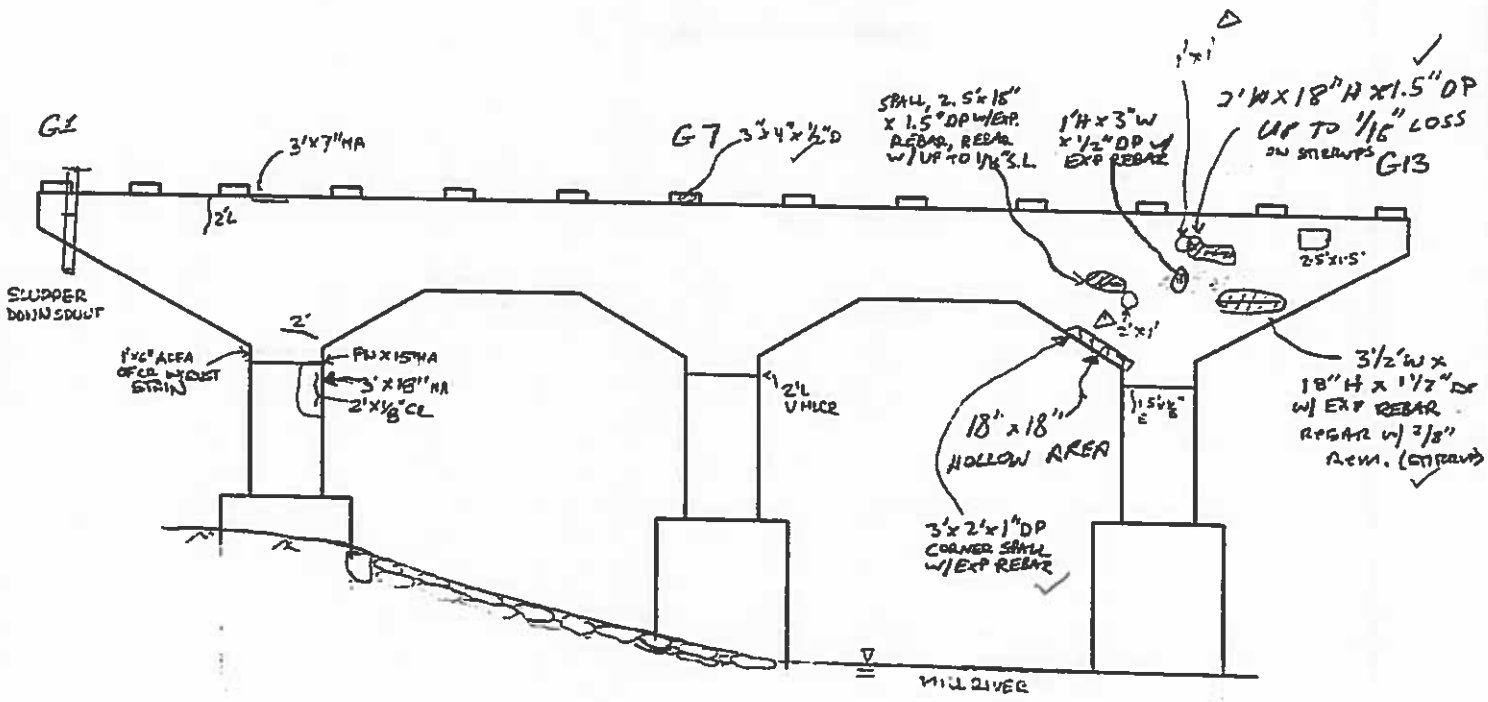

GENERAL NOTES

- RANDOM AREAS OF LT SCALE ESPECIALLY ON PIER CAP
- EVIDENCE OF JOINT LEAKAGE THROUGH DECK JOINT
- LT DEBRIS ON TOP OF THE PIER CAP
- AREAS OF MUD STAIN ON PIER CAP

LEGEND

- HOLLOW AREA
- SHALLOW REBAR
- SPALL AREA
- SPALL AREA WITH EXPOSED REBAR
- MAP CRACKS OR HAIRLINE MAP CRACKS
- HAIRLINE CRACKS (HLC) OR CRACKS (CR)
- HONEY COMB AREA
- SCALE AREA (HVY, MED, OR LT)

PIER 1 SOUTH ELEVATION

Revision	Date	Crew	Company	Revision	Date	Crew	Company
1	9/8/12	PKG, AKC	GMZ				
2	6/30/14 & 7/8/14	RFP, PHH	DEW				

FIELD NOTES

PREPARED BY: Garg Consulting Services, Inc.	PROJ. NO. 170-3013	BRIDGE NO. 3014A
	DATE 11/02/2010	SHEET ~~68~~ 67
	CREW CL, MD, SN	

Revision	Date	Crew	Company	Revision	Date	Crew	Company
1	9/8/12	PKG, AKC	GI+2				
2	6/30/14 & 7/8/14	RFD, PHH	DEW				

FIELD NOTES

PREPARED BY: Garg Consulting Services, Inc.
DESIGN • CONSTRUCT • CONSTRUCTION MANAGERS

PROJ. NO. 170-3013 | BRIDGE NO. 3014A

DATE 11/02/2010 | SHEET 6 OF 6

CREW C.L, MD, SN

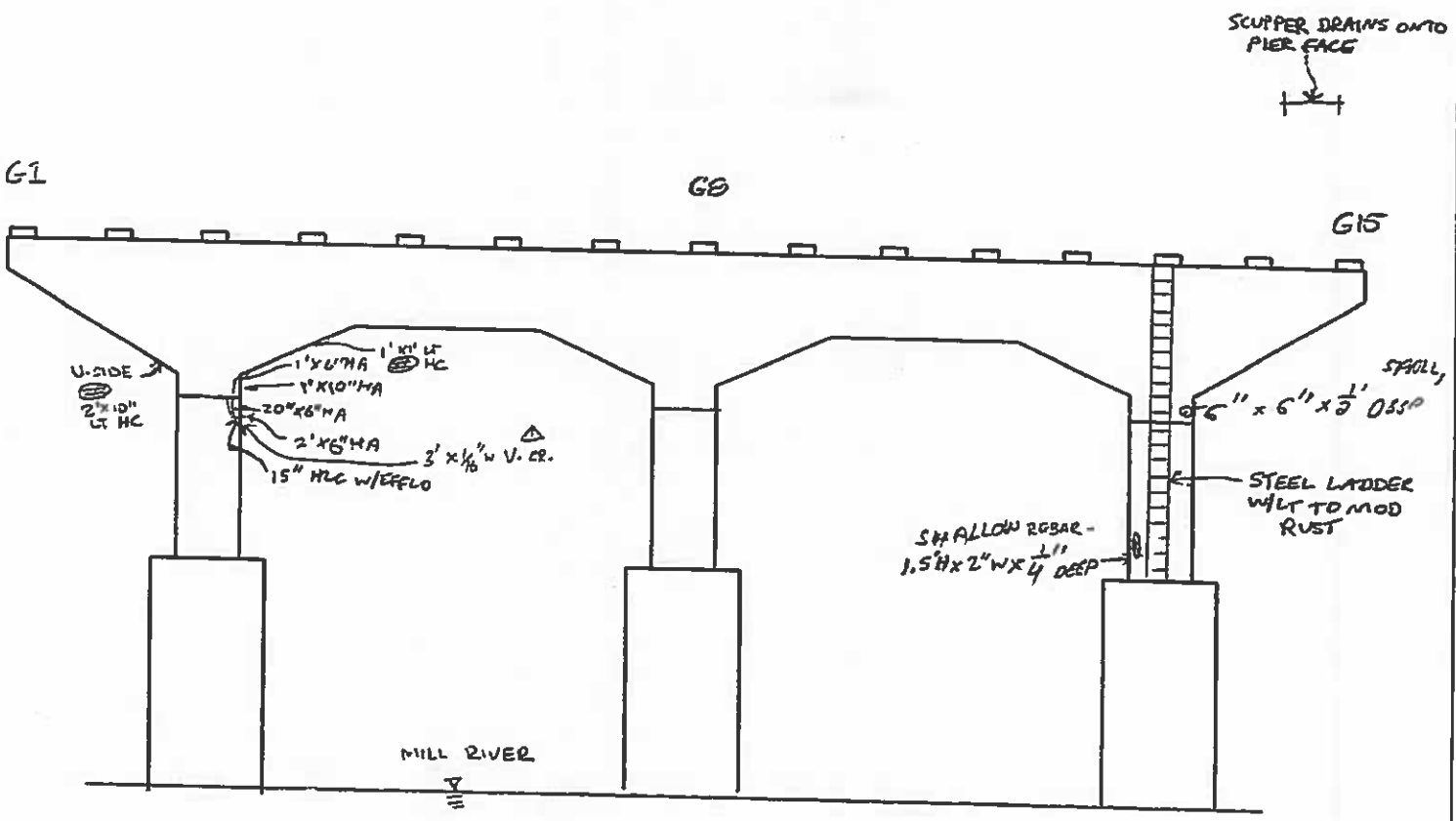

GENERAL NOTES
– SEE PIER 1, SOUTH ELEVATION

LEGEND
- HOLLOW AREA
- SHALLOW REBAR
- SPALL AREA
- SPALL AREA WITH EXPOSED REBAR
- MAP CRACKS OR HAIRLINE MAP CRACKS
- HAIRLINE CRACKS (HLC) OR CRACKS (CR)
- HONEY COMB AREA
- SCALE AREA (HVY, MED, OR LT)

PIER 2 SOUTH ELEVATION

Revision	Date	Crew	Company
2	9/8/12	PKG, AKC	GMZ
1	11/01/10	RFP, PHH	DEW

FIELD NOTES

PREPARED BY: Garg Consulting Services, Inc.

PROJ. NO. 170-3013	BRIDGE NO. 3014A
DATE 11/02/2010	SHEET 20 69
CREW CL, MD, SN	

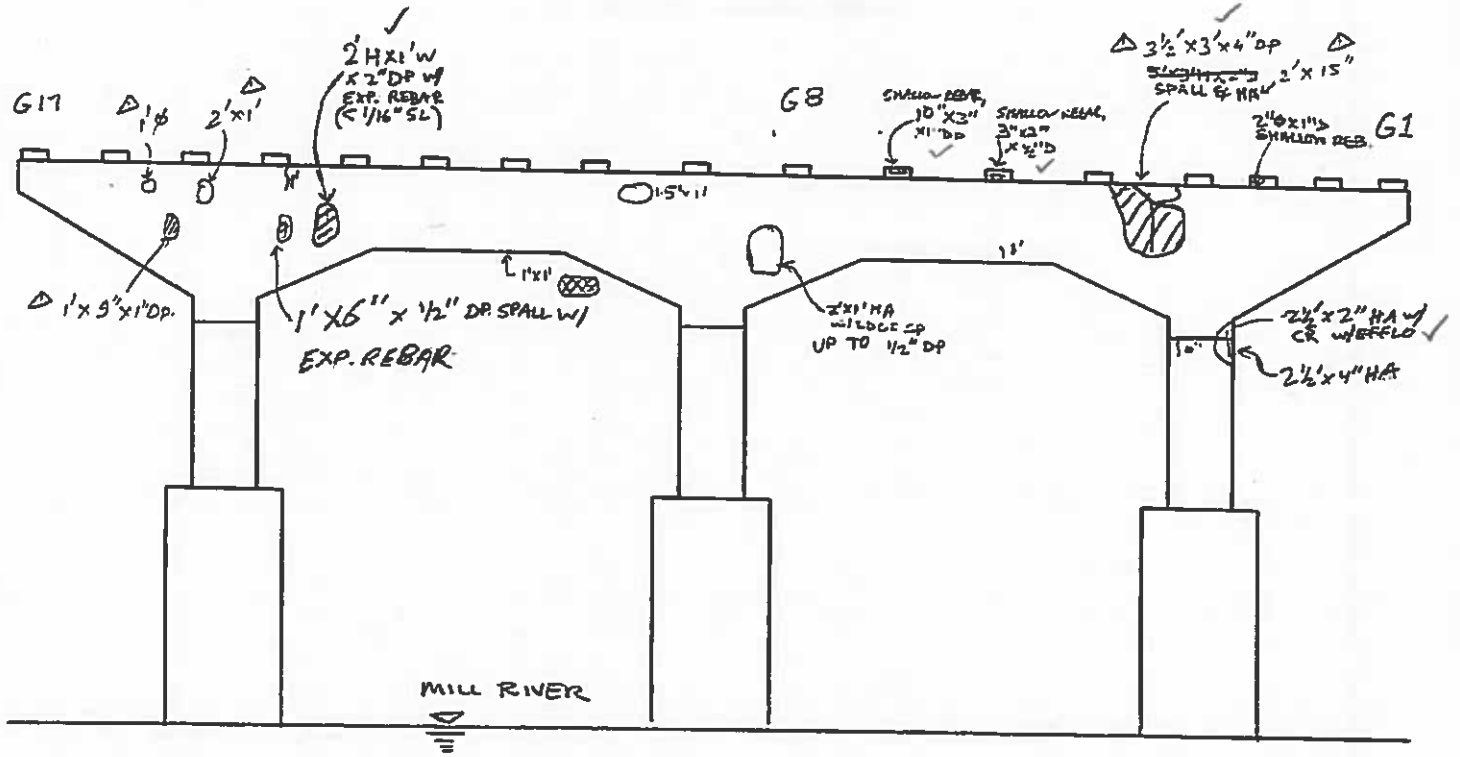

LEGEND

- HOLLOW AREA
- SHALLOW REBAR
- SPALL AREA
- SPALL AREA WITH EXPOSED REBAR
- MAP CRACKS OR HAIRLINE MAP CRACKS
- HAIRLINE CRACKS (HLC) OR CRACKS (CR)
- HONEY COMB AREA
- SCALE AREA (HVY, MED, OR LT)

GENERAL NOTES:
- SEE PIER 1 SOUTH ELEV. SHEET
- EXPOSED REB HAS NEG. SECTION LOSS, UNO.

PIER 2 NORTH ELEVATION

Revision	Date	Crew	Company
1	9/8/12	PKG, AKC	GMZ
2	6/30/14 & 9/8/14	RFP, PHH	DEW

FIELD NOTES

PREPARED BY: Garg Consulting Services, Inc. ENGINEERS • CONSULTANTS • CONSTRUCTION MANAGERS

PROJ. NO. 170-3013	BRIDGE NO. 3014A
DATE 11/02/2012	SHEET 24 of 70
CREW CL, MD, SN	

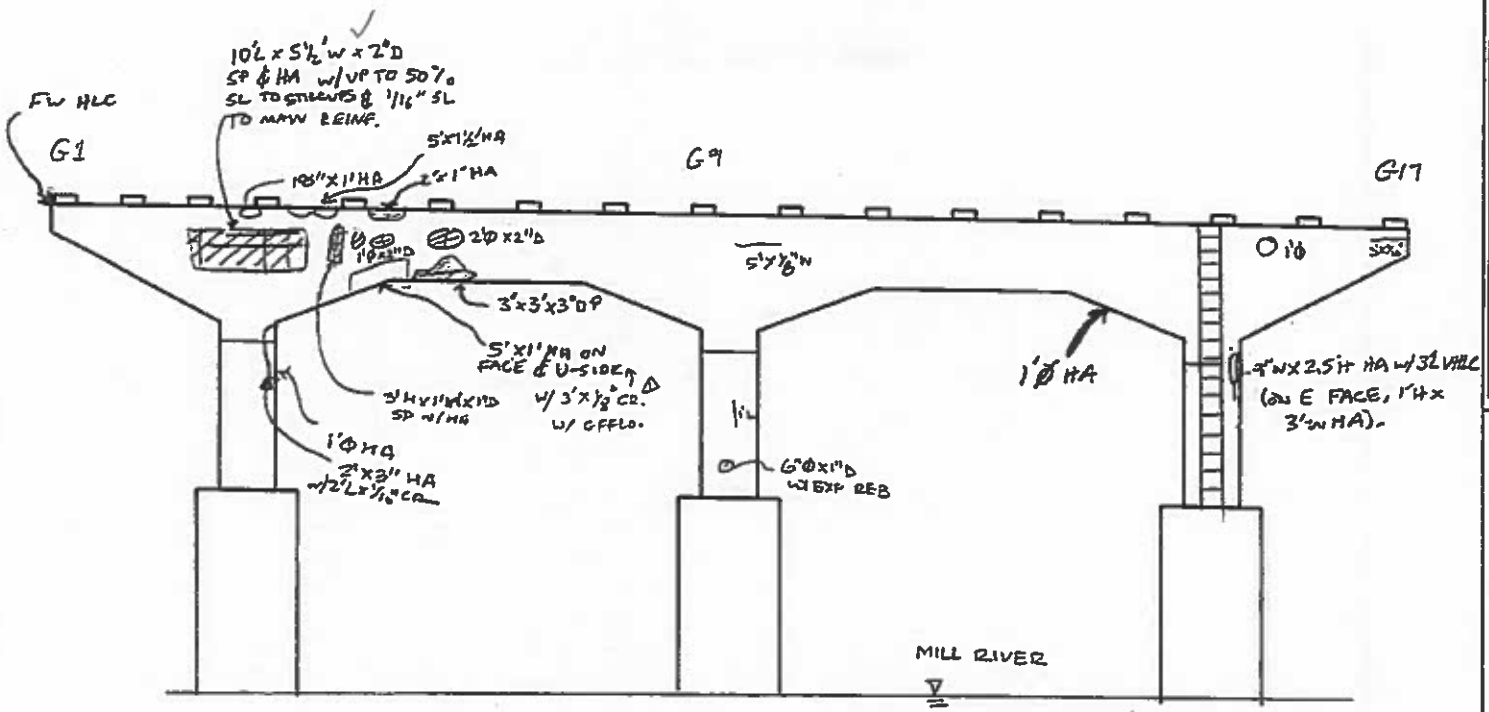

LEGEND

- HOLLOW AREA
- SHALLOW REBAR
- SPALL AREA
- SPALL AREA WITH EXPOSED REBAR
- MAP CRACKS OR HAIRLINE MAP CRACKS
- HAIRLINE CRACKS (HLC) OR CRACKS (CR)
- HONEY COMB AREA
- SCALE AREA (HVY, MED, OR LT)

GENERAL NOTES

-SEE PIER 1 SOUTH ELEV. SHEET

PIER 3 SOUTH ELEVATION

Revision	Date	Crew	Company
1	9/8/12	PKG, AKC	GM2
2	6/30/14	RFD, PHH	DEW

FIELD NOTES

PROJ. NO. 170-3013		BRIDGE NO. 3014A
DATE 11/03/2010		SHEET 22 71
CREW PDG, MD, SN, GF		

PREPARED BY: Garg Consulting Services, Inc.
ENGINEERS • CONSULTANTS • CONSTRUCTION MANAGERS

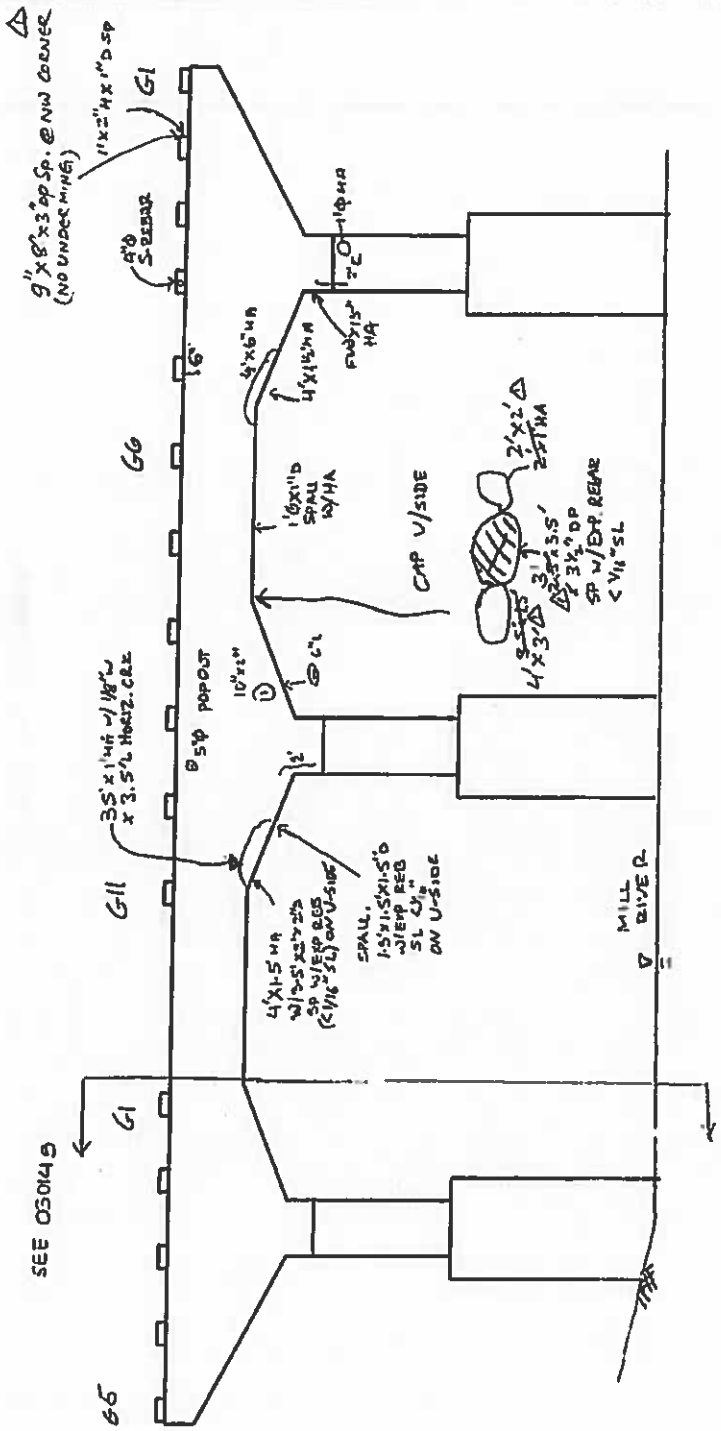

GENERAL NOTES
- SEE PIER 1 SOUTH ELEV. SHEET

PIER 3 NORTH ELEVATION

LEGEND
- HOLLOW AREA
- SHALLOW REBAR
- SPALL AREA
- SPALL AREA WITH EXPOSED REBAR
- MAP CRACKS OR HAIRLINE MAP CRACKS
- HAIRLINE CRACKS (HLC) OR CRACKS (CR)
- HONEY COMB AREA
- SCALE AREA (HVY, MED, OR LT)

Revision	Date	Crew	Company	Revision	Date	Crew	Company
1	9/9/12	PKG, AKC	GMZ				
2	6/30/14 & 7/8/14	RFP, PHH	DEW				

FIELD NOTES

PREPARED BY: Garg Consulting Services, Inc. ENGINEERS • CONSULTANTS • CONSTRUCTION MANAGERS	PROJ. NO. 170-3013	BRIDGE NO. 3014A
	DATE 11/03/2010	SHEET 73 72
	CREW PDG, MD, SN, GD	

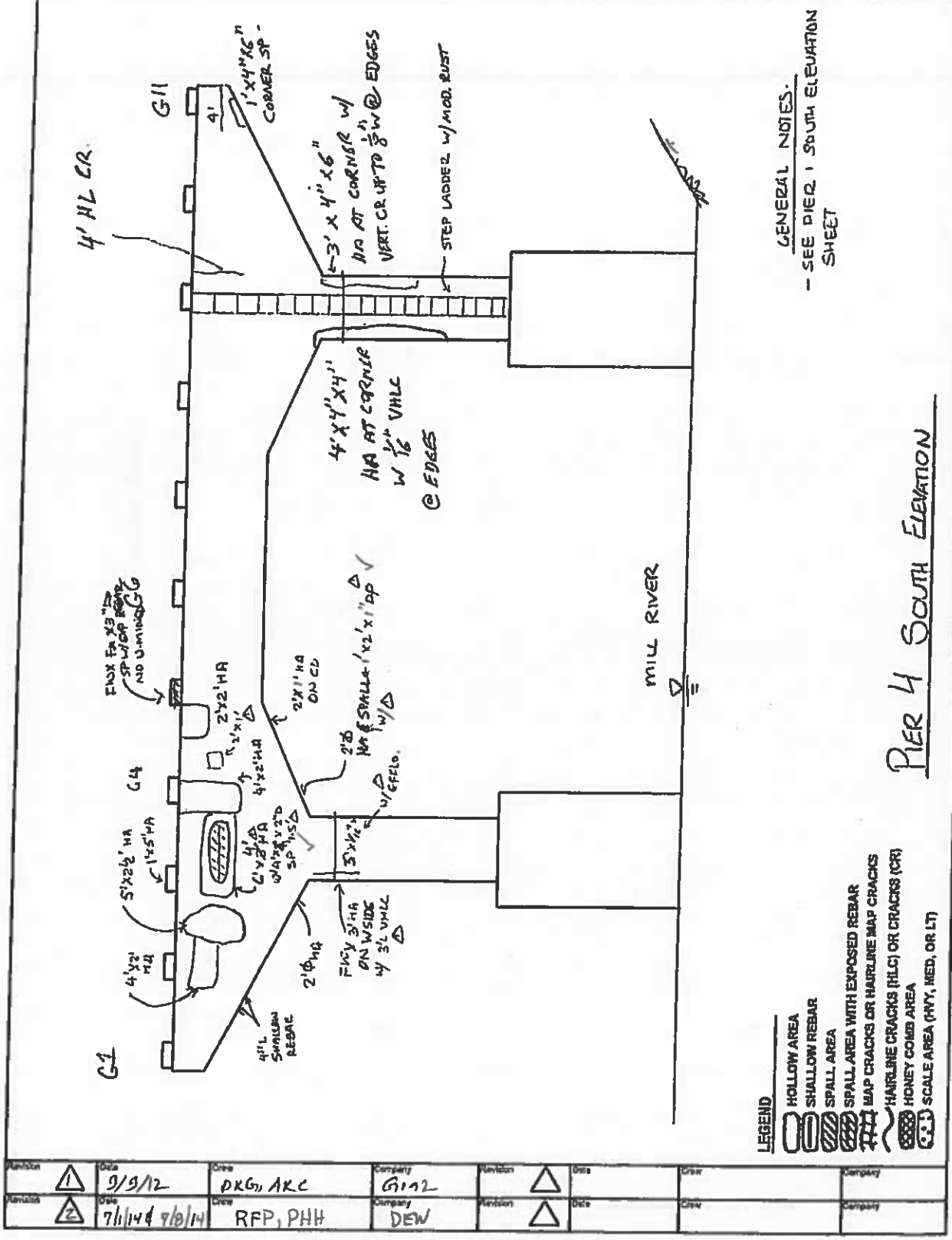

Revision	Date	Crew	Company	Revision	Date	Crew	Company
1	9/9/12	DKG, AKC	GIAZ				
2	7/1/14 & 7/8/14	RFP, PHH	DEW				

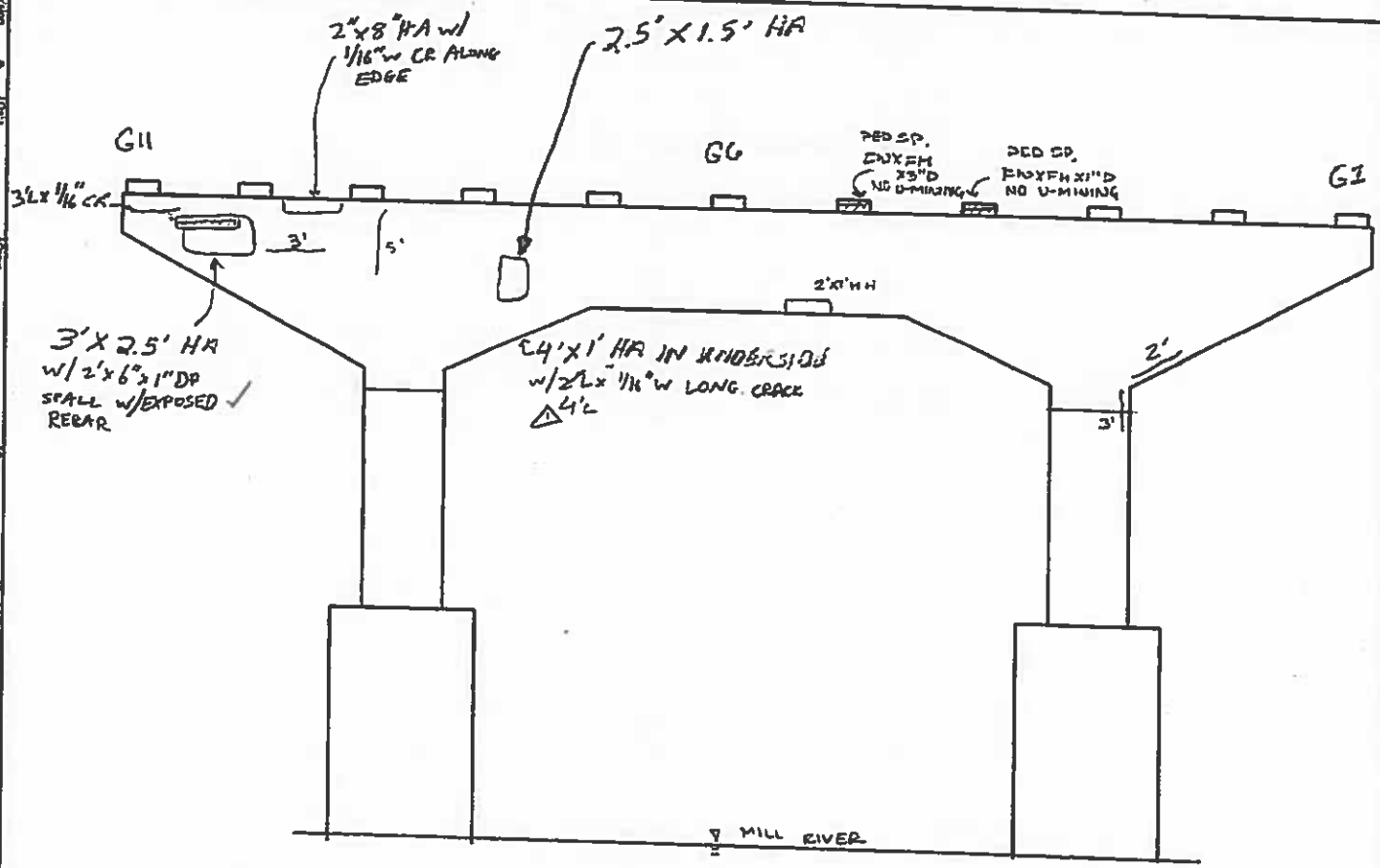

GENERAL NOTES

-SEE PIER 1 SOUTH ELEVATION SHEET

LEGEND

- HOLLOW AREA
- SHALLOW REBAR
- SPALL AREA
- SPALL AREA WITH EXPOSED REBAR
- MAP CRACKS OR HAIRLINE MAP CRACKS
- HAIRLINE CRACKS (HLC) OR CRACKS (CR)
- HONEY COMB AREA
- SCALE AREA (HVY, MED, OR LT)

PIER 4 NORTH ELEVATION

Revision	Date	Crew	Company
2	7/11/12	RFP, PHH	DEW
1	9/9/12	PKG, AKC	GM2

FIELD NOTES

PREPARED BY: Garg Consulting Services, Inc.

PROJ. NO. 170-3013

BRIDGE NO. 3014A

DATE 11/08/2010

SHEET 34 of 43

CREW PDG, SN, MD, GF

FIELD NOTES

PREPARED BY: Garg Consulting Services, Inc.
ENGINEERS • CONSULTANTS • CONSTRUCTION MANAGERS

PROJ. NO. 170-3013
DATE 11/03/2010
CREW PDG, MD, SN, GF
BRIDGE NO. 3014A
SHEET 74

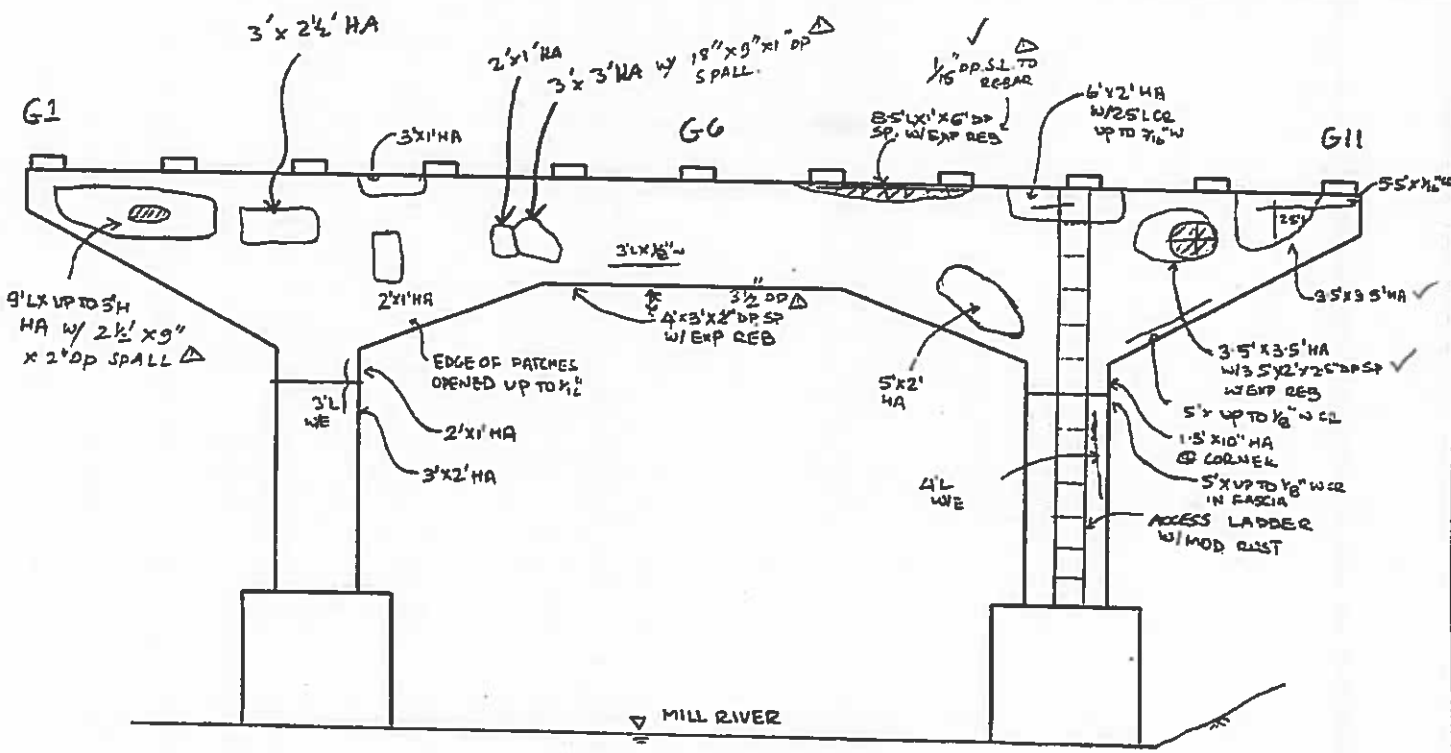

GENERAL NOTES

- SEE PIER 1 SOUTH ELEV SHEET
- EXPOSED RUSTED REBARS HAVE UP TO 1/16" SL, UND.

LEGEND

- HOLLOW AREA
- SHALLOW REBAR
- SPALL AREA
- SPALL AREA WITH EXPOSED REBAR
- MAP CRACKS OR HAIRLINE MAP CRACKS
- HAIRLINE CRACKS (HLC) OR CRACKS (CR)
- HONEY COMB AREA
- SCALE AREA (HVY, MED, OR LT)

PIER 5 SOUTH ELEVATION

Revision	Date	Crew	Company	Revision	Date	Crew	Company
	11/04/2010	RFD, PHH	DEW				

FIELD NOTES

PROJ. NO. 170-3013	BRIDGE NO. 3014A
DATE 11/03/2010	SHEET 74 75
PREPARED BY: Garg Consulting Services, Inc.	CREW PDG, MD, SN, GF

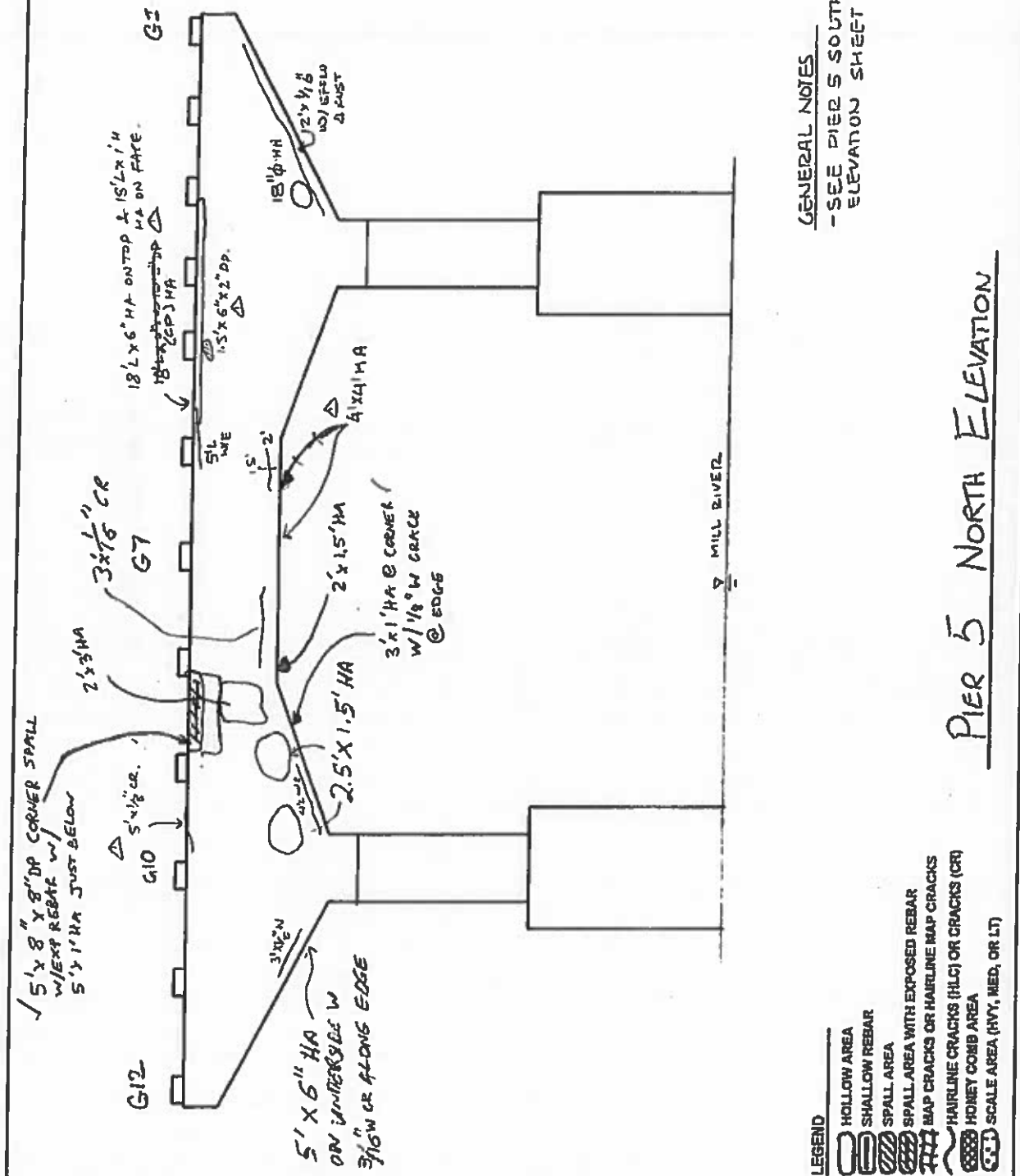

Revision	Date	Crew	Company	Revision	Date	Crew	Company
1	9/10/12	DKG, AKC	GMM				
2	7/1/14 & 7/8/14	RFP, PHH	DEW				

FIELD NOTES

PREPARED BY: Garg Consulting Services, Inc.

PROJ. NO. 170-3013	BRIDGE NO. 3014A
DATE 11/09/2010	SHEET 24 of 74
CREW PDG, MD. SN, GF	

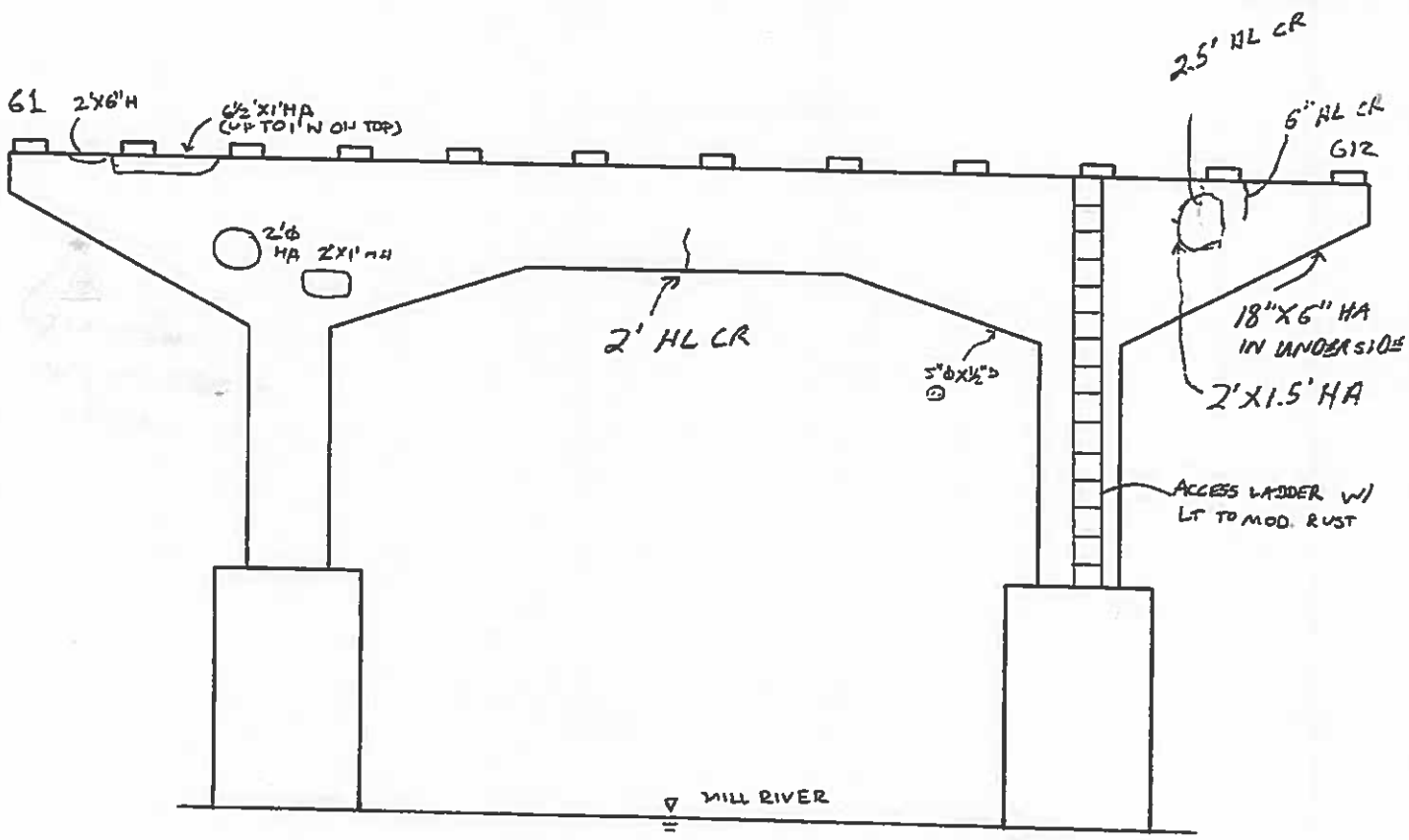

LEGEND

- HOLLOW AREA
- SHALLOW REBAR
- SPALL AREA
- SPALL AREA WITH EXPOSED REBAR
- MAP CRACKS OR HAIRLINE MAP CRACKS
- HAIRLINE CRACKS (HLC) OR CRACKS (CR)
- HONEY COMB AREA
- SCALE AREA (HVY, MED, OR LT)

GENERAL NOTES:

-SEE PIER 1 SOUTH ELEV. SHEET

PIER 6 SOUTH ELEVATION

Revision	Date	Crew	Company
1	9/10/12	PKG, AKC	GMZ
2	11/14/12	REP, DHH	DEW

FIELD NOTES

	PROJ. NO. 170-3013	BRIDGE NO. 3014A
	DATE 11/03/2010	SHEET 76 77
PREPARED BY: Garg Consulting Services, Inc. ENGINEERS • CONSULTANTS • CONSTRUCTION MANAGERS	CREW PDG, MD, SN, GF	

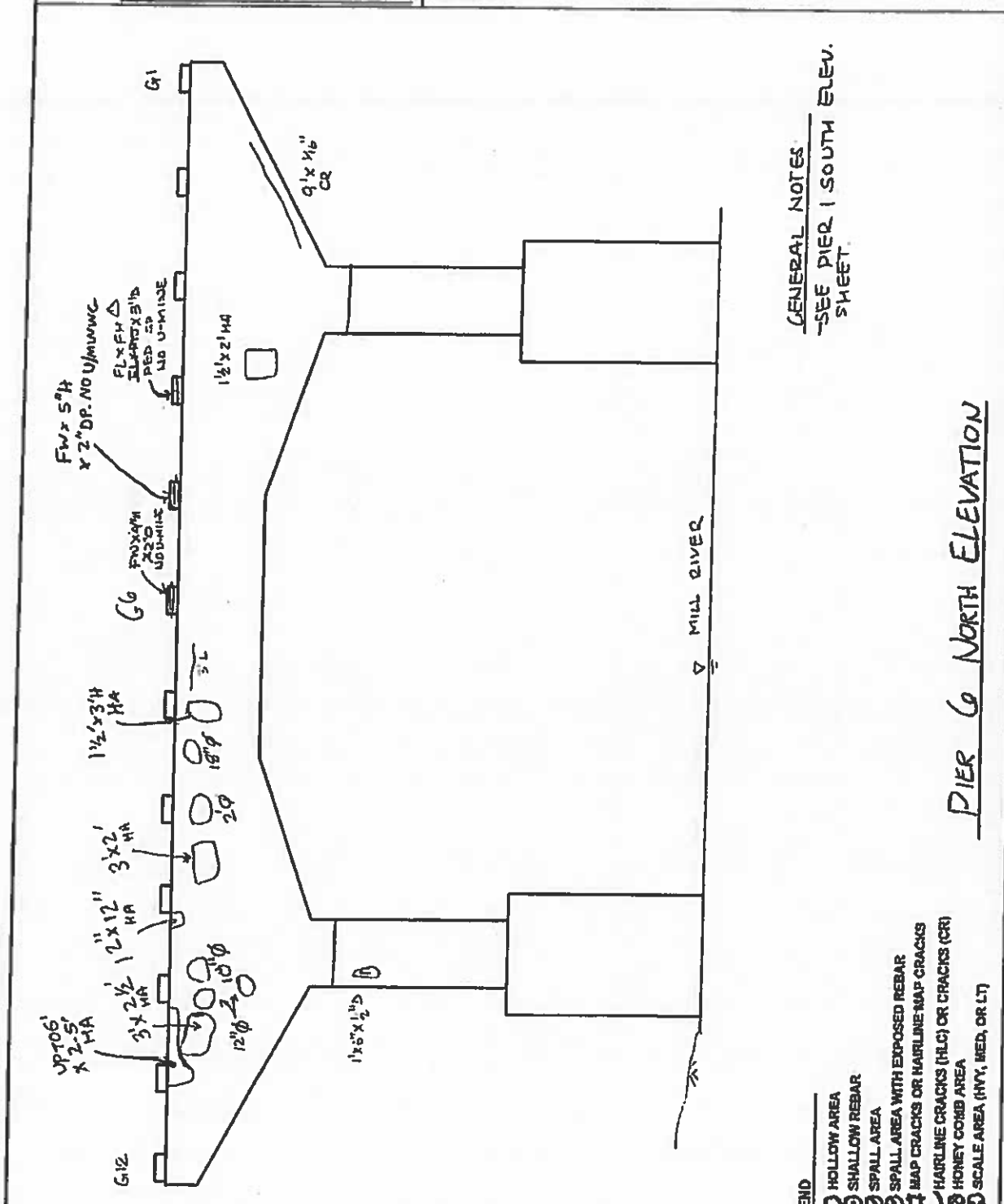

Revision	Date	Crew	Company	Revision	Date	Crew	Company
1	9/10/12	DK G, AK C	GSM2				
2	7/1/14 & 7/9/14	REP, PHH	DEW				

FIELD NOTES

PROJ. NO. 170-3013	BRIDGE NO. 3014A
DATE 11/08/2010	SHEET 29 78
CREW PDG, MD, SN, GF	

PREPARED BY: Gnrg Consulting Services, Inc.
ENGINEERS • CONSULTANTS • CONSTRUCTION MANAGERS

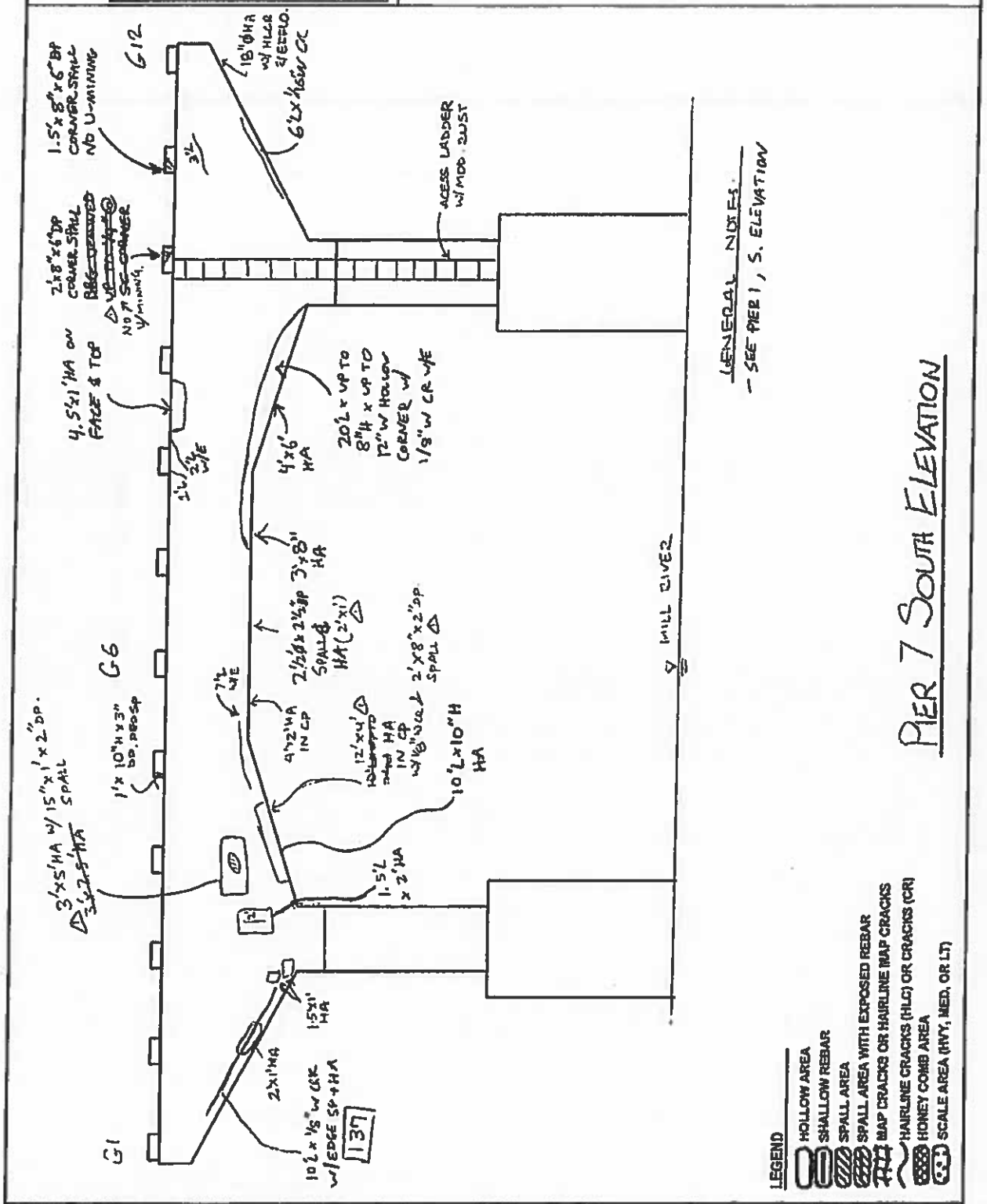

LEGEND
- HOLLOW AREA
- SHALLOW REBAR
- SPALL AREA
- SPALL AREA WITH EXPOSED REBAR
- MAP CRACKS OR HAIRLINE MAP CRACKS
- HAIRLINE CRACKS (HLC) OR CRACKS (CR)
- HONEY COMB AREA
- SCALE AREA (HVY, MED, OR LT)

Revision	Date	Crew	Company	Revision	Date	Crew	Company
2	7/12/14 & 7/17/14	RFP, PHH	DEW				

FIELD NOTES

PROJ. NO. 170-3013	BRIDGE NO. 3014A	
DATE 11/09/2010	SHEET ~~80~~ 79	
CREW PDG, MD, SM, GF		

PREPARED BY: Garg Consulting Services, Inc. ENGINEERS • CONSULTANTS • CONSTRUCTION MANAGERS

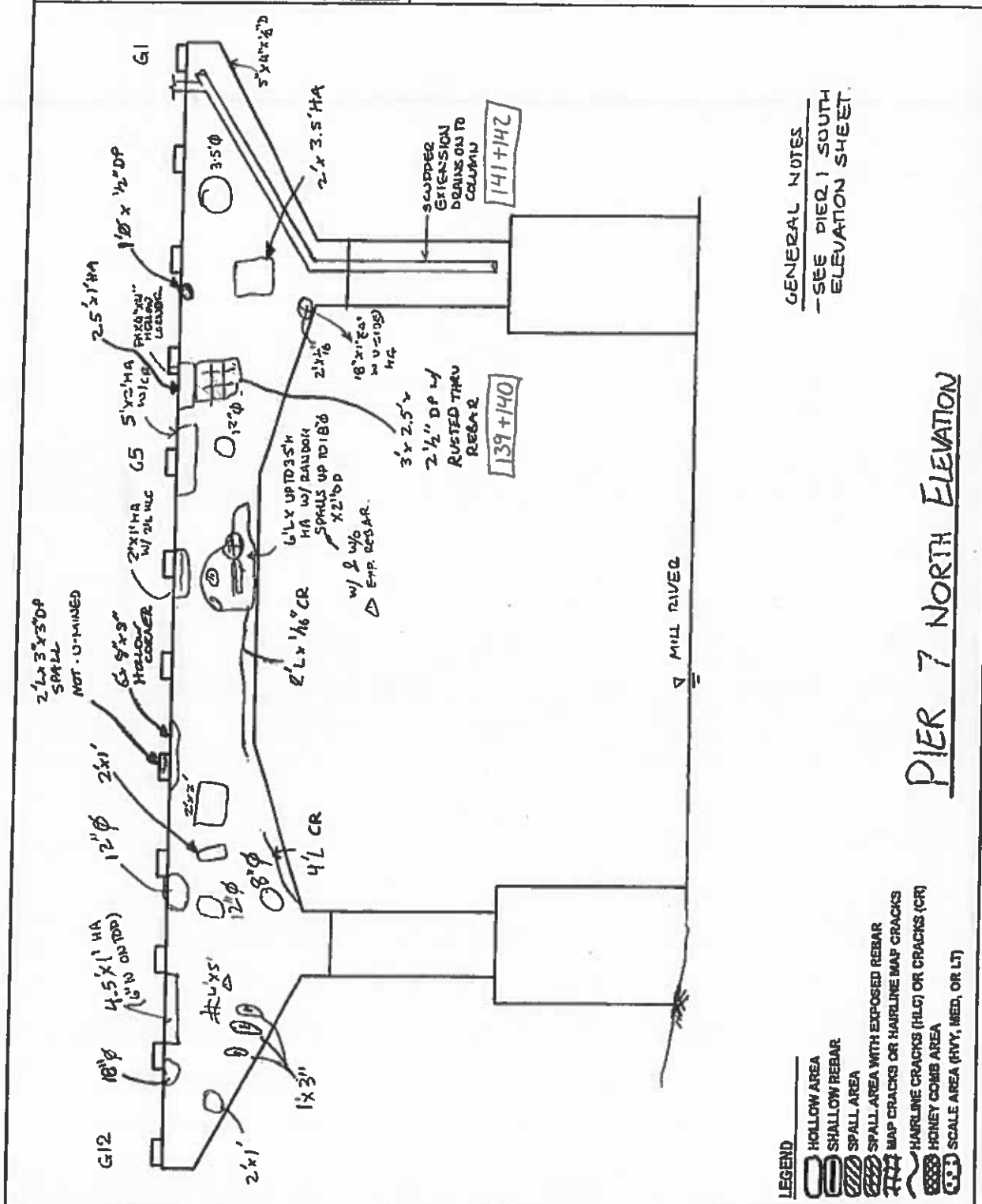

Revision	Date	Crew	Company	Revision	Date	Crew	Company
1	9/10/12	PKG, AKC	GM2				
2	7/2/14 & 7/9/14	RFP, PHH	DEW				

FIELD NOTES

PREPARED BY: Garg Consulting Services, Inc.

PROJ. NO. 170-3013	BRIDGE NO. 3014A
DATE 11/08/2010	SHEET 80
CREW DDG, MD, SN, GF	

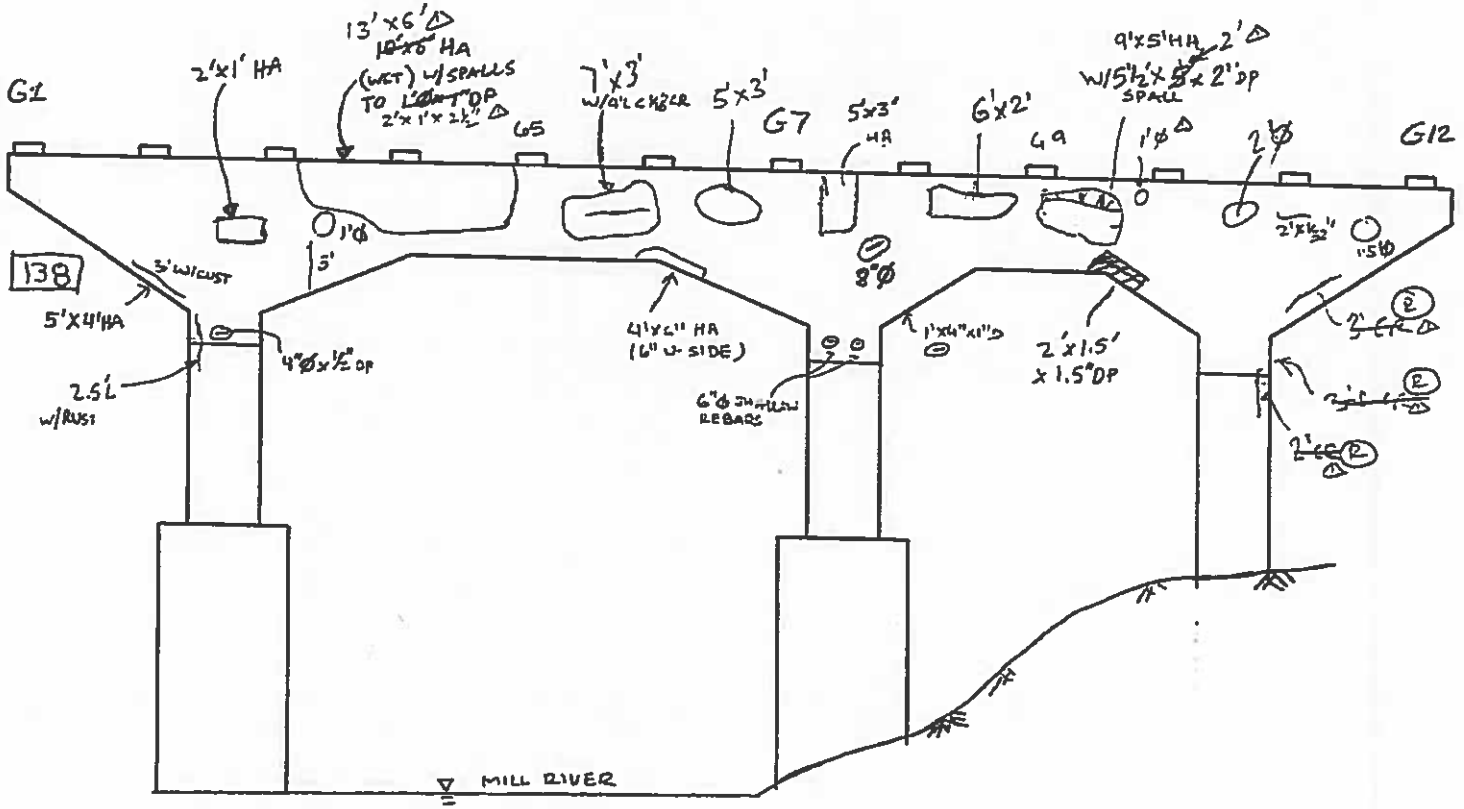

LEGEND

- HOLLOW AREA
- SHALLOW REBAR
- SPALL AREA
- SPALL AREA WITH EXPOSED REBAR
- MAP CRACKS OR HAIRLINE MAP CRACKS
- HAIRLINE CRACKS (HLC) OR CRACKS (CR)
- HONEY COMB AREA
- SCALE AREA (HVY, MED, OR LT)

GENERAL NOTES

- SEE PIER 7 SOUTH ELEV. SHEET.

(R) = REPAIRED

PIER 8 SOUTH ELEVATION

Revision	Date	Crew	Company
1	9/10/12	DKG, AKC	GM2
2	7/21/14 & 7/9/14	RFD, PHH	DEW

FIELD NOTES

PREPARED BY: Gary Consulting Services, Inc. ENGINEERS • CONSULTANTS • CONSTRUCTION MANAGERS

PROJ. NO. 170-3013 | BRIDGE NO. 3014A

DATE 11/1/2010 | SHEET #2 of 8

CREW PDG, DLC, MD

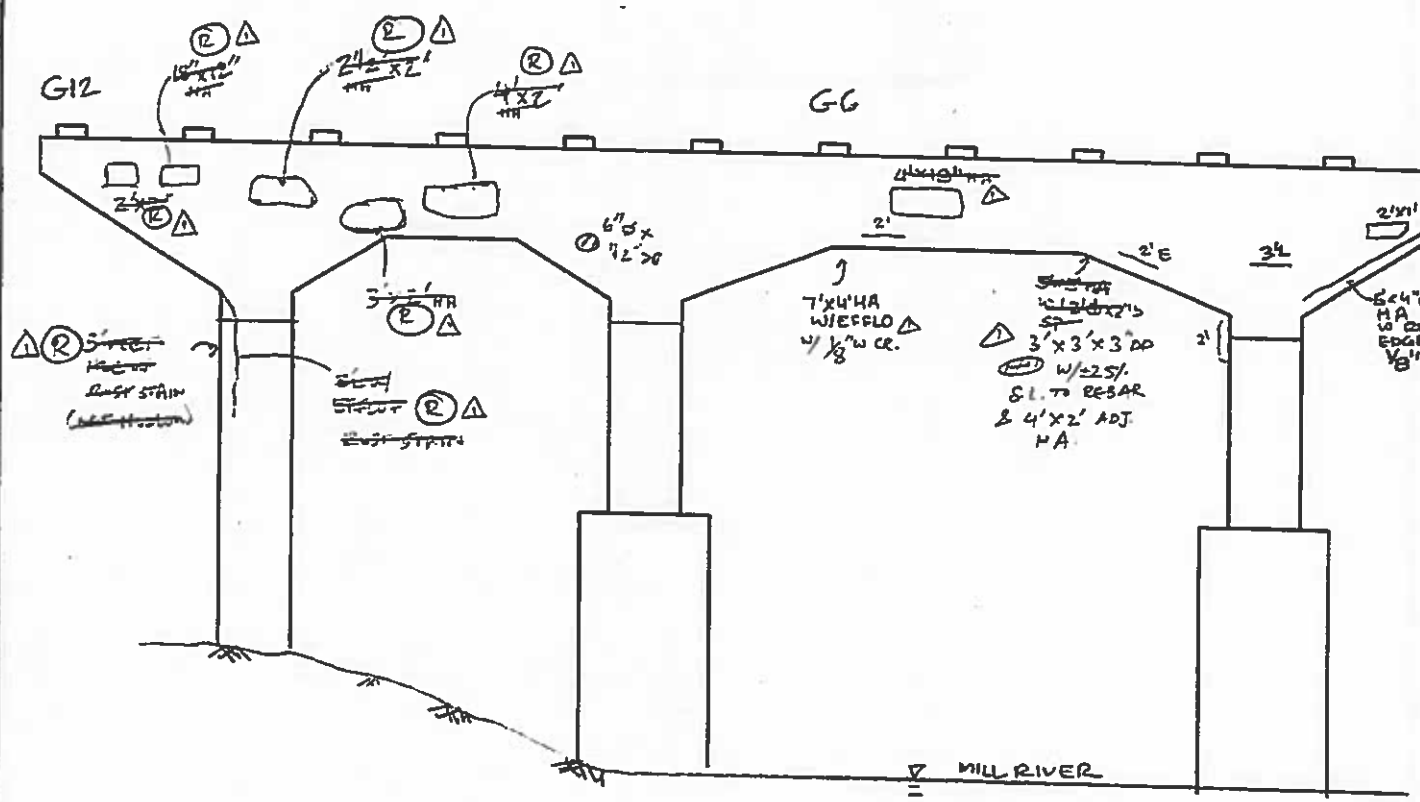

GENERAL NOTES

– SEE PIER 1 SOUTH ELEVATION SHEET

LEGEND

- HOLLOW AREA
- SHALLOW REBAR
- SPALL AREA
- SPALL AREA WITH EXPOSED REBAR
- MAP CRACKS OR HAIRLINE MAP CRACKS
- HAIRLINE CRACKS (HLC) OR CRACKS (CR)
- HONEY COMB AREA
- SCALE AREA (HVY, MED, OR LT)

(R) = REPAIRED

PIER 8 NORTH ELEVATION

FIELD NOTES

PREPARED BY: Garg Consulting Services, Inc.
ENGINEERS • CONSULTANTS • CONSTRUCTION MANAGERS

PROJ. NO. 170-3013 | BRIDGE NO. 3014A

DATE 11/11/2010 | SHEET 82

CREW PDG, DLC, MD

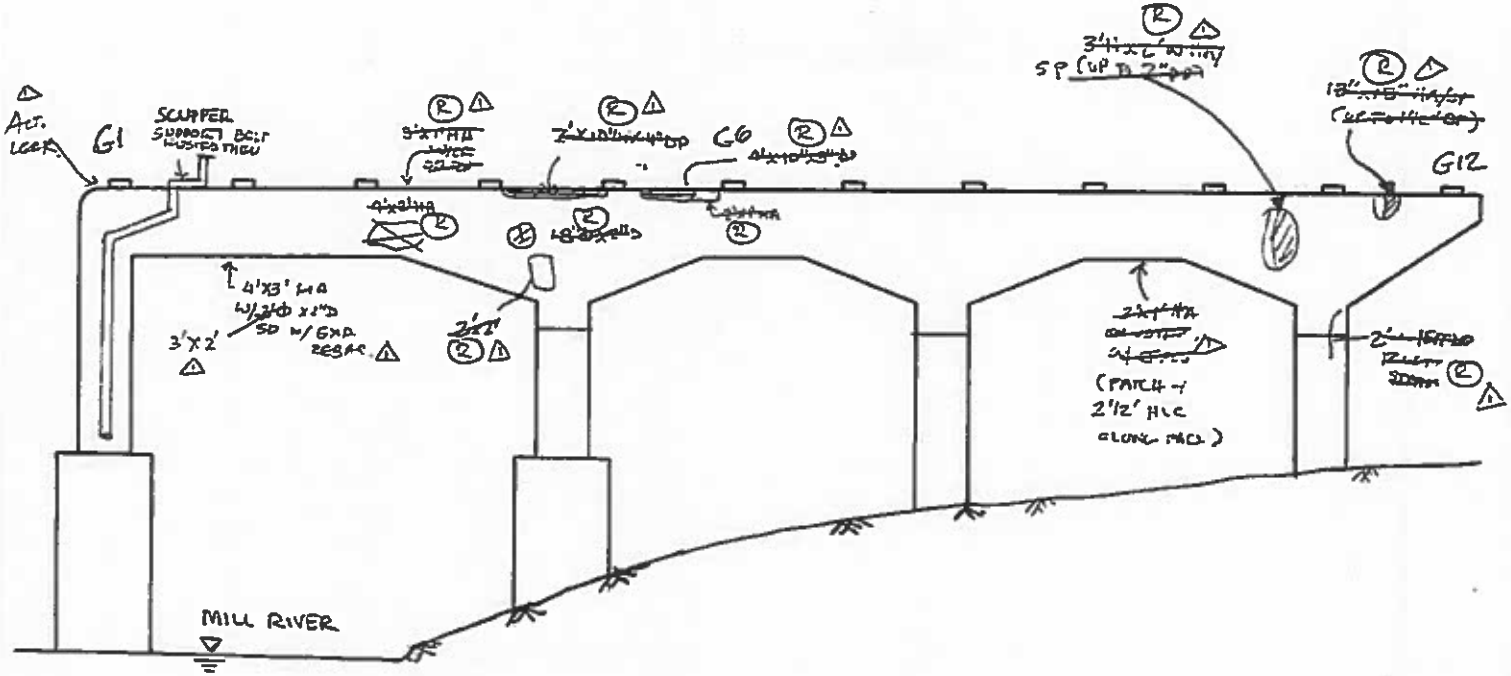

GENERAL NOTES

- SEE PIER 1 SOUTH ELEVATION SHEET
- EXPOSED REBAR HAS < 1/16" SL, UNO.

(R) = REPAIRED

LEGEND

- HOLLOW AREA
- SHALLOW REBAR
- SPALL AREA
- SPALL AREA WITH EXPOSED REBAR
- MAP CRACKS OR HAIRLINE MAP CRACKS
- HAIRLINE CRACKS (HLC) OR CRACKS (CR)
- HONEY COMB AREA
- SCALE AREA (HVY, MED, OR LT)

PIER 9 SOUTH ELEVATION

FIELD NOTES

PROJ. NO. 170-3013	BRIDGE NO. 3014A
DATE 09/08/2010	SHEET 84 83
CREW PDG, MD	

PREPARED BY: Garg Consulting Services, Inc. ENGINEERS • CONSULTANTS • CONSTRUCTION MANAGERS

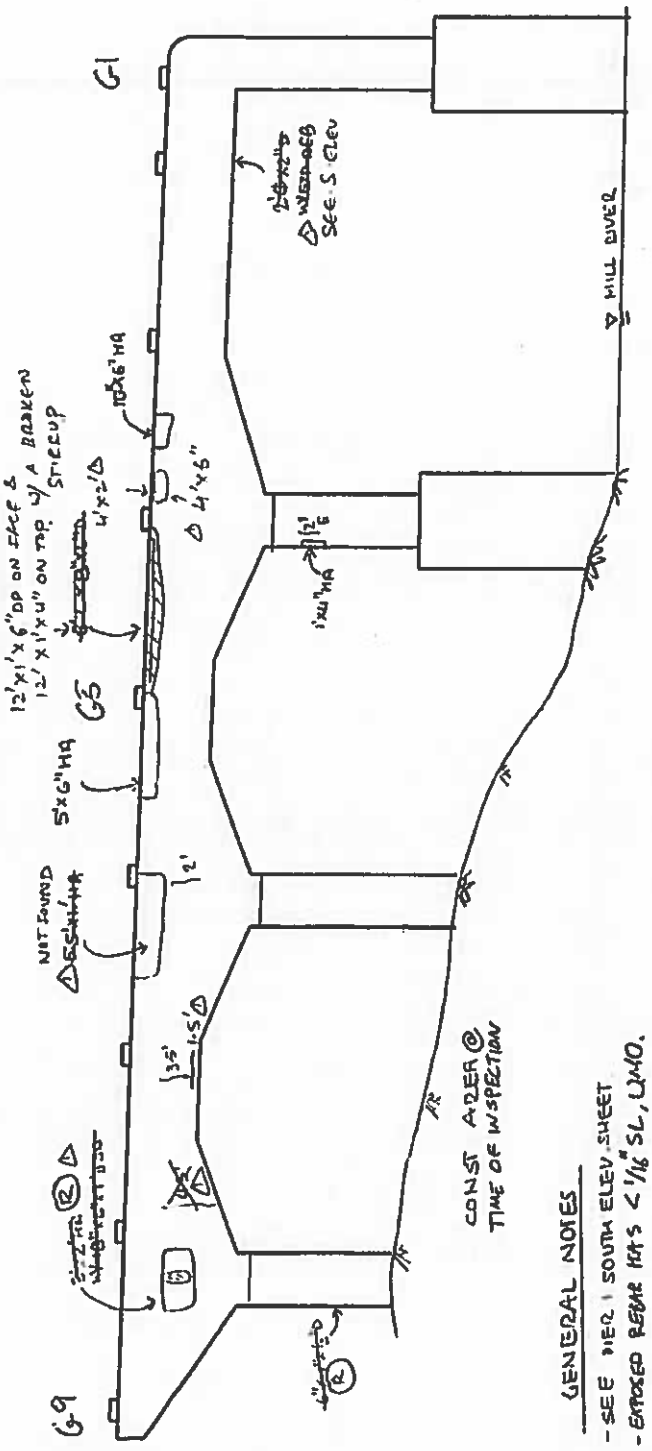

Revision	Date	Crew	Company	Revision	Date	Crew	Company
1	9/5/12	DKG, AKC	GMZ				
2	7/2/14 & 7/10/14	RFP, PHH	DEW				

FIELD NOTES

PROJ. NO. 170-3013	BRIDGE NO. 3014A
DATE 09/08/2010	SHEET ~~83~~ 84
CREW PDG, MD	

PREPARED BY: Garg Consulting Services, Inc.
ENGINEERS • CONSULTANTS • CONSTRUCTION MANAGERS

GENERAL NOTES: (1)
- SEE PIER 1 SOUTH ELEV. SHEET.
- ~~EXPOSED REBAR HAS <1/16" SL, ...~~ (2)
- AREAS OF ACT. LEAK ON PIER CAP.

PIER 10 SOUTH ELEVATION

(R) = REPAIRED (1)

LEGEND
- HOLLOW AREA
- SHALLOW REBAR
- SPALL AREA
- SPALL AREA WITH EXPOSED REBAR
- MAP CRACKS OR HAIRLINE MAP CRACKS
- HAIRLINE CRACKS (HLC) OR CRACKS (CR)
- HONEY COMB AREA
- SCALE AREA (HVY, MED, OR LT)
- * = EFFLO. PRESENT (2)

Revision	Date	Crew	Company	Revision	Date	Crew	Company
1	9/5/12	PKG, AKC	GM2				
2	7/10/14 & 7/15/14	RFP, PHH	DEW				

FIELD NOTES

PROJ. NO. 170-3013	BRIDGE NO. 3014A
DATE: 09/08/2010	SHEET 84 85
PREPARED BY: Garg Consulting Services, Inc.	CREW: PDG, MD

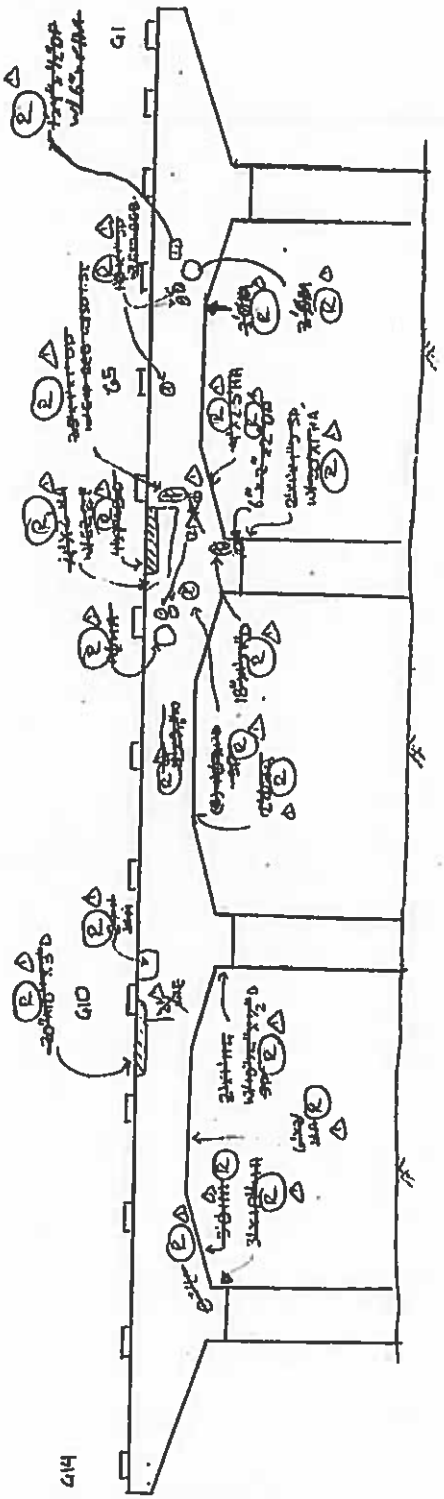

- AREAS OF ACTIVE LEAK. ON PIER CAP.

PIER ID NORTH ELEVATION

GENERAL NOTES:

-SEE PIER 1 SOUTH ELEVATION SHEET

(2) = REPAIRS

LEGEND

- HOLLOW AREA
- SHALLOW REBAR
- SPALL AREA
- SPALL AREA WITH EXPOSED REBAR
- MAP CRACKS OR HAIRLINE MAP CRACKS
- HAIRLINE CRACKS (HLC) OR CRACKS (CR)
- HONEY COMB AREA
- SCALE AREA (HVY, MED, OR LT)

Revision	Date	Crew	Company	Revision	Date	Crew	Company
1	9/5/12	PKG, AKL	GM2				
2	7/10/14 & 7/15/14	RFP, PHH	DEW				

FIELD NOTES

PROJ. NO. 170-3013	BRIDGE NO. 3014A
DATE 09/14/2010	SHEET ~~87~~ 86
CREW PDG, MD	

PREPARED BY: Garg Consulting Services, Inc. — ENGINEERS • CONSULTANTS • CONSTRUCTION MANAGERS

(E) = REPAIRED

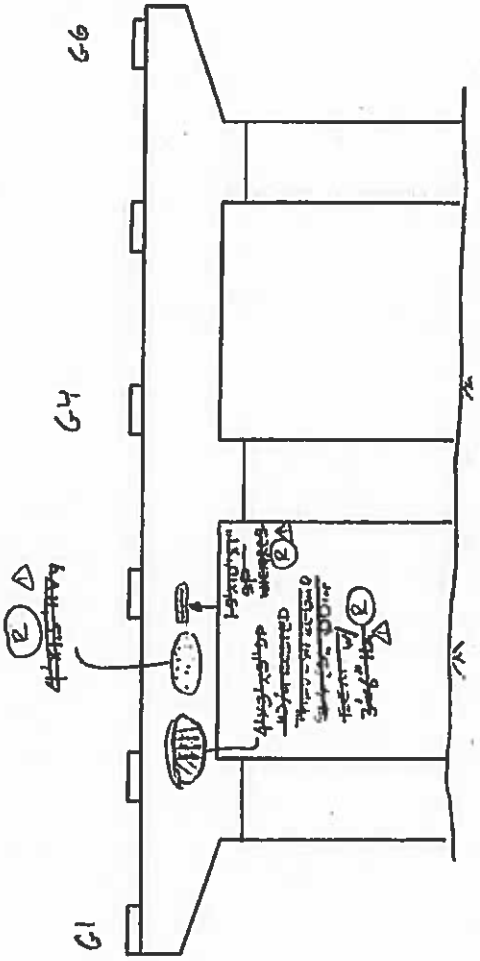

GENERAL NOTES
- SEE PIER 1, SOUTH ELEVATION.

Pier 11 South Elevation West Half

LEGEND
- HOLLOW AREA
- SHALLOW REBAR
- SPALL AREA
- SPALL AREA WITH EXPOSED REBAR
- MAP CRACKS OR HAIRLINE MAP CRACKS
- HAIRLINE CRACKS (HLC) OR CRACKS (CR)
- HONEY COMB AREA
- SCALE AREA (HVY, MED, OR LT)

Revision	Date	Crew	Company	Revision	Date	Crew	Company
1	9/4/12	DKG, AKC	GM2				
2	7/15/14	RFP, PHH	DEW				

FIELD NOTES

PREPARED BY: Garg Consulting Services, Inc.
ENGINEERS • CONSULTANTS • CONSTRUCTION MANAGERS

PROJ. NO. 170-3013	BRIDGE NO. 3014A
DATE 09/13/2010	SHEET ~~88~~ 87
CREW PDG, MD	

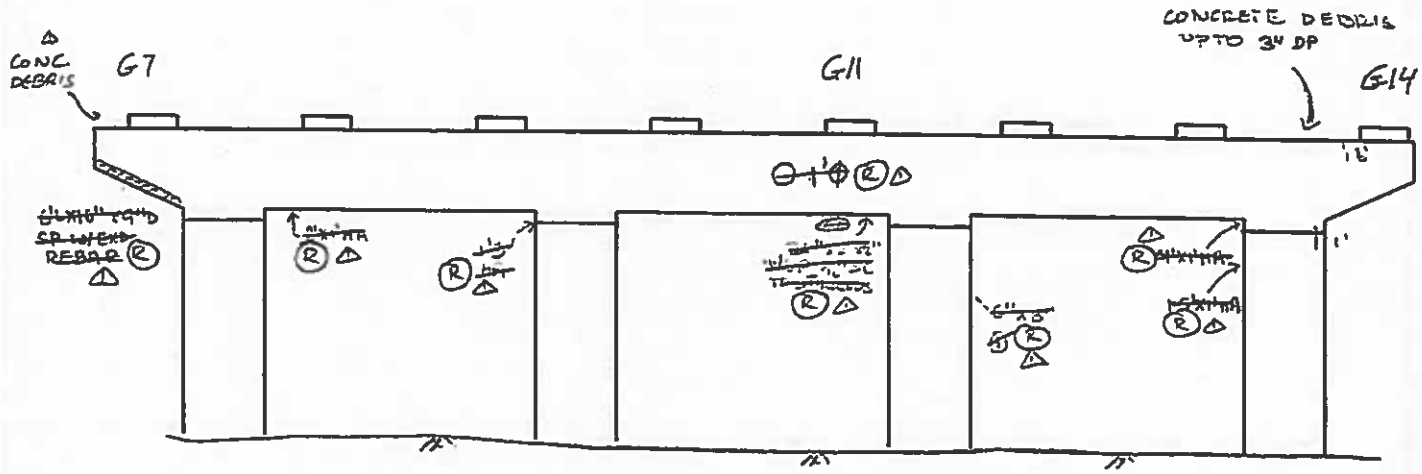

GENERAL NOTES
- SEE PIER 1, S. ELEVATION.
- ~~EXPOSED REBAR HAS < 1/16" SL~~ UNO.

(R) = REPAIRED

LEGEND
- HOLLOW AREA
- SHALLOW REBAR
- SPALL AREA
- SPALL AREA WITH EXPOSED REBAR
- MAP CRACKS OR HAIRLINE MAP CRACKS
- HAIRLINE CRACKS (HLC) OR CRACKS (CR)
- HONEY COMB AREA
- SCALE AREA (HVY, MED, OR LT)

PIER 11 SOUTH ELEVATION EAST HALF

Revision	Date	Crew	Company	Revision	Date	Crew	Company
1	9/4/12	PKG, AKC	GM2	1			
2	7/15/14	RFP, PHH	DEW	2			

FIELD NOTES

PROJ. NO. 170-3013		BRIDGE NO. 3014A
DATE 09/13/2010		SHEET 89 88
PREPARED BY: Garg Consulting Services, Inc.	CREW PDG, MD	

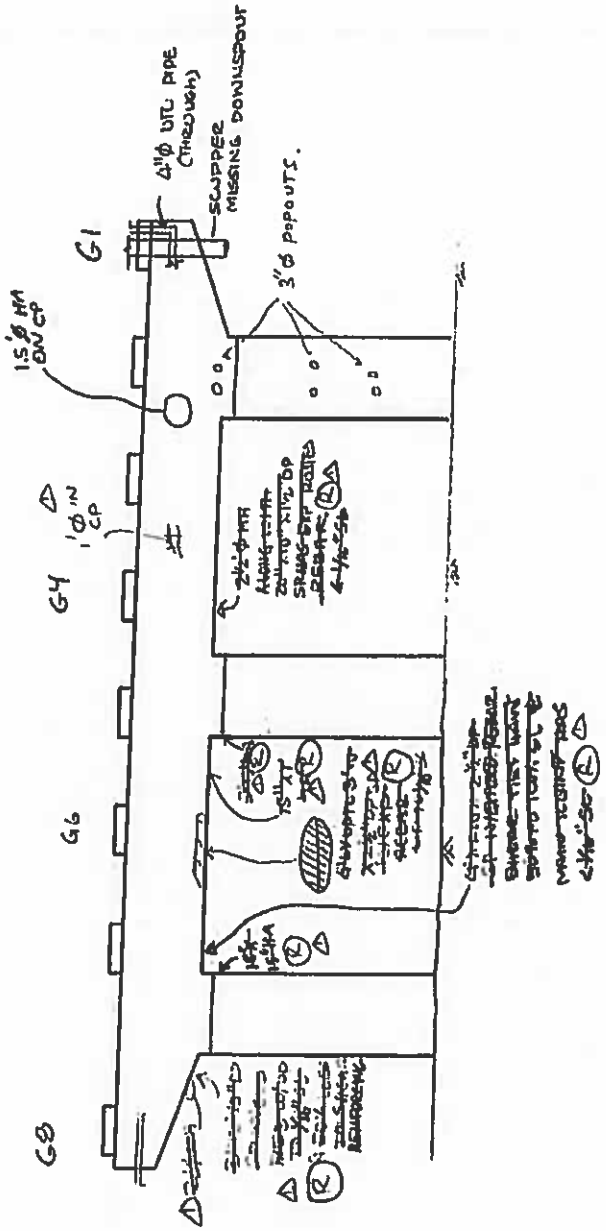

GENERAL NOTES
-SEE PIER 1 SOUTH ELEVATION SHEET.

(R) = REPAIRED

PIER 11 NORTH ELEVATION WEST HALF

LEGEND
- HOLLOW AREA
- SHALLOW REBAR
- SPALL AREA
- SPALL AREA WITH EXPOSED REBAR
- MAP CRACKS OR HAIRLINE MAP CRACKS
- HAIRLINE CRACKS (HLC) OR CRACKS (CR)
- HONEY COMB AREA
- SCALE AREA (HVY, MED, OR LT)

Revision	Date	Crew	Company	Revision	Date	Crew	Company
1	9/4/12	DKG, AKC	GM2				
2	7/15/14	RFP, PHH	DEW				

FIELD NOTES

PREPARED BY: Greg Consulting Services, Inc.

PROJ. NO. 170-3013	BRIDGE NO. 3014A
DATE 08/13/2010	SHEET 88 & 89
CREW PDG, MD	

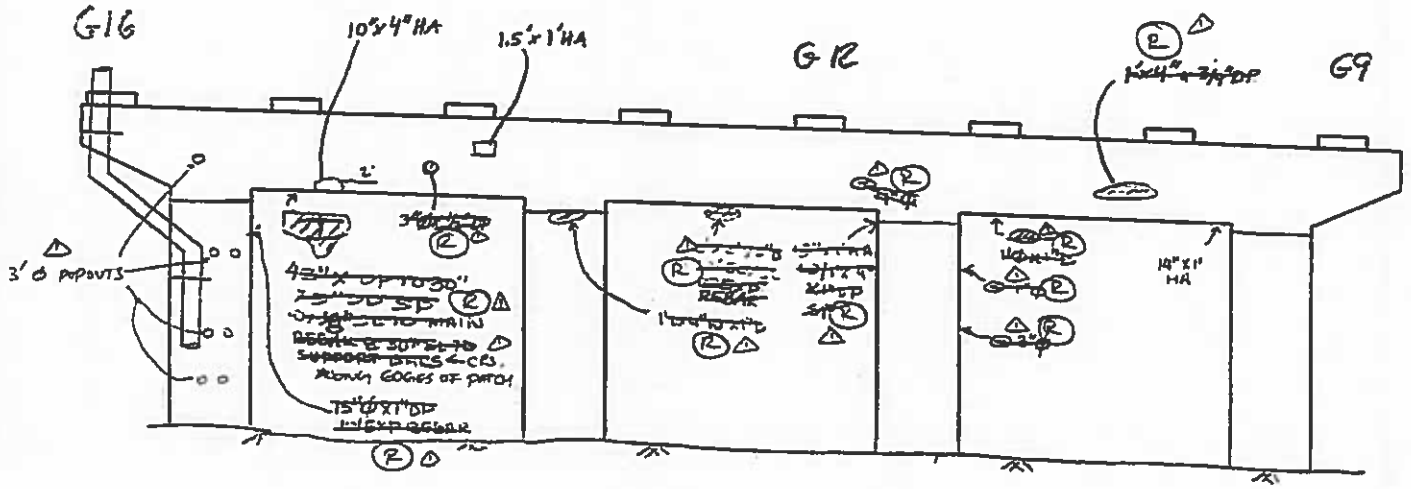

GENERAL NOTES
- SEE PIER 1, SOUTH ELEVATION.

(R) = REPAIRED

LEGEND
- HOLLOW AREA
- SHALLOW REBAR
- SPALL AREA
- SPALL AREA WITH EXPOSED REBAR
- MAP CRACKS OR HAIRLINE MAP CRACKS
- HAIRLINE CRACKS (HLC) OR CRACKS (CR)
- HONEY COMB AREA
- SCALE AREA (HVY, MED, OR LT)

PIER 11 NORTH ELEVATION EAST HALF

Revision	Date	Crew	Checked	Revision
1	9/4/12	PKG, AKC	GMZ	
2	7/15/14	RFP, PHH	DEW	

FIELD NOTES

PREPARED BY: Garg Consulting Services, Inc. ENGINEERS • CONSULTANTS • CONSTRUCTION MANAGERS	PROJ. NO. 170-3013	BRIDGE NO. 3014A
	DATE 9/13/10	SHEET 9 of 90
	CREW PDG, MD	

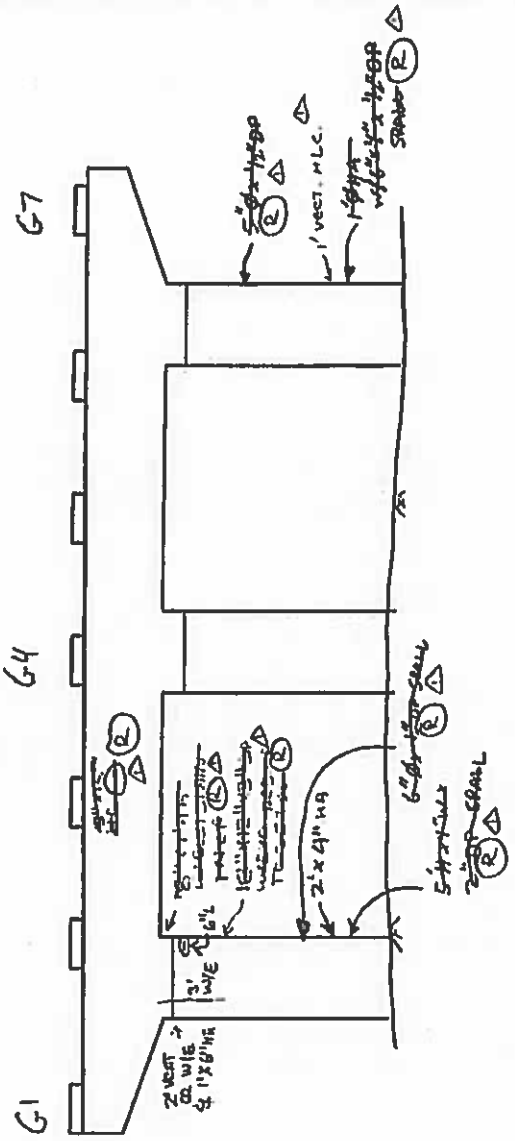

GENERAL NOTES
- SEE PIER 1, S. ELEVATION

(R) = REPAIRED

PIER 12 SOUTH ELEVATION WEST HALF

LEGEND
- HOLLOW AREA
- SHALLOW REBAR
- SPALL AREA
- SPALL AREA WITH EXPOSED REBAR
- MAP CRACKS OR HAIRLINE MAP CRACKS
- HAIRLINE CRACKS (HLC) OR CRACKS (CR)
- HONEY COMB AREA
- SCALE AREA (HVY, MED, OR LT)

Revision	Date	Crew	Company	Revision	Date	Crew	Company
1	9/3/12	PKG, ARC	GMA2				
2	4/14/14 & 7/15/14	RFP, PHH	DEW				

FIELD NOTES

PROJ. NO. 170-3013	BRIDGE NO. 3014A
DATE 09/13/2010	SHEET 92 91
CREW PDA, MD	

PREPARED BY: Garg Consulting Services, Inc. ENGINEERS • CONSULTANTS • CONSTRUCTION MANAGERS

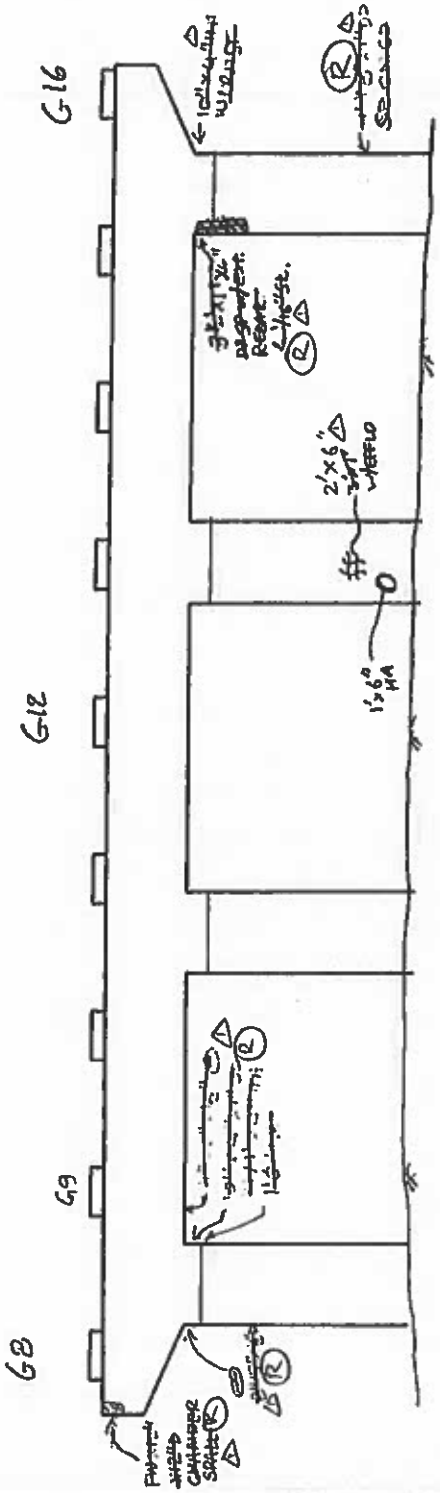

PIER 12 SOUTH ELEVATION EAST HALF

R = REPAIRED

GENERAL NOTES
- SEE PIER 1, S. ELEVATION.

LEGEND
- HOLLOW AREA
- SHALLOW REBAR
- SPALL AREA
- SPALL AREA WITH EXPOSED REBAR
- MAP CRACKS OR HAIRLINE MAP CRACKS
- HAIRLINE CRACKS (HLC) OR CRACKS (CR)
- HONEY COMB AREA
- SCALE AREA (HVY, MED, OR LT)

Revision	Date	Crew	Company	Revision	Date	Crew	Company
1	9/3/12	DKG, AKC	GMZ				
2	7/14/14 & 7/15/14	RFD, PHH	DEW				

FIELD NOTES

PROJ. NO. 170-3013	BRIDGE NO. 3014A
DATE 09/13/2010	SHEET 93 92
CREW PDG, MD	

PREPARED BY: Garg Consulting Services, Inc.
ENGINEERS • CONSULTANTS • CONSTRUCTION MANAGERS

GENERAL NOTE
-SEE SHW1, SOUTH ELEVATION

② = REPAIRED

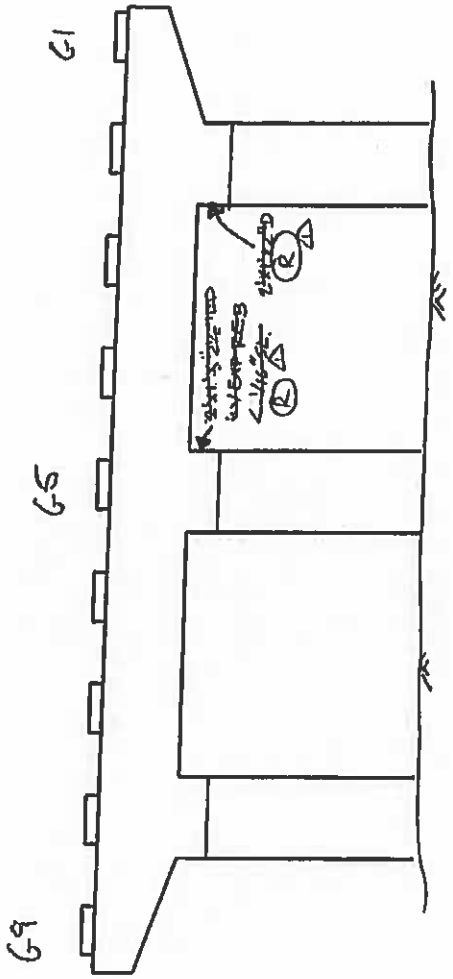

Pier 12 North Elevation West Half

LEGEND
- HOLLOW AREA
- SHALLOW REBAR
- SPALL AREA
- SPALL AREA WITH EXPOSED REBAR
- MAP CRACKS OR HAIRLINE MAP CRACKS
- HAIRLINE CRACKS (HLC) OR CRACKS (CR)
- HONEY COMB AREA
- SCALE AREA (HVY, MED, OR LT)

Revision	Date	Crew	Company	Revision	Date	Crew	Company
2	7/14/14	RFD, PHH	DEW				

FIELD NOTES

PREPARED BY: Garg Consulting Services, Intl.

PROJ. NO. 170-3013

DATE 09/10/2010

CREW PDG, MD

BRIDGE NO. 3014A

SHEET # 93

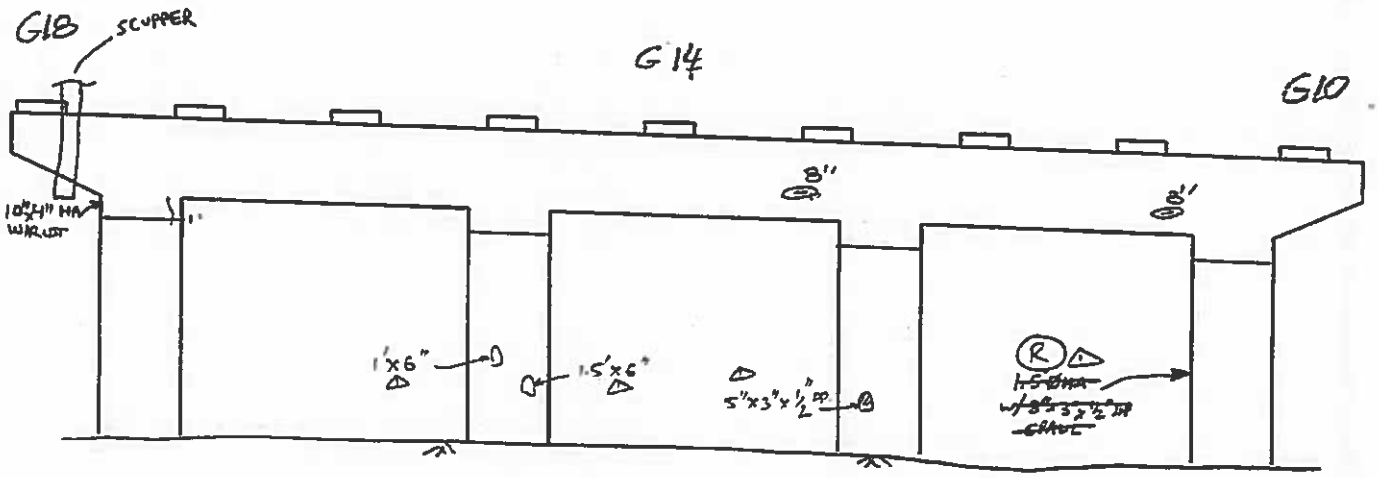

LEGEND

- HOLLOW AREA
- SHALLOW REBAR
- SPALL AREA
- SPALL AREA WITH EXPOSED REBAR
- MAP CRACKS OR HAIRLINE MAP CRACKS
- HAIRLINE CRACKS (HLC) OR CRACKS (CR)
- HONEY COMB AREA
- SCALE AREA (HVY, MED, OR LT)

(R) = REPAIRED

PIER 12 NORTH ELEVATION EAST HALF

Revision	Date	Crew	Company
	7/14/14	RFP, DHH	DEW

FIELD NOTES

PROJ. NO. 170-3013	BRIDGE NO. 3014A
DATE 09/14/2010	SHEET #5 94
CREW PDG, MD	

PREPARED BY: Garg Consulting Services, Inc. ENGINEERS • CONSULTANTS • CONSTRUCTION MANAGERS

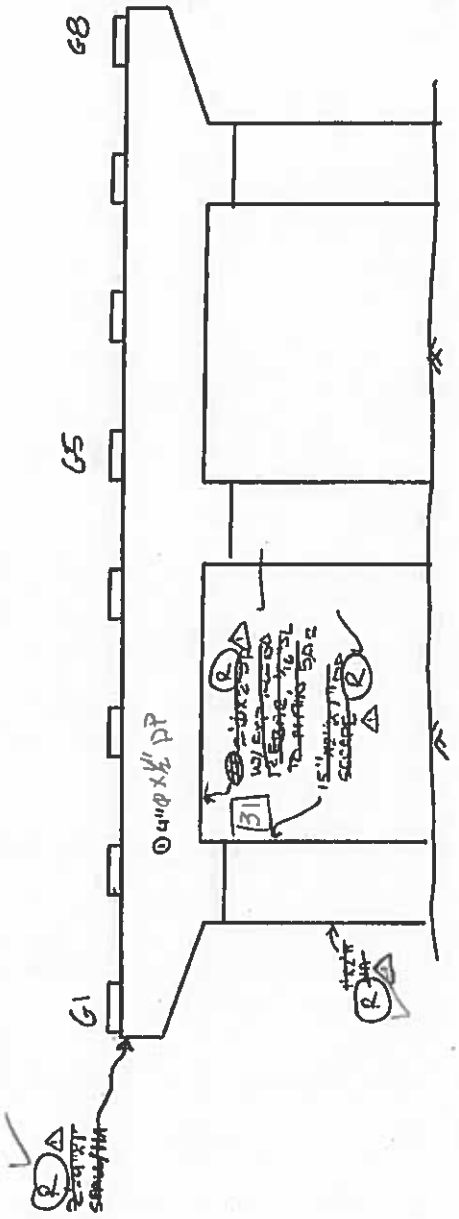

GENERAL NOTES.
-SEE PIER 1 SOUTH ELEVATION
- AREAS OF ACTIVE LEAK, ON PIER CAP.

(R) = REPAIRED

PIER 13 SOUTH ELEVATION WEST HALF

LEGEND
- HOLLOW AREA
- SHALLOW REBAR
- SPALL AREA
- SPALL AREA WITH EXPOSED REBAR
- MAP CRACKS OR HAIRLINE MAP CRACKS
- HAIRLINE CRACKS (HLC) OR CRACKS (CR)
- HONEY COMB AREA
- SCALE AREA (HVY, MED, OR LT)

Revision	Date	Crew	Company	Revision	Date	Crew	Company
1	9/4/12	PKG, AKC	GMZ				
2	6/23/2014	RFP, PHH	DEW				

FIELD NOTES

PROJ. NO. 170-3013	BRIDGE NO. 3014A
DATE 09/13/2010	SHEET 36 95
CREW PDG, MD	

PREPARED BY: Garg Consulting Services, Inc. ENGINEERS • CONSULTANTS • CONSTRUCTION MANAGERS

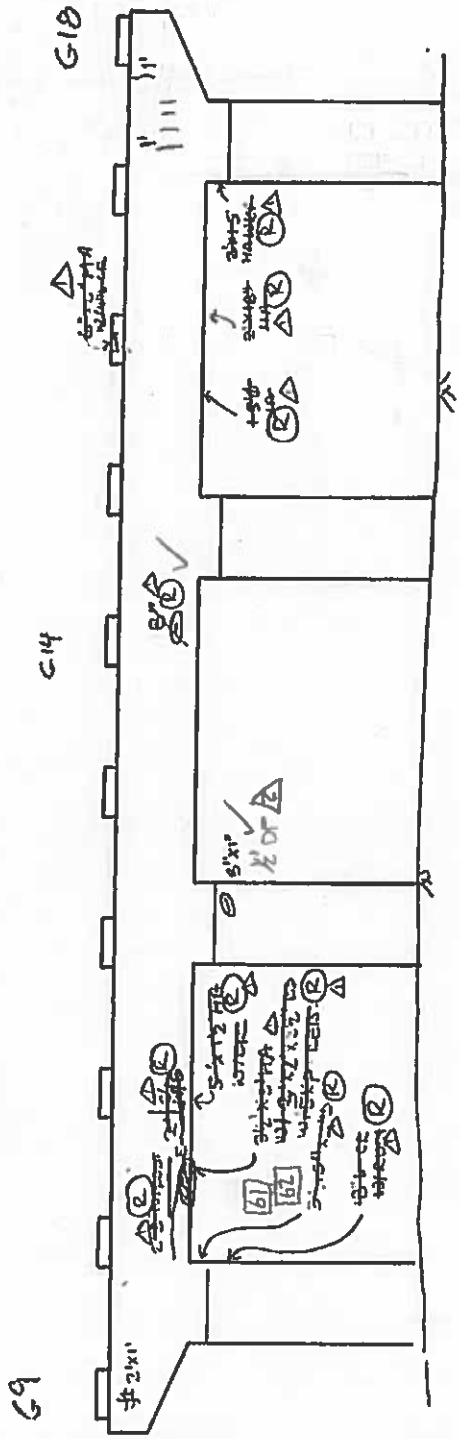

GENERAL NOTES
- SEE PIER 1 SOUTH ELEV SHEET
- AREAS OF ACTIVE LEAKAGE ON PIER CAP
(R) = REPAIRED

PIER 13 SOUTH ELEVATION EAST HALF

LEGEND
- HOLLOW AREA
- SHALLOW REBAR
- SPALL AREA
- SPALL AREA WITH EXPOSED REBAR
- MAP CRACKS OR HAIRLINE MAP CRACKS
- HAIRLINE CRACKS (HLC) OR CRACKS (CR)
- HONEY COMB AREA
- SCALE AREA (HVY, MED, OR LT)

Revision	Date	Crew	Company	Revision	Date	Crew	Company
1	9/4/12	PKG, AKC	GM2				
2	6/23/14	RFP, PHH	DEW				

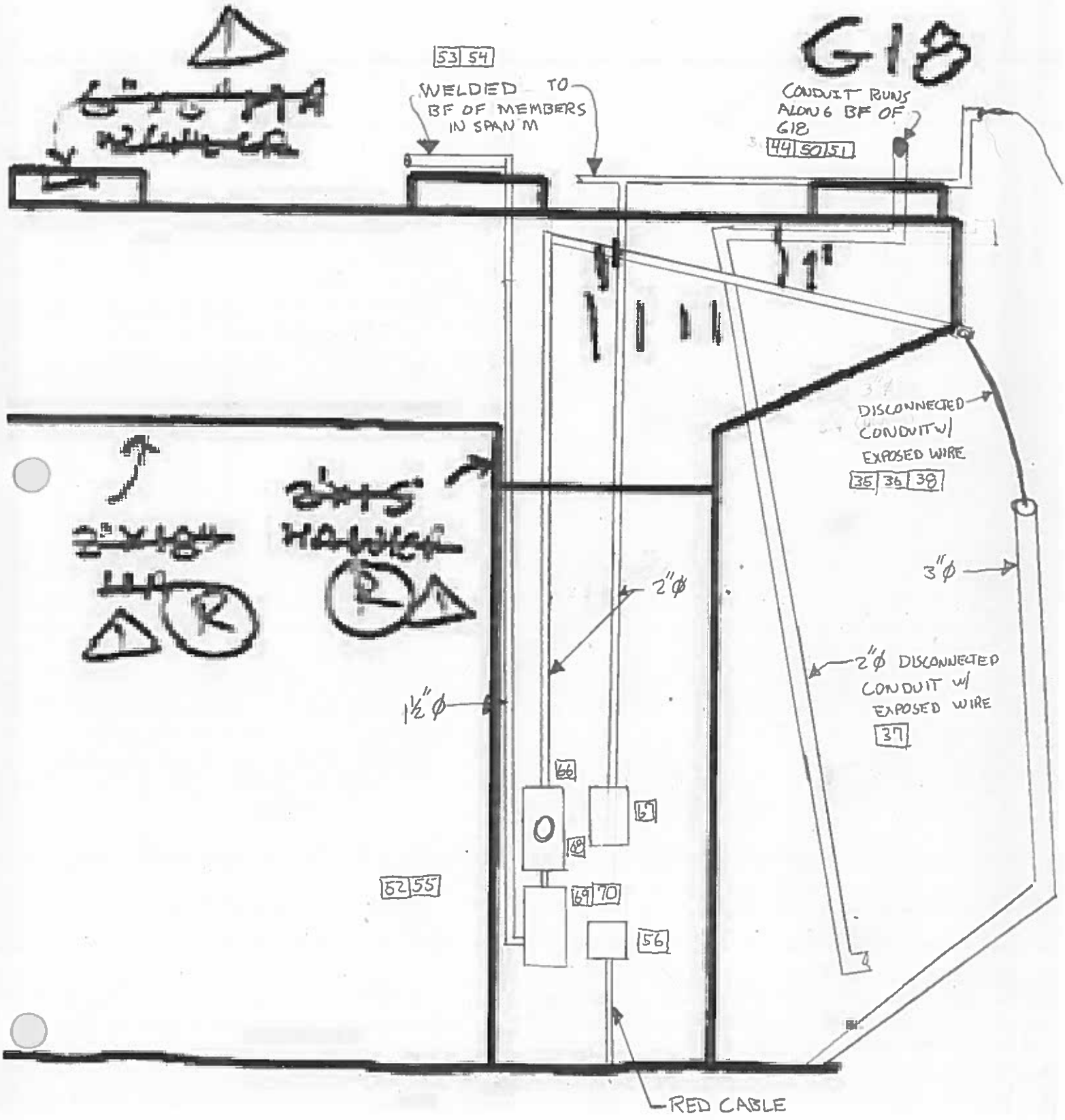

PIER 13 – SOUTH ELEVATION

FIELD NOTES

PREPARED BY: Garg Consulting Services, Inc. ENGINEERS • CONSULTANTS • CONSTRUCTION MANAGERS	PROJ. NO. 170-3013	BRIDGE NO. 3014A
	DATE 9/16/10	SHEET 97 96
	CREW PDG, MD	

Revision	Date	Crew	Company	Revision	Date	Crew	Company
1	9/11/12	PKG, AKC	GM2				
2	6/23/14	RFP, PHH	DEW				

FIELD NOTES

PROJ. NO. 170-3013	BRIDGE NO. 3014A
DATE 09/17/2010	SHEET 96 97
CREW PDG, MD	

PREPARED BY: Garg Consulting Services, Inc. ENGINEERS • CONSULTANTS • CONSTRUCTION MANAGERS

PIER 14 South Elevation

GENERAL NOTES
-SEE PIER 1, S. ELEVATION SHEET.

(R) = REPAIRED

LEGEND
- HOLLOW AREA
- SHALLOW REBAR
- SPALL AREA
- SPALL AREA WITH EXPOSED REBAR
- MAP CRACKS OR HAIRLINE MAP CRACKS
- HAIRLINE CRACKS (HLC) OR CRACKS (CR)
- HONEY COMB AREA
- SCALE AREA (HVY, MED, OR LT)

Revision	Date	Crew	Company	Revision	Date	Crew	Company
1	9/11/12	PKG, AKL	GM2				
2	6/23/14	PHH, RFP	DEW				

FIELD NOTES

PREPARED BY: Garg Consulting Services, Inc. ENGINEERS • CONSULTANTS • CONSTRUCTION MANAGERS	PROJ. NO. 170-3013	BRIDGE NO. 3014A
	DATE 09/15/2010	SHEET 29 98
	CREW PDG. MD	

Revision	Date	Drew	Company	Revision	Date	Drew	Company
2	7/3/14	RFP, PHH	DEW				

Appendix C
Inspection Photo Log and Thumbnails

Dewberry

PHOTO LOG

FORM BRI-13, REV 9/97

Bridge Information System

Image Inventory

Bridge No. 03014A Date: 6/23/14

Town: NEW HAVEN Photographer: PAH

Carried / Crossed: I-91 NB

Film Frame #	Image Description
1.	BRIDGE ID.
2	SPAN N, G-1 FIXED BRG. AT PIER 13.
3.	SPAN N, G-1 BOTT. FLG. COVER PL. CONFIG.
4,5	SPAN N, G-2 WEB END, WEST SIDE @ PIER 13.
6.	SPAN N, G-2 FIXED BRG. TYP. CONFIG. W/ PL'S OVER A.B. HOLES AT PIER 13.
7.	SPAN N, G-3, WEST SIDE @ PIER 13.
8.	SPAN N, G-3 EAST SIDE @ PIER 13.
9.	SPAN N, G-5 EAST SIDE @ PIER 13.
10.	SPAN N, BAY 6 END DIAPH @ PIER 13. TYP. IMP. RUST UP TO 1/2" BTWN. TOP OF CHANNEL & DECK HAUNCH.
11.	SPAN N, G-7 WEST SIDE @ PIER 13.
12.	SPAN N, G-8 WEST SIDE @ PIER 13.
13.	SPAN N, G-9 WEST SIDE @ PIER 13.
14.	SPAN N, G-9 EAST SIDE @ PIER 13.
15.	SPAN N, G-10 WEST SIDE @ PIER 13.
16.	SPAN N, G-10 EAST SIDE @ PIER 13.
17.	SPAN N, G-10 EAST SIDE B.F. W/ HVY. RUST ON UTILITY CONDUIT.
18.	SPAN N, G-2 EAST SIDE @ PIER 14 TYP. EXP. BRG.
19.	SPAN O, G-2 EAST SIDE @ PIER 14 TYP. FIX BRG
20	SPAN N, G-3 @ PIER 14, WEST SIDE.
21	SPAN N, G-3 EAST SIDE @ PIER 14.
22.	SPAN N, G5 WEST SIDE @ PIER 14.

Dewberry

PHOTO LOG

FORM BRI-13, REV 9/97

Bridge Information System

Image Inventory

Bridge No. 03014A Date: 6/23/14

Town: NEW HAVEN Photographer: PMH

Carried / Crossed: I-91 NB

Film Frame #	Image Description
23.	SPAN N, G-5 EAST SIDE @ PIER 14.
24,25	SPAN N, G-4 @ PIER 14. BOTT. PLG. & SOLE PL.
	TORCH CUT FOR CLEARANCE.
26.	SPAN N, G-6 EAST SIDE @ PIER 14.
27.	SPAN N, G-7 END @ PIER 14 TORCH CUT.
28.	SPAN N, G-8 END @ PIER 14, EAST SIDE
29.	SPAN N, G-9 END @ PIER 14, WEST SIDE
30.	SPAN N, G-9 END @ PIER 14, EAST SIDE
31.	SPAN N, G-10 END @ PIER 14, WEST ELEV.
32.	SPAN N, G-10 EAST ELEV. W/ 3"H LAM. RUST
	ALONG BOTT. OF WEB ALMOST FIL. OF BEAM.

Dewberry

PHOTO LOG

FORM BRI-13, REV 9/97

Bridge Information System

Image Inventory

Bridge No. 03014A Date: 06/23/2014

Town: NEW HAVEN Photographer: RFP

Carried / Crossed: SPANS N & O SUB STRUCTURE

Film Frame #	Image Description
33	REPAIRED AREAS PIER 13 NORTH UNDER G1-G3
34	REPAIRED CRACK PIER 13 NORTH UNDER G8
35	EAST SIDE OF PIER 13 WITH A 2"ϕ CONDUIT & 3"ϕ CONDUIT
	DISCONNECTED WITH EXPOSED WIRE
36	TOP VIEW OF 3"ϕ DISCONNECTED CONDUIT W/ EXPOSED WIRE @ PIER 13
	EAST SIDE
37	2"ϕ DISCONNECTED CONDUIT W/ EXPOSED WIRE @ PIER 13
	EAST SIDE
38+44	VIEW OF WIRES CONNECTED @ PIER 13 EAST END
39-41	"C" CLAMPS ALONG BOT. FLANGE OF G10 EAST FASCIA
42	"C" CLAMPS ON 1½"ϕ CONDUIT FOR UNDER SIDE LIGHT BTWN
	G5 & G6 IN SPAN N
43	SCUPPER @ SPAN N, PIER 13, BTWN G9 & G10
45	TYP COND. OF UNDER BRIDGE LIGHT IN SPAN 'N'
46	TYP SHORT WEEP PIPE IS SPAN 'N', WEEP PIPE BTWN
	BEAMS 1 & 2 SHOWN
47	TYP COND OF PAINT G1-G5 SOUTH END
48	TYP COND. OF PAINT G6-G10 SOUTH HALF
49	HEAVY RUST AREA WITH 3'L x 6" PERF IN SIP FORM
	@ END DIAPH BTWN G2-G3 @ PIER 13
50+51	PIER 13 SOUTH ELEV EAST END UNDER G18 GENERAL VIEW
	OF MULTIPLE CONDUITS
52	UTILITY BOXES ATTACHED TO PIER 13 SOUTH UNDER
	G10

Dewberry

PHOTO LOG

FORM BRI-13, REV 9/97

Bridge Information System

Image Inventory

Bridge No. 03014A Date: 6/23/2014

Town: NEW HAVEN Photographer: RFP

Carried / Crossed: SPANS M & O SUBSTRUCTURE / UTILITY

Film Frame #	Image Description
53 +54	2"ø + 1½ø CONDUITS ATTACHED TO BOT. FLANGES OF SPAN 'M'
55 + 56	CONDUITS @ PIER 13 SOUTH ELEV @ EAST END
57 – 59	UTILITY CABLES ATTACHED BOT. FLANGES OF SPAN 'M' FOR STATE ST. CONST. PROJ.
60	REPAIRED AREA OF PIER 13 UNDERSIDE OF CAP
	BELOW G15 – G17 OF SOUTH ELEV.
61 + 62	REPAIRED AREA OF PIER 13 UNDERSIDE OF CAP
	BELOW G7 & G8 OF SOUTH ELEV.
63	REPAIRED AREA OF PIER 13 SOUTH ELEV @ UNDERSIDE OF
	CAP & ITERIOR COLUMN FACE BELOW G2
64	THE WEST ENDS OF PIER 13 NORTH ELEV WEST HALF (BR. 03014C)
65	THE EAST END OF PIER 13 NORTH ELEV WEST HALF (BR 03014C)
66-70	CLOSE UP VIEW OF UTILITY BOXES ATTACHED TO PIER 13
71	SOUTH ELEV. AT EAST END
72	TEMP UTILITY POLE FOR STATE ST CONST. PROJ.
73	BRIDGE ID
74	WEST ELEV. OF BEAM 1 SPAN O 1/16" PITTING LOSS TOP OF BOT. FLANGE
	ALSO NOTE SORFACE RUST WEB W/ NO SECTION LOSS
75	CLOSE UP VIEW PITTING LOSS TO TOP OF BOT FLANGE
76	G2 EAST SIDE @ N. ABUT, SPAN O
77	EXP BEARING @ BEAM 2, N. ABUT, SPAN O
78	END DIAPH @ N. ABUT BTWN, G5 – G6 – SPAN O
79	SPAN O, G10 EAST ELEV. EXHIBITS 100% PAINT LOSS &
	SURFACE RUST

Dewberry

PHOTO LOG

FORM BRI-13, REV 9/97

Bridge Information System

Image Inventory

Bridge No. 03014 A Date: 6/23/2014

Town: NEW HAVEN Photographer: RFP

Carried / Crossed:

Film Frame #	Image Description
80	TYPICAL PAINT COND. OF G9, SPAN 0 EAST ELEV.
81	TYPICAL PAINT COND OF G1-G5, SPAN 0 LOOKING WEST
82	TYPICAL PAINT COND. OF G6-G10 SPAN 0 LOOKING EAST
83	TYPICAL PAINT COND. OF G7, SPAN 0, WEST ELEV.
84	TYPICAL PAINT COND OF G8, SPAN 0, WEST ELEV.
85	TYPICAL PAINT COND OF G9, SPAN 0, WEST ELEV
6/30 J 86.	TYPICAL BEARING AT SOUTH ABUT SPAN A, G8
	WEST ELEV.
(2) 87	WEST ELEV. OF G8 @ S. ABUT
(3) 88	EAST SIDE OF G13 @ S. ABUT TO DF WEB TIPPED
	EAST 7/16" OVER 2'-0"
(4) 89	TYPICAL BEARING @ PIER 1 @ G11, SPAN A
(5) 90	WEST ELEV. OF G11 @ PIER 1 SPAN A
(6) 91	CLOSE UP VIEW OF 2'-0" LONG x 3" HIGH x 3/16" DP LOSS
	@ G11, PIER 1, SPAN A IN BOT. OF WEB
(7) 92	G15, SPAN B, PIER 2 TIPPED WEST 7/16" OVER 2'
(8) 93	TYPICAL END G12, PIER 2 EAST SIDE, SPAN B
(9) 94	WEST SIDE OF G17, SPAN C, PIER 2
(10) 96	3/4" DP IMPACTED RUST & 3/16" DP x 3'x3" WIDE SECTION LOSS
	IN END DIAPH BTWN G17-G16
(11) 96	WEST SIDE OF G17 @ P3, SPAN 3

Dewberry

PHOTO LOG

FORM BRI-13, REV 9/97

Bridge Information System

Image Inventory

Bridge No. 03014A Date: 7/1/14

Town: NEW HAVEN Photographer: PMM

Carried / Crossed:

Film Frame #	Image Description
(1-3) 97-99	TYPICAL TOP OF DECK
(4) 100	G7 @ P3 IN SPAN D EXHIBITS ABRASION RUST AND
	MOVEMENT UNDER LIVE LOAD
(5) 101	4½" CONDUIT
(6) 102	G7 @ P4 WITH KEEP ANGLES TYPICAL @ P4
(7&8) 103+104	G5 @ P4 SPAN D 2'4"W x 5"H x 2½" DP SPALL
	IN PEDESTAL AND 2'x2' HA WITH RUST STAINS
	IN PH CAP
(9) 105	DISCONNECTED DOWN SPOUT IN MID SPAN OF SPAN D
	NEXT TO G11. ALSO TYPICAL SHORT WEEP PIPE
(10) 106	COND OF SIP FORM @ END DIAPH @ P4 BTWN G10 & G9
	IN SPAN E
(11) 107	LARGE SPALL UNDER G9 & G7, P5 SOUTH ELEV.
(12) 108	SPALL @ G11, P7 SPAN G
(13) 109	SPALL @ G10, P7 SPAN G
(14+15) 110-111	G7 @ P8, SPAN H
7/3 J (16) 112	TYPICAL COND BKY END DIAPH

Dewberry

PHOTO LOG

FORM BRI-13, REV 9/97

Bridge Information System

Image Inventory

Bridge No. 03014A Date: 7/8/2014

Town: NEW HAVEN Photographer: PHH

Carried / Crossed:

Film Frame #	Image Description
(1) 113	CLOGGED SCUPPER IN SPAN A @ PIER 1 (WEST SIDE)
(2+3) 114+115	WEST ELEVATION OF BRIDGE
(4) 116	1/4" X 6" LONG SECTION OF THE EDGE OF BOT. FL REMOVED
(5) 117	HEAVY RUST + NO PVC PIPE AT SCUPPER @ SPAN B, P2
(6) 118	WEST SIDE
(7-9) 119-121	CRACKED WELD @ BEAM 1, SPAN B, @ P2, TOP OF SCUPPER CONNECTION PLATE
(10-11) 122+123	SPAN B, G7, WEST ELEVATION, 1/8" DP SL
(12) 124	PIER 3, SOUTH ELEV.
(13) 125	PIER 2, NORTH ELEV.
(14+15) 126+127	SPAN C, BEAM 1 @ PIER 3 - TOP OF WEB TIPPED 1/2" WEST OVER 2'.
(16) 128	PIER 1 SOUTH ELEV.
(17) 129	PIER 2 SOUTH ELEV.
(18) 130	PIER 1, BAY 3, SPAN B, END DIAPH.
(19+20) 131+132	PIER 1 NORTH ELEV.
(21) 133	RUSTED SCUPPER @ SPAN C P2 WEST CURB

Dewberry

PHOTO LOG

FORM BRI-13, REV 9/97

Bridge Information System

Image Inventory

Bridge No. 03014A Date: 7/9/2014

Town: NEW HAVEN Photographer: PHH

Carried / Crossed:

Film Frame #	Image Description
(1) 134	CLOGGED SCUPPER @ P , SPAN J, WEST SIDE
(2) 135	G 3, SPAN E VIEW FROM SPAN F OF BEARING
3) 136	EXPANSION BEARING @ P5
(3) 136	FIXED BEARING SPAN E B-3, P5, NOTE IMPACTED
	RUST
(4) 137	P7 SOUTH ELEV WEST END UNDER G1 W/
	10'L x 1/8"W CRACK W/ HA, EFFLO & RUST STAINS
(5) 138	P8 SOUTH ELEV WEST END
(6+7) 139+140	PIER 7 NORTH ELEV., NOTE 3'x 2.5' x 2½" DP SPALL W/
	RUSTED THRU REBAR
(8+9) 141+142	SCUPPER PIPE CONNECTED TO NORTH ELEV. OF
	PIER 7.
(10+11) 143+144	HEAVY RUST ON SCUPPER PIPE @ SPAN H, G1 @
	PIER 7

Dewberry

PHOTO LOG

FORM BRI-13, REV 9/97

Bridge Information System

Image Inventory

Bridge No. 03014 A Date: 07/10/2014

Town: NEW HAVEN Photographer: RFP, PHH

Carried / Crossed:

Film Frame #	Image Description
(1+2) 145+146	SPAN I, BEAM 4, EAST ELEV AT P8 WITH 2'-6"L x 5"H x 3/16" DP SECTION LOSS AT BOT. OF WEB, 3'L x FW x 1/8" DP SECTION LOSS TO TOP OF BOT. FLANGE, AND THE END DIAPH. CONN PL HAS AN 3" x FW AREA w/ 3/16" REM.
(3) 147	CLOSE UP VIEW OF LOSS ON CONN. PL, ALSO NOTE THAT THE BOT OF PL IS BENT 1/8" OVER 4".
(4) 148	SPAN I, BEAM 1 @ P8, WEB BOWED 1/4" WEST OVER FH
(5+6) 149+150	MISSING WELD AT TOP OF CONN PL AT FIRT INT DIAPH FROM P9 IN SPAN I, BEAM 3
(7) 151	TYPICAL CONDITION OF BEAM 1 @ SPAN I, PIER 9
(8+9) 152+153	TYPICAL CONDITION OF SCUPPER PIPE CONN. TO THE SOUTH ELEV OF PIER 9 FROM SPAN 5
(10) 154	BEAM 1, SPAN I @ P9 EAST ELEV. WITH 1'L x 12"H x 1/8" DP SECTION LOSS IN BOT OF WEB OF SUPPORT BRACKET, ALSO NOTE 1/2" BOW OVER 2' IN VERT. STIFFENER OF SUPPORT BRACKET.
(11) 155	CLOSE UP VIEW OF BEND IN VERT STIFF OF SUPPORT BRACKET.
(12) 156	SPAN 3, BAY 2 - UNDER BRIDGE LIGHT DISCONNECTED FROM CONDUIT
(13) 157	PIER 9, NORTH ELEVATION 12'L x 1'H x 6" DP ON PIER FACE BETWEEN 64 & 65

Dewberry

PHOTO LOG

FORM BRI-13, REV 9/97

Bridge Information System

Image Inventory

Bridge No. 03014 A Date: 07/10/2014

Town: NEW HAVEN Photographer: RFP, PHH

Carried / Crossed:

Film Frame #	Image Description
(14) 158	PIER 9, NORTH ELEV. W/ 4'x2' HA ON TOP OF CAP &
	4'Lx6"H HA ON CAP FACE
(15-17) 159-161	SPAN J @ PIER 9, G6 - SOLE PL OVERHANGS MASONRY PL
	1¼" ON WEST SIDE & ¼" ON EAST SIDE. THE MASONRY IS
	SMALLER THAN SOLE PL

Dewberry

PHOTO LOG

FORM BRI-13, REV 9/97

Bridge Information System

Image Inventory

Bridge No. 03014A Date: 07/14/14

Town: NEW HAVEN Photographer: RFP, PHH

Carried / Crossed:

Film Frame #	Image Description
162 & 163	SPAN M @ P13 UTILITY CONDUITS WELDED TO BOT. FLANGE @ G17 (1½" & 1" CONDUITS)
164	G11 @ SPAN M @ P13 BEARING OVER HANGS PEDESTAL 1"L FOR A WIDTH OF 4"
165	CONDITION OF UNDERSIDE BTWN G8 & G7 @ P13
166 + 167	CRACKED WELD @ TOP OF 1ST INTERIOR DIAPHRAGM CONN. @ FROM P12 IN SPAN M ON B12
168	END DIAPH. @ P12 BTWN G7 & G8, ⅛" REMAINING MAX ON ALL SECTION & ¾" Ø PERF IN WEB
169	UNDERSIDE OF DECK BWTN G7 + G8 WITH STP FORM EXHIBITING 100% SECTION LOSS

Dewberry

PHOTO LOG

FORM BRI-13, REV 9/97

Bridge Information System

Image Inventory

Bridge No. 03014A Date: 7/15/14

Town: NEW HAVEN Photographer: RFP, PHH

Carried / Crossed:

Film Frame #	Image Description
170	SPAN M, G11, 1/4" BOW WEST @ BEAM END, TAKEN FROM SPAN L
171	SPAN L, G16, FIXED BEARING @ P11
172 + 173	SPAN K, G14, @ P11 w/ 6'-6"L x 7"H x 3/8" DP S.L. (B)
174	2½"L x ¾"H PERF IN WEB G9 @ P10, SPAN J
175	¾" BOW IN BOTTOM OF G9 WEB @ P10, SPAN J
176 + 177	(3) PERFS IN BOTTOM OF G9 WEB NEAR P10 UP TO 3½"L x 1"H
178	BROKEN WELD & BOLTED CONN. @ BOT. OF END DIAPH. CONN TO G9 @ P9

03014A-179

03014A-001

03014A-002

03014A-003

03014A-004

03014A-005

03014A-006

03014A-007

03014A-008

03014A-009

03014A-010

03014A-011

03014A-012

03014A-013

03014A-014

03014A-015

03014A-016

03014A-017

03014A-018

03014A-019

03014A-020

03014A-021

03014A-022

03014A-023

03014A-024

03014A-025

03014A-026

03014A-027

03014A-028

03014A-029

03014A-030

03014A-031

03014A-032

03014A-033

03014A-034

03014A-035

03014A-036

03014A-037

03014A-038

03014A-039

03014A-040

03014A-041

03014A-042

03014A-043

03014A-044

03014A-045

03014A-046

03014A-047

03014A-048

03014A-049

03014A-050

03014A-051

03014A-052

03014A-053

03014A-054

03014A-055

03014A-056

03014A-057

03014A-058

03014A-059

03014A-060

03014A-061

03014A-062

03014A-063

03014A-064

03014A-065

03014A-066

03014A-067

03014A-068

03014A-069

03014A-070

03014A-071

03014A-072

03014A-073

03014A-074

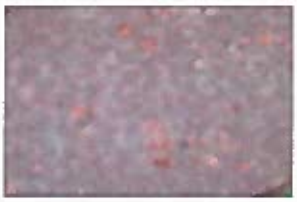
03014A-075

03014A-076

03014A-077

03014A-078

03014A-079

03014A-080

03014A-081

03014A-082

03014A-083

03014A-084

03014A-085

03014A-086

03014A-087

03014A-088

03014A-089

03014A-090

03014A-091

03014A-092

03014A-093

03014A-094

03014A-095

03014A-096

03014A-097

03014A-098

03014A-099

03014A-100

03014A-101

03014A-102

03014A-103

03014A-104

03014A-105

03014A-106

03014A-107

03014A-108

03014A-109

03014A-110

03014A-111

03014A-112

03014A-113

03014A-114

03014A-115

03014A-116

03014A-117

03014A-118

03014A-119

03014A-120

03014A-121

03014A-122

03014A-123

03014A-124

03014A-125

03014A-126

03014A-127

03014A-128

03014A-129

03014A-130

03014A-131

03014A-132

03014A-133

03014A-134

03014A-135

03014A-136

03014A-137

03014A-138

03014A-139

03014A-140

03014A-141

03014A-142

03014A-143

03014A-144

03014A-145

03014A-146

03014A-147

03014A-148

03014A-149

03014A-150

03014A-151

03014A-152

03014A-153

03014A-154

03014A-155

03014A-156

03014A-157

03014A-158

03014A-159

03014A-160

03014A-161

03014A-162

03014A-163

03014A-164

03014A-165

03014A-166

03014A-167

03014A-168

03014A-169

03014A-170

03014A-171

03014A-172

03014A-173

03014A-174

03014A-175

03014A-176

03014A-177

03014A-178