STRUCTURE NO. 03311

INTERSTATE-84 WB
over
RT 72 NB, RR & RT 372
PLAINVILLE

Routine & Special Inspection
on
4/22/2014

Inspected by GM2 Oncall - 28
for Area 5

TEAM:	Forwarded to TE3	Steve Keedy	Date	8/4/2014
TE3:	Reviewed by TE3	Steve Keedy	Date	8/7/2014
	BMM Required	Yes		
	Town Bridge	No		
	Rating <= 5 (Items 58,59,60 or 62)	Yes		
	Rating Change 2 or More Values	No		
	Forwarded to Supervisor	Steve Keedy	Date	8/7/2014
	Forwarded to "To Be Copied Drawer"	☐	Date	
	Date BRI-19 Entered	8/7/2014		
SUPERVISOR:	Reviewed by Supervisor	Steve Keedy	Date	8/7/2014
SUPPORT:	Date Copies Made	8/6/14	BMM No	14-556
	Scanned By:		Date Scanned		PDF Box No	

NBI: Yes

NHS: Yes

BRIDGE SAFETY INSPECTION

STATE PROJECT NO. 170-3224

RECEIVED
AUG 04 2014
CONNECTICUT - DOT
BRIDGE SAFETY & EVALUATION

BRIDGE NO. 03311
I-84 WESTBOUND
OVER
ROUTE 72 WESTBOUND, ROUTE 72, PAN AM RAILROAD
PLAINVILLE, CONNECTICUT

ROUTINE AND SPECIAL INSPECTION
APRIL 22, 2014
(LAST DAY OF INSPECTION JUNE, 2014)

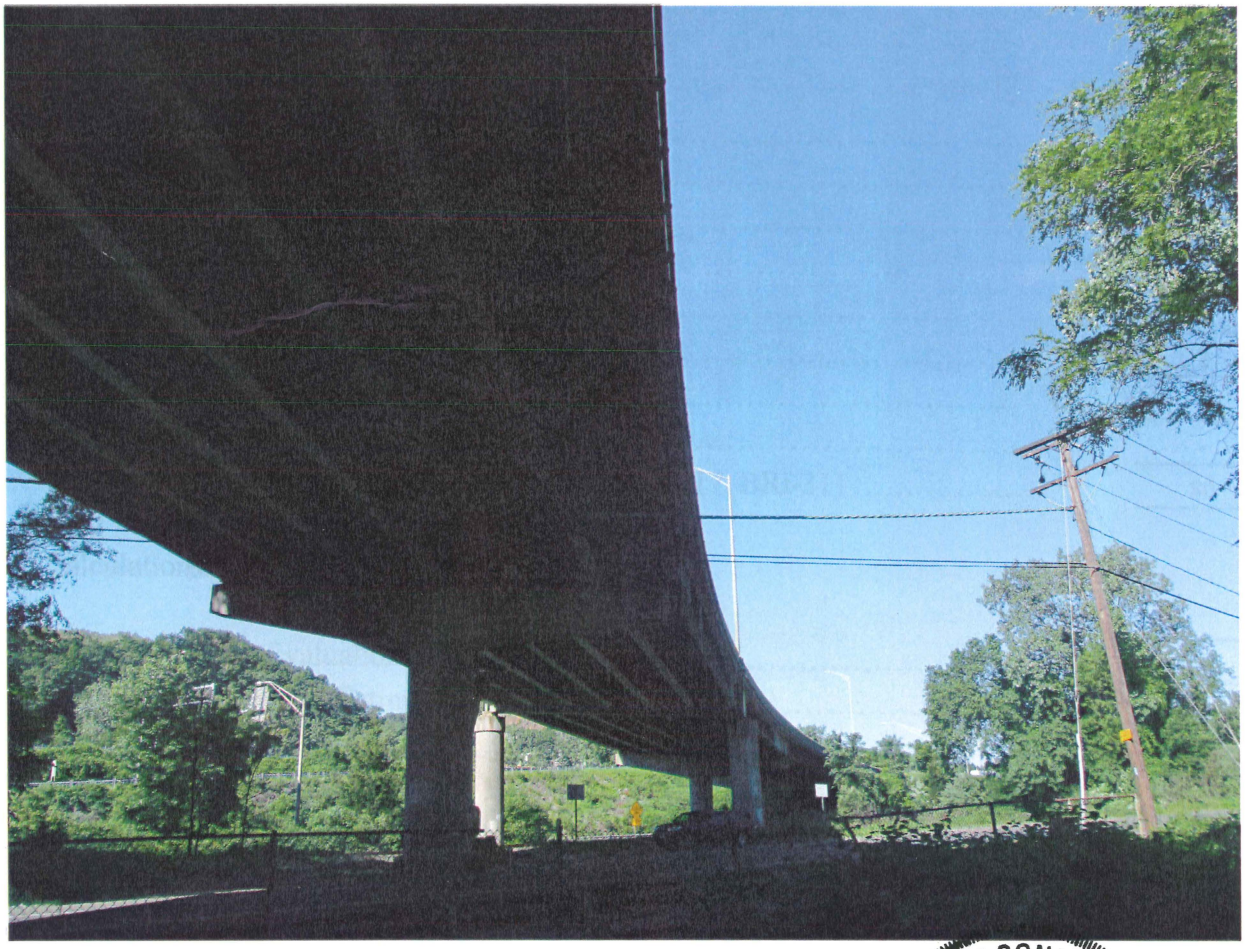

Prepared By:
GM2 Associates, Inc.
115 GLASTONBURY BLVD.
GLASTONBURY, CT 06033

STATE OF CONNECTICUT
MADAN M. GUPTA
No. 14052
LICENSED
PROFESSIONAL ENGINEER

Madan M. Gupta 8/1/14

LOCATION MAP

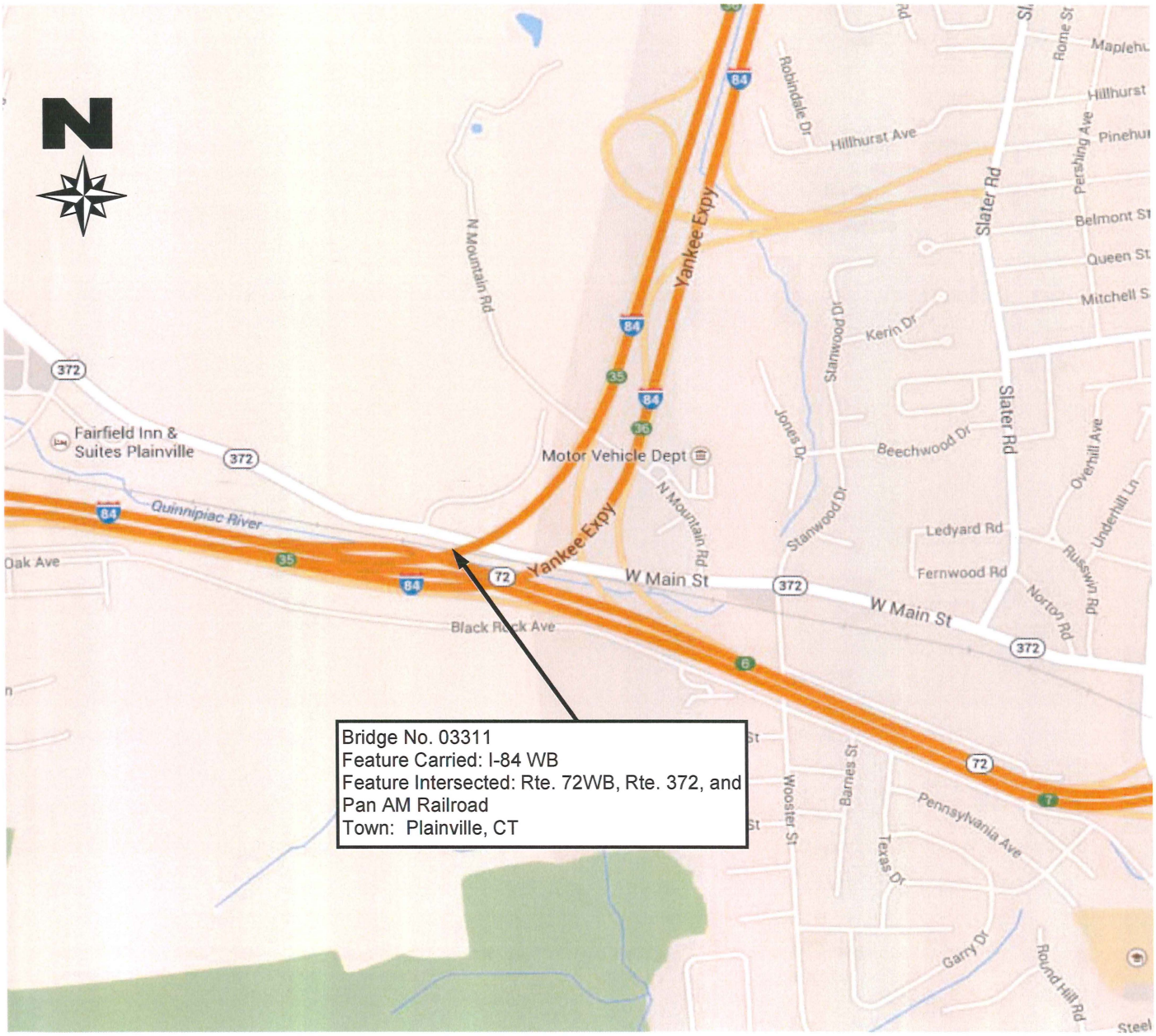

EXECUTIVE SUMMARY

Bridge No. 03311 carries Interstate 84 Westbound over Route 72 WB, Route 372 and Pan AM Railroad in Plainville, CT. This six span bridge consists of steel multi-girders and a reinforced concrete deck. The superstructure is supported by reinforced concrete abutments, post-tensioned concrete hammerhead piers and one pier with a steel pier cap with fixed hinge web connections. The bridge was constructed in 1969. The overall length is 663 feet and the curb-to-curb width is 51.9 feet. According to information on file with Connecticut Department of Transportation, the bridge has an inventory load rating capacity of 52 tons for AASHTO HS vehicle. Due to the section losses present in the steel a re-analysis of this structure may be warranted. During this routine and special inspection completed in June of 2014 the bridge was found to be in poor condition.

The deficiencies found on the bridge are as follows:

Deck: (Rated - 6)

1. There are hollow areas at the underside of deck and the concrete pier caps over the roadway as follows:
   - Span 1, underside of Pier 1 joint in Bay 2 near Girder G2: 1' x 1' hollow area, (Route 72 WB left lane).
   - Span 5, Girder G7 haunch at Pier 5: 1' long hollow haunch, (Route 372 WB shoulder/ lane).

   These conditions have been previously submitted for repair under Item No. 1 of BMM No. 12-380 and have not been addressed.

2. The asphaltic plug joints exhibit adhesion separation cracks up to 24' long and open up to 3" wide with worst noted in the shoulders. There are depressed areas up to 2" deep at Pier 2, Pier 3 and Pier 4 joints and heaving up to 1" high right shoulder of Pier 2 joint. All the joints have up to wheel rutting up to 3/4" deep and foam backer rods are visible from below at some joints. Evidence of joint leakage was noted at all locations below. There is a new BMM to address these conditions.

Superstructure: (Rated - 4)

1. The guided pot expansion and fixed bearings exhibit areas of light to heavy rust with laminar rust at some locations. Few expansion bearings have impacted rust up to 1/8" thick between the sole plates and bottom flanges. These conditions have been previously submitted for repair under Item No. 5 of BMM No. 06-222 and have not been addressed.
2. The sliding expansion bearing for the cap girder at Pier 3 exhibits light rust, up to 1/8" impacted rust between plates, backed off anchor bolt nuts and gaps up to 1/4" high below the masonry plate resulting in 16% loss of bearing area. This condition has been previously submitted for repair under Item No. 3 of BMM No. 10-577 and has not been addressed.
3. The fixed bearing for the cap girder at Pier 3 exhibits impacted rust between the curved sole plate and the top of the masonry plate. There is one missing anchor bolt nut, one nut backed off and up to 75% section loss on the nuts. This condition has been previously submitted for repair under Item No. 7 of BMM No. 06-222 and has not been addressed.
4. The girders exhibit areas of heavy rust with laminar rust, particularly along the north fascia girder, as well as adjacent to the fixed pin assemblies at Pier 3. Girder webs exhibit section loss up to 1/4" deep at the bearings and an isolated location of 1/2" diameter rust hole in the Girder 1

web in Span 2 at Pier 1. The stiffeners exhibit section losses with rust holes up to 5" wide x 3" high at the top and bottom. Section loss for shear in the girder webs typically do not exceed 10%. The section loss for web bearing area (buckling) is typically less than 25% except for Girder G1 at Pier 1 in Span 2 up to 37%, Girder G1 in Span 3 at Pier 2 up to 31% and Girder G1 in Span 5 at Pier 5 up to 29%. There are areas of section losses in the bottom flange of Girder G1 resulting up to 9.8% loss in high tension zones. The top flange of Girder G1 exhibits areas of heavy rust with laminar rust with up to 3/16" deep section loss resulting in ±8% loss near mid-span in Span 5. These conditions have been previously submitted for repair under Item No. 5 of BMM No. 06-222 and have not been addressed.

5. The fixed hinges exhibit up to 3/4" impacted rust between the hinge plates and webs, isolated locations with gaps up to 3/8" between the hinge plates and webs at the locations where there is no impacted rust. Hinge plates have section losses up to 3/16" deep at random locations, typically adjacent to the pin nuts and near the top of the random hinge plates. Section loss in web for shear is typically less than 10% except for two locations at Pier 3 (Span 3, Girder G3 with 11% loss for shear and Span 4, Girder G1 with 25% loss for shear). The steel cap girder flanges at Pier 3 exhibits areas of section loss up to 1/16" deep away from the supports (<5% section loss) and deeper losses near the supports (non-critical zones). There are isolated locations of 1.5' x 3" x 3/16" deep section loss along the base of the web and section loss up to 1/8" deep in the bearing stiffeners resulting in less than 5% web loss for shear and 8% loss in web bearing area (buckling). These conditions have been previously submitted for repair under Item Nos. 5 and 6 of BMM No. 06-222 and have not been addressed.
6. Two of three bolts are loose at 2nd intermediate cross frame connection to Girder G3 in Span 1. This condition has been previously submitted for repair under Item No. 3 of BMM No. 06-222 and has not been addressed.
7. The lower horizontal welds and/or lower vertical gusset plate welds are cracked, broken, missing, short welds, or welds that have no fusion at the cross frame lower angle to stiffener connections at a total of 32 locations throughout the structure, five of which were found new this inspection. There are other welds at random locations that are sloppy or have poor fusion. These conditions have been previously submitted for repair under Item No. 2 of BMM No. 06-222 and have not been addressed.

Substructure: (Rated - 5)

1. The north end face of the West Abutment footing is exposed due to erosion for approximately 7.5' long x up to 23" high and there is a full height x 1/4" wide crack in the footing below the wingwall/abutment junction. The Northwest Wingwall footing is also exposed up to full height x 30' long and is undermined approximately 3' long x 9" high x 6.5' deep, exposing piles. This condition has been previously submitted for repair under Item No. 1 of BMM No. 10-577 and has not been addressed.
2. The post tensioned concrete pier caps exhibit horizontal, vertical, diagonal cracks open up to 1/8" wide with and without efflorescence and areas of hairline map cracking up to 3' x 3' with and without efflorescence. There are a few spalls up to 8" x 4" x 2" deep with and without exposed rebar and hollow areas up to 1' x 1.5'. There are hollow areas up to full height x 3' over the travel ways as follows:
   - Pier 2 east face over Route 72 WB right lane (not loose).
   - Pier 4 east face and north faces over/adjacent to Route 372 EB shoulder (not loose).

   These conditions have been previously submitted for repair under Item No. 2 of BMM No. 12-380 and have not been addressed.

3. There are areas of heavy accumulation of concrete debris and pigeon debris on top of the pier caps. This condition has been previously submitted for repair under Item No. 1 of BMM No. 06-222 and has not been addressed.

Bridge Number 03311

Inspected By: S.DONTULA & AMIT KC

Sufficiency Rating 63.61
Previous Inspection Date 4/11/2012

BS&E Received ☐ Data Entry By: S.Keedy
Copies Made ☐ Data Entry Date: 8/7/14

STATE OF CONNECTICUT
DEPARTMENT OF TRANSPORTATION
BRIDGE SAFETY & EVALUATION

STRUCTURE EVALUATION

SHEET 1 OF 2 FORM BRI-19 REV 10/00

SHEET_____ OF_____

90) Inspection Date	Inspection Team	91) Frequency	Class:
04 22 14	21 28	24	03
Indepth Insp	Deck Survey	Access	Flagman
2/15/2006	1/1/1900	24	99 *

RED FLAG ☐

CRITICAL FEATURE INSPECTIONS

	Type	Frequency	Team	Date	
Fracture:	J 5	24 24	20 28	4/11/2012	6/7/14
Uwater:					
Special:	A A-	12 12	5 24	5/31/2013	6/7/14

IDENTIFICATION

Bridge Name
Town Name PLAINVILLE Town Code 60120
5) Inventory Route:
A) Record Type 1 D) Route Number 00084
B) Signing Prefix 1 Interstate High E) Directional Suffix 4 West
C) Level of Service 1 Mainline
6) Feature Intersected RT 72 NB, RR & RT 372
7) Facility Carried: INTERSTATE-84 WB
9) Location I-84/RT 72 INTERCHANGE 11
11) Milepoint 50.21 Miles
16) Latitude 41deg 40 min 12.00 sec deg min sec
17) Longitude 72deg 49 min 30.00 sec deg min sec
98) Border Bridge:
A) State Code B) Percent Responsibility %
C) Border Town Name
99) Border Bridge Structure No

STRUCTURE TYPE AND MATERIAL

43) Structure Type, Main:
A) Material 3 Steel B) Design Type 2 Stringer/Multi-beam o
44) Structure Type, Approach:
A) Material 0 Other B) Design Type 0 Other
45) Number of Spans, Main Unit 6
46) Number of Approach Spans 0
107) Deck Structure Type 1 Concrete Cast-in-Place
108) Wearing Surface/Protective System:
A) Type of Wearing Surface 6 Bituminous
B) Type of Membrane 2 Preformed Fabric
C) Type of Deck Protection 0 None

AGE AND SERVICE

27) Year Built 1969 106) Year Reconstructed
42) Type of Service:
A) On 1 Highway B) Under 8 HIGHWAY-WATER
28) Number of Lanes:
A) On 3 B) Under 4
29) Average Daily Traffic 37900 37400 Half ADT?: -Yes Y
109) Percent Truck 14% 14
30) Year of ADT 2011 2013
19) Bypass, Detour Length 1miles

GEOMETRIC DATA

48) Length of Max Span 109ft
49) Structure Length 663ft
50) Curb or Sidewalk Widths:
A) Left 0.0ft B) Right 0.5ft
51) Brg Rdwy width,curb-curb 51.9ft
52) Deck Width, Out-Out 55.5ft
32) Approach Roadway Width 51ft
33) Bridge Median 1 Open Median
Deck Area 36789 sqft
34) Skew Angle 0deg
35) Structure Flared 0
10)Inv. Rte. Min. Vert Clearance 99ft 99in
47) Log Inv. Rte. Total Horiz Clr.: 51.9ft 0.0 ft ✓
47) RLog Inv. Rte. Total Horiz. Clr.: 51.9ft
53) Min Vert Clearance Over Bridge 99ft 99in ✓
54) Min Vert Under Clearance H Ref 15ft 11in Ref
55) Min Lat Under Clearance on Right H Ref 13.2ft Ref 13.4 ft
56) Min Lat Under Clearance on Left 7.0ft ✓

BRIDGE COMMENTS

* PanAm Railroad Flagman required for inspection of Pier 3, Span 3 & Span 4.

STRUCTURE EVALUATION

SHEET 2 OF 2 FORM BRI-19 REV 10/00

SHEET_____ OF_____

Bridge Number	03311	NBIS Length	
Town Name	PLAINVILLE	Yes 663	
Facility Carried	INTERSTATE-84 WB		
Feature Crossed	RT 72 NB, RR & RT 372		

Inspected By: S. DONTULA & AMIT K C

CLASSIFICATION

112) NBIS Bridge Length	Yes	
104) Highway System	1	On System
26) Functional Class	11	Urban Principal Arterial - Interstate
100) Defense Highway	1	Route is on a Interstate STRAHNET Route
101) Parallel Structure	L	Left structure of parallel bridges
102) Direction of Traffic	1	1-way traffic
103) Temporary Structure		
110) Designated National Network	1	On national network
20) Toll	3	On Free Road
21) Maintain	1	State Highway Agency
22) Owner	1	State Highway Agency
Report Class	S	STATE
37) Historical Significance	5	Bridge is not eligible for National Register

WATERWAY

DrainageBasinCode		
38) Navigation Control	0	No navigation control on waterway
39) Navigation Vert Clr.		40) Navigation Horiz Clr.
116) Vert-Lift Brg Nav Min		
111) Pier Abutment Protection		

PROPOSED IMPROVEMENTS

75A) Type of Work Proposed		
75B) Work Done By		
76) Length of Struct. Improvement		ft
94) Bridge Improvement Cost	$	
95) Roadway Improvement Cost	$	
96) Total Project Cost	$	
97) Year of Improvement Cost Est.		
114) Future ADT		115) Year Future ADT

List No. 27 Project No. Advertised

POSTED SIGNS & UTILITIES

Other Posted Signs 1					
Other Posted Signs 2					
Actual P.L. Single Unit Truck		tons	Actual P.L. 4Axle Truck		tons
Rec. P.L. Single Unit Truck		tons	Rec. P.L. 4Axle Truck		tons
Actual P.L. Semi-TrailerTruck		tons	Actual P.L. 3S2 Truck		tons
Rec. P.L. Semi-TrailerTruck		tons	Rec. P.L. 3S2 Truck		tons
Rec. P.L. All Vehicles		tons	Actual P.L. All Vehicles		tons
Posted Vert Clearance On Bridge		ft in			ft In
Posted Vert UnderClearance		ft in			ft In
Posted Speed Limit		mph			mph
Utility					
Utility	1	Gas			
Utility	2	Water			
Utility	F	Fibre Optics			

LOAD RATING AND POSTING

31) Design Load	5	Evaluation Code	L	
63) Operating Rating Type	1	Year of Evaluation	2000	
64) Operating Rating	87.0	70) Bridge Posting	5	
65) Inventory Rating Type	1	41) Structure Status	A	A
66) Inventory Rating	52.2			

CONDITION

		Rating	By
58) Deck	6	6	SKD
59) Superstructure	4	4	SKD
60) Substructure	5	5	SKD
61) Channel & Chan. Protection	N	N	SKD
62) Culverts	N	N	SKD

APPRAISALS

		Rating	By
67) Structure Evaluation	4	4	MC
68) Deck Geometry	5	5	SKD
69) Under Clear Vert & Horiz	5	5	SKD
71) Waterway Adequacy	N	N	SKD
72) Approach Rdwy Alignment	5	5	SKD
113) Scour Critical	8		

Items 58 Thru 72 Checked By:

36) Traffic Safety Features:

A) Bridge Railings	1	1
B) Transitions	1	1
C) Approach Guardrail	1	1
D) Approach Guardrail End	1	1

OTHER FEATURES

Fence Required	Yes		Barrel Ladder	No	
Fence Present	No	N	Stand Pipes	No	
Fence Height	0.0 ft	Blank ft	Cat Walks	No	
Fence Type	0	Blank	Movable Inspection System	No	
Fence Material	0	Blank	Loose Concrete Checked?	Yes	Y
Fence Top Type	0	Blank			

INSPECTION COMMENTS

Proposed Next Indepth Insp Year	2016	
Senior	Sarwat Basha	Madan M-Gupta 8/1/14
Supervisor	Leo Cain	

REVIEWED BY: SLC Date 8/7/14

BRIDGE NUMBER	TOWN NAME	NBIS BRG LGTH	
03311	PLAINVILLE	True	663
FACILITY CARRIED	FEATURE CROSSED		
INTERSTATE-84 WB	RT 72 NB, RR & RT 372		

STATE OF CONNECTICUT
DEPARTMENT OF TRANSPORTATION
DIVISION OF BRIDGE SAFETY EVALUATION

INVENTORY ROUTE UNDER STRUCTURE EVALUATION

FORM BRI-25 REV 10/00

INSPECTED BY: S. DONTULA
AMIT KC

REVIEWED BY: SK DATE: 8/2/14

SHEET_____ OF_____ (INSP. REPORT)

IDENTIFICATION

DESCRIPTION: Route 72 NB

5) INVENTORY ROUTE:

A) RECORD TYPE	A	
B) ROUTE SIGNING PREFIX	3	State Highway
C) DESIGNATED LEVEL OF SERVICE	1	Mainline
D) ROUTE NO.	00072	
11) MILE POINT (INV.RTE)	3.01	

CLASSIFICATION

26) INV. RTE. FUNCT CLASSIFICATION	12	Urban Principal Arterial -
100) DEFENSE HIGHWAY DESIGNATION	0	Route is not a STRAHNE
** 102) DIRECTION OF TRAFFIC	1	1-way traffic
104) HIGHWAY SYSTEM OF INV. ROUTE	1	On System
110) DESIGNATED NATIONAL NETWORK	1	On national network

AGE & SERVICE

+ 28B) NUMBER OF INV.ROUTE LANES	2		
* 29) ADT (INV. RTE)	26400		25750
* 109) TRUCK ADT % (INV.RTE)	8		08
* 30) YEAR OF ADT (INV. RTE)	2011		2013
* 41) INV ROUTE OPERATIONAL STATUS	A	Open, no restriction	A
19) BYPASS DETOUR LENGTH	2	Miles	

POSTED SIGNS

+ POSTED VERT. CLR UNDER BRIDGE 0ft 0in ft in

Leave Blank.

COMMENTS:

Item 29 is Half ADT ✓

GEOMETRIC DATA

+ 10) INV. RTE. MIN. VERT. CLEARANCE	21 ft 3 in	21 ft 04 in
+ 47) LOG INV. RTE. TOTAL HORIZ CLR.	44.2 ft	40.3 ft
+ 47) RLOG INV. RTE. TOTAL HORIZ CLR.	0 ft	. ft
+ LOG MIN VERT CLR OVER INV ROUTE	15 ft 11 in ✓	ft in
+ RLOG MIN VERT CLR OVER INV ROUTE	0 ft 0 in	ft in
+ 55) MIN LAT UNDERCLR ON RIGHT	H 13.2 ft	13.4 ft
+ 56) MIN LAT UNDERCLR ON LEFT	7 ft ✓	. ft

* FILL OUT ON EVERY INSPECTION 29, 109, 30, 41

\+ VERIFY EVERY INSPECTION 28B, 10, 47, 53, 55, 56 & POSTED VERT CLEARANCE UNDER THE BRIDGE

** MUST BE FILLED OUT OR VERIFIED ON THE FIRST INSPECTION MADE BASED ON THE NEW FHWA GUIDE 102

BRIDGE NUMBER	TOWN NAME	NBIS BRG LGTH
03311	PLAINVILLE	True 663
FACILITY CARRIED	FEATURE CROSSED	
INTERSTATE-84 WB	RT 72 NB, RR & RT 372	

STATE OF C ECTICUT
DEPARTMENT OF TRANSPORTATION
DIVISION OF BRIDGE SAFETY EVALUATION

INVENTORY ROUTE UNDER STRUCTURE EVALUATION

FORM BRI-25 REV 10/00

INSPECTED BY: S. DONTUCH
AMIT KC

REVIEWED BY: SK DATE: 8/21/14

SHEET_____ OF_____ (INSP. REPORT)

IDENTIFICATION

DESCRIPTION: Route 372

5) INVENTORY ROUTE:

A) RECORD TYPE	B	
B) ROUTE SIGNING PREFIX	3	State Highway
C) DESIGNATED LEVEL OF SERVICE	1	Mainline
D) ROUTE NO.	00372	
11) MILE POINT (INV.RTE)	3.43	

CLASSIFICATION

26) INV. RTE. FUNCT CLASSIFICATION	14	Urban Other Principal Art
100) DEFENSE HIGHWAY DESIGNATION	1	Route is on a Interstate S
** 102) DIRECTION OF TRAFFIC	2	2-way traffic
104) HIGHWAY SYSTEM OF INV. ROUTE	1	On System
110) DESIGNATED NATIONAL NETWORK	0	Not on national network

AGE & SERVICE

+ 28B) NUMBER OF INV.ROUTE LANES	2		
* 29) ADT (INV. RTE)	10800		9600
* 109) TRUCK ADT % (INV.RTE)	5		05
* 30) YEAR OF ADT (INV. RTE)	2011		2013
* 41) INV ROUTE OPERATIONAL STATUS	A	Open, no restriction	A
19) BYPASS DETOUR LENGTH	1	Miles	

POSTED SIGNS

+ POSTED VERT. CLR UNDER BRIDGE 0ft 0in ft in

COMMENTS: Blank.

GEOMETRIC DATA

+ 10) INV. RTE. MIN. VERT. CLEARANCE	25 ft 0 in		ft in
+ 47) LOG INV. RTE. TOTAL HORIZ CLR.	66.3 ft		ft
+ 47) RLOG INV. RTE. TOTAL HORIZ CLR.	0 ft		~~66.3~~ ft SK
+ LOG MIN VERT CLR OVER INV ROUTE	23 ft 5 in		ft in
+ RLOG MIN VERT CLR OVER INV ROUTE	25 ft 0 in		ft in
+ 55) MIN LAT UNDERCLR ON RIGHT	H 14.8 ft		ft
+ 56) MIN LAT UNDERCLR ON LEFT	0 ft		ft

* FILL OUT ON EVERY INSPECTION 29, 109, 30, 41

\+ VERIFY EVERY INSPECTION 28B, 10, 47, 53, 55, 56 & POSTED VERT CLEARANCE UNDER THE BRIDGE

** MUST BE FILLED OUT OR VERIFIED ON THE FIRST INSPECTION MADE BASED ON THE NEW FHWA GUIDE 102

Connecticut Department of Transportation

Bridge Inspection Report BRI-18

Bridge #: 03311 **Inspection Date: 04/22/2014**

Inspection Type:	Routine	**Previous Inspection Date:**	4/11/2012	**Snooper Required:**	No
Inspection Performed By:	GM2 On-call	**Feature Carried:**	INTERSTATE-84 WB	**Snooper Used:**	No
Town:	PLAINVILLE	**Feature Intersected:**	RT 72 NB, RR & RT 372	**Year Built:**	1969
Location:	I-84/RT 72 INTERCHANGE 11	**Main Design:**	Stringer/Multi-beam or Girder	**Year Rebuilt:**	-
Main Material:	Steel				

Visits

Visit Date:	Temp:	Start Time:	End Time:
4/22/2014	60	8:00:00 AM	3:00:00 PM
4/28/2014	60	8:30:00 AM	3:00:00 PM
4/29/2014	50	8:30:00 AM	3:00:00 PM
5/15/2014	60	8:30:00 AM	3:30:00 PM
6/2/2014	70	8:30:00 AM	3:00:00 PM
6/4/2014	70	8:00:00 AM	3:00:00 PM
6/6/2014	70	7:00:00 AM	3:00:00 PM
6/7/2014	70	6:45:00 AM	12:30:00 PM

Inspectors:

Inspector:	Task:
A. KC	Inspector
B. Swanson	Inspector
P. Haefner	Inspector
S. Dontula	Lead Inspector

DECK: - **Overall Rating:** 6

	Rating	
OVERLAY:	7	The bituminous concrete overlay exhibits areas of minor raveling, paving seams that are opening up to 1" wide for the full length and isolated cracks open up to 1/8" wide. See Field Notes Sheets 6, 7 and 8 and Photo Nos. 8 and 9.
DECK-STR. CONDITION:	6	The underside of concrete deck exhibits some transverse hairline cracks with and without efflorescence, several areas of hairline map cracking up to full width x full length with and without efflorescence and a few spalls up to 2" deep with and without exposed rebar. There are a few concrete patches, isolated 1" deep honeycomb areas and isolated locations of forms left in place. The end cross frame haunches, girder haunches and undersides of the joints have hollow areas, cracks up to 1/16" wide with rust stains and spalls that are typically not more than 3" deep with and without exposed rebar and isolated deck end spalls are up to 9" deep. There is tree growing in Bay 1 of Span 6 at the 1st cross frame from Pier 5 and the previously noted hollow haunch along Girder G1 at Pier 4 in Span 5 has been removed. There are a

		few hollow areas that over roadways (not loose at the time of inspection) are as follows: • Span 1, underside of Pier 1 joint, Bay 2, near Girder G2: 1' x 1' hollow area over Route 72 WB, left lane. • Span 5, Girder G7 haunch at Pier 5: 1' hollow haunch, Route 372 WB lane/shoulder. The underside of the deck deterioration covers a maximum of 18.4% of Span 5 deck area and 12.4% of the total deck area. See Field Notes Sheets 27, 28, 32, 34, 35, 37, 43, 45, 50, 52, 55 and 57 and Photo Nos. 10 through 14.
CURBS:	7	There is a vertical granite curb along the south side, which exhibits scrapes with rust stains and chipped edges. The sloped concrete curb along the north side exhibits hairline cracks at random locations. The average south curb reveal is 8" and average north curb reveal is 2-1/4". See Field Notes Sheets 6 through 9 and Photo Nos. 15 and 16.
MEDIAN:	N	-
SIDEWALKS:	N	-
PARAPET:	7	There is a concrete parapet along both fasciae, which exhibits areas of light scaling, vertical hairline cracks at random locations, areas of hairline map cracking, scrapes and gouges. There are a few patches and shallow rebar and the parapet extensions have full perimeter hairline cracks. See Field Notes Sheets 6, 7 and 8 and Photo Nos. 15 and 16.
RAILING:	N	-
PAINT:	N	-
FENCE:	N	-
DRAINS:	7	There are PVC deck weep pipes located in Bay 1 in all Spans and there are scuppers along north curb in Spans 2 and 4. The previously noted broken weep pipe in Span 2 in Bay 1, near Pier 2 has been replaced. Scuppers exhibit no significant deficiencies. Rating revised fro "6" to "7". See Field Notes Sheets 27, 28, 32, 35, 43, 50 and 55 and Photo Nos. 10 through 14.
LIGHTING STANDARD:	5	There are light standards on top of the north parapet in Spans 1, 4 and 6 which are missing up to all of their anchor bolt covers. In addition, three of the four corners of the light standard base plate have been removed/broken off in Span 6 (no change). The junction box covers in the north parapet are sheet metal covers and the junction box cover in Span 1 has been repaired since the last inspection. See Field Notes Sheets 6, 7 and 8 and Photo No. 17.
UTILITIES TYPE/SIZE:	8	There is a 4" diameter fiberglass conduit attached to the outside face of the north parapet for the highway monitoring system. No significant deficiencies noted. See Field Notes Sheet 27.
CONSTR JOINTS:	N	-
EXPANSION JOINTS:	5	There are asphaltic plug at both abutments and all piers. The joints exhibit adhesion separation cracks up to 24' long and open up to 3" wide with worst in the shoulders. The joint at Pier 2 is depressed up to 1" deep along the east edge and there is heaving in the right shoulder 2' x 4" x 1" high. The west joint at Pier 3 exhibits a 4' x full width x 1" deep depressed area in the right lane and the joint at Pier 4 exhibits a 3' x full width x 2" deep depressed area in the middle lane. All the joints have wheel rutting up to 3/4" deep and foam backer rods are visible from below at some joints. Evidence of joint leakage was noted at random locations below. See Field Notes Sheets 6, 7 and 8 and Photo Nos. 18 through 21.

59. SUPERSTRUCTURE: -

Overall Rating: 4

	Rating	
BEARING DEVICES:	5	Expansion bearings: The guided pot bearings exhibit areas of light to heavy with laminar rust at some locations. Few bearings have impacted rust up to 1/8" thick between the sole plates and bottom flanges. All the bearings exhibit evidence of recent movement with the exception of East Abutment bearings. Fixed pot bearings exhibit areas of light to heavy with laminar rust at some locations. There is moderate to heavy accumulation of debris and heavy pigeon debris around random bearings. See Field Notes Sheets 11, 12, 13, 15, 16, 17, 29, 30, 33, 34, 51, 52, 56 and 57 and Photo Nos. 22 and 23. Pier 3 cap girder bearings: The sliding expansion bearing exhibits light rust, up to 1/8" impacted rust between plates, backed off anchor bolt nuts and gaps up to 1/4" high below the masonry plate resulting in 16% loss of bearing area (no change). The fixed bearing has one missing anchor bolt nut, one nut backed off and up to 75% section loss on the nuts. There is impacted rust between the underside of the curved sole plate and the top of the masonry plate. See Field Notes Sheets 14 and 71 and Photo Nos. 24, 25 and 26. Fixed hinges at Pier 3: The fixed hinges exhibit up to 3/4" thick impacted rust between the hinge plates and webs, isolated locations with gaps up to 3/8" between the hinge plates and webs at the locations where there is no impacted rust. Hinge plates have section losses up to 3/16" deep at random locations, typically adjacent to the pin nuts and near the top of the random hinge plates. Isolated nuts appear to have rotated in the past based on the paint marks, (no change) and all cotter pins were in place at the time of inspection. All 2014 measurements were compared against the 2012 measurements. All "V" measurements were within 1/8" of previous measurements, except for Span 4 Girder G1 and Girder G4, where the measurements was 1/4" greater than the last inspection as the rust was removed prior to the measurement. No signs of distress were noted at any location. See Field Notes Sheets 19 through 26, 39 through 42, 46, 47 and 48 and Photo Nos. 27 through 30.
STRINGERS:	N	-
GIRDERS:	4	The superstructure consists of seven welded steel plate girders in all spans. Girders exhibit areas of heavy rust with laminar rust, particularly along the north fascia girder, as well as adjacent to the fixed pin assemblies at Pier 3. Girder webs exhibit section loss up to 1/4" deep at the bearings and an isolated location of 1/2" diameter rust hole in the Girder 1 web in Span 2 at Pier 1. The stiffeners exhibit section losses with rust holes up to 5" wide x 3" high at the top and bottom. Resulting section loss for shear in the girder webs typically do not exceed 10%, except for two locations adjacent to the fixed pin assemblies at Pier 3 (Span 3, Girder G3 with 11% loss for shear and Span 4, Girder G1 with 25% loss for shear). The section loss in web bearing areas (buckling) is typically less than 25% except for Girder G1 at Pier 1 in Span 2 up to 37%, Girder G1 in Span 3 at Pier 2 up to 31% and Girder G1 in Span 5 at Pier 5 up to 29%. There are areas of section losses in the bottom flange of Girder G1 resulting in up to 9.8% loss in high tension zones. The top flange of Girder G1 exhibits areas of heavy rust with laminar rust with up to 3/16" deep section loss resulting in ±8% loss near mid-span in Span 5. There are areas of heavy rust along Girder G1 throughout appears to be due to previous leakage through the deck (dry this inspection). There are areas that were previously spot

		painted at random locations but are starting to rust again. See Field Notes Sheets 27, 29, 30, 31, 33, 34, 36-42, 44-49, 51-54 and 56-59 and Photo Nos. 10 and 27 through 38.
FLOOR BEAMS:	N	-
TRUSSES-GENERAL:	N	-
TRUSSES-PORTALS:	N	-
TRUSSES-BRACING:	N	-
PAINT:	5	Less than 50% of the painted surfaces are rusting. See above sections entitled "Bearing Devices" and "Girders".
RUST:	4	See above sections entitled "Bearing Devices" and "Girders".
MACHINERY MOV SPAN:	N	-
RIVETS & BOLTS:	6	All the cross frame bolts are typically erection bolts, except at the cross frame locations that have been retrofitted with high-strength bolts. At 2nd intermediate cross frame connection to Girder G3 in Span 1, two of three bolts are loose (no change since last inspection) and random load indicating washers at the bolted retrofits are not crushed to ASTM F959 standards. See Field Notes Sheets 27, 29, 30, 33, 34, 36, 37, 44, 45, 51, 52, 56 and 57.
WELDS - CRACKS:	5	The lower horizontal welds and/or lower vertical gusset plate welds are cracked, broken, missing, short welds, or welds that have no fusion at the cross frame lower angle to stiffener connections at a total of 32 locations throughout the structure, five of which were found new this inspection. There are other welds at random locations that are sloppy or have poor fusion. Note that erection bolts are typically in place at these locations and some of these cross frame connections with previously cracked/broken welds were retrofitted with bolts in the past (some welds at these retrofit locations were also repaired) and some of the cracked welds were re-welded and spot painted. Bottom flange transition welds (Fatigue Category 'B') in the girders and steel cap girders were inspected hands-on and no significant deficiencies were noted. No deficiencies were noted to the (Fatigue Category 'E') deck weep pipe support welds to the lower portions of the girder webs. No deficiencies were noted in the stitch welded stiffeners near the bearings (most likely jacking stiffeners). See Field Notes Sheets 27, 29, 30, 33, 34, 36, 37, 44, 45, 51, 52, 56 and 57 and Photo Nos. 39 through 42.
TIMBER DECAY:	N	-
CONCRETE CRACKING:	N	-
COLLISION DAMAGE:	8	-
MEMBER ALIGNMENT:	6	See above section entitled 'Bearing Devices'.
DEFLECT. UNDER LOAD:	N	(N) Normal, (E) Excessive
VIBRATION UNDER LOAD:	N	(N) Normal, (E) Excessive
STAND PIPES:	N	-
BARREL LADDERS:	N	-

ARE BARREL LADDERS OSHA COMPLIANT? N/A

60. SUBSTRUCTURE:	-	Overall Rating:	5

	Rating	
ABUTMENTS-STEM:	7	The West Abutment stem exhibits no significant deficiencies and the East Abutment stem exhibits vertical hairline cracks up to full height with and without efflorescence. See Field Notes Sheets 62 and 63 and Photo No. 43.
ABUTMENTS-BACKWALL:	6	The backwalls exhibit isolated vertical hairline cracks with efflorescence. The West Abutment backwall exhibits a 3' x 3' x 3" deep spall with exposed rebar behind Girder G1 and a 1' x 6" x 1" deep spall with exposed rebar behind Girder G7. The East Abutment backwall has a 2.5' x 2.5' x 2" deep spall in Bay 6 and two spalls up to 1' x 1' x 2" deep behind Girder G7. See Field Notes Sheets 62 and 63 and Photo Nos. 44 and 45.
ABUTMENTS-FOOTINGS:	5	The north end face of the West Abutment footing is exposed due to erosion for approximately 7.5' long x up to 23" high and there is a full height x 1/4" wide crack in the footing below the wingwall/abutment junction (no change since last inspection). The Northwest Wingwall footing is also exposed up to full height x 30' long and is undermined approximately 3' long x 9" high x 6.5' deep with exposed piles. No change since previous inspection. See Field Notes Sheets 62, 63 and 64 and Photo No. 46.
ABUTMENTS-SETTLEMENT:	8	No settlement is noted. However, that there is a 1/4" wide crack in the footing at the West Abutment/Northwest Wingwall junction. See Field Notes Sheet 64.
ABUTMENTS-WINGWALLS:	5	Wingwalls exhibit isolated hairline cracks with and without efflorescence and missing/deteriorated joint fill material at the joints. See above section entitled "Abutments - Footings" for exposed and undermined footing at the Northwest Wingwall. See Field Notes Sheets 64 and 65 and Photo No. 46.
PIERS/BENTS-CAPS:	5	Post tensioned pier caps (Piers 1, 2, 4 and 5): The post tensioned concrete pier caps exhibit horizontal, vertical, diagonal cracks open up to 1/8" wide with and without efflorescence and areas of hairline map cracking up to 3' x 3' with and without efflorescence (including the post tensioning anchorages at the ends of the caps). There are minor spalls adjacent to the cracks at random locations. In addition there are a few spalls up to 8" x 4" x 2" deep with and without exposed rebar and hollow areas up to full height x 3'. Hollow areas over travel ways are at the following locations: • Pier 2 east face: 1' x 1.5' hollow area over Route 72 WB right lane (not loose). • Pier 4 east face and north face near Girder G1: Hollow areas over/adjacent to Route 372 EB shoulder (not loose). Concrete pedestals have isolated hairline cracks. See Field Notes Sheets 66 - 69 and 72-75 and Photo Nos. 47, 49, 50 and 51. Steel cap girders at Pier 3: The steel cap girder flanges at Pier 3 exhibits areas of section loss up to 1/16" deep away from the supports (<5% section loss) and deeper losses near the supports (non-critical zones). There are isolated locations of 1.5' x 3" x 3/16" deep section loss along the base of the web and section loss up to 1/8" deep in the bearing stiffeners resulting in less than 5% web loss for shear and 8% loss in web bearing area (buckling). See Field Notes Sheets 70 and 71 and Photo Nos. 25, 26 and 48.
PIERS/BENTS-PILE BENT:	N	-
PIERS/BENTS-COLUMNS:	7	The concrete pier columns have shallow rebar, shallow tie wires, isolated minor spalls, isolated hairline cracks and isolated areas of hairline map cracking. See Field Notes Sheets 66 through 75 and Photo Nos. 47 and 48.
PIERS/BENTS-	N	Not visible.

FOOTING:		
PIERS/BENTS-SETTLMT:	8	-
EROSION-SCOUR:	5	The slope in front of the West Abutment embankment exhibits an isolated 1' deep erosion area near the centerline of the abutment and the slope in front of the East Abutment exhibits areas of erosion up to 20' x 8' and up to 1' deep. Erosion has exposed and/or undermined the north end of the West Abutment footing and the Northwest Wingwall footing (See above section entitled "Abutments - Footings"). See Field Notes Sheets 62, 63 and 64 and Photo Nos. 46 and 52. Scour – N/A
CONCRETE CRACK-SPALL:	5	See above sections entitled "Abutments-Stem", "Abutments-Backwall", "Abutments-Wingwalls", "Pier/Bents - Caps" and "Pier/Bents - Columns".
STEEL CORROSION:	5	See above section entitled "Piers/Bents-Cap".
PAINT:	7	Less than 10% of the painted surfaces are rusting along the Pier 3 steel cap girders. See above section entitled "Piers/Bents-Cap".
TIMBER DECAY:	N	-
COLLISION DAMAGE:	8	-
DEBRIS:	5	There are areas of light to moderate accumulation of debris on the West Abutment seat and areas of heavy accumulation of concrete debris and pigeon debris on top of the pier caps. See Field Notes Sheets 62 through 75 and Photo Nos. 23 and 53.

---

61. CHANNEL & CHANNEL PROTECTION:	-	**Overall Rating:**	N

---

62. CULVERTS & RETAINING WALL:	-	**Overall Rating:**	N

---

65. APPROACH CONDITION	-	**Overall Rating:**	6

	Rating	
APPROACH SLAB:	7	The approach slabs are paved over and are not visible. The rating is based on the condition of the overlay. See item below entitled "Approach Pavement".
RELIEF JOINTS:	N	-
APPROACH GUIDE RAIL:	6	There is a metal beam guiderail at all four corners of the bridge. The metal beam guiderails exhibit dents and minor collision damage. There is an 8' long moderate impact damage at the northeast approach with two bent posts, two

		locations of collision damage up to 12' long with one bent post at the southeast corner and 6' long collision damage with two bent posts at the southwest corner. There is a 1-1/2" gap between the railing and parapet due to backed off anchor bolts at the northeast guide rail transition. See Field Notes Sheets 6 and 8 and Photo Nos. 54 and 55.
APPROACH PAVEMENT:	7	The bituminous concrete pavement at the approaches exhibit longitudinal and transverse cracks open up to 1" wide, paving seams opening up to 1" wide and isolated areas map cracking in the east approach pavement. See Field Notes Sheets 6 and 8 and Photo No. 56.
APPROACH EMBANKMENT:	7	The southeast embankment has areas of erosion, up to 1' deep. See Field Notes Sheet 8.

TRAFFIC SAFETY FEATURES

	Rating	
BRIDGE RAILINGS:	Last Inspection: 1 Current: ~~0~~ 1 SC	-
TRANSITIONS:	Last Inspection: 1 Current: 1	-
APPROACH GUARDRAILS:	Last Inspection: 1 Current: 1	-
APPR. GUARDRAIL ENDS:	Last Inspection: 1 Current: 1	-

66. LOAD POSTING

	- Posted Loading -	
SINGLE UNIT (TONS):	Last Inspection: - Current: -	-
SEMI TRAILER (TONS):	Last Inspection: - Current: -	-
4 AXLE (TONS):	Last Inspection: - Current: -	-
3S2 (TONS):	Last Inspection: - Current: -	-

ADVANCE WARNING (Y/N):	N	-
LEGIBILITY:	N	-
VISIBILITY/LOCATION:	N	-

67. MISCELLANEOUS

	Rating	
MIN. VERT. UNDERCLEARANCE:	Last Inspection: 15' 11" Current: 16' ~~10"~~	See Field Notes Sheets 3, 4 and 5. 15'-11" SK
POSTED CLR. UNDER BRIDGE:	Last Inspection: -' -" Current: -' -"	-
POSTED CLR. ON BRIDGE:	Last Inspection: -' -" Current: -' -"	-
ADVANCED WARNING (YES/NO):	No	-
SPEED LIMIT (IF ANY):	Last Inspection: 50 Current: -	Posted at the northeast approach.
CHARACTER OF TRAFIC:		Heavy/Mixed

ADDITIONAL NOTES:

1. Bridge identification number is clear and legible.
2. The bridge is logged from west to east and the girders are numbered from north to south, which is consistent with the previous inspection report.
3. Bridge was inspected using 32' ladders in Span1, 40' lift truck and 60' man lift. However, a 60' snooper is recommended to inspect Span 1 and other spans as there is heavy growth of vegetation below Span 1 making it unsafe to use the ladders.
4. Lane closures on Routes 72 and I-84 utilizing state troopers.
5. A Plainville police officer was used for lane closures on Route 372.
6. Pan AM railroad flagman was used to inspect Pier 3 and spans adjacent to Pier 3.
7. Bridge was inspected in conjunction with bridges 03312, 03313 and 03320.

ADDITIONAL COMMENTS:

There is a BMM submitted with this report.

Inspectors' Signatures: 1) D. Smith Reddy

Date: 8/01/14

2) _____ Date: 08/01/2014

3) _____ Date: ----/----/-----

4) _____ Date: ----/----/-----

P.E. Signature: Madan M. Gupta Date: ----/----/-----

P.E. #: 14052 Date: 8/1/14

Reviewed by: Stephen Keedy conndot Date: 8/2/14

RECEIVED
AUG 04 2014
CONNECTICUT - DOT
BRIDGE SAFETY & EVALUATION

GM2 ASSOCIATES

	JOB NO. 170-3224	BRIDGE NO. 03311
SUPPLEMENTAL SHEET	DATE: (SEE BELOW)	SHEET 1 OF 80
DESCRIPTION: TIME LOG		

DATE:	4/22/2014		DESCRIPTION	TIME AT SITE		
WEATHER:	Sunny, 60°F	CREW:	SRD, BJS	8:00 AM	TO	3:00 PM
EQUIP. LIST:	GM2 Inspection Van	LIFT:			TO	
		TROOPER:			TO	
					TO	
VISITORS:	Rick Prescott 11:10 AM - 11:20 AM.				TO	
TC & NOTES:	Inspected both abutments and part of Spans 1 & 6.					
	Inspected in conjunction with Bridge Nos. 03312, 03313 & 03320.					

DATE:	4/28/2014		DESCRIPTION	TIME AT SITE		
WEATHER:	Sunny, 60°F	CREW:	SRD, AKC, BJS	8:30 AM	TO	3:00 PM
EQUIP. LIST:	GM2 Inspection Van	LIFT:	40' (E-L)	8:30 AM	TO	3:00 PM
	Ladders	MPT:	McClain	8:30 AM	TO	3:00 PM
		TROOPER:	Rheiner (#1156)	8:45 AM	TO	3:00 PM
VISITORS:					TO	
TC & NOTES:	Right & left lane closures on Rte. 72 EB. Inspected part of Span 1.					
	Inspected in conjunction with Bridge No. 03312.					

DATE:	4/29/2014		DESCRIPTION	TIME AT SITE		
WEATHER:	Sunny, 50°F	CREW:	SRD, AKC, BJS, CAW	8:30 AM	TO	3:00 PM
EQUIP. LIST:	GM2 Inspection Van	LIFT:	2 - 40' (E-L)	8:30 AM	TO	3:00 PM
	Ladders	MPT:	McClain	8:30 AM	TO	3:00 PM
		TROOPER:	Santa (#990)	8:45 AM	TO	2:30 PM
VISITORS:					TO	
TC & NOTES:	Right & left lane closures on Rte. 72 WB. Inspected part of Spans 1 & 2 and Piers 1 & 2.					
	Inspected in conjunction with Bridge Nos. 03312 & 03313.					

DATE:	5/15/2014		DESCRIPTION	TIME AT SITE		
WEATHER:	Sunny, 60°F	CREW:	SRD, AKC, PAH, BJS	8:30 AM	TO	3:30 PM
EQUIP. LIST:	GM2 Inspection Van	LIFT:	40' (E-L)	8:30 AM	TO	3:30 PM
		MPT:	McClain (2 Crews)	8:30 AM	TO	3:30 PM
VISITORS:		TROOPER:	Foley (#745)	8:45 AM	TO	1:45 PM
		TROOPER:	Zup (#745)	8:45 AM	TO	3:15 PM
TC & NOTES:	Right & left lane closures on Rte. 72 WB & right lane closure on I-84 EB. Inspected part of Span 1 & Pier 1.					
	Inspected in conjunction with Bridge Nos. 03312 & 03313.					

GM2 ASSOCIATES

	JOB NO. 170-3224	BRIDGE NO. 03311
SUPPLEMENTAL SHEET	DATE: (SEE BELOW)	SHEET 2 OF 80
DESCRIPTION: TIME LOG		

DATE:	6/2/2014		DESCRIPTION	TIME AT SITE		
WEATHER:	Sunny, 70°F	CREW:	SRD, AKC	8:30 AM	TO	3:00 PM
EQUIP. LIST:	GM2 Inspection Van	LIFT:	40' (E-L)	8:30 AM	TO	3:00 PM
		MPT:	McClain	8:30 AM	TO	3:00 PM
		TROOPER:	Such (#1302)	8:45 AM	TO	3:00 PM
VISITORS:		TROOPER:	Cipriano(#1383)	8:45 AM	TO	3:00 PM

TC & NOTES: Right & left lane closures on I-84 EB & WB. Inspected top of deck.
Inspected in conjunction with Bridge Nos. 03312 & 03313.

DATE:	6/4/2014		DESCRIPTION	TIME AT SITE		
WEATHER:	Sunny, 70°F	CREW:	SRD, AKC	8:00 AM	TO	3:00 PM
EQUIP. LIST:	GM2 Box Truck	LIFT:	60' Manlift (Above & Beyond)	8:00 AM	TO	3:00 PM
		TROOPER:	Cybulski (#795)	9:00 AM	TO	1:00 PM
					TO	
VISITORS:					TO	

TC & NOTES: Partial right lane closure on Rte. 372 WB & EB. Inspected part of Spans 4, 5 & completed Span 6,
Piers 3 (partial), 4 & 5. Inspected in conjunction with Bridge No. 03312.

DATE:	6/6/2014		DESCRIPTION	TIME AT SITE		
WEATHER:	Sunny, 70°F	CREW:	SRD, AKC, PAH, BJS	7:00 AM	TO	3:00 PM
EQUIP. LIST:	GM2 Inspection Van	LIFT:	60' Manlift (Above & Beyond)	7:00 AM	TO	3:00 PM
	GM2 Box Truck	MPT:			TO	
		TROOPER:			TO	
VISITORS:		FLAGMAN:	Phil Lane (PanAM RR)	7:00 AM	TO	3:00 PM

TC & NOTES: No TC. Inspected Span 3, Pier 3 & hinge measurements.
Inspected in conjunction with Bridge Nos. 03312 & 03313.

DATE:	6/7/2014		DESCRIPTION	TIME AT SITE		
WEATHER:	Sunny, 70°F	CREW:	SRD, AKC, PAH, BJS	6:45 AM	TO	12:30 PM
EQUIP. LIST:	GM2 Inspection Van	LIFT:	60' Manlift (Above & Beyond)	6:45 AM	TO	12:30 PM
	GM2 Box Truck	MPT:			TO	
VISITORS:		TROOPER:			TO	
		FLAGMAN:	Phil Lane (PanAM RR)	7:00 AM	TO	12:00 PM

TC & NOTES: No TC. Inspected Span 3, Piers 2 & 3 & hinge measurements.
Inspected in conjunction with Bridge Nos. 03312 & 03320. Inspection completed.

GM2	FIELD NOTES	JOB NO. 170-3224	BRIDGE NO. 03311
		DATE: 04/22/14	SHEET 2A OF 80
		CREW: SRO, AKC, PAH, BJS	

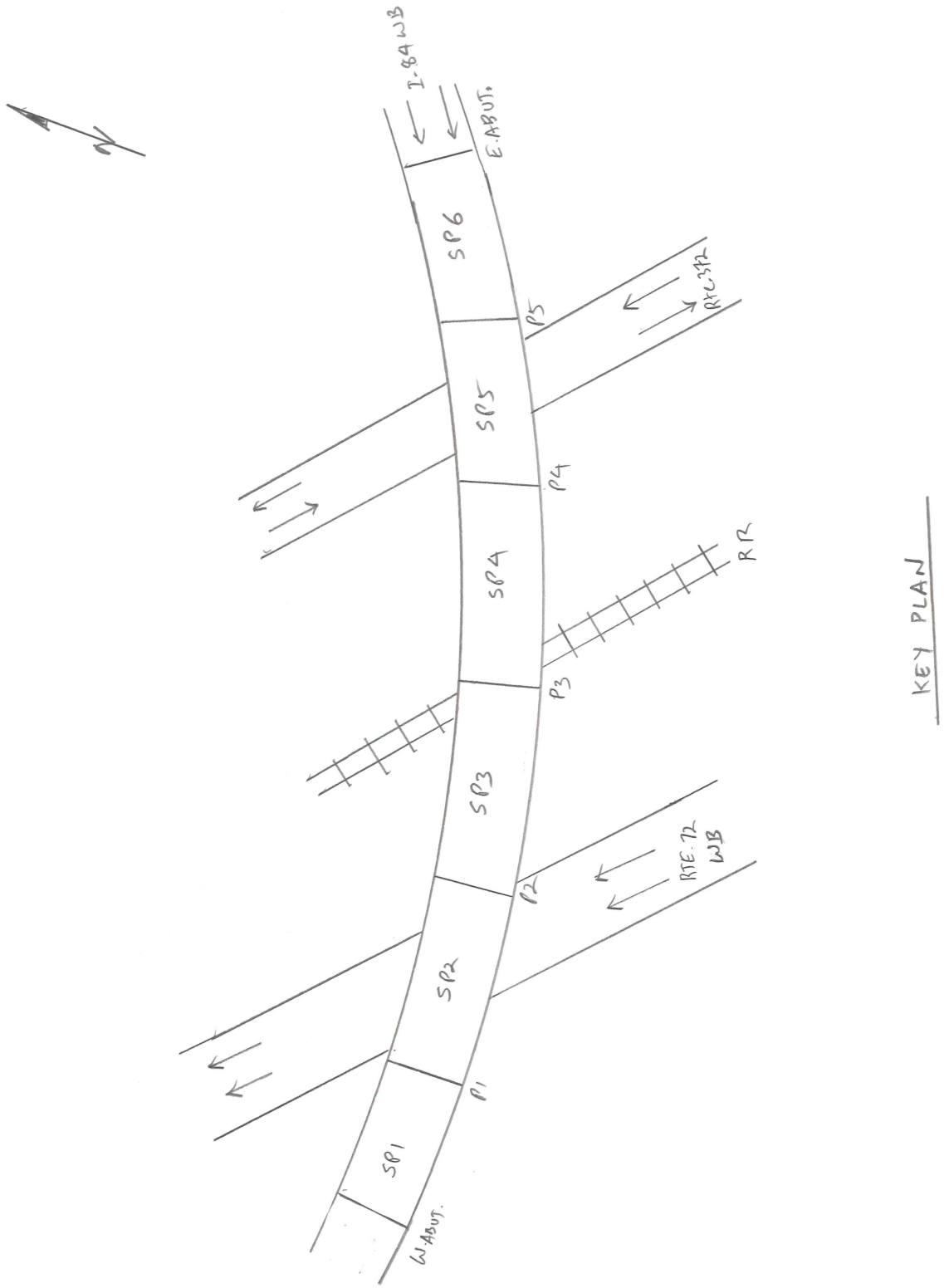

REVISION 1	DATE	CREW	REVISION 3	DATE	CREW
REVISION 2	DATE	CREW	REVISION 4	DATE	CREW

GM2 ASSOCIATES	FIELD NOTES	JOB NO. 170-3224	BRIDGE NO. 03311
		DATE: 04/29/14	SHEET 3 OF 80
		CREW: SRD, AKC, BJS, CAW	

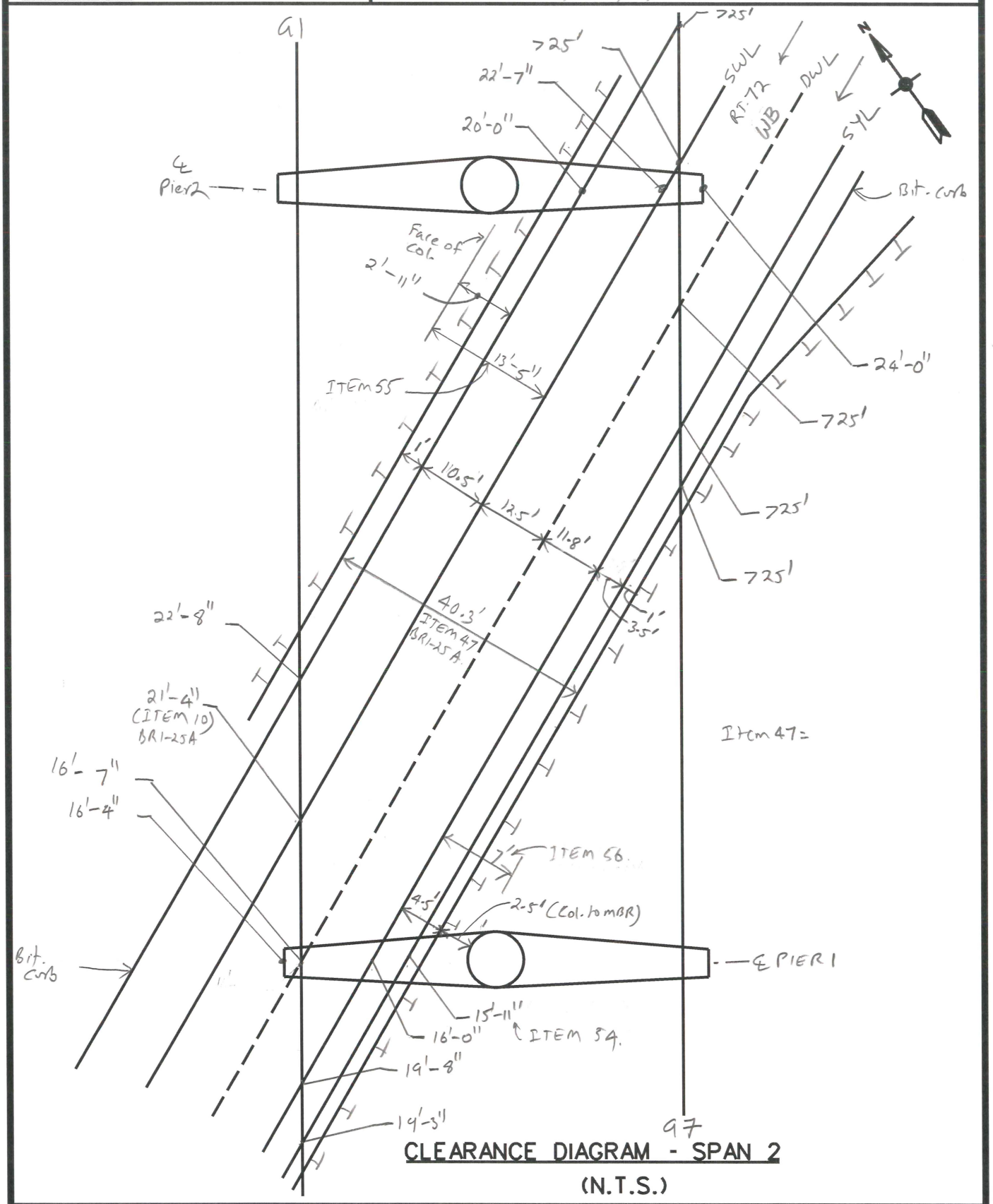

CLEARANCE DIAGRAM - SPAN 2

(N.T.S.)

REVISION 1	DATE	CREW	REVISION 3	DATE	CREW
REVISION 2	DATE	CREW	REVISION 4	DATE	CREW

~~#6/92~~

Field Notes

Lichtenstein
Consulting Engineers

PROJECT NO 170-2357 BRIDGE NO 03311
DATE 2/16/06 SHEET ~~4~~ 8 OF ~~14~~ 4/80 ~~8~~ ~~86~~
CREW DAL, TJS

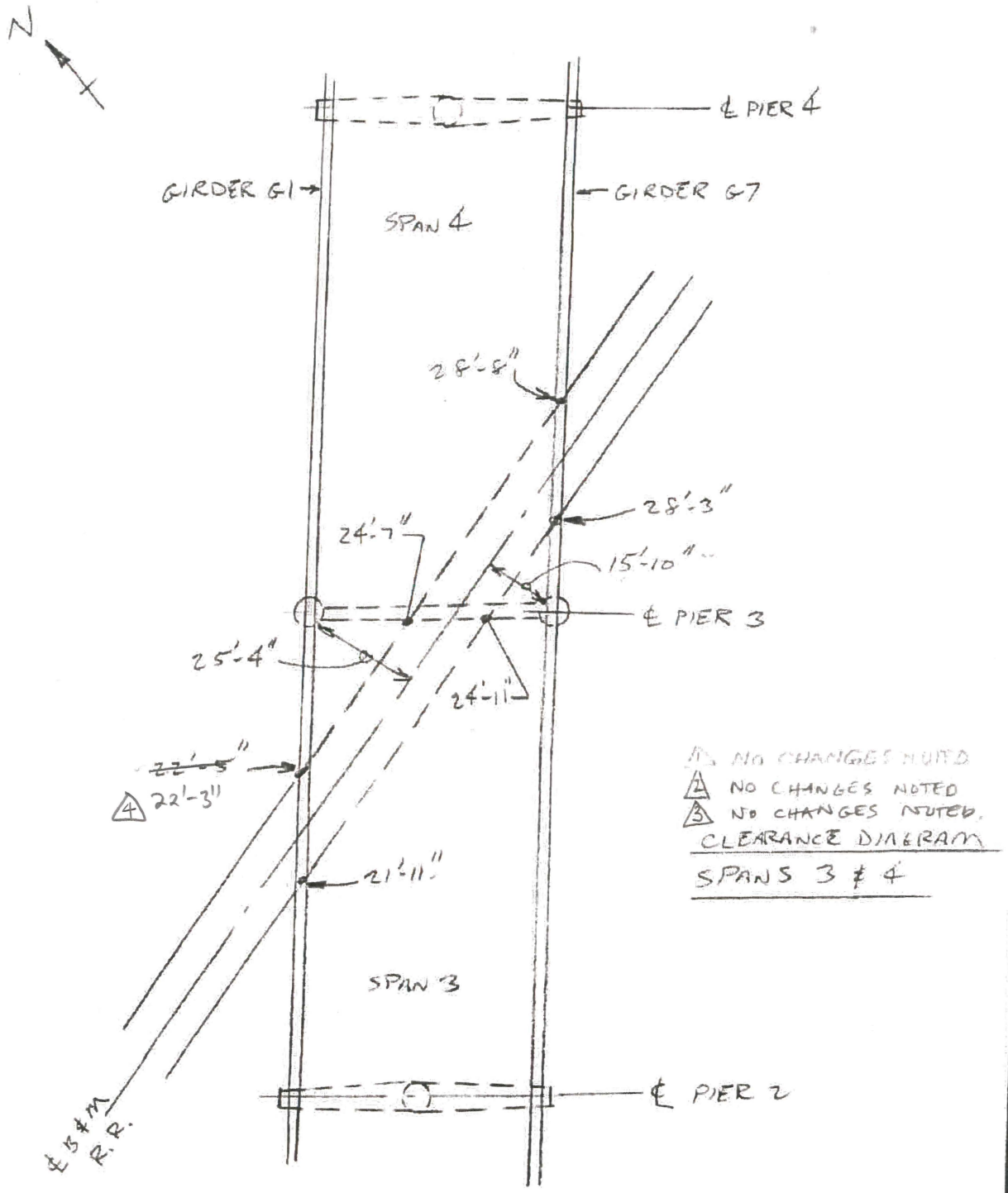

1 NO CHANGES NOTED
2 NO CHANGES NOTED
3 NO CHANGES NOTED.
CLEARANCE DIAGRAM
SPANS 3 & 4

REVISION 1	DATE 5/28/08	CREW KS, MA, ~~BRJ~~ (AI)	REVISION 2	DATE 5/19/10	CREW JAC, MJO (BAKER)
REVISION 3	DATE 4/18/12	CREW PB, MJO (BAKER)	REVISION 4	DATE 6/7/14	CREW SRD, BJS (GM2)

Field Notes

Lichtenstein
Consulting Engineers

PROJECT NO 170-2357 BRIDGE NO 003311
DATE 2/16/06 SHEET 4 OF 5/80
CREW DAL, TJS

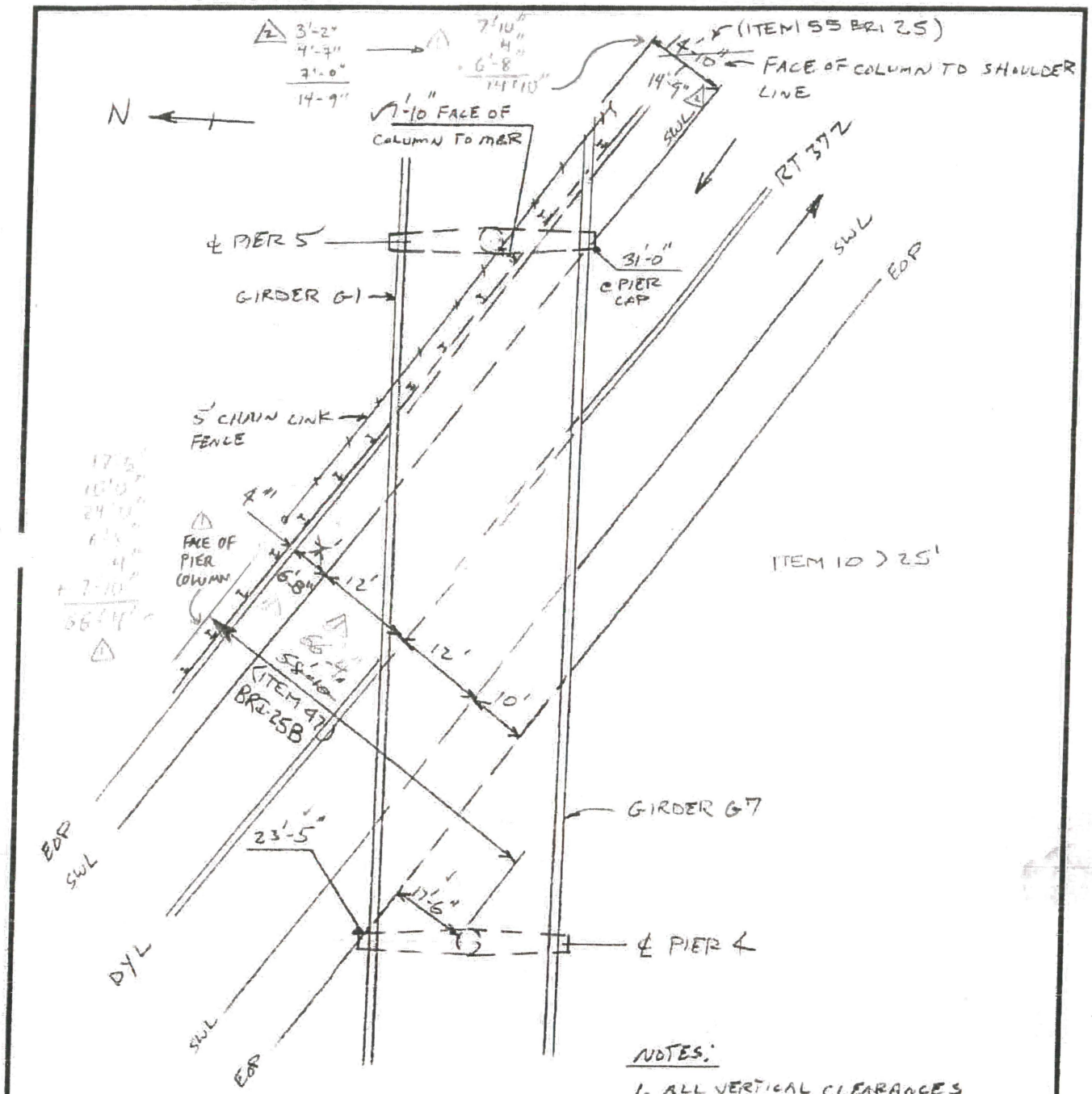

NOTES:
1. ALL VERTICAL CLEARANCES GREATER THAN 25', EXCEPT WHERE NOTED.

3 NO CHANGE
4 No Change

CLEARANCE DIAGRAM
SPAN 5

REVISION 1	DATE 05-08-08	CREW RDB, KS, JRI (A1)	REVISION 2	DATE 5/19/10	CREW JAC, MJO (BAKER)
REVISION 3	DATE 4/12/12	CREW MJO / JAC (BKR)	REVISION 4	DATE 6/4/19	CREW SRD, AKC

Field Notes

Lichtenstein
Consulting Engineers

PROJECT NO: ~~Po-235-7~~ 23410
BRIDGE NO: 0331
DATE: 3/8/06
SHEET: 5 OF 6/80
CREW: PHH, RB

LEGEND

(A): SEPARATION BTWN. ASPHALTIC PLUG MATERIAL & ADJACENT OVERLAY

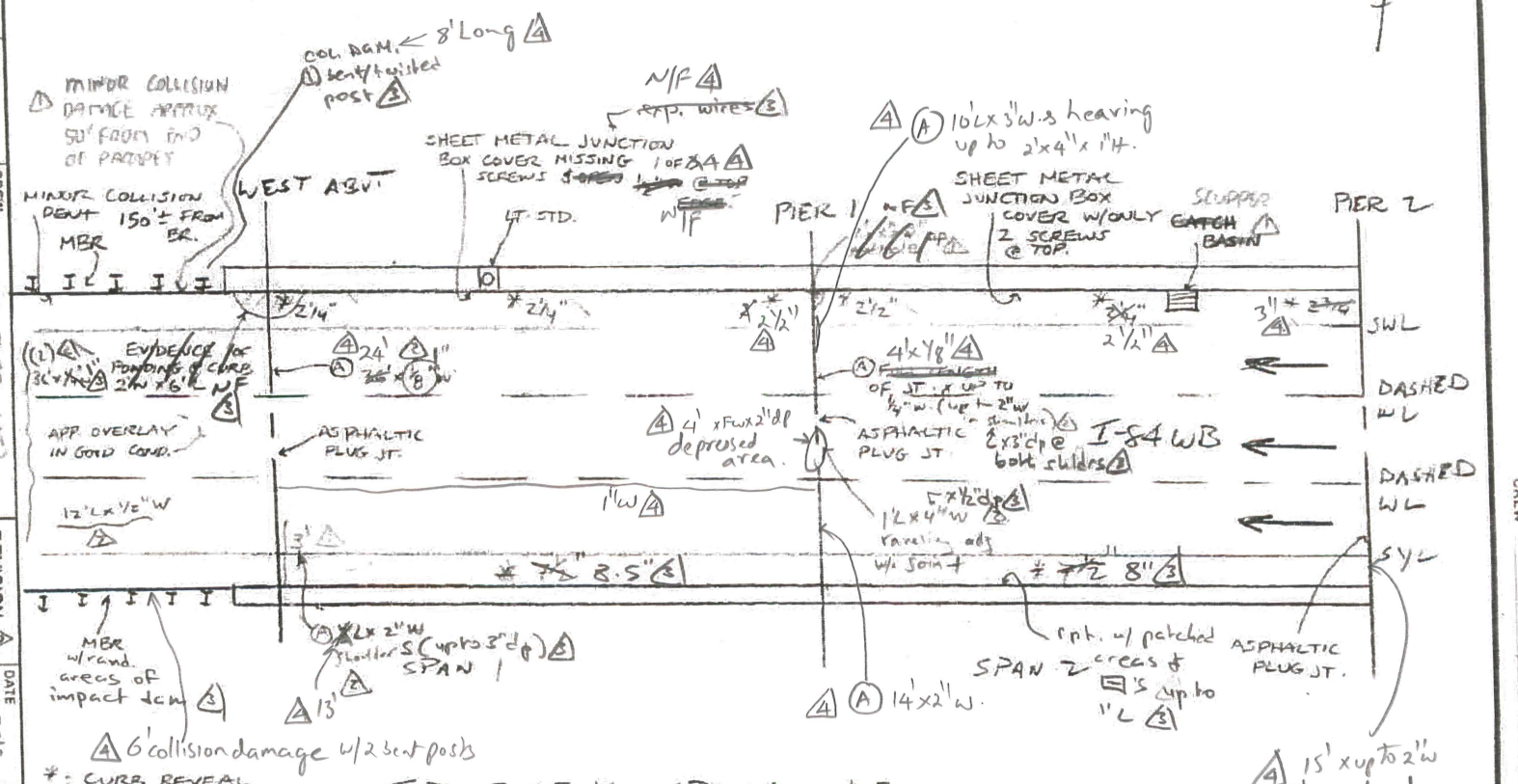

*: CURB REVEAL

TOP OF DECK - SPANS 1 & 2

GENERAL NOTES:

- OVERLAY ~~IS IN GOOD CONDITION~~ w/ lt. wear ✓
- PARAPETS W/NEWER CONC. CAPS, VERT. HLCR'S WHICH EXTEND ACCROSS TOP F.W OLDER PORTION W/LT. SCALE & MINOR COLLISION SCRAPES, SLOPE CONC. CURBS w/ ROUND UP HLCRS ✓
- ~~LT. TO MOD. SAND BUILD-UP ALONG NORTH CURB.~~
- NO VISIBLE RELIEF JT. @ WEST APPROACH ✓
- Paving seams open up 1/4" x 1/4"W FL of structure
- UPDATED CURB REVEALS @ PTT JT SHT
- Granite curbs w/ stains, chipped edges & scrapes

REVISION	DATE	CREW
1	05/08/08	KS, MA, ZAI (AF)
2	5-27-10	YS, PB, JM
3	4/25/12	YS, BH (BKR)
4	6/2/14	SRO, AKC (Gm2)

Lichtenstein
Consulting Engineers

Field Notes

PROJECT NO 170-2357 23340 | BRIDGE NO 03311
DATE 3/8/06 | SHEET 7 of 7 7/80
CREW PHH, RB | 2 of 2

REVISION	DATE	CREW
1	05/28/08	K.S., MA, ZRE (AE)
2	5-27-10	YS, PB, JM
3	4/25/12	YS, RH (BKR)
4	6/2/14	SRD, AKC (CAM2)

LEGEND (A) = SEPARATION BTWN. JOINT MATERIAL & OVERLAY

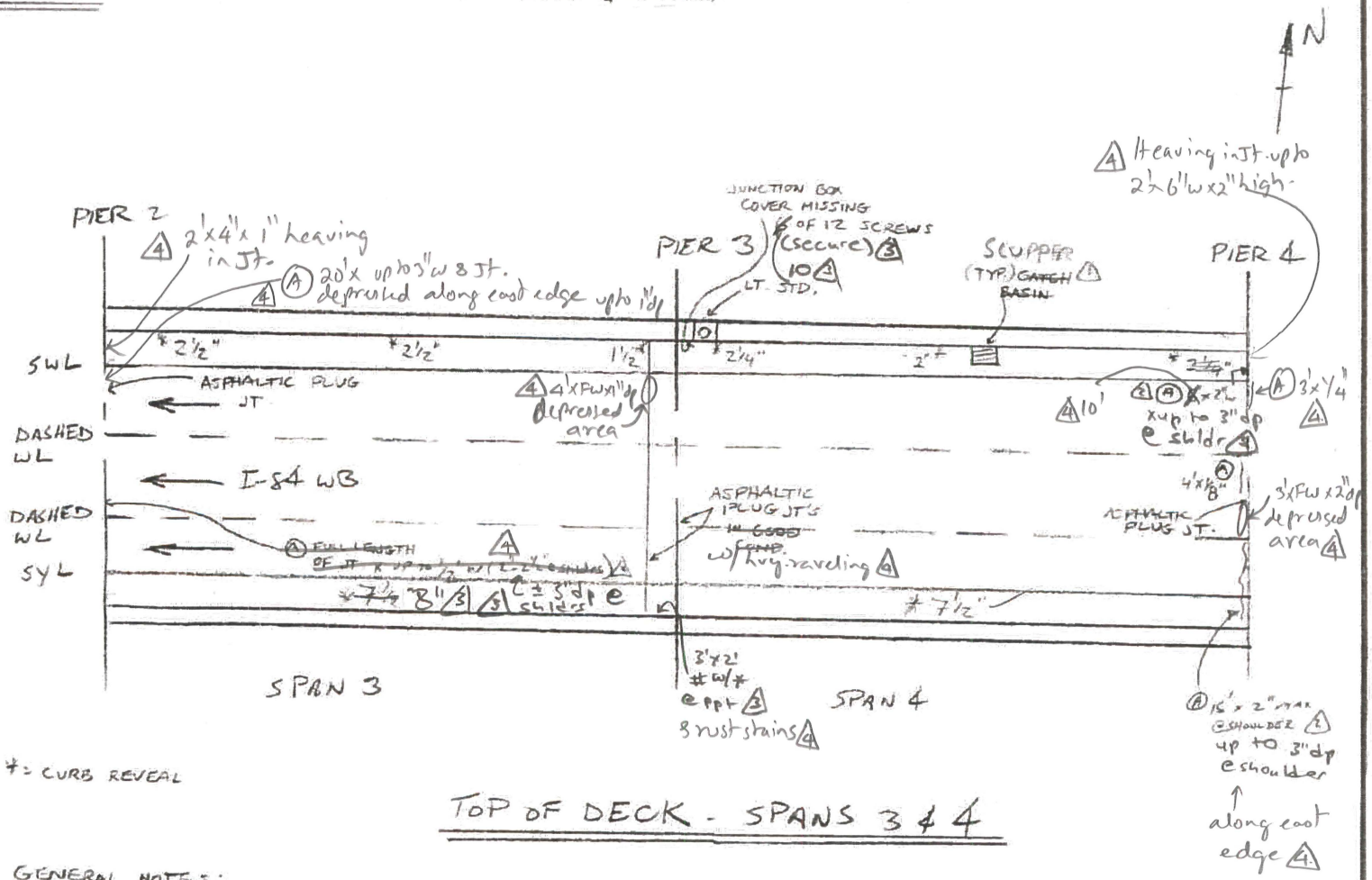

*: CURB REVEAL

TOP OF DECK - SPANS 3 & 4

GENERAL NOTES:

- PARAPETS W/NEWER CONC. CAPS, VERT. HLCR'S WHICH EXTEND ACCROSS TOP F.W. OLDER PORTION OF PPT'S W/ LT. SCALE & SCRAPE MARKS
- ~~LT SAND ALONG NORTH CURB.~~
- ~~OVERLAY IS IN GOOD CONDITION~~. see sheet 18.
- UPDATED CURB REVEALS @ PPT JT. SHEET

Field Notes

Lichtenstein
Consulting Engineers

PROJECT NO 170-2357 | BRIDGE NO 03311
DATE 3/8/06 | SHEET ~~8~~ X OF ~~4~~ 8/80
CREW PHH, RB

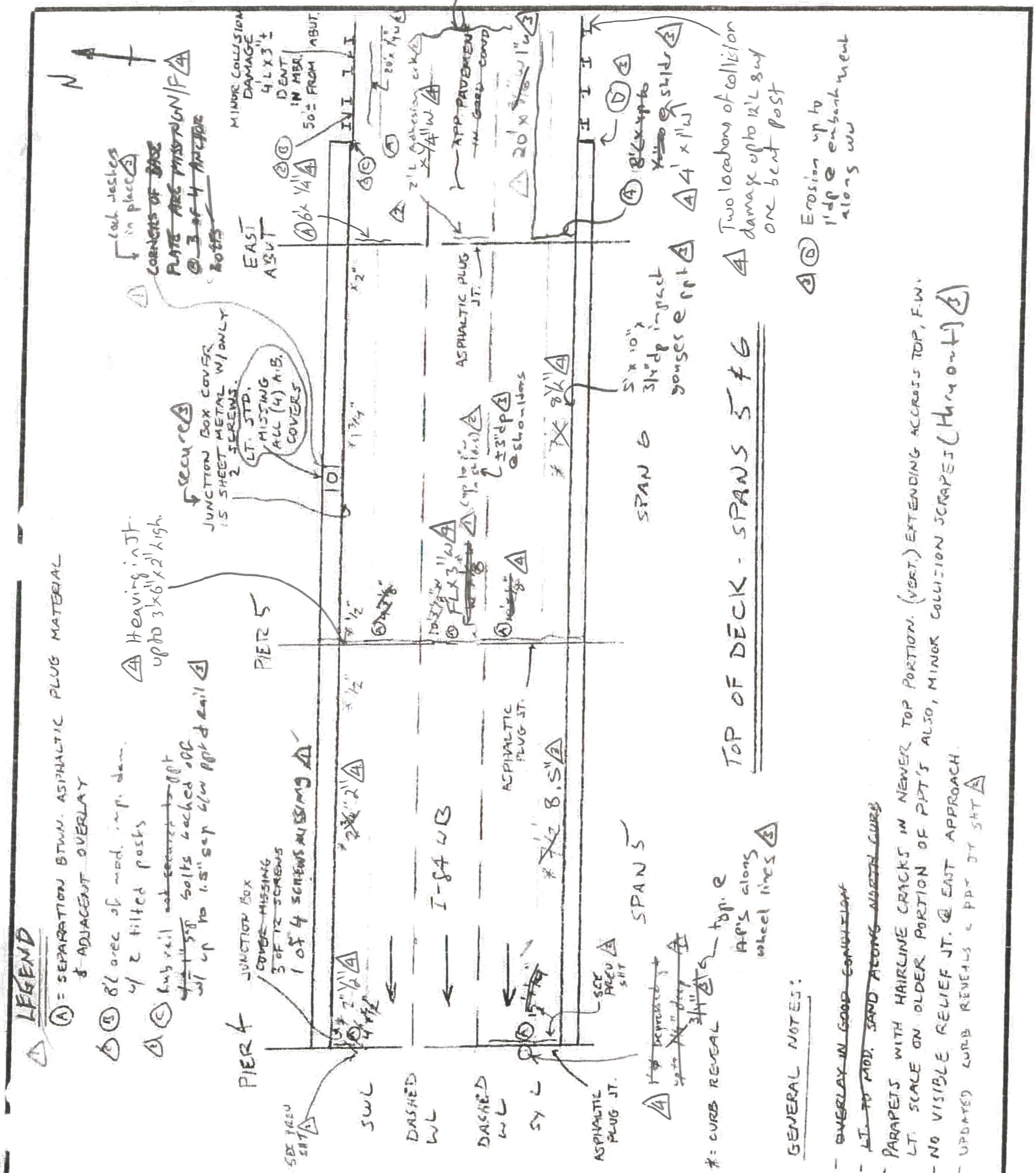

REVISION 1	DATE 05/28/08	CREW KM, MA ZKL (AJ)	REVISION 2	DATE 5-27-10	CREW YS, PB, JM
REVISION 3	DATE 4/25/12	CREW YS, BH (BKR)	REVISION 4	DATE 6/2/14	CREW SRD, AKC (GMZ)

FIELD NOTES	JOB NO. 170-3224	SEE BELOW
	BRIDGE NO. 03311	SHEET 9 OF 80

PARAPET JOINT MEASUREMENTS

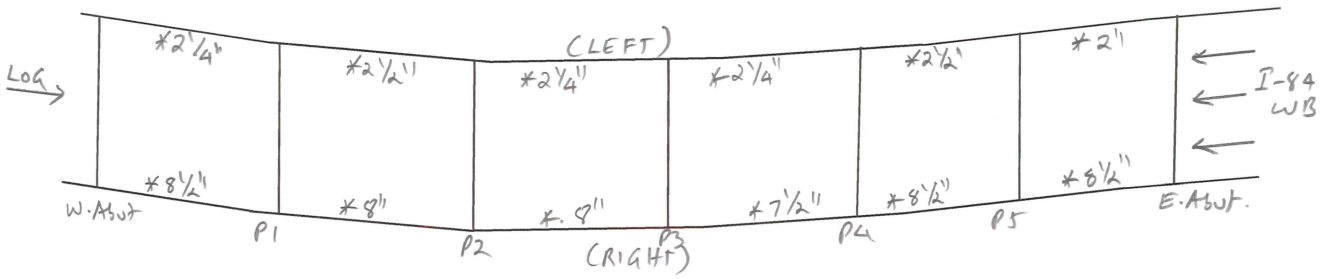

*- Curb Reveal (Typ.)

LOCATION	WINTER MEASUREMENT < 50° F				SUMMER MEASUREMENT > 50° F				JOINT TYPE
	LEFT	RIGHT	TEMP	DATE	LEFT	RIGHT	TEMP	DATE	
West Abut.					4"	2 1/8"*	75°F	6/2/14	Asphaltic Plug
PIER 1					3 5/16"	3 3/4"	↓	↓	↓
PIER 2					3 3/4"	4 1/16"			
PIER 3W					4 1/16"	4 1/8			
PIER 3E					3 1/4	4"			
PIER 4					3 9/16"	3 1/2"			
PIER 5					3 1/2"	3 7/8"			
East Abut.					2 15/16"	3 5/16"	↓	↓	↓

GENERAL NOTES:

- Measurements taken 3" down at edge of chamfers.

*- Taken at ppt. curb to appr. curb

REGULAR INSPECTION ☑ Date: 6/25/14

SUMMER / WINTER JOINT MEASUREMENTS ☐ Summer Winter

JOINT MEASUREMENTS

Form BRI-17, Rev. 9/03

Measurements Taken By: AKC

Bridge No.: 03311 I-84 WB over Rte. 72WB, 372, PanAM RR. **Town:** Plainville

Measurements Reviewed By: SRD

Deck Joint Location	Deck Joint Type[1]	Effect Span[2] (ft.)	2012 Measurements Temp °F	2012 Date: 4/25/12 Left (in.)	2012 Right (in.)	2014 Measurements Temp °F	2014 Date: 6/2/14 Left (in.)	2014 Right (in.)	Differential Movements Actual Left (in.)	Actual Right (in.)	by Formula	Comments	Difference Between Actual & Calc'd Mov't Left (in.)	Right (in.)
W. Abutment	Plug	108.1	55	4	2 1/8	75	4	2 1/8	0	0	3/16	Expansion	- 3/16	- 3/16
Pier 1	Plug	108.1	55	3 5/8	4	75	3 5/16	3 3/4	5/16	4/16	3/16	Fixed/Expansion	2/16	1/16
Pier 2	Plug	108.1	55	3 7/8	4 1/4	75	3 3/4	4 1/16	2/16	3/16	3/16	Fixed/Expansion	- 1/16	0
Pier 3W	Plug	0.0	55	4 1/16	4 1/8	75	4 1/16	4 1/8	0	0	0	Fixed	0	0
Pier 3E	Plug	0.0	55	3 5/16	4	75	3 1/4	4	1/16	0	0	Fixed	1/16	0
Pier 4	Plug	106.1	55	3 3/4	3 11/16	75	3 9/16	3 1/2	3/16	3/16	3/16	Expansion/Fixed	0	0
Pier 5	Plug	106.1	55	3 7/8	4 1/16	75	3 1/2	3 7/8	6/16	3/16	3/16	Expansion/Fixed	3/16	0
E. Abutment	Plug	106.1	55	2 15/16	3 5/16	75	2 15/16	3 5/16	0	0	3/16	Expansion	- 3/16	- 3/16

1. The "Deck Joint Type" should be "plug" for Asphaltic Plug joints, "strip" for Strip Seals, "seg." for Segmental Joints, etc.
2. The "Effective Span" is the length contributing to expansion at the joint. This should be 0 at fixed joints of single span bridges.

Reviewer's Comments:

W. Abutment measurement on the right is taken between ppt. curb and approach curb.

All other measurements were taken from chamfer to chamfer on the inside face of parapets, 3" down from the top.

All measurements were double checked.

Summer / Winter Joint Measurements: (IF ADDING OR REMOVING, SEND A COPY OF THIS FORM TO SUPERVISOR FOR REVIEW/APPROVAL WITH REASONS FOR CHANGE INDICATED)

☐ **ADD** TO SUMMER/WINTER LIST

☐ **REMOVE** FROM SUMMER/WINTER LIST

SUPERVISOR APPROVAL: _____

MASTER LIST ENTRY: _____

08/01

FIELD NOTES

BRIDGE NO. 03311	DATE: 04/22/14
CREW: SRD, BJS	SHEET 11 OF 80

POT BEARING MEASUREMENTS

Form BRI-16, Rev. 9/97

Note: Guided expansion bearing shown, non-guided expansion bearings do not have keeper bars. (see notes below)

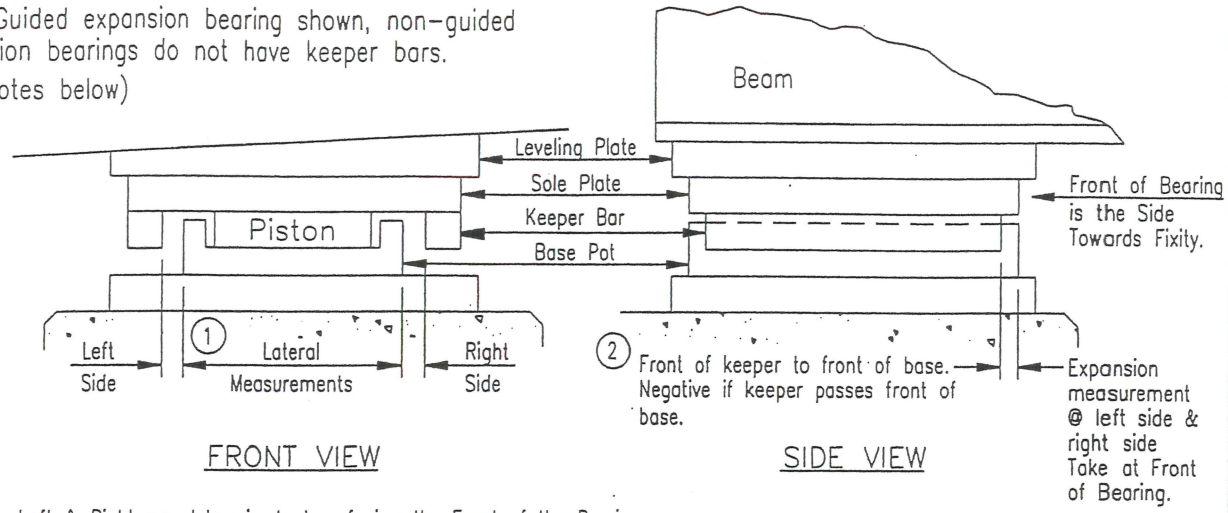

1 -Left & Right are determined when facing the Front of the Bearing.
-For non-guided bearings, measure from side of sole plate to side of piston @ center line of piston.

2 -For non-guided bearings, measure expansion from front of sole plate to front of piston @ center line of bearing.

Span No. & Substructure Unit = Span #1, W. Abutment. Temperature = 60°F

Beam	Expansion			Lateral		Comments
	Exp. Measurement		Side of Brg.	Left 1	Right 1	
	L	R	(N,S,E,W)			
G1	2"	—	E	3/16"	1/16"	Hvy. Lam rust on mas. plate, bare of pots piston. Sand accumulation around brg.
G3	2 3/16"	—	E	3/8"	0	Lt. to mod. lam. rust on mas. plate
G5	2 3/16"	—	E	3/16"	1/8"	—
G7	2 1/4"	—	E	3/16"	1/16"	Lt. accumulation of debris around mas. plate

- Guided brgs w/ key/keyways; Typ. all locations.
1 = gap between keyway & of brg.

FIELD NOTES

BRIDGE NO. 03311	DATE: 4/29/14.
CREW: SKD, AKC, BJS, CAW.	SHEET 12 OF 80

POT BEARING MEASUREMENTS

Form BRI-16, Rev. 9/97

Note: Guided expansion bearing shown, non-guided expansion bearings do not have keeper bars. (see notes below)

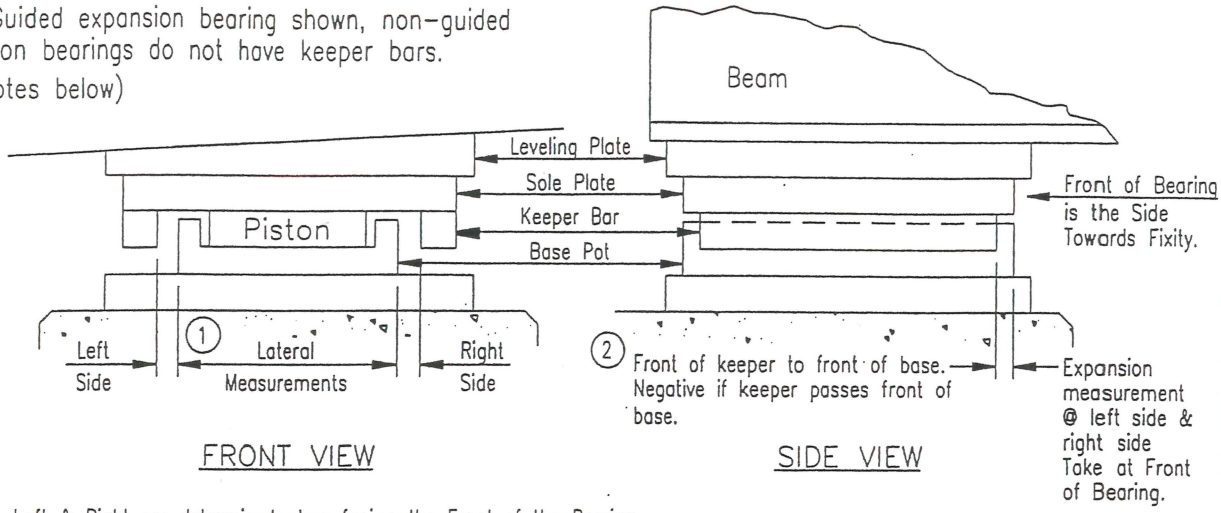

1 -Left & Right are determined when facing the Front of the Bearing.
-For non-guided bearings, measure from side of sole plate to side of piston @ center line of piston.

2 -For non-guided bearings, measure expansion from front of sole plate to front of piston @ center line of bearing.

Span No. & Substructure Unit = Span #2 @ Pier 1 Temperature = 50°F

Beam	Expansion			Lateral		Comments
	Exp. Measurement		Side of Brg.	Left 1	Right 1	
	L	R	(N,S,E,W)			
G1	2 13/16"	–	E	1/16"	1/16"	Lam. rust throughout.
G4	2 1/4"	–	E	1/16"	1/16"	Hvy rust w/ lam. rust on brg.
G5	2 9/16"	–	E	1/16"	1/8"	Hvy. rust.
G7	2 11/16"	–	E	1/16"	1/8"	Brg. w/ lam. rust.

- Brgs. w/ peeling paint & mod. rust.
- Mod. accumulation of debris around brgs.

1 = Gap between keyways & ℄ of brg.

FIELD NOTES

BRIDGE NO. 03311	DATE: See below
CREW: SRD, AKC, BJS, CAW	SHEET 13 OF 80

POT BEARING MEASUREMENTS

Form BRI-16, Rev. 9/97

Note: Guided expansion bearing shown, non-guided expansion bearings do not have keeper bars. (see notes below)

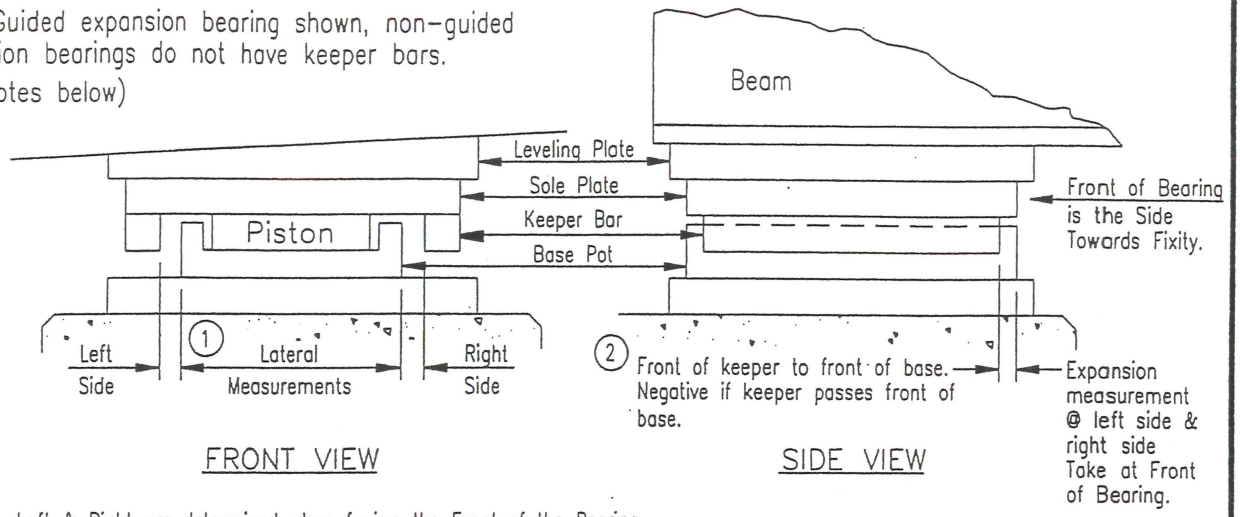

1 -Left & Right are determined when facing the Front of the Bearing.
-For non-guided bearings, measure from side of sole plate to side of piston @ center line of piston.

2 -For non-guided bearings, measure expansion from front of sole plate to front of piston @ center line of bearing.

Span No. & Substructure Unit = Span #3 @ Pier 2.

Temperature = 50°F & 60°F

Beam	Expansion			Lateral 1		Comments
	Exp. Measurement		Side of Brg.	Left	Right	
	L	R	(N,S,E,W)			
G1	3 1/8"	–	E	2	2	Mod. to hvy. lam. rust 6/7/14 @ 60°F
G3	2 11/16"	–	E	1/8"	1/16"	Lt. rust 6/7/14 @ 60°F.
G5	2 11/16"	–	E	0	1/4"	Hvy rust & peeling paint 4/29/14 @ 50°F
G7	2 13/16"	–	E	3/16"	3/16"	Mod. to hvy. rust, peeling paint 4/29/14 @ 50°F

1 Gap measured at keyway & ℄ of brg
2 Difficult to measure due to lam. rust.

FIELD NOTES

BRIDGE NO. 03311	DATE: 06/07/14
CREW: SRD, BJS	SHEET 14 OF 80

SLIDING BEARING MEASUREMENTS

Form BRI-14, Rev. 9/97

Pier 3 cap girder

Span No. = 3 & 4

Substructure Unit = Pier 3

Temperature = 70°F

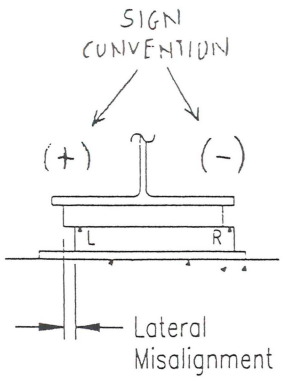

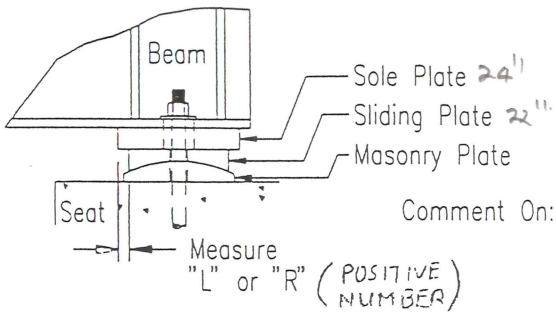

FRONT VIEW

SIDE VIEW

Comment On:
- Presence of keepers or work done on bearings.
- Undermining of bearing. Attach sketch with dimensions.
- Cracking of plates or welds.
- Condition of anchor bolts.

NEUTRAL MEASUREMENT FOR "L" AND "R" 1"

Beam	Movement				Condition			Comments
	"L"	"R"	Mode Exp. or Contr.	Lateral Misalign.	Bearing Frozen?	Normal Mov't?	Rust ? H/M/L	
Pier Cap Girder	13/16"	1 1/8"	N	5/16"	N	Y	L.	-See below.

NOTES

1. up to 1/8" IR between plates.
2. NW & NE AB nuts backed off up to 2".
3. Lt. rust on mas. & sliding plates
4. Gaps up to 1/4" x 4 1/2" d p along North edge for 2' L & for full length along east edge.
   Brg loss = +/- 16% (NO CHANGE) ORIG. MAS. PL. = 23 1/4" x 56 1/2"

FIELD NOTES

BRIDGE NO. 03311	DATE: 06/04/14
CREW: SRD, AKC	SHEET 15 OF 80

POT BEARING MEASUREMENTS

Form BRI-16, Rev. 9/97

Note: Guided expansion bearing shown, non-guided expansion bearings do not have keeper bars. (see notes below)

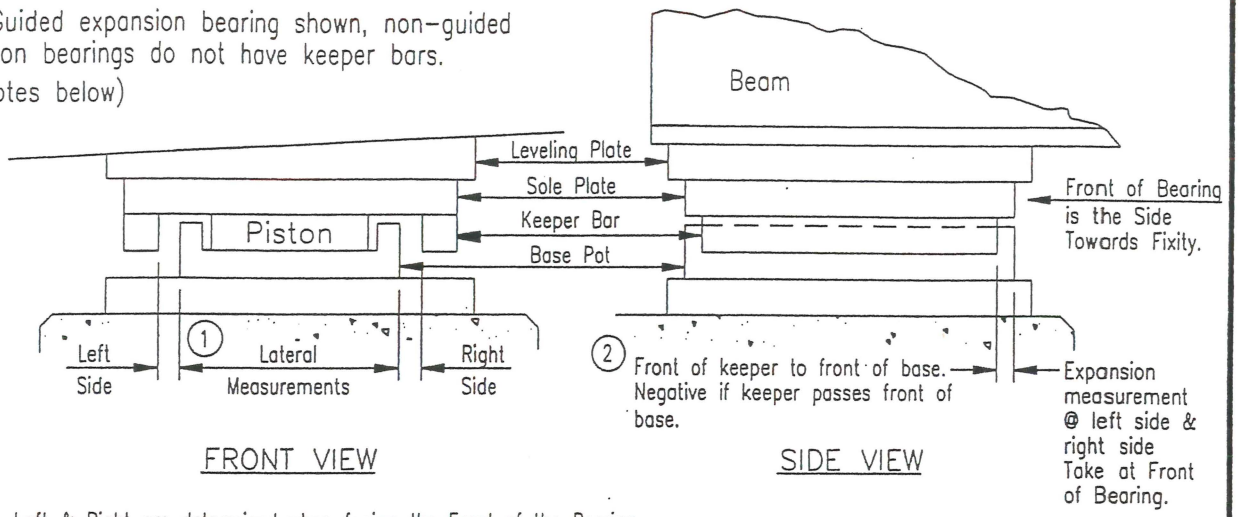

1 -Left & Right are determined when facing the Front of the Bearing.
-For non-guided bearings, measure from side of sole plate to side of piston @ center line of piston.

2 -For non-guided bearings, measure expansion from front of sole plate to front of piston @ center line of bearing.

Span No. & Substructure Unit = Span 4 @ Pier 4 Temperature = 70°F

Beam	Expansion			Lateral		Comments
	Exp. Measurement		Side of Brg.	Left 1	Right 1	
	L	R	(N,S,E,W)			
G1	2 3/4"	–	W	3/16"	0	Hvy - lam rust.
G3	2 7/16"	–	W	2	2	Lam rust on brg - up to 1/8" I.R. between BF & sole plate.
G5	2 11/16"	–	W	2	2	same as G3.
G7	2 1/2"	–	W	1/16"	1/4"	Peeling paint w/ hvy rust.

- Areas of hvy. accumulation of conc. debris on mas. plate.
1 = Gap between key way & ℄ of brg.
2 = Measurement difficult due to lam. rust.

FIELD NOTES

BRIDGE NO. 03311.	DATE: 6/4/14
CREW: SRD, AKC.	SHEET 16 OF 80

POT BEARING MEASUREMENTS

Form BRI-16, Rev. 9/97

Note: Guided expansion bearing shown, non-guided expansion bearings do not have keeper bars. (see notes below)

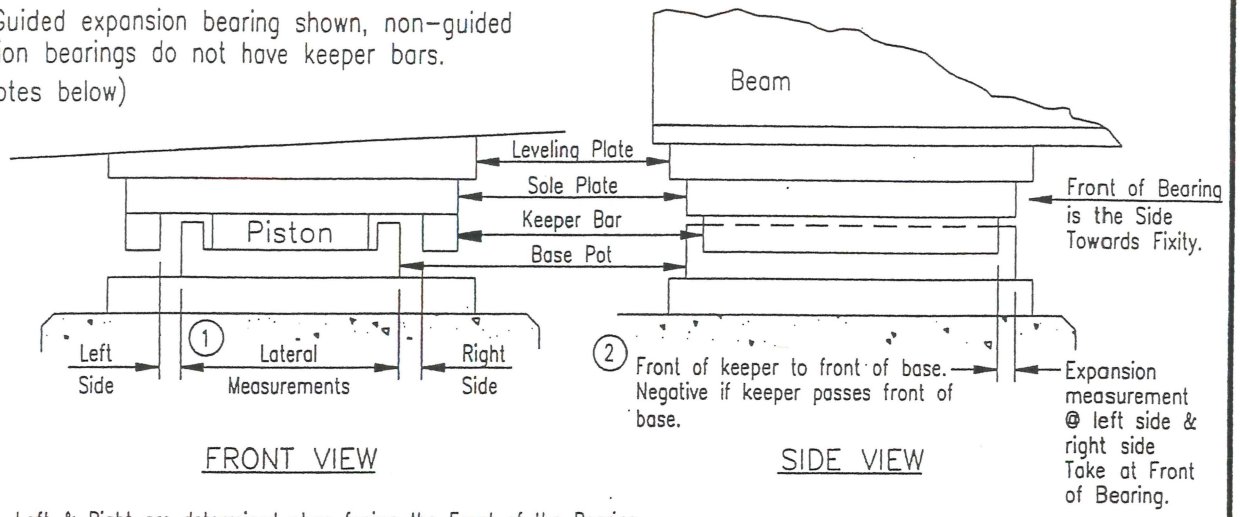

1 -Left & Right are determined when facing the Front of the Bearing.
-For non-guided bearings, measure from side of sole plate to side of piston @ center line of piston.

2 -For non-guided bearings, measure expansion from front of sole plate to front of piston @ center line of bearing.

Span No. & Substructure Unit = Span 5 at Pier 5 Temperature = 70°F

Beam	Expansion			Lateral 1		Comments
	Exp. Measurement		Side of Brg.	Left	Right	
	L	R	(N,S,E,W)			
G1	2 9/16"	–	W	2	2	Lam. rust.
G3	2 11/16"	–	W	0	1/4"	Peeling paint w/ lt. rust.
G5	2 3/4"	–	W	0	1/16"	Lam. rust shwg. accumulation of debris
G7	2 9/16"	–	W	1/16"	3/16"	Shwg. lam. rust on pot's mas. plate.

1 Lateral measurement taken adjacent to Keyway ℄ of Brg
2 measurement not possible due to lam. rust.

FIELD NOTES

BRIDGE NO. 03311	DATE: 04/22/14
CREW: SRD, BJS	SHEET 17 OF 80

POT BEARING MEASUREMENTS

Form BRI-16, Rev. 9/97

Note: Guided expansion bearing shown, non-guided expansion bearings do not have keeper bars. (see notes below)

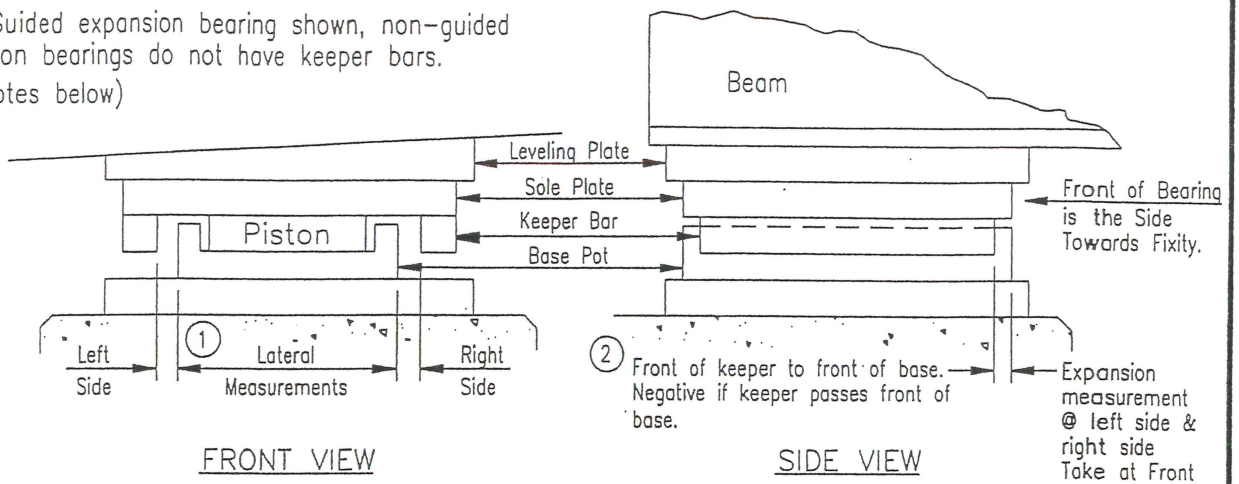

(1) -Left & Right are determined when facing the Front of the Bearing.
-For non-guided bearings, measure from side of sole plate to side of piston @ center line of piston.

(2) -For non-guided bearings, measure expansion from front of sole plate to front of piston @ center line of bearing.

Span No. & Substructure Unit = Span 6 @ E. Abut Temperature = 55°F

Beam	Expansion			Lateral		Comments
	Exp. Measurement		Side of Brg.	Left (1)	Right (1)	
	L	R	(N,S,E,W)			
G1	2 1/16"	–	W	0	1/4"	Lam. rust on mas. plate, peeling paint w/ areas of hvy. rust on brg.
G3	2 3/16"	–	W	0	3/16"	Peeling paint w/ Lt. rust
G5	2 1/8"	–	W	1/4"	1/16"	" " " "
G7	2 1/8"	–	W	3/16"	1/4"	Same as G1.

(1) = Gap between keyway & ℄ of brg.

~~30/42~~ 18/80

Field Notes

Lichtenstein
Consulting Engineers

PROJECT NO 120-2357 BRIDGE NO 03311 1
DATE 2/16/06 SHEET 27 ~~32~~ 17 OF 47 ~~82~~ 80
CREW DAL, TJS

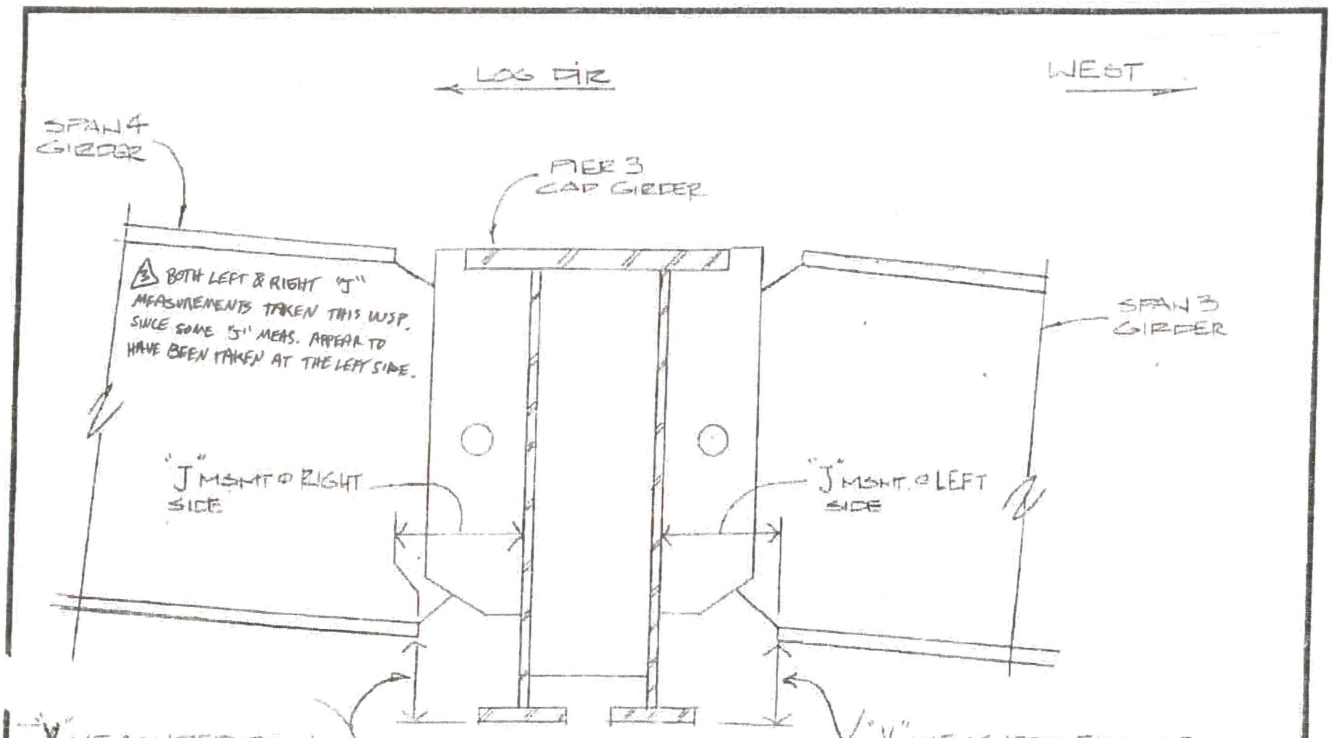

"V" MEASURED FROM LEVEL LINE OFF UNDERSIDE OF CAP GIRDER BOTTOM FLANGE (LEVEL USED) TO END OF HUNG SPAN GIRDER BOTT. FLG. AT RIGHT EDGE FACING LOG DIR.

"V" MEASURED FROM LEVEL LINE OFF UNDERSIDE OF CAP GIRDER BOTTOM FLANGE (LEVEL USED) TO END OF HUNG SPAN GIRDER BOTTOM FLANGE AT LEFT EDGE FACING LOG DIR.

NOTES:

1) DUE TO SUPERELEVATION & LONGIT SLOPE OF BRIDGE "V" MSMTS TAKEN AS NOTED ABOVE

1 NO CHANGES NOTED 3

4 No change

LOCATIONS OF "V" & "J" MSMTS

REVISION 1	DATE 5/28/08	CREW ZHJ-MA-KS (AI)	REVISION 2	DATE 5/19/10	CREW MJO, YS (BAKER)
REVISION 3	DATE 4/18/12	CREW MJO/PB (BKR)	REVISION 4	DATE 6/6/14	CREW SRD, BJS (GM2)

HINGE DATA SHEET

Form BRI-30, Rev. 9/97

Measurements Taken By: SRD Date: 6/7/14

Bridge No.: 03311 I-84 WB over Route 72 WB, Route 372 and PanAM RR Town: Plainville Measurements Reviewed By: AKC Date: 6/7/14

Hinge Located: Span 3 at Pier 3. Effective span for Movement: 0 Page: _____ of _____

Beam No.	V (IN)	J* (IN)	R (IN)	L (IN)	Secondary System Type	Gap[1] (Y/N)	Nut Restraint System	Comments
1	12 5/8	16 9/16	1 3/8	1 1/16	None.	N/A	Cotter pin.	① 3/4" @ south side (max)
2	13 3/16	16 13/16	1 1/16	1 1/16	↓	↓	↓	① 3/8" both sides; nut w/ ± 10" rotation based on paint marks (No change)
3	13 3/4	16 7/8	1 3/16	13/16	↓	↓	↓	① 1/2" @ south side (max)
4	13 3/4	16 7/8	1 3/16	13/16	↓	↓	↓	–
5	13 7/8 ✓	17	1	7/8	↓	↓	↓	① 3/8"
6	13 1/8	17 1/16	1 1/8	13/16	↓	↓	↓	Abrasion rust @ nut and at jct. of web & north hinge plate; +/- 3/8" gap between web & S. hinge plate.
7	12 6/16 ✓	16 15/16	3/4	1	↓	↓	↓	① 1/8"

Notes:

1) For Hinge assemblies with a redundant support system, indicate if there is a gap between the redundant system (bearing) and the bottom flange of the suspended girder.
2) All measurements are taken in reference to log direction.
   - **V** : Vertical misalignment of girders @ left edge of girder's bottom flange.
   - **J** : Joint opening between webs, measured just above the bottom flange fillet, on the left face of the girder's web.
3) Use a permanent marker to indicate locations of field measurements.

① IR between hanger plates & hinge (worst noted)

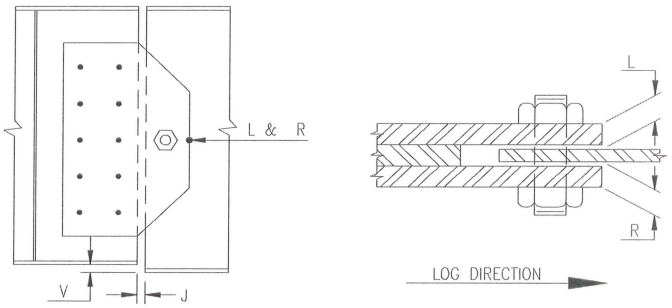

08/61

HINGE DATA SHEET

Form BRI-30, Rev. 9/97

Measurements Taken By: SRD Date: 6/7/2014

Bridge No.: 03311 I-84 WB over Route 72WB, Route 372 and B&M RR Town: Plainville Measurements Reviewed By: AKC Date: 6/7/2014

Hinge Located: Span 3 at pier 3 Effective span for Movement: 0 Page: _____ of _____

Beam No.	V (IN)	J (IN)	R (IN)	L (IN)	Secondary System Type	Gap[1] (Y/N)	Nut Restraint System	Comments (2014 Measurements)
1	12 10/16	16 9/16	1 6/16	1 1/16	None	N/A	Cotter Pin	See previous sheet.
2	13 3/16	16 13/16	1 1/16	1 1/16	None	N/A	Cotter Pin	See previous sheet.
3	13 12/16	16 14/16	1 3/16	13/16	None	N/A	Cotter Pin	See previous sheet.
4	13 12/16	16 14/16	1 3/16	13/16	None	N/A	Cotter Pin	See previous sheet.
5	13 14/16	17	1	14/16	None	N/A	Cotter Pin	See previous sheet.
6	13 2/16	17 1/16	1 2/16	13/16	None	N/A	Cotter Pin	See previous sheet.
7	12 6/16	16 15/16	12/16	1	None	N/A	Cotter Pin	See previous sheet.

Notes:

1) For Hinge assemblies with a redundant support system, indicate if there is a gap between the redundant system (bearing) and the bottom flange of the suspended girder.
2) All measurements are taken in reference to log direction.
   - **V** : Vertical misalignment of girders @ left edge of girder's bottom flange.
   - **J** : Joint opening between webs, measured just above the bottom flange fillet, on the left face of the girder's web.
3) Use a permanent marker to indicate locations of field measurements.

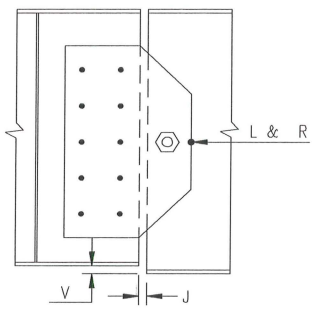

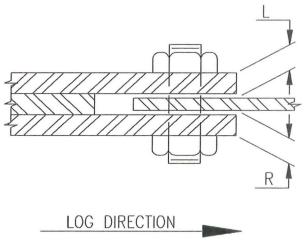

08/02

HINGE ANALYSIS SHEET

Form BRI-30, Rev. 9/97

Measurements Taken By: MJO/PB Date: 4/18/2012

Bridge No.: 03311 I-84 WB over Route 72WB, Route 372 and B&M RR Town: Plainville Measurements Reviewed By: WMK Date: 5/16/2012

Hanger Location: Span 3 at pier 3 Effective span for Movement: 0 Page: _____ of _____

Beam No.	V (in)	J (in)	R (in)	L (in)	Secondary System Type	Gap[1] (Y/N)	Nut Restraint System	Comments (2012 Measurements)
1	12 10/16	16 9/16	1 6/16	1 1/16	None	N/A	Cotter Pin	See 2012 field sketches for notes.
2	13 3/16	16 13/16	1 1/16	1 1/16	None	N/A	Cotter Pin	See 2012 field sketches for notes.
3	13 12/16	16 14/16	1 3/16	14/16	None	N/A	Cotter Pin	See 2012 field sketches for notes.
4	13 12/16	16 14/16	1 3/16	14/16	None	N/A	Cotter Pin	See 2012 field sketches for notes.
5	13 12/16	17	1	14/16	None	N/A	Cotter Pin	See 2012 field sketches for notes.
6	13 2/16	17 1/16	1 2/16	14/16	None	N/A	Cotter Pin	See 2012 field sketches for notes.
7	12 8/16	16 15/16	12/16	1	None	N/A	Cotter Pin	See 2012 field sketches for notes.

Notes:

1) For Hinge assemblies with a redundant support system, indicate if there is a gap between the redundant system (bearing) and the bottom flange of the suspended girder.
2) All measurements are taken in reference to log direction.
   - **V** : Vertical misalignment of girders @ left edge of girder's bottom flange.
   - **J** : Joint opening between webs, measured just above the bottom flange fillet, on the left face of the girder's web.
3) Use a permanent marker to indicate locations of field measurements.

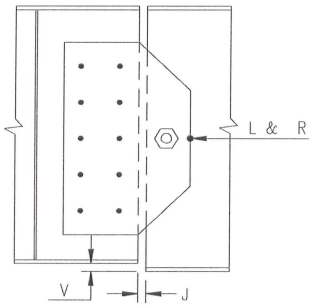

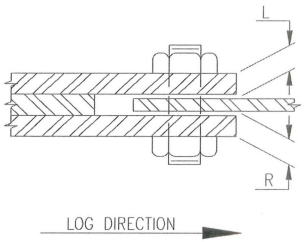

21/40

HINGE ANALYSIS SHEET

Form BRI-30, Rev. 9/97

Measurements Taken By: -- Date: --

Bridge No.: 03311 I-84 WB over Route 72WB, Route 372 and B&M RI Town: Plainville Measurements Reviewed By: AKC Date: 6/7/14

Hanger Location: Span 3 at pier 3 Effective span for Movement: 0 Page: of

Beam No.	V (mm)	J (mm)	R (mm)	L (mm)	Reviewer's Comments (Comparison sheet)
1	0	0	0	0	
2	0	0	0	0	
3	0	0	0	- 1/16	
4	0	0	0	- 1/16	
5	2/16	0	0	0	
6	0	0	0	- 1/16	
7	- 2/16	0	0	0	
					General: Differences greater than 1/8" are shaded and were double checked in the field.

Additional Review Comments:

All 2014 measurements were compared against the 2012 and 2010 measurements and not the 2011 measurements due to inconsistencies in the 2011 measurements and not all hinges being measured in 2011.

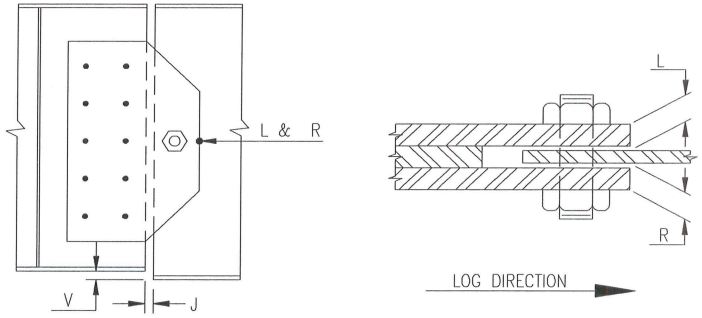

22/40

HINGE DATA SHEET

Form BRI-30, Rev. 9/97

Measurements Taken By: SRD Date: 6/7/14

Bridge No.: 03311 I-84 WB over Route 72 WB, Route 372 and PanAM RR Town: Plainville Measurements Reviewed By: AKC Date:

Hinge Located: Span 4 at Pier 3. Effective span for Movement: 0 Page: of

Beam No.	V (IN)	J* (IN) L	J* (IN) R	R (IN)	L (IN)	Secondary System Type	Gap[1] (Y/N)	Nut Restraint System	Comments
1	14 3/4*	16 5/8	17 1/16	1 1/4 *	1 1/8*	NONE	N/A	cotter pin	(1) 5/8"
2	15 1/16	16 11/16	17 1/16	15/16	1 1/16	↓	↓	↓	(1) up to 3/16"
3	15 1/2	16 5/8	16 7/8	7/8	1	↓	↓	↓	(1) 1/8"
4	15 3/4*	16 1/2	16 15/16	1 1/8	3/4	↓	↓	↓	(1) ± 3/8"
5	15 1/2	16 9/16	17	1	15/16	↓	↓	↓	(1) 1/8"
6	15 1/16	16 13/16	17 3/16	1	7/8	↓	↓	↓	
7	14 3/8	16 5/16	16 9/16	15/16	13/16	↓	↓	↓	
									* changes in measurement due to rust/lam. rust removed.

Notes:

1) For Hinge assemblies with a redundant support system, indicate if there is a gap between the redundant system (bearing) and the bottom flange of the suspended girder.
2) All measurements are taken in reference to log direction.
   - **V** : Vertical misalignment of girders @ left edge of girder's bottom flange.
   - **J** : Joint opening between webs, measured just above the bottom flange fillet, on the left face of the girder's web.
3) Use a permanent marker to indicate locations of field measurements.

(1) IR between hanger plates and web (max. noted)
(2) 'J' measurements taken on both sides as per 2012 comments.

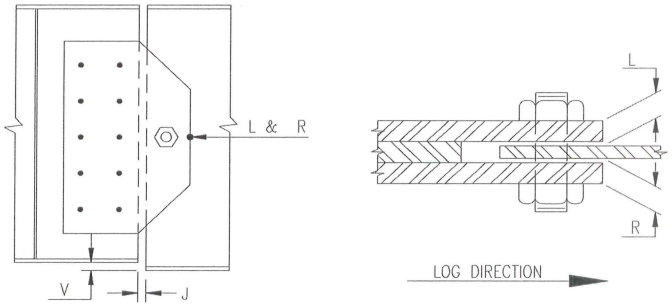

23/80

HINGE DATA SHEET

Form BRI-30, Rev. 9/97

Measurements Taken By: SRD Date: 6/7/2014

Bridge No.: 03311 I-84 WB over Route 72 WB, Route 372 and B&M RR Town: Plainville Measurements Reviewed By: AKC Date: 6/7/2014

Hinge Located: Span 4 at pier 3 Effective span for Movement: 0 Page: _____ of _____

Beam No.	V (IN)	J* (IN)	R (IN)	L (IN)	Secondary System Type	Gap[1] (Y/N)	Nut Restraint System	Comments (2014 Measurements)
1	14 12/16	16 10/16	1 4/16	1 2/16	None	N/A	Cotter Pin	See previous sheet.
2	15 1/16	16 11/16	15/16	1 1/16	None	N/A	Cotter Pin	See previous sheet.
3	15 8/16	16 10/16	14/16	1	None	N/A	Cotter Pin	See previous sheet.
4	15 12/16	16 8/16	1 2/16	12/16	None	N/A	Cotter Pin	See previous sheet.
5	15 8/16	16 9/16	1	15/16	None	N/A	Cotter Pin	See previous sheet.
6	15 1/16	16 13/16	1	14/16	None	N/A	Cotter Pin	See previous sheet.
7	14 6/16	16 5/16	15/16	13/16	None	N/A	Cotter Pin	See previous sheet.
								* = Left "J" measurements used for comparison as per 2012 notes.

Notes:

1) For Hinge assemblies with a redundant support system, indicate if there is a gap between the redundant system (bearing) and the bottom flange of the suspended girder.
2) All measurements are taken in reference to log direction.
   - **V** : Vertical misalignment of girders @ left edge of girder's bottom flange.
   - **J** : Joint opening between webs, measured just above the bottom flange fillet, on the left face of the girder's web.
3) Use a permanent marker to indicate locations of field measurements.

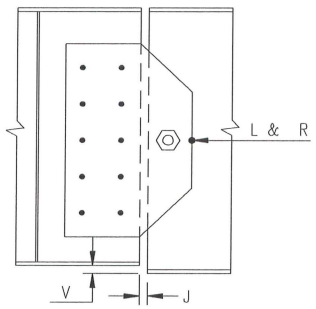

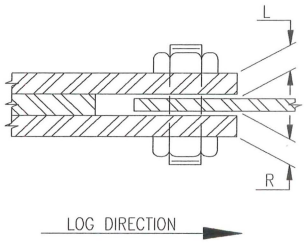

24/80

HINGE ANALYSIS SHEET

Form BRI-30, Rev. 9/97

Measurements Taken By: MJO/PB Date: 4/18/2012

Bridge No.: 03311 I-84 WB over Route 72 WB, Route 372 and B&M RR Town: Plainville Measurements Reviewed By: WMK Date: 5/16/2012

Hanger Location: Span 4 at pier 3 Effective span for Movement: 0 Page: _____ of _____

Beam No.	V (IN)	J (IN)	R (IN)	L (IN)	Secondary System Type	Gap[1] (Y/N)	Nut Restraint System	Comments (2012 Measurements)
1	14 8/16	16 10/16	1 4/16	1 2/16	None	N/A	Cotter Pin	See 2012 field sheets for notes.
2	15 1/16	16 11/16	15/16	1	None	N/A	Cotter Pin	See 2012 field sheets for notes.
3	15 8/16	16 10/16	14/16	1	None	N/A	Cotter Pin	See 2012 field sheets for notes.
4	15 9/16	16 9/16	1 2/16	12/16	None	N/A	Cotter Pin	See 2012 field sheets for notes.
5	15 8/16	16 9/16	1	15/16	None	N/A	Cotter Pin	See 2012 field sheets for notes.
6	15 2/16	16 13/16	1	14/16	None	N/A	Cotter Pin	See 2012 field sheets for notes.
7	14 6/16	16 5/16	15/16	13/16	None	N/A	Cotter Pin	See 2012 field sheets for notes.

Notes:

1) For Hinge assemblies with a redundant support system, indicate if there is a gap between the redundant system (bearing) and the bottom flange of the suspended girder.
2) All measurements are taken in reference to log direction.
   - **V** : Vertical misalignment of girders @ left edge of girder's bottom flange.
   - **J** : Joint opening between webs, measured just above the bottom flange fillet, on the left face of the girder's web.
3) Use a permanent marker to indicate locations of field measurements.

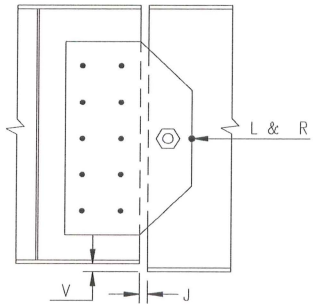

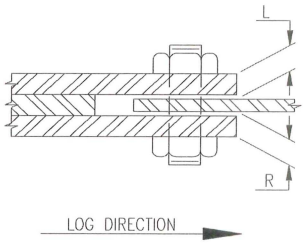

25/90

HINGE ANALYSIS SHEET

Form BRI-30, Rev. 9/97

Measurements Taken By: -- Date: --

Bridge No.: 03311 I-84 WB over Route 72 WB, Route 372 and B&M RR Town: Plainville Measurements Reviewed By: AKC Date:

Hanger Location: Span 4 at pier 3 Effective span for Movement: 0 Page: of

Beam No.	V (IN)	J (IN)	R (IN)	L (IN)	Reviewer's Comments (Comparison Sheet)
1	4/16	0	0	0	V difference due to rust removed from the bottom flange at the measurment location.
2	0	0	0	1/16	
3	0	0	0	0	
4	3/16	- 1/16	0	0	V difference due to rust removed from the bottom flange at the measurment location.
5	0	0	0	0	
6	- 1/16	0	0	0	
7	0	0	0	0	
					General: Differences greater than 1/8" are shaded and were double checked in the field.

Additional Review Comments:

All 2014 measurements were compared against the 2012 and 2010 measurements and not the 2011 measurements due to inconsistencies in the 2011 measurements and not all hinges being measured in 2011.

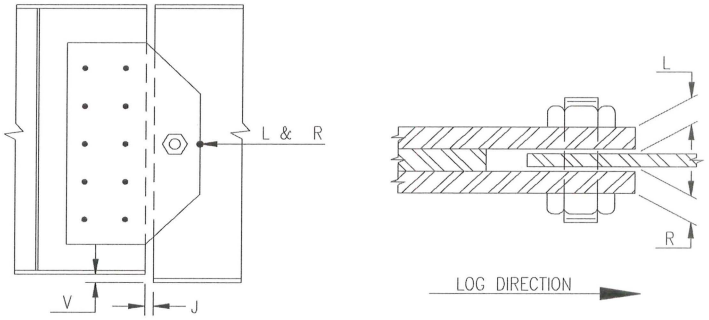

26/90

GM2	**FIELD NOTES**	JOB NO. 170-3224	BRIDGE NO. 03311
		DATE: 04/22/2014	SHEET 27 of 80
		CREW: SRD, BJS	

GENERAL NOTES (UNDERSIDE OF DECK AND FRAMING):

- PVC deck weep pipes extend below the bottom flanges except where noted. All weep pipe support brackets are welded to the lower portion of web.
- Poor quality welds between cross frame lower connection to stiffeners at numerous locations. Cracked welds are noted at these locations.
- There is a 4" diameter fiberglass conduit along the north parapet.
- There are extra stiffeners attached to the interior girders near the bearings which are stitch welded.
- The underside of deck exhibits patterned rust spots from rebar chairs at random locations.

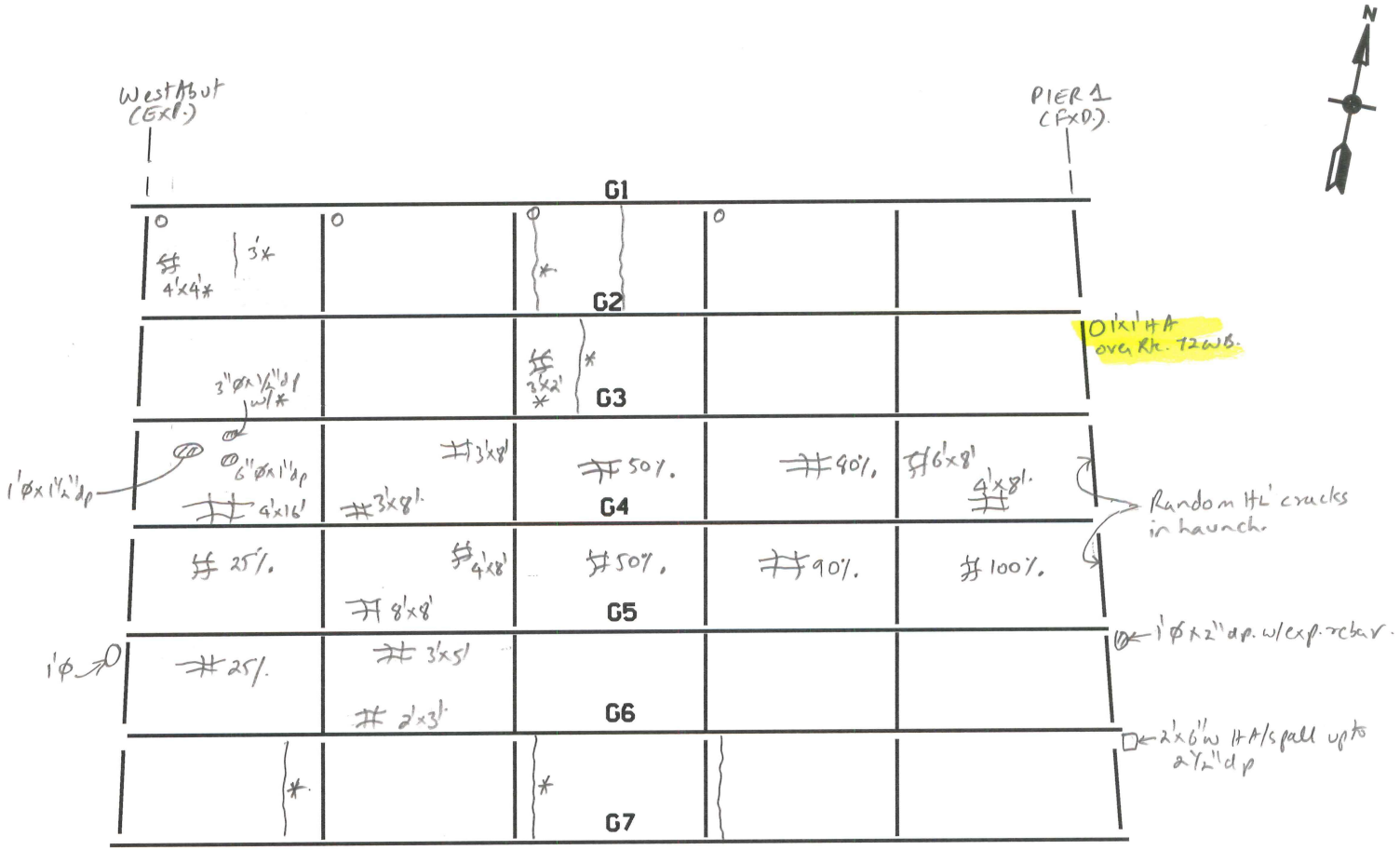

UNDERSIDE OF DECK - SPAN 1

(N.T.S.)

- See sheet 30 for notes.

LEGEND:

- HOLLOW AREA
- SHALLOW REBAR
- SPALL AREA
- SPALL AREA WITH EXPOSED REBAR
- MAPCRACKS
- HAIRLINE CRACKS
- EFFLORESCENCE IS PRESENT
- HONEYCOMB AREA
- SCALE AREA

(O - PVC DECK WEEP PIPE.

REVISION	DATE	CREW
REVISION	DATE	CREW

EMC2 ASSOCIATES

FIELD NOTES

JOB NO. 170-3224

DATE: 04/22/14

CREW: SKD, BJJ

BRIDGE NO. 03311

SHEET 28 OF 90

GM2 ASSOCIATES	FIELD NOTES	JOB NO.170-3224	BRIDGE NO. 03311
		DATE: 04/22/14	SHEET 29 OF 80
		CREW: SRD, BJS	

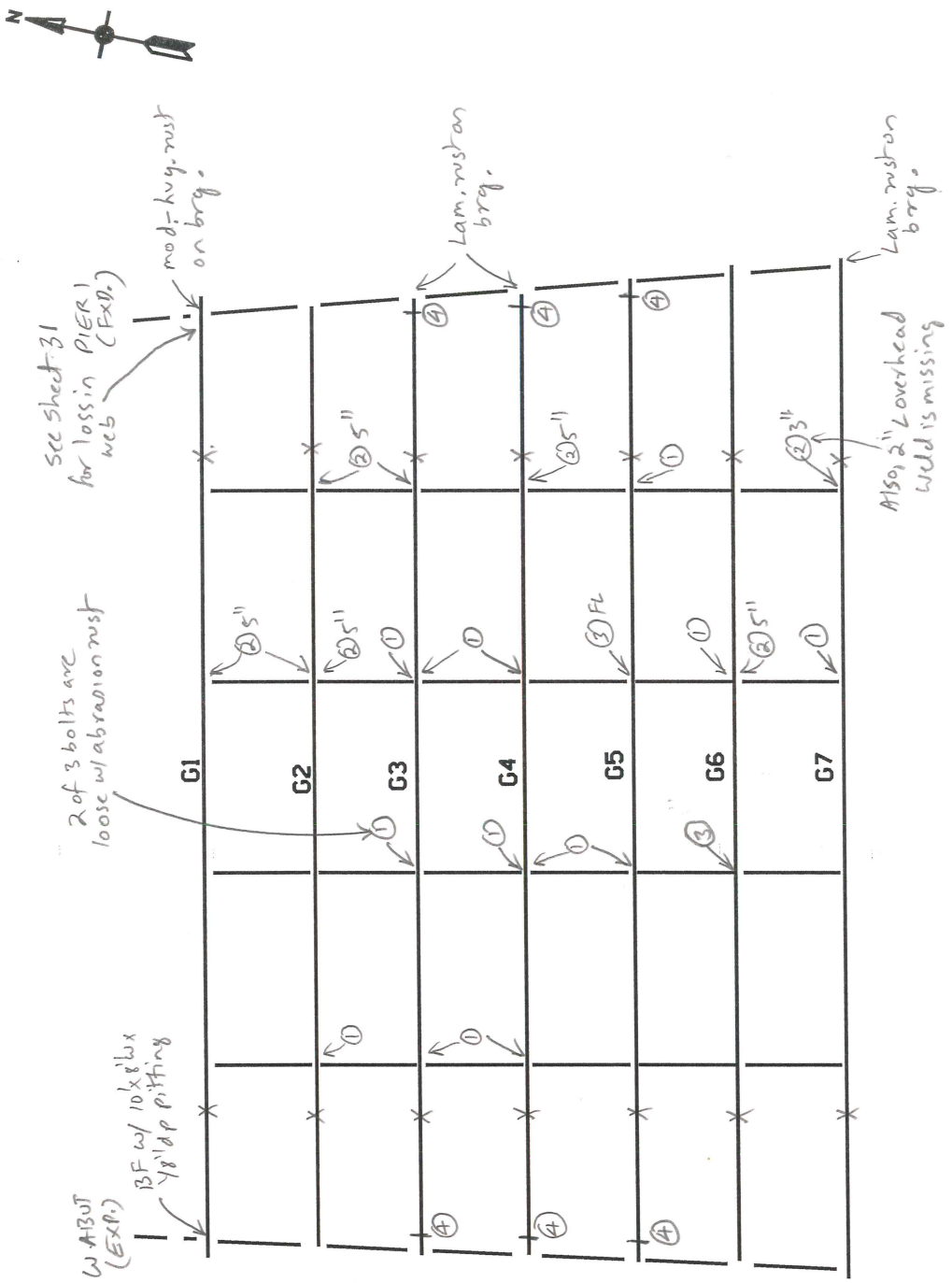

FRAMING PLAN - SPAN 1

(N.T.S.)

- See sheet 30 for notes.

LEGEND:
—*— BOTTOM FLANGE TRANSITION

REVISION 1	DATE	CREW	REVISION 3	DATE	CREW
REVISION 2	DATE	CREW	REVISION 4	DATE	CREW

GM2	**FIELD NOTES**	JOB NO. 170-3224	BRIDGE NO. 03311
		DATE: 04/22/2014	SHEET 30 of 80
		CREW: SRD, BJS	

GENERAL NOTES – SPAN 1:

- Fixed bearings at Pier 1 for G2 & G6 exhibit areas of light rust and other bearings exhibit peeling paint with moderate to heavy rust. See framing plan sheet also.
- Girders exhibit areas of peeling paint with light rust covering less than 10% of steel surfaces.

DETERIORATION NOTES (FRAMING):

1. Cross frame to stiffener welded connection cracked and retrofitted with bolts. Random load crushing washers not crushed.
2. Cracked horizontal weld between cross frame lower angle to stiffener connection – Size noted.
3. Missing/not fused weld between cross frame lower angle to stiffener connection.
4. Stitch welded stiffener on both sides of web.

~~45/90~~

Baker	☒ FIELD ORIGINAL ☐ TRANSCRIBED BY: ____	STRUCTURE: 3311	DATE: 5/13/10
		CREW: YS, JW	SHEET: ~~45/85~~ 31/80

DESCRIPTION:

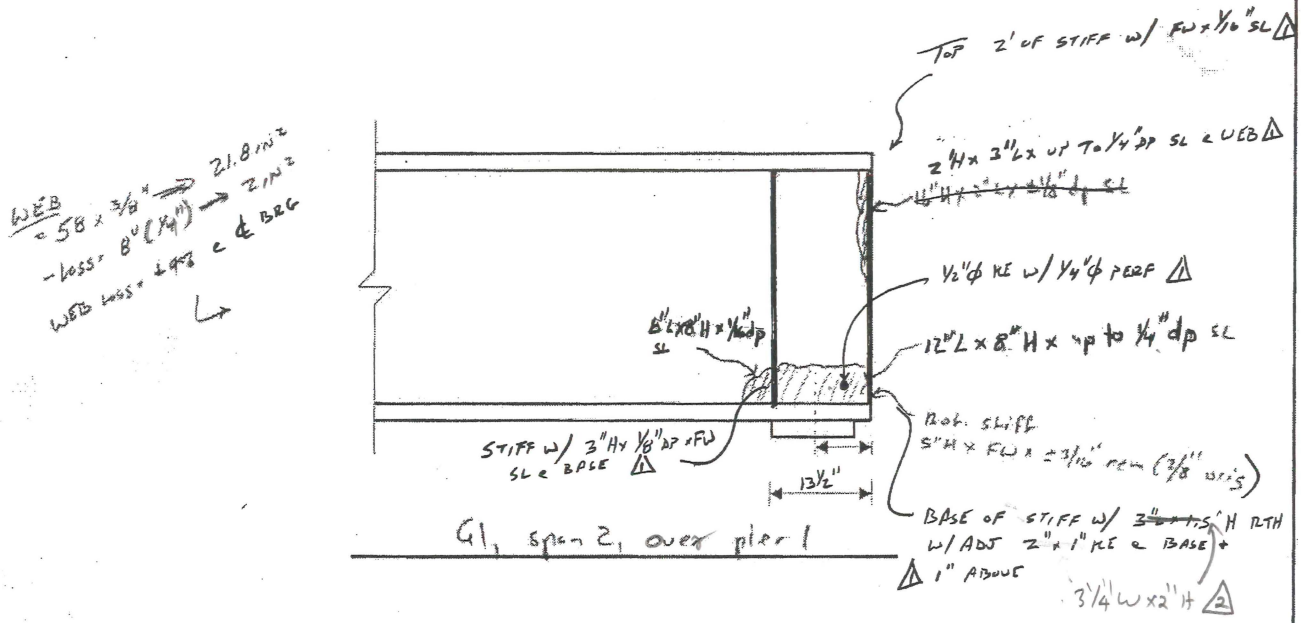

G1, span 2, over pier 1

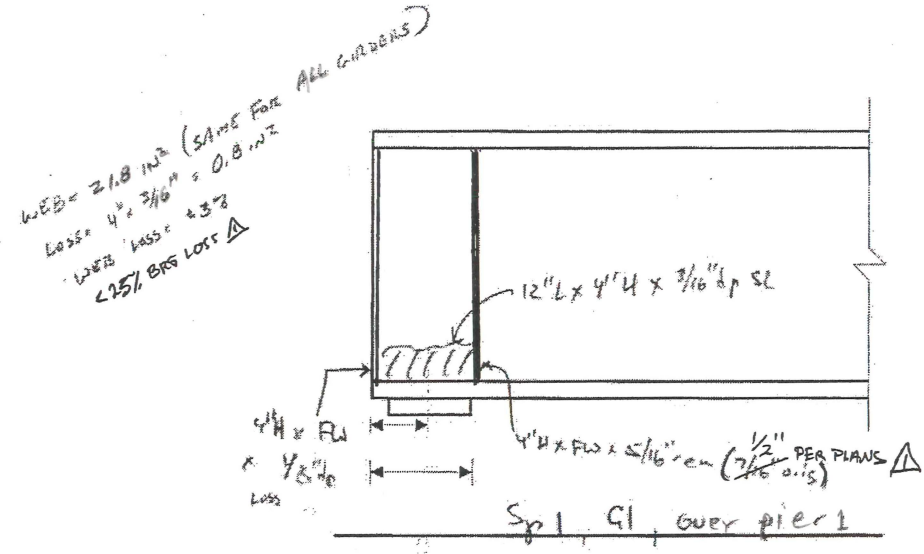

Sp 1, G1, over pier 1

LEGEND

- HOLLOW AREA
- SHALLOW REBAR
- SPALL AREA
- SPALL AREA WITH EXPOSED REBAR
- MAP CRACKS (MPC) OR HAIRLINE MAP CRACKS (HLMPC)
- HAIRLINE CRACK (HLC) OR CRACKS (CRK)
- HONEY COMB AREA
- SCALE AREA (HVY, MED OR LT)
- WITH EFFLORESCENCE

REV. NO:	DATE:	COMPANY:	CREW:
1	4/13/12	BAKER	PB, MJO
2	4/29/14	GM2	SRD, AKC, BJS, CAW

REV: JC - 02/17/09

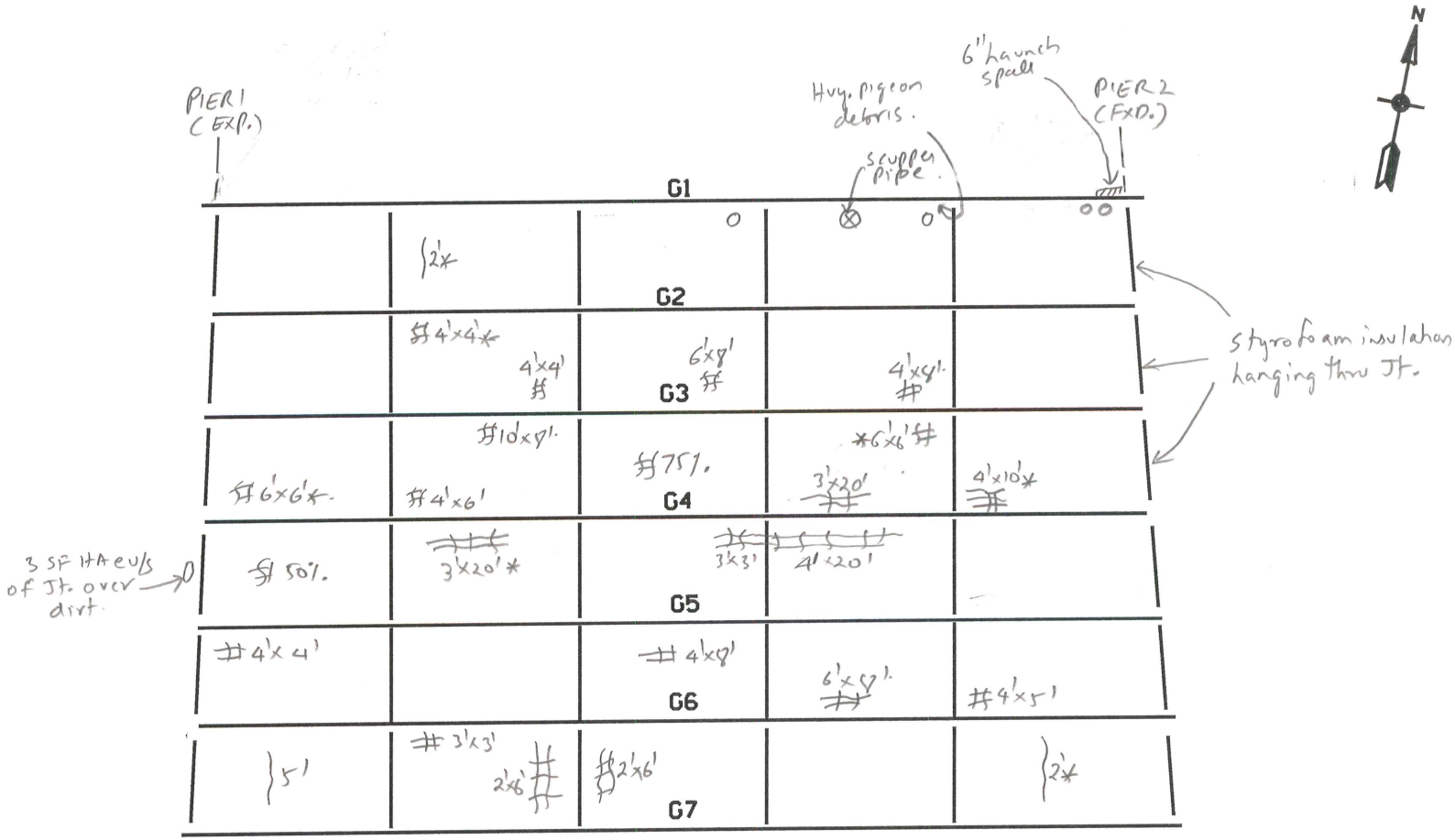

UNDERSIDE OF DECK - SPAN 2

(N.T.S.)

- See Sheet 34 for notes.

LEGEND:

- HOLLOW AREA
- SHALLOW REBAR
- SPALL AREA
- SPALL AREA WITH EXPOSED REBAR
- MAPCRACKS
- HAIRLINE CRACKS
- EFFLORESCENCE IS PRESENT
- HONEYCOMB AREA
- SCALE AREA

O - PVC DECK WEEP PIPE

REVISION	DATE	CREW
REVISION 1	DATE	CREW
REVISION 2	DATE	CREW
REVISION 3	DATE	CREW
REVISION 4	DATE	CREW

GMA ASSOCIATES

FIELD NOTES

JOB NO. 170-3224

DATE: 04/29/14

CREW: SKD, ARL, BJS, CMJ

BRIDGE NO. 03311

SHEET 32 OF 80

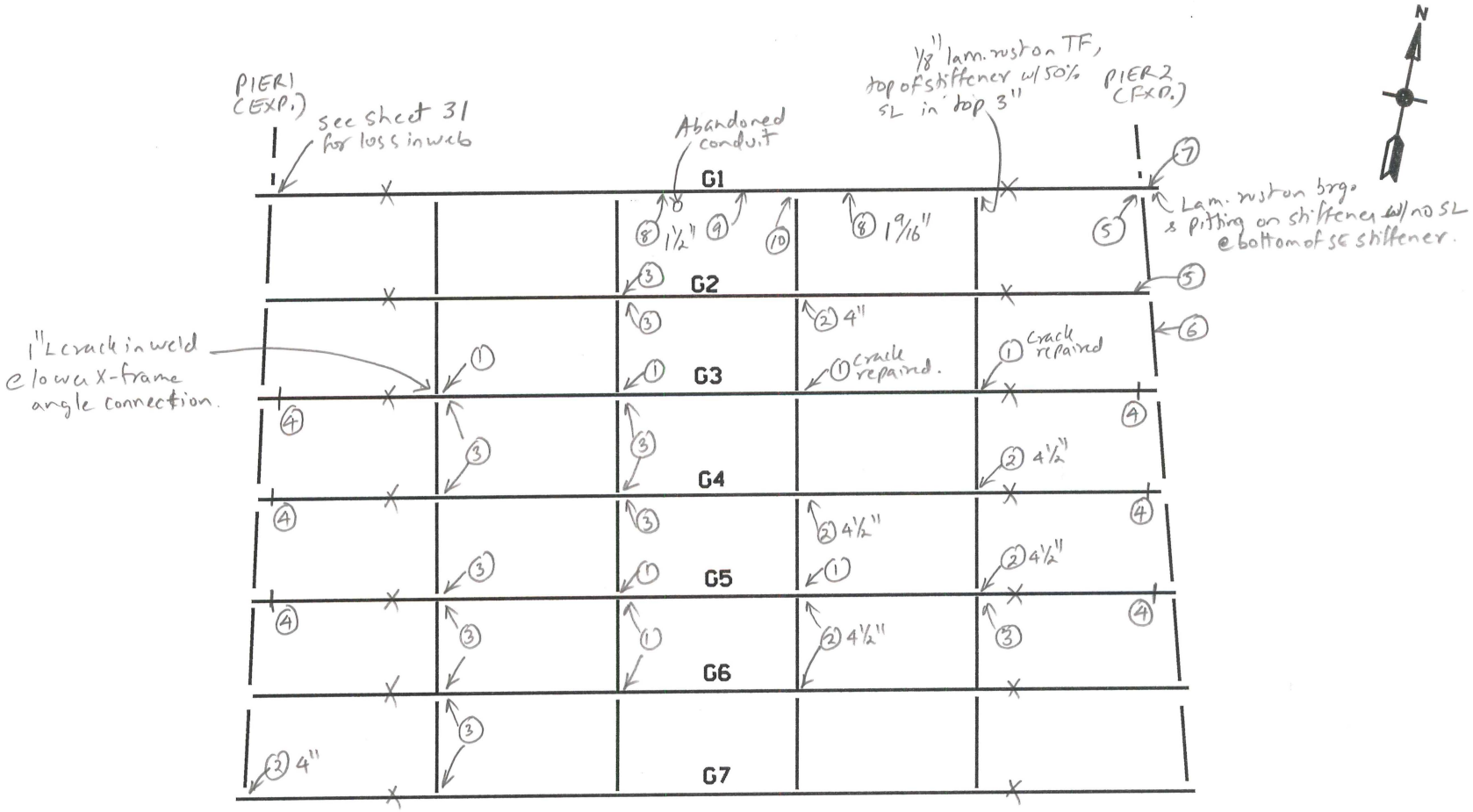

FRAMING PLAN - SPAN 2

(N.T.S.)

- see sheet 34 for notes.

LEGEND:

—✱— BOTTOM FLANGE TRANSITION

REVISION	DATE	CREW	REVISION	DATE	CREW
REVISION	DATE	CREW	REVISION	DATE	CREW

GM2 ASSOCIATES

FIELD NOTES

JOB NO. 170-3224

DATE: 04/29/14

CREW: SKD, AKC, BJS, CAW

BRIDGE NO. 03311

SHEET 33 OF 80

GENERAL NOTES – SPAN 2:

- Fixed bearings at Pier 2 exhibit light rust except for G1 & G7 bearings which exhibit areas of moderate to heavy. See framing plan sheet also.
- Moderate to heavy accumulation of debris around the fixed bearings.
- Girders exhibit areas of peeling paint with light rust covering less than 30% of steel surfaces.
- Numerous transverse cracks in the deck overhang on the south side have been repaired with epoxy coating.

DETERIORATION NOTES (FRAMING):

1. Cross frame to stiffener welded connection cracked and retrofitted with bolts.
2. Cracked horizontal weld between cross frame lower angle to stiffener connection – Size noted.
3. Previously noted cracked weld rewelded, spot painted and with light rust.
4. Stitch welded stiffener on both sides of web.
5. Missing/not fused horizontal weld at end diaphragm or cross frame to stiffener connection (upper & lower).
6. End diaphragm angle installed upside down with missing welds.
7. 3 of 4 bearing stiffeners with up to 5/16" remaining at bottom 4", top of NE stiffener with 1/4" remaining at top 4" and top 2" of SE stiffener with section loss up to knife edge and rust hole up to 4" wide x 1-1/2" high.
8. Bottom flange south leg with laminar rust with average minimum thickness noted in this panel.
9. 1/8" laminar rust for 9" wide x 30" long in top and bottom flanges, laminar rust along the base of the web 4" high x 3' long and in stiffener 4" wide x full height.
10. Laminar rust with negligible losses in top of bottom flanges and along the base of the web up to 4" high x 2' long.

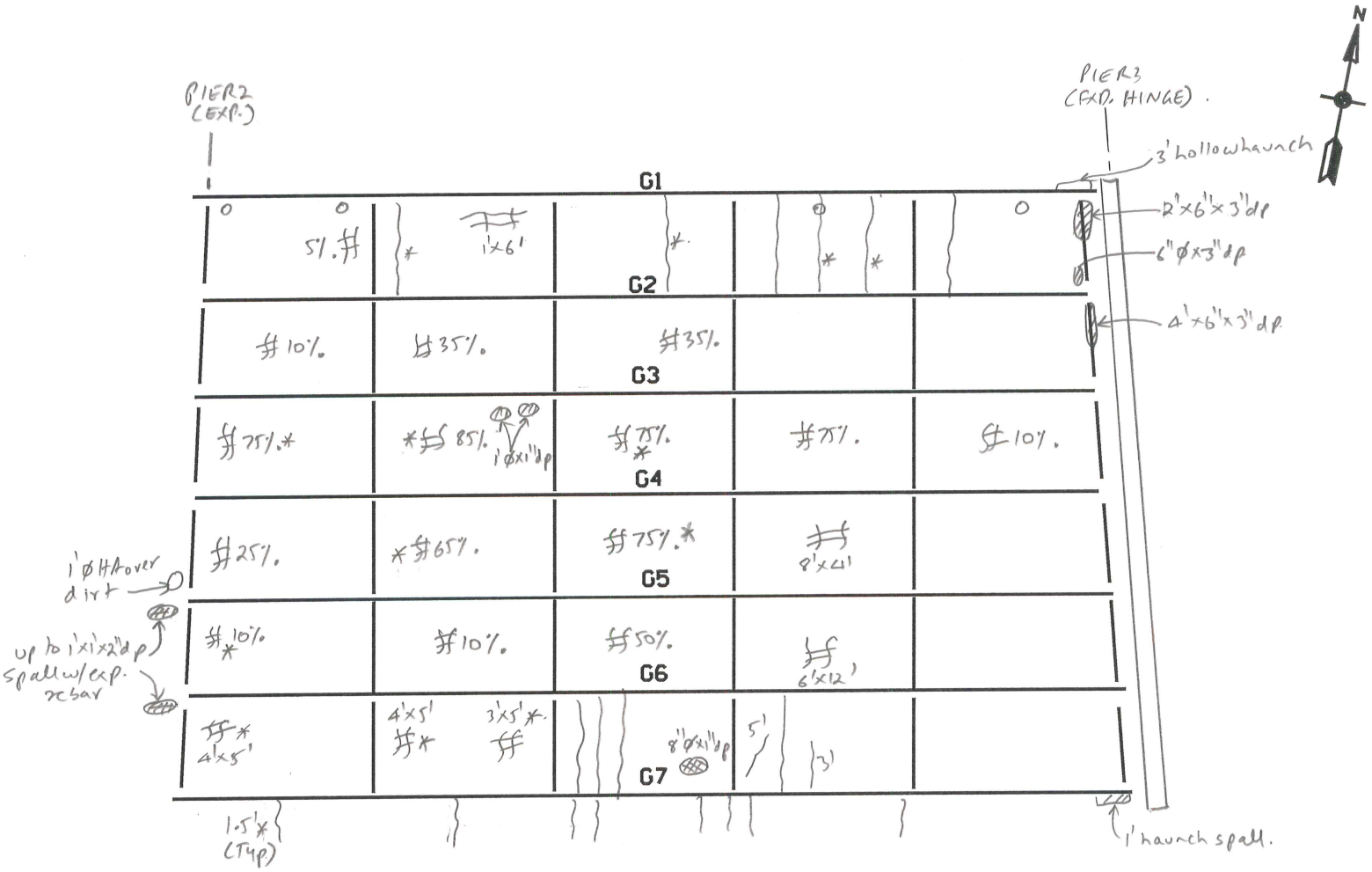

UNDERSIDE OF DECK - SPAN 3

(N.T.S.)

- See sheet 37 for notes.

LEGEND:

- HOLLOW AREA
- SHALLOW REBAR
- SPALL AREA
- SPALL AREA WITH EXPOSED REBAR
- MAPCRACKS
- HAIRLINE CRACKS
- EFFLORESCENCE IS PRESENT
- HONEYCOMB AREA
- SCALE AREA

O-PVC DECK WEEP PIPE

REVISION	DATE	CREW
REVISION 1	DATE	CREW
REVISION 2	DATE	CREW
REVISION 3	DATE	CREW

CMC ASSOCIATES

FIELD NOTES

JOB NO. 170-3224

DATE: 4/29/14

CREW: SRD, AKC, BJS, CAW

BRIDGE NO. 03311

SHEET 35 OF 80

GM2 ASSOCIATES	FIELD NOTES	JOB NO. 170-3224	BRIDGE NO. 03311
		DATE: 04/29/14	SHEET 36 OF 80
		CREW: SKD, AKC, BJS, CHW	

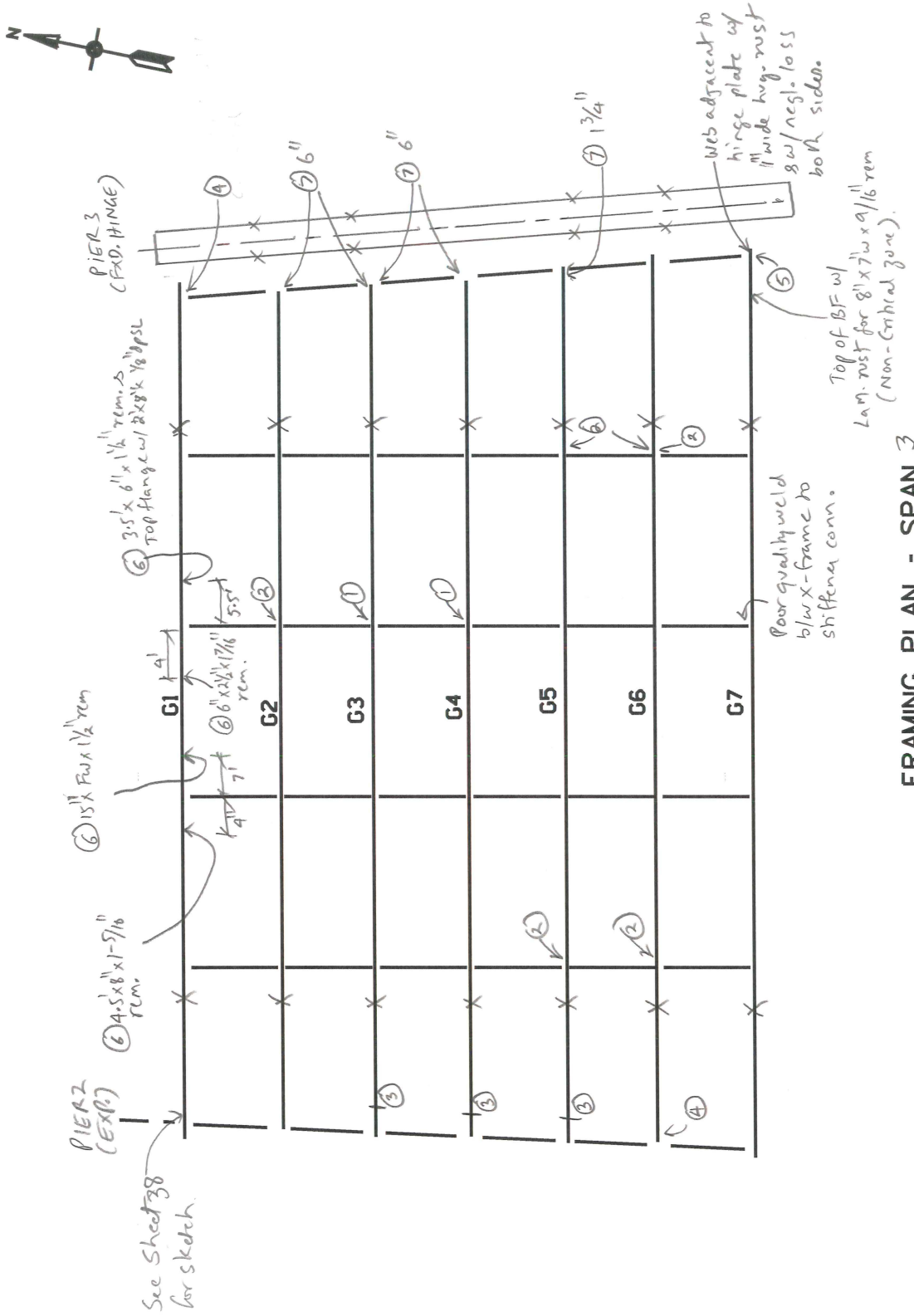

FRAMING PLAN - SPAN 3

(N.T.S.)

- See sheets 39-42 for sketches of Girders G1, G3, G4 & G5 at Pier 3.
- See sheet 37 for notes.

LEGEND:
⊥ BOTTOM FLANGE TRANSITION

REVISION 1	DATE	CREW	REVISION 3	DATE	CREW
REVISION 2	DATE	CREW	REVISION 4	DATE	CREW

GM2	**FIELD NOTES**	JOB NO. 170-3224	BRIDGE NO. 03311
		DATE: 04/29/2014	SHEET 37 of 80
		CREW: SRD, AKC, BJS, CAW	

GENERAL NOTES – SPAN 3:

- Girders exhibit areas of peeling paint with light rust covering less than 20% of steel surfaces.
- Random hollow are and spalls up to 1" deep in end haunches along Pier 3.

DETERIORATION NOTES (FRAMING):

1. Cross frame to stiffener welded connection cracked and retrofitted with bolts.
2. Previously noted cracked weld rewelded and spot painted.
3. Stitch welded stiffener on both sides of web.
4. Poor quality/cracked weld – 3" long (Cross frame lower angle to stiffener weld).
5. Laminar rust ± 1/2" x full height in web adjacent to the hanger plate (≤ 1/16" section loss).
6. Bottom flange with heavy rust and section loss – size noted.
7. Cross farme lower angle to siffener connection weld missing – size noted.

~~40/70~~

Baker	☒ FIELD ORIGINAL ☐ TRANSCRIBED BY: ___	STRUCTURE: 331	DATE: 5/19/11
		CREW: MJO, JAC	SHEET: ~~76/85~~ 38/80

DESCRIPTION:

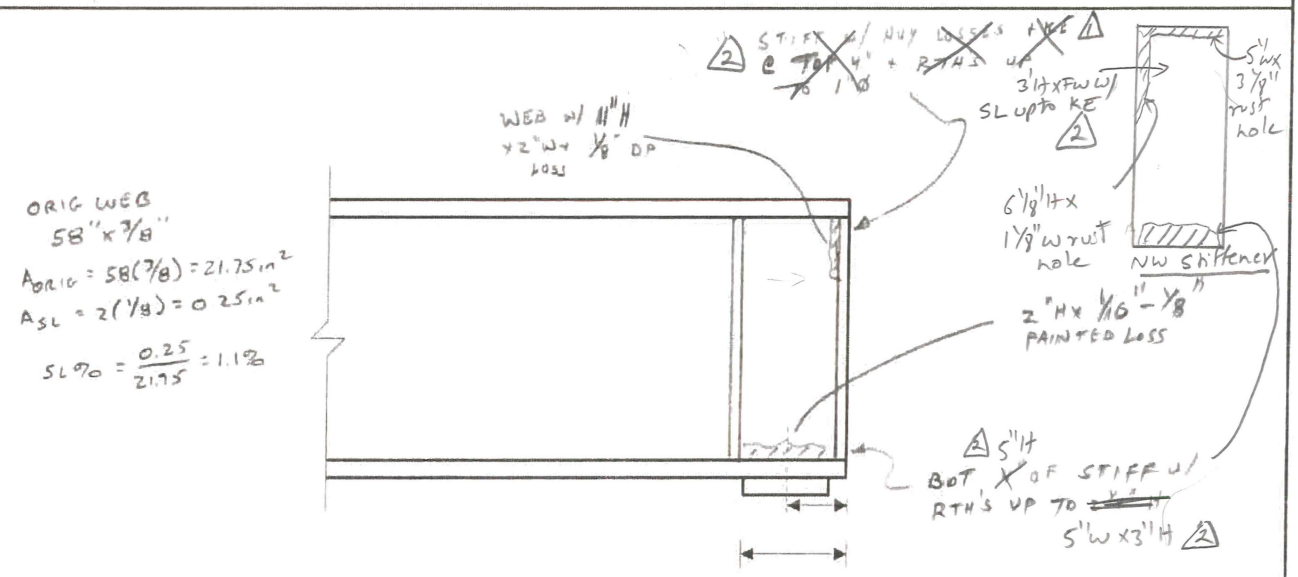

SP #3, G1 @ PIER 2, NORTH ELEV

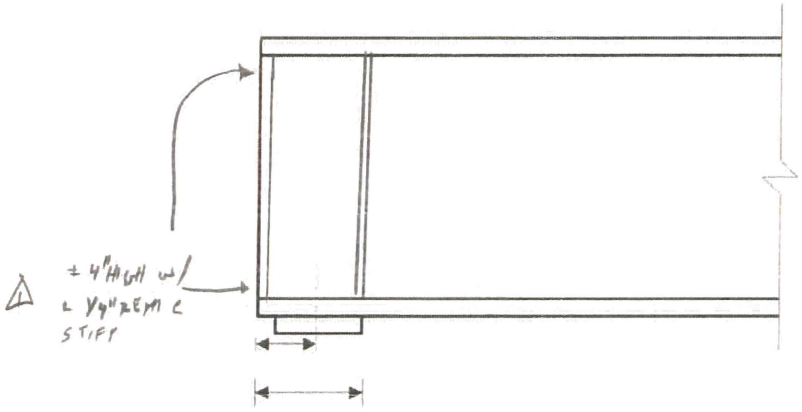

SP #3, GIRDER 1 @ PIER 2, S. ELEV

LEGEND

- HOLLOW AREA
- SHALLOW REBAR
- SPALL AREA
- SPALL AREA WITH EXPOSED REBAR
- MAP CRACKS (MpC) OR HAIRLINE MAP CRACKS (HLMpC)
- HAIRLINE CRACK (HLC) OR CRACKS (CRK)
- HONEY COMB AREA
- SCALE AREA (HVY, MED OR LT)
- x WITH EFFLORESCENCE

REV. NO:	DATE:	COMPANY:	CREW:
1	4/18/12	BKR	MJO, JT
2	6/7/14	GMZ	SRD, BJS

REV: JC - 02/17/09

Baker

SUPPLEMENTAL SHEET

☑ FIELD ORIGINAL ☐ TRANSCRIBED BY:_____

BRIDGE NO. 3311	DATE: 5/19/10
CREW: MJO, JAC	SHEET ~~19/25~~ 39/80

DESCRIPTION:

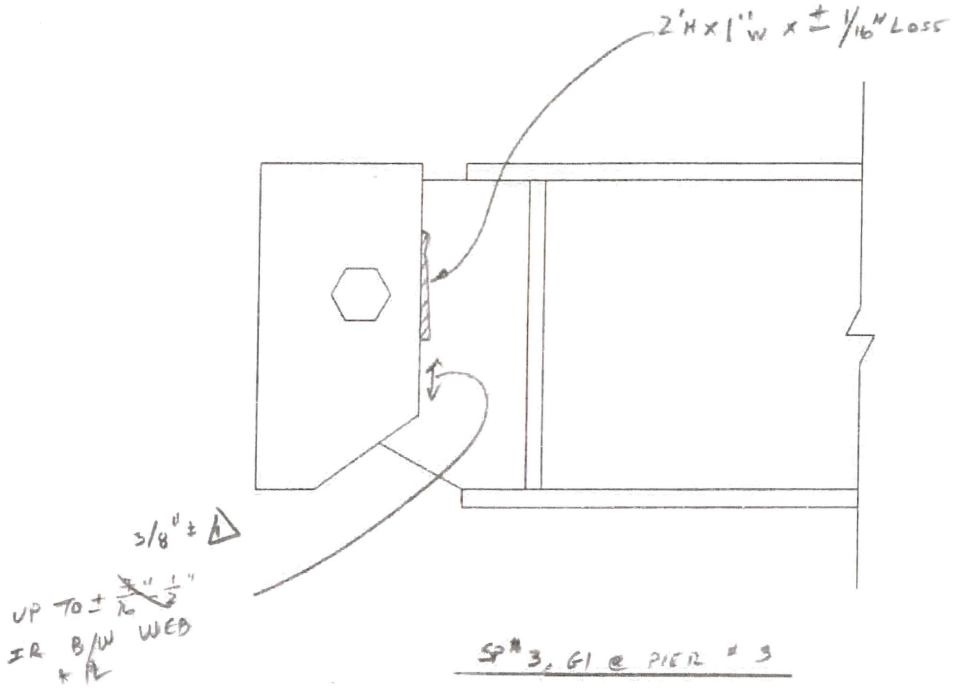

SP#3, G1 @ PIER #3

N. ELEVATION

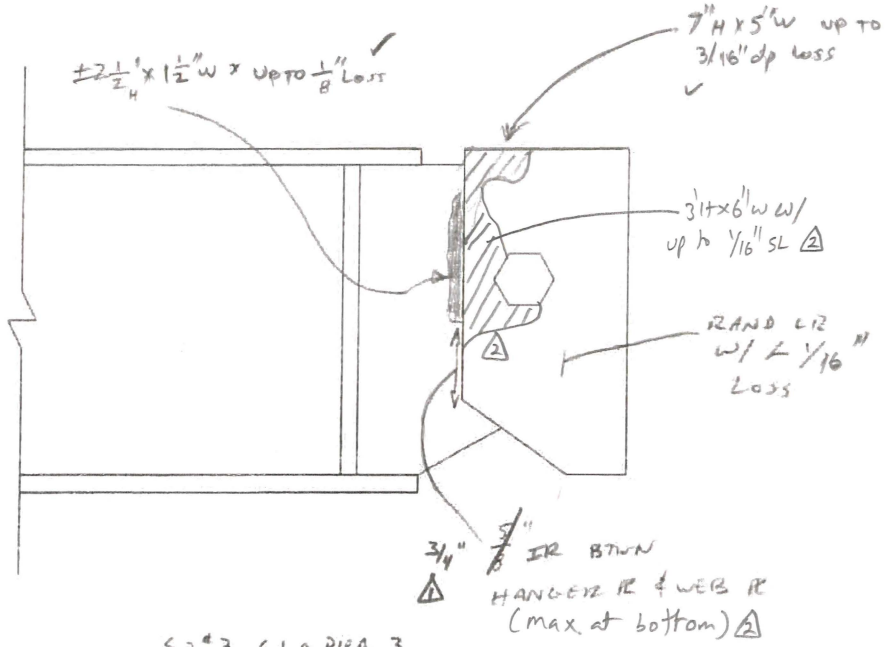

GIRDER WEB LOSS
- PER PLAN SHT A-6- GIRDER WEBS ARE 1 1/8" THICK

∴ WEBS = 58" x 1 1/8" = 65.25 in²

WEB LOSS = 24"(1/16") + 30"(1/8")

LOSS = 5.25 in²

∴ WEB LOSS = 8% ✓

SP#3, G1 @ PIER 3

S. ELEVATION

1 4/18/12 - MJO/PB

2 6/7/19 - SKO, BJS (GM2)

Baker

~~50/90~~

SUPPLEMENTAL SHEET

☒ FIELD ORIGINAL ☐ TRANSCRIBED BY:_____

BRIDGE NO. 3311	DATE: 5/19/16
CREW: MTO, JAC	SHEET ~~50/85~~ 40/80

DESCRIPTION: G3, SPAN 3, @ P3

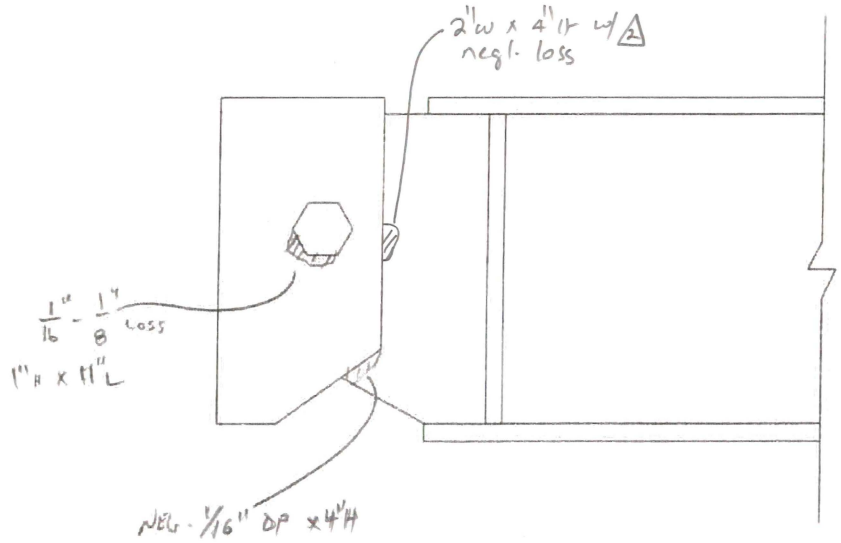

SP#3, G3 @ PIER 3

N. ELEVATION

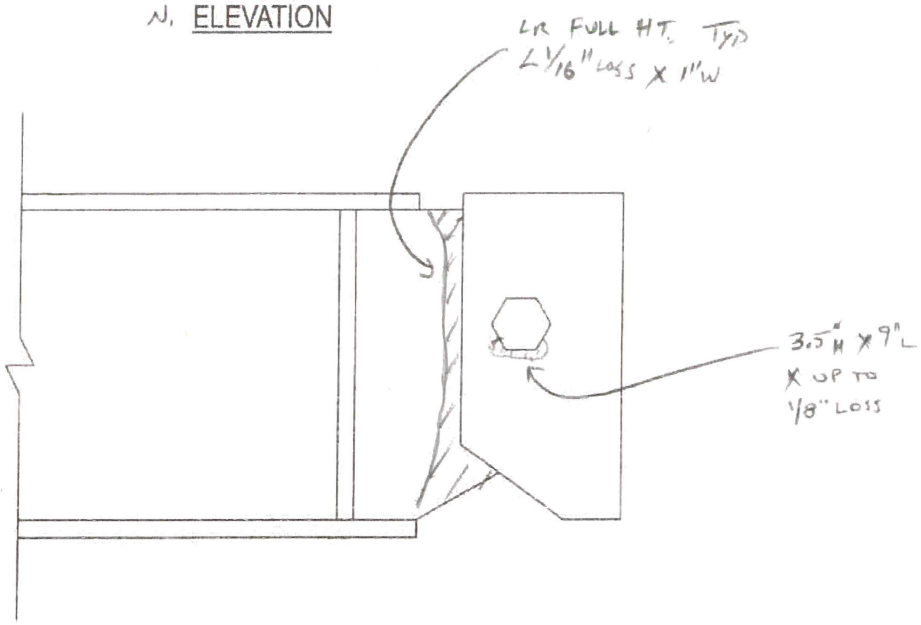

WEB LOSS
- ± 1 1/8" ORIG
- SAY 1/8" AVE LOSS
∴ WEB LOSS = 1/8 / 1.125"
WEB LOSS = ±11%

△1 4/18/12 - MTO/PB - NO CHANGE
△2 6/7/14 - SRD, BJS (GMZ)

SP#3, G3 @ PIER 3

S. ELEVATION

Baker

~~51/92~~

SUPPLEMENTAL SHEET

☒ FIELD ORIGINAL ☐ TRANSCRIBED BY:_____

BRIDGE NO. 3311	DATE: 5-19-10
CREW: MTO, JAS	SHEET ~~51/85~~ 41/80

DESCRIPTION:

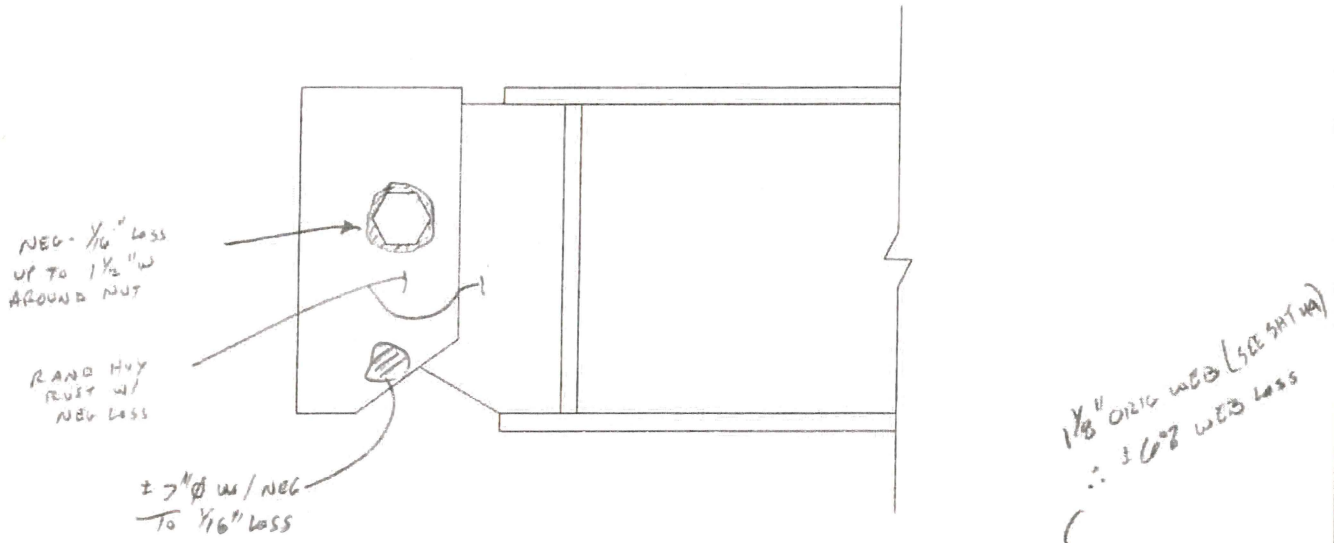

SP #3, G4 & PIER 3

N ELEVATION

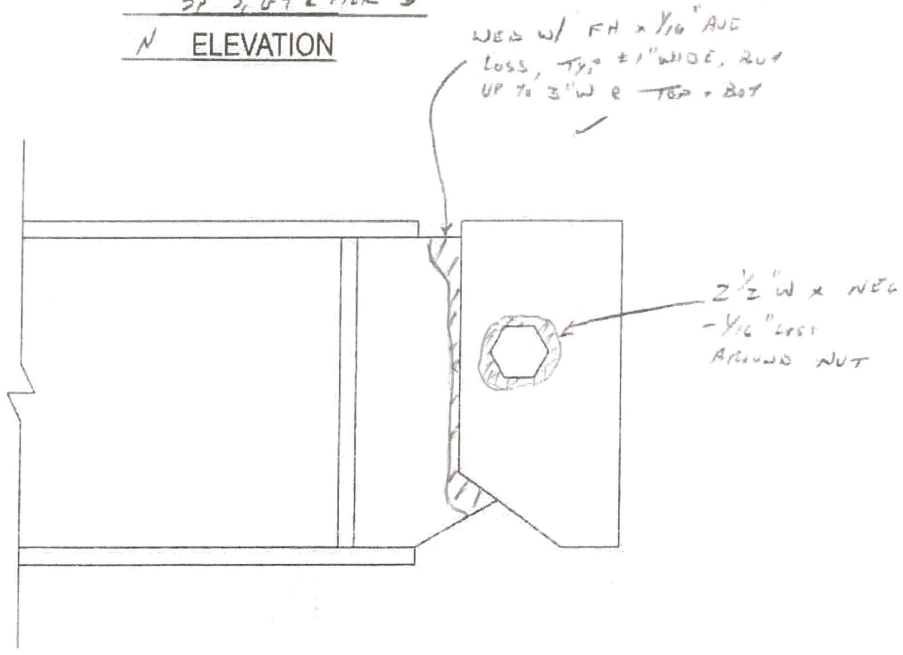

△1 4/18/12 - MTO/PB - NO CHANGE

△2 6/7/14 - SRD, BJS (GM2) - No change

SP #3, G4 @ PIER 3

S. ELEVATION

Baker

~~53/70~~

SUPPLEMENTAL SHEET	BRIDGE NO. 334	DATE: 5/10/10
☒ FIELD ORIGINAL ☐ TRANSCRIBED BY:_____	CREW: MTT, JAC	SHEET ~~52/85~~ 42/90

DESCRIPTION:

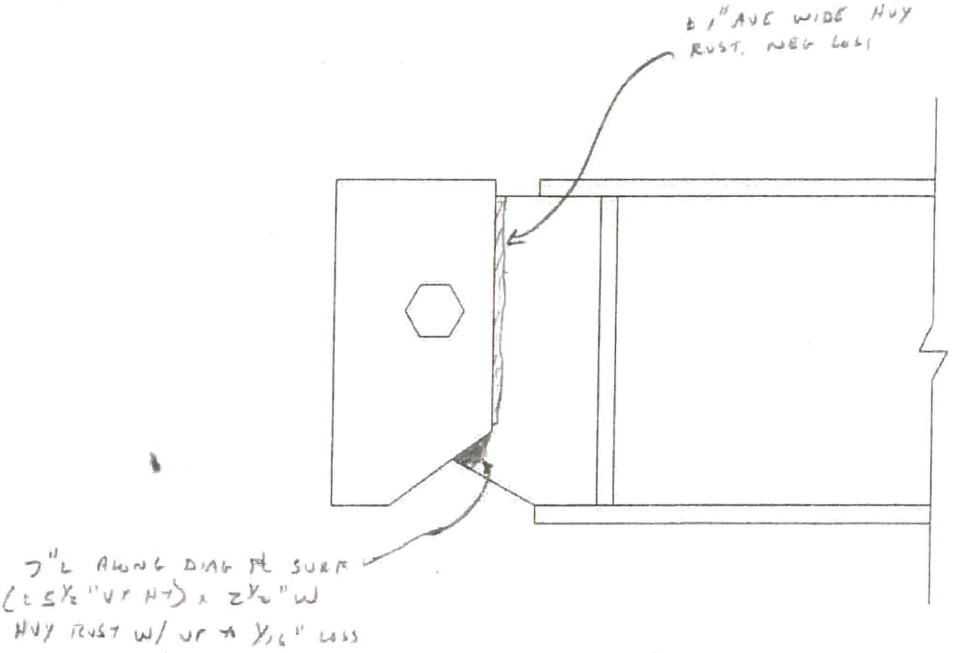

SP #3, GS @ PIER 3

N. ELEVATION

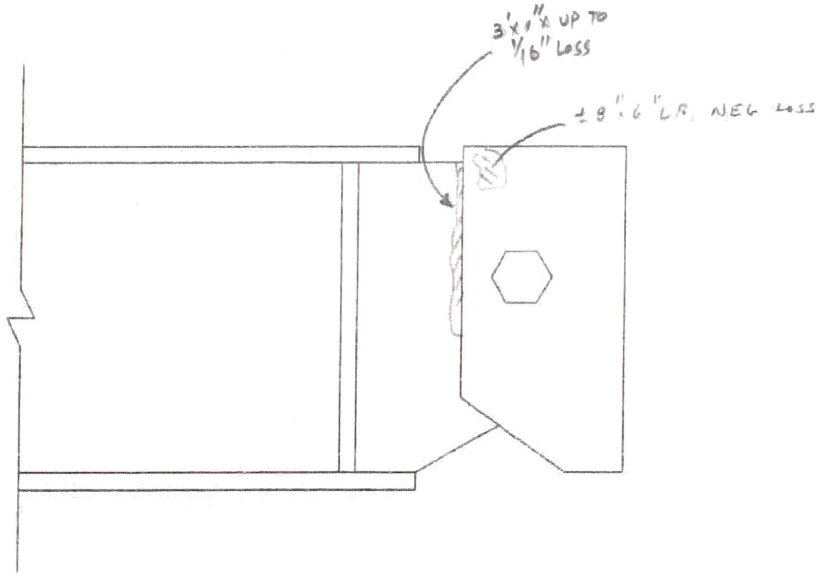

△1 4/18/12 - MJO/PB - NO CHANGE

△2 6/7/14 - SRD/BJS (GMZ) - No change

SP #3, GS @ PIER 3

S. ELEVATION

GM2 ASSOCIATES	FIELD NOTES	JOB NO.170-3224	BRIDGE NO. 03311
		DATE: 6/4/14	SHEET 43 OF 80
		CREW: SRD, AKC	

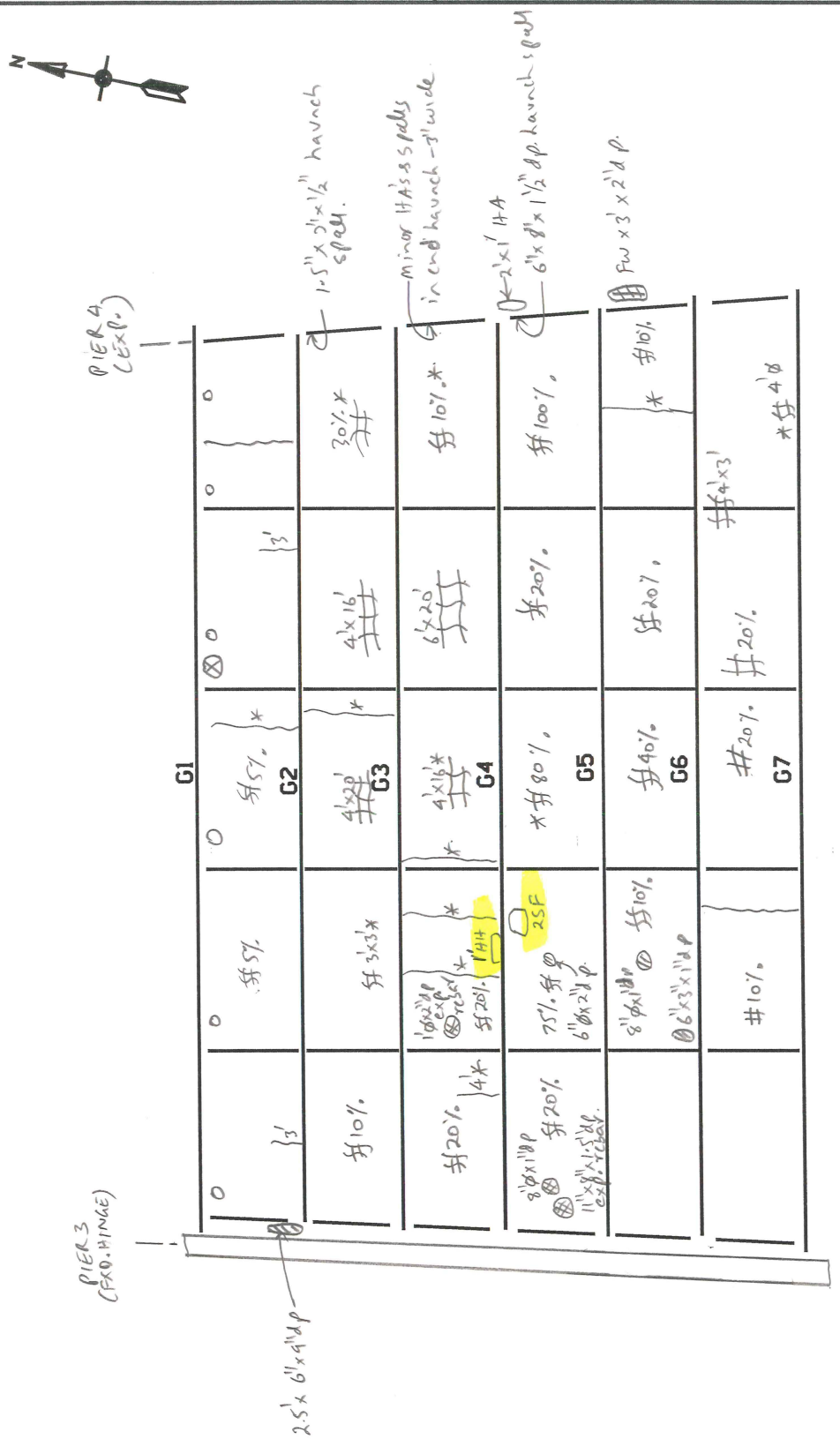

UNDERSIDE OF DECK - SPAN 4

(N.T.S.)

- See sheet 45 for notes.

LEGEND:
- HOLLOW AREA
- SHALLOW REBAR
- SPALL AREA
- SPALL AREA WITH EXPOSED REBAR
- MAPCRACKS
- HAIRLINE CRACKS
- EFFLORESCENCE IS PRESENT
- HONEYCOMB AREA
- SCALE AREA

O-PVC DECK WEEP PIPE

HHS HOLLOW HAUNCH

REVISION 1	DATE	CREW	REVISION 3	DATE	CREW
REVISION 2	DATE	CREW	REVISION 4	DATE	CREW

GM2 ASSOCIATES	FIELD NOTES	JOB NO.170-3224	BRIDGE NO. 03311
		DATE: 6/4/14	SHEET 44 OF 80
		CREW: SRD, AKC	

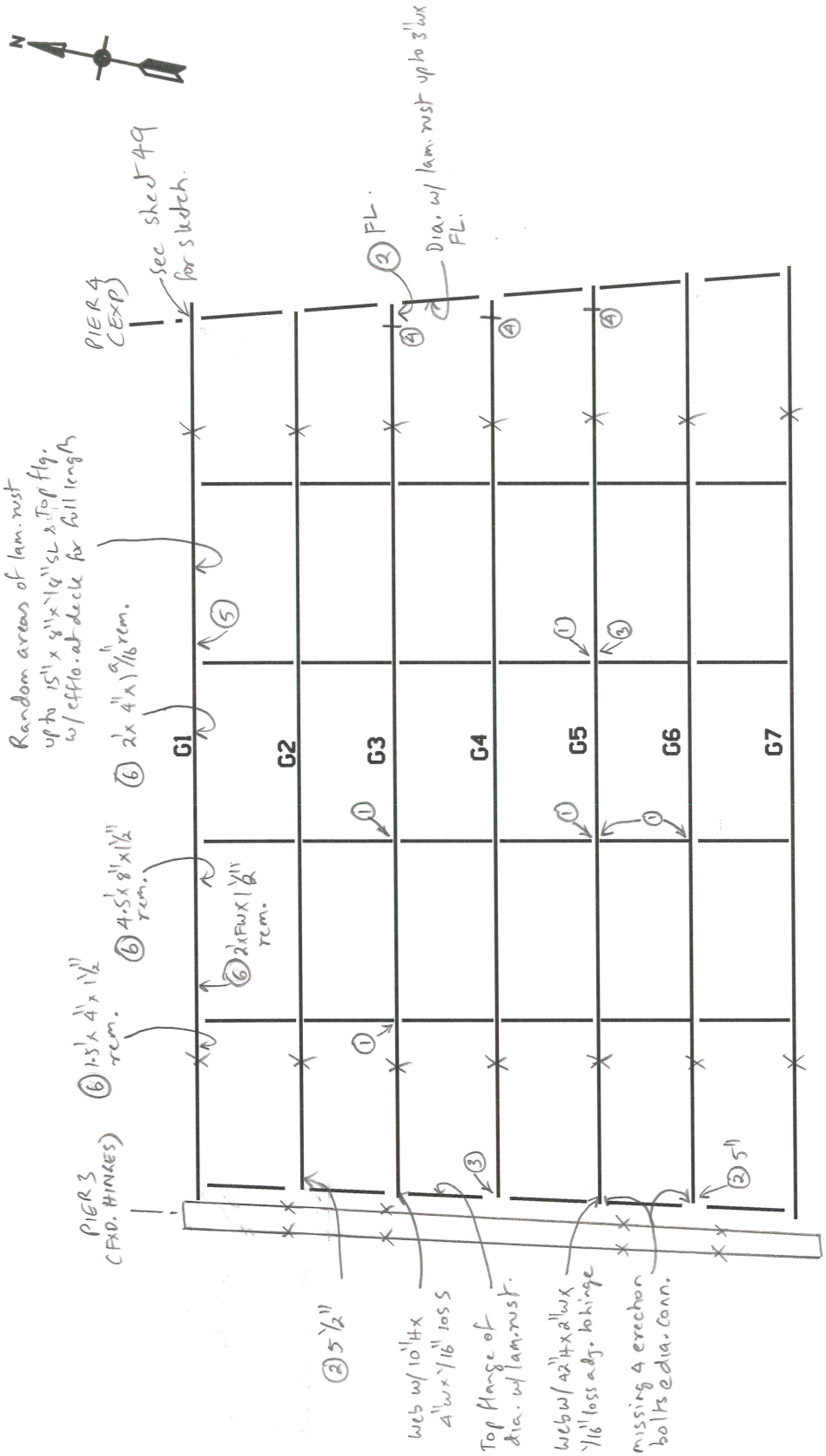

FRAMING PLAN - SPAN 4

(N.T.S.)

- See sheets 46-48 for sketches of girders G1, G2 & G4 at Pier 4 fixed hinges.
- See sheet 45 for notes.

LEGEND:
—*— BOTTOM FLANGE TRANSITION

REVISION 1	DATE	CREW	REVISION 3	DATE	CREW
REVISION 2	DATE	CREW	REVISION 4	DATE	CREW

	FIELD NOTES	JOB NO. 170-3224	BRIDGE NO. 03311
		DATE: 06/4/2014	SHEET 45 of 80
		CREW: SRD, AKC	

GENERAL NOTES – SPAN 4:

- Girders exhibit areas of peeling paint with light rust covering less than 15% of steel surfaces.
- Concrete patches in underside of deck at random locations.
- Areas of efflorescence at girder haunches at random locations and along concrete patch boundaries.

DETERIORATION NOTES (FRAMING):

1. Cross frame to stiffener welded connection cracked and retrofitted with bolts.
2. Cracked horizontal weld between cross frame lower angle to stiffener connection – Size noted.
3. Previously noted cracked weld between cross frame to stiffner rewelded and spot painted.
4. Stitch welded stiffener on both sides of web.
5. Heavy accumulation of bird debris.
6. Bottom flange with heavy rust and section loss – size noted.

Baker

~~SH/PC~~

SUPPLEMENTAL SHEET

☒ FIELD ORIGINAL ☐ TRANSCRIBED BY: ____

BRIDGE NO. 3311	DATE: 5/17/10
CREW: RL/MTB	SHEET ~~54~~ OF ~~85~~ 46/80

DESCRIPTION:

±3/16" Loss x 2"w Typ x FH (UP TO 4"w);

(RUST DIFFICULT TO REMOVE BUT REMOVED & (R) LOSINS THAT REVEALED 1/8" + 1/4" LOSS ∴ ±3/16" BGT AVE)

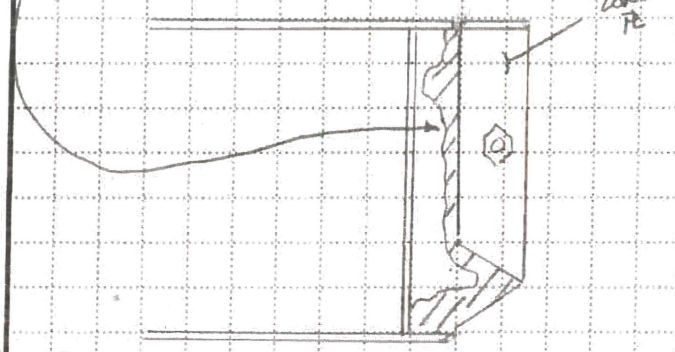

N. ELEV

±3'H
Web w/ 1/8" to 3/16" dp Loss @ad, PL up to Typ 1½"w bat FW @ top to 1'

UP TO ½" IR BWN RS △ @ BOTH ELEVATIONS

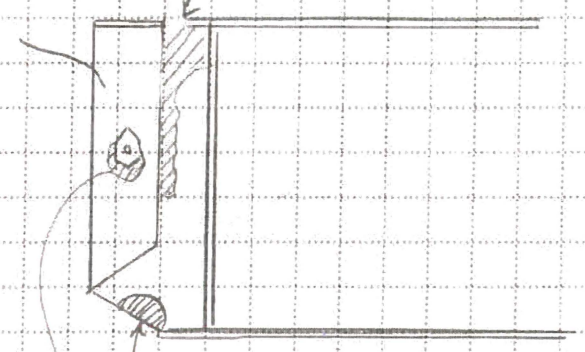

3"d x 1/8" - 3/16" dp SL △

LR around 3 sides of pin nut up to 2"w w/LR and 1/8" Loss ✓

SP #4, G1 @ PIER 3

WEB ORIG = 58" x 1/8" = 65.25 in² (~~SEE~~ SHT ~~44~~ 44 △)
Loss = 58"(3/16") + 36"(9/32") = 15.4 in²
Loss = ±25% ✓

UPDATE NO	DATE	COMPANY	CREW
△	4/16/12	BKK	JAC, MJO
△	6/6/14	GMZ	SRD, BJS
△			
△			

Baker

SUPPLEMENTAL SHEET

☑ FIELD ORIGINAL ☐ TRANSCRIBED BY: ____

BRIDGE NO. 3311	DATE: 5/17/10
CREW: MJC, RL	SHEET ~~[illegible]~~ OF ~~[illegible]~~

DESCRIPTION: 47/80

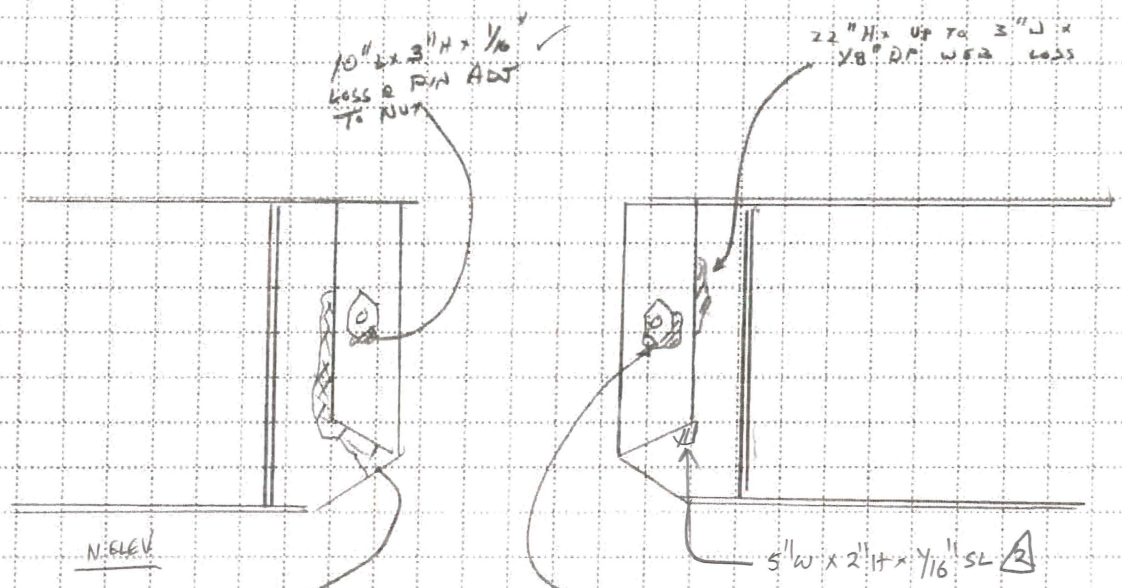

± 33" x 2" W x 1/16" + 1/8" WEB LOSS ✓

△1 IR UP TO 3/8" THICK BTWN WEB + CONN PL'S

SP & 4, G2 & P3

LOSS ADJ TO PIN NUT UP TO 1/8" DP x 1" W x 1'-6" (±)

△1 UP TO 3/16" AD LOSS FOR ADJ 1 1/2" ON 2 SIDES OF NUT

WEB ORIG = 65.25 in² (SEE SHT △44)

LOSS = (33" x 3/32") + 22" (1/8") ~~= 5.8 in²~~ + 2' x 1/16" = 5.9 in² △2

WEB LOSS = 9% ✓

UPDATE NO.	DATE	COMPANY	CREW
△1	4/18/12	BAKER	MJC, MJO
△2	6/6/14	GMZ	SRD, BJS
△			
△			

Baker

~~56/80~~

SUPPLEMENTAL SHEET

☒ FIELD ORIGINAL ☐ TRANSCRIBED BY:_____

BRIDGE NO. 3311	DATE: 5/19/10
CREW: YS, MJB, JAC	SHEET ~~56/85~~ 48/80

DESCRIPTION:

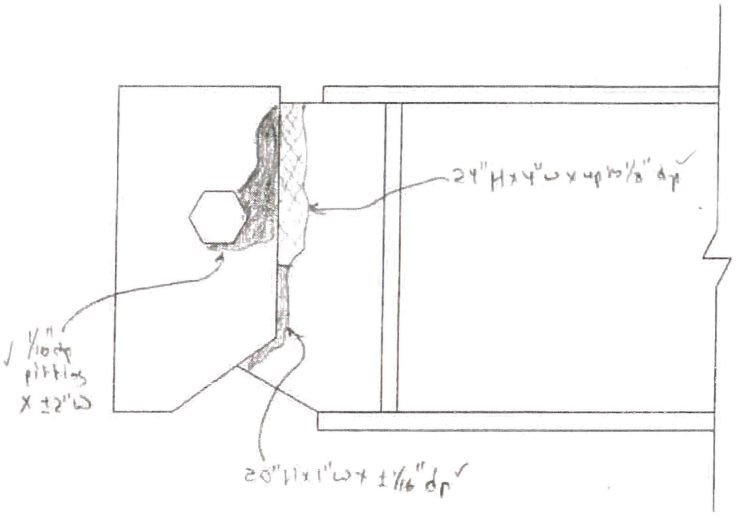

SPAN 4, GIRDER 4 @ PIER 3

S. ELEVATION

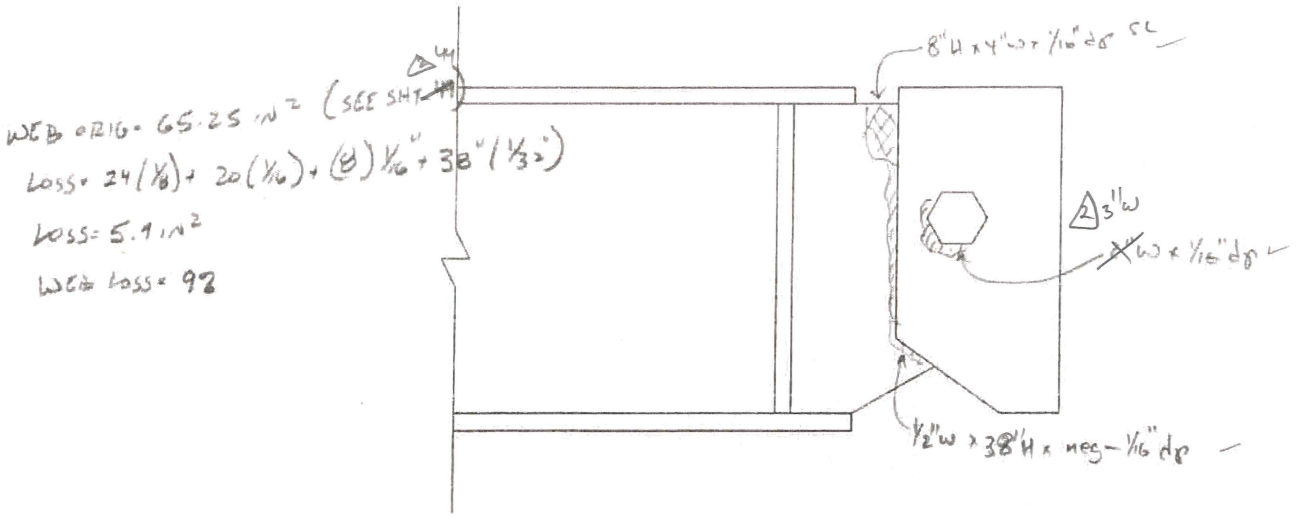

SPAN 4, GIRDER 4 @ PIER 3

N. ELEVATION

△1 4/10/12 – JAC, PB, MJD, — NO CHANGE
△2 6/6/14 – SRD, BJS (GMZ)

GM2 ASSOCIATES	FIELD NOTES	JOB NO.170- 3224	BRIDGE NO. 03311
		DATE: 06/04/14	SHEET 49 OF 80
		CREW: SRD, AKC	

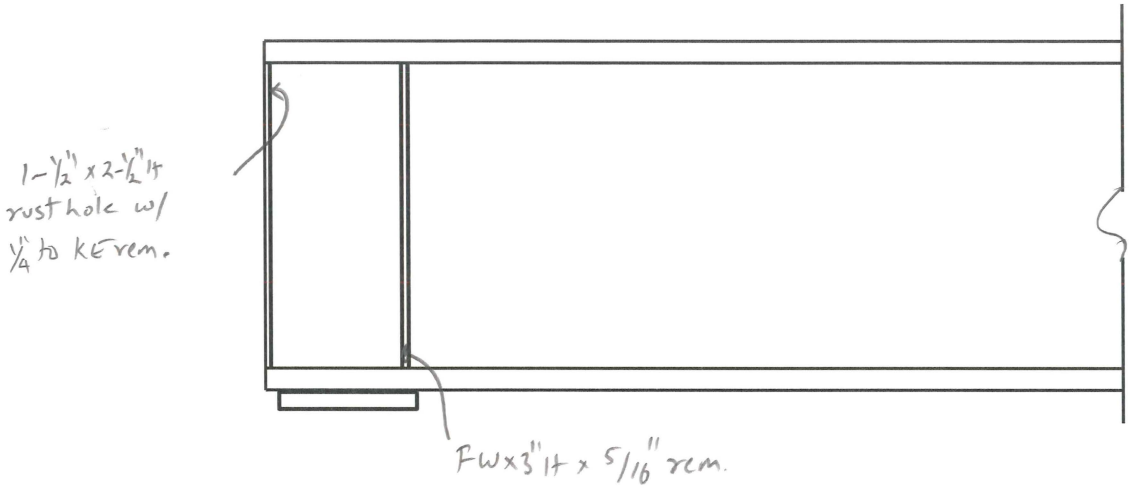

N. ELEVATION OF GIRDER G1 AT PIER 4 IN SPAN 4

REVISION 1	DATE	CREW	REVISION 3	DATE	CREW
REVISION 2	DATE	CREW	REVISION 4	DATE	CREW

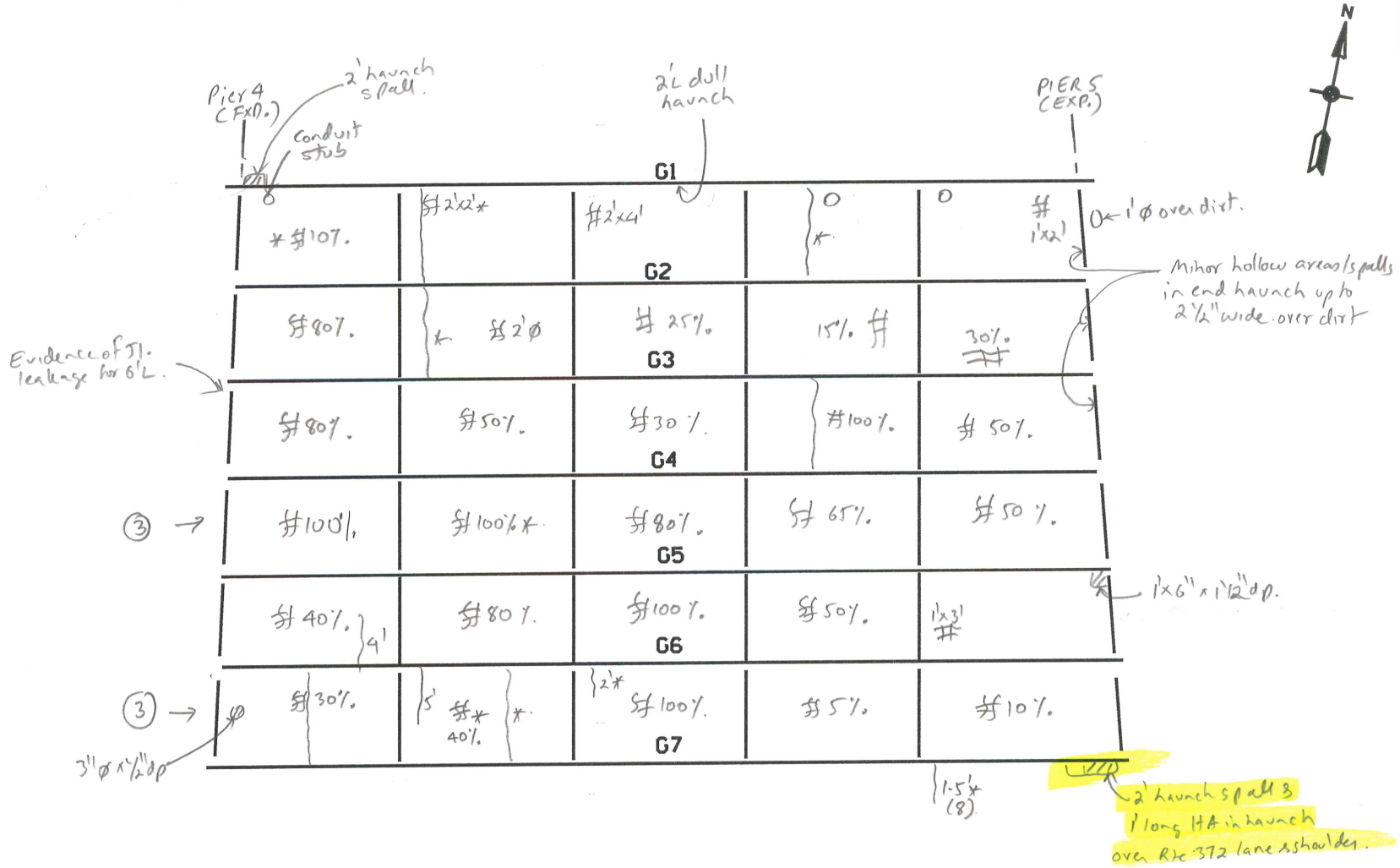

UNDERSIDE OF DECK - SPAN 5

(N.T.S.)

LEGEND:

- HOLLOW AREA
- SHALLOW REBAR
- SPALL AREA
- SPALL AREA WITH EXPOSED REBAR
- MAPCRACKS
- HAIRLINE CRACKS
- EFFLORESCENCE IS PRESENT
- HONEYCOMB AREA
- SCALE AREA

O - PVC DECK WEEP PIPE

- See Sheet 52 for notes.

REVISION | DATE | CREW

REVISION | DATE | CREW

REVISION | DATE | CREW

REVISION | DATE | CREW

GMB ASSOCIATES

FIELD NOTES

JOB NO. 170-3224

DATE: 06/04/14

CREW: SRD, AKC

BRIDGE NO. 03311

SHEET 50 OF 80

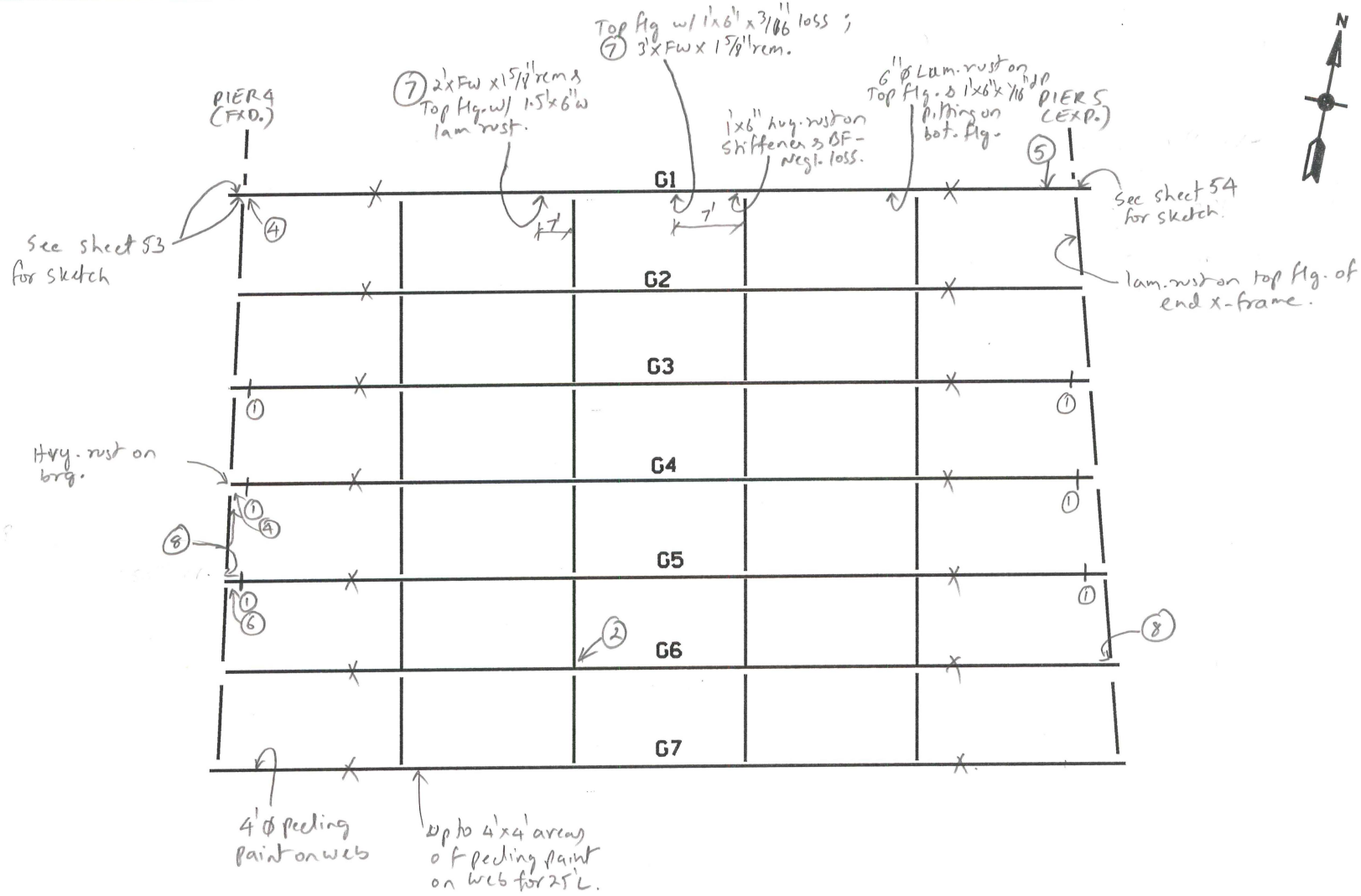

FRAMING PLAN - SPAN 5

(N.T.S.)

- See sheet 52 for notes.

LEGEND:

—✱— BOTTOM FLANGE TRANSITION

REVISION	DATE	CREW
REVISION	DATE	CREW
REVISION	DATE	CREW
REVISION	DATE	CREW

GM2 ASSOCIATES

FIELD NOTES

JOB NO. 170-3224

DATE: 6/4/14

CREW: SKD, AKC

BRIDGE NO. 03311

SHEET 51 OF 80

	FIELD NOTES	JOB NO. 170-3224	BRIDGE NO. 03311
		DATE: 06/4/2014	SHEET 52 of 80
		CREW: SRD, AKC	

GENERAL NOTES – SPAN 5:

- Girders exhibit areas of peeling paint with light rust covering less than 15% of steel surfaces.
- Fixed bearings at Pier 4 exhibit varying degrees of rust. See framing plan sheet also.

DETERIORATION NOTES (FRAMING):

1. Stitch welded stiffener on both sides of web.
2. Abrasion rust between base of stiffener and top of bottom flange with noise at random locations.
3. Underside of joint with longitudinal cracks up to 1/16" wide with rust stains.
4. Cracked bottom horizontal weld up to 4" long between the end cross frame lower angle to stiffener connection.
5. North leg of bottom flange with laminar rust for 7' long with average 5/8" remaining starting at 3' from the face of the bearing. Bottom of stiffeners with heavy laminar rust and with 100% section loss at bottom 3/4". The 2nd stiffener has a 3-1/2" wide x 1" high rust hole.
6. Bearing with light accumulation of debris.
7. Bottom flange with heavy rust and section loss – size noted.
8. Poor quality bottom horizontal weld between the end cross frame lower angle to stiffener connection.

Baker	☒ FIELD ORIGINAL ☐ TRANSCRIBED BY:_____	BRIDGE NO. 334	DATE: 4/12/12
		CREW: MJD, JAC	SHEET ~~50/80~~ 53/80

DESCRIPTION:

L_{BS} = 13"

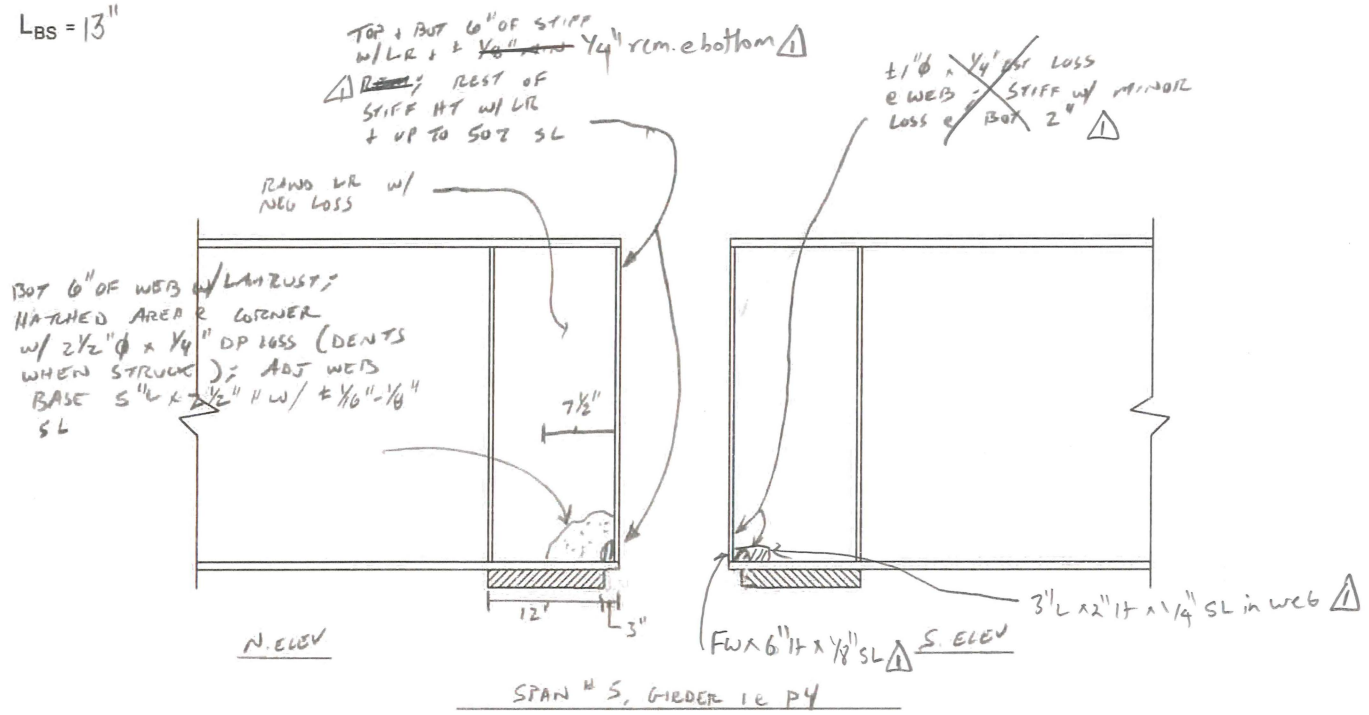

SPAN # 5, GIRDER 1 & P4

* NOTE - WEB IS ONLY 3/8" ∴
2 1/2" ϕ PAPER THIN SINCE 1/4" LOSS EACH SIDE TOTALS MORE THAN 3/8"

UPDATE NO.	DATE	COMPANY	CREW
△1	6/4/14	GMZ	SRD, AKC
△			
△			
△			

L_{BS} = Length of web from first to last bearing stiffener

GM2 ASSOCIATES	FIELD NOTES	JOB NO. 170-3224	BRIDGE NO. 03311
		DATE: 06/04/14	SHEET 54 OF 80
		CREW: SRD, AKC	

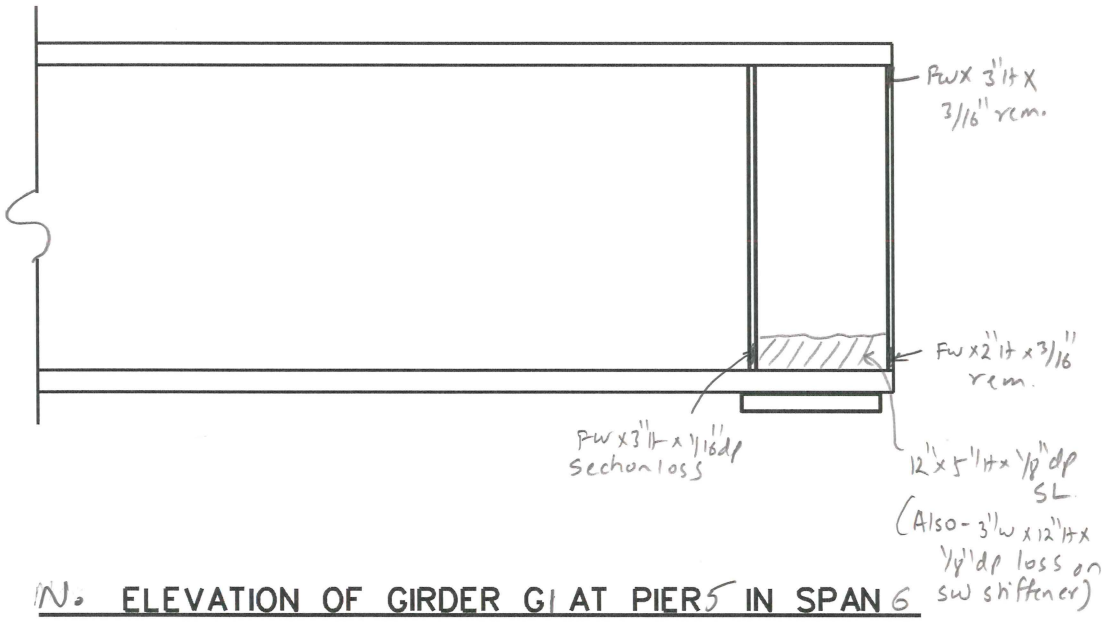

No. ELEVATION OF GIRDER G1 AT PIER 5 IN SPAN 6

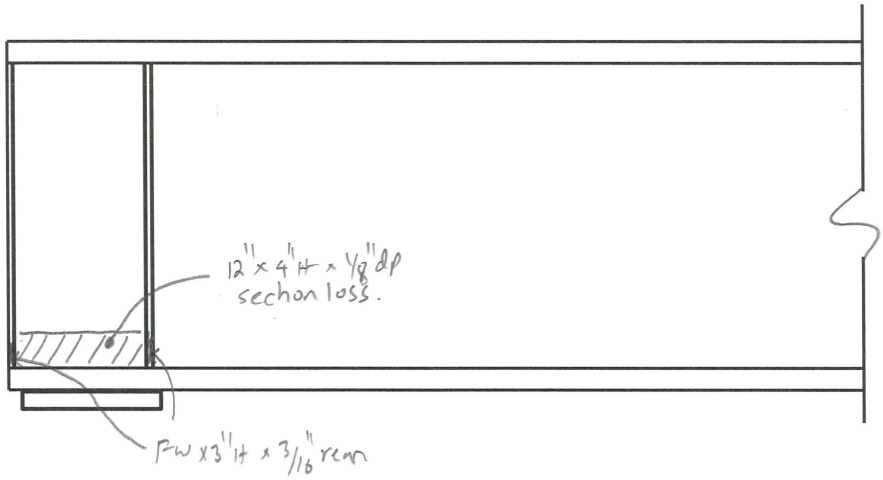

No. ELEVATION OF GIRDER G1 AT PIER 5 IN SPAN 5

REVISION 1	DATE	CREW	REVISION 3	DATE	CREW
REVISION 2	DATE	CREW	REVISION 4	DATE	CREW

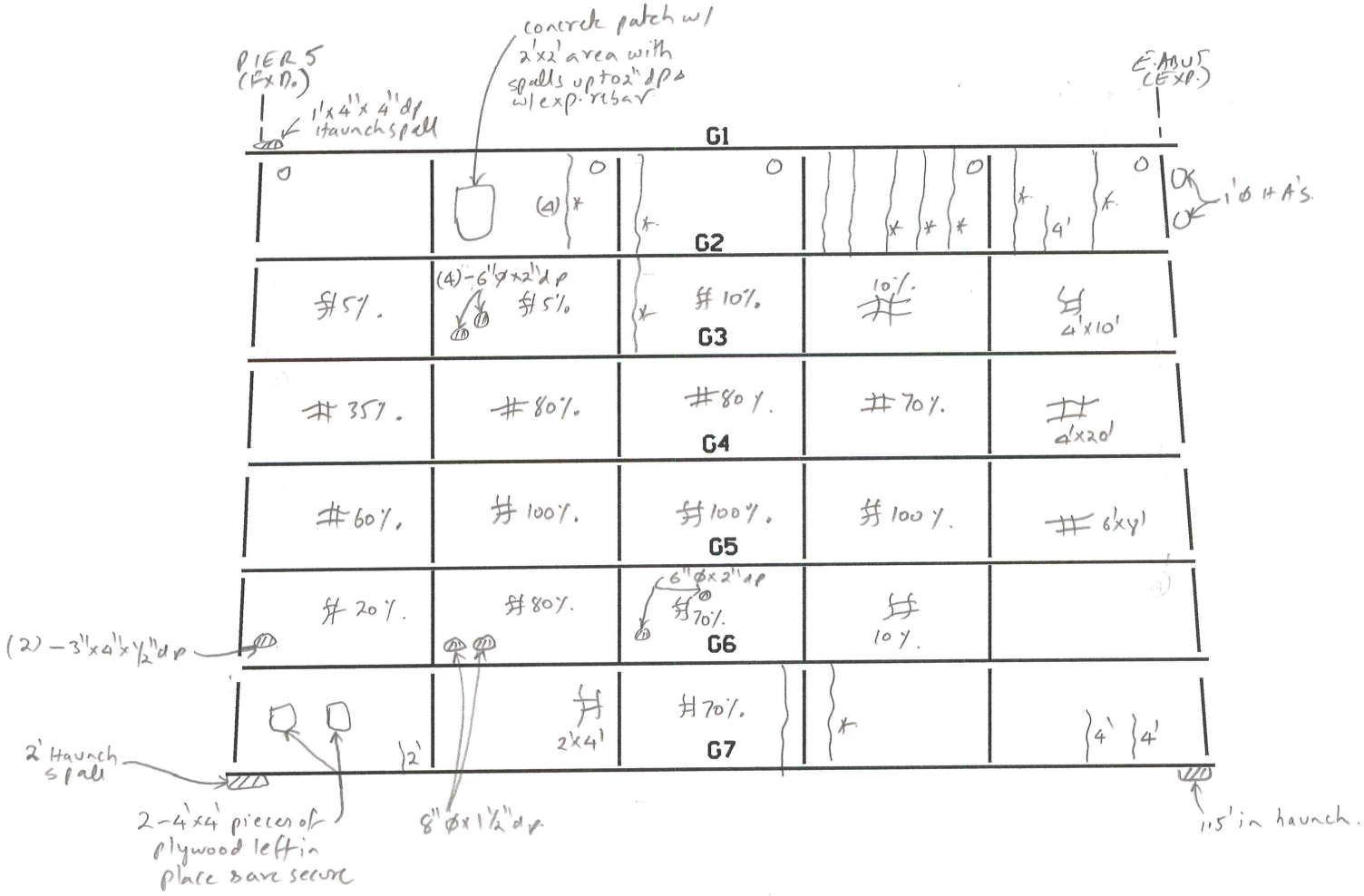

UNDERSIDE OF DECK - SPAN 6

(N.T.S.)

- See sheet 57 for notes.

LEGEND:

- HOLLOW AREA
- SHALLOW REBAR
- SPALL AREA
- SPALL AREA WITH EXPOSED REBAR
- MAPCRACKS
- HAIRLINE CRACKS
- EFFLORESCENCE IS PRESENT
- HONEYCOMB AREA
- SCALE AREA

O - PVC DECK WEEP PIPE

REVISION	DATE	CREW
REVISION 1	DATE	CREW
REVISION 2	DATE	CREW
REVISION 3	DATE	CREW

GMA ASSOCIATES

FIELD NOTES

JOB NO. 170-3224

DATE: 04/22/14

CREW: SKD, BTS

BRIDGE NO. 0331J

SHEET 55 OF 80

GM2 ASSOCIATES	FIELD NOTES	JOB NO. 170-3224	BRIDGE NO. 03311
		DATE: 4/22/14	SHEET 56 OF 90
		CREW: SRD, BJS	

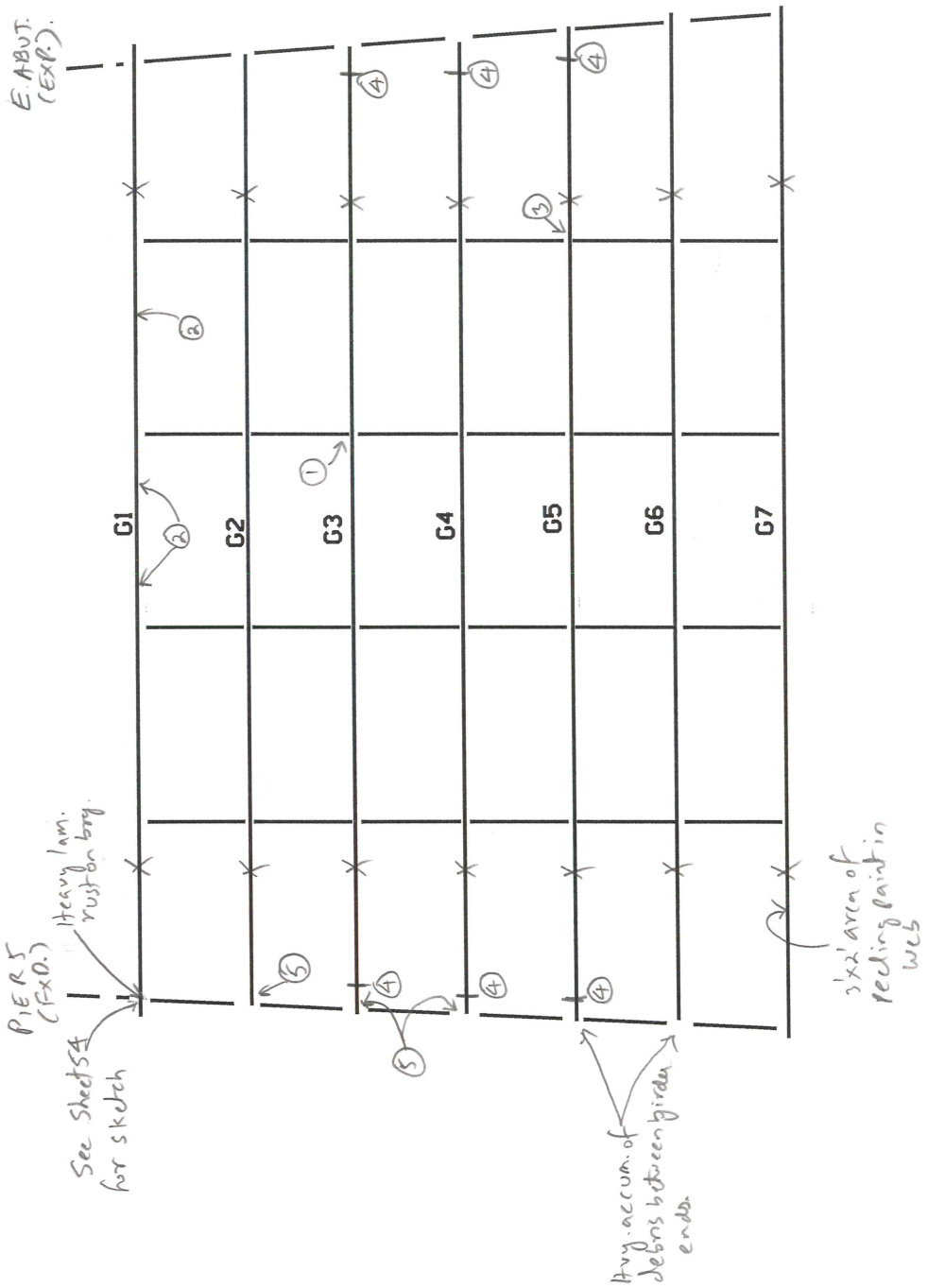

FRAMING PLAN - SPAN 6

(N.T.S.)

- See sheet 57 for notes.

LEGEND:

—*— BOTTOM FLANGE TRANSITION

REVISION 1	DATE	CREW	REVISION 3	DATE	CREW
REVISION 2	DATE	CREW	REVISION 4	DATE	CREW

GENERAL NOTES – SPAN 6:

- Girders exhibit areas of peeling paint with light rust covering less than 10% of steel surfaces.
- Fixed bearings at Pier 5 exhibit light to moderate rust and heavy accumulation of debris around. See framing plan sheet also.
- Concrete patches on underside of deck at random locations.

DETERIORATION NOTES (FRAMING):

1. Cross frame to stiffener welded connection cracked and retrofitted with bolts. Cracks on all three edges of cross frame lower angle to stiffener connection with abrasion rust.
2. Evidence of deck leakage with efflorescence. Moderate to heavy laminar rust along top flange – 2' long x 8" wide with minor section loss; Bottom flange south leg with 1-9/16" to 1-5/8" average remaining.
3. Poor quality bottom horizontal weld between the cross frame lower angle to stiffener connection (no fusion for 4" long).
4. Stitch welded stiffener on both sides of web.
5. Poor quality horizontal weld between the end cross frame lower angle to stiffener connection.

Baker

S.O. No.

Subject: BR # 3311 - SECTION LOSSES

Sheet No. of

Drawing No.

Computed by MJO Checked By WMK Date MAY 2012

△1 SRD, BJS, AKC (GMZ) 4/22/14

GENERAL

- BF LOSSES ≥ 5% IN CRIT ZONES SHOWN (< 5% LOSS NOT SHOWN); LOSSES IN NON CRIT ZONES IGNORED
- WEB LOSSES IN SHEAR SHOWN IF ≥ 10%; WEB LOSS IN BRG SHOWN IF ≥ 25%
- END STIFF'S - 6" x 1/2"; t-t BRG STIFF = 13"±; WEBS ARE 58", 3/8"

∴ WEB AREA FOR SHEAR = 21.8 in²

∴ WEB AREA FOR BRG = [1(9)(tw) + LBS] tw + ABS = [1(9)(3/8") + 13"] 3/8" + 4(6")(1/2") = 18.1 in²

AFFECTED WEB = 16.4"

SP#1

- LOSSES DO NOT MEET THRESHOLDS ABOVE FOR SL CALC

SP#2

- GIRDER 1 BF
  - PANEL #3 → 1 1/2" AVE REM @ S. LEG → GIRD P1-1 @ PLANS → BF = 18" x 1 11/16" ORIG
    - 3/16" LOSS @ LEG = 3/32" AVE LOSS x FW → (3/32") / 1 11/16 = 6% BF LOSS @ MIDSPAN ✓
- GIRDER 1 WEB @ PIER 1
  - WEB/STIFFS IN BRG - [6"(1/16") + 11.5"(1/4") + 1/2"(3/8")] WEB + [6"(1/8") + (±5" x 1/2)] STIFFS = 6.7 in²/18.1 in² = 37% LOSS IN BRG (<10% SHEAR LOSS)

SP#3

- GIRDER 1 BF (GIRDER P2-1 @ PLANS) → BF = 18" x 1 11/16" @ CENTER PORTION = 30.375 in² △1
  - PANEL 2 → 9" ~~1/2~~ W x ~~1 3/8"~~ 5/16" △1 REM → LOSS = 9" ~~1/2~~ (~~5/16~~) 3/8" ~~1 3/8 in²~~ 3 in² / (18" x 1 11/16") = ~~6%~~ 9.8% BF LOSS
  - PANEL 3 → S. LEG w/ 1 1/2" AVE REM @ 3/16" LOSS = 3/32" AVE LOSS / 1 11/16 = 6% BF LOSS ✓
- GIRDER 1 @ PIER 2
  - WEB/STIFF LOSS → (±12" x 3/32") WEB + [6"(1/2") + 6"(1/4")] STIFF = 5.6 in²/18.1 in² = 31% LOSS IN BRG ✓ (<10% SHEAR LOSS)
- GIRDER 3 @ PIER 3
  - 11% WEB LOSS IN SHEAR (SEE ELEV SKETCH FOR CALC)

S.O. No.

Subject: BR # 3311 SECTION LOSSES (CONT'D)

Sheet No. of

Drawing No.

Computed by MJ Checked By WMK Date MAY 2012

Baker

SP #4

- GIRDER 1 BF PANEL 2 (GIRD P3-1 @ PLANS) – 18" x 1 11/16" ORIG) → 1 1/2" MIN REM
  - LOSS = 8"(3/16") = 1.5 IN² / (18" x 1 11/16") = 5% BF LOSS

- GIRDER 1 WEB @ P3
  - 25% LOSS IN SHEAR (SEE ELEV SKETCH FOR CALC)

SPAN #5

- GIRDER 1 TF, PANEL 3 (GIRD P4-1) → 16" x 15/16" ORIG
  - LOSS = 6" x 3/16" = 1.1 IN² / (16" x 15/16") = 8% TF LOSS @ MIDSPAN

- GIRDER 1 WEB @ PIER 4
  - L 25% WEB LOSS IN BRG., L 10% SHEAR

1 - G1 web @ Pier 5

- web bearing loss = 12" x 1/8" + (6" x 5/16") 2 = 5.25 in² % loss = 5.25 / 18.1 = 29% loss.

SPAN 6

- ~~LOSSES DO NOT MEET THRESHOLDS FOR CALCS, AS STATED @ TOP OF PREV SHT~~ 1

- G1 web @ Pier 5

- web bearing loss = 12" x 1/8" + 6" x 1/16" + 6" x 5/16" + 6" x 1/8" = 4.5

  % loss = 4.5 / 18.1 = 24% loss.

GM2	FIELD NOTES	JOB NO. 170-3224	BRIDGE NO. 03311
		DATE: 7/9/14	SHEET 60 OF 80
		CREW: SRD, AKC, BJS	

CROSS FRAME WELD CRACK SCHEDULE

Span	Girder	Cross Frame No.	Cracked/Broken/Missing Weld at Cross Frame	Other Comments
1	1	3	Yes	
1	2	3, 4	Yes	Total 3 welds deteriorated at these two cross frames.
1	3	4	Yes	
1	4	4	Yes	
1	5	3	Yes	
1	6	2, 3	Yes	
1	7	4	Yes	2" of 5" weld is missing & rest is crcaked/broken.
2	1	Pier 2 Cross Frame	Yes	
2	2	3	Yes	
2	2	Pier 2 Cross Frame	Yes	2 Welds missing
2	3	1	Yes	1" cracked weld.
2	4	3, 4	Yes	
2	5	3, 4	Yes	
2	6	3	Yes	
2	7	Pier 1 Cross Frame	Yes	
2	Bay 2	Pier 2 Cross Frame	Yes	Cross frame diagonal angle with missng welds
3	1	Pier 3 Cross Frame	Yes	
3	2	Pier 3 Cross Frame	Yes	
3	3	Pier 3 Cross Frame	Yes	On both sides.
3	4	Pier 3 Cross Frame	Yes	
3	5	Pier 3 Cross Frame	Yes	
3	6	Pier 2 Cross Frame	Yes	
4	2	Pier 3 Cross Frame	Yes	
4	3	Pier 4 Cross Frame	Yes	
4	6	Pier 3 Cross Frame	Yes	
5	1	Pier 4 Cross Frame	Yes	
5	4	Pier 4 Cross Frame	Yes	
6	5	4	Yes	

Above cracks are typically located at lower angle of the cross frame to siffener connection.
Erection bolts are in place. There is typically one weld per location, unless noted in the comments above.

REVISION 1	DATE	CREW	REVISION 3	DATE	CREW
REVISION 2	DATE	CREW	REVISION 4	DATE	CREW

61/90

Bridge No.: 03311 Date: 4/22/14 Prepared By: SRD Checked By: AKC

CONCRETE DETERIORATION WORKSHEET

Form BRI - 10, 9/01

	Deterioration By Span - In Square Feet										
	Span Number										
Deterioration Type	1	2	3	4	5	6					Total
Spalled and Delaminated Areas	Top: 0	Top: 0	Top: 0	Top: 0	Top: 0	Top: 0					Top: 0
	Bot: 5	Bot: 4	Bot: 11	Bot: 29	Bot: 5	Bot: 11					Bot: 65
Scale (Moderated to Severe Only)	Top: 0	Top: 0	Top: 0	Top: 0	Top: 0	Top: 0					Top: 0
	Bot: 0	Bot: 0	Bot: 0	Bot: 0	Bot: 0	Bot: 0					Bot: 0
Cracks: w/Efflorescence (use 6 in. width x length)	Bot: 15	Bot: 2	Bot: 19	Bot: 22	Bot: 17	Bot: 39					Bot: 114
w/o Efflo. (use 3 in. width x length)	Bot: 4	Bot: 2	Bot: 12	Bot: 5	Bot: 8	Bot: 9					Bot: 40
Map Cracking: w/Efflorescence (use full area)	Bot: 22	Bot: 188	Bot: 606	Bot: 261	Bot: 218	Bot: 0					Bot: 1295
w/o Efflo. (use 50% of area)	Bot: 455	Bot: 340	Bot: 238	Bot: 406	Bot: 874	Bot: 735					Bot: 3048
Honeycombed Areas (only areas more than 1 1/2 in deep)	Bot: 0	Bot: 0	Bot: 0	Bot: 1	Bot: 0	Bot: 0					Bot: 1
Total Deterioration (Square Feet)	501	536	886	724	1122	794					4563
Total Span Area (Square Feet)	6188	6105	5946	6264	6105	6188					36796
% Spalled and Delaminated on Top	0.0%	0.0%	0.0%	0.0%	0.0%	0.0%					0.0%
% Deterioration on Bottom	8.1%	8.8%	14.9%	11.6%	18.4%	12.8%					12.4%

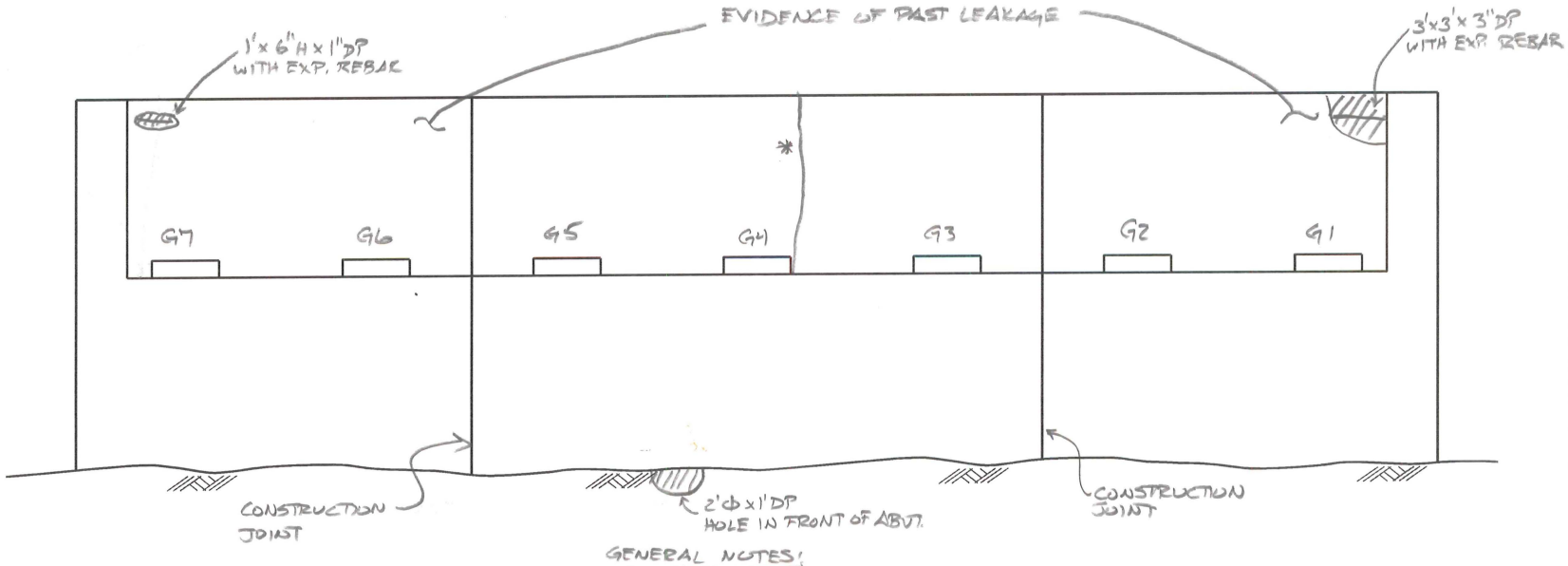

GENERAL NOTES:

- LT. TO MOD. ACCUMULATION OF SAND AND DEBRIS ON SEAT
- MUD STAINS ON STEM AND BACKWALL AT RANDOM LOCATIONS

LEGEND:

- HOLLOW AREA
- SHALLOW REBAR
- SPALL AREA
- SPALL AREA WITH EXPOSED REBAR
- MAPCRACKS
- HAIRLINE CRACKS
- EFFLORESCENCE IS PRESENT
- HONEYCOMB AREA
- SCALE AREA

WEST ABUTMENT

REVISION	DATE	CREW	REVISION	DATE	CREW
1			3		
2			4		

GM2 ASSOCIATES

FIELD NOTES

JOB NO. 170-3224

DATE: 4/22/2011

CREW: SRD, BJS

BRIDGE NO. 0331

SHEET 62 OF 80

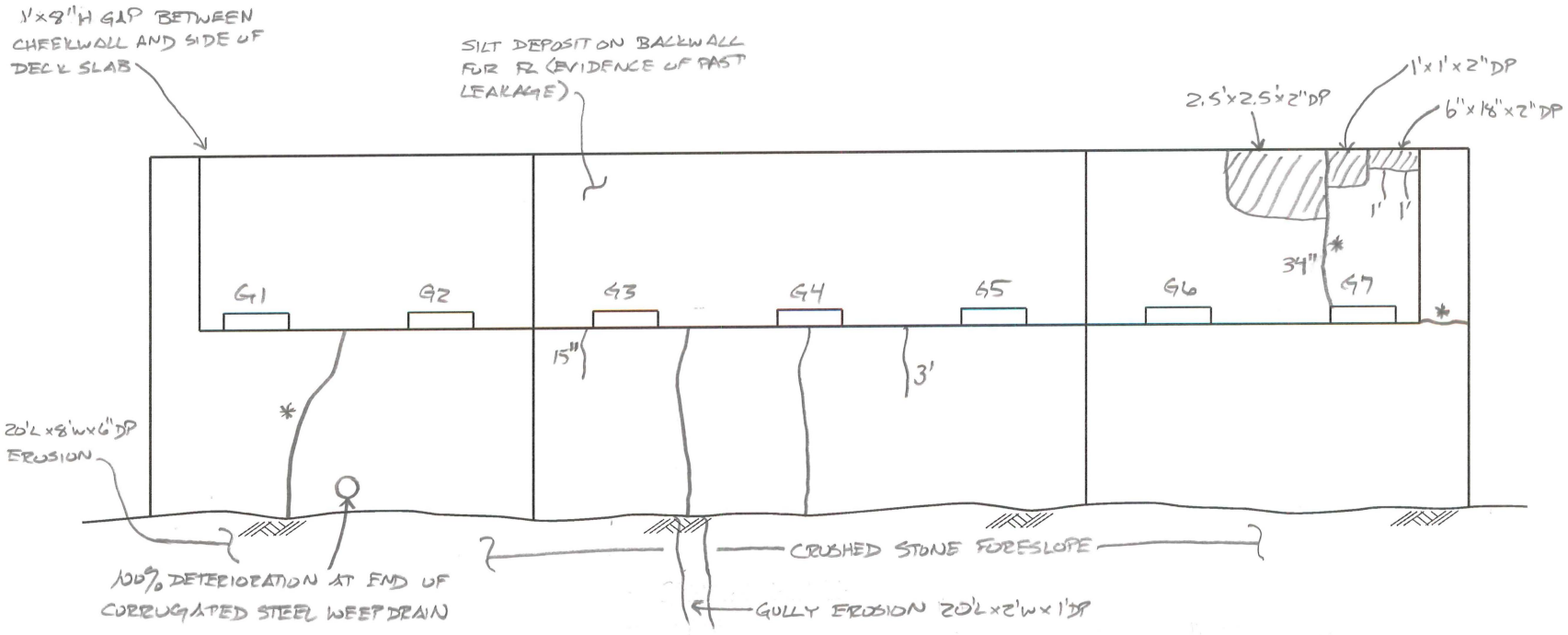

GENERAL NOTES:

- SILT DEPOSITS ON STEM FOR FL COVERING POSSIBLE HAIRLINE CRACKS
- SLOPE CONSISTS OF A VERY SILTY MATERIAL

LEGEND:

- HOLLOW AREA
- SHALLOW REBAR
- SPALL AREA
- SPALL AREA WITH EXPOSED REBAR
- MAPCRACKS
- HAIRLINE CRACKS
- EFFLORESCENCE IS PRESENT
- HONEYCOMB AREA
- SCALE AREA

EAST ABUTMENT

REVISION	DATE	CREW
1		
2		
3		
4		

GM2 ASSOCIATES

FIELD NOTES

JOB NO. 170-3224

DATE: 4/22/2014

CREW: SRD, BJS

BRIDGE NO. D3311

SHEET 63 OF 90

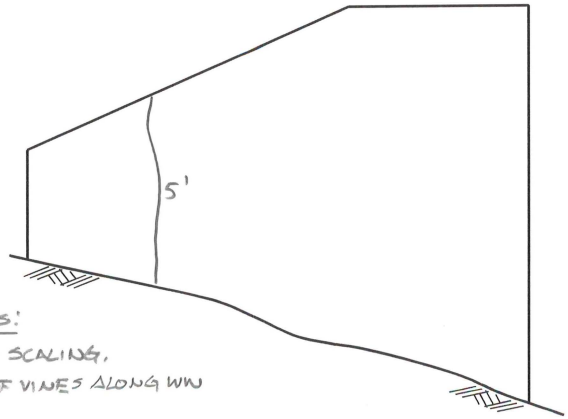

GENERAL NOTES:
- AREAS OF LT. SCALING.
- MOD. GROWTH OF VINES ALONG WW

SOUTHWEST WINGWALL

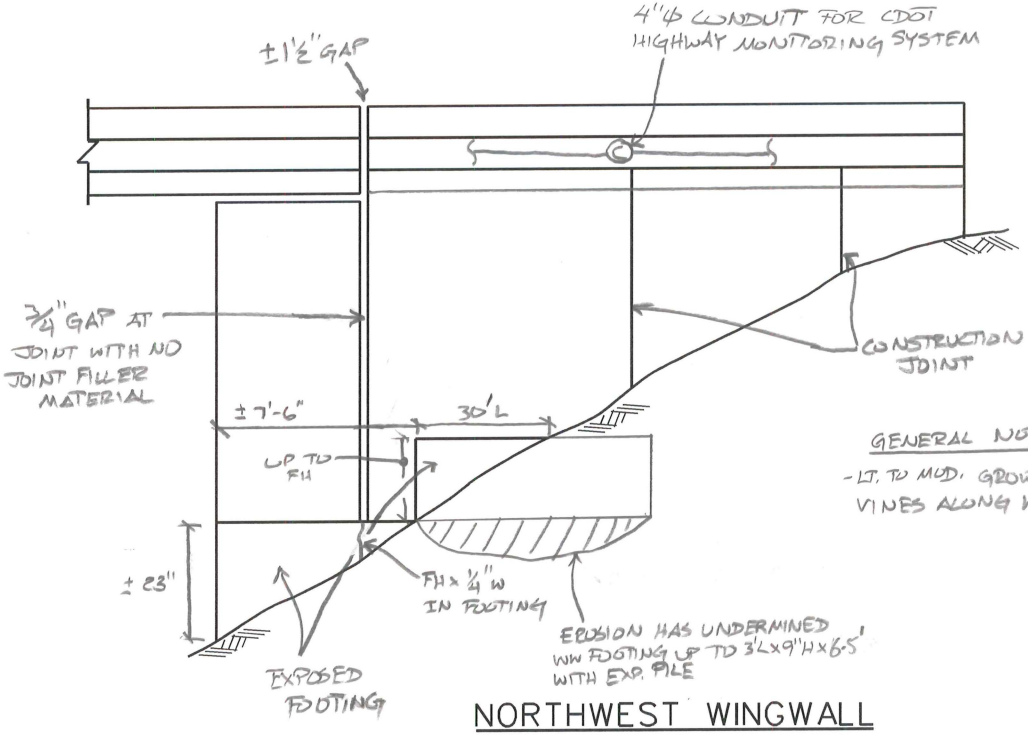

GENERAL NOTES:
- LT. TO MOD. GROWTH OF VINES ALONG WW.

NORTHWEST WINGWALL

LEGEND:
- HOLLOW AREA
- SHALLOW REBAR
- SPALL AREA
- SPALL AREA WITH EXPOSED REBAR
- MAPCRACKS
- HAIRLINE CRACKS
- EFFLORESCENCE IS PRESENT
- HONEYCOMB AREA
- SCALE AREA

REVISION 1	DATE	CREW	REVISION 3	DATE	CREW
REVISION 2	DATE	CREW	REVISION 4	DATE	CREW

GM2 ASSOCIATES

FIELD NOTES

JOB NO. 170-3224
DATE: 4/22/2014
CREW: SED, BJS (GM2)

BRIDGE NO. 03311
SHEET 64 OF 90

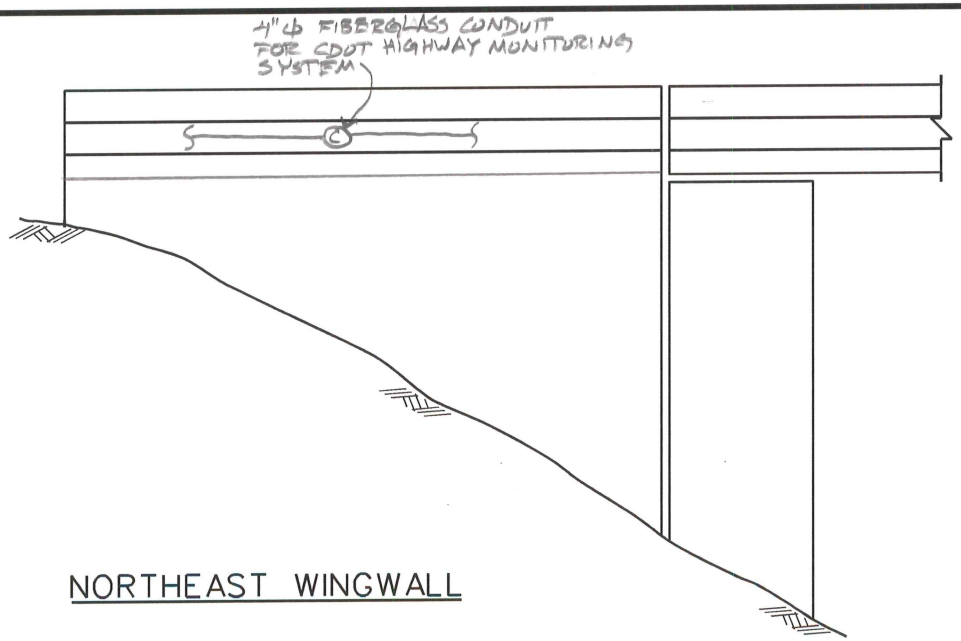

NORTHEAST WINGWALL

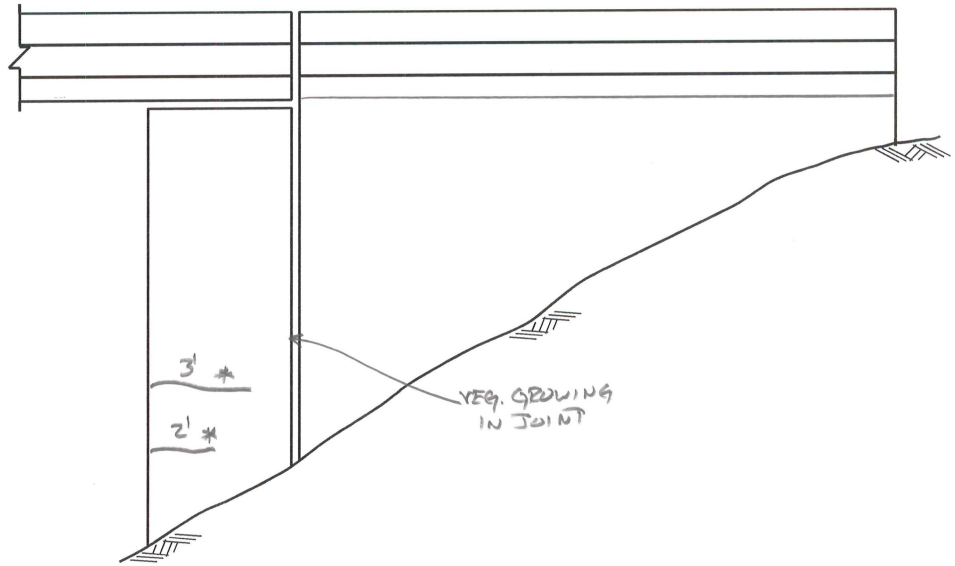

SOUTHEAST WINGWALL

GENERAL NOTES:

- MISSING JOINT FILLER MATERIAL FOR BOTH WW'S
- MOD. GROWTH OF VEG. ALONG BOTH WW'S

LEGEND:

- HOLLOW AREA
- SHALLOW REBAR
- SPALL AREA
- SPALL AREA WITH EXPOSED REBAR
- MAPCRACKS
- HAIRLINE CRACKS
- EFFLORESCENCE IS PRESENT
- HONEYCOMB AREA
- SCALE AREA

REVISION 1	DATE	CREW	REVISION 3	DATE	CREW
REVISION 2	DATE	CREW	REVISION 4	DATE	CREW

GM2 ASSOCIATES

FIELD NOTES

JOB NO. 170-3224

DATE: 4/22/2014

CREW: SRD, BJS (GMZ)

BRIDGE NO. 03311

SHEET 65 OF 80

GM2 ASSOCIATES	FIELD NOTES	JOB NO. 170-3224	BRIDGE NO. 03311
		DATE: 4/29/14	SHEET 66 OF 80
		CREW: SRD, AKC, BJS, CAW	

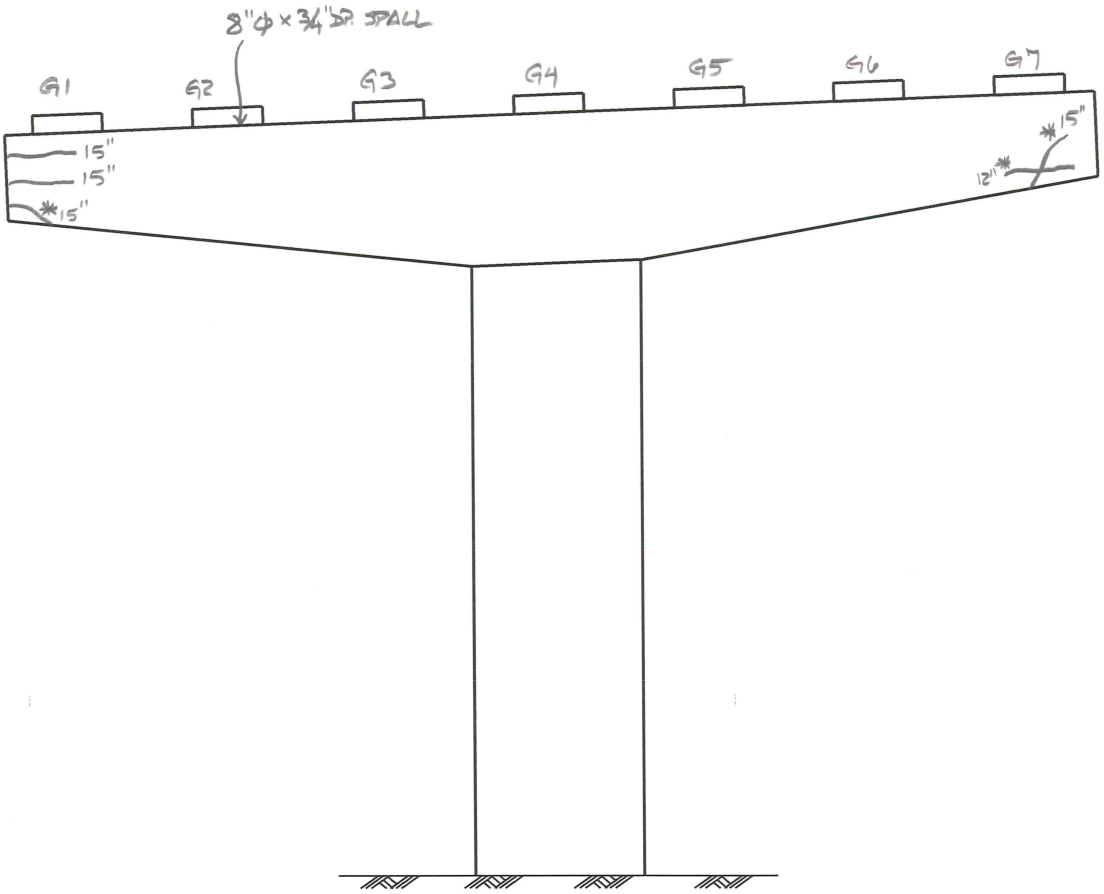

GENERAL NOTES:

- MOD. TO HVY. ACCUMULATION OF CONSTRUCTION DEBRIS ON TOP OF CAP AND AROUND BEARINGS (UP TO 6" DP.)
- EVIDENCE OF PAST LEAKAGE WITH MOD. STAINING

LEGEND:

- HOLLOW AREA
- SHALLOW REBAR
- SPALL AREA
- SPALL AREA WITH EXPOSED REBAR
- MAPCRACKS
- HAIRLINE CRACKS
- * EFFLORESCENCE IS PRESENT
- HONEYCOMB AREA
- SCALE AREA

PIER 1 (WEST ELEVATION)

REVISION 1	DATE	CREW	REVISION 3	DATE	CREW
REVISION 2	DATE	CREW	REVISION 4	DATE	CREW

GM2 ASSOCIATES	FIELD NOTES	JOB NO. 170-3224	BRIDGE NO. 03311
		DATE: 4/29/14	SHEET 67 OF 80
		CREW: SRD, AKC, BJS, CAW	

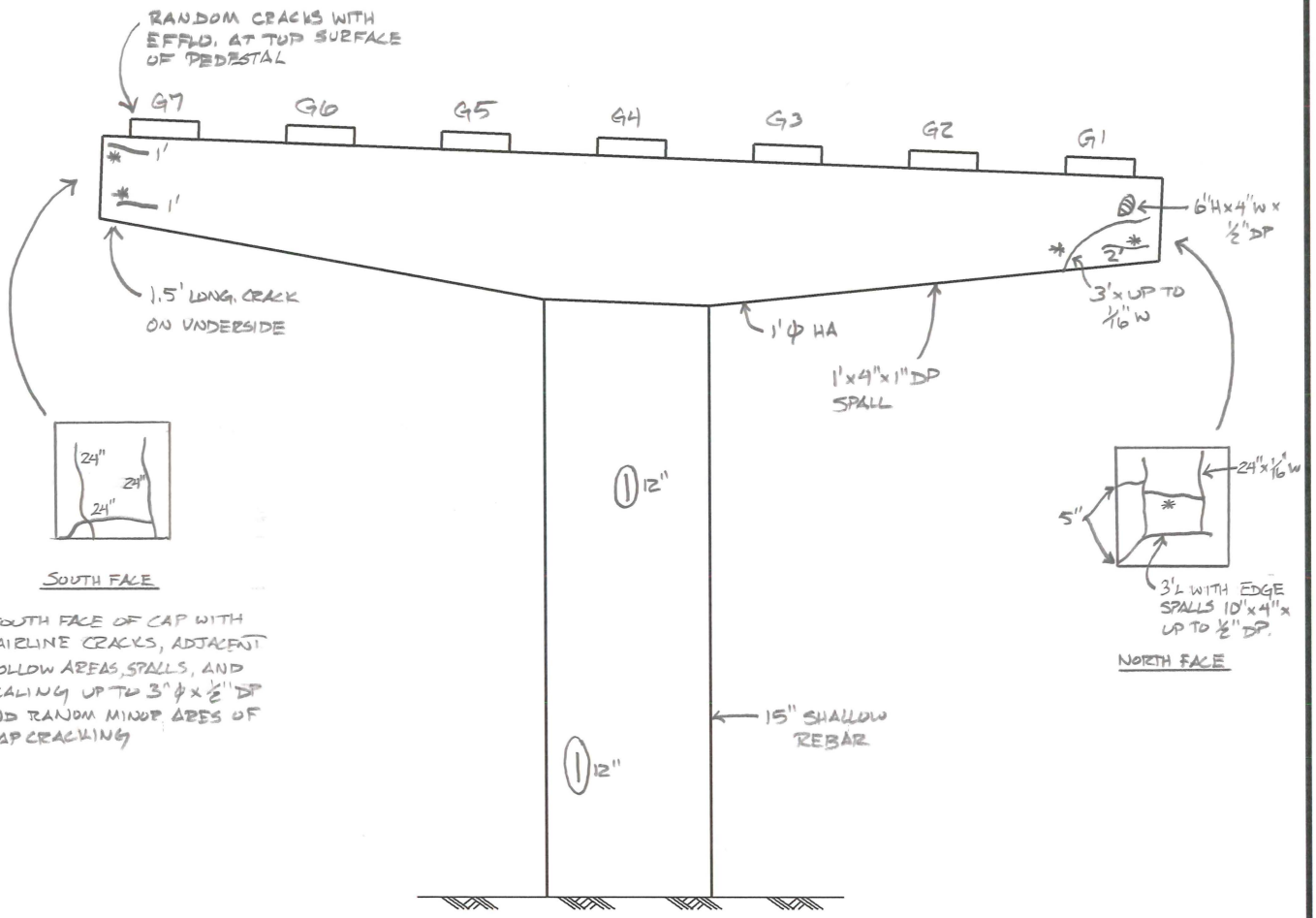

- SOUTH FACE OF CAP WITH HAIRLINE CRACKS, ADJACENT HOLLOW AREAS, SPALLS, AND SCALING UP TO 3" ϕ x ½" DP AND RANDOM MINOR AREAS OF MAPCRACKING

GENERAL NOTES:

- SEE PREVIOUS SHEET (PIER 1 WEST ELEVATION)

LEGEND:

- HOLLOW AREA
- SHALLOW REBAR
- SPALL AREA
- SPALL AREA WITH EXPOSED REBAR
- MAPCRACKS
- HAIRLINE CRACKS
- * EFFLORESCENCE IS PRESENT
- HONEYCOMB AREA
- SCALE AREA

PIER 1 (EAST ELEVATION)

REVISION 1	DATE	CREW	REVISION 3	DATE	CREW
REVISION 2	DATE	CREW	REVISION 4	DATE	CREW

GM2 ASSOCIATES	FIELD NOTES	JOB NO. 170-3224	BRIDGE NO. 03311
		DATE: 4/29/14	SHEET 68 OF 80
		CREW: SRD, AKC, BJS, CAW	

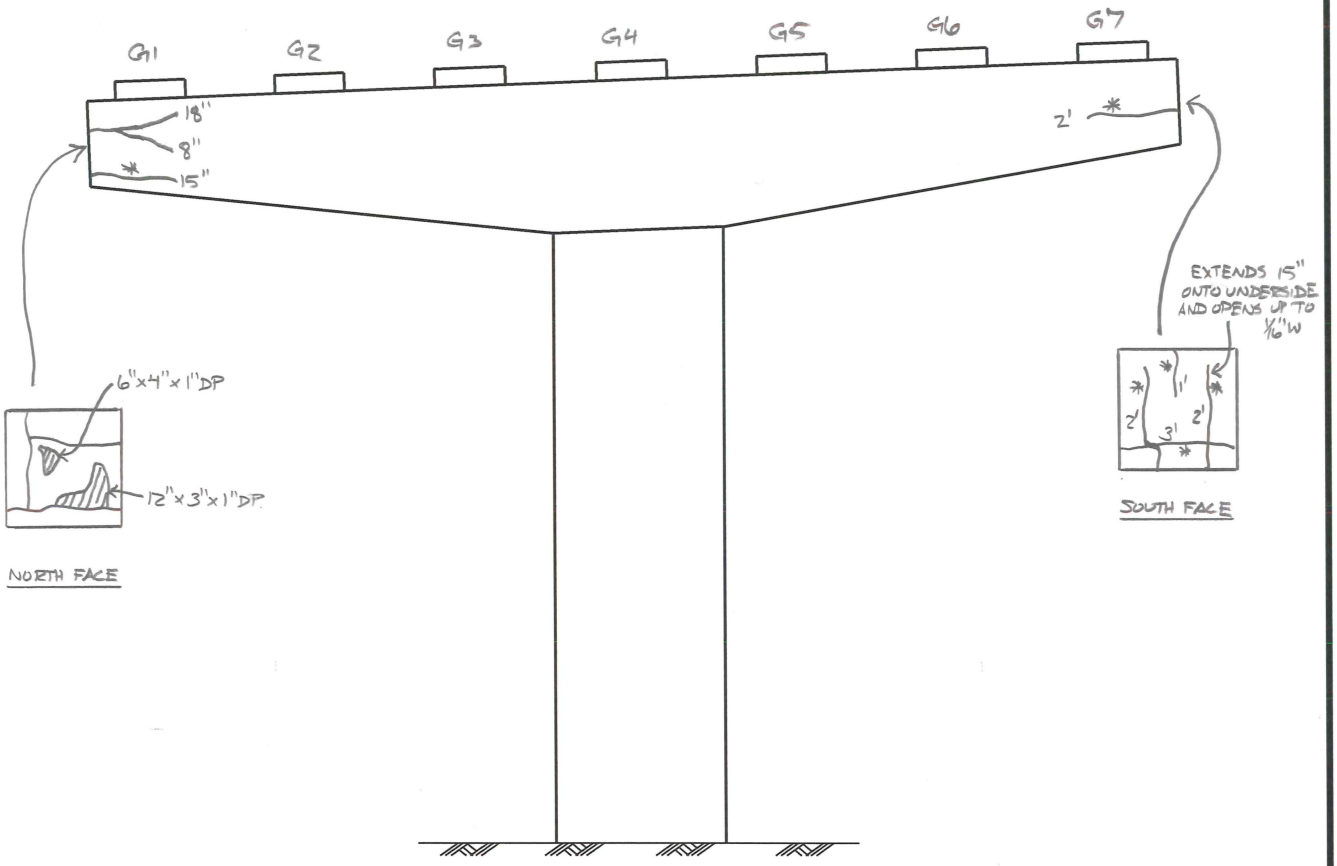

GENERAL NOTES:

- MOD. TO HVY ACCUMULATION OF DEBRIS ON TOP OF CAP AND AROUND BEARINGS
- EVIDENCE OF LEAKAGE WITH MOD. STAINING AND MOISTURE AT THE TOP

LEGEND:

- HOLLOW AREA
- SHALLOW REBAR
- SPALL AREA
- SPALL AREA WITH EXPOSED REBAR
- MAPCRACKS
- HAIRLINE CRACKS
- * EFFLORESCENCE IS PRESENT
- HONEYCOMB AREA
- SCALE AREA

PIER 2 (WEST ELEVATION)

REVISION 1	DATE	CREW	REVISION 3	DATE	CREW
REVISION 2	DATE	CREW	REVISION 4	DATE	CREW

GM2 ASSOCIATES	FIELD NOTES	JOB NO. 170-3224	BRIDGE NO. 03311
		DATE: 4/29/14	SHEET 69 OF 80
		CREW: SRD, AKC, BJS, CAW	

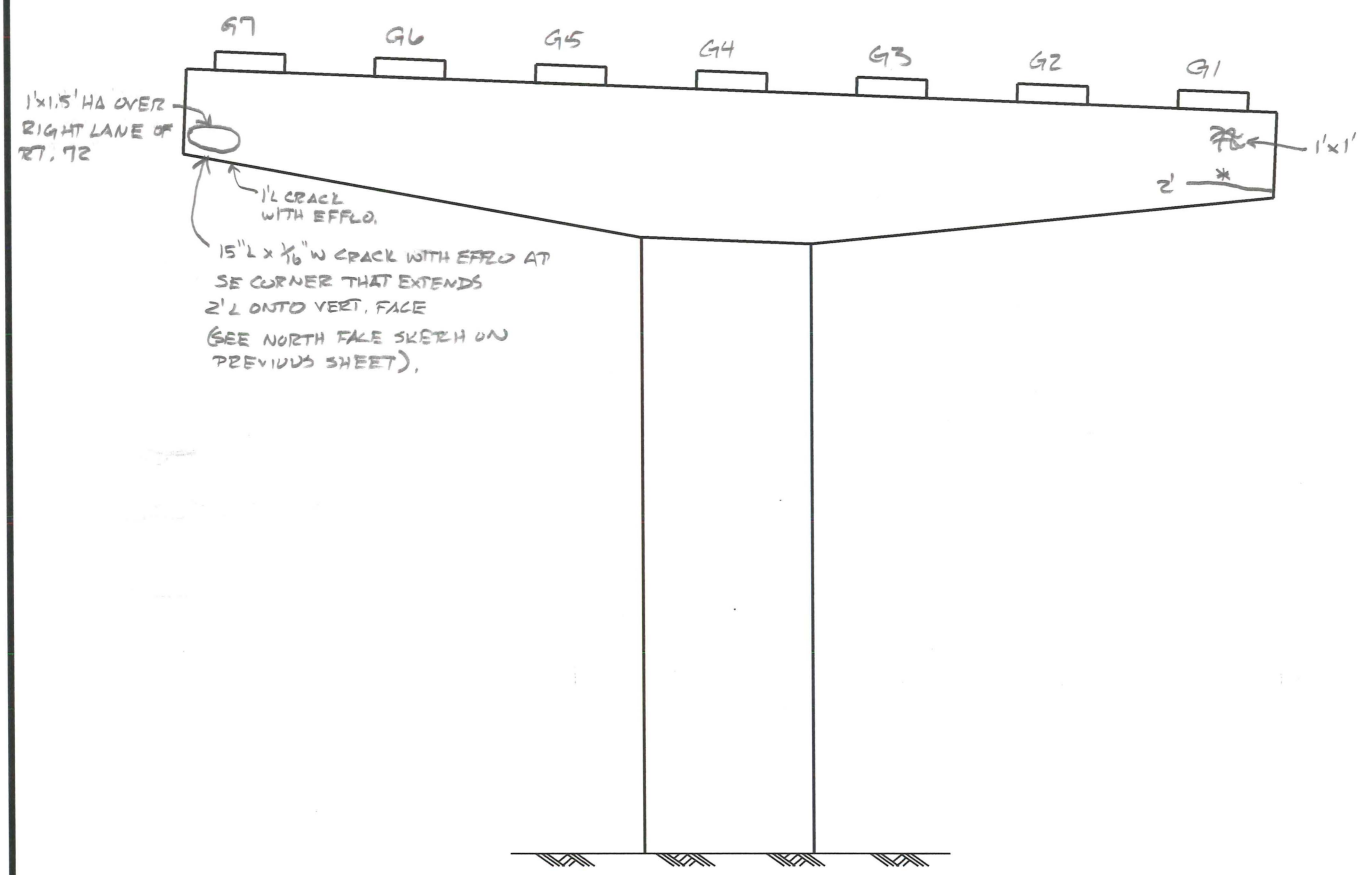

GENERAL NOTES:

- SEE PREVIOUS SHEET (PIER 2 WEST ELEVATION)

LEGEND:

- HOLLOW AREA
- SHALLOW REBAR
- SPALL AREA
- SPALL AREA WITH EXPOSED REBAR
- MAPCRACKS
- HAIRLINE CRACKS
- * EFFLORESCENCE IS PRESENT
- HONEYCOMB AREA
- SCALE AREA

PIER 2 (EAST ELEVATION)

REVISION 1	DATE	CREW	REVISION 3	DATE	CREW
REVISION 2	DATE	CREW	REVISION 4	DATE	CREW

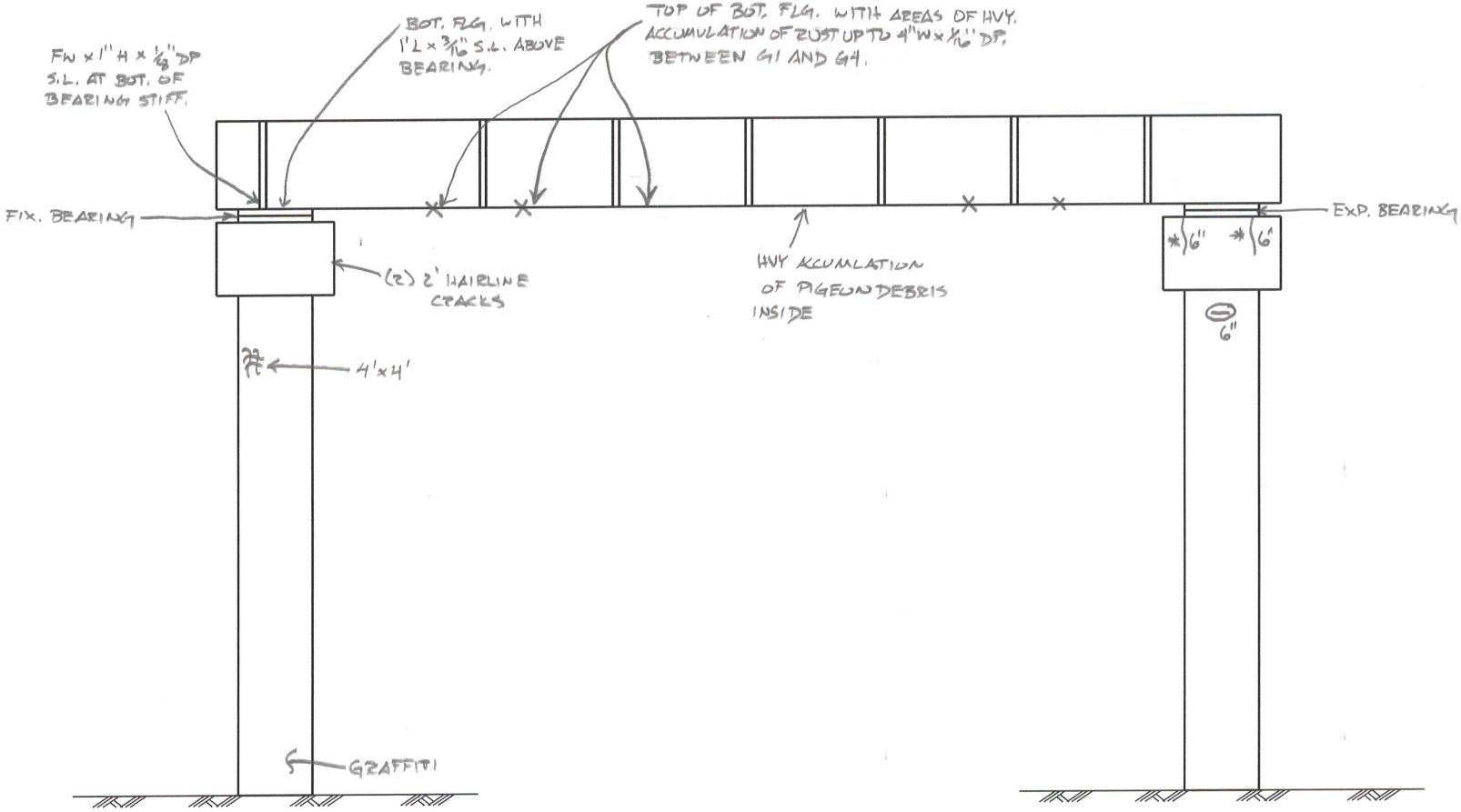

GENERAL NOTES:

-SMALL AREAS OF LAM. RUST ON GIRDERS

LEGEND:

- HOLLOW AREA
- SHALLOW REBAR
- SPALL AREA
- SPALL AREA WITH EXPOSED REBAR
- MAPCRACKS
- HAIRLINE CRACKS
- EFFLORESCENCE IS PRESENT
- HONEYCOMB AREA
- SCALE AREA
- X BOT. FLG. TRANSITION (INSPECTED HANDS ON)

PIER 3 (WEST ELEVATION)

REVISION 1	DATE	CREW	REVISION 3	DATE	CREW
REVISION 2	DATE	CREW	REVISION 4	DATE	CREW

GM2 ASSOCIATES

FIELD NOTES

JOB NO. 170-3224

DATE: 6/7/14

CREW: SRJ, AKC, PAH, BTS

BRIDGE NO. 03311

SHEET 70 OF 80

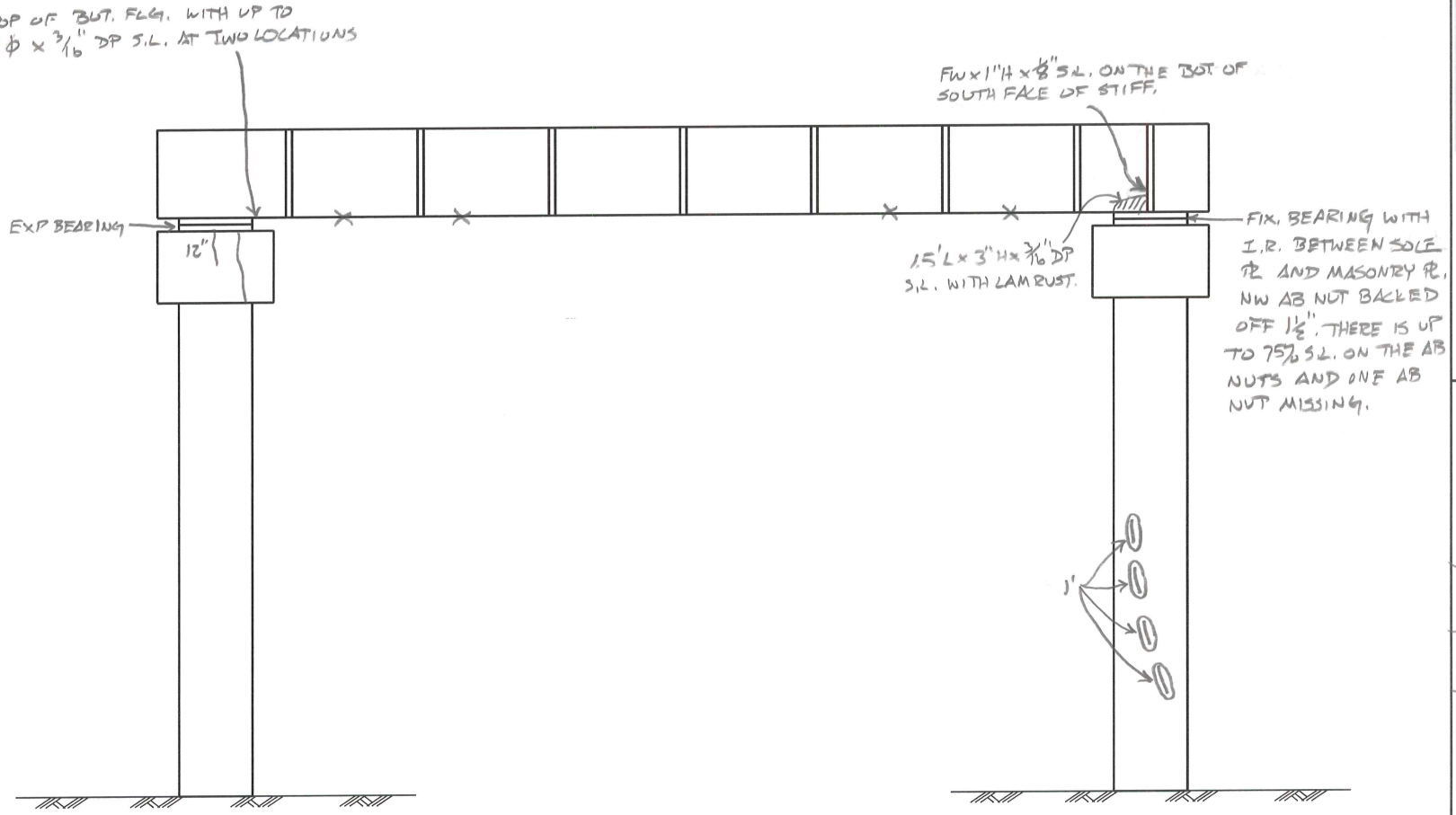

GENERAL NOTE:

- HVY. ACCUMULATION OF PIGEON DEBRIS ON BOTH COLUMNS.

LEGEND:

- HOLLOW AREA
- SHALLOW REBAR
- SPALL AREA
- SPALL AREA WITH EXPOSED REBAR
- MAPCRACKS
- HAIRLINE CRACKS
- EFFLORESCENCE IS PRESENT
- HONEYCOMB AREA
- SCALE AREA
- X BOT. FLG. TRANSITION (INSPECTED HANDS ON)

PIER 3 (EAST ELEVATION)

REVISION 1	DATE	CREW	REVISION 3	DATE	CREW
REVISION 2	DATE	CREW	REVISION 4	DATE	CREW

GM2 ASSOCIATES

FIELD NOTES

JOB NO. 170-3229

DATE: 6/7/14

CREW: SRD, AKC, PAH, BJS

BRIDGE NO. 03311

SHEET 71 OF 80

GM2 ASSOCIATES	FIELD NOTES	JOB NO. 170-3224	BRIDGE NO. 03311
		DATE: 6/4/14	SHEET 72 OF 80
		CREW: SRD, AKC	

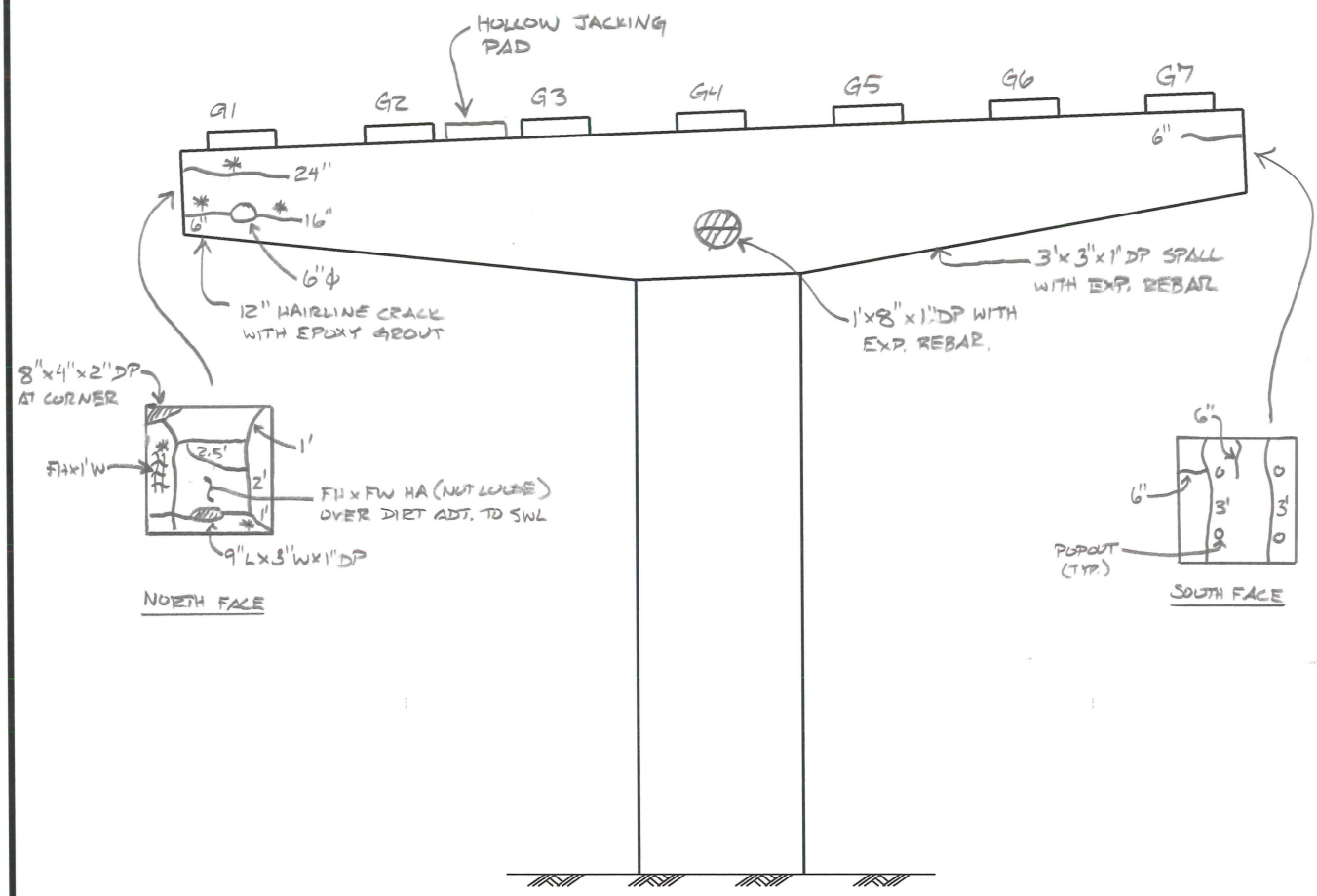

GENERAL NOTES:

- TOP OF CAP WITH LT. ACCUMULATION OF CONCRETE DEBRIS FOR FULL LENGTH AND RANDOM AREAS OF HVY. ACCUMULATION OF PIGEON DEBRIS
- EVIDENCE OF PAST LEAKAGE AT G1 AND IN BAYS 5 AND 6.
- FACES OF PIER CAP WITH MOD. SILT STAINING.

LEGEND:

- HOLLOW AREA
- SHALLOW REBAR
- SPALL AREA
- SPALL AREA WITH EXPOSED REBAR
- MAPCRACKS
- HAIRLINE CRACKS
- * EFFLORESCENCE IS PRESENT
- HONEYCOMB AREA
- SCALE AREA

PIER 4 (WEST ELEVATION)

REVISION 1	DATE	CREW	REVISION 3	DATE	CREW
REVISION 2	DATE	CREW	REVISION 4	DATE	CREW

GM2 ASSOCIATES	FIELD NOTES	JOB NO. 170-3224	BRIDGE NO. 03311
		DATE: 6/4/14	SHEET 73 OF 80
		CREW: SRD, AKC	

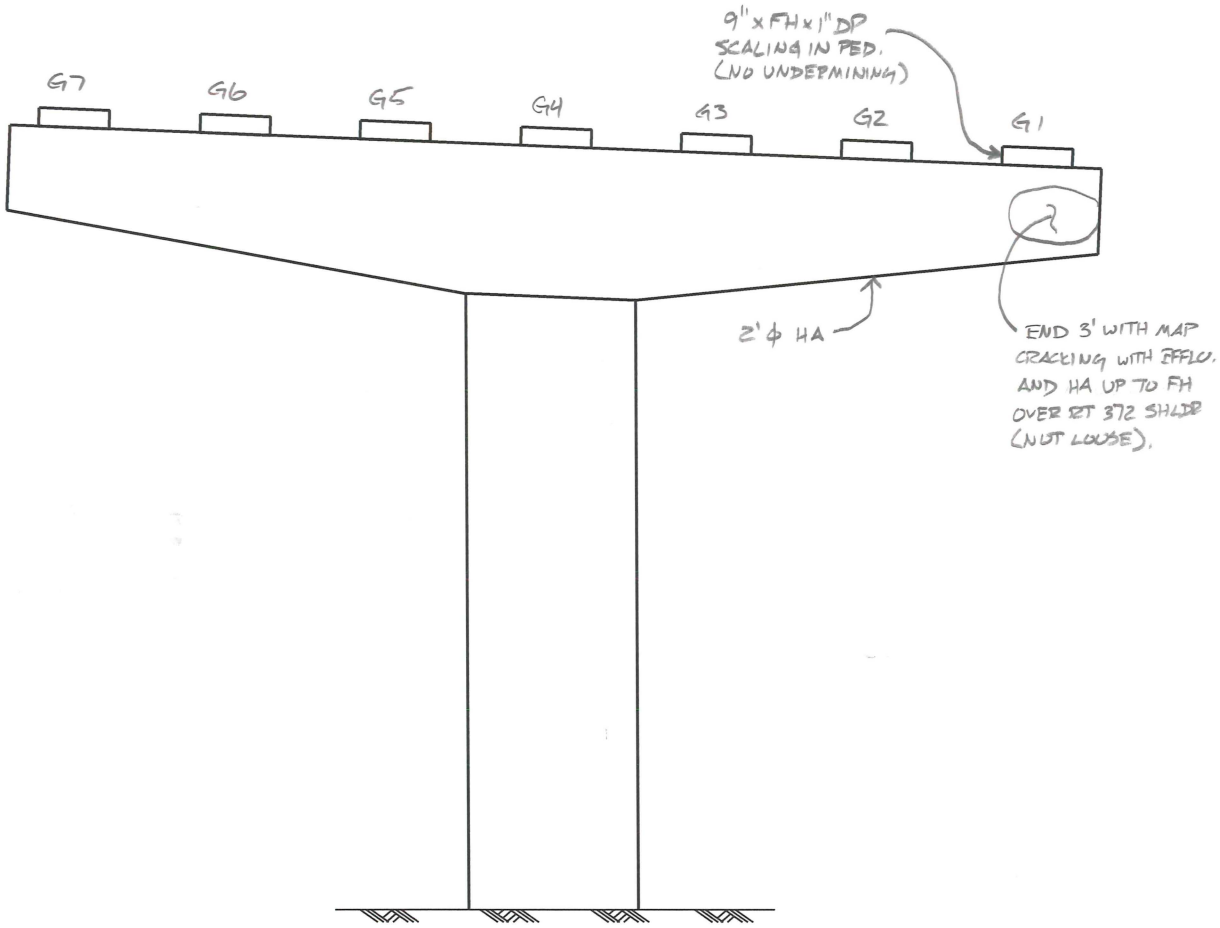

GENERAL NOTES:

- SEE PREVIOUS SHEET (PIER 4 WEST ELEVATION)

LEGEND:

- HOLLOW AREA
- SHALLOW REBAR
- SPALL AREA
- SPALL AREA WITH EXPOSED REBAR
- MAPCRACKS
- HAIRLINE CRACKS
- * EFFLORESCENCE IS PRESENT
- HONEYCOMB AREA
- SCALE AREA

PIER 4 (EAST ELEVATION)

REVISION 1	DATE	CREW	REVISION 3	DATE	CREW
REVISION 2	DATE	CREW	REVISION 4	DATE	CREW

GM2 ASSOCIATES	FIELD NOTES	JOB NO. 170-3224	BRIDGE NO. 03311
		DATE: 6/4/14	SHEET 74 OF 80
		CREW: SRD, AKC	

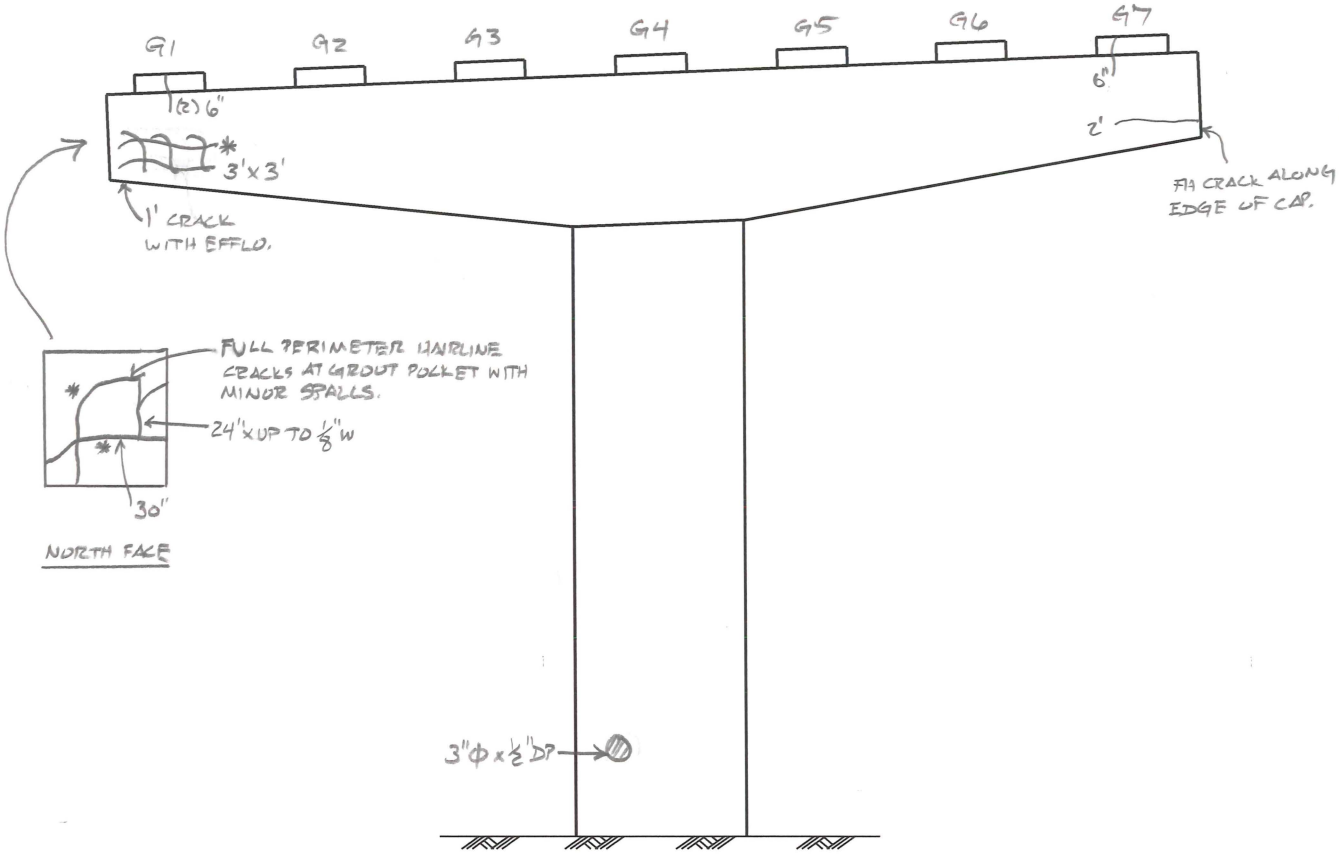

GENERAL NOTES:

- TOP OF PIER CAP WITH HVY. ACCUMULATION OF CONCRETE DEBRIS THAT HAS BEEN MOSTLY REMOVED EXCEPT UNDER BAY 1, BETWEEN BEAM ENDS AND ISOLATED BOTTOM FLANGES. MASONRY PLATES ARE COVERED AT SEVERAL LOCATIONS.
- EVIDENCE OF PAST LEAKAGE ALONG PIER CAP.

LEGEND:
- HOLLOW AREA
- SHALLOW REBAR
- SPALL AREA
- SPALL AREA WITH EXPOSED REBAR
- MAPCRACKS
- HAIRLINE CRACKS
- * EFFLORESCENCE IS PRESENT
- HONEYCOMB AREA
- SCALE AREA

PIER 5 (WEST ELEVATION)

REVISION 1	DATE	CREW	REVISION 3	DATE	CREW
REVISION 2	DATE	CREW	REVISION 4	DATE	CREW

GM2 ASSOCIATES	FIELD NOTES	JOB NO. 170-3224	BRIDGE NO. 03311
		DATE: 6/4/14	SHEET 75 OF 80
		CREW: SRD, MKC	

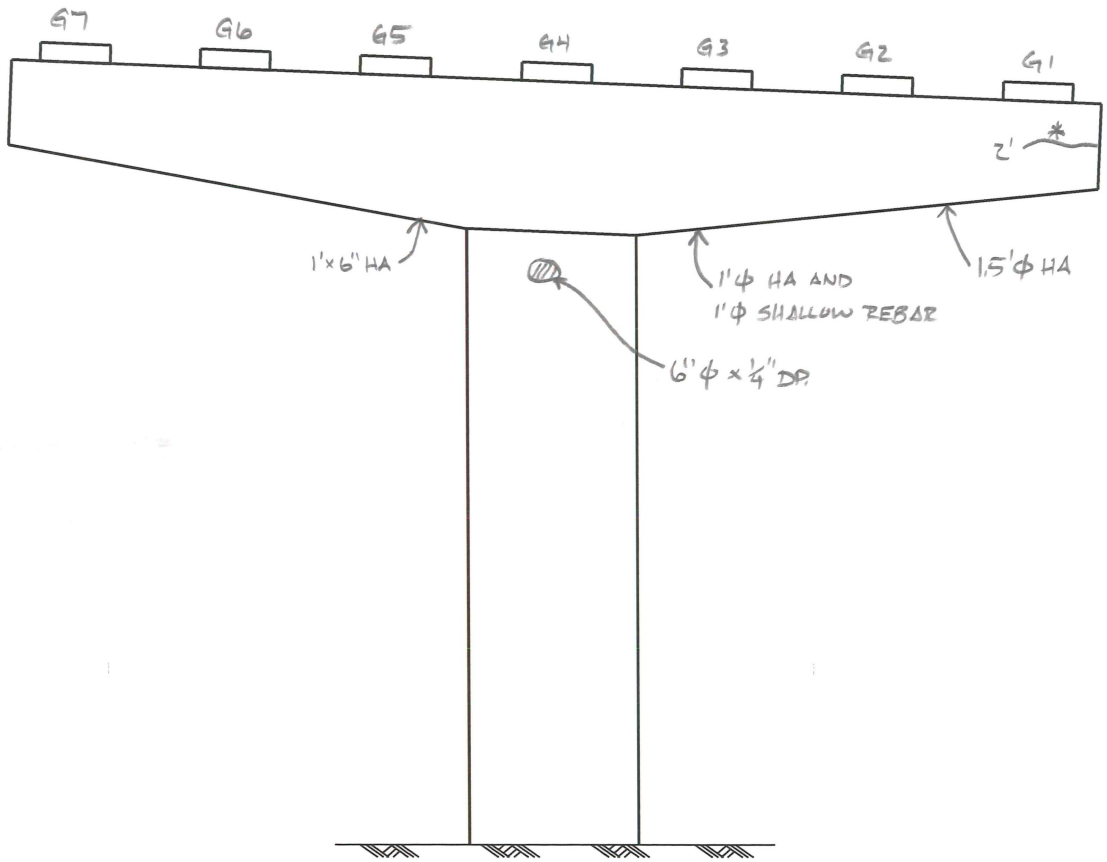

GENERAL NOTES:

-SEE PREVIOUS SHEET (PIER 5 WEST ELEVATION)

LEGEND:

- HOLLOW AREA
- SHALLOW REBAR
- SPALL AREA
- SPALL AREA WITH EXPOSED REBAR
- MAPCRACKS
- HAIRLINE CRACKS
- * EFFLORESCENCE IS PRESENT
- HONEYCOMB AREA
- SCALE AREA

PIER 5 (EAST ELEVATION)

REVISION 1	DATE	CREW	REVISION 3	DATE	CREW
REVISION 2	DATE	CREW	REVISION 4	DATE	CREW

PHOTO LOG

Form BRI-13, Rev. 9/97

76/80

Bridge Information System

Image Inventory

Bridge No. 03311 **Date** 04/22/14

Town: Plainville **Photographer:** SRD

Carried / Crossed: I-84 WB over Rte. 72, Rte 372, Q. Rivers & Panam RR.

Film Frame #	Image Description
1	Brg. for G1 @ E. Abut
2.	East Abut. elev.
3.	East Abut. backwall in Bay 6
4.	Southeast ww elev.
5.	Erosion in front of E. Abut. below Bay 3
6.	Pier 5, east elev.
7	Underside of deck in span 6
8	Underside of deck in span 5
9	East elev. of Pier 4.
10	N. elev.
11.	Erosion along NW wingwall footing.
12.	NW wingwall elev.
13	West Abut. elev.
14.	spall in W. Abut. backwall behind G1.
15	Brg. for G1 at W. Abut.
16	Pier 1, West elev.
4/29/14 17.	Addl. shift. w/ intermittent back welds @ 1st shift from brg. on
	the north side of G5 @ Pier 2 in Span 3
18.	Exp. brg for G5 at Pier 2 in Span 3
19	Weld @ lower conn of X-frame to stiffener, on South side
	of G6 in Span 3 at Pier 2.
20.	Missing weld @ top of conn. b/w X-frame to stiffener on north
	side of G2 at Pier 2 in Span 2
21, 22	North face of G1 at Pier 1 in Span 2.

PHOTO LOG

Form BRI-13, Rev. 9/97

77/80

Bridge Information System

Image Inventory

Bridge No. 03311 Date 04/29/14

Town: Plainville Photographer: SRD

Carried / Crossed: I-84 WB over Rte. 72, Rte 372, Q River & RR.

Film Frame #	Image Description
23	North face of G1 @ Pier 1 in Span 1.
24	North face of G1 at top @ Pier 1 in span 2
25	Northeast faces of Pier 1 cap below G1.
26.	Exp. brg bar G5 at Pier 1 in Sp. 2
27.	Cracked weld @ lower conn. b/w 1st X-frame from P1 & shift,
	north side of G3 in Span 2. (crack on westside of X-frame)
28	Cracked weld @ bottom 2nd X-frame from Pier 1 conn. to
	shift, in Span 1 on south side of G2.
6/2/14 29.	West appr. from the bridge
30	Southwest appr. guiderail
31	Bridge from West appr.
32	Appr. guide rail at southwest corner.
33.	West appr. pavement
34.	Overlay in Span 1
35, 36	Deck Jt. at West Abut.
37, 38	Deck Jt. at Pier 1.
39	Deck Jt. at Pier 1 in left shoulder.
40	S. parapet in Sp. 2. Note shallow rebar
41.	Deck Jt at Pier 2.
42.	Overlay in Span 3
43	Deck Jt. at Pier 3.
44	Deck Jt. at Pier 4
45	Deck Jt at Pier 5
46	East appr. from the bridge.

PHOTO LOG

Form BRI-13, Rev. 9/97

78/90

Bridge Information System

Image Inventory

Bridge No. 03311 Date 06/02/14

Town: Plainville Photographer: SRD/AKC

Carried / Crossed: I-84 WB over Rte. 72, Rte. 372, Q. River & RR

Film Frame #	Image Description
47.	Deck Jt. at East Abut.
48	Appr. guide rail at SE corner.
49	Collision damage in SE appr. guide rail.
50	Bridge from east appr.
51	East appr. pavement
52	collision damage in appr. guide rail @ NW corner.
53	Deck Jt. at W. Abut
54	Ppt's curb along N. fascia in Span 1.
55	Deck Jt. at Pier 1
56	Ppt's curb along N. fascia in Span 2.
57.	Overlay in Span 2.
58	Deck Jt. at Pier 2.
59	Deck Jt. at Pier 3.
60	Lt. std & J. Box lower in north ppt, near Pier 3 in Span 4.
61.	Deck Jt. at Pier 4
62	Deck Jt. at Pier 5
63.	Bridge ID
64	Deck Jt. at East Abut.
65, 66	Appr. guide rail at the Northeast corner.
67.	Lt. std. on north ppt. in Span 6.
6/4/14 68	Underside of deck in Bay 5, span 6 near mid-span. Note spalls
69	Fxd. brg for G3 at Pier 5, Span 6
70	Tree growing underside bridge in Sp. 6, Bay 1 @ 1st x-frame
	from Pier 5.

PHOTO LOG

Form BRI-13, Rev. 9/97

79/80

Bridge Information System

Image Inventory

Bridge No. 03311 **Date** 6/4/14

Town: Plainville **Photographer:** SRD/AKC

Carried / Crossed: I-84 WB over Rte. 72, Rte. 372, Q. River & RR

Film Frame #	Image Description
71	North side of G1 @ Pier 5 in Spans 5 & 6.
72, 73	Haunch spalls @ Pier 5, south side of G7 in Spans 5 & 6
74	Exp. brg for G 6 at Pier 5 in Span 5. Note debris.
75	Exp. brg for G1 at Pier 5 in Span 5. Note hvy. rust
76, 77	Hvy. rust on BF of G1 in Span 5 near Pier 5. (North side of G1) &
	rust hole in stiffener.
78	North side of G1 @ Pier 5 in Span 5. Note SL in NW stiffener.
79	North side of G1 at Pier 4 in Spans 4 & 5
80	Broken weld @ bottom conn. of X-frame to stiffener on south
	side of G1 at Pier 4 in Span 5.
81	section loss in BF & TF of G1 south side near mid-span of
	Span 4.
82	North face Pier 3 cap girder.
83	North face of G1 hinge conn. at Pier 3 in Span 4
84	Fxd. brg for Pier 3 cap girder.
85	Cracked weld @ bottom conn. of X-frame to stiffener
	on south side of G2 at Pier 3 in Span 4
86	Spall in end of deck at Pier 3, in Span 4 in Bay 1.
87	West side of Pier 3 cap girder, fixed brg. Note AB
	nut backed off & section in AB nut & bottom of brg. stiffener.
6/6/14 88, 89	Exp. brg for P3 cap girder
90	north side of G6 hinge conn. @ Pier 3 in Span 3
91	South side of G4 hinge conn. at Pier 3 in Span 3
92	North side of G2 hinge conn. at Pier 3 in Span 3

PHOTO LOG

Form BRI-13, Rev. 9/97

80/80

Bridge Information System

Image Inventory

Bridge No. 03311 Date 06/06/14

Town: Plainville Photographer: SRD

Carried / Crossed: I-84 WB over Rte. 72, Rte. 372, Q. River & RR

Film Frame #	Image Description
93	South side of G1 hinge conn. at Pier 3 in Span 3.
94	North side of G2 hinge conn. at Pier 3 in Span 4.
95	South side of G1 hinge conn. at Pier 3 in Span 4.
96	North side of G1 hinge conn. at Pier 3 in Span 4.
6/7/14 97	Section loss in BF of G1 on south side in Span 3, b/w 2nd & 3rd
	X-frames from Pier 3
98	Underside of deck in Bay 3 b/w 1st & 2nd X-frames from
	Pier 2 in Span 3. Note HCMC & spalls.
99	Exp. brg for G1 at Pier 2 in Span 3.
101, 100	Top of G1 on north side at Pier 2 in Span 3. Note rust holes
	in NW brg. stiffener and section loss. (101 is e bottom)
102	SL in NE & NW brg. stiffeners on north side of G1 at
	Pier 2 in Span 2.
103	Cracked weld at bottom of conn. b/w X-frame & stiffener
	on south side of G1 at Pier 2 in Span 2.
104	Rust hole in SE stiffener at top, on south side of G1
	at Pier 2 in Span 2.
105	Pier 3, east elev.
106, 107	N. elev.
108	S. elev.
109 & 110	North & east face of Pier 4 cap
111 & 112	East face of Pier 2 cap below Girder G1
113	Bay 1 in Span 2 near Pier 2.

Bridge No.:	03311	**Inspected by:**	Suresh Dontula
Town:	Plainville, CT	**Inspected by:**	Amit KC
Feature Carried:	I-84 Westbound	**Date Inspected:**	April 22, 2014
Feature Crossed:	Route 72 WB, Rte. 372 & PanAM RR	**Project No.:**	170-3224

Photo # 1: Bridge Identification Number.

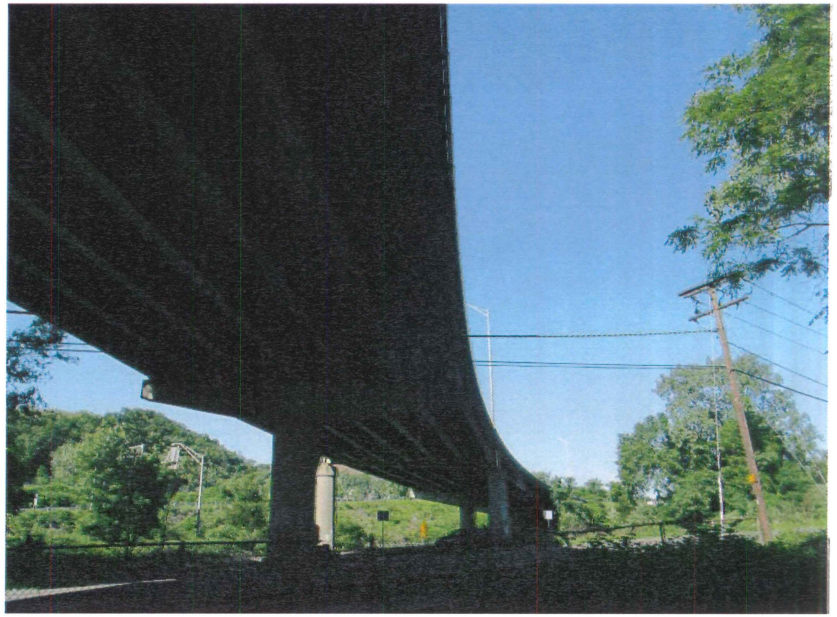

Photo # 2: North elevation.

Bridge No.:	03311	**Inspected by:**	Suresh Dontula
Town:	Plainville, CT	**Inspected by:**	Amit KC
Feature Carried:	I-84 Westbound	**Date Inspected:**	April 22, 2014
Feature Crossed:	Route 72 WB, Rte. 372 & Pan Am RR	**Project No.:**	170-3224

Photo # 3: South elevation.

Photo # 4: Bridge from the west approach.

Bridge No.:	03311	**Inspected by:**	Suresh Dontula
Town:	Plainville, CT	**Inspected by:**	Amit KC
Feature Carried:	I-84 Westbound	**Date Inspected:**	April 22, 2014
Feature Crossed:	Route 72 WB, Rte. 372 & Pan Am RR	**Project No.:**	170-3224

Photo # 5: West approach from the bridge.

Photo # 6: Bridge from the east approach.

Bridge No.:	03311	**Inspected by:**	Suresh Dontula
Town:	Plainville, CT	**Inspected by:**	Amit KC
Feature Carried:	I-84 Westbound	**Date Inspected:**	April 22, 2014
Feature Crossed:	Route 72 WB, Rte. 372 & Pan Am RR	**Project No.:**	170-3224

Photo # 7: East approach from the bridge.

Photo # 8: View of the overlay in Span 1. Note that the paving seam is open up to 1" wide.

Bridge No.:	03311	**Inspected by:**	Suresh Dontula
Town:	Plainville, CT	**Inspected by:**	Amit KC
Feature Carried:	I-84 Westbound	**Date Inspected:**	April 22, 2014
Feature Crossed:	Route 72 WB, Rte. 372 & Pan Am RR	**Project No.:**	170-3224

Photo # 9: View of the overlay in Span 3. Note the isolated longitudinal crack.

Photo # 10: Underside of deck and framing in Span 5.

Bridge No.:	03311	**Inspected by:**	Suresh Dontula
Town:	Plainville, CT	**Inspected by:**	Amit KC
Feature Carried:	I-84 Westbound	**Date Inspected:**	April 22, 2014
Feature Crossed:	Route 72 WB, Rte. 372 & Pan Am RR	**Project No.:**	170-3224

Photo # 11: Underside of deck in Bay 3 of Span 3 and between 1st and 2nd cross frames from Pier 2. Note the hairline map cracking and spalls.

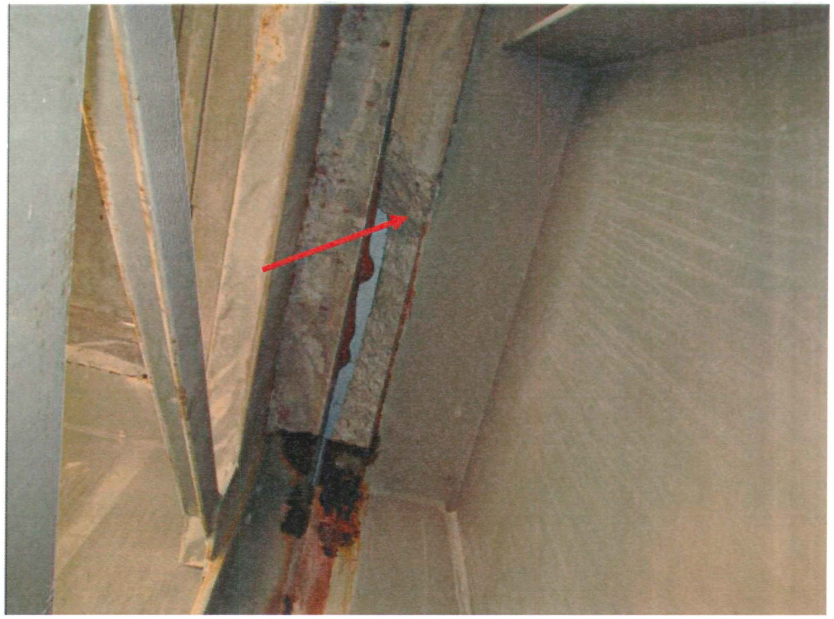

Photo # 12: Spall in the deck end of Bay 1 in Span 4 at Pier 3.

Bridge No.:	03311	**Inspected by:**	Suresh Dontula
Town:	Plainville, CT	**Inspected by:**	Amit KC
Feature Carried:	I-84 Westbound	**Date Inspected:**	April 22, 2014
Feature Crossed:	Route 72 WB, Rte. 372 & Pan Am RR	**Project No.:**	170-3224

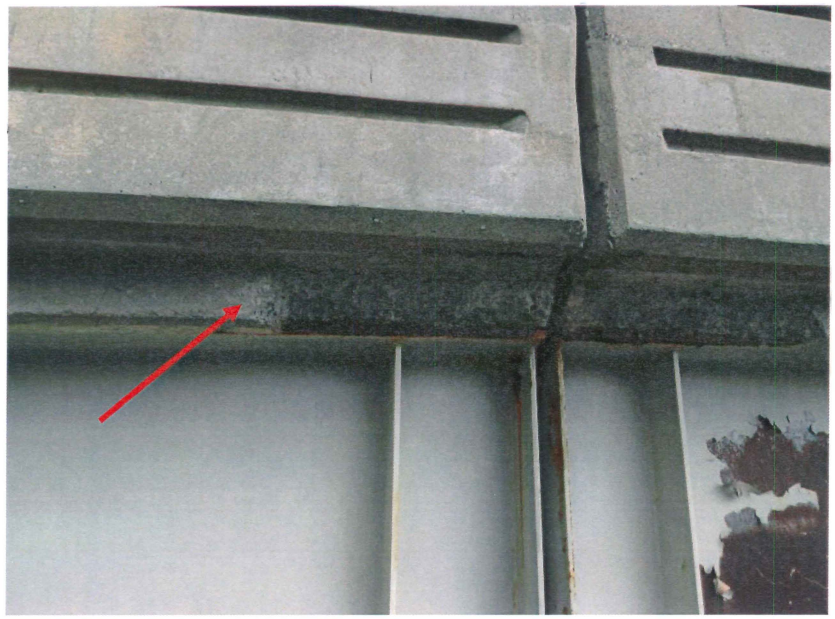

Photo # 13: Hollow haunch and haunch spalls in Spans 5 and 6 at Pier 5 along the south side of Girder G7.

Photo # 14: Tree growing in Bay 1 of Span 6 at the 1st cross frame from Pier 5.

Bridge No.:	03311	**Inspected by:**	Suresh Dontula
Town:	Plainville, CT	**Inspected by:**	Amit KC
Feature Carried:	I-84 Westbound	**Date Inspected:**	April 22, 2014
Feature Crossed:	Route 72 WB, Rte. 372 & Pan Am RR	**Project No.:**	170-3224

Photo # 15: Curb and parapet along the north fascia in Span 1.

Photo # 16: South fascia in Span 2. Note the several shallow rebar up to 1' long in the parapet.

Bridge No.:	03311	**Inspected by:**	Suresh Dontula
Town:	Plainville, CT	**Inspected by:**	Amit KC
Feature Carried:	I-84 Westbound	**Date Inspected:**	April 22, 2014
Feature Crossed:	Route 72 WB, Rte. 372 & Pan Am RR	**Project No.:**	170-3224

Photo # 17: Lighting standard on top of the north parapet in Span 6. Note that the anchor bolt covers are missing.

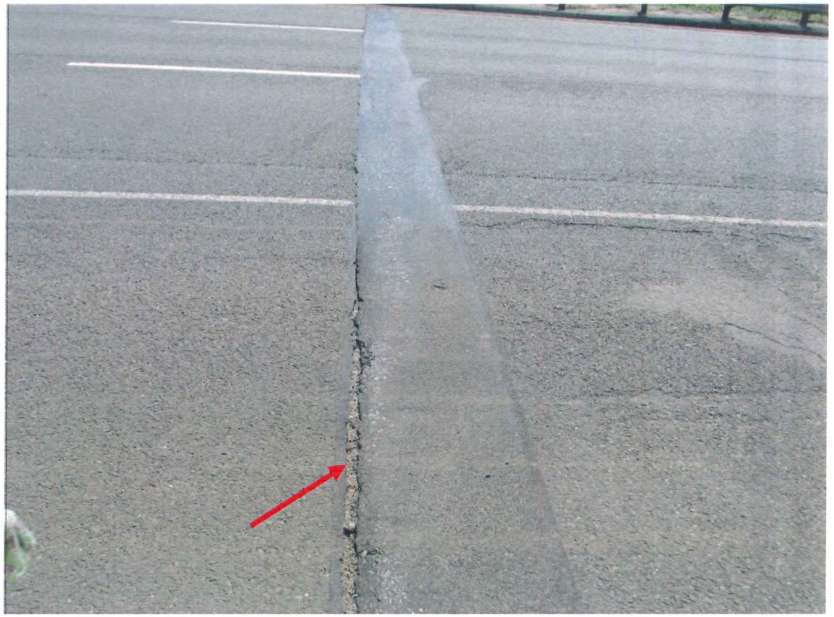

Photo # 18: Deck joint at the West Abutment. Note the adhesion separation crack.

Bridge No.:	03311	**Inspected by:**	Suresh Dontula
Town:	Plainville, CT	**Inspected by:**	Amit KC
Feature Carried:	I-84 Westbound	**Date Inspected:**	April 22, 2014
Feature Crossed:	Route 72 WB, Rte. 372 & Pan Am RR	**Project No.:**	170-3224

Photo # 19: Deck joint at Pier 1. Note the adhesion separation crack and depressed area.

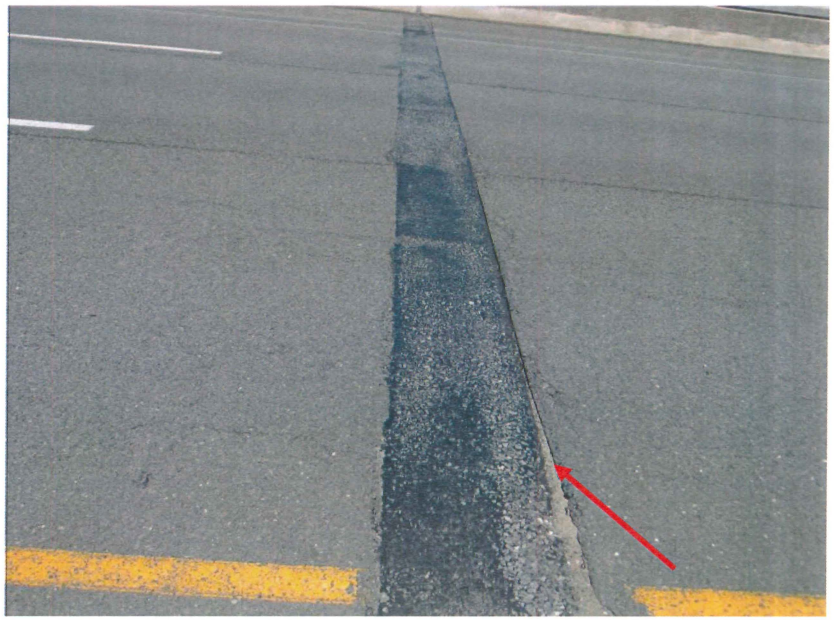

Photo # 20: Deck joint at Pier 2. Note the adhesion separation crack.

Bridge No.:	03311	**Inspected by:**	Suresh Dontula
Town:	Plainville, CT	**Inspected by:**	Amit KC
Feature Carried:	I-84 Westbound	**Date Inspected:**	April 22, 2014
Feature Crossed:	Route 72 WB, Rte. 372 & Pan Am RR	**Project No.:**	170-3224

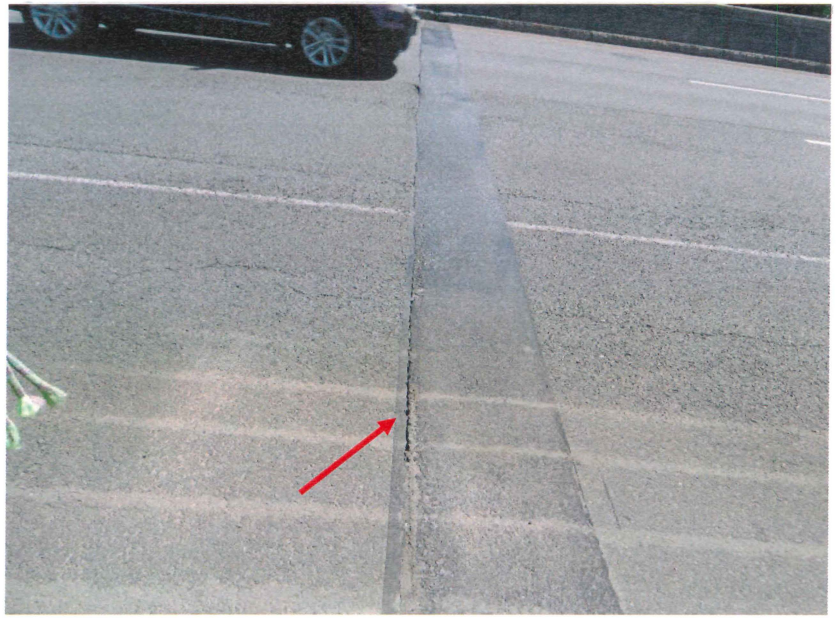

Photo # 21: Deck joint at Pier 5. Note the adhesion separation crack.

Photo # 22: Expansion pot bearing for Girder G1 at the West Abutment. Note the heavy rust with laminar rust on the bearing.

Bridge No.:	03311	**Inspected by:**	Suresh Dontula
Town:	Plainville, CT	**Inspected by:**	Amit KC
Feature Carried:	I-84 Westbound	**Date Inspected:**	April 22, 2014
Feature Crossed:	Route 72 WB, Rte. 372 & Pan Am RR	**Project No.:**	170-3224

Photo # 23: Fixed pot bearing for Girder G3 at Pier 5 in Span 6. Note the heavy accumulation of debris on the pier cap.

Photo # 24: Expansion bearing for Pier 3 cap girders. Note the backed off anchor bolt nut.

Bridge No.:	03311	**Inspected by:**	Suresh Dontula
Town:	Plainville, CT	**Inspected by:**	Amit KC
Feature Carried:	I-84 Westbound	**Date Inspected:**	April 22, 2014
Feature Crossed:	Route 72 WB, Rte. 372 & Pan Am RR	**Project No.:**	170-3224

Photo # 25: Fixed bearing for the Pier 3 cap girders. Note the pack rust between the plates and rust with section loss in the cap girder web.

Photo # 26: West side of the fixed bearing for the Pier 3 cap girders. Note the backed off anchor bolt nut and section loss in the anchor bolt nut. Also note the section loss along the bottom of bearing stiffener for cap girder.

Bridge No.:	03311	**Inspected by:**	Suresh Dontula
Town:	Plainville, CT	**Inspected by:**	Amit KC
Feature Carried:	I-84 Westbound	**Date Inspected:**	April 22, 2014
Feature Crossed:	Route 72 WB, Rte. 372 & Pan Am RR	**Project No.:**	170-3224

Photo # 27: South side of Girder G1 hinge connection at Pier 3 in Span 3. Note the areas of rust with section loss in the fixed hinge plates and girder web adjacent to the hinge plates.

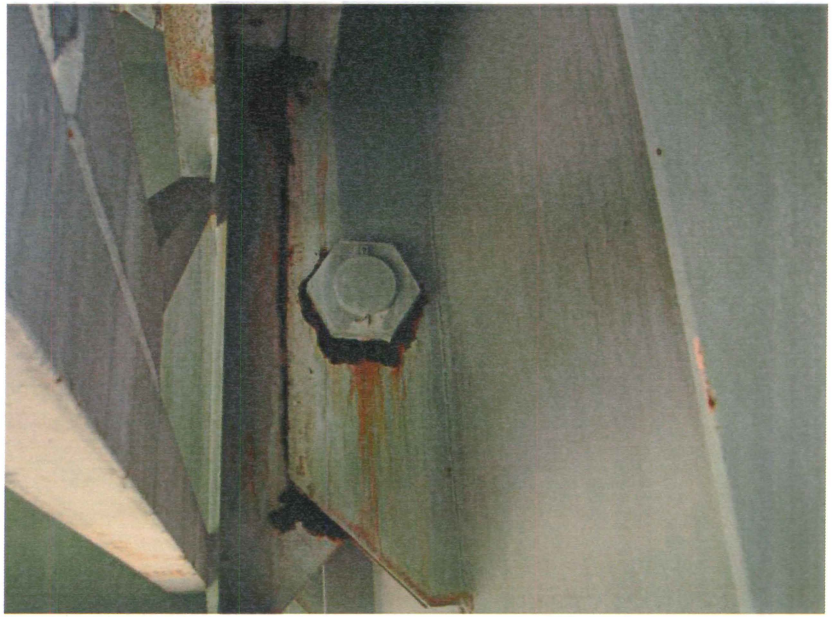

Photo # 28: South side of Girder G4 hinge connection at Pier 3 in Span 3. Note the areas of rust with section loss in the fixed hinge plates and girder web adjacent to the hinge plates.

Bridge No.:	03311	**Inspected by:**	Suresh Dontula
Town:	Plainville, CT	**Inspected by:**	Amit KC
Feature Carried:	I-84 Westbound	**Date Inspected:**	April 22, 2014
Feature Crossed:	Route 72 WB, Rte. 372 & Pan Am RR	**Project No.:**	170-3224

Photo # 29: North side of Girder G1 hinge connection at Pier 3 in Span 4. Note the areas of rust with section loss in the girder web adjacent to the hinge plates.

Photo # 30: North side of Girder G2 hinge connection at Pier 3 in Span 4. Note the areas of rust with section loss in the fixed hinge plates and girder web adjacent to the hinge plates.

Bridge No.:	03311	**Inspected by:**	Suresh Dontula
Town:	Plainville, CT	**Inspected by:**	Amit KC
Feature Carried:	I-84 Westbound	**Date Inspected:**	April 22, 2014
Feature Crossed:	Route 72 WB, Rte. 372 & Pan Am RR	**Project No.:**	170-3224

Photo # 31: North face of Girder G1 at Pier 1 in Span 1. Note the areas of heavy rust with section loss in the web and bearing stiffeners.

Photo # 32: North face of Girder G1 at Pier 1 in Span 2. Note the areas of heavy rust with section loss in the web and section loss and rust hole in the bearing stiffener.

Bridge No.:	03311	**Inspected by:**	Suresh Dontula
Town:	Plainville, CT	**Inspected by:**	Amit KC
Feature Carried:	I-84 Westbound	**Date Inspected:**	April 22, 2014
Feature Crossed:	Route 72 WB, Rte. 372 & Pan Am RR	**Project No.:**	170-3224

Photo # 33: North face of Girder G1 at Pier 2 in Span 2. Note the areas of heavy rust with section loss in the bearing stiffeners.

Photo # 34: North face of Girder G1 at Pier 2 in Span 3 at the bottom. Note the areas of heavy rust with section loss in the web and section loss and rust hole in the bearing stiffener.

Bridge No.:	03311	**Inspected by:**	Suresh Dontula
Town:	Plainville, CT	**Inspected by:**	Amit KC
Feature Carried:	I-84 Westbound	**Date Inspected:**	April 22, 2014
Feature Crossed:	Route 72 WB, Rte. 372 & Pan Am RR	**Project No.:**	170-3224

Photo # 35: North face of Girder G1 at Pier 2 in Span 3 at the top. Note the areas of heavy rust with section loss in the web and section loss and rust hole in the bearing stiffener.

Photo # 36: Section loss in the bottom flange of Girder G1 in Span 3 between 2nd and 3rd cross frames from Pier 3 along the south side.

Bridge No.:	03311	**Inspected by:**	Suresh Dontula
Town:	Plainville, CT	**Inspected by:**	Amit KC
Feature Carried:	I-84 Westbound	**Date Inspected:**	April 22, 2014
Feature Crossed:	Route 72 WB, Rte. 372 & Pan Am RR	**Project No.:**	170-3224

Photo # 37: North face of Girder G1 at Pier 5 in Spans 5 and 6. Note the areas of heavy rust with section loss in the web and bearing stiffeners.

Photo # 38: Laminar rust with section loss in the bottom flange of Girder G1 in Span 5 near Pier 5 along the north side. Also, note the rust hole in the stiffener.

Bridge No.:	03311	**Inspected by:**	Suresh Dontula
Town:	Plainville, CT	**Inspected by:**	Amit KC
Feature Carried:	I-84 Westbound	**Date Inspected:**	April 22, 2014
Feature Crossed:	Route 72 WB, Rte. 372 & Pan Am RR	**Project No.:**	170-3224

Photo # 39: Missing weld between cross frame lower angle to stiffener connection on the south side of Girder G1 at Pier 2 in Span 2.

Photo # 40: Missing weld between cross frame top angle to stiffener connection on the north side of Girder G2 at Pier 2 in Span 2.

Bridge No.:	03311	**Inspected by:**	Suresh Dontula
Town:	Plainville, CT	**Inspected by:**	Amit KC
Feature Carried:	I-84 Westbound	**Date Inspected:**	April 22, 2014
Feature Crossed:	Route 72 WB, Rte. 372 & Pan Am RR	**Project No.:**	170-3224

Photo # 41: Cracked weld between cross frame lower angle to stiffener connection on the south side of Girder G2 at Pier 3 in Span 4.

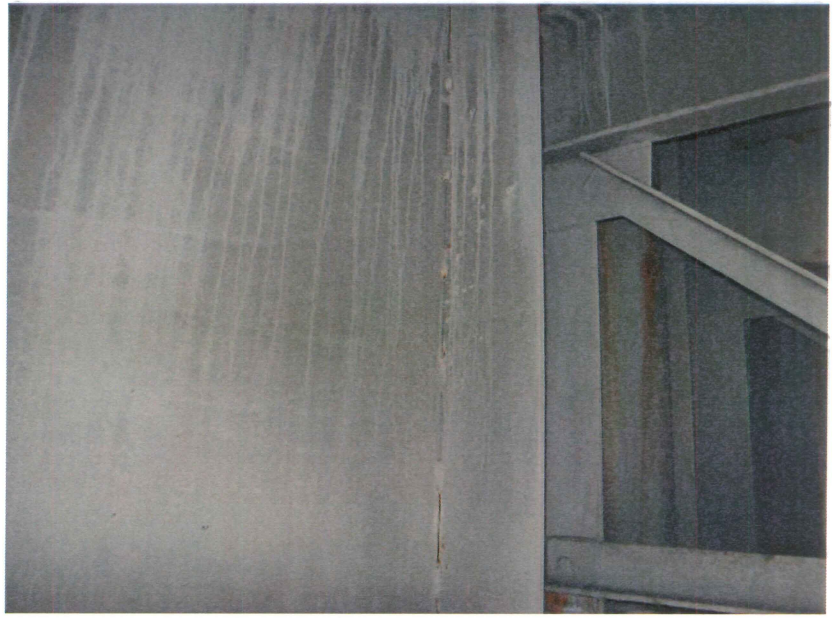

Photo # 42: Typical stitch welded stiffeners near the bearings. North side of Girder G5 at Pier 2 in Span 3 shown.

Bridge No.:	03311	**Inspected by:**	Suresh Dontula
Town:	Plainville, CT	**Inspected by:**	Amit KC
Feature Carried:	I-84 Westbound	**Date Inspected:**	April 22, 2014
Feature Crossed:	Route 72 WB, Rte. 372 & Pan Am RR	**Project No.:**	170-3224

Photo # 43: West Abutment elevation.

Photo # 44: Spall with exposed rebar in the West Abutment backwall behind Girder G1.

Bridge No.:	03311	**Inspected by:**	Suresh Dontula
Town:	Plainville, CT	**Inspected by:**	Amit KC
Feature Carried:	I-84 Westbound	**Date Inspected:**	April 22, 2014
Feature Crossed:	Route 72 WB, Rte. 372 & Pan Am RR	**Project No.:**	170-3224

Photo # 45: Spall and hollow area in the East Abutment backwall in Bay 6.

Photo # 46: Northwest Wingwall elevation. Note the erosion/undermining of the footing and vegetation growth on the wingwall.

Bridge No.:	03311	**Inspected by:**	Suresh Dontula
Town:	Plainville, CT	**Inspected by:**	Amit KC
Feature Carried:	I-84 Westbound	**Date Inspected:**	April 22, 2014
Feature Crossed:	Route 72 WB, Rte. 372 & Pan Am RR	**Project No.:**	170-3224

Photo # 47: Pier 5 east elevation (typical hammerhead pier).

Photo # 48: Pier 3 east elevation.

Bridge No.:	03311	**Inspected by:**	Suresh Dontula
Town:	Plainville, CT	**Inspected by:**	Amit KC
Feature Carried:	I-84 Westbound	**Date Inspected:**	April 22, 2014
Feature Crossed:	Route 72 WB, Rte. 372 & Pan Am RR	**Project No.:**	170-3224

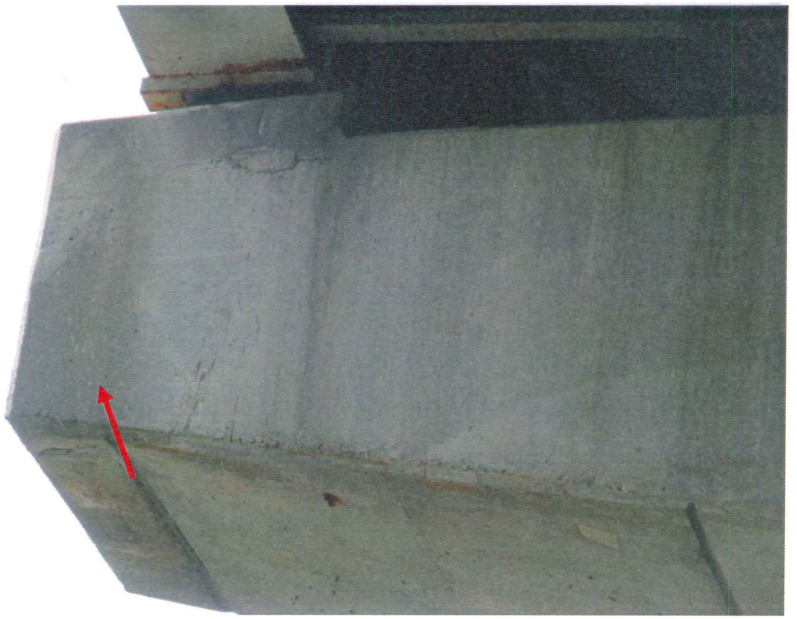

Photo # 49: East face of Pier 2 cap at the south end. There is a hollow area below Girder G7 over Rte. 72 WB right lane.

Photo # 50: North face of Pier 4 cap. Note the hollow area adjacent to Rte. 372 EB shoulder.

Bridge No.:	03311	**Inspected by:**	Suresh Dontula
Town:	Plainville, CT	**Inspected by:**	Amit KC
Feature Carried:	I-84 Westbound	**Date Inspected:**	April 22, 2014
Feature Crossed:	Route 72 WB, Rte. 372 & Pan Am RR	**Project No.:**	170-3224

Photo # 51: East face of Pier 4 cap at the north end. Note the hollow area below Girder G1 with map cracking and efflorescence adjacent to Rte. 372 EB shoulder.

Photo # 52: Areas of erosion in embankment in front of the East Abutment.

Bridge No.:	03311	**Inspected by:**	Suresh Dontula
Town:	Plainville, CT	**Inspected by:**	Amit KC
Feature Carried:	I-84 Westbound	**Date Inspected:**	April 22, 2014
Feature Crossed:	Route 72 WB, Rte. 372 & Pan Am RR	**Project No.:**	170-3224

Photo # 53: Heavy accumulation of debris on top of Pier 5 cap around the bearings.

Photo # 54: Southeast approach guide rail. Note the areas of minor collision damage.

Bridge No.:	03311	**Inspected by:**	Suresh Dontula
Town:	Plainville, CT	**Inspected by:**	Amit KC
Feature Carried:	I-84 Westbound	**Date Inspected:**	April 22, 2014
Feature Crossed:	Route 72 WB, Rte. 372 & Pan Am RR	**Project No.:**	170-3224

Photo # 55: Northeast approach guide rail transition. Note the gap between the railing and parapet.

Photo # 56: East approach pavement. Note the longitudinal, transverse cracks and paving seam open up to 1" wide.

Your Agency Name

Your Office Name
Your Department Name

Structure Inventory and Appraisal Sheet (English Units)

Bridge Key: 03311 Agency ID: 03311 SR: 62.6 SD/FO: SD

IDENTIFICATION

State 1:	09 Connecticut	Struc Num 8:	03311
Facility Carried 7:	INTERSTATE-84 WB	Location 9:	I-84/RT 72 INTERCHANGE 11
Rte.(On/Under) 5A:	Route On Structure	Rte. Signing Prefix 5B:	1 Interstate Hwy
Level of Service 5C:	1 Mainline	Route Number 5D:	00084
Directional Suffix 5E:	4 West	% Responsibility:	0.00
SHD District 2:	01	County Code 3:	Hartford
Place Code 4:	PLAINVILLE	Mile Post 11:	50.199 mi
Feature Intersected 6:	RT 72 NB, RR & RT 372		
Latitude 16:	41° 14' 12"	Longitude 17	072° 49' 30"
Border Bridge Code 98	Unknown (P)		
Border Bridge Number 99	NA		

INSPECTION

Frequency 91:	24 months	Inspection Date 90:	4/22/2014	Next Inspection:	4/22/2016
FC Frequency 92A:	24 months	FC Inspection Date 93A:	4/22/2014	Next FC Inspection:	4/22/2016
UW Frequency 92B:	NA	UW Inspection Date 93B:	NA	Next UW Inspection	NA
SI Frequency 92C:	24 months	SI Date 93C:	4/22/2014	Next SI:	4/22/2016
Element Frequency:	24 months	Element Insp. Date:	4/22/2014	Next Elem. Insp.:	4/22/2016

CLASSIFICATION

Defense Highway 100:	1 STRAHNET hwy	Parallel Structure 101:	Left of || bridge
Direction of Traffic 102:	1 1-way traffic	Temporary Structure 103:	Unknown (NBI)
Highway System 104:	1 On the NHS	NBIS Length 112:	Long Enough
Toll Facility 20:	3 On free road	Functional Class 26:	11 Urban Interstate
Defense Hwy 110:	1 STRAHNET hwy	Historical Significance 37	5 Not eligible for NRHP
Owner 22:	01 State Highway Agency		
Custodian 21:	01 State Highway Agency		

STRUCTURE TYPE AND MATERIALS

Number of Approach Spans 46 0 Number of Spans Main Unit 45: 6

3 Steel

Deck Type 107:	1 Concrete-Cast-in-Place
Wearing Surface 108A:	6 Bituminous
Membrane 108B:	2 Preformed Fabric
Deck protection 108C	None

CONDITION

Deck 58:	6 Satisfactory	Super 59:	4 Poor	Sub 60:	5 Fair
Culvert 62:	N N/A (NBI)	Channel/Channel Protection 61:	N N/A (NBI)		

AGE AND SERVICE

Year Built 27:	1969	Year Reconstructed 106:	-1
Type of Service on 42A	1 Highway		
Type of Service under 42B	8 Hwy-waterway-RR		
Lanes on 28A: 3	Lanes under 28B: 4	Detour Length 19:	1.2 mi
ADT 29: 37,400	Truck ADT 109: 14%	Year of ADT 30:	2013

LOAD RATING AND POSTING

Inventory Rating Method 65:	1 LF Load Factor	Operating Rating Method 63:	1 LF Load Factor
Inventory Rating 66:	HS28.7	Operating Rating 64:	HS47.9
Design Load 31:	5 MS 18 (HS 20)	Posting 70:	5 At/Above Legal Loads
Posting Status 41:	A Open, no restriction		

GEOMETRIC DATA

Length Max Span 48:	108.92 ft	Structure Length 49:	663.06 ft
Curb/Sdwlk Width L 50A	0.00 ft	Curb/Sidewalk Width R 50B	0.66 ft
Width Curb to Curb 51:	51.84 ft	Width Out to Out 52:	55.45 ft
Approach Roadway width 32: (w/ shoulders)	50.85 ft	Median 33:	1 Open median
Deck Area: 36,789.00 sq. ft			
Skew 34: 0.00°		Structure Flared 35	0 No flare
Vertical Clearance 10	328.05 ft	Horizontal Clearance 47:	51.84 ft
Minimum Vertical Clearance Over Bridge 53:		328.05 ft	
Minimum Vertical Underclearance Reference 54A		H Hwy beneath struct	
Minimum Vertical Underclearance 54B:		16.01 ft	
Minimum Lateral Underclearance Reference R 55A:		H Hwy beneath struct	
Minimum Lateral Underclearance R 55:		13.40 ft	
Minimum Lateral Underclearance L 56:		7.00 ft	

APPRAISAL

Bridge Rail 36A:	1 Meets Standards	Approach Rail 36C:	1 Meets Standards
Transition 36B:	1 Meets Standards	Approach Rail Ends 36D:	1 Meets Standards
Str Evaluation 67:	4 Minimum Tolerable	Deck Geometry 68:	5 Above Tolerable
Underclearance, Vertical and Horizontal 69:		5 Above Tolerable	
Waterway Adequacy 71:	N Not applicable	Approach Alignment 72:	5 Above Tolerable
Scour Critical 113:	N Not Over Waterway		

PROPOSED IMPROVEMENTS

Bridge Cost 94:	$1,000	Type of Work 75:	38 Other Structural
Roadway Cost 95:	$1,000	Length of Improvement 76	0.3 ft
Total Cost 96:	$2,000	Future ADT 114:	18,600
Year of Cost Estimate 97	2000	Year of Future ADT 115:	2029

NAVIGATION DATA

Navigation Control 38	Permit Not Required		
Vertical Clearance 39	0.0 ft	Horizontal Clearance 40:	0.0 ft
Pier Protection 111:	Unknown (NBI)	Lift Bridge Vertical Clearance 116	0.0 ft

Structure Inventory and Appraisal Sheet (English Units)

ELEMENT CONDITION STATE DATA

Str Unit	Elm/Env	Description	Units	Total Qty	% in 1	Qty. St. 1	% in 2	Qty. St. 2	% in 3	Qty. St. 3	% in 4	Qty. St. 4	% in 5	Qty. St. 5
0	14/3	P Conc Deck/AC Ovly	(SF)	36,789	0%	0	100%	36,789	0%	0	0%	0	0%	O
0	107/3	Paint Stl Opn Girder	(LF)	4,357	20%	857	23%	1,000	23%	1,000	23%	1,000	11%	500
0	161/3	Paint Stl Pin/Hanger	(EA)	14	0%	0	100%	14	0%	0	0%	0	0%	O
0	205/3	R/Conc Column	(EA)	6	83%	5	17%	1	0%	0	0%	0	0%	O
0	215/3	R/Conc Abutment	(LF)	111	32%	36	68%	75	0%	0	0%	0	0%	O
0	231/3	Paint Stl Cap	(LF)	56	79%	44	18%	10	4%	2	0%	0	0%	O
0	233/3	P/S Conc Cap	(LF)	215	42%	90	35%	75	23%	50	0%	0	0%	O
0	305/3	Asphaltic Plug Joint	(LF)	415	96%	400	4%	15	0%	0	0%	0	0%	O
0	311/3	Moveable Bearing	(EA)	1	100%	1	0%	0	0%	0	0%	0	0%	O
0	313/3	Fixed Bearing	(EA)	29	100%	29	0%	0	0%	0	0%	0	0%	O
0	314/3	Pot Bearing	(EA)	42	80%	34	20%	8	0%	0	0%	0	0%	O
0	321/3	R/Conc Approach Slab	(EA)	2	100%	2	0%	0	0%	0	0%	0	0%	O
0	331/3	Conc Bridge Railing	(LF)	1,332	100%	1,332	0%	0	0%	0	0%	0	0%	O
0	356/3	Steel Fatigue SmFlag	(EA)	1	100%	1	0%	0	0%	0	0%	0	0%	O
0	357/3	Pack Rust Smart Flag	(EA)	1	0%	0	100%	1	0%	0	0%	0	0%	O
0	359/3	Soffit Smart Flag	(EA)	1	0%	0	100%	1	0%	0	0%	0	0%	O
0	363/3	Section Loss SmFlag	(EA)	1	0%	0	100%	1	0%	0	0%	0	0%	O
0	371/3	Free Fall Pipes, Scu	(EA)	2	100%	2	0%	0	0%	0	0%	0	0%	O

ADDITIONAL FIELD NOTES

AND

BACK-UP MATERIALS

HINGE DATA SHEET

Form BRI-30, Rev. 9/97

Measurements Taken By: MJU/PB Date: 4/16/12

Bridge No.: 33 11 184 WB / RT 372, 72 WB, RR

Town: PLAINVILLE

Date:

Hinge Located: SP # 3 @ PIER 3

Effective span for Movement: 0 (ft)

Page: of

Beam No.	V (in)	J (in)	R (in)	L (in)	Secondary System Type	Gap[1] (Y/N)	Nut Restraint System	Comments
1	12 5/8"	16 9/16"	1 3/8"	1 1/16"	NONE	N/A	COTTER PIN	① = 3/4" @ SOUTH WORST (LESS @ N.)
2	13 3/16"	16 13/16"	1 1/16"	1 1/16"				① = ±3/8" @ BOTH SIDES ; NUT W/ ±16° ROTATION BASED ON PRINT (NO CHANGE)
3	13 3/4"	16 7/8"	1 3/16"	~~7/8"~~ 13/16"				① = 1/2 ± @ SOUTH (MAX)
4	13 3/4	16 7/8"	1 3/16	~~7/8"~~ 13/16"				—
5	13 ~~3/4~~ 7/8	17"	1"	7/8"				① - UP TO 3/8"
6	13 1/8"	17 1/16"	1 1/8"	~~7/8"~~ 13/16"				ABRASION RUST @ NUTS + ALSO @ JCT OF WEB + N. HINGE PL ; ±3/8" GAP B/W WEB + S. HINGE PL
7	12 ~~1/2~~ 9/16	16 15/16"	3/4"	1"				① UP TO 1/8"
8								
9								
10								

Notes:

1) For Hinge assemblies with a redundant support system, indicate if there is a gap between the redundant system (bearing) and the bottom flange of the suspended girder.

2) All measurements are taken in reference to log direction.

V : Vertical misalignment of girders @ left edge of girder's bottom flange.

J : Joint opening between webs, measured just above the bottom flange fillet, on the left face of the girder's web.

3) Use a permanent marker to indicate locations of field measurements.

① = IR B/W HANGER PL'S + HINGE (WORST NOTED)

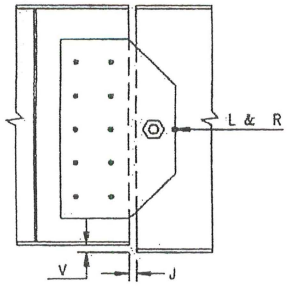

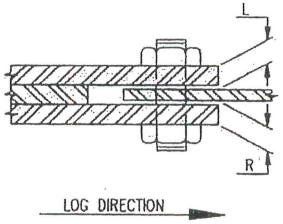

31/42

File: Hng_form.xls(Data1), Printed: 9/24/01

mbl remained

HINGE DATA SHEET

Form BRI-30, Rev. 9/97

Measurements Taken By: MJO/PB Date: 4/18/12

Bridge No.: 3311 I-84 W/B / RT 372 72WB, RR Town: PLAINVILLE Date:

Hinge Located: SP #4 @ PIER 3 Effective span for Movement: 0 (ft) Page: of

Beam No.	V (in)	L/R J (2) (in)	R (in)	L (in)	Secondary System Type	Gap[1] (Y/N)	Nut Restraint System	Comments
1	14 1/2" *	16 5/8 | 17 1/16	1 1/4" *	1 1/8"	NONE	N/A	COTTER PIN	(1) 5/8"
2	15 1/16"	16 11/16 | 17 1/16	15/16"	X" 1 1/16"				(1) UP TO 3/16"
3	15 1/2"	16 5/8 | 16 7/8	7/8	1"				(1) = 1/8"
4	15 9/16" 3/4	16 9/16 | 16 15/16	1 1/8"	3/4"				(1) = 3/8"
5	15 1/2"	16 9/16 | 17 1/16	1"	15/16"				(1) = 1/8"
6	15 X 8/16	16 13/16 | 17 3/16	1"	7/8				–
7	14 3/8"	16 5/16 | 16 9/16	15/16	13/16"				–
8								
9								* CHANGE IN MEASUREMENT DUE TO IMPACT RUST
10								

Notes:

1) For Hinge assemblies with a redundant support system, indicate if there is a gap between the redundant system (bearing) and the bottom flange of the suspended girder.

2) All measurements are taken in reference to log direction.

- **V** : Vertical misalignment of girders @ left edge of girder's bottom flange.
- **J** : Joint opening between webs, measured just above the bottom flange fillet, on the left face of the girder's web.

3) Use a permanent marker to indicate locations of field measurements.

(1) = IR B/W HANGER PL'S & WEB (WORST NOTED)

(2) - "J" MEAS TAKEN @ RT & LT SIDES OF BM DUE TO INCONSISTENCIES W/ PREV MEASUREMENTS

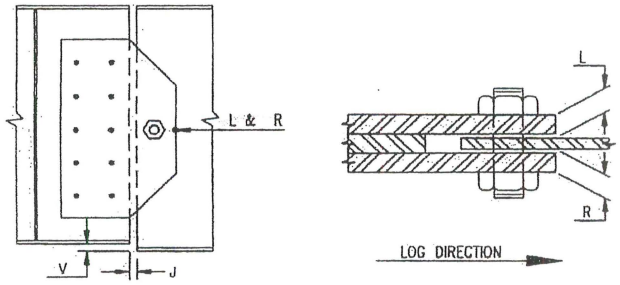

File: Hng_form.xls(Data1), Printed: 9/24/01

35/36

GM2	FIELD NOTES	JOB NO. 170-3224	BRIDGE NO. 0331
		DATE: 7/9/14	SHEET —
		CREW: SRD, AKC, BJS	

CROSS FRAME WELD CRACK SCHEDULE

Span	Girder	Cross Frame No.	Cracked/Broken/Missing Weld at Cross Frame	Other Comments
1	1	3	Yes	
1	2	3, 4	Yes	Total 3 welds deteriorated at these two cross frames.
1	3	4	Yes	
1	4	4	Yes	
1	5	3	Yes	
1	6	2, 3	Yes	
1	7	4	Yes	2" of 5" weld is missing & rest is crcaked/broken.
2	1	Pier 2 Cross Frame	Yes	
2	2	3	Yes	
2	2	Pier 2 Cross Frame	Yes	2 Welds missing
2	3	1	Yes	1" cracked weld.
2	4	3, 4	Yes	
2	5	3, 4	Yes	
2	6	3	Yes	
2	7	Pier 1 Cross Frame	Yes	
2	Bay 2	Pier 2 Cross Frame	Yes	Cross frame diagonal angle with missng welds
3	1	Pier 3 Cross Frame	Yes	
3	2	Pier 3 Cross Frame	Yes	
3	3	Pier 3 Cross Frame	Yes	On both sides.
3	4	Pier 3 Cross Frame	Yes	
3	5	Pier 3 Cross Frame	Yes	
3	6	Pier 2 Cross Frame	Yes	
4	2	Pier 3 Cross Frame	Yes	
4	3	Pier 4 Cross Frame	Yes	
4	6	Pier 3 Cross Frame	Yes	
5	1	Pier 4 Cross Frame	Yes	
5	4	Pier 4 Cross Frame	Yes	
6	5	4	Yes	

Above cracks are typically located at lower angle of the cross frame to siffener connection.
Erection bolts are in place. There is typically one weld per location, unless noted in the comments above.

REVISION 1	DATE	CREW	REVISION 3	DATE	CREW
REVISION 2	DATE	CREW	REVISION 4	DATE	CREW