ONLY STANDARD SHEETS MARKED WITH AN "✓" ARE IN THIS PROJECT # 109-172

	SHEET NO.	TITLE	APPROVAL DATE
	TR-1000_01	GENERAL CLAUSES (TEST PROCEDURES)	1/2014
	TR-1001_01	TRENCHING & BACKFILLING, ELECTRICAL CONDUIT	4/2012
	TR-1002_01	TRAFFIC CONTROL FOUNDATIONS	1/2014
	TR-1010_01	CONCRETE HANDHOLE	4/2014
	TR-1102_01	PEDESTALS, PEDESTRIAN SIGNALS	4/2012
	TR-1105_01	TRAFFIC SIGNALS AND CABLE ASSIGNMENTS	5/2015
	TR-1107_01	PEDESTRIAN PUSH BUTTON	4/2014
	TR-1108_01	CONTROLLERS	5/2013
	TR-1111_01	LOOP VEHICLE DETECTOR AND SAWCUT	4/2014
	TR-1113_01	CONTROL CABLE	4/2014
	TR-1114_01	BONDING & UTILITY POLE ATTACHMENT DETAILS, SIGN HANGER, "Y" CLAMP DETAILS	5/2015

	SHEET NO.	TITLE	APPROVAL DATE
✓	TR-1205_01	DELINEATION, DELINEATOR AND OBJECT MARKER DETAILS [7]	2/2011
✓	TR-1208_01	SIGN SUPPORT AND SIGN PLACEMENT DETAILS, GORE EXIT SIGN [8]	2/2011
✓	TR-1208_02	METAL SIGN POSTS AND SIGN MOUNTING DETAILS [9]	2/2011
✓	TR-1210_01	PAVEMENT MARKINGS (DURABLE MARKINGS) FOR DIVIDED HIGHWAYS [21A]	12/2013
✓	TR-1210_02	PAVEMENT MARKINGS (DURABLE MARKINGS) FOR DIVIDED HIGHWAYS [22A]	12/2013
✓	TR-1210_03	SPECIAL DETAILS & TYPICAL PAVEMENT MARKINGS FOR TWO-WAY HIGHWAYS [25]	11/2014
✓	TR-1220_01	SIGNS FOR CONSTRUCTION AND PERMIT OPERATIONS [23]	6/2012
✓	TR-1220_02	CONSTRUCTION SIGN SUPPORTS AND CHANNELIZING DEVICES [23A]	2/2011

STANDARD SHEETS SHALL BE USED WITH STANDARD SPECIFICATIONS

REV.	DATE	REVISION DESCRIPTION
3	4-2014	REMOVED TR-1111_02.
2	1-2014	REMOVED TR-1103_01.
1	4-2012	RENUMBERED TR-1107_02 TO TR-1114_01. REMOVED TR-1116_01.

THE INFORMATION, INCLUDING ESTIMATED QUANTITIES OF WORK, SHOWN ON THESE SHEETS IS BASED ON LIMITED INVESTIGATIONS BY THE STATE AND IS IN NO WAY WARRANTED TO INDICATE THE CONDITIONS OF ACTUAL QUANTITIES OF WORK WHICH WILL BE REQUIRED.

Plotted Date: 4/11/2014

NOT TO SCALE

STATE OF CONNECTICUT
DEPARTMENT OF TRANSPORTATION

Filename: CTDOT_TRAFFIC_STD.DGN Model: TR-01-STD_INDEX

SUBMITTED BY: NAME/DATE/TIME:
Andrew Lessard
2015.07.15
14:47:03-04'00'

CTDOT STANDARD SHEET

OFFICE OF ENGINEERING

STANDARD SHEET TITLE:

TRAFFIC STANDARD SHEET INDEX

STANDARD SHEET NO.:

TR-STD_INDEX

DELINEATORS DE-1, DE-2, DE-3

INSTALLATION ON DELINEATOR POSTS

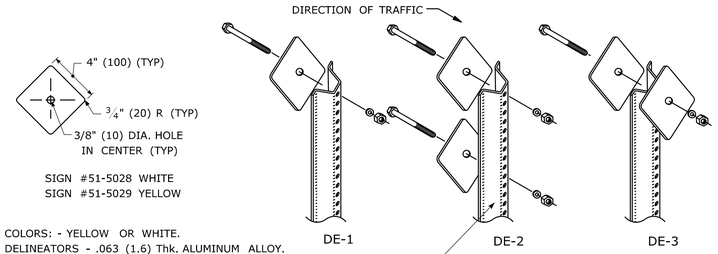

SIGN #51-5028 WHITE
SIGN #51-5029 YELLOW

COLORS: - YELLOW OR WHITE.
DELINEATORS - .063 (1.6) Thk. ALUMINUM ALLOY.
FACE SHALL BE PRESSURE SENSITIVE, SELF ADHERING, TYPE IV OR BRIGHT WIDE ANGLE RETROREFLECTIVE SHEETING.
DELINEATORS SHALL BE FASTENED WITH 5/16" (8) STAINLESS STEEL ASTM A-193 CLASS 1, GRADE B8 (TYPE 304) OR BETTER HEX HEAD BOLT (LENGTH AS REQUIRED), WASHER AND FIBER INSERT SELF LOCKING NUT, ON STANDARD METAL DELINEATOR POST.

INSTALLATION ON PERMANENT CONCRETE BARRIER, BRIDGE PARAPETS & RETAINING WALLS

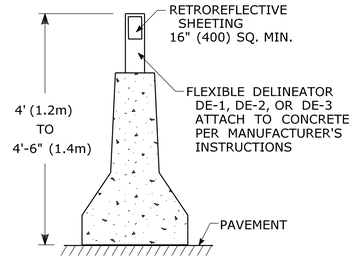

DELINEATORS DE-1, DE-2, DE-3 TO BE PAID FOR UNDER SECTION 12.05 DELINEATORS.

DELINEATORS DE-4, DE-4A, DE-5
FOR INSTALLATION ON METAL BRIDGE RAIL

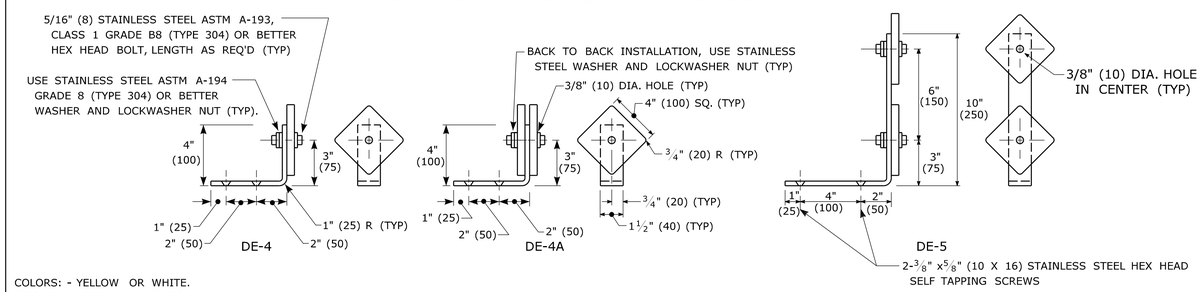

COLORS: - YELLOW OR WHITE.
DELINEATORS - .063 (1.6) Thk. ALUMINUM ALLOY.
BRACKET - .125 (3.2) Thk. ALUMINUM ALLOY, AND SHALL CONFORM TO SPECIFICATION M.18.07-03 BRIDGE RAIL MOUNTING BRACKETS.
FACE SHALL BE PRESSURE SENSITIVE, SELF ADHERING, TYPE IV OR BRIGHT WIDE ANGLE RETROREFLECTIVE SHEETING.
USE STAINLESS STEEL WASHERS ON FACE OF DELINEATORS, 5/8 " (16) O.D. X 3/8 " (10) I.D. X .032 (0.8) Thk. (TYPICAL).

DELINEATORS TYPE DE-4, DE-4A, AND DE-5 TO BE PAID FOR UNDER SECTION 12.05 DELINEATORS.

TYPICAL MAINLINE & INTERCHANGE DELINEATION

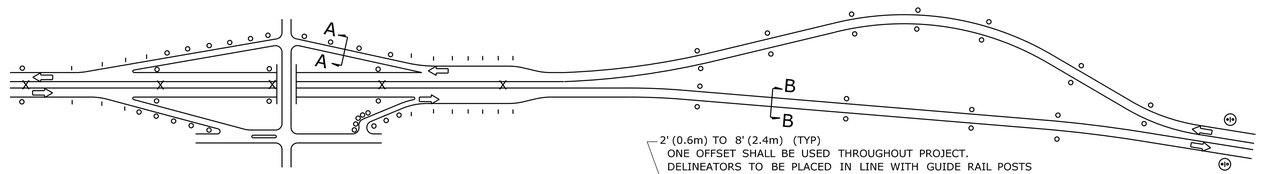

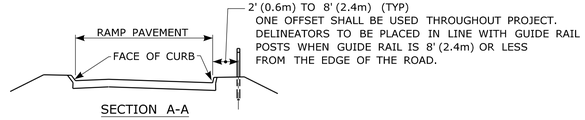

SECTION A-A
DELINEATOR PLACEMENT ON RAMPS
ON TANGENT SECTIONS - RIGHT SIDE OF RAMP
ON CURVED SECTIONS - BOTH SIDES OF CURVE

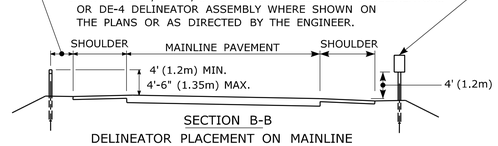

SECTION B-B
DELINEATOR PLACEMENT ON MAINLINE

DELINEATOR SPACING NOTES:

1) AT LOCATIONS WHERE THE MEDIAN WIDTH (BETWEEN SHOULDERS) IS 12' (3.6m) OR LESS, AND MEDIAN BEAM RAIL IS PRESENT, TYPE DE-3 DELINEATORS SHALL BE MOUNTED WITHIN THE MEDIAN BEAM RAIL..
2) SPACING ON MAINLINE EXPRESSWAY TANGENTS SHALL BE 400' (120m).
3) SPACING ON MAINLINE EXPRESSWAY CURVES SHALL BE AS SPECIFIED IN TABLE 3D-1 OF THE MUTCD.
4) ON ACCELERATION AND DECELERATION LANES AND ON-RAMP TANGENT SECTIONS, DELINEATOR SPACING SHALL BE 100' (30m).
5) ON CURVED PORTIONS OF RAMPS, DELINEATOR SPACING SHALL BE IN ACCORDANCE WITH TABLE 3D-1 OF THE MUTCD, BUT NOT TO EXCEED 100' (30m).

LEGEND:

- o DE-1 DELINEATORS OR DE-4 DELINEATOR ASSEMBLY
- | DE-2 DELINEATORS OR DE-5 DELINEATOR ASSEMBLY
- X DE-3 DELINEATORS ASSEMBLY OR DE-4A DELINEATOR
- (D1) D10-1, 2, OR 3 ASSEMBLY TO BE INSTALLED WHERE SHOWN ON PLANS OR AS DIRECTED BY THE ENGINEER.

COLOR APPLICATION, FOR DE-1 THRU DE-5

LEFT SIDE OF ALL ROADWAYS AND RAMPS - YELLOW
RIGHT SIDE OF ALL ROADWAYS AND RAMPS - WHITE

MUTCD TABLE 3D-1
APPROXIMATE SPACING FOR DELINEATORS ON HORIZONTAL CURVES

RADIUS (R) OF CURVE (feet)	APPROXIMATE SPACING (S) ON CURVE (feet)	RADIUS (R) OF CURVE (m)	APPROXIMATE SPACING (S) ON CURVE (m)
50	20	15	6
115	25	35	8
180	35	55	11
250	40	75	13
300	50	95	15
400	55	125	18
500	65	155	20
600	70	185	22
700	75	215	24
800	80	245	26
900	85	275	27
1,000	90	305	29

DISTANCE IN FEET (m) WERE ROUNDED TO THE NEAREST 5 FEET (1.5m) SPACING FOR SPECIFIC RADII MAY BE INTERPOLATED FROM TABLE. THE MINIMUM SPACING SHOULD BE 20 FT (6.1m) THE SPACING ON CURVES SHOULD NOT EXCEED 300 FT (90 m). IN ADVANCE OF OR BEYOND A CURVE AND PROCEEDING AWAY FROM THE END OF THE CURVE, THE SPACING OF THE FIRST DELINEATOR IS 2S. THE SECOND IS 3S, AND THE THIRD 6S BUT NOT TO EXCEED 300 FT (90m)
S REFERS TO THE DELINEATOR SPACING FOR SPECIFIC RADII COMPUTED FROM THE FORMULA: $S=3\sqrt{R-50}$ $(S=1.7\sqrt{R-15})$.

DELINEATORS DE-7, DE-7A, DE-7B, DE-7C
FOR INSTALLATION ON TEMPORARY PRECAST CONCRETE BARRIER CURB AND TEMPORARY PRECAST CONCRETE BARRIER CURB (STRUCTURE)

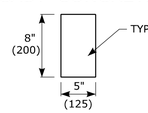

DE-7 ONE WAY WHITE
DE-7A ONE WAY YELLOW
DE-7B TWO WAY YELLOW
DE-7C WHITE/YELLOW BACK TO BACK
TEMPORARY PRECAST CONCRETE BARRIER DELINEATORS ARE TO BE FABRICATED OF ALUMINUM, STEEL, PLASTIC, OR OF A MATERIAL APPROVED BY THE ENGINEER AND MOUNTED IN THE CENTER OF EACH SECTION OF TEMPORARY BARRIER AS REQUIRED AND PER MANUFACTURER'S INSTRUCTIONS.

SPACING FOR TEMPORARY BARRIER CURB DELINEATORS:

ON THE LEADING TAPERED SECTION - EVERY 20' (6.2m),
ON THE FIRST 100' (30m) OF THE PARALLEL SECTION - EVERY 20' (6.2m),
ON THE REMAINING LENGTH - EVERY 100' (30m), MINIMUM OF 2 IF LESS THAN 100' (30m),
ALTERNATING ONE WAY TRAFFIC - EVERY 20' (6.2m),
ALL OTHER ROADWAYS SHALL BE DELINEATED IN ACCORDANCE WITH MUTCD.

DELINEATORS DE-7, DE-7A, DE-7B, DE-7C TO BE PAID FOR UNDER SECTION 12.05 DELINEATORS.

DELINEATORS D10-1, D10-2, D10-3
MILE POST MARKER ASSEMBLY

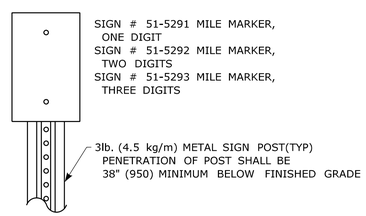

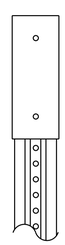

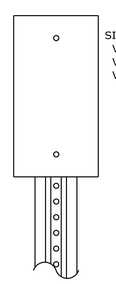

MILE POST MARKER ASSEMBLY TO BE PAID FOR UNDER SECTION 12.08 SIGN FACE SHEET ALUMINUM

ATTENUATOR REFLECTOR
SIGN # 50-5032

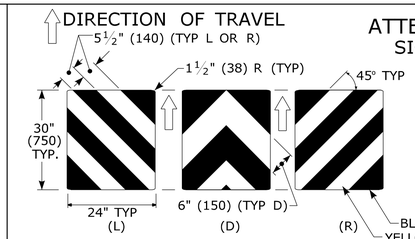

THIS SHEETING TO BE INSTALLED ON THE NOSE OF THE IMPACT ATTENUATOR WITH ADHESIVE IN ACCORDANCE WITH THE MANUFACTURER'S RECOMMENDATIONS.
THE SHEETING SHALL COVER THE NOSE OF THE IMPACT ATTENUATOR.
ON A CURVED NOSE, THE WIDTH OF THE SHEETING SHALL EXTEND 1" (25) BEYOND THE POINT OF CURVATURE ON EACH SIDE OF THE NOSE.
THE HEIGHT AND WIDTH OF THE SHEETING VARIES DEPENDING ON THE SIZE OF THE NOSE OF THE IMPACT ATTENUATOR.

ATTENUATOR REFLECTOR TO BE PAID FOR UNDER SECTION 18.0 IMPACT ATTENUATOR

DELINEATOR DE-9
TYPE I OBJECT MARKER
SIGN # 51-5031

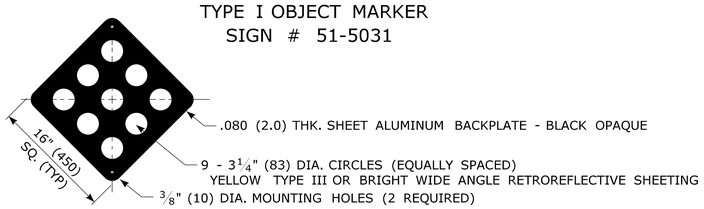

WHEN ERECTED AS A SEPARATE INSTALLATION A 3lb. (4.5kg/m) METAL SIGN POST SHALL BE USED. THE BOTTOM OF THE DE-9 SHALL BE 4' (1.2m) ABOVE THE ADJACENT PAVEMENT AND THE PENETRATION OF THE POST SHALL BE 38" (950 mm) MINIMUM BELOW THE FINISHED GRADE.

DELINEATORS DE-9 TO BE PAID FOR UNDER SECTION 12.05 DELINEATORS.

TYPE 3 OBJECT MARKERS
SIGN # 51-5023

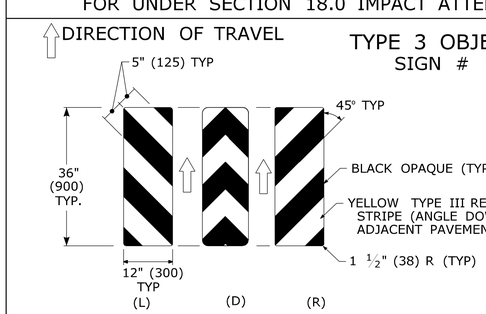

SIGN #51-5023 MARKER MOUNTED ON 3lb. (4.5kg/m) METAL SIGN POST

BOTTOM OF SIGN #51-5023 TO BE 4' (1.2m) ABOVE ADJACENT EDGE OF PAVEMENT

FINAL LOCATIONS OF SIGN #51-5023 MARKERS WILL BE AS SHOWN ON THE PLAN OR AS DIRECTED BY THE ENGINEER.

TYPE 3 OBJECT MARKER TO BE PAID FOR UNDER SECTION 12.08 SIGN FACE SHEET ALUMINUM

REV.	DATE	REVISION DESCRIPTION
2	2-2011	MINOR REVISIONS.
1	1-2010	INCLUDED DETAILS IN D10-1, D10-2, D10-3 DELINEATORS.

THE INFORMATION, INCLUDING ESTIMATED QUANTITIES OF WORK, SHOWN ON THESE SHEETS IS BASED ON LIMITED INVESTIGATIONS BY THE STATE AND IS IN NO WAY WARRANTED TO INDICATE THE CONDITIONS OF ACTUAL QUANTITIES OF WORK WHICH WILL BE REQUIRED.

Plotted Date: 3/22/2011

DIMENSIONS ARE IN ENGLISH (".") & METRIC UNITS (mm). METRIC DIMENSIONS ARE ROUNDED:
- OVER 1" TO NEAREST 5 mm
- UNDER 1" TO NEAREST 1 mm.

NOT TO SCALE

STATE OF CONNECTICUT
DEPARTMENT OF TRANSPORTATION

Filename: CTDOT_TRAFFIC_STD.dgn Model: TR-1205_01

SUBMITTED BY: NAME/DATE/TIME:
Charles S. Harlow 2011.03.22 13:18:08 -04'00'
Joseph C. Cancelliere 2011.03.24 08:23:40 -04'00'
APPROVED BY: NAME/DATE/TIME:
John F. Carey 2011.03.24 09:51:45 -04'00'

CTDOT STANDARD SHEET
OFFICE OF ENGINEERING

STANDARD SHEET TITLE:
DELINEATION, DELINEATORS AND OBJECT MARKER DETAILS

STANDARD SHEET NO.:
TR-1205_01

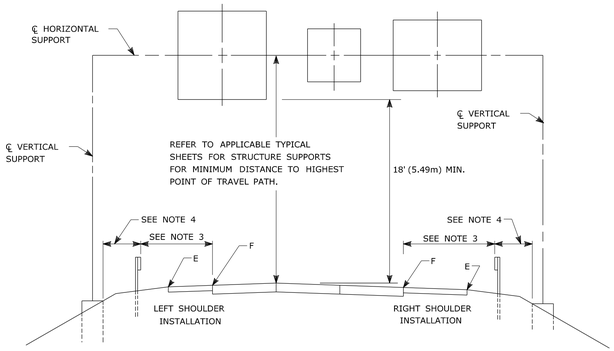

GUIDE RAIL PLACEMENT FOR SIGN SUPPORTS

NOTES:

1) FOR PLACEMENT OF CANTILEVER SIGN SUPPORT USE APPLICABLE PORTION OF ABOVE DETAIL.
2) BARRIER SYSTEM IS REQUIRED FOR BOTH SIDES OF MEDIAN SUPPORTS IN NARROW MEDIANS.
3) AT LOCATIONS WHERE IMPACT PROTECTION IS NOT REQUIRED FOR ROADSIDE ELEMENTS, FACE OF GUIDE RAIL SHALL BE PLACED 30' (9.1m) FROM EDGE OF TRAVELWAY.
4) OFFSETS OF FOUNDATIONS FROM BARRIER SYSTEMS SHALL BE AS SHOWN ELSEWHERE ON THE CONTRACT PLANS.
5) ALL SIGNS ARE TO BE HORIZONTAL, REGARDLESS OF CAMBER IN SUPPORT.

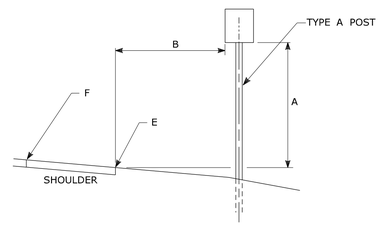

TYPICAL REGULATORY & WARNING SIGN PLACEMENT

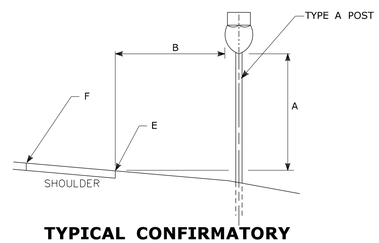

TYPICAL CONFIRMATORY ROUTE MARKER PLACEMENT

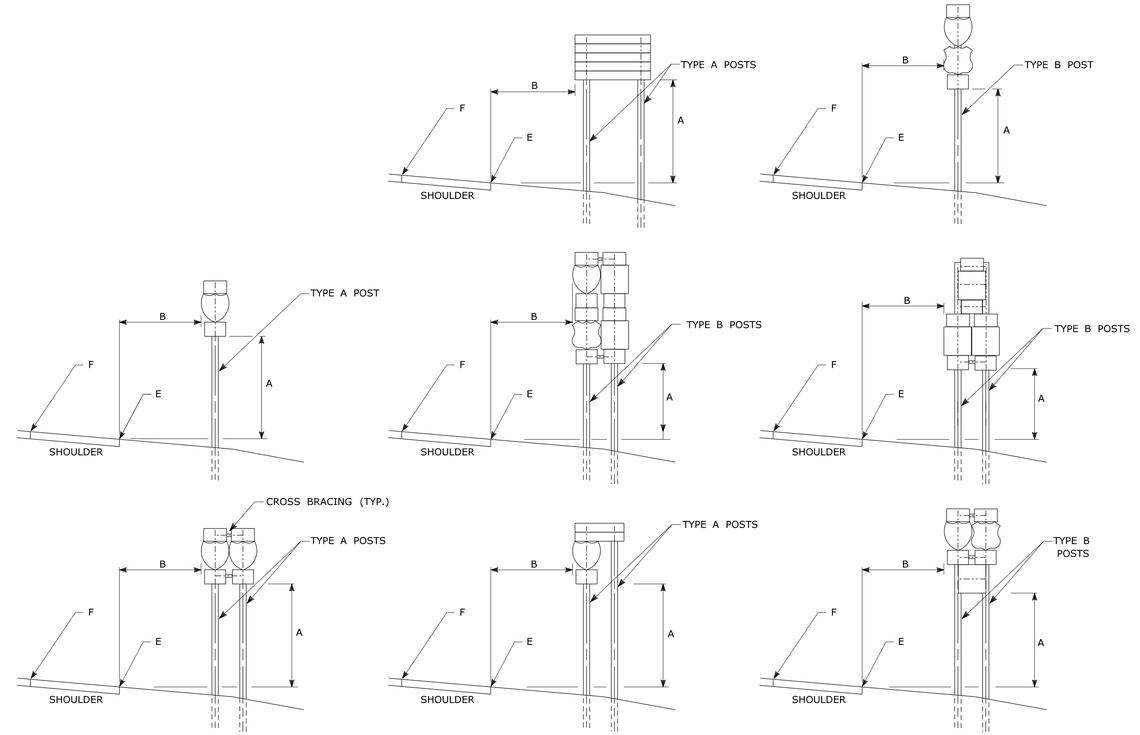

TYPICAL SIGN PLACEMENT AND POST SELECTION

NOTES:

ALL SIGNS AND SHIELDS ON DIRECTIONAL ASSEMBLIES SHALL ABUT VERTICALLY

2 POST ASSEMBLIES SHALL BE PROVIDED WITH 3" X ¼" (75 X 6) GALVANIZED STEEL BAR CROSS BRACING.

REFER TO TRAFFIC TYPICAL SHEET "TYPICAL METAL SIGN POSTS AND SIGN MOUNTING DETAILS" FOR SIGN POSTS.

DIM."A"	DIM."B" △1	ASSEMBLY LOCATION
7' (2.1m)	6' (1.8m) 12' (3.6m) △2	RURAL DISTRICTS & EXPRESSWAYS
7' (2.1m)	2' (0.6m)	BUSINESS & RESIDENTIAL DISTRICTS WHERE PARKING OR OTHER OBSTRUCTIONS LIMIT VISIBILITY
8'-6" (2.6m)	1' (0.3m)	SIDEWALKS △3

△1 OR AS DIRECTED BY THE ENGINEER

△2 6' FROM EDGE OF SHOULDER, WHEN SHOULDER IS OVER 6' WIDE
12' FROM EDGE OF TRAVELWAY, WHEN SHOULDER IS LESS THAN 6' WIDE.

△3 A CLEAR PATH OF NOT LESS THAN 3 FT (0.9m) SHALL BE PROVIDED IN SIDEWALK AREAS.

"E" DENOTES EDGE OF SHOULDER OR FACE OF CURB

"F" DENOTES EDGE OF TRAVELWAY

FOR MAXIMUM EFFECTIVENESS AND TO ELIMINATE OR MINIMIZE GLARE, POSITION SIDE MOUNTED SIGNS ON STRUCTURAL STEEL BREAKAWAY SIGN SUPPORTS AS FOLLOWS:

ON A TANGENT SECTION, POSITION THE SIGN SO THE VERTICAL AXIS IS PLUMB AND THE HORIZONTAL AXIS IS AT AN ANGLE OF 93° WITH THE TRAFFIC LANE WHICH THE SIGN SERVES:

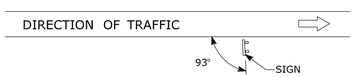

DIAGRAM "A"

ON A HORIZONTAL CURVE SECTION, POSITION THE SIGN SO THE VERTICAL AXIS IS PLUMB AND THE HORIZONTAL AXIS IS AT AN ANGLE OF 90° WITH A STRAIGHT LINE BETWEEN THE SIGN AND THE POINT AT WHICH THE SIGN SHALL BE READ.

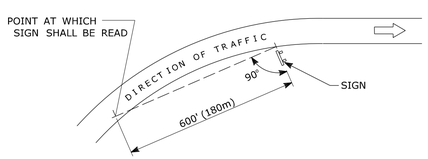

DIAGRAM "B"

SIGN ORIENTATION DETAILS

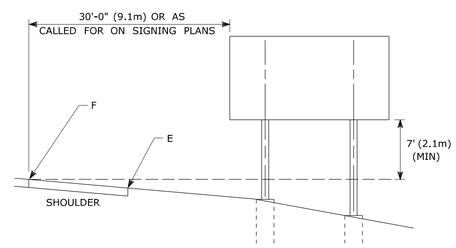

TYPICAL PLACEMENT OF SIDE MOUNTED SIGNS ON STRUCTURAL STEEL BREAKAWAY SIGN SUPPORTS

NOTES:

1) MIN. VERTICAL CLEARANCE ABOVE SIDEWALKS SHALL BE 8'-6" (2.6m).
2) WHERE GUIDE RAIL IS USED, THE OFFSET TO THE NEAR EDGE OF SIGN FACE SHALL BE AS SHOWN ELSEWHERE IN THE CONTRACT PLANS.
3) ON INTERSECTING ROADS AT RAMP TERMINI, THE OFFSET TO THE NEAR EDGE OF OF SIGN FACE SHALL BE 6' (1.8m) MIN. FROM POINT "E".
4) IF 30'-0" (9.1m) MIN. CANNOT BE MET, PLEASE CONTACT THE ENGINEER.

REV.	DATE	REVISION DESCRIPTION
1	2-2011	MINOR REVISIONS.

THE INFORMATION, INCLUDING ESTIMATED QUANTITIES OF WORK, SHOWN ON THESE SHEETS IS BASED ON LIMITED INVESTIGATIONS BY THE STATE AND IS IN NO WAY WARRANTED TO INDICATE THE CONDITIONS OF ACTUAL QUANTITIES OF WORK WHICH WILL BE REQUIRED.

Plotted Date: 2/16/2011

DIMENSIONS ARE IN ENGLISH (".") & METRIC UNITS (mm).
METRIC DIMENSIONS ARE ROUNDED:
- OVER 1" TO NEAREST 5 mm
- UNDER 1" TO NEAREST 1 mm.

NOT TO SCALE

STATE OF CONNECTICUT
DEPARTMENT OF TRANSPORTATION

Filename: CTDOT_TRAFFIC_STD.dgn Model: TR-1208_01

SUBMITTED BY: NAME/DATE/TIME: Charles S. Harlow 2011.02.22 11:09:17 -05'00'

APPROVED BY: NAME/DATE/TIME: John F. Carey 2011.03.02 09:19:01 -05'00'

CTDOT STANDARD SHEET

OFFICE OF ENGINEERING

STANDARD SHEET TITLE: SIGN SUPPORT & SIGN PLACEMENT DETAILS, GORE EXIT SIGN

STANDARD SHEET NO.: TR-1208_01

TYPICAL METAL SIGN POSTS

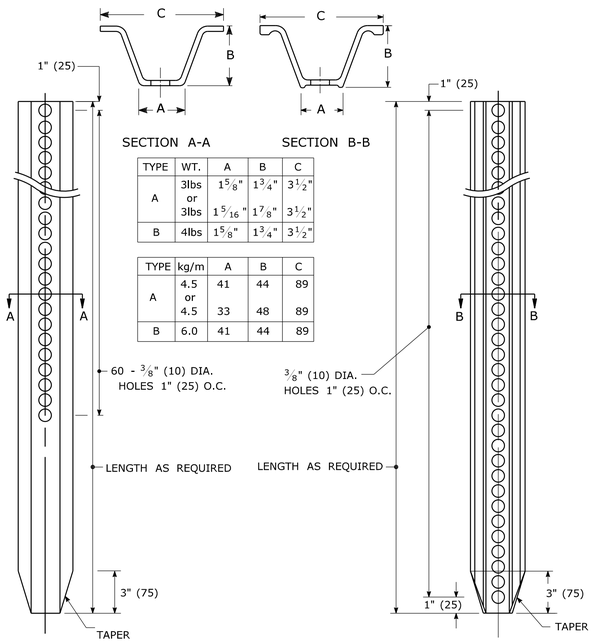

TYPE	WT.	A	B	C
A	3lbs or 3lbs	1 5/8"	1 3/4"	3 1/2"
		1 5/16"	1 7/8"	3 1/2"
B	4lbs	1 5/8"	1 3/4"	3 1/2"

TYPE	kg/m	A	B	C
A	4.5 or 4.5	41	44	89
		33	48	89
B	6.0	41	44	89

TYPICAL SIGN PANEL ATTACHMENT

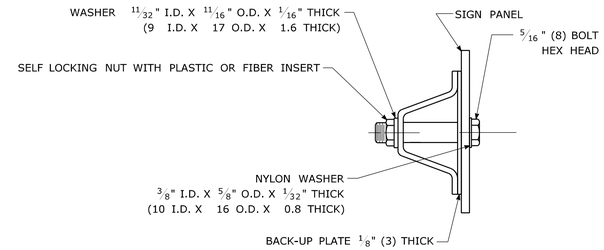

TYPICAL BACK TO BACK SIGN PANEL ATTACHMENT

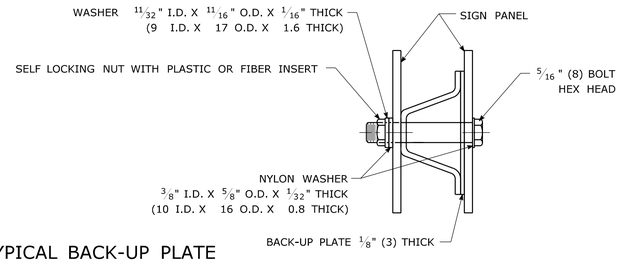

TYPICAL BACK-UP PLATE

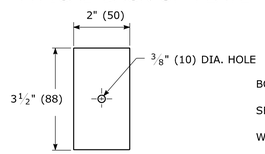

BOLTS - STAINLESS STEEL CONFORMING TO ASTM F593, ALLOY GROUP 1 OR 2 (ALLOY TYPES 304 OR 316).
SELF LOCKING NUTS - STAINLESS STEEL CONFORMING TO ASTM F594, ALLOY GROUP 1 OR 2 (ALLOY TYPES 304 OR 316).
WASHERS - STAINLESS STEEL CONFORMING TO ASTM A240, (ALLOY TYPES 304 OR 316).

METAL DELINEATOR POST

WT./FT. = 1.12 LBS. MIN.
(MASS/m = 1.67 kg/m MIN.)

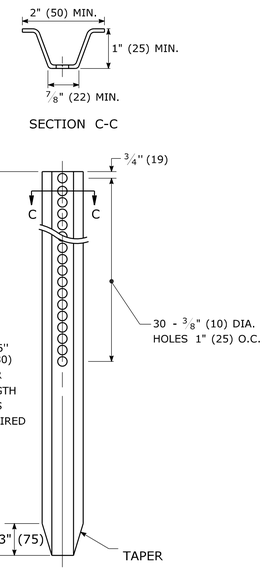

GENERAL NOTES:

1. STEEL FOR DELINEATOR POSTS SHALL BE ASTM A36/A36(m) STEEL. STEEL FOR ALL OTHER POSTS SHALL CONFORM TO THE MECHANICAL REQUIREMENTS OF ASTM A 499 GRADE 60 AND TO THE CHEMICAL REQUIREMENTS OF ASTM A1 CARBON STEEL TEE RAIL HAVING NOMINAL WEIGHT (MASS) OF 91lbs. (45 kg.) OR GREATER PER LINEAR YARD (METER).
2. AFTER FABRICATION, ALL STEEL POSTS, STRAPS AND PLATES SHALL BE GALVANIZED TO MEET THE REQUIREMENTS OF ASTM A123/A123(m).
3. WASHERS FOR BREAKAWAY INSTALLATIONS SHALL MEET ASTM F436, TYPE 1.
4. ALL BOLTS, NUTS, AND WASHERS FOR BREAKAWAY INSTALLATIONS SHALL BE GALVANIZED TO MEET THE REQUIREMENTS OF ASTM A153/A153(m).
5. ALL SIGN POSTS SHALL HAVE BREAKAWAY FEATURES THAT MEET AASHTO REQUIREMENTS CONTAINED IN THE CURRENT "STANDARD SPECIFICATIONS FOR STRUCTURAL SUPPORTS FOR HIGHWAY SIGNS, LUMINAIRES AND TRAFFIC SIGNALS." THE BREAKAWAY FEATURES SHALL BE STRUCTURALLY ADEQUATE TO CARRY THE SIGNS SHOWN IN THE PLANS AT 60 mph (97 km/h) WIND LOADINGS. INSTALLATIONS SHALL BE IN ACCORDANCE WITH MANUFACTURERS RECOMMENDATIONS.
6. TYPE A POSTS - 3 lbs/ft (4.5 kg/m) TYPE B POSTS - 4 lbs/ft (6 kg/m).

BREAKAWAY TYPE I INSTALLATION

FOR 3 & 4 LB. POSTS
(FOR 4.5 & 6.0 kg/m POSTS)

BOLTS - HEX HEAD, INTEGRAL FLANGE CONFORMING TO ASTM A354, SIZE IS 5/16" (8) - 18 UNC X 1 3/4" (44) GRADE BC FOR 3 LBS/FT (4.5kg/m) POSTS & 5/16" (8) - 18 UNC X 2" (50) GRADE BD FOR 4 LBS./FT (6.0 kg/m) POSTS.
NUTS - 5/16" (8) - 18 UNC HEX HEAD, INTEGRAL FLANGE CONFORMING TO ASTM A563, GRADE DH.
LOCKWASHERS - 3/8" (10) HEAVY DUTY EXTERNAL TYPE.

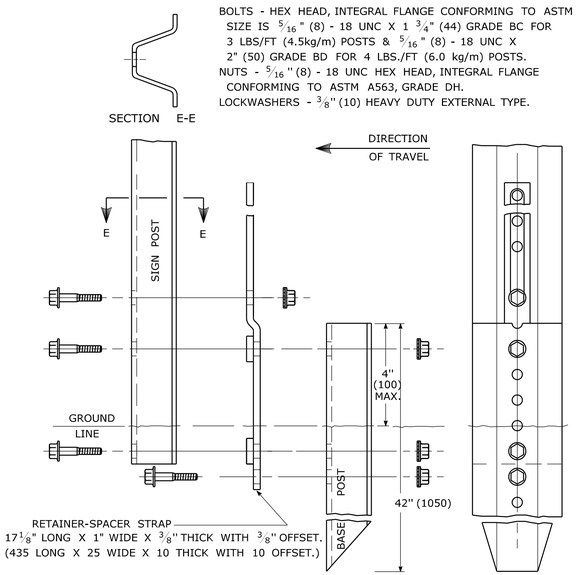

BREAKAWAY TYPE II INSTALLATION

FOR 3 & 4 LB. POSTS
(FOR 4.5 & 6.0 kg/m POSTS)

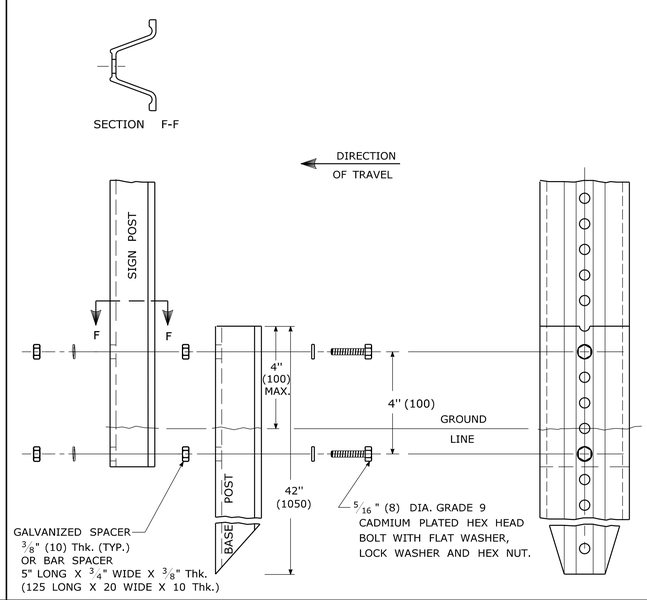

TYPICAL SLEEVE FOR PAVED AREAS

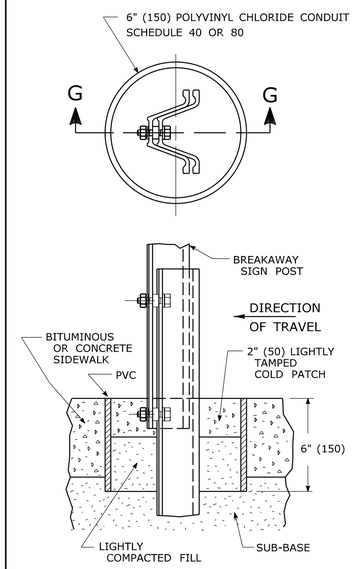

45° SUBMOUNTING BRACKET

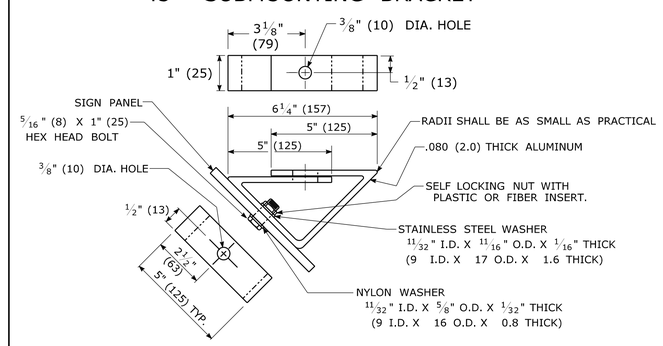

REV.	DATE	REVISION DESCRIPTION
1	2-2011	MINOR REVISIONS.

THE INFORMATION, INCLUDING ESTIMATED QUANTITIES OF WORK, SHOWN ON THESE SHEETS IS BASED ON LIMITED INVESTIGATIONS BY THE STATE AND IS IN NO WAY WARRANTED TO INDICATE THE CONDITIONS OF ACTUAL QUANTITIES OF WORK WHICH WILL BE REQUIRED.

Plotted Date: 3/22/2011

DIMENSIONS ARE IN ENGLISH (.") & METRIC UNITS (mm).
METRIC DIMENSIONS ARE ROUNDED:
- OVER 1" TO NEAREST 5 mm
- UNDER 1" TO NEAREST 1 mm.

NOT TO SCALE

STATE OF CONNECTICUT
DEPARTMENT OF TRANSPORTATION

Filename: CTDOT_TRAFFIC_STD.dgn Model: TR-1208_02

SUBMITTED BY:	NAME/DATE/TIME:
	Charles S. Harlow 2011.03.22 13:20:01 -04'00'
	Joseph C. Cancelliere 2011.03.24 08:24:54 -04'00'
APPROVED BY:	NAME/DATE/TIME:
	John F. Carey 2011.03.24 09:53:08 -04'00'

CTDOT
STANDARD SHEET

OFFICE OF ENGINEERING

STANDARD SHEET TITLE:

METAL SIGN POSTS AND SIGN MOUNTING DETAILS

STANDARD SHEET NO.:

TR-1208_02

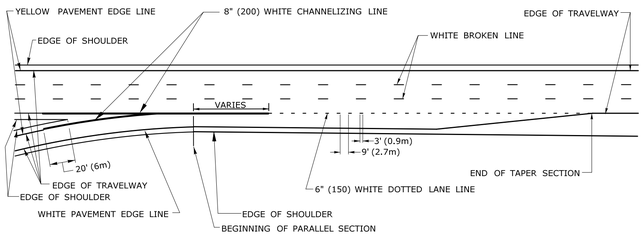

A TYPICAL PARALLEL ACCELERATION LANE

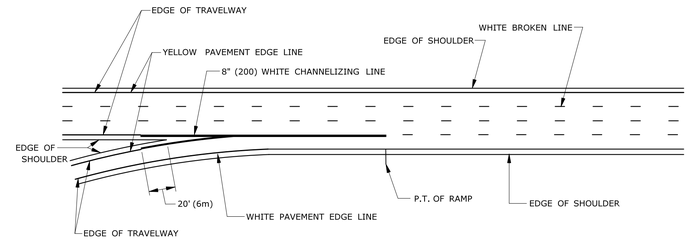

E TYPICAL LANE ADDITION

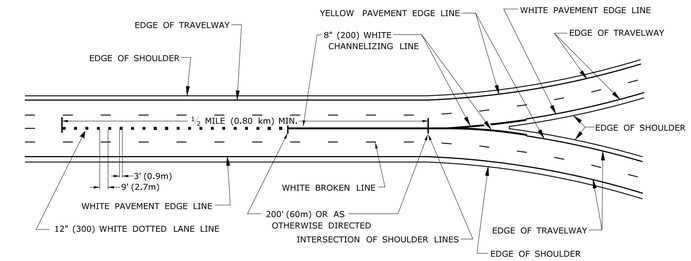

I FOUR LANE SPLIT

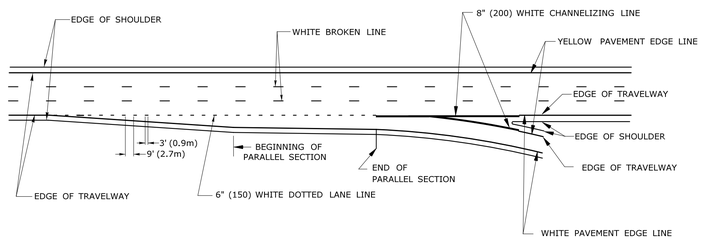

B TYPICAL PARALLEL DECELERATION LANE

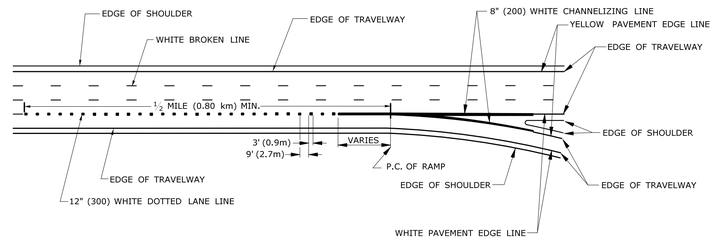

F TYPICAL LANE DROP

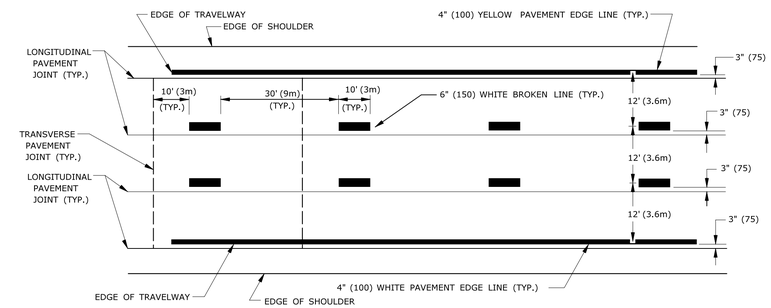

J PLACEMENT OF BROKEN LINES AND EDGE LINES ON BITUMINOUS PAVEMENT

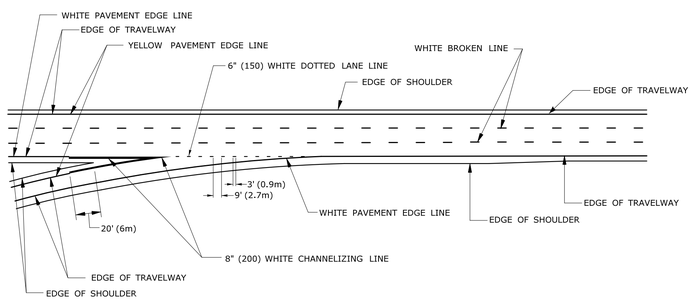

C TYPICAL TAPERED ACCELERATION LANE

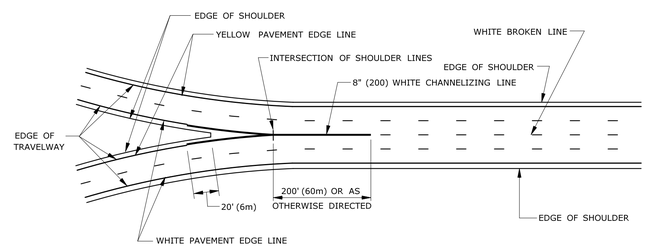

G TYPICAL MERGE TWO MAJOR ROADWAYS

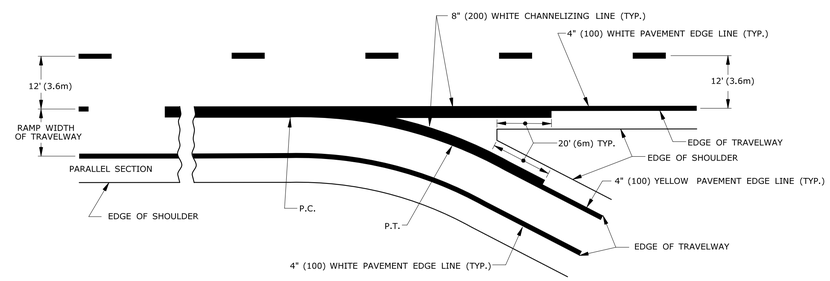

K PLACEMENT OF LINES AT GORE AREAS OF BITUMINOUS PAVEMENTS

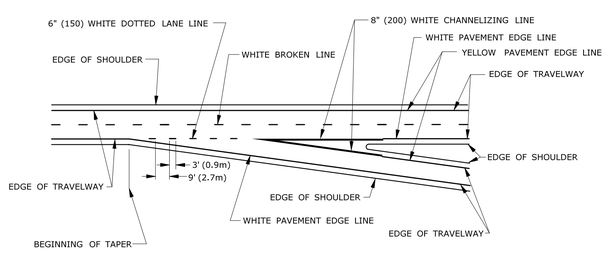

D TYPICAL TAPERED DECELERATION LANE

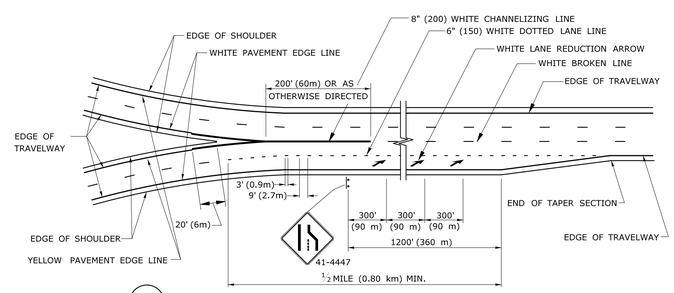

H TYPICAL MERGE TWO MAJOR ROADWAYS WITH LANE REDUCTION

GENERAL NOTES:

1. BROKEN LINE IN CLIMBING LANE IS PLACED PARALLEL TO MAIN LINE BROKEN LINES.
2. BROKEN LINES - 10' (3m) LINE, 30' (9m) SPACE. CLIMBING LANE BROKEN LINES - 10' (3m) LINE, 30' (9m) SPACE.
3. SEE DETAILS (J) AND (K) FOR RELATIONSHIP OF DIRECTIONAL LINES AND PAVEMENT EDGE LINE TO EDGE OF TRAVELWAY.

⇨ DENOTES DIRECTION OF TRAVEL

REV.	DATE	REVISION DESCRIPTION
3	12-2013	REMOVED NOTES REFERRING TO PREFORMED PLASTIC PAVEMENT MARKINGS.
2	2-2011	MINOR METRIC REVISIONS.
1	7-2010	REVISED MARKINGS TO MEET 2009 MUTCD.

THE INFORMATION, INCLUDING ESTIMATED QUANTITIES OF WORK, SHOWN ON THESE SHEETS IS BASED ON LIMITED INVESTIGATIONS BY THE STATE AND IS IN NO WAY WARRANTED TO INDICATE THE CONDITIONS OF ACTUAL QUANTITIES OF WORK WHICH WILL BE REQUIRED.

Plotted Date: 12/4/2013

DIMENSIONS ARE IN ENGLISH ("") & METRIC UNITS (mm).
METRIC DIMENSIONS ARE ROUNDED:
- OVER 1" TO NEAREST 5 mm
- UNDER 1" TO NEAREST 1 mm.

NOT TO SCALE

STATE OF CONNECTICUT
DEPARTMENT OF TRANSPORTATION

Filename: CTDOT_TRAFFIC_STD.dgn Model: TR-1210_01

SUBMITTED BY: NAME/DATE/TIME: Mark F. Makuch 2013.12.10 08:19:08-05'00'

APPROVED BY: NAME/DATE/TIME: Charles S. Harlow 2013.12.10 11:30:03-05'00'

CTDOT STANDARD SHEET

OFFICE OF ENGINEERING

STANDARD SHEET TITLE:

PAVEMENT MARKINGS (DURABLE MARKINGS) FOR DIVIDED HIGHWAYS

STANDARD SHEET NO.: TR-1210_01

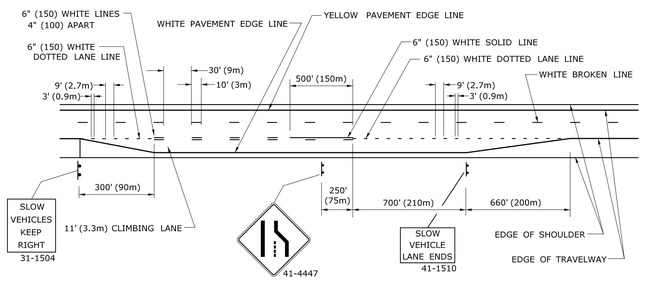

L TYPICAL CLIMBING LANE

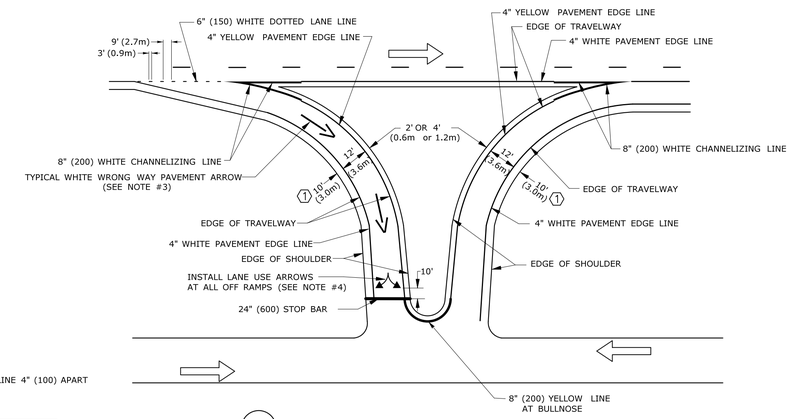

O TYPICAL RAMP TREATMENT

1 IF WIDTH IS LESS THAN DIMENSION SHOWN, CONTACT THE ENGINEER.

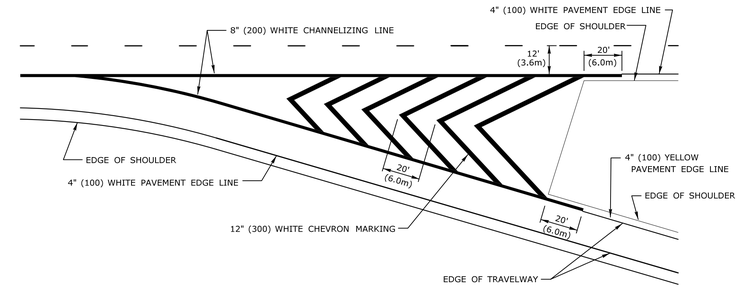

Q TYPICAL CHEVRON MARKINGS AT GORE AREAS OF BITUMINOUS PAVEMENT WHERE CALLED FOR ON THE PLANS

NOTES:

1. BROKEN LINES AND CLIMBING LANE BROKEN LINES - 10' (3m) LINE, 30' (9m) SPACE
2. SEE DETAILS J AND K ON STANDARD SHEET "PAVEMENT MARKINGS FOR DIVIDED HIGHWAYS" (SHEET # TR-1210_01) FOR RELATIONSHIP OF DIRECTIONAL LINES AND PAVEMENT EDGE LINE TO EDGE OF TRAVELWAY.
3. TWO WHITE WRONG WAY PAVEMENT ARROWS SHALL BE INSTALLED. THE FIRST SHALL BE INSTALLED 100' FROM THE LANE-USE ARROW(S), THE SECOND SHOULD BE 250'± FROM THE FIRST WHERE SPACE PERMITS.
4. AT OFF RAMPS WITH MORE THAN ONE LANE, INSTALL LANE USE ARROWS IN EACH LANE. INSTALL SETS OF LANE USE ARROWS EQUALLY SPACED FROM THE STOP BAR TO THE BEGINNING OF THE MULTI LANE SECTION (160' MAX SPACING).

DENOTES DIRECTION OF TRAVEL

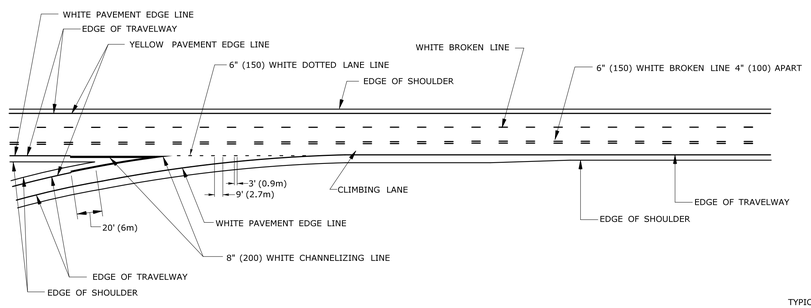

M TREATMENT OF CLIMBING LANE - THROUGH ACCELERATION LANE

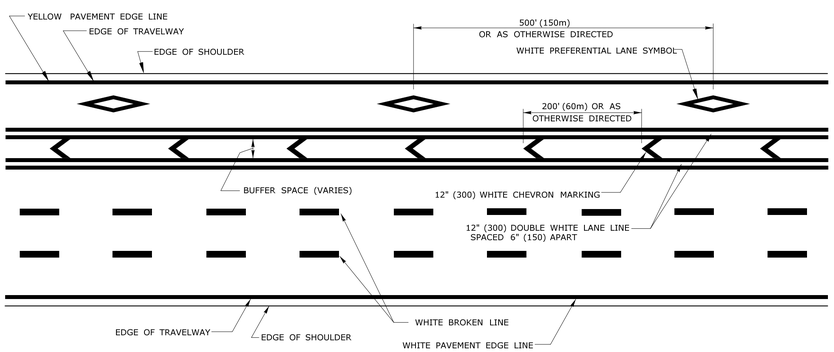

N TYPICAL HIGH OCCUPANCY VEHICLE (HOV) LANE

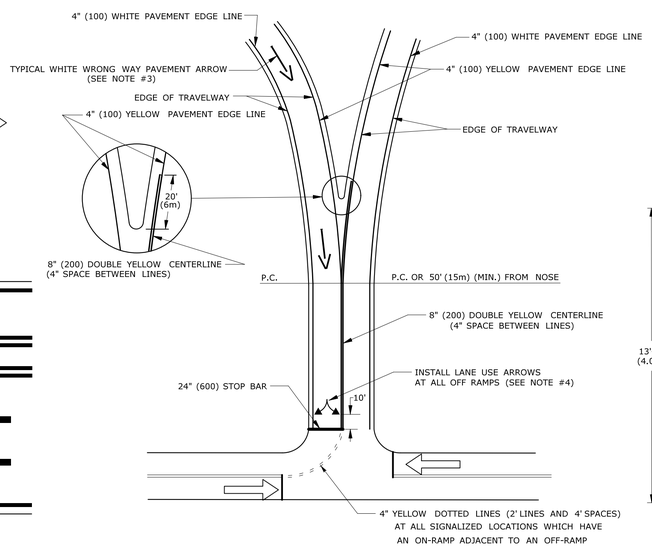

P TYPICAL CENTERLINE MARKING ON ABUTTING RAMPS AT INTERSECTING ROADWAYS

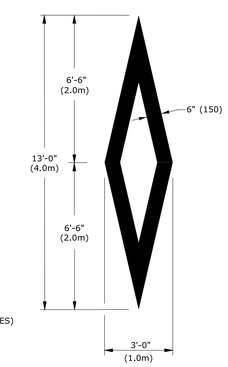

WHITE PREFERENTIAL LANE SYMBOL

13.0 S.F. (1.2m²)

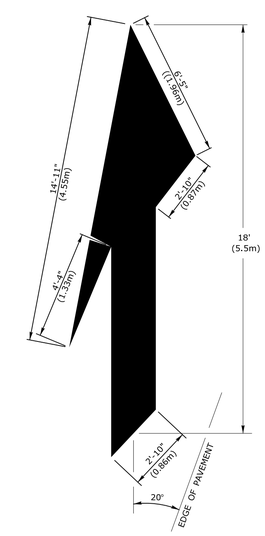

WHITE LANE REDUCTION ARROW

41.8 S.F. (3.9m²)

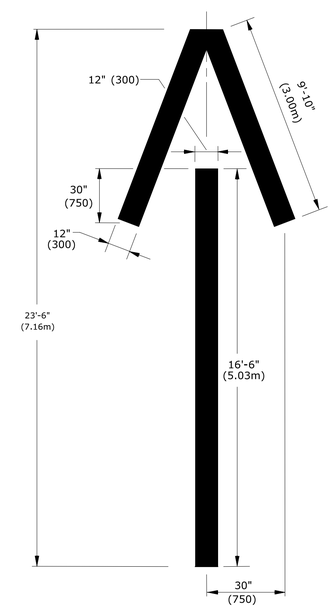

WHITE WRONG WAY PAVEMENT ARROW

36.2 S.F. (3.4m²)

REV.	DATE	REVISION DESCRIPTION
3	12-2013	REVISED DETAILS L O P & Q. REMOVED PREFORMED PLASTIC PAVEMENT MARKING NOTE. REVISED WRONG WAY PAVEMENT ARROW NOTES. ADDED LANE USE ARROWS & NOTE.
2	2-2011	ADDED PAVEMENT MARKING S.F. (m²).
1	7-2010	REVISED MARKINGS TO MEET 2009 MUTCD.

THE INFORMATION, INCLUDING ESTIMATED QUANTITIES OF WORK, SHOWN ON THESE SHEETS IS BASED ON LIMITED INVESTIGATIONS BY THE STATE AND IS IN NO WAY WARRANTED TO INDICATE THE CONDITIONS OF ACTUAL QUANTITIES OF WORK WHICH WILL BE REQUIRED.

Plotted Date: 12/4/2013

DIMENSIONS ARE IN ENGLISH ("') & METRIC UNITS (mm). METRIC DIMENSIONS ARE ROUNDED: - OVER 1" TO NEAREST 5 mm - UNDER 1" TO NEAREST 1 mm.

NOT TO SCALE

STATE OF CONNECTICUT
DEPARTMENT OF TRANSPORTATION

Filename: CTDOT_TRAFFIC_STD.dgn Model: TR-1210_02

SUBMITTED BY: NAME/DATE/TIME: Mark F. Makuch 2013.12.10 08:12:51-05'00'

APPROVED BY: NAME/DATE/TIME: Charles S. Harlow 2013.12.10 11:30:57-05'00'

CTDOT STANDARD SHEET

OFFICE OF ENGINEERING

STANDARD SHEET TITLE:

PAVEMENT MARKINGS (DURABLE MARKINGS) FOR DIVIDED HIGHWAYS

STANDARD SHEET NO.: TR-1210_02

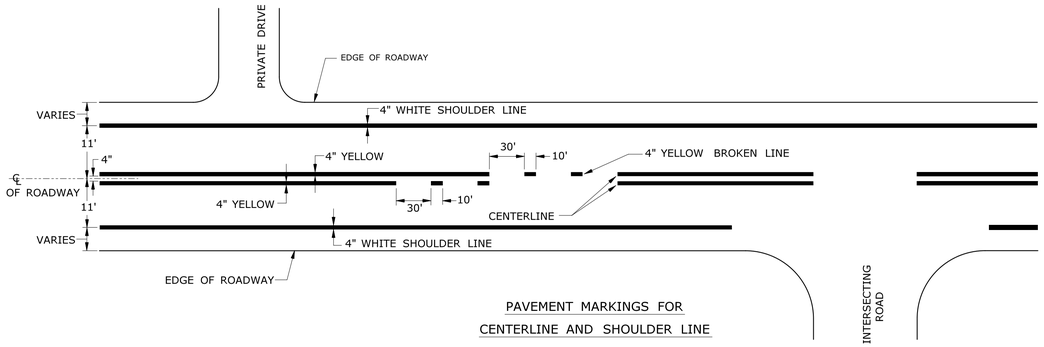

PAVEMENT MARKINGS FOR
CENTERLINE AND SHOULDER LINE

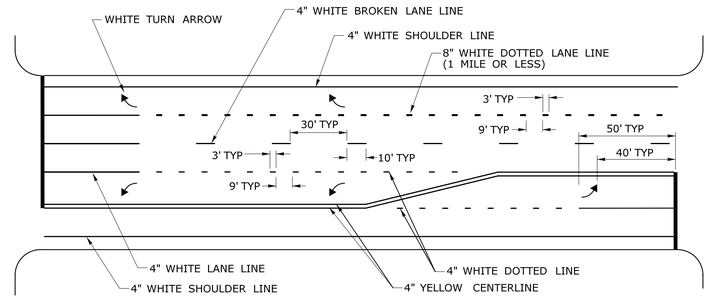

PAVEMENT MARKINGS FOR
TURNING LANES

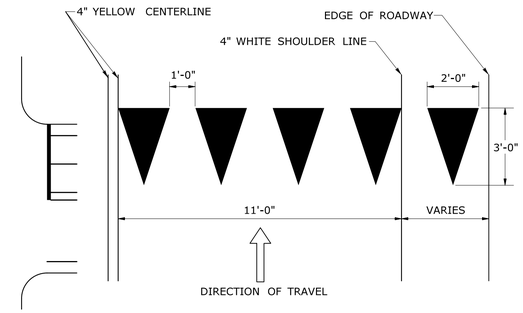

YIELD LINE DETAIL
(WHITE)

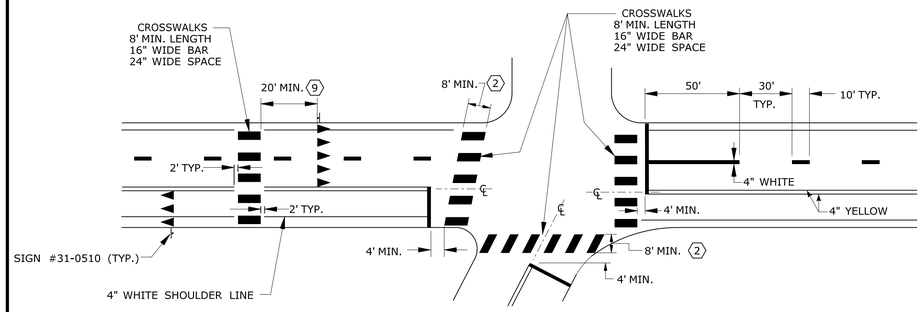

PAVEMENT MARKINGS FOR
STOP BARS, YIELD LINES, AND CROSSWALKS

NOTES:

STOP BARS AND YIELD LINES

1. STOP BARS AND YIELD LINES SHALL BE WHITE.
2. STOP BARS SHALL BE 12" MIN. UNLESS OTHERWISE NOTED ON PLANS.
3. STOP BARS TO BE MARKED A MINIMUM OF 4' IN ADVANCE OF THE NEAREST EDGE OF CROSSWALK AND SHOULD BE PLACED 90° TO THE CENTERLINE OF THE ROADWAY.
4. IN THE ABSENCE OF A MARKED CROSSWALK THE STOP BAR SHOULD BE PLACED 90° TO THE CENTERLINE OF THE ROADWAY, AT THE DESIRED STOPPING POINT AT LEAST 5' AND NO MORE THAN 30' FROM THE NEAREST EDGE OF THE INTERSECTING ROADWAY.
5. THE STOP BAR SHOULD BE PLACED IN LINE WITH THE STOP SIGN. HOWEVER, IF THE STOP SIGN CANNOT BE LOCATED EXACTLY WHERE VEHICLES ARE EXPECTED TO STOP, THE STOP BAR SHOULD BE PLACED AT THE STOPPING POINT.
6. FOR STOP BARS AT RAMPS SEE DETAILS "O" & "P" AND NOTES ON TRAFFIC STANDARD SHEET TR-1210_02 "PAVEMENT MARKINGS FOR DIVIDED HIGHWAYS".
7. YIELD LINES SHOULD BE INSTALLED FROM THE CENTERLINE TO THE CURB LINE/EDGE OF ROAD AND SHOULD BE PLACED 90° TO THE CENTERLINE OF THE ROADWAY.
8. FOR YIELD LINE INSTALLATIONS, ONLY FULL TRIANGLES ARE TO BE INSTALLED.

9. AT MID-BLOCK CROSSWALKS ONLY, YIELD LINES SHOULD BE INSTALLED 20 TO 50 FEET IN ADVANCE OF THE NEAREST CROSSWALK LINE, OR AS DIRECTED BY THE ENGINEER.

10. THE YIELD LINE SHOULD BE PLACED IN LINE WITH A YIELD SIGN. HOWEVER, IF THE YIELD SIGN CANNOT BE LOCATED EXACTLY WHERE VEHICLES ARE EXPECTED TO YIELD, THE YIELD LINE SHOULD BE PLACED AT THE YIELDING POINT.

CROSSWALKS

1. CROSSWALK MARKINGS SHALL BE WHITE.

2. AT LOCATIONS WHERE THE CROSSWALK IS SKEWED, BARS TO BE PARALLEL TO ℄ AND ENDS OF BARS TO BE PARALLEL. THE LENGTH OF THE BARS WILL VARY DEPENDING ON THE ANGLE OF SKEW.

3. BARS SHOULD BE NO CLOSER THAN 1' FROM CURB LINE/EDGE OF ROAD.
4. ONLY FULL LENGTH BARS ARE TO BE INSTALLED.
5. DECORATIVE CROSSWALKS SHALL BE BANDED FROM CURB TO CURB WITH A MINIMUM 12" WIDE WHITE TRANSVERSE LINE ALONG EACH EDGE.
6. 24" WIDE SPACE TO BE CENTERED ON YELLOW CENTERLINE.

RAILROAD GRADE CROSSINGS

1. RAILROAD MARKINGS SHALL BE WHITE.
2. ON MULTI-LANE ROADS THE TRANSVERSE BANDS SHOULD EXTEND ACROSS THE APPROACH LANES AND INDIVIDUAL R X R SYMBOLS SHOULD BE USED IN EACH APPROACH LANE.

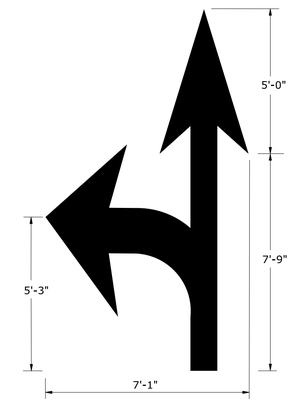

REFER TO ADJACENT VIEWS FOR DIMENSIONING
27.0 S.F.

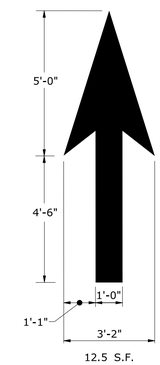

12.5 S.F.

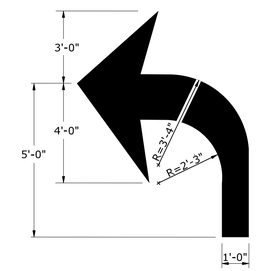

15.5 S.F.

27.0 S.F.
LEFT & RIGHT
ARROW COMBO

38.5 S.F.
3 WAY ARROW
COMBO

PAVEMENT ARROW DETAILS
(WHITE)
ARROWS SHALL BE CENTERED IN TRAVEL LANE

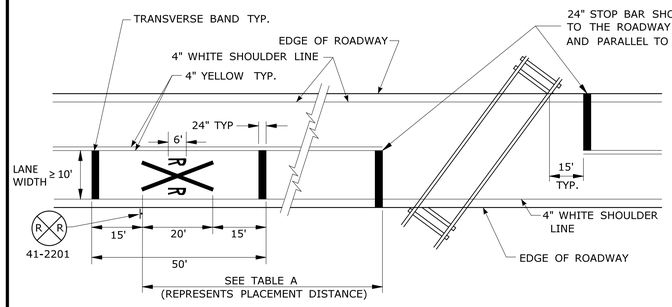

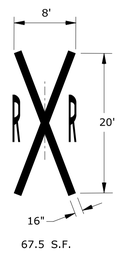

67.5 S.F.

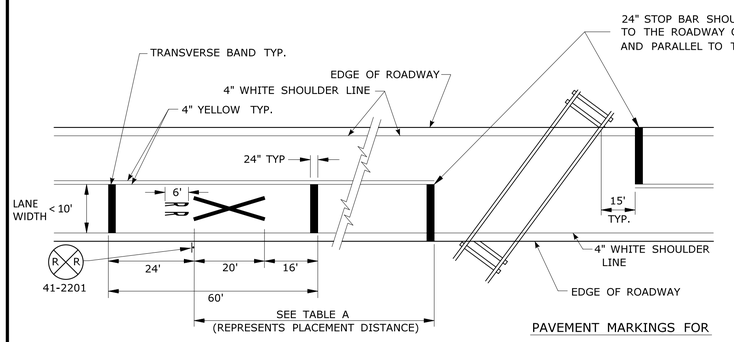

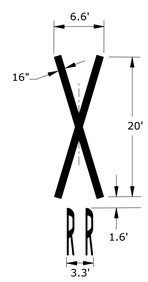

67.5 S.F.

PAVEMENT MARKINGS FOR
RAILROAD GRADE CROSSINGS

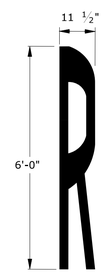

5.75 S.F.

TABLE A	
POSTED OR 85 PERCENTILE SPEED M.P.H.	MINIMUM DISTANCE FT.
20	100
25	100
30	100
35	100
40	125
45	175
50	250
55	325
60	400
65	475

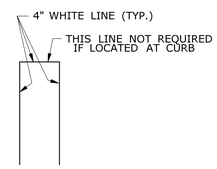

STANDARD
PARKING STALL

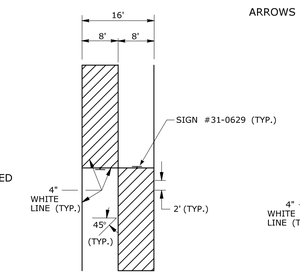

(PIGGY BACK STYLE)

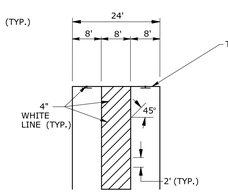

(SIDE BY SIDE STYLE)
(SHARED AISLE)

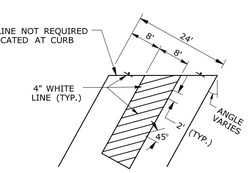

(ANGLED SIDE BY SIDE STYLE)
(SHARED AISLE)

PARKING STALLS FOR HANDICAPPED

NOTES:
PAVEMENT MARKING

1. FOR PAVEMENT MARKINGS ON A CLIMBING LANE SEE DETAIL "L" ON TRAFFIC STANDARD SHEET TR-1210_02 "PAVEMENT MARKINGS FOR DIVIDED HIGHWAYS".
2. AREA OF PAVEMENT MARKINGS AS INDICATED IS APPROXIMATE.
3. FOR PAVEMENT MARKING LINES, STOP BARS AND ARROWS AT RAMPS SEE DETAILS "O" & "P" AND NOTES ON TRAFFIC STANDARD SHEET TR-1210_02 "PAVEMENT MARKINGS FOR DIVIDED HIGHWAYS".
4. RIGHT TURN PAVEMENT MARKINGS ARROWS ARE MIRROR IMAGE OF LEFT TURN PAVEMENT MARKING ARROWS.
5. SHARED AISLES MAY NOT BE USED WHERE CONNECTICUT BUILDING CODE GOVERNS.
6. LANE WIDTHS TO BE 11' UNLESS OTHERWISE NOTED.

REV.	DATE	REVISION DESCRIPTION
3	10-2014	ADDED YIELD LINE DETAIL AND NOTES. REVISED NOTES FOR STOP BARS AND CROSSWALKS. REVISED MARKINGS FOR STOP BARS AND CROSSWALKS. REVISED STANDARD LANE WIDTH. REVISED MARKINGS FOR GRADE CROSSINGS AND TABLE A.
2	12-2013	REMOVED PAVEMENT MARKING ARROWS ON RAMPS NOTES AND ADDED NEW NOTE #3 REFERRING TO SHEET TR-1210_02.
1	2-2011	ADDED PAVEMENT MARKINGS FOR TURNING LANES.

THE INFORMATION, INCLUDING ESTIMATED QUANTITIES OF WORK, SHOWN ON THESE SHEETS IS BASED ON LIMITED INVESTIGATIONS BY THE STATE AND IS IN NO WAY WARRANTED TO INDICATE THE CONDITIONS OF ACTUAL QUANTITIES OF WORK WHICH WILL BE REQUIRED.

Plotted Date: 10/9/2014

DIMENSIONS ARE IN ENGLISH ('.")

NOT TO SCALE

STATE OF CONNECTICUT
DEPARTMENT OF TRANSPORTATION

Filename: CTDOT_TRAFFIC_STD.DGN Model: TR-1210_03

SUBMITTED BY: NAME/DATE/TIME:
Mark F. Makuch, P.E.
2014.10.21
08:22:18-04'00'

APPROVED BY: NAME/DATE/TIME:
Charles S. Harlow, P.E.
2014.11.06 13:15:52-05'00'

CTDOT
STANDARD SHEET

OFFICE OF ENGINEERING

STANDARD SHEET TITLE:

SPECIAL DETAILS AND PAVEMENT MARKINGS FOR TWO-WAY HIGHWAYS

STANDARD SHEET NO.:

TR-1210_03

E5 - SERIES

E5-1

EXIT

COPY & BORDER - WHITE
BACKGROUND - GREEN

	AREA (SQ. FT)	SIZE (INCHES)	CONN. D.O.T. #	POSTS
	16.0	48	51-6147	2

16 - SERIES

CONSTRUCTION AHEAD
ROAD USE RESTRICTED
STATE LIABILITY LIMITED
GENERAL STATUTES SEC 13a-115, 13a-145
COMMISSIONER OF TRANSPORTATION

	AREA (SQ. FT)	SIZE (INCHES)	CONN. D.O.T. #	POSTS
16-M	5.0	30X24	80-1613	1
16-H	17.5	60X42	80-1608	2
16-E	35.0	84X60	80-1605	2

CONSTRUCTION AHEAD
SIDEWALK USE RESTRICTED
STATE LIABILITY LIMITED
GENERAL STATUTES SEC 13a-115, 13a-145
COMMISSIONER OF TRANSPORTATION

	AREA (SQ. FT)	SIZE (INCHES)	CONN. D.O.T. #	POSTS
16-S	10.0	48X30	80-1619	2

G20 - SERIES

G20-2a

END
ROAD WORK

	AREA (SQ. FT)	SIZE (INCHES)	CONN. D.O.T. #	POSTS
	8.0	48X24	80-9612	2

ROAD WORK
NEXT 0 MILE(S)
BE PREPARED
TO STOP

VARIABLE MILEAGE

	AREA (SQ. FT)	SIZE (INCHES)	CONN. D.O.T. #	POSTS
	90.0	120X108	80-9728	

WORK AREA
BE PREPARED
TO STOP

	AREA (SQ. FT)	SIZE (INCHES)	CONN. D.O.T. #	POSTS
	9.0	36	80-9711	1
	16.0	48	80-9712	2

NEXT 0 MILES

VARIABLE MILEAGE

	AREA (SQ. FT)	SIZE (INCHES)	CONN. D.O.T. #	POSTS
	7.0	72X14	80-9720	

BUSINESS
ACCESS

VARIABLE ARROW
COPY & BORDER - WHITE
BACKGROUND - BLUE

	AREA (SQ. FT)	SIZE (INCHES)	CONN. D.O.T. #	POSTS
	9.0	36	50-5934	1

M4 - SERIES

M4-8

DETOUR

	AREA (SQ. FT)	SIZE (INCHES)	CONN. D.O.T. #	POSTS
	2.0	24X12	80-9707	1

M4-9b

DETOUR

VARIABLE ARROW

	AREA (SQ. FT)	SIZE (INCHES)	CONN. D.O.T. #	POSTS
	5.0	30X24	80-9703	1

M4-8a

END
DETOUR

	AREA (SQ. FT)	SIZE (INCHES)	CONN. D.O.T. #	POSTS
	3.0	24X18	80-9708	1

M4-9b

DETOUR

VARIABLE ARROW

	AREA (SQ. FT)	SIZE (INCHES)	CONN. D.O.T. #	POSTS
	6.25	30X30	80-9706	1

M4-10

(R) DETOUR
(L) DETOUR

	AREA (SQ. FT)	SIZE (INCHES)	CONN. D.O.T. #	POSTS
	6.0	48X18	80-9701R	2
	6.0	48X18	80-9702L	2

DETOUR

VARIABLE ARROW

	AREA (SQ. FT)	SIZE (INCHES)	CONN. D.O.T. #	POSTS
	5.0	30X24	80-9710	2

R1 - SERIES

R1-1

STOP

*
COPY & BORDER - WHITE
BACKGROUND - RED

	AREA (SQ. FT)	SIZE (INCHES)	CONN. D.O.T. #	POSTS
	5.19	30	31-0552	1
	13.30	48	31-0557	2

R1-2

YIELD

*
COPY & BORDER - RED
BACKGROUND - WHITE

	AREA (SQ. FT)	SIZE (INCHES)	CONN. D.O.T. #	POSTS
	3.90	36	31-0523	1
	10.83	60	31-0528	2

R4 - SERIES

R4-7

COPY & BORDER - BLACK
BACKGROUND - WHITE

	AREA (SQ. FT)	SIZE (INCHES)	CONN. D.O.T. #	POSTS
	5.0	24X30	31-1526	1

R9 & R11 - SERIES

R9-9

SIDEWALK
CLOSED

COPY & BORDER - BLACK
BACKGROUND - WHITE

	AREA (SQ. FT)	SIZE (INCHES)	CONN. D.O.T. #	POSTS
	3.75	30X18	80-9076	1

R11-3a

ROAD CLOSED
00 MILES AHEAD
LOCAL TRAFFIC ONLY

VARIABLE MILEAGE
COPY & BORDER - BLACK
BACKGROUND - WHITE

	AREA (SQ. FT)	SIZE (INCHES)	CONN. D.O.T. #	POSTS
	12.5	60X30	80-9077	2

R9-11

SIDEWALK CLOSED
AHEAD
CROSS HERE

VARIABLE ARROW
COPY & BORDER - BLACK
BACKGROUND - WHITE

	AREA (SQ. FT)	SIZE (INCHES)	CONN. D.O.T. #	POSTS
	2.0	24X12	80-9074	1

R11-3b

BRIDGE CLOSED
00 MILES AHEAD
LOCAL TRAFFIC ONLY

VARIABLE MILEAGE
COPY & BORDER - BLACK
BACKGROUND - WHITE

	AREA (SQ. FT)	SIZE (INCHES)	CONN. D.O.T. #	POSTS
	12.5	60X30	80-9078	2

R9-11a

SIDEWALK CLOSED
CROSS HERE

VARIABLE ARROW
COPY & BORDER - BLACK
BACKGROUND - WHITE

	AREA (SQ. FT)	SIZE (INCHES)	CONN. D.O.T. #	POSTS
	2.0	24X12	80-9075	1

R11-3b

ROAD CLOSED
TO
THRU TRAFFIC

COPY & BORDER - BLACK
BACKGROUND - WHITE

	AREA (SQ. FT)	SIZE (INCHES)	CONN. D.O.T. #	POSTS
	12.5	60X30	80-9081	2

R11-2

ROAD
CLOSED

COPY & BORDER - BLACK
BACKGROUND - WHITE

	AREA (SQ. FT)	SIZE (INCHES)	CONN. D.O.T. #	POSTS
	10.0	48X30	80-9080	2

ROAD WORK
AHEAD
FINES
DOUBLED

COPY & BORDER - BLACK
BACKGROUND - WHITE

	AREA (SQ. FT)	SIZE (INCHES)	CONN. D.O.T. #	POSTS
	14.0	48X42	31-1906	2
	22.5	60X54	31-1907	2
	30.0	72X60	31-1908	2

W1 - SERIES

W1-4

(L) (R)

	AREA (SQ. FT)	SIZE (INCHES)	CONN. D.O.T. #	POSTS
	9.0	36	80-9432L	1
	9.0	36	80-9431R	1
	16.0	48	80-9452L	2
	16.0	48	80-9451R	2

W1-6

(L or R)

	AREA (SQ. FT)	SIZE (INCHES)	CONN. D.O.T. #	POSTS
	4.5	36X18	80-9422	1
	8.0	48X24	80-9424	2

W1-8

	AREA (SQ. FT)	SIZE (INCHES)	CONN. D.O.T. #	POSTS
	1.5	12X18	80-9402	1
	5.0	24X30	80-9403	1
	7.5	30X36	80-9404	1

BOTH LANES
SHIFT LEFT
AHEAD (L)

BOTH LANES
SHIFT RIGHT
AHEAD (R)

	AREA (SQ. FT)	SIZE (INCHES)	CONN. D.O.T. #	POSTS
	16.0	48	80-9433L	2
	16.0	48	80-9435R	2

AHEAD (L) AHEAD (R)

	AREA (SQ. FT)	SIZE (INCHES)	CONN. D.O.T. #	POSTS
	25.0	60	80-9483L	2
	25.0	60	80-9485R	2

BOTH LANES
SHIFT LEFT
(L)

BOTH LANES
SHIFT RIGHT
(R)

	AREA (SQ. FT)	SIZE (INCHES)	CONN. D.O.T. #	POSTS
	16.0	48	80-9434L	2
	16.0	48	80-9436R	2

(L) (R)

	AREA (SQ. FT)	SIZE (INCHES)	CONN. D.O.T. #	POSTS
	25.0	60	80-9484L	2
	25.0	60	80-9486R	2

AHEAD (L) AHEAD (R)

	AREA (SQ. FT)	SIZE (INCHES)	CONN. D.O.T. #	POSTS
	25.0	60	80-9443L	2
	25.0	60	80-9445R	2

(L) (R)

	AREA (SQ. FT)	SIZE (INCHES)	CONN. D.O.T. #	POSTS
	25.0	60	80-9444L	2
	25.0	60	80-9446R	2

W3 - SERIES

W3-1

STOP
AHEAD

	AREA (SQ. FT)	SIZE (INCHES)	CONN. D.O.T. #	POSTS
	9.0	36	80-9808	1

W3-1a

OCTAGON - RED W/ WHITE BORDER
ARROW & BORDER - BLACK
BACKGROUND - ORANGE

	AREA (SQ. FT)	SIZE (INCHES)	CONN. D.O.T. #	POSTS
	9.0	36	80-9050	1
	16.0	48	80-9051	2

W3-2a

TRIANGLE - RED W/ WHITE BORDER
ARROW & BORDER - BLACK
BACKGROUND - ORANGE

	AREA (SQ. FT)	SIZE (INCHES)	CONN. D.O.T. #	POSTS
	9.0	36	80-9054	1
	16.0	48	80-9055	2

W3-3

TOP CIRCLE - RED
MIDDLE CIRCLE - YELLOW
BOTTOM CIRCLE - GREEN
COPY & BORDER - BLACK
BACKGROUND - ORANGE

	AREA (SQ. FT)	SIZE (INCHES)	CONN. D.O.T. #	POSTS
	9.0	36	80-9052	1
	16.0	48	80-9053	2

W4-W6 - SERIES

W4-2

(L) (R)

	AREA (SQ. FT)	SIZE (INCHES)	CONN. D.O.T. #	POSTS
	16.0	48	80-9918L	2
	16.0	48	80-9917R	2

W6-3

	AREA (SQ. FT)	SIZE (INCHES)	CONN. D.O.T. #	POSTS
	16.0	48	80-9945	2

W8-W9 - SERIES

W8-1

BUMP

	AREA (SQ. FT)	SIZE (INCHES)	CONN. D.O.T. #	POSTS
	9.0	36	80-9901	1
	16.0	48	80-9902	2

BUMP
AHEAD

	AREA (SQ. FT)	SIZE (INCHES)	CONN. D.O.T. #	POSTS
	9.0	36	80-9801	1
	16.0	48	80-9802	2

W9-2

LANE ENDS
MERGE
LEFT (L)

LANE ENDS
MERGE
RIGHT (R)

	AREA (SQ. FT)	SIZE (INCHES)	CONN. D.O.T. #	POSTS
	16.0	48	80-9910L	2
	16.0	48	80-9911R	2

W13 - SERIES

W13-1

00
M.P.H.

SUBPLATE
VARIABLE SPEED

	AREA (SQ. FT)	SIZE (INCHES)	CONN. D.O.T. #	POSTS
	2.25	18	80-9568	1
	4.0	24	80-9569	1

REDUCE
SPEED TO
00 MPH

VARIABLE SPEED

	AREA (SQ. FT)	SIZE (INCHES)	CONN. D.O.T. #	POSTS
	9.0	36	80-9506	1
	16.0	48	80-9508	2

SPEED LIMIT AHEAD
00 MPH

VARIABLE SPEED

	AREA (SQ. FT)	SIZE (INCHES)	CONN. D.O.T. #	POSTS
	12.0	72X24	80-9519	2

W20 - SERIES

W20-1

ROAD
WORK
AHEAD

	AREA (SQ. FT)	SIZE (INCHES)	CONN. D.O.T. #	POSTS
	6.25	30	80-9602	1
	9.0	36	80-9603	1
	16.0	48	80-9604	2

LEFT
LANES
CLOSED
(L)

RIGHT
LANES
CLOSED
(R)

	AREA (SQ. FT)	SIZE (INCHES)	CONN. D.O.T. #	POSTS
(L)	16.0	48	80-9836	2
(R)	16.0	48	80-9839	2

W20-7a

	AREA (SQ. FT)	SIZE (INCHES)	CONN. D.O.T. #	POSTS
	9.0	36	80-9803	1
	16.0	48	80-9804	2

W20-1

ROAD
WORK
0000 FT

VARIABLE DISTANCE

	AREA (SQ. FT)	SIZE (INCHES)	CONN. D.O.T. #	POSTS
	9.0	36	80-9614	1
	16.0	48	80-9615	2

LEFT
TWO LANES
CLOSED
AHEAD
(L)

RIGHT
TWO LANES
CLOSED
AHEAD
(R)

	AREA (SQ. FT)	SIZE (INCHES)	CONN. D.O.T. #	POSTS
(L)	16.0	48	80-9837	2
(R)	16.0	48	80-9838	2

SLOW MOVING
TRUCKS AHEAD

	AREA (SQ. FT)	SIZE (INCHES)	CONN. D.O.T. #	POSTS
	32.0	96X48	80-9815	

W20-2

DETOUR
1000 FT

	AREA (SQ. FT)	SIZE (INCHES)	CONN. D.O.T. #	POSTS
	9.0	36	80-9805	1
	16.0	48	80-9806	2

LEFT LANE
CLOSED
AHEAD
(L)

RIGHT LANE
CLOSED
AHEAD
(R)

	AREA (SQ. FT)	SIZE (INCHES)	CONN. D.O.T. #	POSTS
(L)	16.0	48	80-9847	2
(R)	16.0	48	80-9848	2

(A) AHEAD
(B) 1/2 MILE
(C) 1 MILE

	AREA (SQ. FT)	SIZE (INCHES)	CONN. D.O.T. #	POSTS
	1.66	30X8	80-9829	

W20-4

ONE LANE
ROAD
AHEAD

	AREA (SQ. FT)	SIZE (INCHES)	CONN. D.O.T. #	POSTS
	9.0	36	80-9834	1
	16.0	48	80-9835	2

LEFT
LANE
CLOSED
(L)

RIGHT
LANE
CLOSED
(R)

	AREA (SQ. FT)	SIZE (INCHES)	CONN. D.O.T. #	POSTS
(L)	16.0	48	80-9846	2
(R)	16.0	48	80-9849	2

W21 - SERIES

W21-6

SURVEY
CREW

	AREA (SQ. FT)	SIZE (INCHES)	CONN. D.O.T. #	POSTS
	9.0	36	80-9607	1

PEDESTRIAN
DETOUR

	AREA (SQ. FT)	SIZE (INCHES)	CONN. D.O.T. #	POSTS
	2.0	24X12	80-9912	1

W22 - SERIES

W22-1

BLASTING
ZONE
1000 FT

	AREA (SQ. FT)	SIZE (INCHES)	CONN. D.O.T. #	POSTS
	9.0	36	80-9620	1
	16.0	48	80-9625	2

W22-2

TURN OFF
2-WAY RADIO
AND
CELL PHONE

	AREA (SQ. FT)	SIZE (INCHES)	CONN. D.O.T. #	POSTS
	10.5	42X36	80-9623	2

W22-3

END
BLASTING
ZONE

	AREA (SQ. FT)	SIZE (INCHES)	CONN. D.O.T. #	POSTS
	7.5	36X30	80-9622	1
	10.5	42X36	80-9621	2

(VARIABLE LEGEND)

	AREA (SQ. FT)	SIZE (INCHES)	CONN. D.O.T. #	POSTS
	4.17	60X10	80-9913	2
	12.0	96X18	80-9914	2
	3.33	48X10	80-9916	2

BLANK OR
VARIABLE LEGEND

	AREA (SQ. FT)	SIZE (INCHES)	CONN. D.O.T. #	POSTS
	9.0	36	80-9933	1
	16.0	48	80-9934	2

(VARIABLE
LEGEND)

	AREA (SQ. FT)	SIZE (INCHES)	CONN. D.O.T. #	POSTS
	12.5	60X30	80-9928	2
	24.0	72X48	80-9929	2

STAY
IN
LINE

	AREA (SQ. FT)	SIZE (INCHES)	CONN. D.O.T. #	POSTS
	16.0	48	80-9951	2

USE
SHOULDER

	AREA (SQ. FT)	SIZE (INCHES)	CONN. D.O.T. #	POSTS
	16.0	48	80-9956	2

SHOULDER
CLOSED
AHEAD
(1)

SHOULDER
CLOSED
(2)

	AREA (SQ. FT)	SIZE (INCHES)	CONN. D.O.T. #	POSTS
(1)	16.0	48	80-9957	2
(2)	9.0	36	80-9958	1
(2)	16.0	48	80-9959	2

STOP-SLOW PADDLE

SIDE A
*
STOP

SIDE B
*
SLOW

SIDE A
BACKGROUND - RED
COPY & BORDER - WHITE
SIDE B
BACKGROUND - ORANGE
COPY & BORDER - BLACK PLAIN

	AREA (SQ. FT)	SIZE (INCHES)	CONN. D.O.T. #	POSTS
	2.51	19	80-9950	PADDLE

NEW

COPY & BORDER - BLACK
BACKGROUND - YELLOW

	AREA (SQ. FT)	SIZE (INCHES)	CONN. D.O.T. #	POSTS
	2.0	12X24	41-0815	

METRIC CONVERSION CHART
(1" = 25mm)

ENGLISH	METRIC	ENGLISH	METRIC
12"	300	60"	1500
18"	450	66"	1650
24"	600	72"	1800
30"	750	78"	1950
36"	900	84"	2100
42"	1050	90"	2250
48"	1200	96"	2400
54"	1350		

NOTES:

FOR METRIC SEE CONVERSION CHART.
1. R1-SERIES SIGN THE LEGEND "O.S.T.A." SHALL APPEAR.
2. POSTS - SEE STANDARD SHEET TR-1208_02 - "METAL SIGN POSTS AND SIGN MOUNTING DETAILS".
3. POSTS - TYPE A (EXCEPT WHERE NOTED WITH A "B" FOR TYPE B)
4. ALL POSTS NOTED ARE FOR LONG TERM INSTALLATION. SEE STANDARD SHEET TR-1208_02.
5. FOR TEMPORARY SUPPORTS SEE STANDARD SHEET TR-1220_02 - "CONSTRUCTION SIGN SUPPORTS AND CHANNELIZING DEVICES".
6. FOR SPECIFIC SIGN DESIGN, CONTACT CONN. D.O.T., DIVISION OF TRAFFIC ENGINEERING. FOR BOLT HOLE PATTERN REFER TO FHWA PUBLICATION "STANDARD HIGHWAY SIGNS". SIGNS OF DIFFERENT DIMENSIONS TO BE ERECTED ON THE SAME POSTS, OR SPAN/MAST ARM MOUNTED, MAY REQUIRE SPECIAL BOLT HOLE PATTERNS.
7. ALL CONSTRUCTION SIGNS TO BE PAID FOR UNDER THE CONSTRUCTION SIGNS ITEM IN THE CONTRACT.
8. MATERIALS & COLORS SHALL CONFORM TO STATE SPECIFICATIONS

MATERIALS:
SIGNS AND THEIR PORTABLE SUPPORTS SHALL CONFORM TO THE REQUIREMENTS OF NCHRP REPORT 350 (TL-3). ALUMINUM THICKNESS FOR POST MOUNTED SIGNS SHALL BE .100 EXCEPT SIGN #s. 80-9815, 80-9728, 80-9519, & 51-6147 (L OR R) WHICH SHALL BE .125, PLYWOOD THICKNESS FOR POST MOUNTED SIGNS SHALL BE 1/2 " EXTERIOR GRADE A-C OR BETTER. SIGN BLANKS SHALL HAVE ONE COAT OF PRIMER PAINT PRIOR TO APPLICATION OF RETROREFLECTIVE SHEETING & COPY.
ALL COLORS SHALL BE RETROREFLECTIVE WITH THE EXCEPTION OF BLACK WHICH SHALL BE OPAQUE.
COLORS: (UNLESS OTHERWISE SPECIFIED)
LEGEND - BLACK PLAIN
BACKGROUND - ORANGE RETROREFLECTIVE
* SIGNS TO BE "BRIGHT WIDE ANGLE RETROREFLECTIVE SHEETING.

REV.	DATE	REVISION DESCRIPTION
4	6-2012	REVISED NOTE #1 TO REFERENCE "O.S.T.A."
3	4-2012	REVISED NEW SIGNAL SIGN(S) TO CONFORM TO 2009 MUTCD.
2	2-2011	MINOR REVISIONS.
1	3-2010	REMOVED OBSOLETE SIGNS (50-5925, 50-5935).

THE INFORMATION, INCLUDING ESTIMATED QUANTITIES OF WORK, SHOWN ON THESE SHEETS IS BASED ON LIMITED INVESTIGATIONS BY THE STATE AND IS IN NO WAY WARRANTED TO INDICATE THE CONDITIONS OF ACTUAL QUANTITIES OF WORK WHICH WILL BE REQUIRED.

Plotted Date: 7/20/2012

DIMENSIONS ARE IN ENGLISH (.") & METRIC UNITS (mm).
METRIC DIMENSIONS ARE ROUNDED:
- OVER 1" TO NEAREST 5 mm
- UNDER 1" TO NEAREST 1 mm.

NOT TO SCALE

STATE OF CONNECTICUT
DEPARTMENT OF TRANSPORTATION

Filename: CTDOT_TRAFFIC_STD.dgn Model: TR-1220_01

SUBMITTED BY: NAME/DATE/TIME:
Charles S. Harlow 2012.07.24 09:05:45-04'00'
APPROVED BY: NAME/DATE/TIME:
Charles S. Harlow 2012.07.24 09:06:15-04'00'

CTDOT
STANDARD SHEET

OFFICE OF ENGINEERING

STANDARD SHEET TITLE:
SIGNS FOR CONSTRUCTION AND PERMIT OPERATIONS

STANDARD SHEET NO.:
TR-1220_01

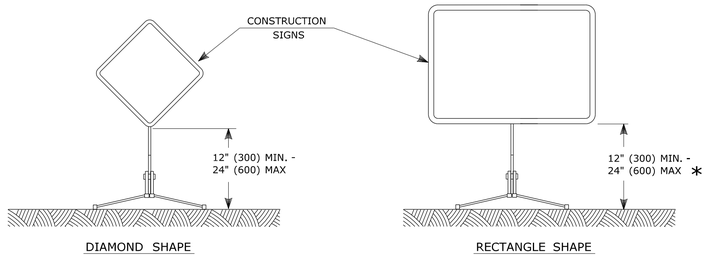

CONSTRUCTION SIGNS

NOTES FOR PORTABLE SIGN SUPPORTS:

1. SIGNS AND THEIR PORTABLE SUPPORTS SHALL CONFORM TO THE REQUIREMENTS OF NCHRP REPORT 350 (TL-3) AND THE LATEST EDITION OF THE MUTCD.
2. MOUNTING HEIGHT OF SIGNS SHALL BE A MINIMUM OF 12" (300) AND A MAXIMUM OF 24" (600). SIGNS SHALL BE MOUNTED HIGHER AS NEEDED TO MEET FIELD CONDITIONS OR AS DIRECTED BY THE ENGINEER.
3. THE ENGINEER RESERVES THE RIGHT TO REJECT ANY SUPPORT DEEMED UNSUITABLE FOR THE PURPOSE INTENDED.
4. PORTABLE SIGN SUPPORTS SHALL BE STABILIZED IN A MANNER THAT WILL NOT AFFECT THEIR COMPLIANCE WITH NCHRP REPORT 350 (TL-3).

* FOR EXIT SIGNS, USE MIN. 72" (1800).

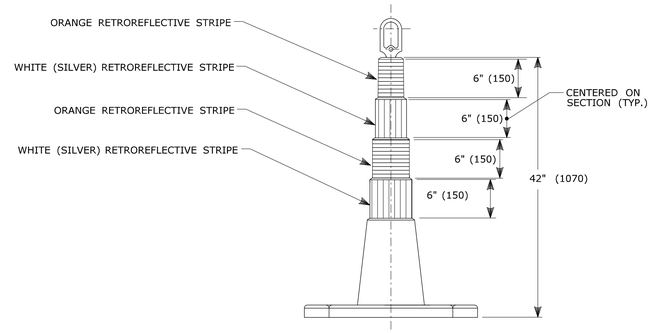

42" (1m) TRAFFIC CONE

NOTES:

1. TRAFFIC CONES SHALL CONFORM TO THE REQUIREMENTS OF NCHRP REPORT 350 (TL-3) AND THE LATEST EDITION OF THE MUTCD.
2. IF RUBBER CONES ARE USED, THEY SHALL HAVE INTERIOR RIBS FOR RIGIDITY.
3. IF PLASTIC CONES ARE USED, THEY SHALL BE COLOR IMPREGNATED.
4. THE ENGINEER RESERVES THE RIGHT TO REJECT ANY CONE DEEMED UNSUITABLE FOR THE PURPOSE INTENDED.

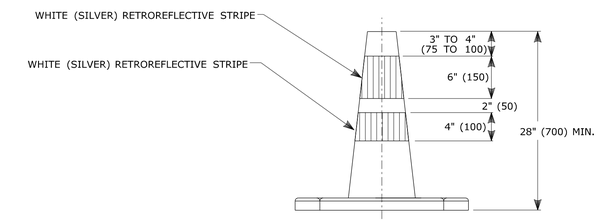

TRAFFIC CONE

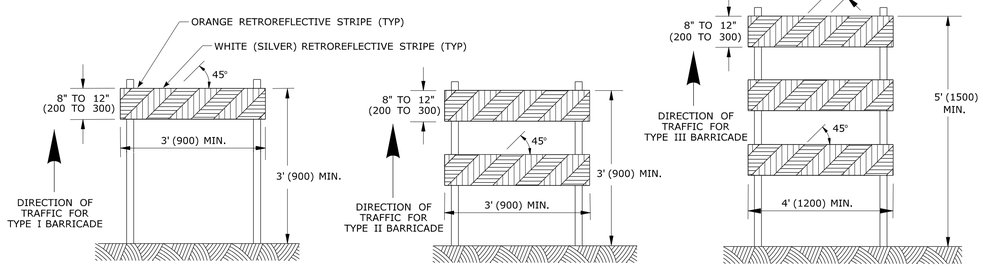

TYPE I BARRICADE **TYPE II BARRICADE** **TYPE III BARRICADE**

CONSTRUCTION BARRICADES

NOTES:

1. CONSTRUCTION BARRICADES SHALL CONFORM TO THE REQUIREMENTS OF NCHRP REPORT 350 (TL-3) AND THE LATEST EDITION OF THE MUTCD.
2. MARKINGS FOR BARRICADE RAILS SHALL BE ALTERNATE ORANGE AND WHITE STRIPES SLOPING DOWNWARD IN THE DIRECTION TRAFFIC IS TO PASS. 6" (150) WIDE STRIPES SHALL BE USED.
3. THE ENTIRE AREA OF ORANGE AND WHITE STRIPES SHALL BE RETROREFLECTIVE SHEETING AS REQUIRED IN THE SPECIFICATIONS. RAILS FOR TYPE I AND TYPE II BARRICADES SHALL BE RETROREFLECTIVE ON BOTH SIDES. WHERE TRAFFIC PASSES ONLY IN ONE DIRECTION OF TRAVEL, ONLY THE SIDE FACING TRAFFIC SHALL BE RETROREFLECTIVE.
4. THE ENGINEER RESERVES THE RIGHT TO REJECT ANY BARRICADE DEEMED UNSUITABLE FOR THE PURPOSE INTENDED.
5. CORNERS OF BARRICADE RAILS SHALL BE ROUNDED.
6. SIGNS MAY ONLY BE INSTALLED ON TYPE III BARRICADES AND SHALL BE PLACED SO AS TO COVER NO MORE THAN ONE BARRICADE RAIL.

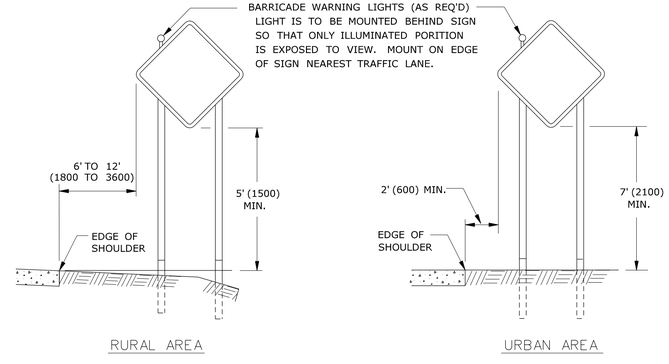

PLACEMENT OF CONSTRUCTION SIGNS TYPICAL LONG TERM INSTALLATION

NOTES:

SUPPORTS SHALL BE METAL SIGN POSTS AND HAVE BREAK-AWAY FEATURES.

SEE TYPICAL SHEETS:
"TYPICAL SIGN SUPPORT AND SIGN PLACEMENT DETAILS-GORE EXIT SIGN"
"TYPICAL METAL SIGN POSTS AND SIGN MOUNTING DETAILS"

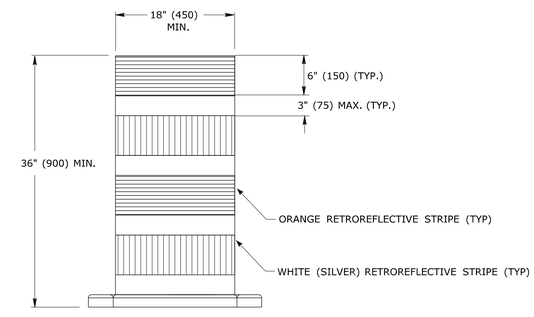

TRAFFIC DRUM FRONT VIEW

NOTES:

1. TRAFFIC DRUM SHALL CONFORM TO THE REQUIREMENTS OF NCHRP REPORT 350 (TL-3) AND THE LATEST EDITION OF THE MUTCD.
2. THE ENGINEER RESERVES THE RIGHT TO REJECT ANY DRUM DEEMED UNSUITABLE FOR THE PURPOSE INTENDED.
3. THE ENTIRE AREA OF ORANGE AND WHITE STRIPES SHALL BE RETROREFLECTIVE SHEETING AS REQUIRED IN THE SPECIFICATIONS.
4. THE SECTIONS OF DRUMS NOT COVERED WITH RETROREFLECTIVE STRIPES SHALL BE ORANGE.

REV.	DATE	REVISION DESCRIPTION
1	2-2011	MINOR REVISIONS.

THE INFORMATION, INCLUDING ESTIMATED QUANTITIES OF WORK, SHOWN ON THESE SHEETS IS BASED ON LIMITED INVESTIGATIONS BY THE STATE AND IS IN NO WAY WARRANTED TO INDICATE THE CONDITIONS OF ACTUAL QUANTITIES OF WORK WHICH WILL BE REQUIRED.

Plotted Date: 2/16/2011

DIMENSIONS ARE IN ENGLISH (.") & METRIC UNITS (mm).
METRIC DIMENSIONS ARE ROUNDED:
- OVER 1" TO NEAREST 5 mm
- UNDER 1" TO NEAREST 1 mm.

NOT TO SCALE

STATE OF CONNECTICUT
DEPARTMENT OF TRANSPORTATION

Filename: CTDOT_TRAFFIC_STD.dgn Model: TR-1220_02

SUBMITTED BY: NAME/DATE/TIME: Charles S. Harlow 2011.02.22 11:16:41 -05'00'

APPROVED BY: NAME/DATE/TIME: John F. Carey 2011.03.02 09:24:06 -05'00'

CTDOT STANDARD SHEET

OFFICE OF ENGINEERING

STANDARD SHEET TITLE: CONSTRUCTION SIGN SUPPORTS AND CHANNELIZING DEVICES

STANDARD SHEET NO.: TR-1220_02