***ONLY STANDARD SHEETS MARKED WITH AN "✓" ARE IN THIS PROJECT #** 109-172

****REVISED OR ADDED**

✓*	SHEET NO.	TITLE	APPROVAL DATE**
	HW-506_01	ENDWALLS, SLOPE PAVED INLETS AND OUTLETS	1-26-12
	HW-506_02	TYPE "D-G" & "L" ENDWALLS	7-13-12
	HW-506_03	ENDWALLS FOR PIPE ARCH	9-18-09
	HW-507_01	TYPE "C", "C-L" & DROP INLET CATCH BASIN	7-24-13
	HW-507_02	TYPE "C", "C-L" & DOUBLE GRATE TYPE - I	7-24-13
	HW-507_03	TYPE "C", "C-L" & DOUBLE GRATE TYPE - II	7-24-13
	HW-507_04	TYPE "C", "C-L" & ROUND PRECAST CONCRETE CB	11-10-11
	HW-507_05	TYPE "C" & "C-L" PRECAST CONCRETE CB DOUBLE GRATE TYPE - I	11-10-11
	HW-507_06	TYPE "C" & "C-L" PRECAST CONCRETE CB DOUBLE GRATE TYPE - II	11-10-11
	HW-507_07	TYPE "C" & "C-L" CATCH BASIN TOPS AND CURBS	11-10-11
✓	HW-507_08	CATCH BASIN FRAMES AND GRATES	9-18-09
	HW-507_09	HEAVY DUTY LOCK DOWN TOPS	7-12-12
	HW-507_10	MANHOLE - FRAME & COVER	7-24-13
	HW-601_01	FIGURES FOR DATES ON BRIDGE PARAPETS	6-09-11
	HW-651_01	C.C.M. PIPE INSTALLATIONS IN FILL & ROCK SLOPES & PIPE TRENCH DETAIL	7-24-13
	HW-651_02	SLOTTED DRAIN PIPE 12"- 15"-18"-24"-30" (305-381-457-610-762)	7-12-12
	HW-652_01	PIPE ENDS	7-24-13
	HW-751_01	UNDERDRAINS AND UNDERDRAIN OUTLETS	7-12-12
	HW-803_01	PAVED DITCH AND PAVED APRON	7-12-12
	HW-811_01	CURBING	7-12-12
	HW-813_01	GRANITE STONE TRANSITION CURBING	7-24-13
	HW-821_01a	TRANSITION 45" (1145) F-SHAPE TO 45" (1145) VERTICAL SHAPE SHEET 1	1-26-12
	HW-821_01b	TRANSITION 45" (1145) F-SHAPE TO 45" (1145) VERTICAL SHAPE SHEET 2	10-18-10
	HW-821_01c	TRANSITION 45" (1145) F-SHAPE TO 45" (1145) VERTICAL SHAPE SHEET 3	1-26-12
✓	HW-821_02a	45" (1145) F-SHAPE PRECAST CONCRETE BARRIER CURB SHEET 1	7-24-13
✓	HW-821_02b	45" (1145) F-SHAPE PRECAST CONCRETE BARRIER CURB SHEET 2	7-24-13
	HW-821_03a	TRANSITION - 32" (813) JERSEY SHAPE TO 45" (1145) VERTICAL SHAPE SHEET 1	1-26-12
	HW-821_03b	TRANSITION - 32" (813) JERSEY SHAPE TO 45" (1145) VERTICAL SHAPE SHEET 2	10-18-10
	HW-821_03c	TRANSITION - 32" (813) JERSEY SHAPE TO 45" (1145) VERTICAL SHAPE SHEET 3	10-18-10
	HW-821_03d	TRANSITION - 32" (813) JERSEY SHAPE TO 45" (1145) VERTICAL SHAPE SHEET 4	10-18-10
	HW-821_03e	TRANSITION - 32" (813) JERSEY SHAPE TO 45" (1145) F-SHAPE	7-24-13
	HW-821_04a	MERRITT PARKWAY NARROW MEDIAN BARRIER	6-09-11
	HW-821_04b	MERRITT PARKWAY - 2' (610) WIDE MEDIAN BARRIER AND ROADSIDE BARRIER	7-24-13

✓*	SHEET NO.	TITLE	APPROVAL DATE**
	HW-821_05a	TRANSITION - 45" (1145) F-SHAPE TO 54" (1372) VERTICAL SHAPE SHEET 1	1-26-12
	HW-821_05b	TRANSITION - 45" (1145) F-SHAPE TO 54" (1372) VERTICAL SHAPE SHEET 2	1-26-12
	HW-821_06	54" (1372) VERTICAL SHAPE BARRIER	2-6-12
	HW-821_07	MISCELLANEOUS DETAILS FOR BARRIER TRANSITIONS	7-12-12
✓	HW-822_01	TEMPORARY PRECAST CONCRETE BARRIER CURB	7-24-13
	HW-905_01	FENCES AND BARWAYS	7-13-12
✓	HW-910_01	W- BEAM METAL BEAM RAIL HARDWARE	6-09-11
✓	HW-910_02	METAL BEAM RAIL (TYPE R-B 350) GUIDERAIL	6-09-11
	HW-910_03	METAL BEAM RAIL (TYPE MD-B 350)	6-09-11
	HW-910_04	METAL BEAM RAIL (TYPE R-B 350) SYSTEMS 5, 5A, & 6	6-09-11
	HW-910_05	METAL BEAM RAIL R-B 350 SPAN TYPE I, II, III SECTIONS	7-24-13
✓	HW-910_06	R-B 350 BRIDGE ATTACHMENT SAFETY SHAPE PARAPET	6-09-11
	HW-910_07	R-B 350 BRIDGE ATTACHMENT VERTICAL SHAPE PARAPET	6-09-11
✓	HW-910_08	R-B 350 BRIDGE ATTACHMENT TRAILING END	6-09-11
	HW-910_09a	MISCELLANEOUS GUIDERAIL TRANSITIONS SHEET 1	1-26-12
	HW-910_09b	MISCELLANEOUS GUIDERAIL TRANSITIONS SHEET 2	7-25-12
	HW-910_10	METAL BEAM RAIL 8" (203) X 6" (152) BOX BEAM	7-24-13
	HW-910_11	CURVED GUIDERAIL TREATMENT DETAIL	7-25-12
	HW-910_12a	MERRITT PARKWAY GUIDERAIL ATTACHMENT - SYSTEM 2 & 3	7-24-13
	HW-910_12b	MERRITT PARKWAY GUIDERAIL	7-24-13
	HW-910_12c	MERRITT PARKWAY GUIDERAIL TRAILING END ATTACHMENTS	7-24-13
	HW-910_12d	MERRITT PARKWAY MEDIAN GUIDERAIL AND END ANCHOR	6-09-11
	HW-910_13a	THRIE-BEAM METAL BEAM RAIL HARDWARE	7-24-13
	HW-910_13b	THRIE-BEAM TRANSITIONS	7-24-13
	HW-910_14a	THRIE-BEAM 350 BRIDGE ATTACHMENT	6-09-11
	HW-910_14b	THRIE-BEAM 350 GUIDERAIL TRANSITION TO R-B 350 GUIDERAIL	6-09-11
	HW-910_15	MD-B 350 MEDIAN BARRIER SAFETY SHAPE ATTACHMENT TYPE I	6-09-11
	HW-910_16	MD-B 350 MEDIAN BARRIER SAFETY SHAPE ATTACHMENT TYPE II	6-09-11
	HW-910_17	R-B TERMINAL SECTION	7-24-13
	HW-910_18	METAL BEAM RAIL (TYPE MD-I)	10-18-10
	HW-910_19a	METAL BEAM RAIL (MODIFIED TYPE R-I) AND END ANCHORAGE TYPE I	7-24-13
	HW-910_19b	METAL BEAM RAIL (MODIFIED TYPE R-I) AND END ANCHORAGE TYPE II	7-24-13
	HW-910_19c	METAL BEAM RAIL (MODIFIED TYPE R-I) SYSTEMS 2 AND 3	7-24-13

REV.	DATE	REVISION DESCRIPTION
-	-	-
-	-	-
-	-	-
-	-	-
-	-	-
1	7-24-13	REVISED 23 SHEETS

THE INFORMATION, INCLUDING ESTIMATED QUANTITIES OF WORK, SHOWN ON THESE SHEETS IS BASED ON LIMITED INVESTIGATIONS BY THE STATE AND IS IN NO WAY WARRANTED TO INDICATE THE CONDITIONS OF ACTUAL QUANTITIES OF WORK WHICH WILL BE REQUIRED.

Plotted Date: 7/25/2013

NOT TO SCALE

STATE OF CONNECTICUT
DEPARTMENT OF TRANSPORTATION

Filename: CTDOT_HIGHWAY_STD2013.dgn Model: 1 - HW-INX_1

Andrew Lessard
2015.07.15
14:46:48-04'00'

CTDOT
STANDARD SHEET

OFFICE OF ENGINEERING

STANDARD SHEET TITLE:

HIGHWAY
STANDARD SHEET INDEX

STANDARD SHEET NO.:

HW_INX

*ONLY STANDARD SHEETS MARKED WITH AN "✓" ARE IN THIS PROJECT #

**REVISED OR ADDED

✓*	SHEET NO.	TITLE	APPROVAL DATE**
✔	HW-911_01	R-B END ANCHORAGE TYPE I AND II	7-24-13
	HW-911_02	MD-B END ANCHORAGE TYPE I	10-18-10
	HW-911_03	ANCHOR IN EARTH CUT SLOPE & ANCHOR IN ROCK CUT SLOPE	10-18-10
	HW-911_04	TYPICAL GRADING PLAN FOR W-BEAM GUIDERAIL TURN-DOWN END ANCHOR	10-18-10
	HW-911_05	MERRITT PARKWAY GUIDERAIL END ANCHORS	7-24-13
	HW-913_01	CHAIN LINK FENCE	7-12-12
	HW-918_01a	THREE CABLE GUIDERAIL (I-BEAM POSTS) SHEET 1	7-24-13
	HW-918_01b	THREE CABLE GUIDERAIL (I-BEAM POSTS) SHEET 2	1-26-12
	HW-918_01c	THREE CABLE GUIDERAIL (I-BEAM POSTS) SHEET 3	7-24-13
	HW-921_01	DRIVEWAY RAMPS AND SIDEWALKS	1-26-12
	HW-925_01	PAVEMENT FOR RAILING	6-09-11
	HW-949_01	PLANTING DETAILS FOR TREES	7-12-12
	HW-949_02	PLANTING DETAILS FOR SHRUBS	7-12-12
	HW-1800_01	GRADING PLAN FOR TYPE B IMPACT ATTENUATION SYSTEM (FLARED)	6-20-11
	HW-1800_02	GRADING PLAN FOR TYPE B IMPACT ATTENUATION SYSTEM (MEDIAN/GORE)	6-09-11
	HW-1800_03	GRADING PLAN FOR TYPE B IMPACT ATTENUATION SYSTEM (TANGENTIAL)	6-20-11
✔	HW-1806_01a	CT TRUCK MOUNTED IMPACT ATTENUATOR SHEET 1	10-18-10
✔	HW-1806_01b	CT TRUCK MOUNTED IMPACT ATTENUATOR SHEET 2	10-18-10
✔	HW-1806_01c	CT TRUCK MOUNTED IMPACT ATTENUATOR SHEET 3	10-18-10

✓*	SHEET NO.	TITLE	APPROVAL DATE**

REV.	DATE	REVISION DESCRIPTION
-	-	-
-	-	-
-	-	-
-	-	-
-	-	-
1	7/24/13	REVISED 8 SHEETS

THE INFORMATION, INCLUDING ESTIMATED QUANTITIES OF WORK, SHOWN ON THESE SHEETS IS BASED ON LIMITED INVESTIGATIONS BY THE STATE AND IS IN NO WAY WARRANTED TO INDICATE THE CONDITIONS OF ACTUAL QUANTITIES OF WORK WHICH WILL BE REQUIRED.

Plotted Date: 8/29/2014

NOT TO SCALE

STATE OF CONNECTICUT
DEPARTMENT OF TRANSPORTATION

Filename: CTDOT_HIGHWAY_STD.dgn Model: 2 - HW-INX_2

CTDOT
STANDARD SHEET

OFFICE OF ENGINEERING

STANDARD SHEET TITLE:

HIGHWAY
STANDARD SHEET INDEX

STANDARD SHEET NO.:

HW_INX
2 of 2

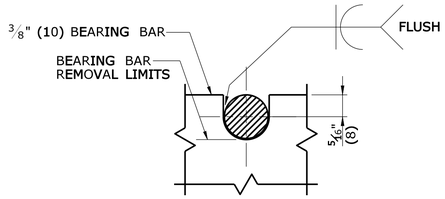

NOTE:
5/8" (16) DIA. ROUND BAR SHALL CONTACT BEARING BAR AT BOTTOM AND BE FLUSH AT TOP.

ROUND BAR ATTACHMENT
CATCH BASIN GRATE TYPE A

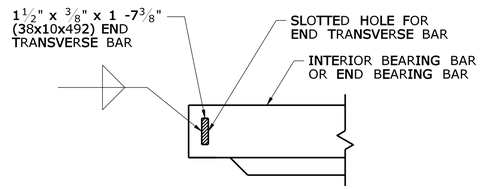

END TRANSVERSE BAR ATTACHMENT
CATCH BASIN GRATE TYPE A & B

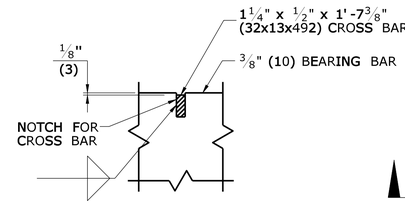

CROSS BAR ATTACHMENT
CATCH BASIN GRATE TYPE B

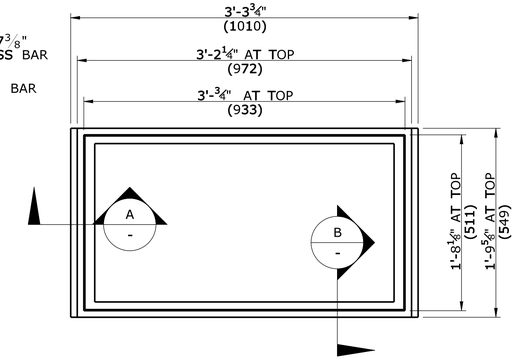

PLAN

GENERAL NOTES:

1. STEEL OR CAST IRON SHALL BE USED FOR FRAMES. STEEL SHALL BE USED FOR TYPE "A" & "B" GRATES.
2. TYPE "A" GRATES SHALL BE USED ON ALL ROADWAYS WHERE BICYCLE TRAFFIC IS ALLOWED OR AS DIRECTED BY THE ENGINEER.
3. TYPE "B" GRATES SHALL BE USED ON ALL LIMITED ACCESS HIGHWAYS, RAMPS AND WHERE BICYCLE TRAFFIC IS NOT ALLOWED OR AS DIRECTED BY THE ENGINEER.
4. STEEL FRAMES AND GRATES SHALL BE GALVANIZED IN ACCORDANCE WITH ARTICLE M.06.03.
5. DO NOT GALVANIZE CAST IRON FRAMES.
6. DIMENSIONAL TOLERANCES SHALL BE ±1/16".(1.6)
7. ALL STEEL BARS SHALL BE WELDED AT ALL INTERSECTIONS.
8. ALL WELDING SHALL CONFORM TO THE REQUIREMENTS OF AWS STRUCTURAL WELDING CODE, D1.1.

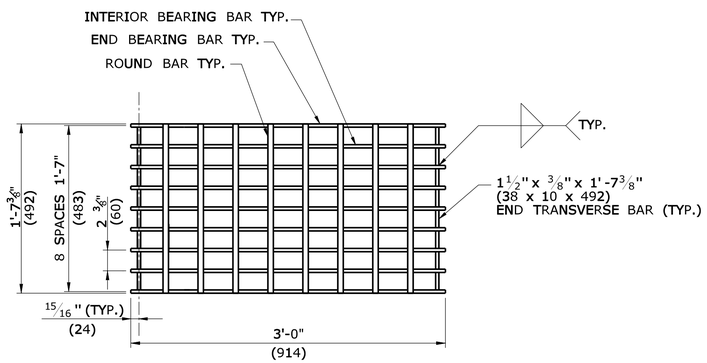

PLAN

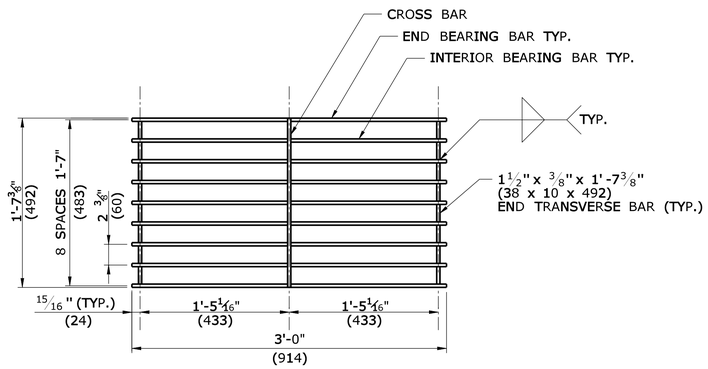

PLAN

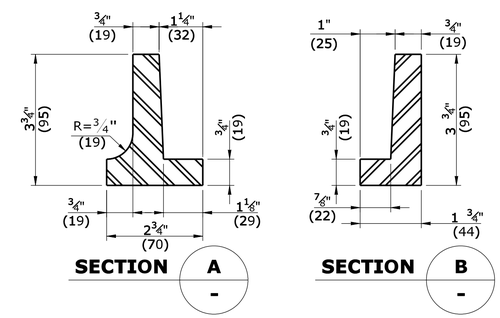

CAST IRON FRAME ALTERNATE

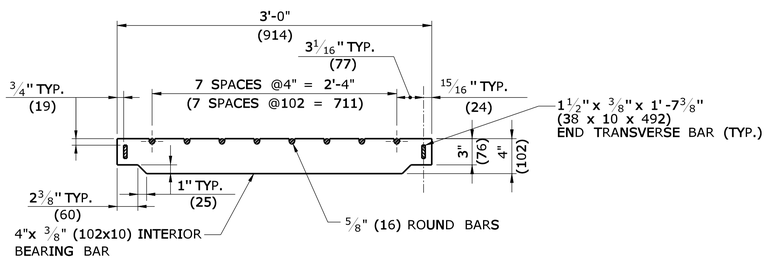

ELEVATION- INTERIOR BEARING BAR

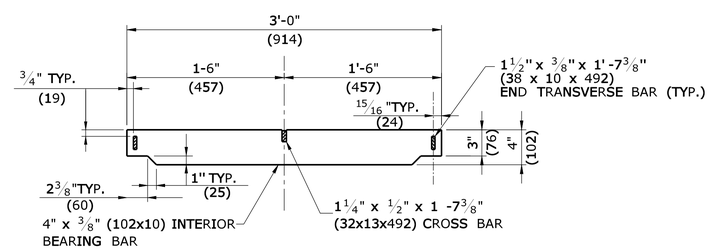

ELEVATION- INTERIOR BEARING BAR

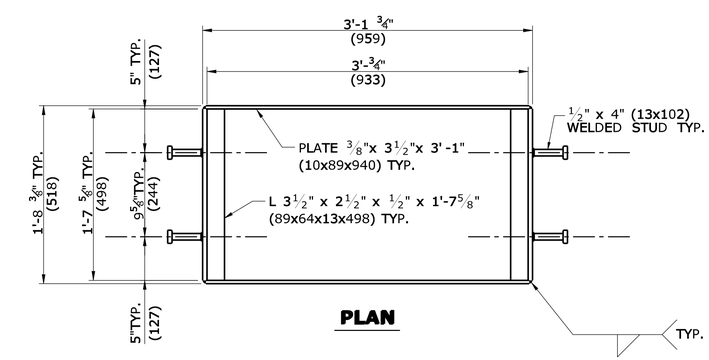

PLAN

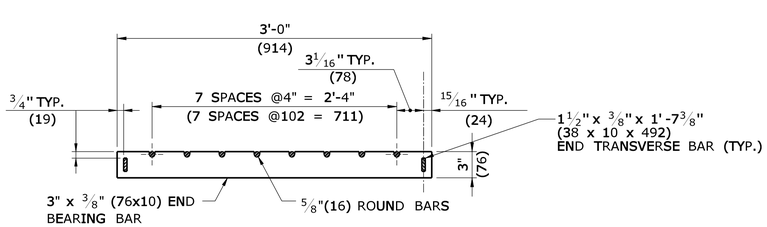

ELEVATION- END BEARING BAR
CATCH BASIN GRATE TYPE A

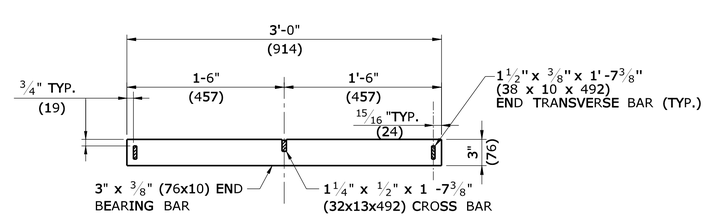

ELEVATION- END BEARING BAR
CATCH BASIN GRATE TYPE B

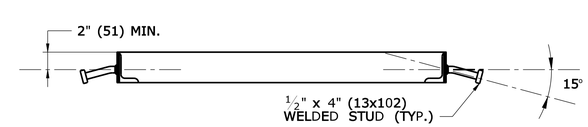

WELDED STUD ANCHOR DETAILS
STEEL FRAME

ALL METRIC DIMENSIONS ARE IN MILLIMETERS (mm) UNLESS OTHERWISE NOTED

REV.	DATE	REVISION DESCRIPTION
-	-	-
-	-	-
-	-	-
-	-	-
-	-	-
-	-	-

THE INFORMATION, INCLUDING ESTIMATED QUANTITIES OF WORK, SHOWN ON THESE SHEETS IS BASED ON LIMITED INVESTIGATIONS BY THE STATE AND IS IN NO WAY WARRANTED TO INDICATE THE CONDITIONS OF ACTUAL QUANTITIES OF WORK WHICH WILL BE REQUIRED.

Plotted Date: 9/11/2009

NOT TO SCALE

STATE OF CONNECTICUT
DEPARTMENT OF TRANSPORTATION

Filename: CTDOT_HIGHWAY_STD.dgn Model: HW-507_08

SUBMITTED BY: NAME/DATE/TIME: Timothy M. Wilson 2009.09.16 11:16:32 -04'00'

APPROVED BY: NAME/DATE/TIME: James H. Norman 2009.09.18 14:22:33 -04'00'

CTDOT STANDARD SHEET

OFFICE OF ENGINEERING

STANDARD SHEET TITLE: CATCH BASIN FRAMES AND GRATES

STANDARD SHEET NO.: HW-507_08

GENERAL NOTES:

1. ALTERNATE DESIGNS FOR THE FOLLOWING ITEMS MAY BE SUBSTITUTED TO THE ENGINEER FOR APPROVAL :
   A) UNIT END CONNECTIONS SIMILAR TO DESIGNS SHOWN.
   B) LIFTING KEYS OR OTHER HANDLING DEVICES.

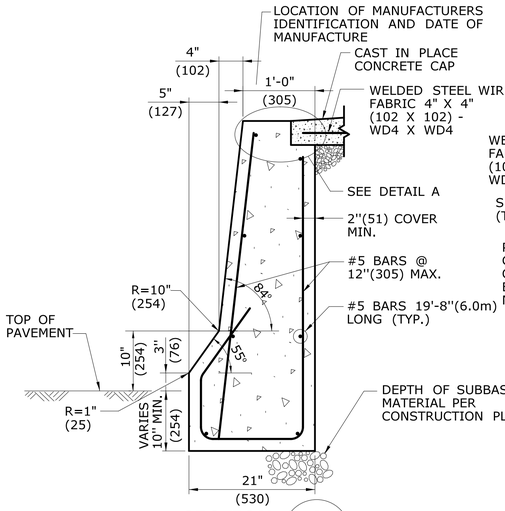

SECTION A -

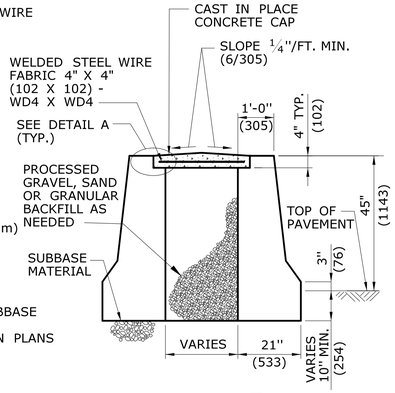

SECTION B -

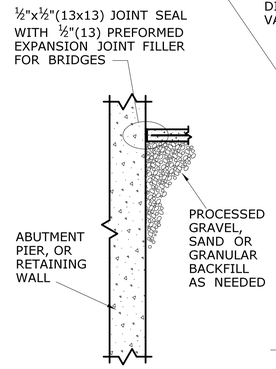

SECTION C -

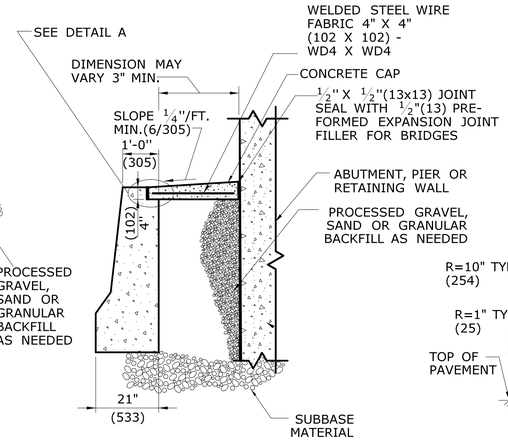

SECTION D -

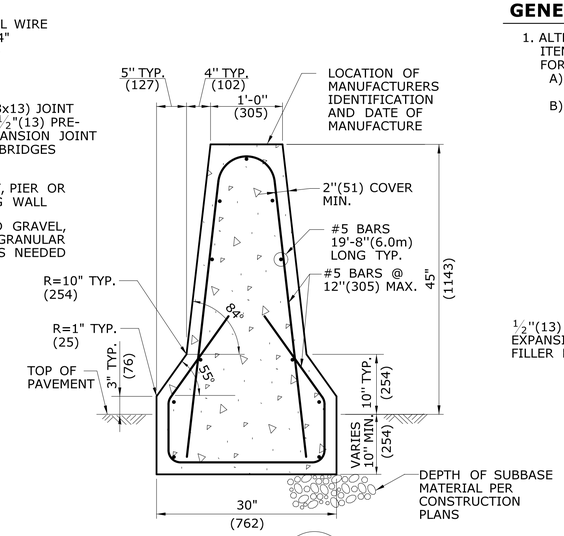

SECTION E -

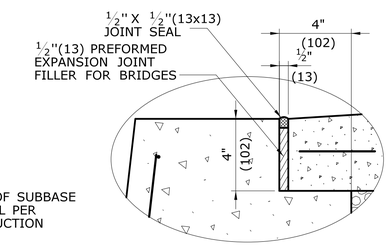

DETAIL A

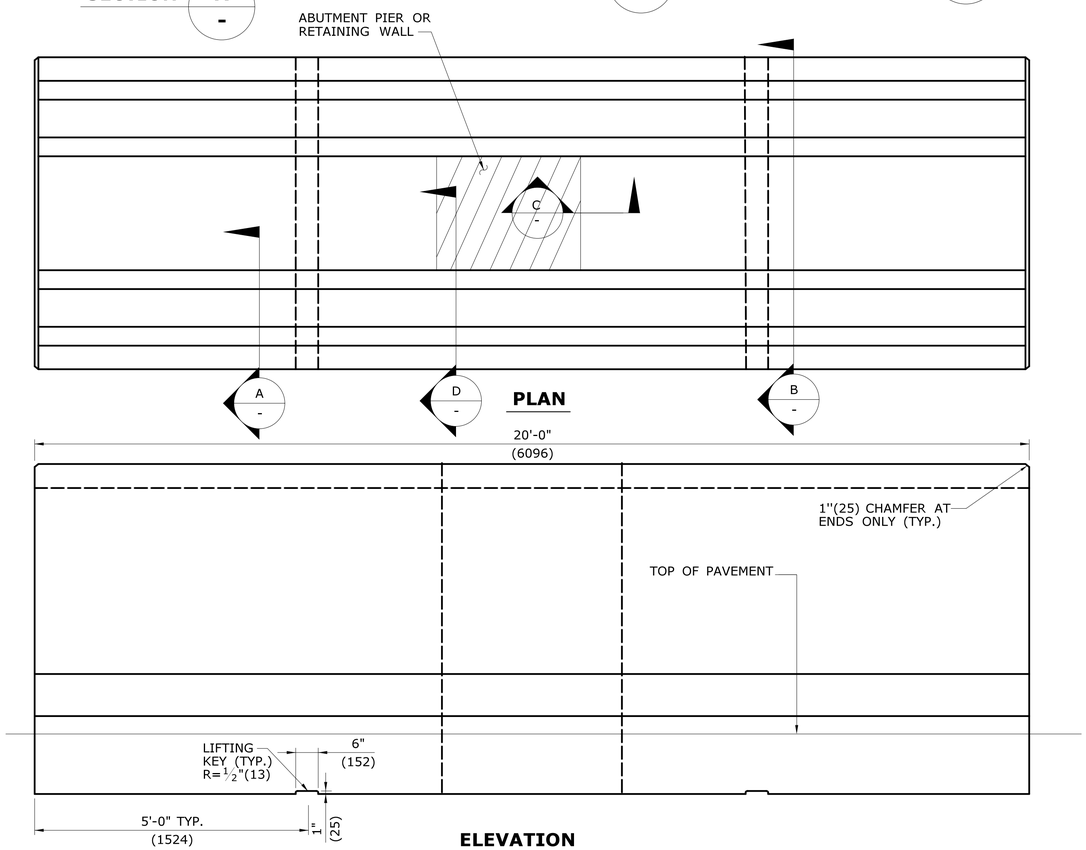

PLAN

ELEVATION

21" x 45"(530x1145) PRECAST CONCRETE BARRIER CURB UNIT AT PIER ABUTMENT OR RETAINING WALL

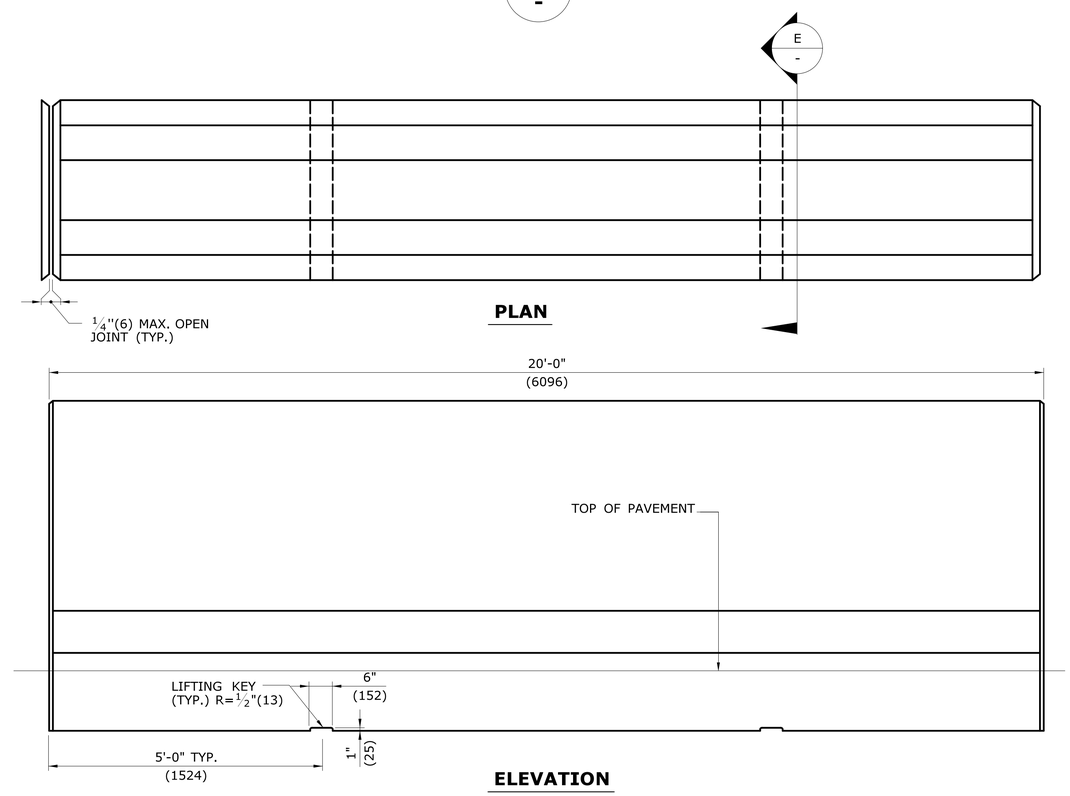

PLAN

ELEVATION

30" x 45"(755 x1145) PRECAST CONCRETE BARRIER CURB UNIT

ALL METRIC DIMENSIONS ARE IN MILLIMETERS (mm) UNLESS OTHERWISE NOTED.

REV.	DATE	REVISION DESCRIPTION
1	5/13/10	REVISE GENERAL NOTE 2 AND ADD NOTE 3
2	1/12	REVISE GENERAL NOTES
3	1/12	ENLARGE PLANS & ELEVATIONS, ADD SHEET 2b FOR GUIDERAIL
-	-	ATTACHMENTS
4	7/13	ERRATA - SPELLING

THE INFORMATION, INCLUDING ESTIMATED QUANTITIES OF WORK, SHOWN ON THESE SHEETS IS BASED ON LIMITED INVESTIGATIONS BY THE STATE AND IS IN NO WAY WARRANTED TO INDICATE THE CONDITIONS OF ACTUAL QUANTITIES OF WORK WHICH WILL BE REQUIRED.

Plotted Date: 3/21/2013

NOT TO SCALE

STATE OF CONNECTICUT
DEPARTMENT OF TRANSPORTATION

Filename: June2013.dgn Model: HW-821_02a

SUBMITTED BY: NAME/DATE/TIME: Digitally signed by Leo L. Fontaine Date: 2013.07.24 11:00:56-04'00'

APPROVED BY: NAME/DATE/TIME: James H. Norman 2013.07.24 14:45:55-04'00'

CTDOT STANDARD SHEET

OFFICE OF ENGINEERING

STANDARD SHEET TITLE:

45" (1145) F- SHAPE PRECAST CONCRETE BARRIER CURB

STANDARD SHEET NO.: **HW-821_02a**

GENERAL NOTES:

1. GUIDERAIL ATTACHMENT WHEN REQUIRED SHALL BE CONSTRUCTED AS SHOWN ON THE PLANS OR AS DIRECTED BY THE ENGINEER.
2. WHEN ATTACHING GUIDERAIL, THE END OF THE PCBC SHALL NOT EXTEND VERTICALLY MORE THAN 3" (76) ABOVE THE RAIL HEIGHT FOR ALL LEADING END TREATMENTS. A 2.5:1 MAX. SLOPE OF THE BARRIER MAY BE USED TO ACCOMPLISH THIS.

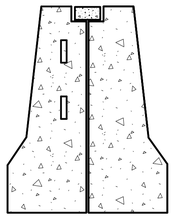

SECTION F - F -

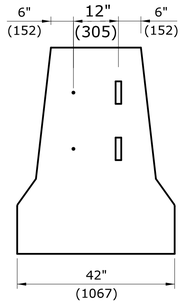

VIEW G (ROTATED)

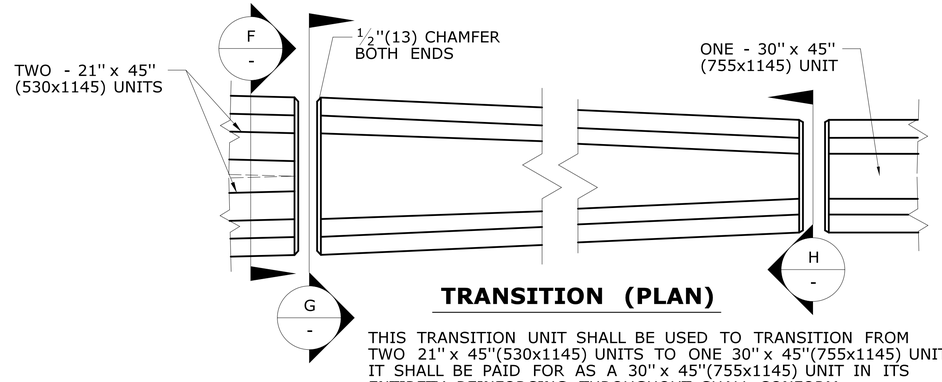

TRANSITION (PLAN)

THIS TRANSITION UNIT SHALL BE USED TO TRANSITION FROM TWO 21" x 45"(530x1145) UNITS TO ONE 30" x 45"(755x1145) UNIT. IT SHALL BE PAID FOR AS A 30" x 45"(755x1145) UNIT IN ITS ENTIRETY. REINFORCING THROUGHOUT SHALL CONFORM TO THAT OF A 30" x 45"(755x1145) UNIT.

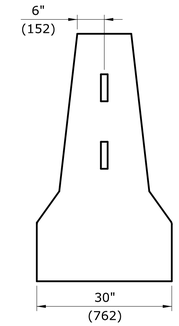

VIEW H (ROTATED)

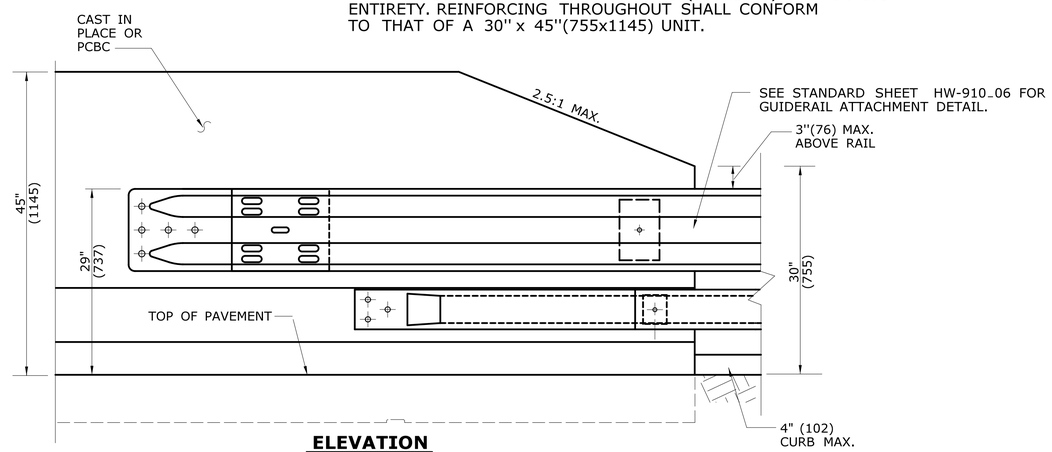

ELEVATION
CONCRETE BARRIER CURB UNIT
END TRANSITION TO GUIDERAIL

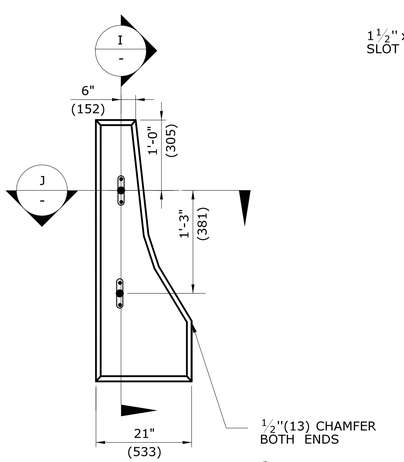

21" x 45"(530x1145) UNIT

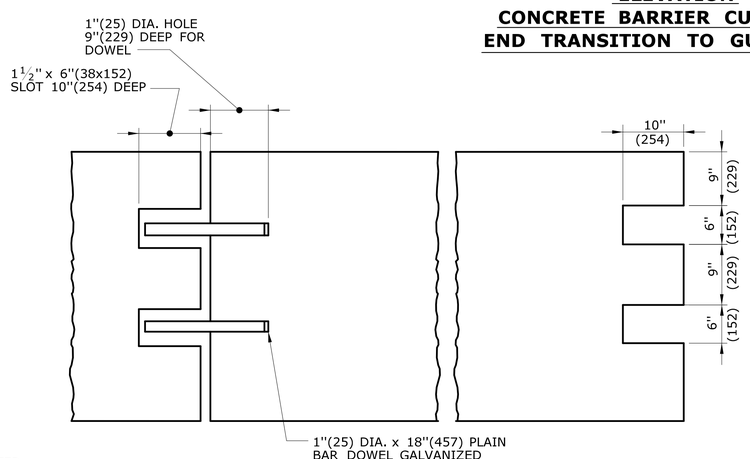

SECTION I - I - K - K -

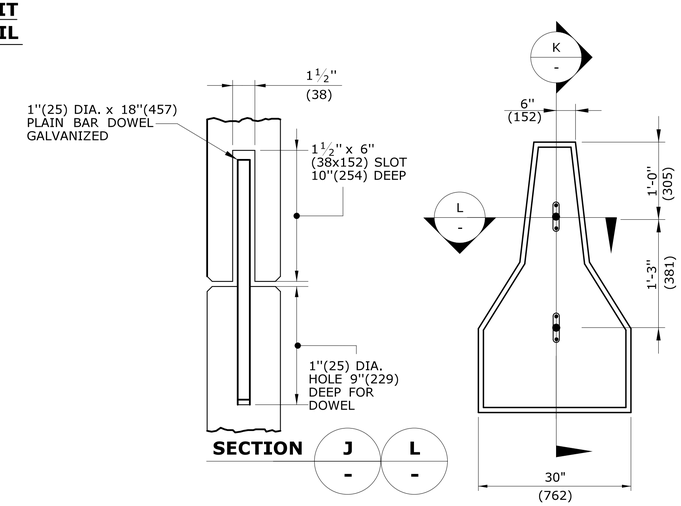

SECTION J - J - L - L -

30" x 45"(755x1145) UNIT

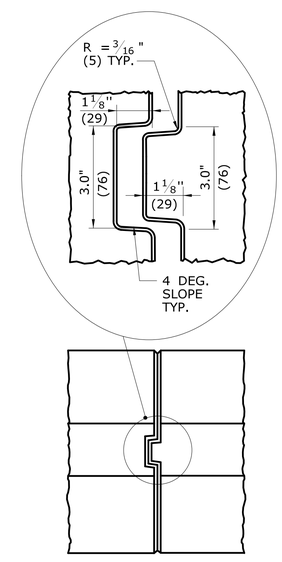

PLAN VIEW 30" x 45" (755x1145) UNIT ALTERNATE CONNECTION AT ENDS

ALL METRIC DIMENSIONS ARE IN MILLIMETERS (mm) UNLESS OTHERWISE NOTED

REV.	DATE	REVISION DESCRIPTION
1	5/13/10	REVISE GENERAL NOTE 2 AND ADD NOTE 3
2	1/12	ADD DETAIL FOR GUIDERAIL ATTACHMENT
3	7/13	ERRATA - REMOVE SECTION
-	-	-
-	-	-
-	-	-

THE INFORMATION, INCLUDING ESTIMATED QUANTITIES OF WORK, SHOWN ON THESE SHEETS IS BASED ON LIMITED INVESTIGATIONS BY THE STATE AND IS IN NO WAY WARRANTED TO INDICATE THE CONDITIONS OF ACTUAL QUANTITIES OF WORK WHICH WILL BE REQUIRED.

Plotted Date: 6/14/2013

NOT TO SCALE

STATE OF CONNECTICUT
DEPARTMENT OF TRANSPORTATION

Filename: CTDOT_HIGHWAY_STD2013.dgn Model: 28 - HW-821_02b

SUBMITTED BY: NAME/DATE/TIME: Digitally signed by Leo L. Fontaine Date: 2013.07.24 11:00:41-04'00'

APPROVED BY: NAME/DATE/TIME: James H. Norman 2013.07.24 14:46:40-04'00'

CTDOT STANDARD SHEET

OFFICE OF ENGINEERING

STANDARD SHEET TITLE:

45" (1145) F- SHAPE PRECAST CONCRETE BARRIER CURB

STANDARD SHEET NO.: **HW-821_02b**

GENERAL NOTES:

1. ALTERNATE DESIGNS FOR LIFTING KEYS, HOLES OR OTHER HANDLING DEVICES MAY BE SUBMITTED TO THE ENGINEER FOR APPROVAL.
2. EXPECTED PERMANENT DYNAMIC DEFLECTION IS 3'-6" (1148) BASED ON TL-3 CRASH TESTS WITH 240' (73152) OF TPCBC.

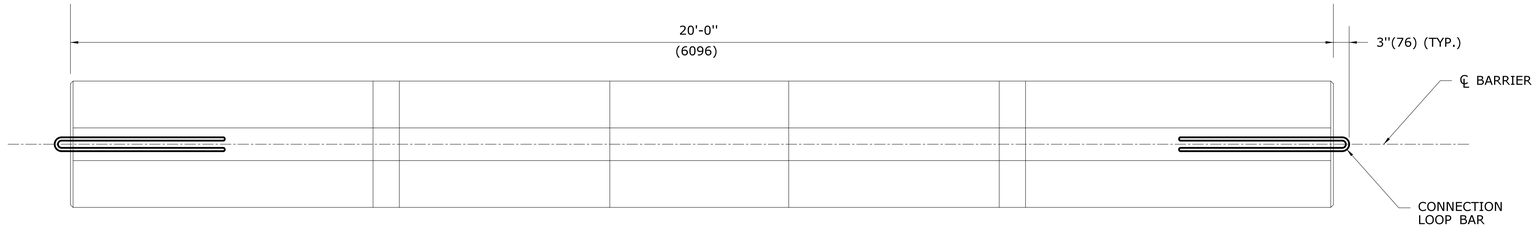

PLAN

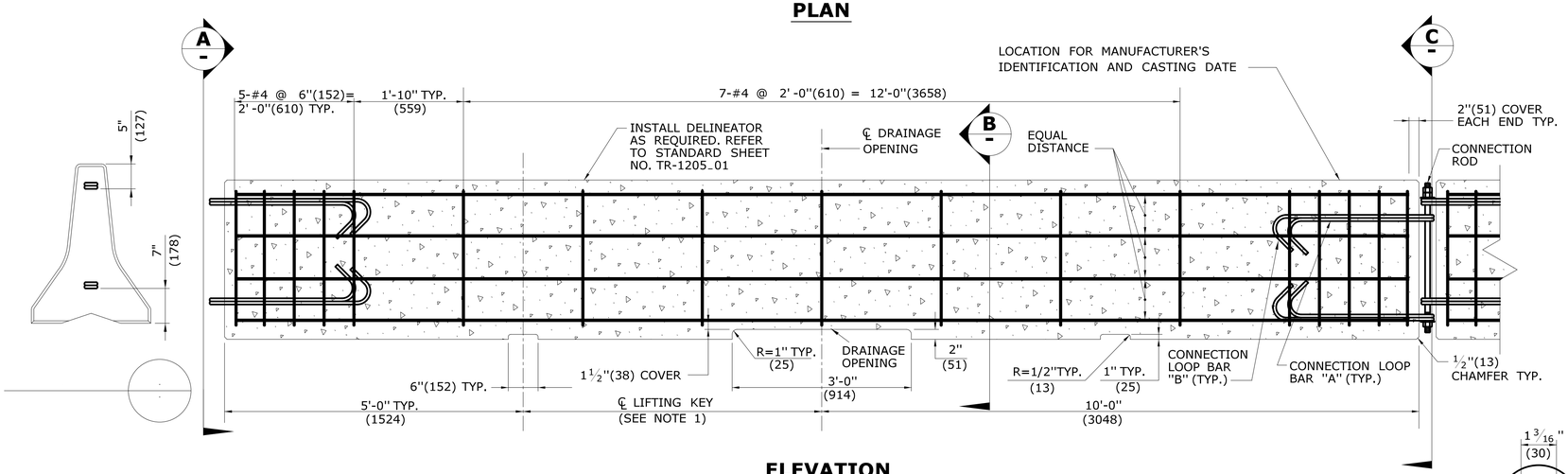

ELEVATION

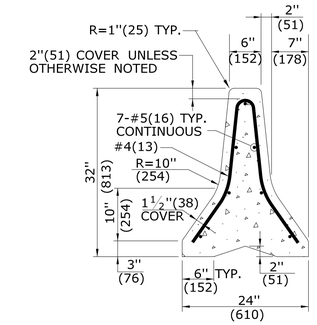

SECTION B

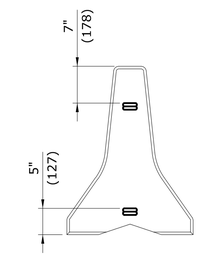

END VIEW C

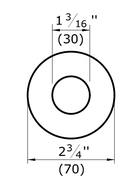

WASHER DETAIL

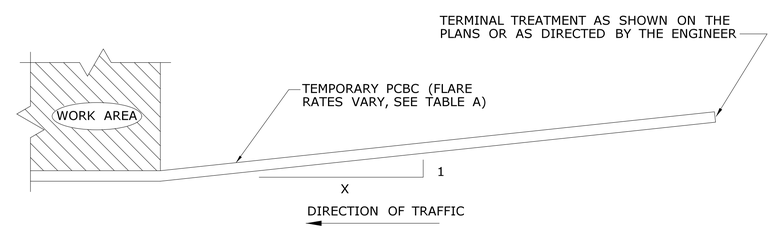

PLAN - TYPICAL INSTALLATION

TABLE A

FLARE RATES

* SPEED	FLARE RATE (X : 1)
≤ 30MPH(48KPH)	4 : 1
> 30MPH(48KPH) <45MPH(72KPH)	6 : 1
≥ 45MPH(72KPH) NON-LIMITED ACCESS HIGHWAYS	8 : 1
ALL LIMITED ACCESS HIGHWAYS	10 : 1

* DESIGN SPEED THROUGH THE WORK AREA.

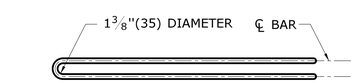

PLAN

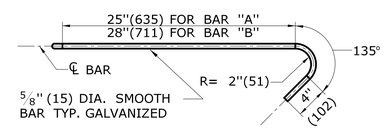

ELEVATION

BAR "A" = 6'-0"(1829) TOTAL
BAR "B" = 6'-6"(1981) TOTAL

CONNECTION LOOP BAR

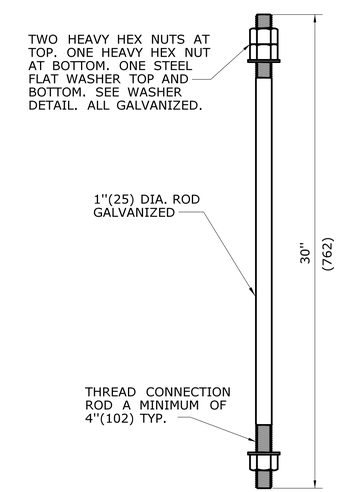

CONNECTION ROD

ALL METRIC DIMENSIONS ARE IN MILLIMETERS (mm) UNLESS OTHERWISE NOTED.

1	3/12	REVISE SLOPE NOTE & DETAIL NOTE	
2	7/13	ERRATA	-
-	-	-	-
-	-	-	-
-	-	-	-
-	-	-	-
-	-	-	-

THE INFORMATION, INCLUDING ESTIMATED QUANTITIES OF WORK, SHOWN ON THESE SHEETS IS BASED ON LIMITED INVESTIGATIONS BY THE STATE AND IS IN NO WAY WARRANTED TO INDICATE THE CONDITIONS OF ACTUAL QUANTITIES OF WORK WHICH WILL BE REQUIRED.

NOT TO SCALE

STATE OF CONNECTICUT
DEPARTMENT OF TRANSPORTATION

NAME/DATE/TIME: Digitally signed by Leo L. Fontaine Date: 2013.07.24 11:00:01-04'00'

APPROVED BY: NAME/DATE/TIME: James H. Norman 2013.07.24 14:48:34-04'00'

CTDOT STANDARD SHEET

OFFICE OF ENGINEERING

TEMPORARY PRECAST CONCRETE BARRIER CURB

HW-822_01

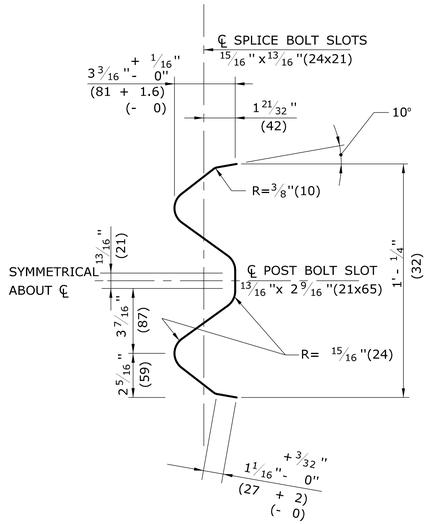

SELECTION THRU RAIL ELEMENT END VIEW

NOTE: ALL DIMENSIONS SUBJECT TO MANUFACTURING TOLERANCES

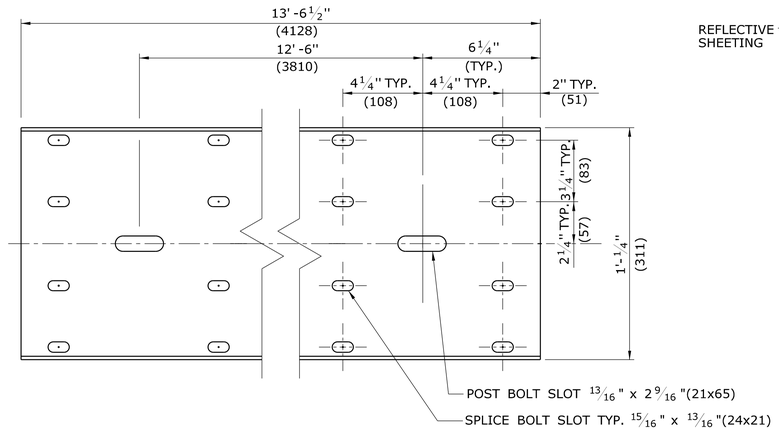

TYPICAL W-BEAM RAIL ELEMENT CLASS A, TYPE II

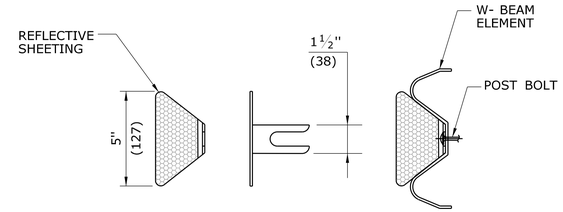

DELINEATOR DETAIL

GENERAL NOTES:

1. NEW R-B 350 GUIDERAIL INCLUDING SYSTEMS, ANCHORS AND TRANSITIONS INSTALLED ON EXPRESSWAYS AND RAMPS SHALL USE CLASS B TYPE II (10 GAUGE) W-BEAM RAIL ELEMENTS.
2. W6x9 (W150x14) POSTS MAY BE USED IN PLACE OF W6 x 8.5(W150x13) POSTS.
3. W8x13 (W200x19) POSTS, 7'-6"(2286) LONG, ARE USED WITH TRANSITIONS TO VERTICAL OR SAFETY SHAPE PARAPETS (POSTS 1 AND 2) AND SYSTEM 6.
4. W6x8.5 (W150x13) POSTS, 6'-0"(1829) LONG, ARE USED WITH TRANSITIONS TO VERTICAL OR SAFETY SHAPE PARAPETS (POSTS 3 THOUGH 6), MD-B 350, SYSTEM 5 & 5A, AND STANDARD R-B 350 GUIDERAIL.

DELINEATOR NOTES:

1. DELINEATORS SHALL BE FORMED OF .080 POLY-CARBONATE OR .080 SHEET ALUMINUM IN ACCORDANCE WITH M.18.13.
2. REFLECTIVE SHEETING SHALL CONFORM TO M.18.09.2.
3. DELINEATORS SHALL BE INSTALLED ON THE POST CLOSEST TO THE DESIGNATED SPACING.
4. REFLECTIVE SHEETING SHALL BE WHITE EXCEPT ON THE LEFT SIDE OF DIVIDED STREETS, HIGHWAYS, RAMPS, AND ONE WAY ROADS IN THE DIRECTION OF TRAVEL WHERE IT SHALL BE YELLOW.
5. INSTALL DELINEATORS ON RAIL THAT IS PARALLEL TO AND NOT GREATER THAN 6'(1829) FROM THE EDGE OF THE ROADWAY. A MINIMUM OF THREE DELINEATORS MUST BE INSTALLED ON ANY RUN OF RAIL.

DELINEATOR SPACING:
RADIUS ≥ 300'(91440) - SPACE EVERY 50'(15.24m)
RADIUS < 300'(91440) - SPACE EVERY 25'(7.62m)

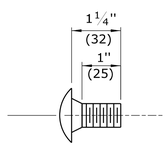

W-BEAM SPLICE BOLT DETAIL

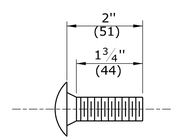

POST BOLT DETAIL FOR R-B 350 SYSTEM 6 RUBRAIL

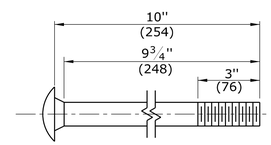

POST BOLT DETAIL FOR R-B 350 AND MD-B 350 GUIDERAIL

(UNTHREADED PORTION NOT TO EXCEED 6 3/4"(171))

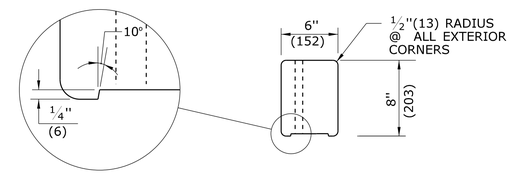

PLAN

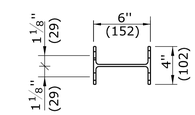

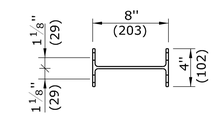

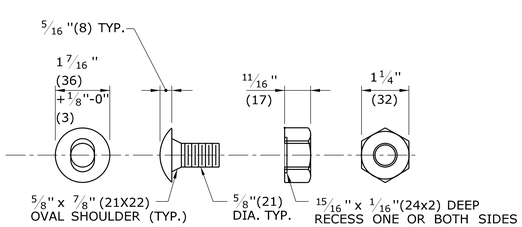

BUTTONHEAD BOLT **HEX NUT**

NOTE: AFTER GALVANIZING, THE NUT SHALL BE FREE RUNNING ON THE BOLT. DIAMETER SHOWN IS TYPICAL FOR ALL GUIDERAIL BOLTS. SEE DETAILS ABOVE FOR SPECIFIC LENGTHS.

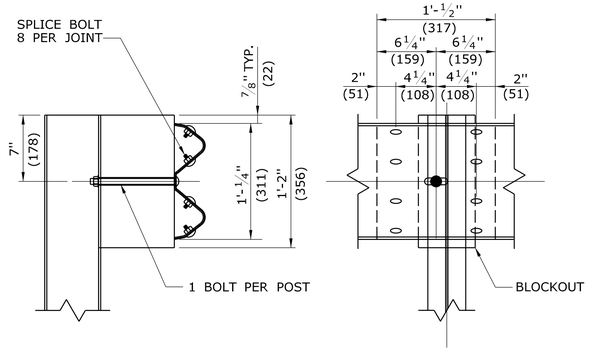

SECTION **ELEVATION**

LAP DETAIL

NOTE:
LAP RAIL SECTION IN DIRECTION OF TRAFFIC

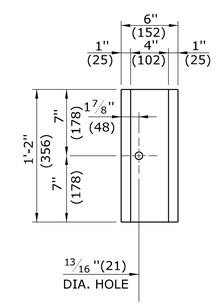

ELEVATION

R-B 350 PLASTIC BLOCKOUT DETAIL

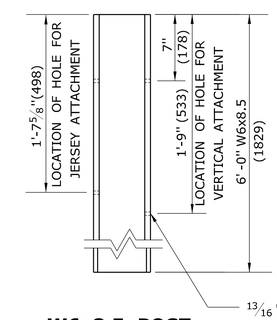

W6x8.5 POST (W150x13) 6'-0"(1829) LONG

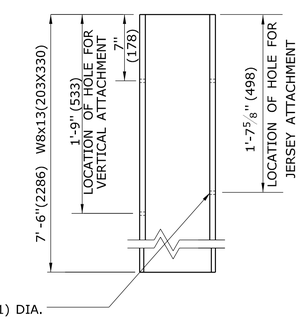

W8x13 POST (W200x19) 7'-6"(2286) LONG

BOLT HOLE LAYOUT FOR W8x13(W200x19) AND W6x8.5 (W150x13)UNIFORM POST

(REFER TO GENERAL NOTES)

ALL METRIC DIMENSIONS ARE IN MILLIMETERS (mm) UNLESS OTHERWISE NOTED.

REV.	DATE	REVISION DESCRIPTION
1	6/11	REMOVE WEATHERING STEEL NOTES

THE INFORMATION, INCLUDING ESTIMATED QUANTITIES OF WORK, SHOWN ON THESE SHEETS IS BASED ON LIMITED INVESTIGATIONS BY THE STATE AND IS IN NO WAY WARRANTED TO INDICATE THE CONDITIONS OF ACTUAL QUANTITIES OF WORK WHICH WILL BE REQUIRED.

Plotted Date: 5/10/2011

NOT TO SCALE

STATE OF CONNECTICUT
DEPARTMENT OF TRANSPORTATION

Filename: CTDOT_HIGHWAY_STD_JUNE2011.dgn Model: 36-HW-910_01

SUBMITTED BY: NAME/DATE/TIME:
Digitally signed by Leo Fontaine
DN: c=US, o=Connecticut, l=Newington, ou=Department of Transportation, email=Leo.Fontaine@ct.gov, o=State of Connecticut, cn=Leo Fontaine
Date: 2011.05.18 11:54:07 -04'00'

APPROVED BY: NAME/DATE/TIME:
James H. Norman
2011.06.09 15:12:16 -04'00'

CTDOT STANDARD SHEET

OFFICE OF ENGINEERING

STANDARD SHEET TITLE:
W-BEAM METAL BEAM RAIL HARDWARE

STANDARD SHEET NO.:
HW-910_01

GENERAL NOTES:

1. SEE SHEET HW-910_01 FOR HARDWARE AND DELINEATOR DETAILS.
2. MAXIMUM DESIGN DEFLECTION FOR R-B 350 GUIDERAIL AT THE STANDARD POST SPACING OF 6'-3"(1905) IS 4'-3"(1295). DEFLECTION REQUIREMENT IS MEASURED FROM THE BACK OF POST TO THE FACE OF OBJECT.
3. FOR CURVES WITH RADII OF 150'(45.7m) OR LESS, ALL RAIL ELEMENTS SHALL BE SHOP FABRICATED TO THE PROPER RADIUS AND GALVANIZED AFTER FABRICATION. RADIUS RAIL WHEN REQUIRED AND NOTED ON THE PLANS, IS INCLUDED IN THE PAY ITEM FOR GUIDERAIL.
4. RAIL HEIGHT WITH CURBING SHALL BE MEASURED FROM THE TOP OF PAVEMENT. ON HIGH SPEED ROADWAYS (≥45mph 72.4kph), 4"(102) CURBING MAY BE USED IN CONJUNCTION WITH GUIDERAIL AND THE RAIL ELEMENT SHALL BE PLACED FLUSH WITH THE FACE OF CURB. ON LOW SPEED ROADWAYS (<45mph 72.4kph), 6"(152) CURBING MAY BE USED IN CONJUNCTION WITH GUIDERAIL AND THE RAIL ELEMENT SHALL BE PLACED A MAXIMUM OF 9"(229) BEHIND THE FACE OF CURB.
5. THREE BLOCKOUTS MAY BE USED FOR ONE POST ONLY. TWO BLOCKOUTS MAY BE USED FOR A SERIES OF POSTS. THE COST OF ADDITIONAL BLOCKOUTS AND LONGER BOLTS SHALL BE INCLUDED IN THE BID PRICE PER FOOT OF GUIDERAIL. EXTRA BLOCKOUTS AT TRANSITION TO BRIDGE PARAPETS SHOULD BE AVOIDED.
6. W-BEAM GUIDERAIL MAY BE PLACED 1'(305) OR MORE FROM THE EDGE OF PAVEMENT ONLY ON SLOPES 10:1 OR FLATTER AND WITHOUT CURBING. IF THE RAIL IS INSTALLED WITHIN 2'(610) OF THE EDGE OF PAVEMENT, THE RAIL HEIGHT IS MEASURED FROM THE SHOULDER SLOPE EXTENDED TO THE RAIL. IF THE RAIL IS INSTALLED BEYOND 2'(610) FROM THE EDGE OF PAVEMENT, THE RAIL HEIGHT IS MEASURED FROM THE GROUND DIRECTLY BELOW THE RAIL.
7. ALL R-B 350 GUIDERAIL TYPES INSTALLED ON EXPRESSWAYS AND RAMPS SHALL USE CLASS B, TYPE-II (10 GAUGE) W-BEAM RAIL ELEMENTS.
8. 20" (507) DIA. EXCAVATED HOLE SHALL BE BACKFILLED WITH SUITABLE MATERIAL, OR GRANULAR FILL COMPACTED IN 6" (150) LIFTS BEFORE DRIVING POST OR POSTS MAY BE SET IN EXCAVATED HOLE AND BACKFILLED WITH CONTROLLED LOW STRENGTH MATERIAL (CLSM). 8" (203) DIA. HOLE SHALL BE BACKFILLED WITH SUITABLE MATERIAL.
9. AS DIRECTED BY THE ENGINEER AND WHERE PAVEMENT FOR RAILING IS NOT BEING INSTALLED, A MIN. 6" DEPTH OF PROCESSED AGGREGATE SHALL BE INSTALLED FROM THE PAVEMENT EDGE OR BACK OF CURB TO A MINIMUM OF 2'(610) BEHIND THE GUIDERAIL POST AND COMPACTED IN 6" (150) LIFTS.
10. MINIMUM RAIL HEIGHT FOR NEW CONSTRUCTION SHALL BE 29" (737) ± 1" (25).

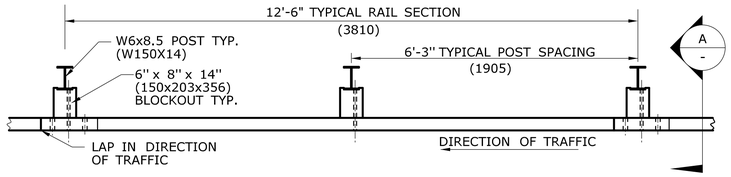

PLAN

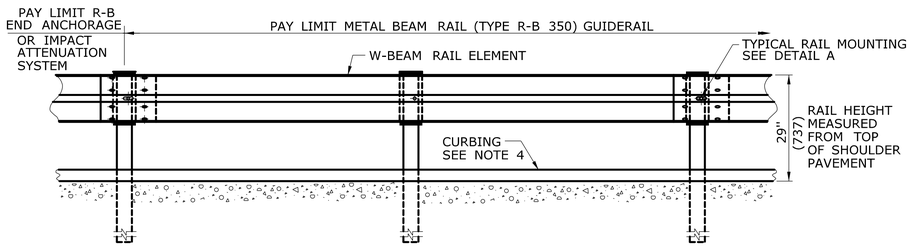

ELEVATION

METAL BEAM RAIL (TYPE R-B 350)

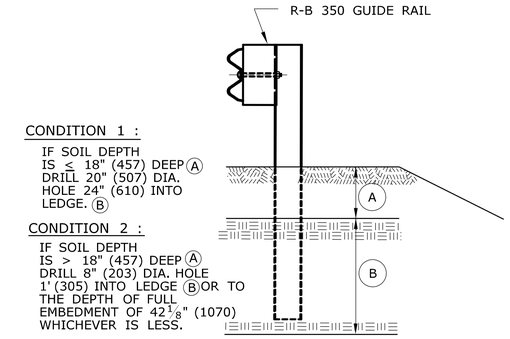

ELEVATION

(SEE NOTE 8)

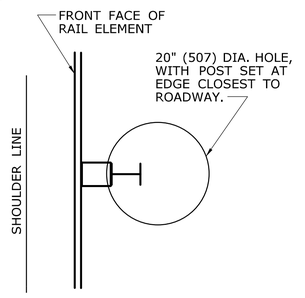

PLAN
CONDITION 1

(SEE NOTE 8)

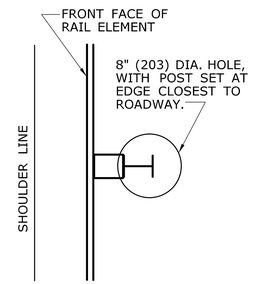

PLAN
CONDITION 2

(SEE NOTE 8)

DRILLING IN ROCK FOR GUIDERAIL POSTS

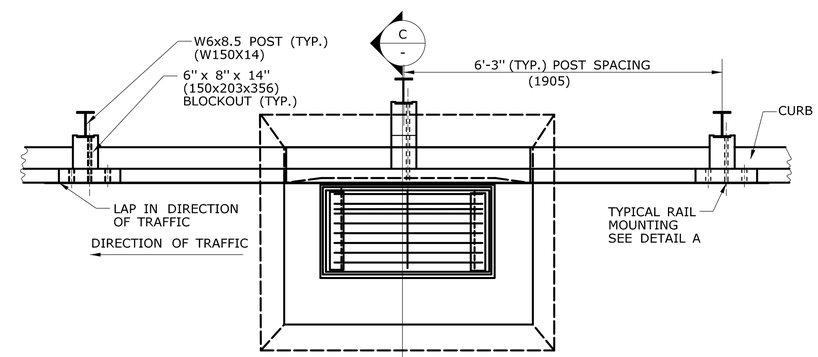

PLAN

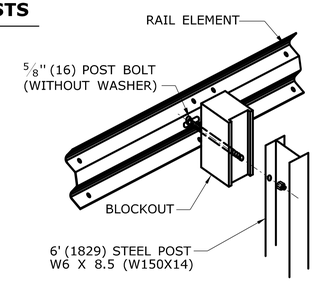

DETAIL A
RAIL MOUNTING

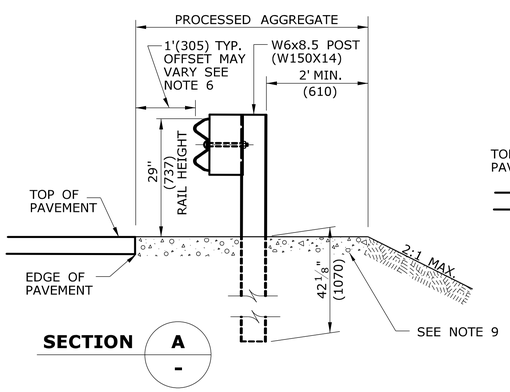

SECTION A -

NO CURB APPLICATION

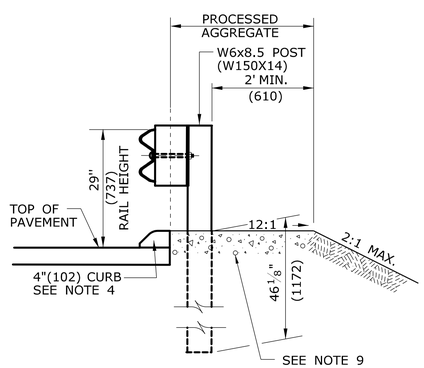

SECTION A -

CURB APPLICATION

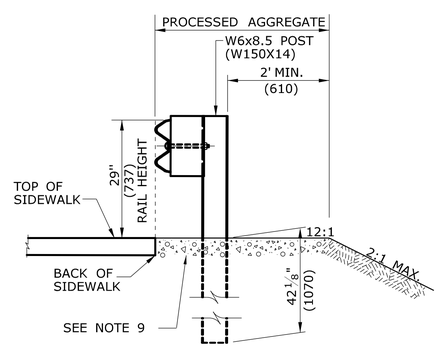

SECTION A -

SIDEWALK APPLICATION

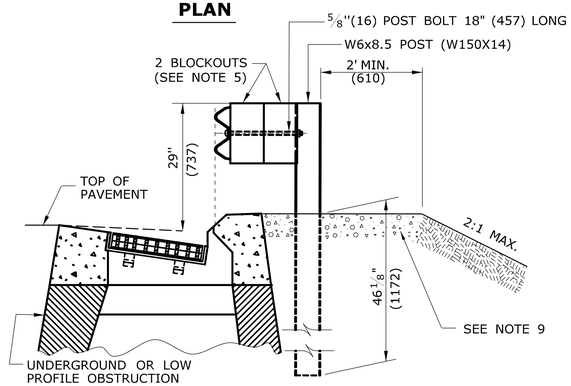

SECTION C -

MULTIPLE BLOCKOUT APPLICATION (MAY BE USED TO AVOID UNDERGROUND OR LOW PROFILE OBSTRUCTION)

ALL METRIC DIMENSIONS ARE IN MILLIMETERS (mm) UNLESS OTHERWISE NOTED.

REV.	DATE	REVISION DESCRIPTION
1	6/11	REVISED NOTE 9 FOR USE OF PROCESSED AGGREGATE - AND REMOVED NOTE 6 FOR WEATHERING STEEL -
-	-	-
-	-	-
-	-	-
-	-	-

THE INFORMATION, INCLUDING ESTIMATED QUANTITIES OF WORK, SHOWN ON THESE SHEETS IS BASED ON LIMITED INVESTIGATIONS BY THE STATE AND IS IN NO WAY WARRANTED TO INDICATE THE CONDITIONS OF ACTUAL QUANTITIES OF WORK WHICH WILL BE REQUIRED.

Plotted Date: 5/10/2011

NOT TO SCALE

STATE OF CONNECTICUT
DEPARTMENT OF TRANSPORTATION

Filename: CTDOT_HIGHWAY_STD_JUNE2011.dgn Model: 37- HW-910_02

SUBMITTED BY: NAME/DATE/TIME: Digitally signed by Leo Fontaine DN: c=US, st=Connecticut, l=Newington, ou=Department of Transportation, email=Leo.Fontaine@ct.gov, o=State of Connecticut, cn=Leo Fontaine Date: 2011.05.18 11:54:43 -04'00'

APPROVED BY: NAME/DATE/TIME: James H. Norman 2011.06.09 15:12:46 -04'00'

CTDOT STANDARD SHEET

OFFICE OF ENGINEERING

STANDARD SHEET TITLE:

METAL BEAM RAIL (TYPE R-B 350) GUIDERAIL

STANDARD SHEET NO.: **HW-910_02**

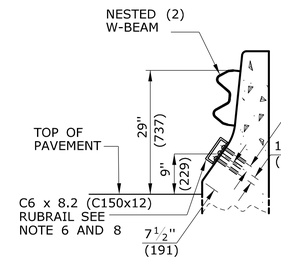

SECTION A - JERSEY SHAPE

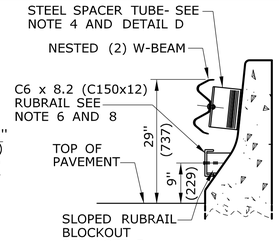

SECTION B - JERSEY SHAPE

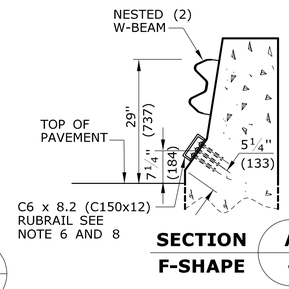

SECTION A - F-SHAPE

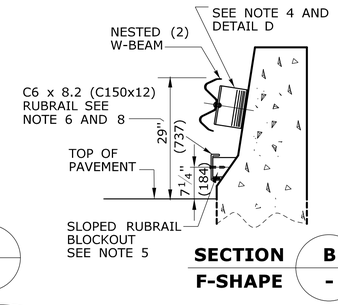

SECTION B - F-SHAPE

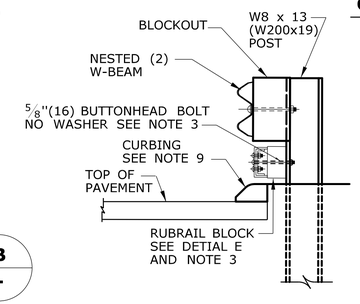

SECTION C

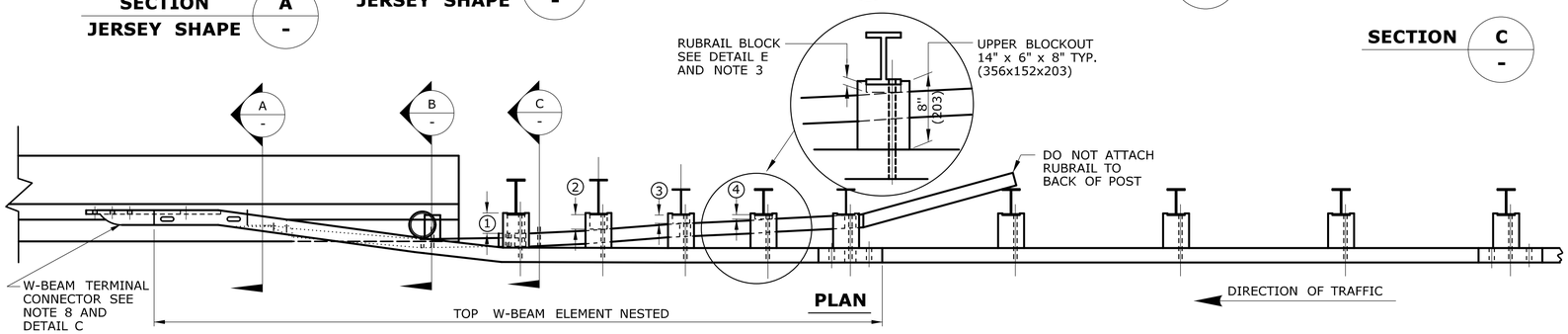

PLAN

GENERAL NOTES:

1. THIS R-B 350 GUIDERAIL TRANSITION IS APPROPRIATE FOR CONNECTION AT THE FOLLOWING LOCATIONS:
   (A) JERSEY SHAPE OR F-SHAPE PARAPET OR BARRIER WITH NO ELECTRICAL JUNCTION BOX WITHIN THE LIMITS OF THE ATTACHMENT (APPROXIMATELY 8'(2.44m)).
   (B) BRIDGE PARAPETS RETROFITTED FROM SAFETY WALK TO MODIFIED SAFETY SHAPE WITH NO ELECTRICAL JUNCTION BOX WITHIN THE LIMITS OF THE ATTACHMENT (APPROXIMATELY 8'(2.44m)).
   (C) LEADING AND TRAILING ENDS ON DUAL DIRECTION ROADWAYS.
2. POSTS 1 THROUGH 5 REQUIRE AN ADDITIONAL HOLE TO ATTACH LOWER BLOCKOUTS AND/OR RUBRAIL.
3. RUBRAIL BLOCKOUTS LOCATED ON POSTS 1 THROUGH 4 ARE OFFSET DRILLED AND SECURED WITH 5/8"(16) BUTTONHEAD BOLTS (SEE CHART FOR BOLT LENGTHS). SECURE BLOCKS TO POSTS 2 AND 4. SECURE RUBRAIL AND BLOCKOUTS TO POSTS 1 AND 3. RUBRAIL IS SECURED TO POST 5 WITH A 5/8" x 4 1/2" (16x114) BUTTONHEAD BOLT. RUBRAIL IS FLARED TO BACK OF POST 6 AND NOT SECURED.
4. STEEL SPACER TUBE IS A SCHEDULE 40 GALVANIZED PIPE 6"(152) INSIDE DIAMETER x 9"(229) LONG. ATTACH TUBE TO RAIL ONLY WITH 5/8" x 1 1/4"(16x32) LONG BUTTONHEAD BOLT AND RECTANGULAR PLATE WASHER. TUBE IS NOT ATTACHED TO PARAPET.
5. SEE DETAIL F FOR SLOPED RUBRAIL BLOCKOUT. BLOCKOUT IS ATTACHED TO RAIL ELEMENT ONLY. USE 3/8" x 3"(10x76) LAG BOLT WITH FLAT WASHER.
6. SHOP FABRICATE THE C6 x 8.2 (C150x12) RUBRAIL END TO BE CONSISTENT WITH THE SLOPE OF THE JERSEY SHAPE OR F-SHAPE AND ATTACH FLUSH WITH THE SLOPED TOE OF THE PARAPET OR BARRIER.
7. USE CLASS B TYPE II W-BEAM RAIL ELEMENTS (10 GAUGE) FOR INSTALLATIONS ON EXPRESSWAYS AND RAMPS.
8. ANCHORAGE:
   (A) AT EXISTING PARAPETS OR BARRIERS, RUBRAIL SHALL BE ANCHORED USING THREE 5/8" x 6"(16x152) CHEMICALLY ANCHORED BOLTS WITH WASHERS OR AS DETAILED ON STRUCTURE SHEETS. MAXIMUM BOLT PROJECTION BEYOND THE NUT SHALL BE 1/2"(13).
   (B) AT EXISTING PARAPETS OR BARRIERS, THE W-BEAM TERMINAL CONNECTOR SHALL BE ANCHORED USING FIVE 7/8" x 12"(22x305) CHEMICALLY ANCHORED BOLTS WITH WASHERS, OR AS DETAILED ON THE STRUCTURE SHEETS. MAXIMUM BOLT PROJECTION BEYOND THE NUT SHALL BE 1/2"(13). THE 12"(305) MINIMUM LENGTH OF CHEMICALLY ANCHORED BOLTS SHALL INCLUDE A MINIMUM EMBEDMENT DEPTH OF 10"(254) INTO SUITABLY REINFORCED CONCRETE, OR AS RECOMMENDED BY MANUFACTURER OF BONDING MATERIAL.
   (C) NEW PARAPETS OR BARRIERS, THE W-BEAM TERMINAL CONNECTOR AND RUBRAIL SHALL BE ANCHORED AS DETAILED ON THE STRUCTURE PLANS.
9. FOR NEW CONSTRUCTION WHERE CURBING IS NEEDED, USE EITHER 4"(102) BITUMINOUS CONCRETE PARK CURBING OR PRECAST CONCRETE TRANSITION CURBING SET WITH A 4"(102) REVEAL. IF EXISTING CURBING IS GRANITE STONE TRANSITION CURBING, RESET CURB TO A 4"(102) REVEAL OR REMOVE IT AND REPLACE IT WITH 4"(102) CURBING.
10. POSTS 1 AND 2 ARE W8 x 13 (W200x19), 7'-6"(2286) LONG. ALL OTHER POSTS IN TRANSITION ARE W6 x 8.5 (W150x14), 6'(1829) LONG.
11. ADDITIONAL BLOCKOUTS WITH POSTS 1 THROUGH 6 SHOULD BE AVOIDED.
12. FOR SINGLE DIRECTION ROADWAY:
    INSTALL W-BEAM TERMINAL CONNECTOR BETWEEN NESTED GUIDERAIL ELEMENTS.
    FOR DUAL DIRECTION ROADWAY FOR APPROACHING TRAFFIC:
    INSTALL W-BEAM TERMINAL CONNECTOR BETWEEN NESTED GUIDERAIL ELEMENTS.
    FOR TRAILING END:
    INSTALL W-BEAM TERMINAL CONNECTOR OUTSIDE OF THE NESTED GUIDERAIL ELEMENTS.
13. MINIMUM RAIL HEIGHT FOR NEW CONSTRUCTION SHALL BE 29" (737) + 1" (25).

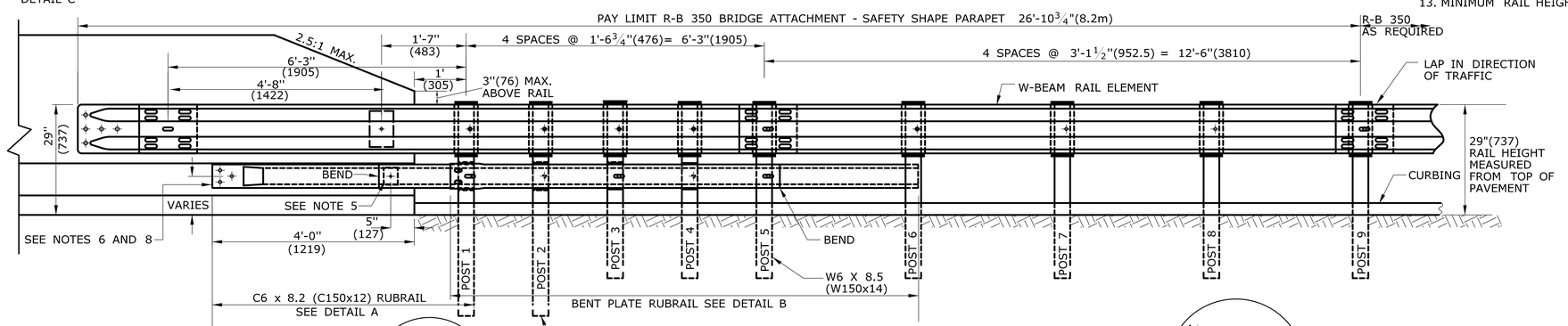

ELEVATION

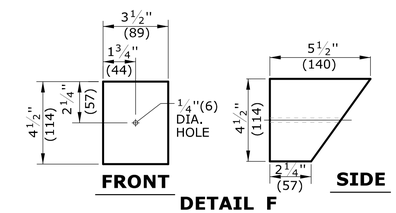

DETAIL F SLOPED RUBRAIL BLOCKOUT

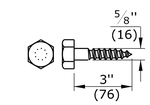

DETAIL G LAG BOLT

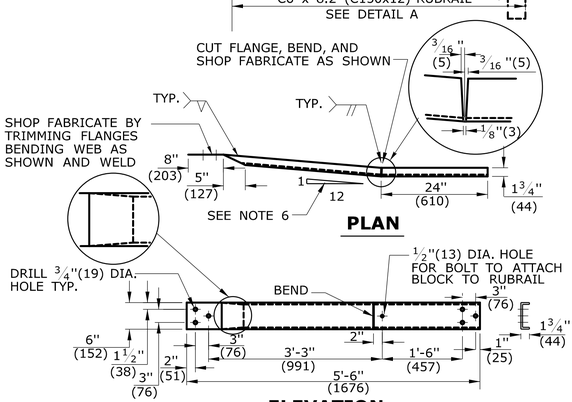

PLAN

ELEVATION

DETAIL A - C6 x 8.2 (C150x12) RUBRAIL

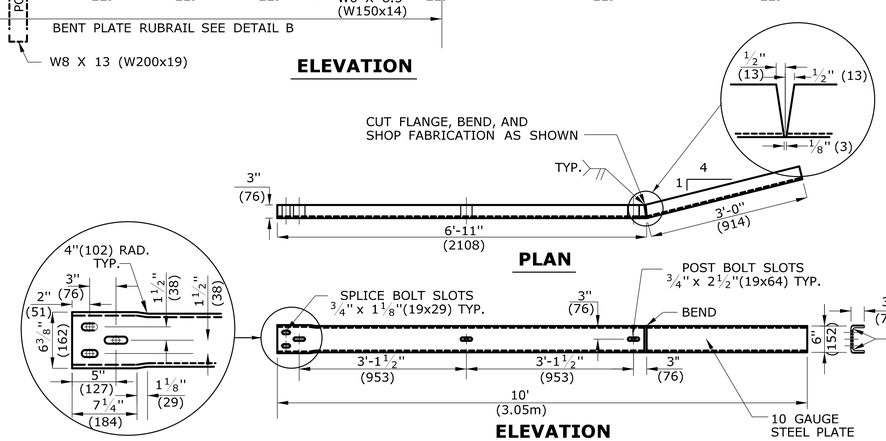

PLAN

ELEVATION

DETAIL B BENT PLATE RUBRAIL

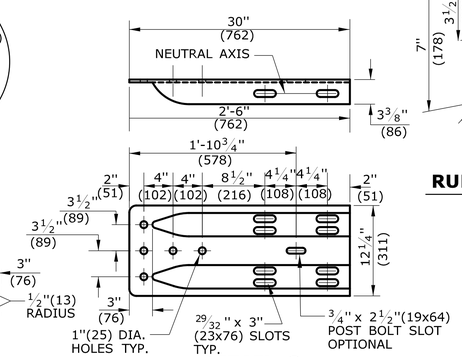

DETAIL C

W-BEAM TERMINAL CONNECTOR

CLASS B TYPE II

SEE NOTE 12

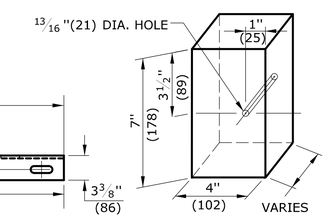

DETAIL E

RUBRAIL BLOCKOUT

RUBRAIL BLOCKS 7"(178) HIGH x 4"(102) WIDE		
POST	THICKNESS	BOLT LENGTH
1	4 1/4"(108)	9"(229)
2	3 1/4"(83)	5"(127)*
3	2"(51)	6"(152)
4	1"(25)	3"(76)*

* BOLTS FOR POSTS 2 AND 4 ARE USED TO ATTACH BLOCK TO POST. RUBRAIL NOT ATTACHED TO BLOCK.

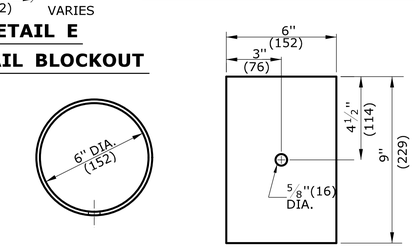

DETAIL D

STEEL SPACER TUBE

SEE NOTE 4

ALL METRIC DIMENSIONS ARE IN MILLIMETERS (mm) UNLESS OTHERWISE NOTED.

REV.	DATE	REVISION DESCRIPTION
1	6/11	REVISED NOTE 8 FOR USE OF CHEMICAL ANCHORS AND PAY ITEM CHANGED TO SAFETY SHAPE. -
-	-	- -
-	-	- -
-	-	- -
-	-	- -

THE INFORMATION, INCLUDING ESTIMATED QUANTITIES OF WORK, SHOWN ON THESE SHEETS IS BASED ON LIMITED INVESTIGATIONS BY THE STATE AND IS IN NO WAY WARRANTED TO INDICATE THE CONDITIONS OF ACTUAL QUANTITIES OF WORK WHICH WILL BE REQUIRED.

Plotted Date: 5/10/2011

NOT TO SCALE

STATE OF CONNECTICUT
DEPARTMENT OF TRANSPORTATION

Filename: CTDOT_HIGHWAY_STD_JUNE2011.dgn Model: 41 - HW-910_06

SUBMITTED BY: NAME/DATE/TIME:
Digitally signed by Leo Fontaine
DN: c=US, o=Connecticut, l=Newington, ou=Department of Transportation, email=Leo.Fontaine@ct.gov, o=State of Connecticut, cn=Leo Fontaine
Date: 2011.05.18 11:55:15 -04'00'

APPROVED BY: NAME/DATE/TIME:
James H. Norman
2011.06.09 15:14:22 -04'00'

CTDOT STANDARD SHEET

OFFICE OF ENGINEERING

STANDARD SHEET TITLE:

R-B 350 BRIDGE ATTACHMENT TO SAFETY SHAPE PARAPET

STANDARD SHEET NO.: HW-910_06

GENERAL NOTES:

1. SEE SHEET HW-910_01 FOR HARDWARE AND DELINEATOR DETAILS.
2. IF PROPOSED R-B 350 GUIDERAIL IS BEING ATTACHED TO A PARAPET USING EXISTING ANCHOR BOLTS FROM R-I GUIDERAIL INSTALLED AT A 33" (838) RAIL HEIGHT, A 4" (102) HEIGHT TRANSITION OVER 25' (7.62m) SHALL BE PROVIDED.
3. FOR EXISTING PARAPETS, USE THREE 1" (25) DIA. x 14" (356) LONG, FULLY THREADED, CHEMICALLY ANCHORED BOLTS AND WASHERS WITH 12" (305) EMBEDMENT DEPTH OR AS RECOMMENDED BY MANUFACTURER OF BONDING MATERIAL TO OBTAIN FULL STRENGTH OF ANCHOR BOLTS. FOR ANCHORAGE IN NEW PARAPETS, SEE STRUCTURE SHEETS.
4. USE CLASS B TYPE II (10 GAUGE) W-BEAM RAIL ELEMENT FOR INSTALLATIONS ON EXPRESSWAYS AND RAMPS.
5. TRAILING END ATTACHMENT MAY ALSO BE INSTALLED AT A VERTICAL FACE PARAPET OR RETAINING WALL ON ONE-WAY ROADWAYS ONLY.
6. MINIMUM RAIL HEIGHT FOR NEW CONSTRUCTION SHALL BE 29" (737) ± 1" (25).

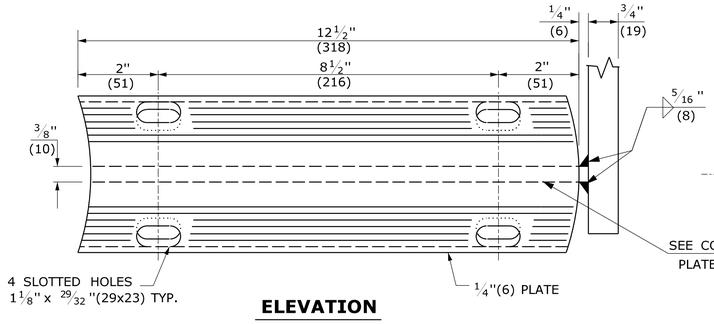

ELEVATION

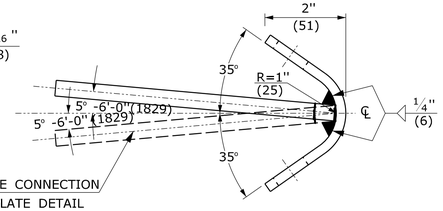

SIDE

BENT PLATE

(2 REQUIRED)

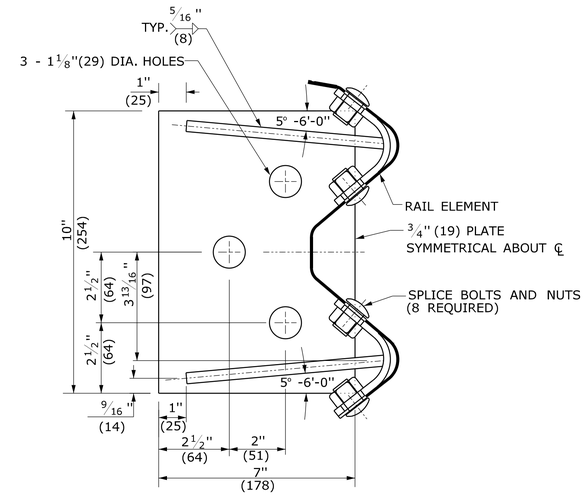

BASE PLATE AND ASSEMBLY

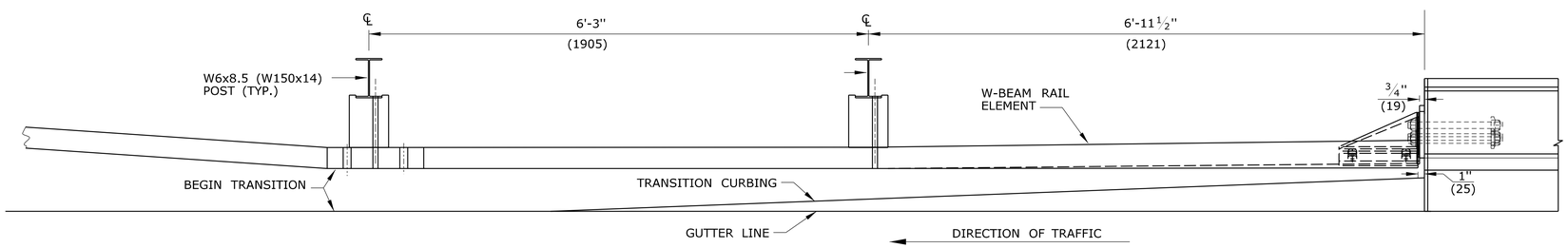

PLAN

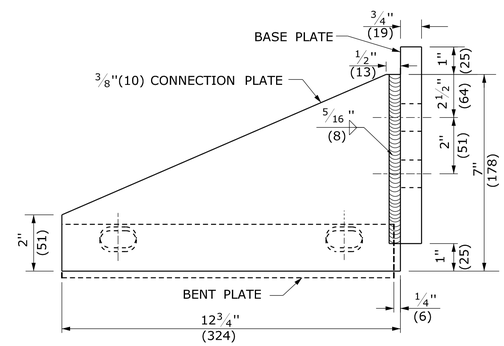

PLAN

CONNECTION PLATE DETAIL

(2 REQUIRED)

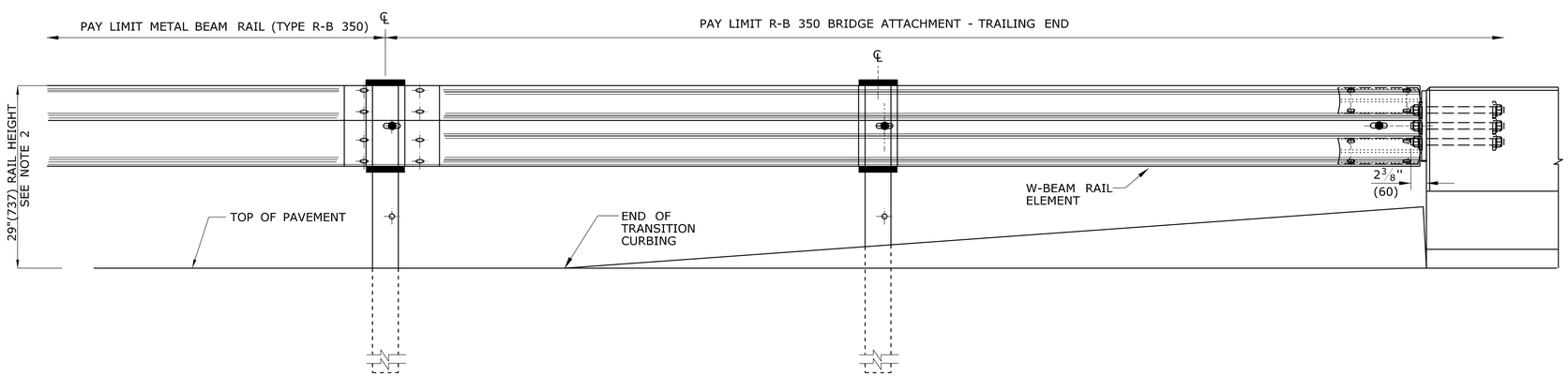

ELEVATION

ATTACHMENT AT TRAILING END OF BRIDGE PARAPET

(ONE-WAY ROADWAY ONLY)

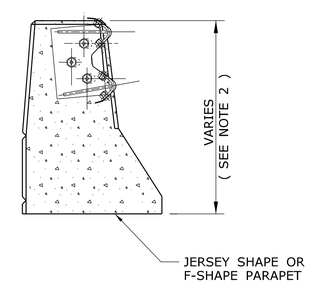

BASE PLATE AND ASSEMBLY ATTACHMENT

TO TRAILING END OF CONCRETE BARRIER

OR BRIDGE PARAPET (SEE NOTE 5)

ALL METRIC DIMENSIONS ARE IN MILLIMETERS (mm) UNLESS OTHERWISE NOTED.

REV.	DATE	REVISION DESCRIPTION	
1	6/11	REVISED NOTE 3 FOR USE OF CHEMICAL ANCHORS	-
-	-	-	-
-	-	-	-
-	-	-	-
-	-	-	-
-	-	-	-

THE INFORMATION, INCLUDING ESTIMATED QUANTITIES OF WORK, SHOWN ON THESE SHEETS IS BASED ON LIMITED INVESTIGATIONS BY THE STATE AND IS IN NO WAY WARRANTED TO INDICATE THE CONDITIONS OF ACTUAL QUANTITIES OF WORK WHICH WILL BE REQUIRED.

Plotted Date: 5/10/2011

NOT TO SCALE

STATE OF CONNECTICUT
DEPARTMENT OF TRANSPORTATION

Filename: CTDOT_HIGHWAY_STD_JUNE2011.dgn Model: 43 - HW-910_08

SUBMITTED BY: NAME/DATE/TIME:
Digitally signed by Leo Fontaine
DN: c=US, st=Connecticut, l=Newington, ou=Department of Transportation, email=Leo.Fontaine@ct.gov, o=State of Connecticut, cn=Leo Fontaine
Date: 2011.05.18 11:56:30 -04'00'

APPROVED BY: NAME/DATE/TIME:
James H. Norman
2011.06.09 15:15:09 -04'00'

CTDOT STANDARD SHEET

OFFICE OF ENGINEERING

STANDARD SHEET TITLE:

R-B 350 BRIDGE ATTACHMENT TRAILING END

STANDARD SHEET NO.:

HW-910_08

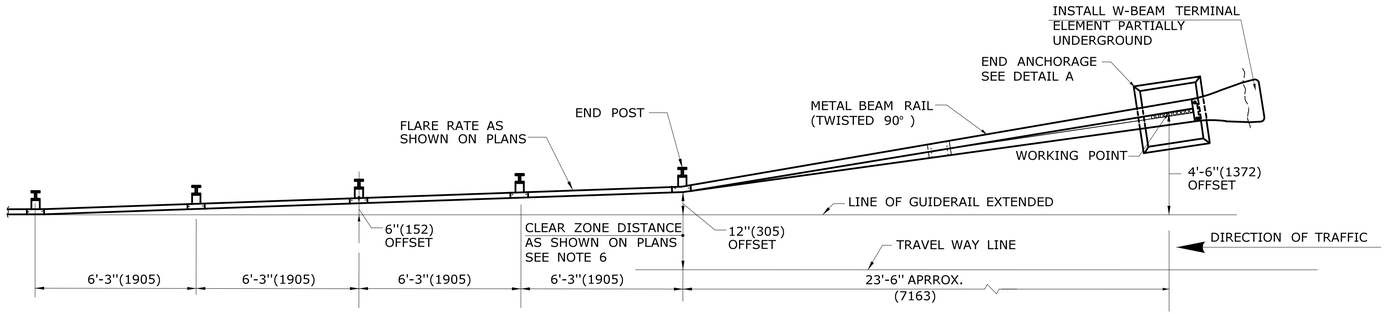

PLAN

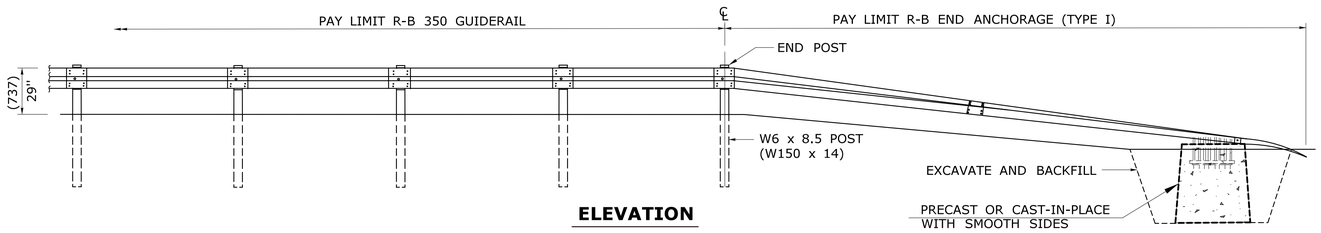

ELEVATION

R-B END ANCHORAGE TYPE I (ROADSIDE APPLICATION)

GENERAL NOTES:

1. R-B END ANCHORAGE TYPE I INSTALLED ON FREEWAYS AND RAMPS SHALL USE CLASS B (10 GAUGE) TERMINAL AND W-BEAM RAIL ELEMENTS. ALL OTHER R-B END ANCHORAGE TYPE I SHALL USE CLASS A (12 GAUGE) TERMINAL AND W-BEAM RAIL ELEMENTS.
2. R-B END ANGHORAGE TYPE II SHALL USE CLASS A (12 GAUGE) TERMINAL AND W-BEAM RAIL ELEMENTS.
3. OTHER RADII WHICH CAN BE DEMONSTRATED TO PROVIDE THE INSTALLATIONS SHOWN FOR END ANCHORAGE TYPE II MAY BE APPROVED.
4. J-HOOK BOLTS MAY BE SUBSTITUTED FOR BOTTOM PLATE ANCHORAGE IN CONCRETE END ANCHORS USING THE SAME SIZE, STRENGTH, AND LENGTH AS NOTED ON THE PLANS.
5. MINIMUM RAIL HEIGHT FOR NEW CONSTRUCTION SHALL BE 29" (737) + 1' (25).
6. R-B TYPE I END ANCHOR: INSTALL LEADING END USING DESIGN CLEAR ZONE DISTANCE MEASURED FROM TRAVEL WAY LINE TO END POST AS SHOWN ON PLANS, THEN PLACE CONCRETE ANCHOR 4'-6"(1372) FROM THE LINE OF GUIDERAIL EXTENSION. INSTALL TRAILING END ON DUAL DIRECTION ROADWAYS IN THE SAME MANNER EXCEPT MEASURE CLEAR ZONE FROM THE DOUBLE YELLOW LINE. INSTALL TRAILING END ON SINGLE DIRECTION ROADWAYS MEASURED FROM THE GUIDERAIL LINE EXTENDED AND OFFFSET 4'-6" (1372).

   R-B TYPE II END ANCHOR: INSTALL ONLY ON ROADWAYS WITH DESIGN SPEEDS < 45mph (72kph). FOR DUAL DIRECTION ROADWAYS, INSTALL IN THE SAME MANNER AS TYPE I END ANCHOR FOR BOTH LEADING AND TRAILING END USING DESIGN CLEAR ZONE DISTANCE EXCEPT PLACE CONCRETE ANCHOR 2'-4" (711) MEASURED FROM THE LINE OF GUIDERAIL EXTENDED. INSTALL TRAILING END ON SINGLE DIRECTION ROADWAYS MEASURED FROM THE GUIDERAIL LINE EXTENDED AND OFFSET 2'-4" (711).
7. SEE HW-911_04 FOR TYPICAL END ANCHOR GRADING PLAN.

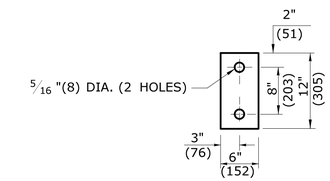

DETAIL B

TYPE 2 OBJECT MARKER

SIGN # 51-5030

OBJECT MARKER FACE SHALL BE YELLOW TYPE III RETROREFLECTORIZED. THE BOTTOM OF TYPE 2 OBJECT MARKER SHALL BE 4'(1219) ABOVE GROUND LEVEL MOUNTED ON METAL DELINEATOR POST. IT SHALL BE USED TO IDENTIFY CULVERT ENDS AND TYPE II END ANCHORS, OR AS DIRECTED BY THE ENGINEER.

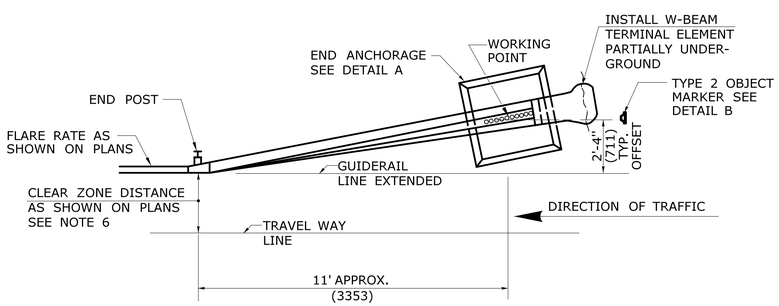

PLAN

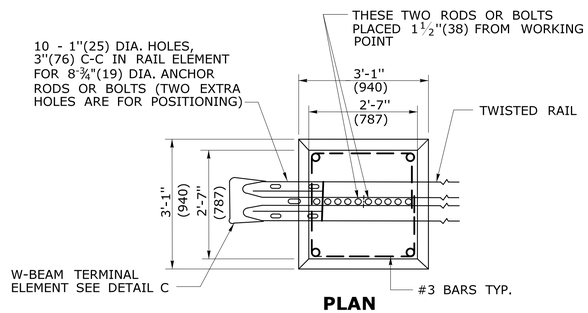

PLAN

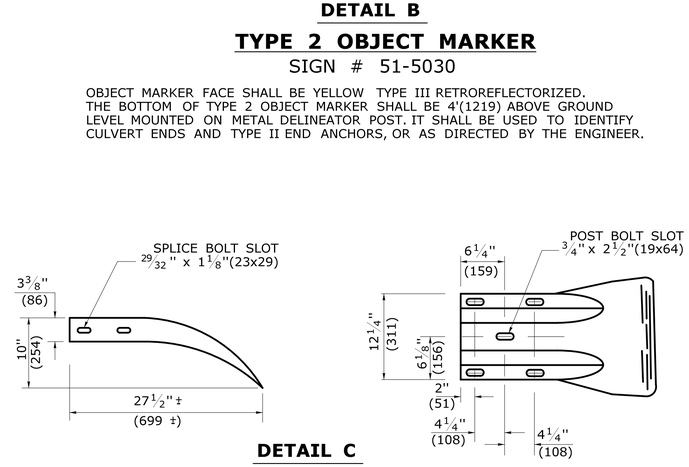

DETAIL C

W-BEAM TERMINAL ELEMENT

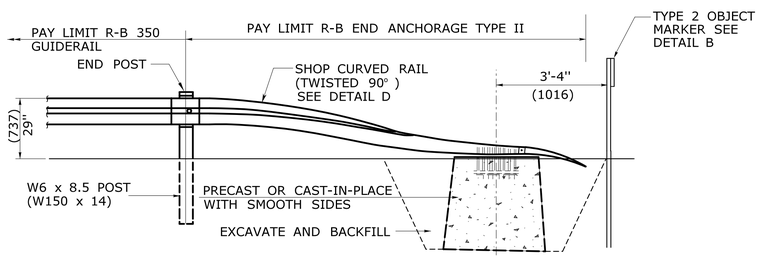

ELEVATION

R-B END ANCHORAGE TYPE II

SEE NOTE 2

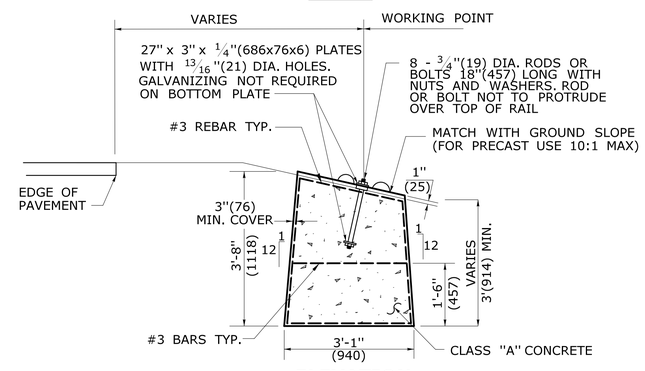

ELEVATION

DETAIL A

ROADSIDE CONCRETE END ANCHOR

SEE NOTE 4

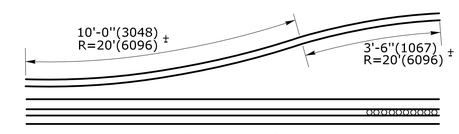

DETAIL D

SHOP CURVED RAIL

SEE NOTE 3

ALL METRIC DIMENSIONS ARE IN MILLIMETERS (mm) UNLESS OTHERWISE NOTED.

REV.	DATE	REVISION DESCRIPTION
1	6/11	REVISED TYPE I AND II ANCHOR FOR CLEAR ZONE PLACEMENT
2	7/13	ADD POST OFFSET DISTANCE -
-	-	- -
-	-	- -
-	-	- -
-	-	- -

THE INFORMATION, INCLUDING ESTIMATED QUANTITIES OF WORK, SHOWN ON THESE SHEETS IS BASED ON LIMITED INVESTIGATIONS BY THE STATE AND IS IN NO WAY WARRANTED TO INDICATE THE CONDITIONS OF ACTUAL QUANTITIES OF WORK WHICH WILL BE REQUIRED.

Plotted Date: 6/13/2013

NOT TO SCALE

STATE OF CONNECTICUT
DEPARTMENT OF TRANSPORTATION

Filename: CTDOT_HIGHWAY_STD2013.dgn Model: 70 - HW-911_01

SUBMITTED BY: NAME/DATE/TIME: Digitally signed by Leo L. Fontaine Date: 2013.07.24 10:56:59-04'00'

APPROVED BY: NAME/DATE/TIME: James H. Norman 2013.07.24 14:55:36-04'00'

CTDOT STANDARD SHEET

OFFICE OF ENGINEERING

STANDARD SHEET TITLE: R-B END ANCHORAGE TYPE I AND II

STANDARD SHEET NO.: HW-911_01

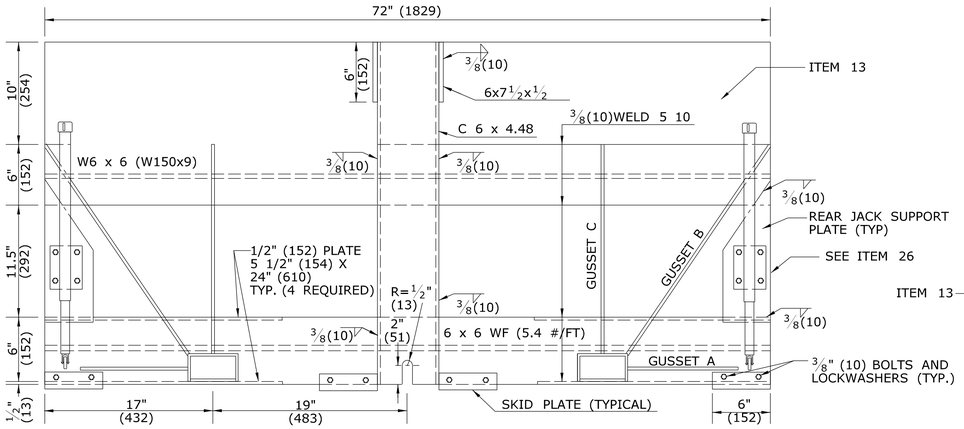

FRONT VIEW

SECTION A

ALL COMPONENTS TO BE 6061-T6 ALLUMINUM
USE COMPATIBLE ALLOY IN WELDING MATERIAL

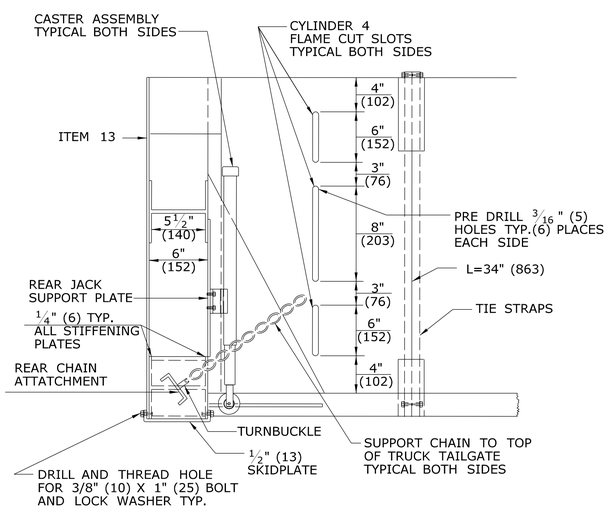

REAR ASSEMBLY SIDE VIEW

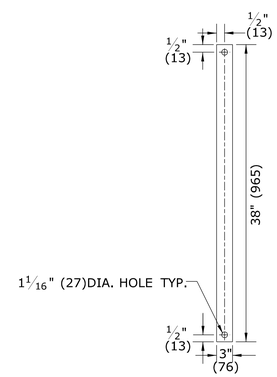

TIE STRAPS

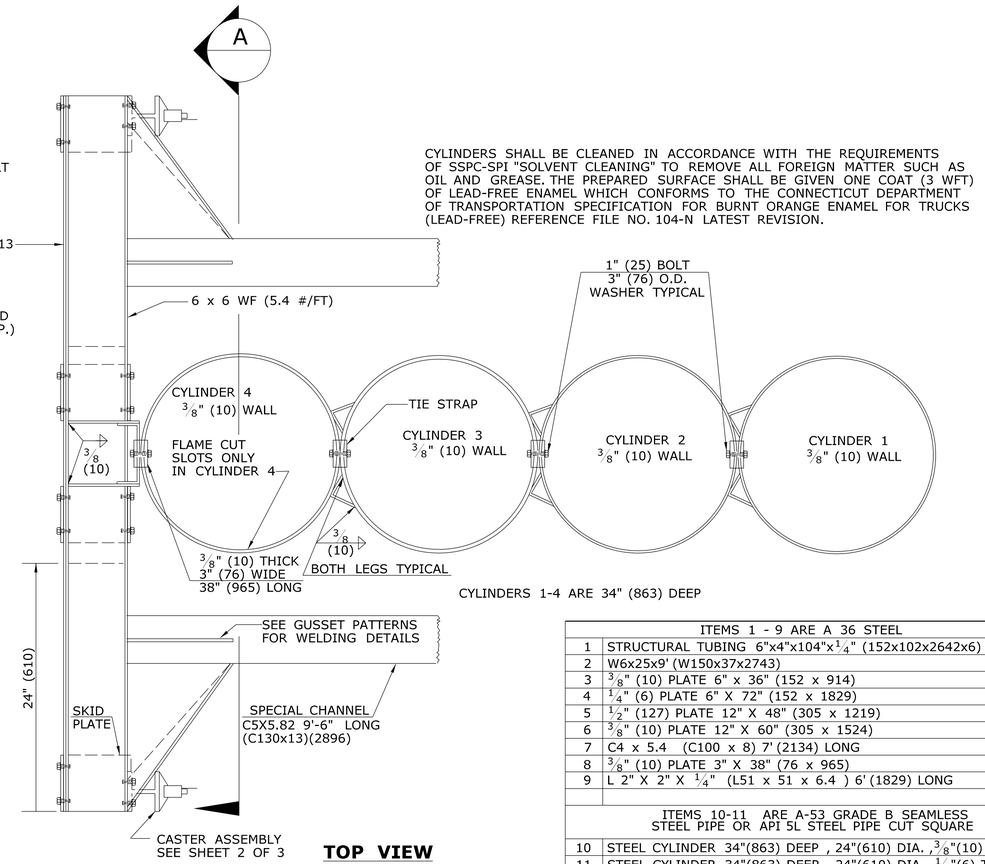

CYLINDERS SHALL BE CLEANED IN ACCORDANCE WITH THE REQUIREMENTS OF SSPC-SPI "SOLVENT CLEANING" TO REMOVE ALL FOREIGN MATTER SUCH AS OIL AND GREASE. THE PREPARED SURFACE SHALL BE GIVEN ONE COAT (3 WFT) OF LEAD-FREE ENAMEL WHICH CONFORMS TO THE CONNECTICUT DEPARTMENT OF TRANSPORTATION SPECIFICATION FOR BURNT ORANGE ENAMEL FOR TRUCKS (LEAD-FREE) REFERENCE FILE NO. 104-N LATEST REVISION.

CYLINDERS 1-4 ARE 34" (863) DEEP

TOP VIEW

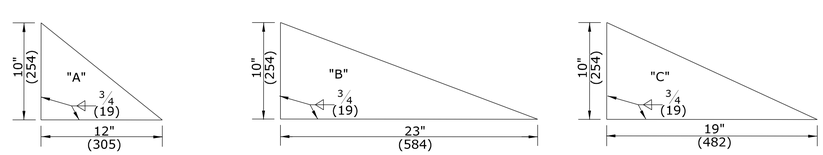

1"(25) PLATE **1/2"(13) PLATE** **1/2"(13) PLATE**

GUSSET PATTERNS

ITEMS 1 - 9 ARE A 36 STEEL		
1	STRUCTURAL TUBING 6"x4"x104"x1/4" (152x102x2642x6)	2
2	W6x25x9' (W150x37x2743)	1
3	3/8" (10) PLATE 6" x 36" (152 x 914)	1
4	1/4" (6) PLATE 6" X 72" (152 x 1829)	4
5	1/2" (127) PLATE 12" X 48" (305 x 1219)	1
6	3/8" (10) PLATE 12" X 60" (305 x 1524)	2
7	C4 x 5.4 (C100 x 8) 7' (2134) LONG	2
8	3/8" (10) PLATE 3" X 38" (76 x 965)	10
9	L 2" X 2" X 1/4" (L51 x 51 x 6.4) 6' (1829) LONG	1
ITEMS 10-11 ARE A-53 GRADE B SEAMLESS STEEL PIPE OR API 5L STEEL PIPE CUT SQUARE		
10	STEEL CYLINDER 34"(863) DEEP , 24"(610) DIA. ,3/8"(10) THICK	1
11	STEEL CYLINDER 34"(863) DEEP , 24"(610) DIA. ,1/4"(6) THICK	3
12	25' (7620) OF 1/4" (6) CHAIN	1
ITEMS 13-19 ARE 6061 T6 OR 6061-64 ALUMINUM		
13	1/4" (6) PLATE 34" (863) x 72" (1829)	1
14	6 x 6 (152x152) WF (5.4 #/FT) - 6' (1829) LONG	2
15	SPECIAL CHANNEL-DEPTH = 5" (127), WT/FT = 5.82 WIDTH = 2.875 (73), LENGTH = 9'-6" (2896)	2
16	C 6 x 4.48 (C 152 x 7) 34" (863) LONG	1
17	1/2" (13) PLATE 48" x 48" (1219 x 1219)	1
18	1/4" (6) PLATE 4" x 108" (102 x 2743)	2
19	1" (25) PLATE 10" X 12" (254 x 305)	1
20	1 X 3 A 325 STRUCTURAL BOLT WITH NUTS	12
21	HI STR. STRUCTURAL WASHERS	12
22	1 X 4 (25x102) A 325 STRUCTURAL BOLTS WITH NUTS	2
23	3/4" x 4 (20x102) A 325 STRUCTURAL BOLTS WITH NUTS	4
24	HI STR. STRUCTURAL WASHERS	4
25	LOCK WASHERS	16
26	CASTER ASSEMBLY	4

IMPACT PLATE & CYLINDER DETAILS

ALL METRIC DIMENSIONS ARE IN MILLIMETERS (mm) UNLESS OTHERWISE NOTED.

REV.	DATE	REVISION DESCRIPTION
-	-	-
-	-	-
-	-	-
-	-	-
-	-	-
-	-	-

THE INFORMATION, INCLUDING ESTIMATED QUANTITIES OF WORK, SHOWN ON THESE SHEETS IS BASED ON LIMITED INVESTIGATIONS BY THE STATE AND IS IN NO WAY WARRANTED TO INDICATE THE CONDITIONS OF ACTUAL QUANTITIES OF WORK WHICH WILL BE REQUIRED.

Plotted Date: 9/30/2010

NOT TO SCALE

STATE OF CONNECTICUT
DEPARTMENT OF TRANSPORTATION

Filename: CTDOT_HIGHWAY_STD.dgn Model: 75 - HW-1806_01a

SUBMITTED BY: NAME/DATE/TIME:
Digitally signed by Leo Fontaine
DN: c=US, st=Connecticut, l=Newington, ou=Department of Transportation, email=Leo.Fontaine@ct.gov, o=State of Connecticut, cn=Leo Fontaine
Date: 2010.10.16 15:08:03 -04'00'

APPROVED BY: NAME/DATE/TIME:
James H. Norman
Digitally signed by James H. Norman
DN: c=US, st=CT, l=Newington, ou=Department of Transportation, email=james.norman@ct.gov, o=State of Connecticut, cn=James H. Norman
Date: 2010.10.18 09:01:34 -04'00'

CTDOT STANDARD SHEET

OFFICE OF ENGINEERING

STANDARD SHEET TITLE:
CT TRUCK MOUNTED IMPACT ATTENUATOR SHEET 1

STANDARD SHEET NO.:
HW-1806_01a

GENERAL NOTES :

FRONT AND REAR CASTER / JACK ASSEMBLY NOTES:

1. JACK SHALL BE SIDEWIND TYPE HAVING A LIFTING CAPACITY OF 1000LBS AND THROW DISTANCE OF 18" (457)
2. SWIVEL CASTER SHALL BE STEEL
3. THE LOCATION OF THE JACK MOUNT IN RELATION TO THE GROUND SHALL BE DETERMINED BY THE JACK SIZE AND MANUFACTURER'S SPECIFICATIONS.

NOTE: POSITION AND ATTACH SHOES TO CHASSIS AS REQUIRED TO ACCEPT FORWARD END OF 6" x 4" (152x102) BOX BEAMS

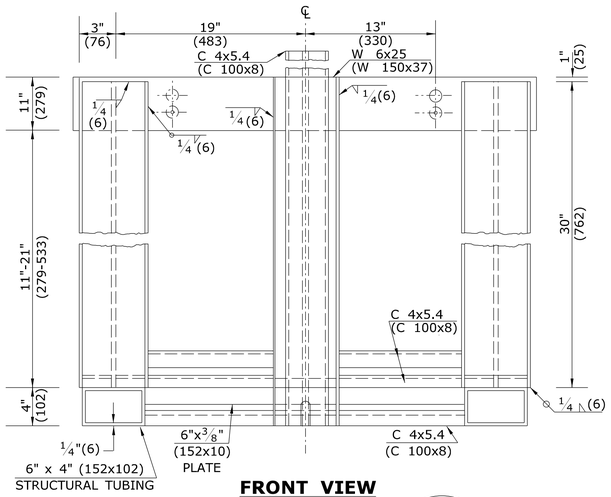

FRONT VIEW

SECTION B

CYLINDER 1 NOT SHOWN

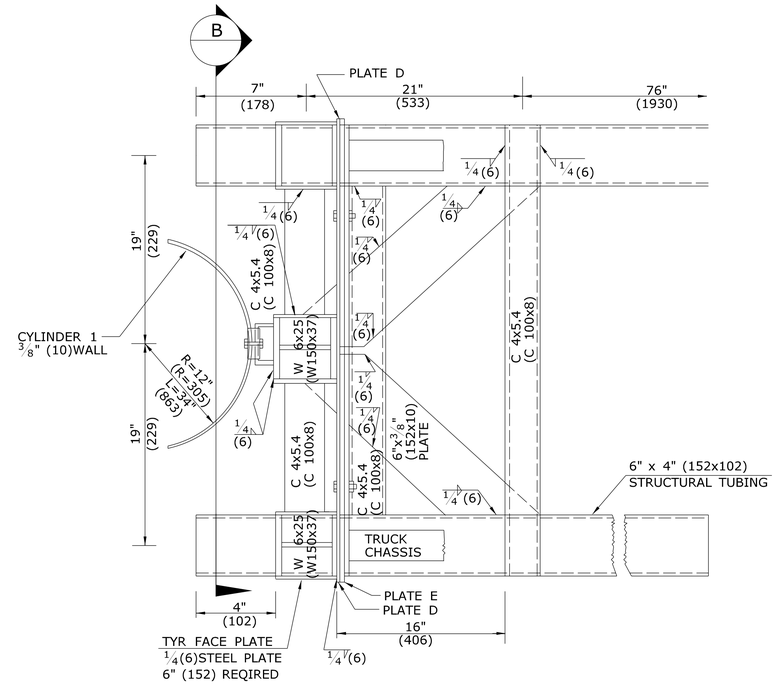

TOP VIEW

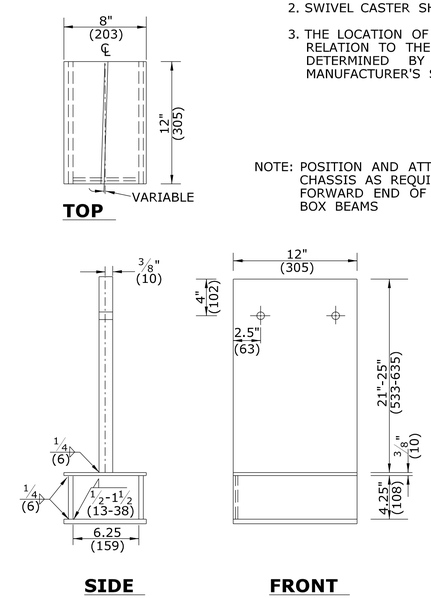

SUPPORT SHOE (2 REQUIRED)
A36 STEEL 3/8" (10)

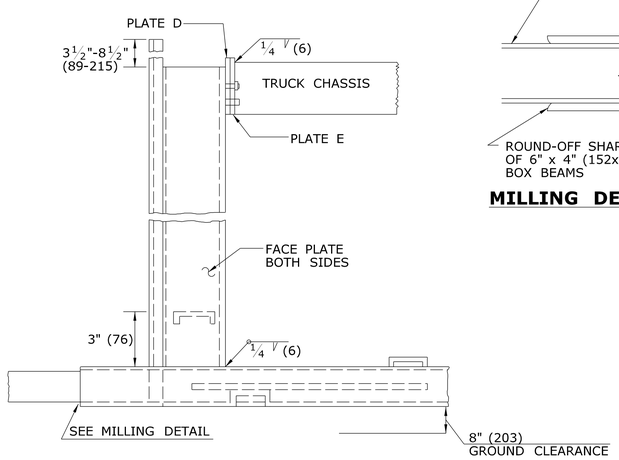

SIDE VIEW

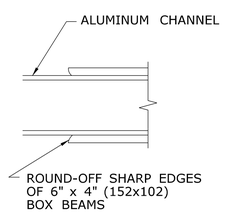

MILLING DETAIL

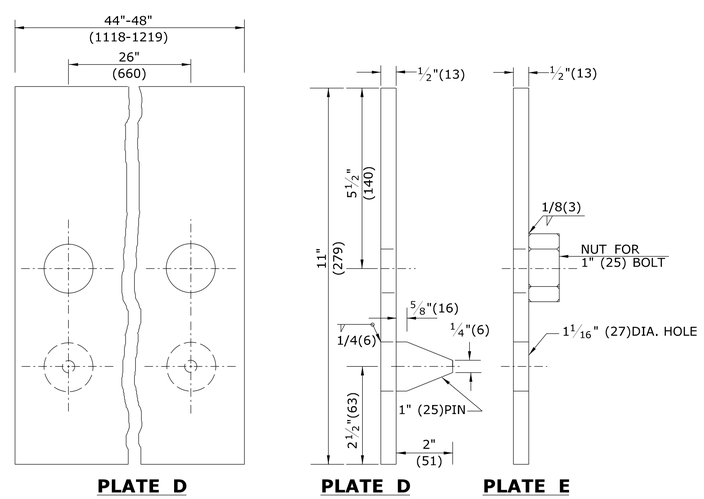

ATTACHMENT TO TRUCK
ALIGNMENT PIN DETAIL

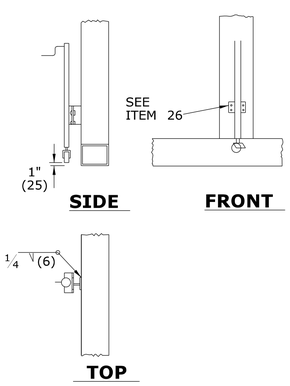

CASTER DETAIL

STEEL GUIDE FRAME DETAILS

ALL METRIC DIMENSIONS ARE IN MILLIMETERS (mm) UNLESS OTHERWISE NOTED.

REV.	DATE	REVISION DESCRIPTION
-	-	-
-	-	-
-	-	-
-	-	-
-	-	-
-	-	-

THE INFORMATION, INCLUDING ESTIMATED QUANTITIES OF WORK, SHOWN ON THESE SHEETS IS BASED ON LIMITED INVESTIGATIONS BY THE STATE AND IS IN NO WAY WARRANTED TO INDICATE THE CONDITIONS OF ACTUAL QUANTITIES OF WORK WHICH WILL BE REQUIRED.

Plotted Date: 9/30/2010

NOT TO SCALE

STATE OF CONNECTICUT
DEPARTMENT OF TRANSPORTATION

Filename: CTDOT_HIGHWAY_STD.dgn Model: 76 - HW-1806_01b

SUBMITTED BY: NAME/DATE/TIME:
Digitally signed by Leo Fontaine
DN: c=US, st=Connecticut, l=Newington, ou=Department of Transportation, email=Leo.Fontaine@ct.gov, o=State of Connecticut, cn=Leo Fontaine
Date: 2010.10.16 15:08:27 -04'00'

APPROVED BY: NAME/DATE/TIME:
James H. Norman
Digitally signed by James H. Norman
DN: c=US, st=CT, l=Newington, ou=Department of Transportation, email=james.norman@ct.gov, o=State of Connecticut, cn=James H. Norman
Date: 2010.10.18 09:03:36 -04'00'

CTDOT
STANDARD SHEET

OFFICE OF ENGINEERING

STANDARD SHEET TITLE:
CT TRUCK MOUNTED IMPACT ATTENUATOR SHEET 2

STANDARD SHEET NO.:
HW-1806_01b

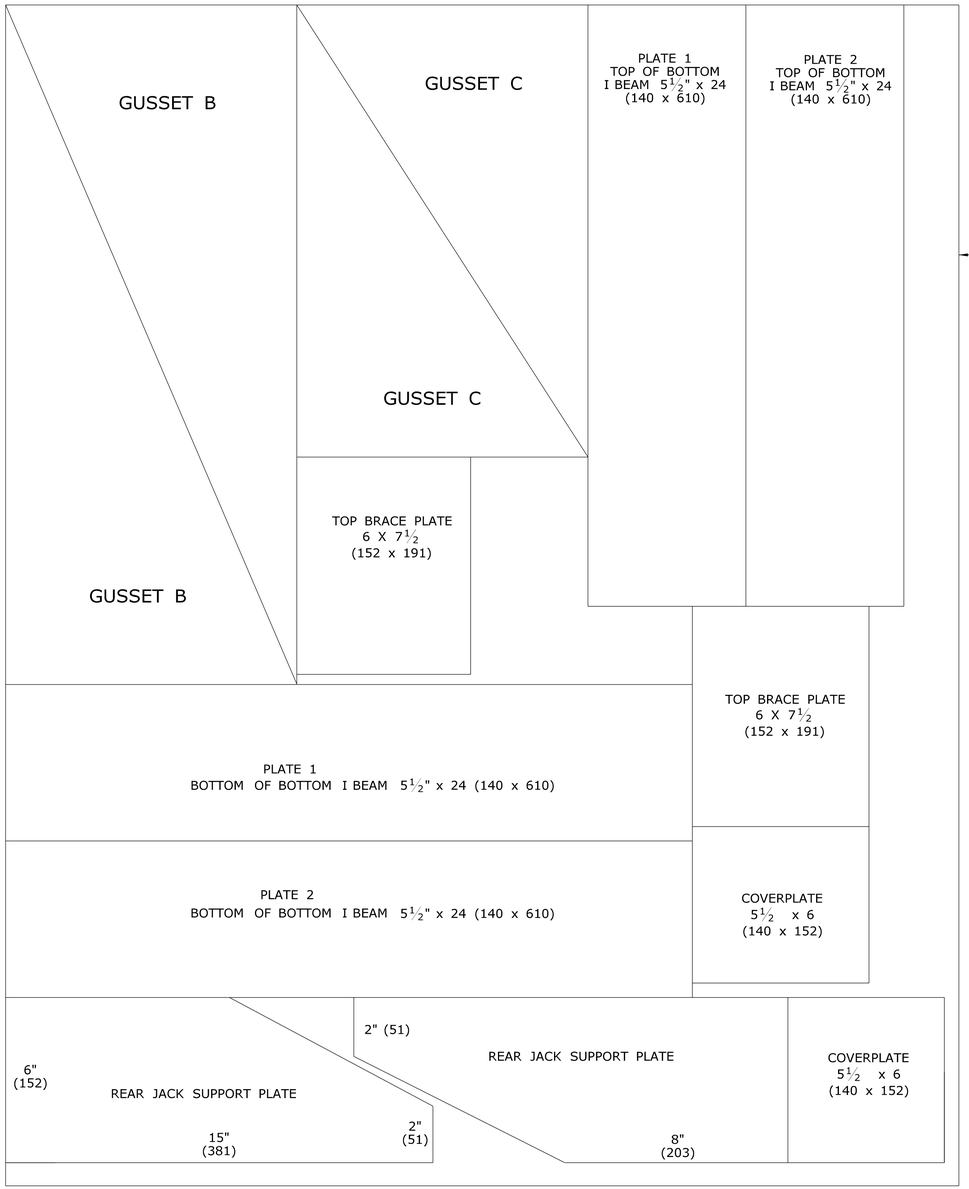

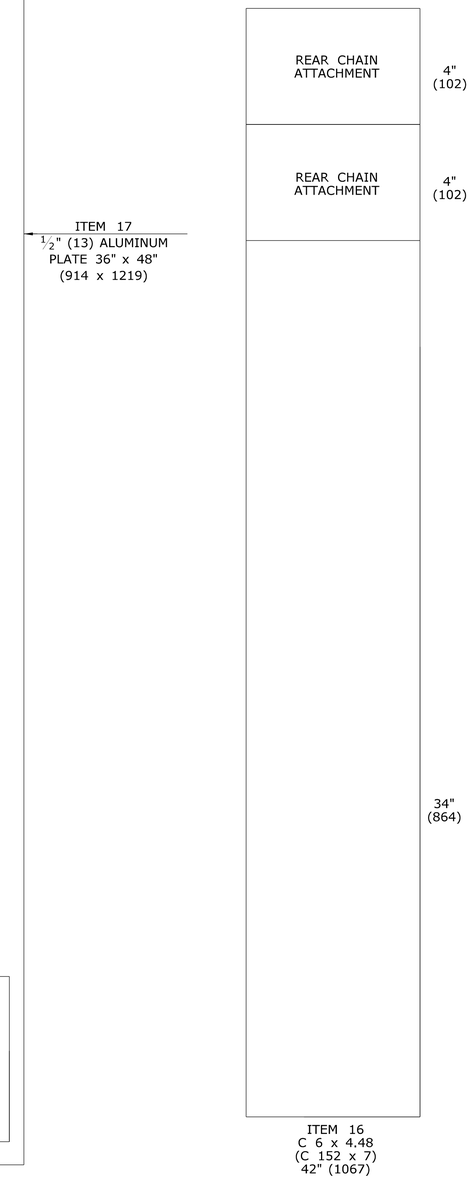

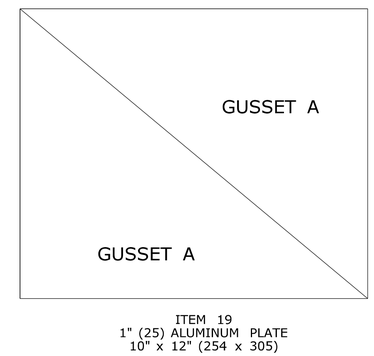

CUTTING PATTERN

ALL METRIC DIMENSIONS ARE IN MILLIMETERS (mm) UNLESS OTHERWISE NOTED.

REV.	DATE	REVISION DESCRIPTION
-	-	-
-	-	-
-	-	-
-	-	-
-	-	-
-	-	-

THE INFORMATION, INCLUDING ESTIMATED QUANTITIES OF WORK, SHOWN ON THESE SHEETS IS BASED ON LIMITED INVESTIGATIONS BY THE STATE AND IS IN NO WAY WARRANTED TO INDICATE THE CONDITIONS OF ACTUAL QUANTITIES OF WORK WHICH WILL BE REQUIRED.

Plotted Date: 9/30/2010

NOT TO SCALE

STATE OF CONNECTICUT
DEPARTMENT OF TRANSPORTATION

Filename: CTDOT_HIGHWAY_STD.dgn Model: 77 - HW-1806_01c

SUBMITTED BY: NAME/DATE/TIME:

Digitally signed by Leo Fontaine
DN: c=US, st=Connecticut, l=Newington, ou=Department of Transportation, email=leo.fontaine@ct.gov, o=State of Connecticut, cn=Leo Fontaine
Date: 2010.10.16 15:08:49 -04'00'

APPROVED BY: NAME/DATE/TIME:

James H. Norman

Digitally signed by James H. Norman
DN: c=US, st=CT, l=Newington, ou=Department of Transportation, email=james.norman@ct.gov, o=State of Connecticut, cn=James H. Norman
Date: 2010.10.14 09:03:13 -05'00'

CTDOT
STANDARD SHEET

OFFICE OF ENGINEERING

STANDARD SHEET TITLE:

CT TRUCK MOUNTED IMPACT ATTENUATOR SHEET 3

STANDARD SHEET NO.:

HW-1806_01c