05 - CIVIL
INDEX OF DRAWINGS

DRAWING NUMBER	DRAWING TITLE	DRAWING NUMBER	DRAWING TITLE
C-001	INDEX OF DRAWINGS		
C-002	SITE PLAN- FARMINGTON		
C-003	MOTOR FUEL ISLAND PLAN- FARMINGTON		
C-004	MOTOR FUEL TANK DETAILS- FARMINGTON		
C-005	TEMPORARY FACILITIES PLAN- WATERBURY		
C-006	TEMPORARY FACILITIES DETAILS- WATERBURY		
C-007	SITE PLAN- WATERBURY		
C-008	MOTOR FUEL ISLAND PLAN- WATERBURY		
C-009	MOTOR FUEL TANK DETAILS- WATERBURY		
C-010	OIL-WATER SEPARATOR- WATERBURY		
C-011	MOTOR FUEL ISLAND DETAILS- SHARED		

THE DESIGN APPEARS TO CONFORM TO APPLICABLE CRITERIA. APPROVAL IS NOT TO BE CONSTRUED TO MEAN THAT ALL ASPECTS OF THE DESIGN HAVE BEEN PERSONALLY CHECKED BY THE UNDERSIGNED.

Gregory Dorosh, P.E.
2015.08.12
07:49:52-04'00'

TRANSPORTATION MANAGER

REV.	DATE	REVISION DESCRIPTION	SHEET NO.

THE INFORMATION, INCLUDING ESTIMATED QUANTITIES OF WORK, SHOWN ON THESE SHEETS IS BASED ON LIMITED INVESTIGATIONS BY THE STATE AND IS IN NO WAY WARRANTED TO INDICATE THE CONDITIONS OF ACTUAL QUANTITIES OF WORK WHICH WILL BE REQUIRED.

Plotted Date: 8/11/2015

DESIGNER/DRAFTER: ME
CHECKED BY: SK

STATE OF CONNECTICUT
DEPARTMENT OF TRANSPORTATION

Filename: ...\C001_CT_Sheet_0174-0388.dgn

SIGNATURE/ BLOCK:
OFFICE OF ENGINEERING
APPROVED BY:

PROJECT TITLE:
FARMINGTON AND WATERBURY MAINTENANCE FACILITIES TANK REPLACEMENT

TOWN: FARMINGTON AND WATERBURY

DRAWING TITLE: INDEX OF DRAWINGS

PROJECT NO. 174-388
DRAWING NO. C-001
SHEET NO. 05.01

ABBREVIATIONS

AST	ABOVEGROUND STORAGE TANK
AWG	AMERICAN WIRE GAUGE
BCLC	BITUMINOUS CONCRETE LIP CURB
℄	CENTER LINE
EWT&B	EACH WAY TOP & BOTTOM
FMU	FUEL MANAGEMENT UNIT
GND	GROUND
HMA	HOT MIX ASPHALT
i.d.	INSIDE DIAMETER
MAX	MAXIMUM
MIN	MINIMUM
NO.	NUMBER
o.c.	ON CENTER
o.d.	OUTSIDE DIAMETER
RGSC	RIGID GALVANIZED STEEL CONDUIT
TYP	TYPICAL
U.N.O.	UNLESS NOTED OTHERWISE
UST	UNDERGROUND STORAGE TANK
W/	WITH
W.W.R.	WITH WIRE REINFORCEMENT

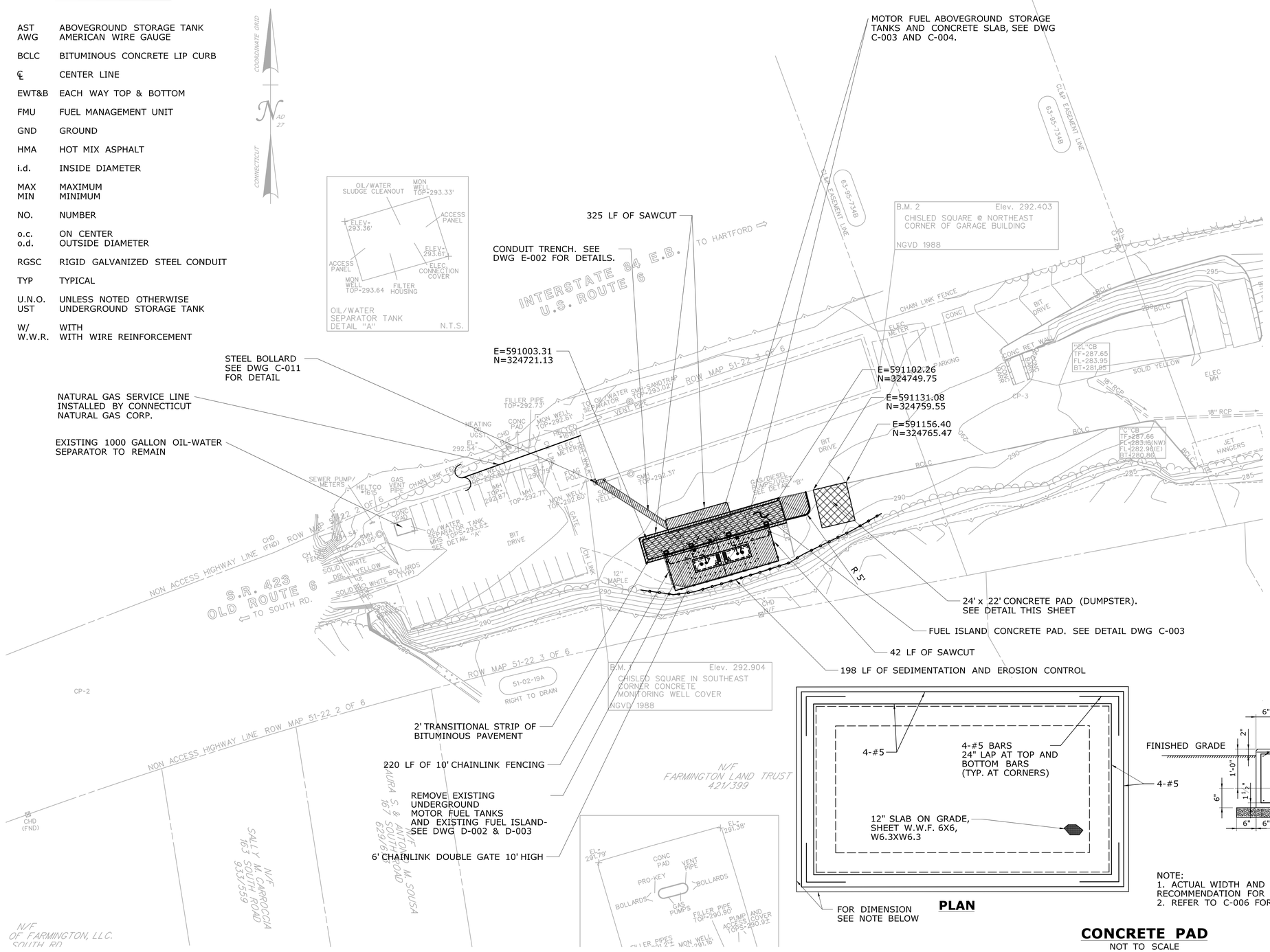

LEGEND

- CONCRETE PAD. SEE DETAIL THIS SHEET
- BITUMINOUS CONCRETE PAVEMENT. SEE DETAIL THIS SHEET
- CONCRETE APRON. SEE DETAIL DWG C-003

NOTES:

1. SIZE AND LOCATION OF BURIED PIPES AND UTILITIES SHOULD BE VERIFIED IN FIELD.
2. ALL DISTURBED AREAS SHALL BE RESTORED WITH BITUMINOUS CONCRETE PAVEMENT.
3. CONCRETE APRON AND SURROUNDING BITUMINOUS CONCRETE PAVEMENT SHALL BE GRADED TO MATCH EXISTING PAVEMENT AND SHALL BE SLOPED AS TO DIRECT STORM RUNOFF AWAY FROM MOTOR FUEL DISPENSERS.
4. CONTRACTOR SHALL CONTACT "CALL BEFORE YOU DIG" (1-800-922-4455) FOR UNDERGROUND UTILITY INFORMATION A MINIMUM OF 72 HOURS PRIOR TO START OF CONTSTRUCTION.
5. COORDINATE WITH ENGINEER TO MAINTAIN VEHICLE ACCESS TO BAY DOORS IN EXISTING MAINTENANCE BUILDING.

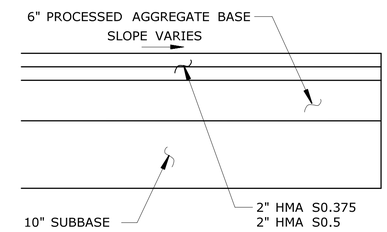

BITUMINOUS CONCRETE PAVEMENT

NOT TO SCALE

PLAN

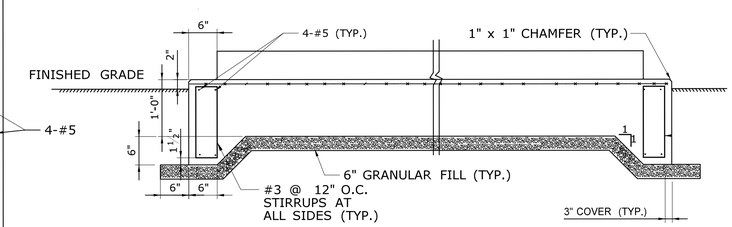

SECTION

NOTE:
1. ACTUAL WIDTH AND LENGTH OF EQUIPEMENT PADS BASED UPON MANUFACTURER'S RECOMMENDATION FOR THE SPECIFIC EQUIPMENT TO BE INSTALLED.
2. REFER TO C-006 FOR DUMPSTER PAD DIMENSIONS.

CONCRETE PAD

NOT TO SCALE

REV.	DATE	REVISION DESCRIPTION	SHEET NO.

THE INFORMATION, INCLUDING ESTIMATED QUANTITIES OF WORK, SHOWN ON THESE SHEETS IS BASED ON LIMITED INVESTIGATIONS BY THE STATE AND IS IN NO WAY WARRANTED TO INDICATE THE CONDITIONS OF ACTUAL QUANTITIES OF WORK WHICH WILL BE REQUIRED.

Plotted Date: 8/11/2015

DESIGNER/DRAFTER: ME
CHECKED BY: SK
SCALE IN FEET 0 40 80
SCALE 1"=40'

STATE OF CONNECTICUT
DEPARTMENT OF TRANSPORTATION

Filename: ...\C002_CT_Sheet Model_0174-0388.dgn

SIGNATURE/BLOCK: OFFICE OF ENGINEERING
APPROVED BY:

PROJECT TITLE: FARMINGTON AND WATERBURY MAINTENANCE FACILITIES TANK REPLACEMENT

TOWN: FARMINGTON

DRAWING TITLE: SITE PLAN - FARMINGTON

PROJECT NO. 174-388
DRAWING NO. C-002
SHEET NO. 05.02

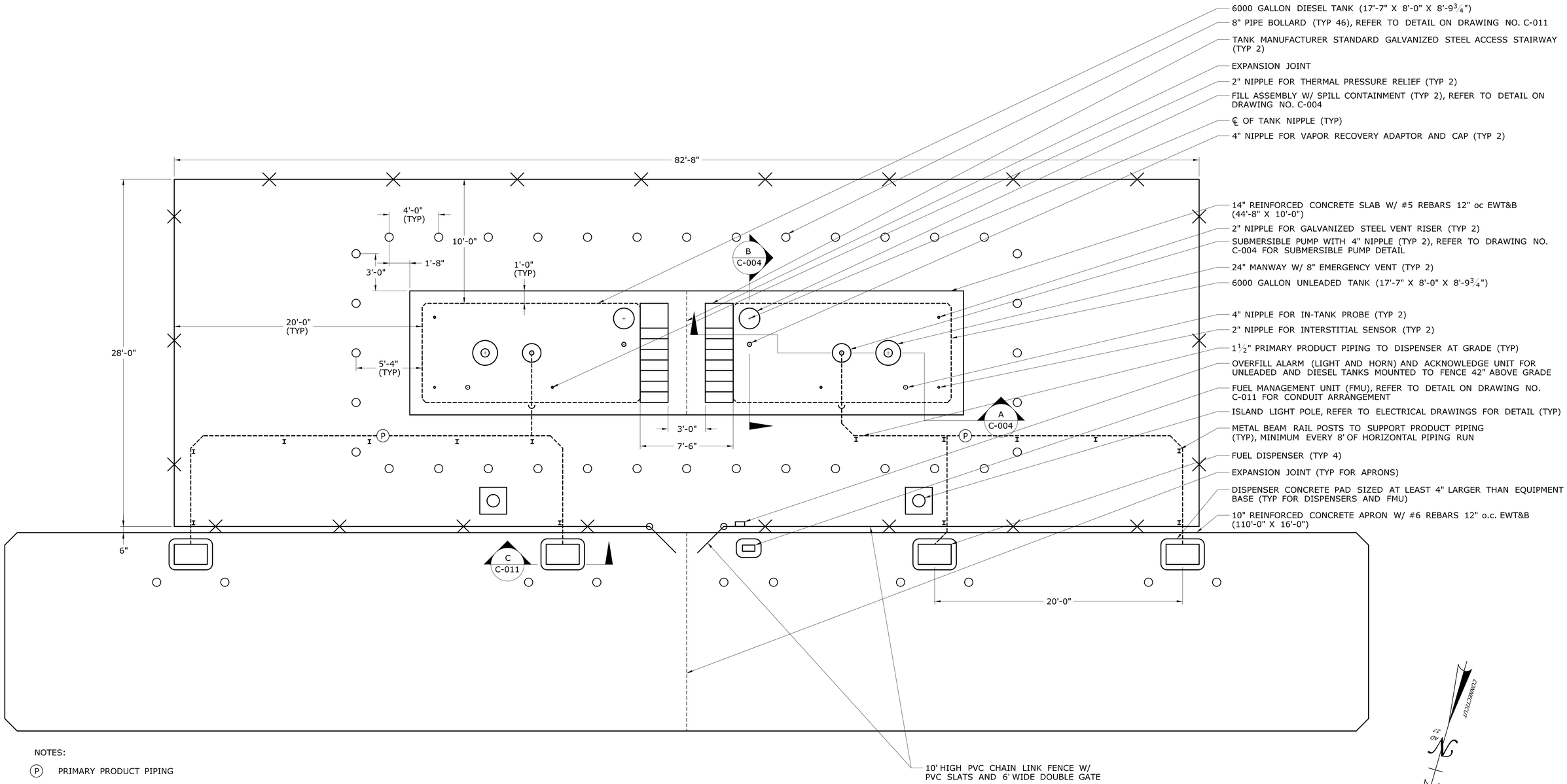

NOTES:

(P) PRIMARY PRODUCT PIPING

1. THE DESIGNED TANK DIMENSIONS AND SUPPORT LEG LOCATIONS ARE BASED ON CONVAULT. ACTUAL SLAB DIMENSIONS SHALL BE SIZED ON THE APPROVED TANK DIMENSIONS AND SUPPORT LEG LOCATIONS.
2. THE TANK NIPPLE ARRANGEMENT IS BASED ON CONVAULT TANKS. ACTUAL TANK NIPPLE ARRANGEMENT SHALL BE DESIGNED AS NECESSARY BASED ON THE APPROVED TANK MANUFACTURER.
3. REFER TO DRAWING NO. C-004 FOR MOTOR FUEL TANK DETAILS AND DRAWING NO. C-011 FOR MOTOR FUEL ISLAND DETAILS.
4. INSTALL SALVAGED "FUEL SYSTEM INFORMATION" SIGN FROM EXISTING FUEL ISLAND AS DIRECTED BY ENGINEER.
5. SUPPORT PRODUCT PIPING WITH GALVANIZED STRUT MAST AND PIPE CLAMP MOUNTED TO THE TANK, TANK PAD AND METAL BEAM RAIL POSTS.
6. LOCATE FIRE EXTINGUISHER IN FIRE-PROTECTION CABINET AS DIRECTED BY ENGINEER.

REV.	DATE	REVISION DESCRIPTION	SHEET NO.

THE INFORMATION, INCLUDING ESTIMATED QUANTITIES OF WORK, SHOWN ON THESE SHEETS IS BASED ON LIMITED INVESTIGATIONS BY THE STATE AND IS IN NO WAY WARRANTED TO INDICATE THE CONDITIONS OF ACTUAL QUANTITIES OF WORK WHICH WILL BE REQUIRED.

Plotted Date: 8/11/2015

DESIGNER/DRAFTER: **JAB**
CHECKED BY: **JSB**
SCALE: ¼" = 1'-0"

STATE OF CONNECTICUT
DEPARTMENT OF TRANSPORTATION

Filename: ...\C003_FA_CIV_Sheet Model_0174-0388.dgn

SIGNATURE/ BLOCK:
OFFICE OF ENGINEERING
APPROVED BY:

PROJECT TITLE:
FARMINGTON AND WATERBURY MAINTENANCE FACILITIES TANK REPLACEMENT

TOWN: **FARMINGTON**

DRAWING TITLE:
MOTOR FUEL ISLAND PLAN

PROJECT NO. **174-388**
DRAWING NO. **C-003**
SHEET NO. **05.03**

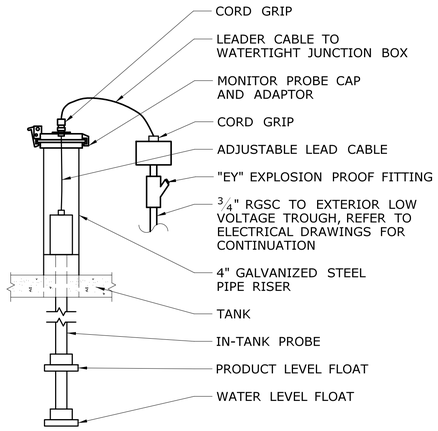

IN-TANK PROBE DETAIL

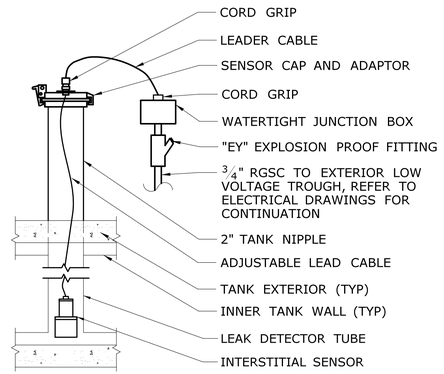

INTERSTITIAL SENSOR DETAIL

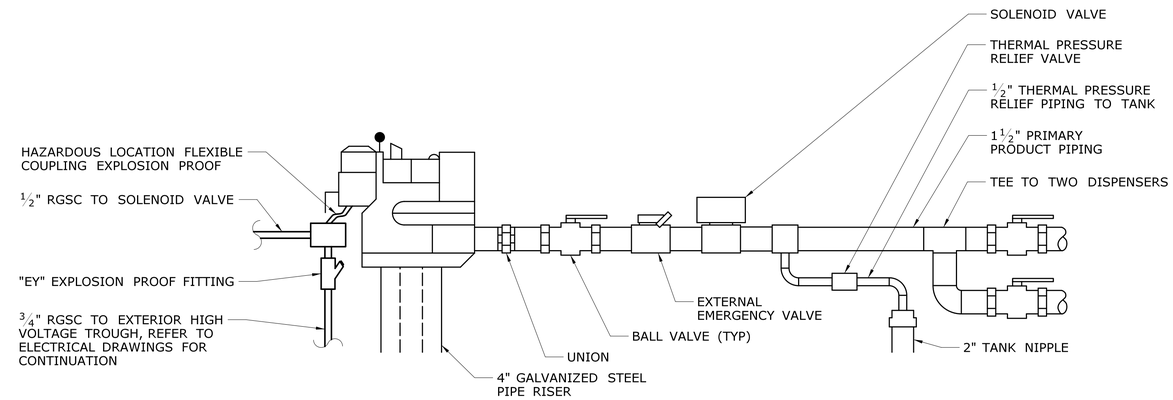

SUBMERSIBLE PUMP DETAIL

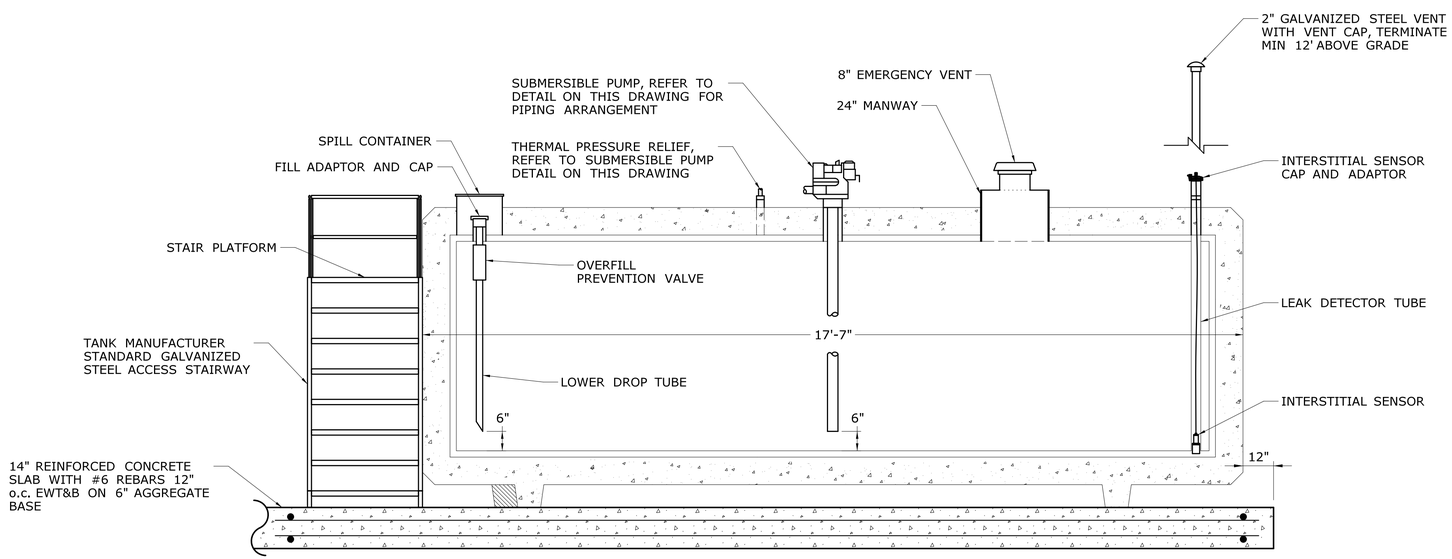

SECTION A C-003

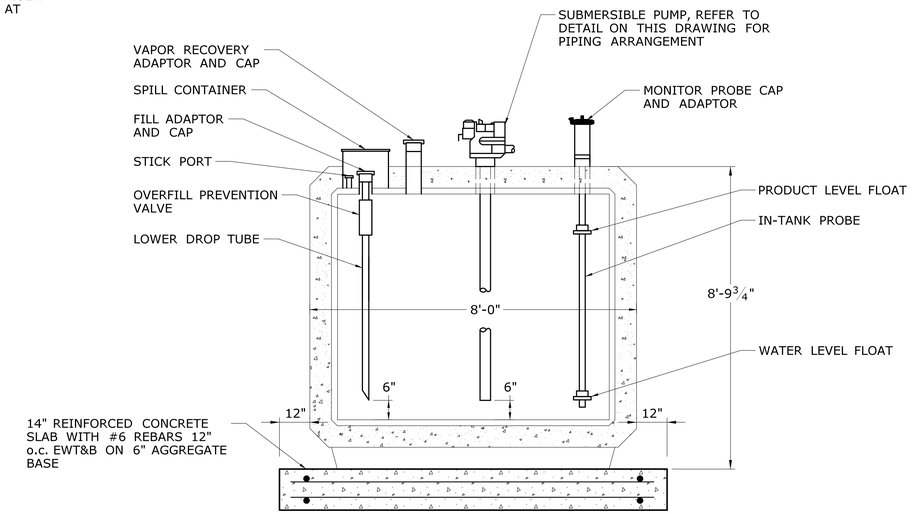

SECTION B C-003

NOTES:

1. THE DESIGNED TANK DIMENSIONS AND SUPPORT LEG LOCATIONS ARE BASED ON CONVAULT. ACTUAL SLAB DIMENSIONS SHALL BE SIZED BASED ON THE APPROVED TANK DIMENSIONS AND SUPPORT LEG LOCATIONS.
2. THE TANK NIPPLE ARRANGEMENT IS BASED ON CONVAULT TANKS. ACTUAL TANK NIPPLE ARRANGEMENT SHALL BE DESIGNED AS NECESSARY BASED ON THE APPROVED TANK MANUFACTURER.
3. ALL CONDUITS SHALL BE PROVIDED WITH EXPLOSION PROOF FITTINGS AND SEALED AS REQUIRED IN ACCORDANCE WITH NFPA 70.

MOTOR FUEL ABOVEGROUND STORAGE TANK DETAIL

REV.	DATE	REVISION DESCRIPTION	SHEET NO.

THE INFORMATION, INCLUDING ESTIMATED QUANTITIES OF WORK, SHOWN ON THESE SHEETS IS BASED ON LIMITED INVESTIGATIONS BY THE STATE AND IS IN NO WAY WARRANTED TO INDICATE THE CONDITIONS OF ACTUAL QUANTITIES OF WORK WHICH WILL BE REQUIRED.

Plotted Date: 8/11/2015

DESIGNER/DRAFTER: JAB
CHECKED BY: JSB
NOT TO SCALE

STATE OF CONNECTICUT
DEPARTMENT OF TRANSPORTATION

Filename: ..\C004_FA_CIV_Sheet Model_0174-0388.dgn

SIGNATURE/BLOCK: OFFICE OF ENGINEERING
APPROVED BY:

PROJECT TITLE: FARMINGTON AND WATERBURY MAINTENANCE FACILITIES TANK REPLACEMENT

TOWN: FARMINGTON

DRAWING TITLE: MOTOR FUEL TANK DETAILS - FARMINGTON

PROJECT NO. 174-388
DRAWING NO. C-004
SHEET NO. 05.04

NOTES:

1.STATE PERSONNEL SHALL HAVE ACCESS TO PERMANENT OR TEMPORARY DIESEL MOTOR FUEL AT ALL TIMES. NO PORTION OF THE TEMPORARY DIESEL MOTOR FUEL SYSTEM SHALL BE DEMOLISHED UNTIL THE PERMANENT FUEL FACILITY IS INSTALLED, TESTED AND ACCEPTED BY THE ENGINEER.

2. THE DEPARTMENT WILL SUPPLY DIESEL FUEL TO FILL THE TEMPORARY TANK UPON ITS ACCEPTANCE BY THE ENGINEER.

3.THE DEPARTMENT WILL EMPTY THE TEMPORARY DIESEL FUEL TANK AND THE CONTRACTOR SHALL TRANSPORT IT TO THE DEPARTMENT'S MAINTENANCE FACILITY LOCATED AT 1640 SAYBROOK ROAD, HADDAM, CT 06438.

4.REFER TO DWG ED-003 FOR TEMPORARY FACILITIES ELECTRICAL PLANS.

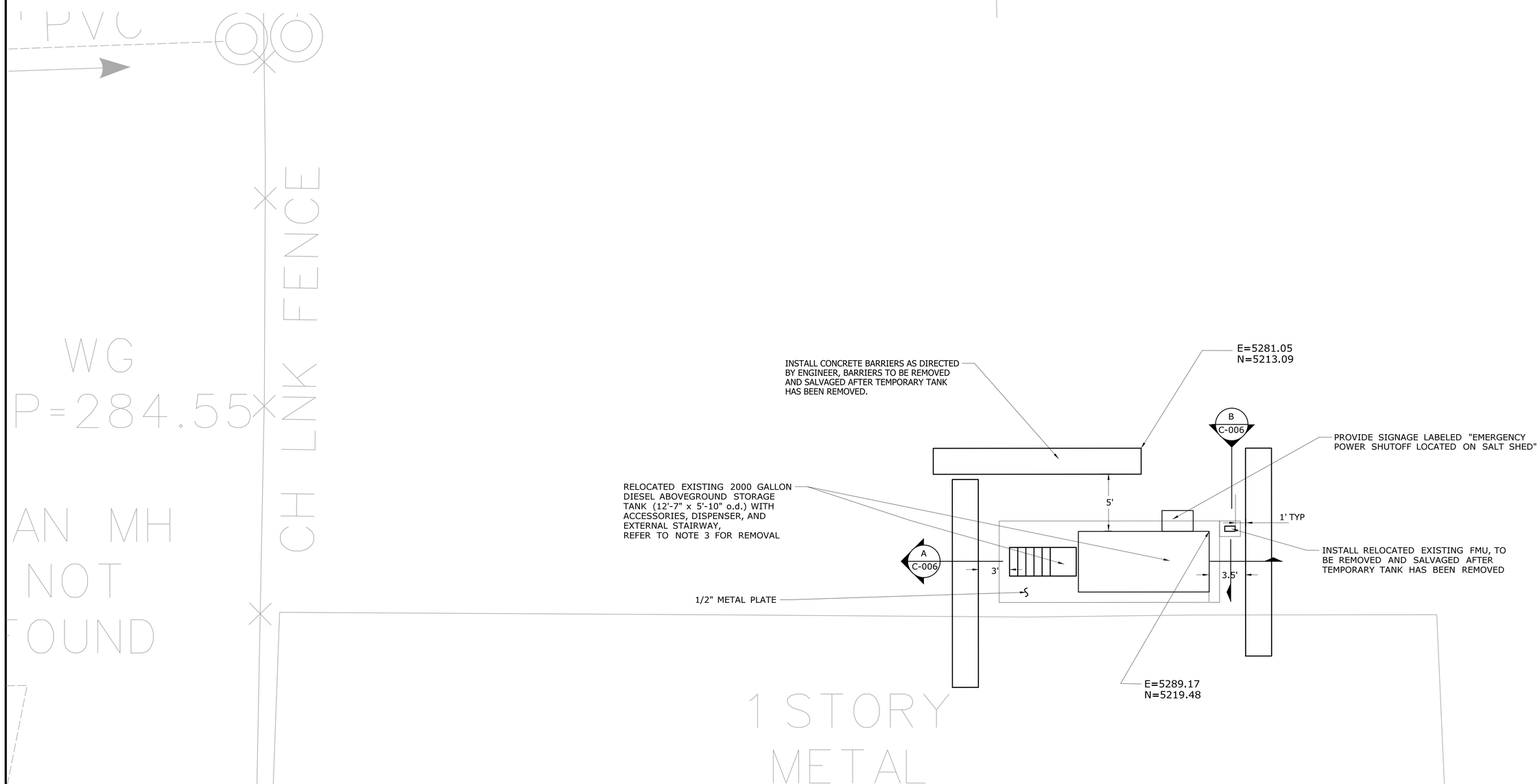

REV.	DATE	REVISION DESCRIPTION	SHEET NO.

THE INFORMATION, INCLUDING ESTIMATED QUANTITIES OF WORK, SHOWN ON THESE SHEETS IS BASED ON LIMITED INVESTIGATIONS BY THE STATE AND IS IN NO WAY WARRANTED TO INDICATE THE CONDITIONS OF ACTUAL QUANTITIES OF WORK WHICH WILL BE REQUIRED.

Plotted Date: 8/11/2015

DESIGNER/DRAFTER: **ME**

CHECKED BY: **SK**

SCALE: 1" = 5' 0"

STATE OF CONNECTICUT
DEPARTMENT OF TRANSPORTATION

Filename: ...\C005_CT_Sheet_0174-0388.dgn

SIGNATURE/ BLOCK: **OFFICE OF ENGINEERING**

APPROVED BY:

PROJECT TITLE: **FARMINGTON AND WATERBURY MAINTENANCE FACILITIES TANK REPLACEMENT**

TOWN: **WATERBURY**

DRAWING TITLE: **TEMPORARY FACILITIES PLAN - WATERBURY**

PROJECT NO. **174-388**

DRAWING NO. **C-005**

SHEET NO. **05.05**

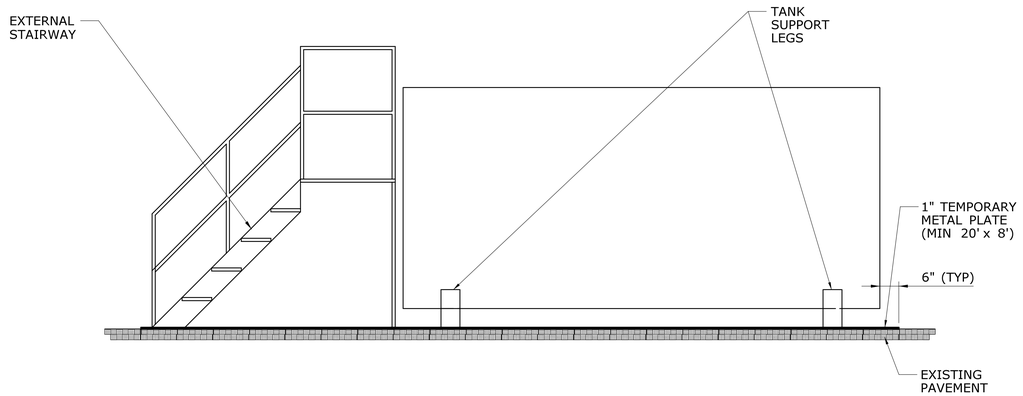

SECTION A C-002
SCALE: ½" = 1'-0"

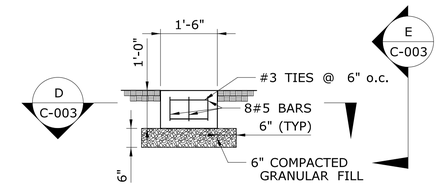

SECTION B C-002
SCALE: ½" = 1'-0"

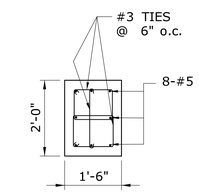

SECTION (TYP.) D C-003
SCALE ½"=1'-0"

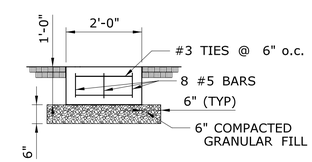

SECTION E C-003
SCALE: ½" = 1'-0"

REV.	DATE	REVISION DESCRIPTION	SHEET NO.

THE INFORMATION, INCLUDING ESTIMATED QUANTITIES OF WORK, SHOWN ON THESE SHEETS IS BASED ON LIMITED INVESTIGATIONS BY THE STATE AND IS IN NO WAY WARRANTED TO INDICATE THE CONDITIONS OF ACTUAL QUANTITIES OF WORK WHICH WILL BE REQUIRED.

Plotted Date: 8/11/2015

DESIGNER/DRAFTER: **ME**
CHECKED BY: **SK**
SCALE AS NOTED

STATE OF CONNECTICUT
DEPARTMENT OF TRANSPORTATION

Filename: ...\C006_CT_Sheet Model_0174-0388.dgn

SIGNATURE/ BLOCK:
OFFICE OF ENGINEERING
APPROVED BY:

PROJECT TITLE:
FARMINGTON AND WATERBURY MAINTENANCE FACILITIES TANK REPLACEMENT

TOWN: **WATERBURY**

DRAWING TITLE:
TEMPORARY FACILITIES DETAILS - WATERBURY

PROJECT NO. **174-388**
DRAWING NO. **C-006**
SHEET NO. **05.06**

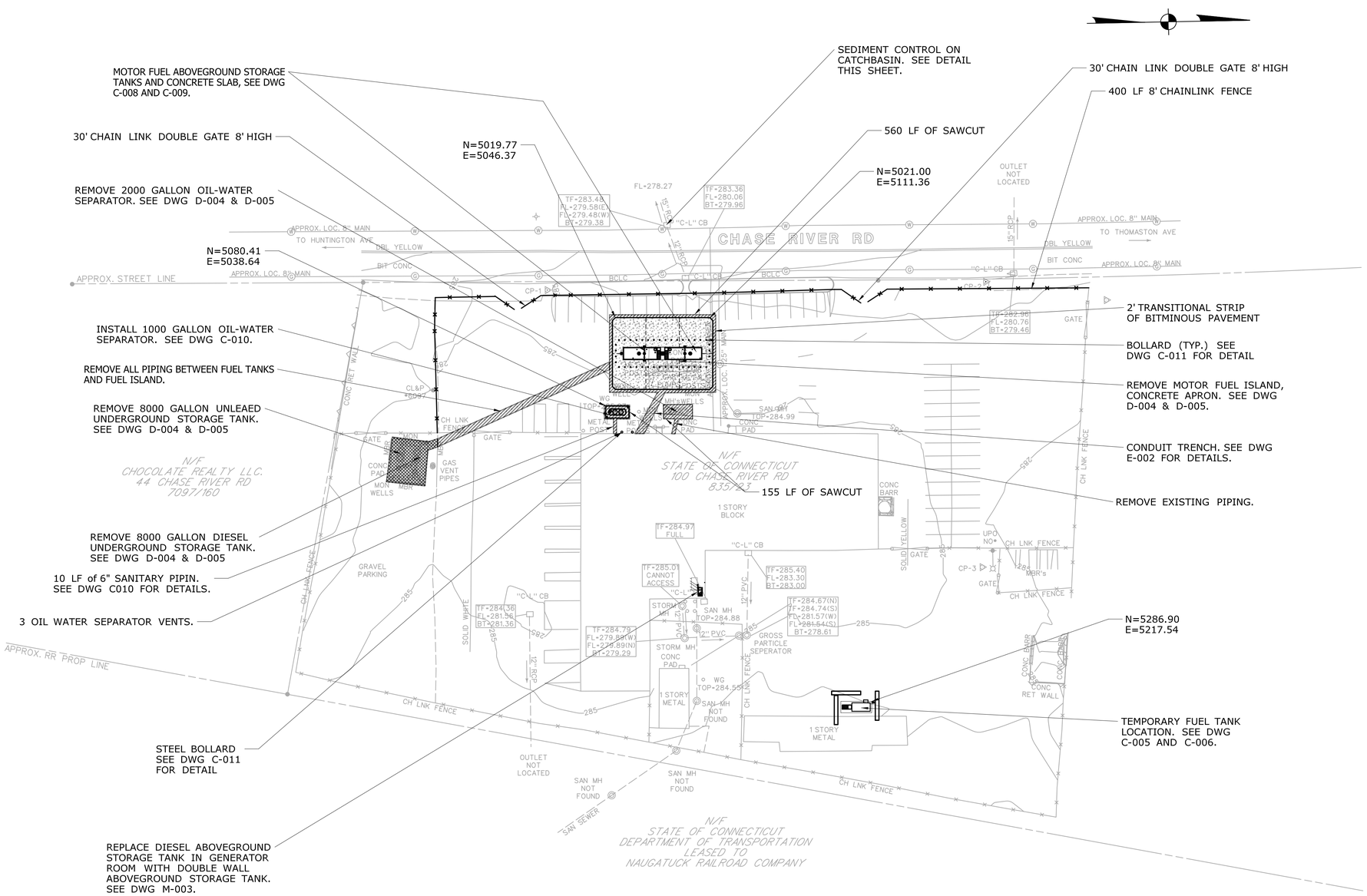

LEGEND

- 6" PROCESSED AGGREGATE BASE
- BITUMINOUS CONCRETE PAVEMENT. SEE DETAIL THIS SHEET
- CONCRETE APRON. SEE DETAIL DWG C-008

NOTES:

1. SIZE AND LOCATION OF BURIED PIPES AND UTILITIES SHOULD BE VERIFIED IN FIELD.
2. ALL DISTURBED AREAS SHALL BE RESTORED WITH BITUMINOUS CONCRETE PAVEMENT.
3. CONCRETE APRON AND SURROUNDING BITUMINOUS CONCRETE PAVEMENT SHALL BE GRADED TO MATCH EXISTING PAVEMENT AND SHALL BE SLOPED AS TO DIRECT STORM RUNOFF AWAY FROM MOTOR FUEL DISPENSERS.
4. CONTRACTOR SHALL CONTACT "CALL BEFORE YOU DIG" (1-800-922-4455) FOR UNDERGROUND UTILITY INFORMATION A MINIMUM OF 72 HOURS PRIOR TO START OF CONTSTRUCTION.
5. COORDINATE WITH ENGINEER TO MAINTAIN VEHICLE ACCESS TO BAY DOORS IN EXISTING MAINTENANCE BUILDING.

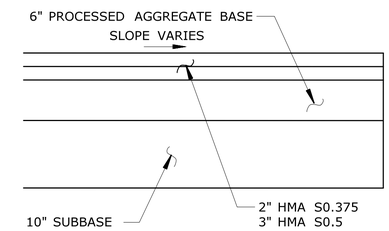

BITUMINOUS CONCRETE PAVEMENT

NOT TO SCALE

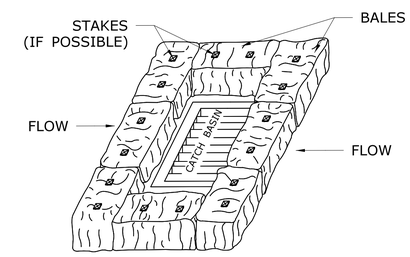

HAYBALES - INLET PROTECTION

NOT TO SCALE

REV.	DATE	REVISION DESCRIPTION	SHEET NO.

THE INFORMATION, INCLUDING ESTIMATED QUANTITIES OF WORK, SHOWN ON THESE SHEETS IS BASED ON LIMITED INVESTIGATIONS BY THE STATE AND IS IN NO WAY WARRANTED TO INDICATE THE CONDITIONS OF ACTUAL QUANTITIES OF WORK WHICH WILL BE REQUIRED.

Plotted Date: 8/11/2015

DESIGNER/DRAFTER: **ME**

CHECKED BY: **SK**

SCALE IN FEET 0 40 80

SCALE 1"=40'

STATE OF CONNECTICUT
DEPARTMENT OF TRANSPORTATION

Filename: ...\C007_CT_Sheet_0174-0388.dgn

SIGNATURE/ BLOCK: **OFFICE OF ENGINEERING**

APPROVED BY:

PROJECT TITLE: **FARMINGTON AND WATERBURY MAINTENANCE FACILITIES TANK REPLACEMENT**

TOWN: **WATERBURY**

DRAWING TITLE: **SITE PLAN - WATERBURY**

PROJECT NO. **174-388**

DRAWING NO. **C-007**

SHEET NO. **05.07**

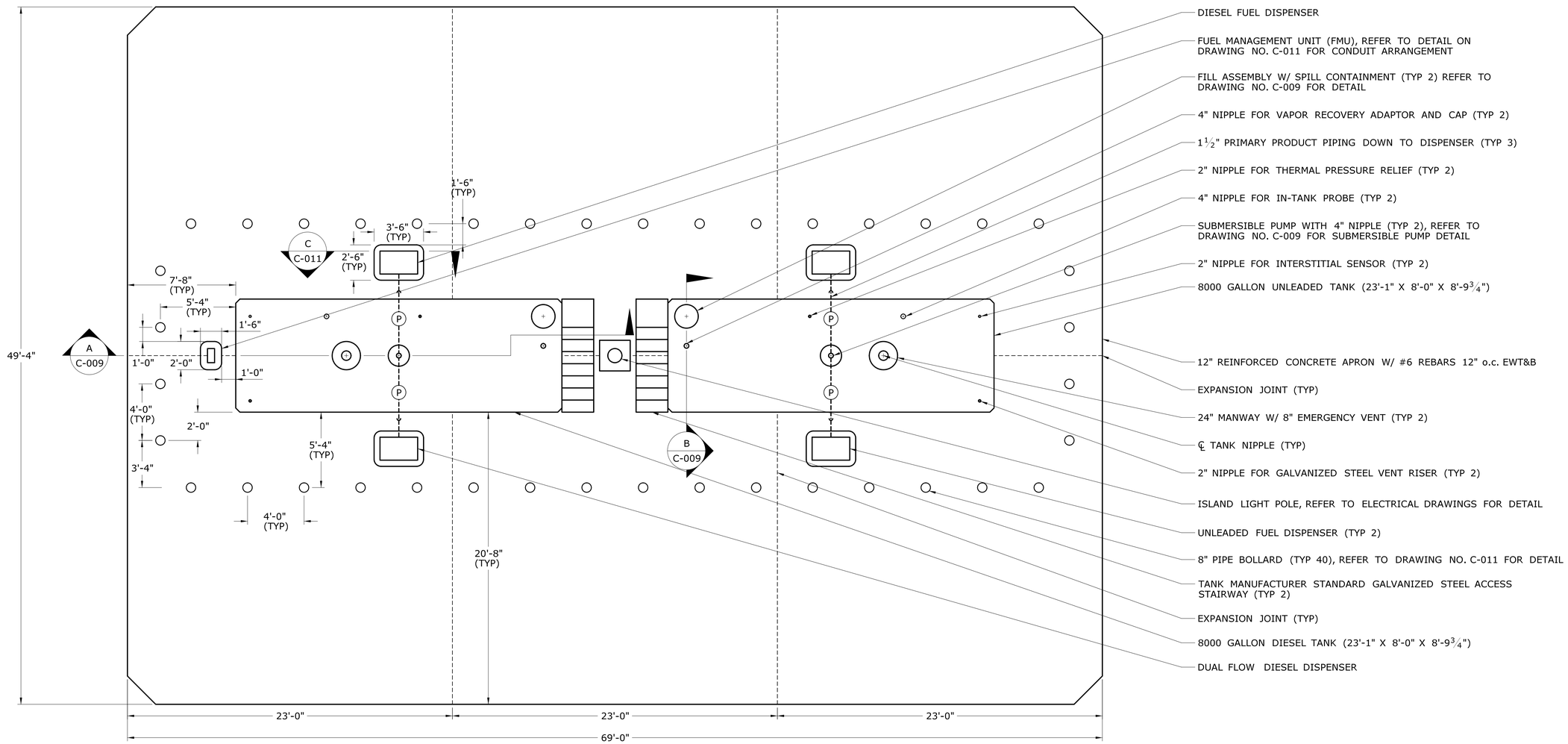

NOTES:

(P) PRIMARY PRODUCT PIPING

1. THE DESIGNED TANK DIMENSIONS AND SUPPORT LEG LOCATIONS ARE BASED ON CONVAULT. ACTUAL SLAB DIMENSIONS SHALL BE SIZED ON THE APPROVED TANK DIMENSIONS AND SUPPORT LEG LOCATIONS.
2. THE TANK NIPPLE ARRANGEMENT IS BASED ON CONVAULT TANKS. ACTUAL TANK NIPPLE ARRANGEMENT SHALL BE DESIGNED AS NECESSARY BASED ON THE APPROVED TANK MANUFACTURER.
3. REFER TO DRAWING NO. C-009 FOR MOTOR FUEL TANK DETAILS AND DRAWING NO. C-011 FOR MOTOR FUEL ISLAND DETAILS.
4. INSTALL SALVAGED "FUEL SYSTEM INFORMATION" SIGN FROM EXISTING FUEL ISLAND AS DIRECTED BY ENGINEER.
5. LOCATE FIRE EXTINGUISHER IN FIRE-PROTECTION CABINET AS DIRECTED BY ENGINEER.

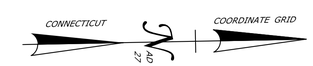

REV.	DATE	REVISION DESCRIPTION	SHEET NO.

THE INFORMATION, INCLUDING ESTIMATED QUANTITIES OF WORK, SHOWN ON THESE SHEETS IS BASED ON LIMITED INVESTIGATIONS BY THE STATE AND IS IN NO WAY WARRANTED TO INDICATE THE CONDITIONS OF ACTUAL QUANTITIES OF WORK WHICH WILL BE REQUIRED.

Plotted Date: 8/11/2015

DESIGNER/DRAFTER: JAB
CHECKED BY: JSB
SCALE: ¼" = 1'-0"

STATE OF CONNECTICUT
DEPARTMENT OF TRANSPORTATION

Filename: ...\C008_FA_CIV_Sheet Model_0174-0388.dgn

SIGNATURE/BLOCK: OFFICE OF ENGINEERING
APPROVED BY:

PROJECT TITLE: FARMINGTON AND WATERBURY MAINTENANCE FACILITIES TANK REPLACEMENT

TOWN: WATERBURY

DRAWING TITLE: MOTOR FUEL ISLAND PLAN - WATERBURY

PROJECT NO. 174-388
DRAWING NO. C-008
SHEET NO. 05.08

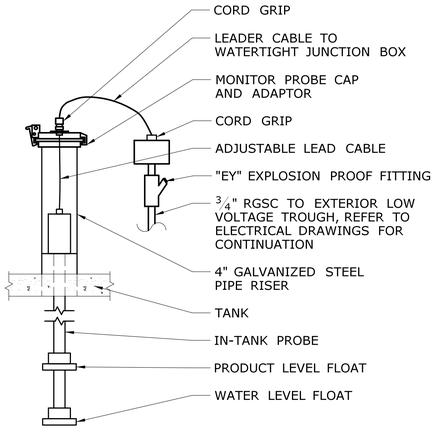

IN-TANK PROBE DETAIL

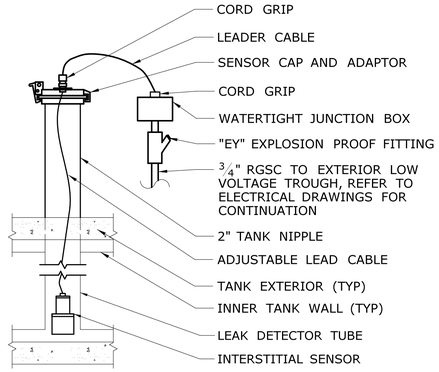

INTERSTITIAL SENSOR DETAIL

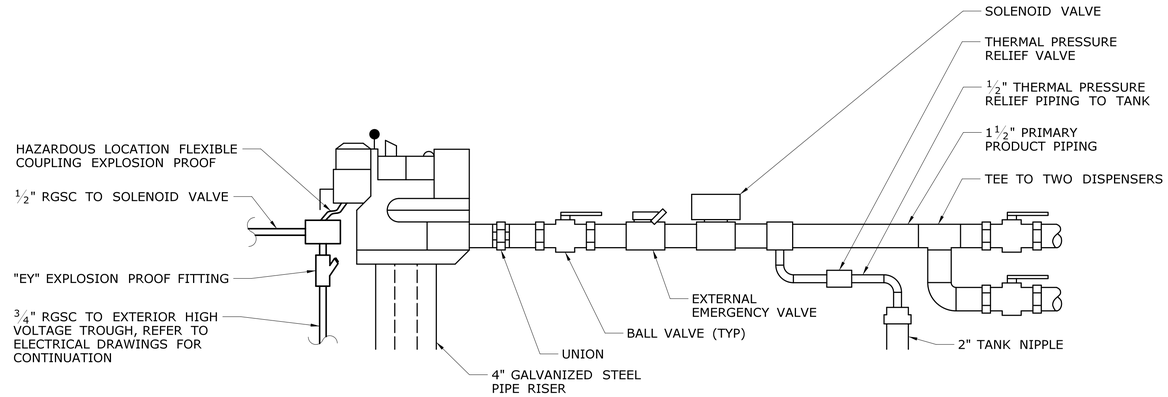

SUBMERSIBLE PUMP DETAIL

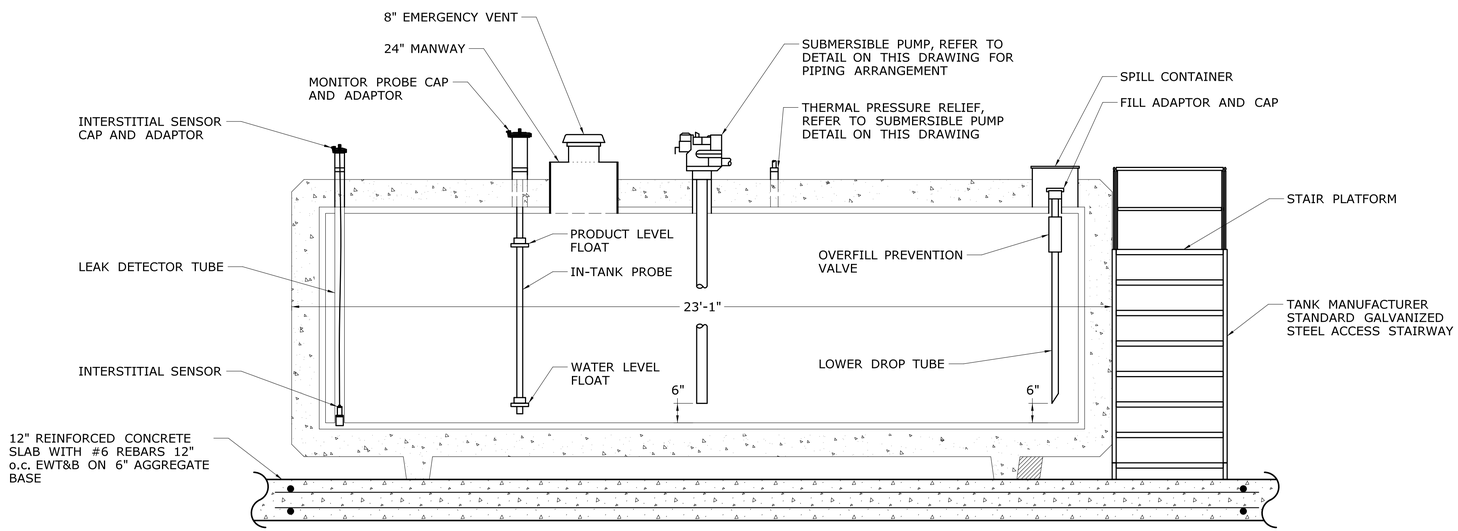

SECTION A C-008

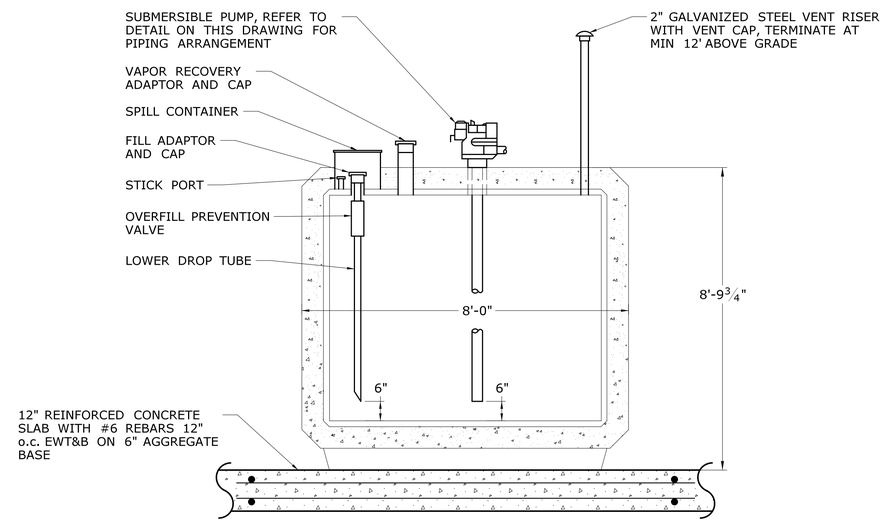

SECTION B C-008

NOTES:

1. THE DESIGNED TANK DIMENSIONS AND SUPPORT LEG LOCATIONS ARE BASED ON CONVAULT. ACTUAL SLAB DIMENSIONS SHALL BE SIZED BASED ON THE APPROVED TANK DIMENSIONS AND SUPPORT LEG LOCATIONS.
2. THE TANK NIPPLE ARRANGEMENT IS BASED ON CONVAULT TANKS. ACTUAL TANK NIPPLE ARRANGEMENT SHALL BE DESIGNED AS NECESSARY BASED ON THE APPROVED TANK MANUFACTURER.
3. ALL CONDUITS SHALL BE PROVIDED WITH EXPLOSION PROOF FITTINGS AND SEALED AS REQUIRED IN ACCORDANCE WITH NFPA 70.

MOTOR FUEL ABOVEGROUND STORAGE TANK DETAIL

REV.	DATE	REVISION DESCRIPTION	SHEET NO.

THE INFORMATION, INCLUDING ESTIMATED QUANTITIES OF WORK, SHOWN ON THESE SHEETS IS BASED ON LIMITED INVESTIGATIONS BY THE STATE AND IS IN NO WAY WARRANTED TO INDICATE THE CONDITIONS OF ACTUAL QUANTITIES OF WORK WHICH WILL BE REQUIRED.

Plotted Date: 8/11/2015

DESIGNER/DRAFTER: JAB
CHECKED BY: JSB
NOT TO SCALE

STATE OF CONNECTICUT
DEPARTMENT OF TRANSPORTATION

Filename: ...\C009_FA_CIV_Sheet Model_0174-0388.dgn

SIGNATURE/BLOCK: OFFICE OF ENGINEERING
APPROVED BY:

PROJECT TITLE: FARMINGTON AND WATERBURY MAINTENANCE FACILITIES TANK REPLACEMENT

TOWN: WATERBURY

DRAWING TITLE: MOTOR FUEL TANK DETAILS - WATERBURY

PROJECT NO. 174-388
DRAWING NO. C-009
SHEET NO. 05.09

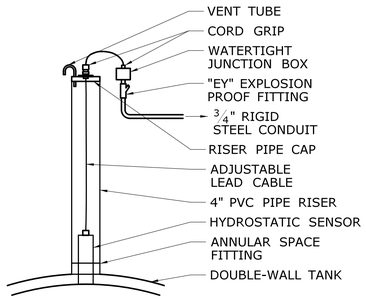

HYDROSTATIC SENSOR DETAIL

NOT TO SCALE

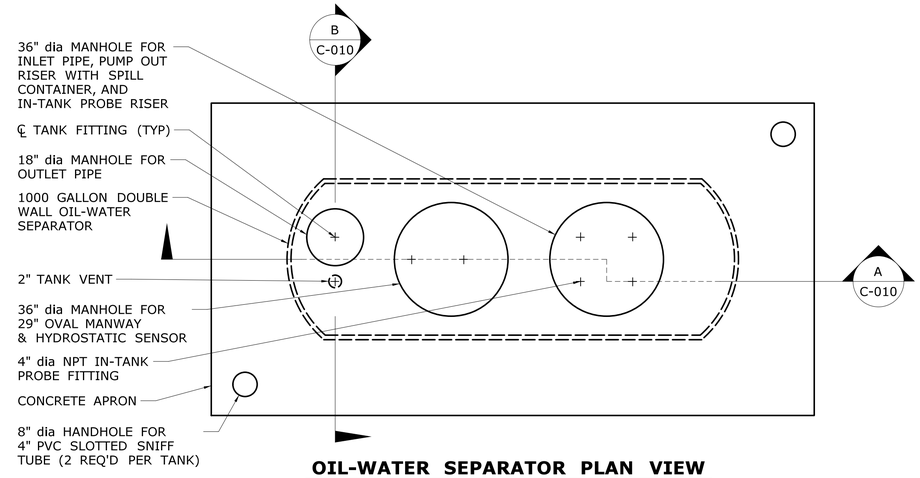

OIL-WATER SEPARATOR PLAN VIEW

SCALE: 1/2" = 1'-0"

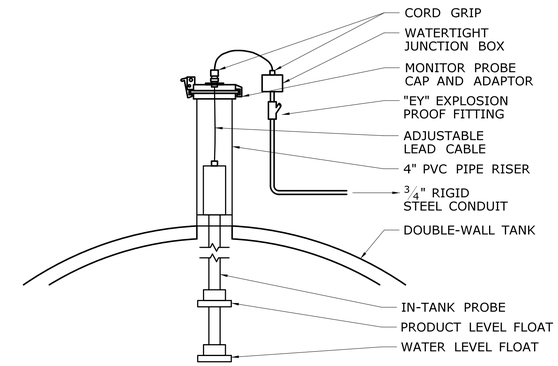

IN-TANK PROBE DETAIL

NOT TO SCALE

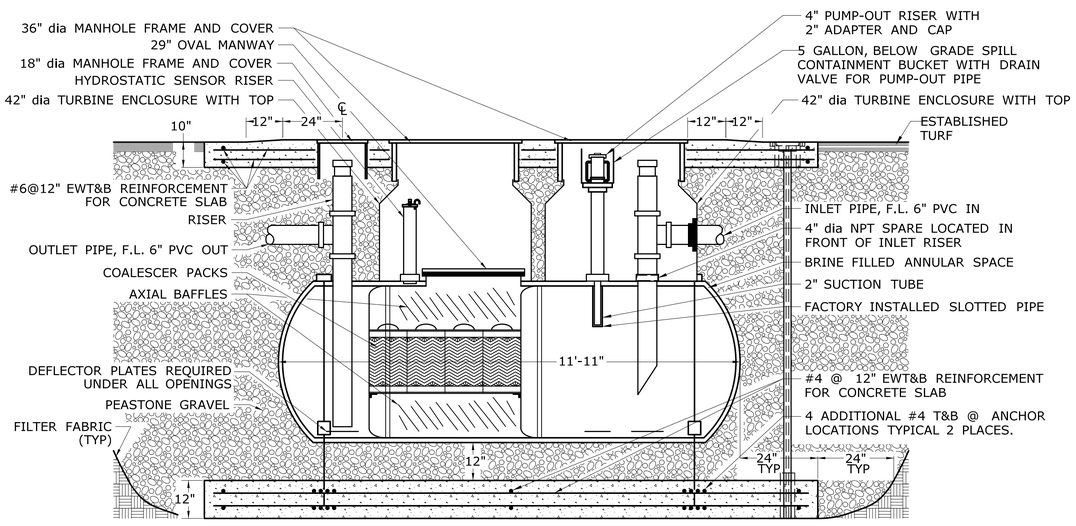

SECTION A C-010

NOT TO SCALE

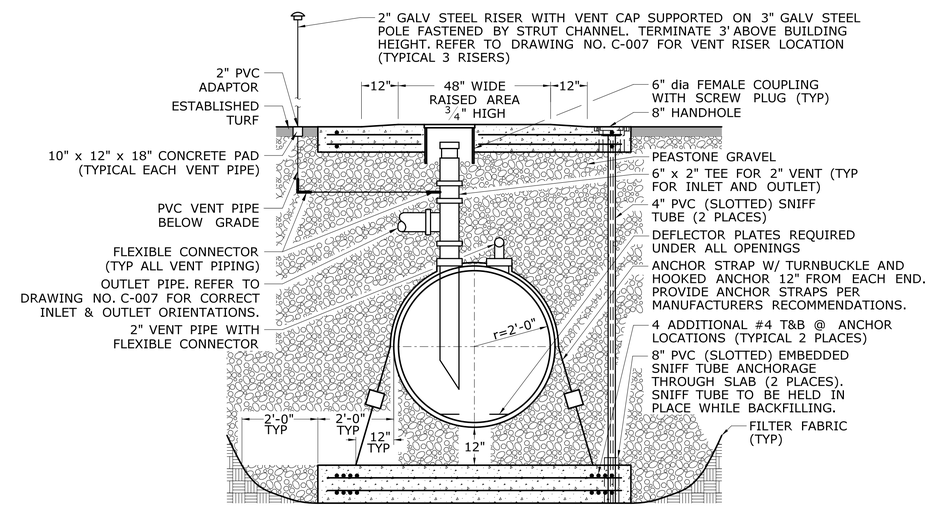

SECTION B C-010

NOT TO SCALE

NOTES:

1. THE DESIGNED TANK DIMENSIONS ARE BASED ON CONTAINMENT SOLUTIONS. ACTUAL PAD DIMENSIONS SHALL BE SIZED BASED ON THE APPROVED TANK DIMENSIONS.
2. THE MANHOLE ARRANGEMENT IS BASED ON CONTAINMENT SOLUTIONS TANKS. ACTUAL MANHOLE ARRANGEMENT SHALL BE REDESIGNED AS NECESSARY BASED ON THE APPROVED TANK MANUFACTURER.
3. ALL CONDUITS SHALL BE PROVIDED WITH EXPLOSIONPROOF FITTINGS AND SEALED AS REQUIRED IN ACCORDANCE WITH NFPA 70.
4. ALLOW SLACK AT TANK IN ALL PIPING FOR SETTLING OF TANK.

1000 GALLON DOUBLE WALL OIL-WATER SEPARATOR DETAIL

NOT TO SCALE

REV.	DATE	REVISION DESCRIPTION	SHEET NO.

THE INFORMATION, INCLUDING ESTIMATED QUANTITIES OF WORK, SHOWN ON THESE SHEETS IS BASED ON LIMITED INVESTIGATIONS BY THE STATE AND IS IN NO WAY WARRANTED TO INDICATE THE CONDITIONS OF ACTUAL QUANTITIES OF WORK WHICH WILL BE REQUIRED.

Plotted Date: 8/11/2015

DESIGNER/DRAFTER: JAB

CHECKED BY: JSB

SCALE AS NOTED

STATE OF CONNECTICUT
DEPARTMENT OF TRANSPORTATION

Filename: ...\C010_FA_CIV_Sheet_0174-0388.dgn

SIGNATURE/BLOCK: OFFICE OF ENGINEERING

APPROVED BY:

PROJECT TITLE: FARMINGTON AND WATERBURY MAINTENANCE FACILITIES TANK REPLACEMENT

TOWN: WATERBURY

DRAWING TITLE: OIL-WATER SEPARATOR WATERBURY

PROJECT NO. 174-388

DRAWING NO. C-010

SHEET NO. 05.10

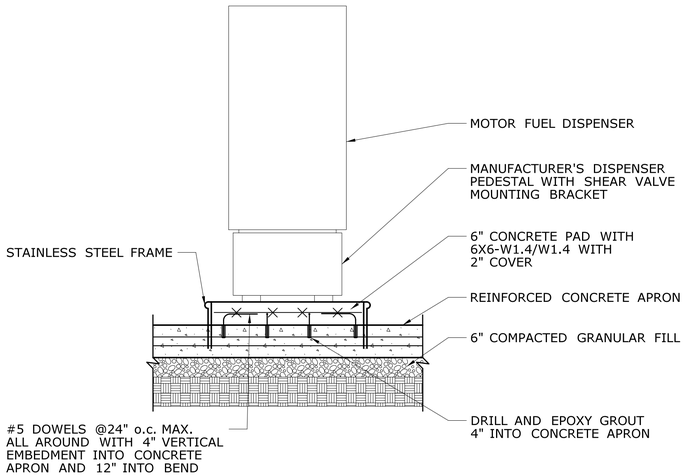

DISPENSER PAD AND APRON DETAIL C / C-003 — C / C-008

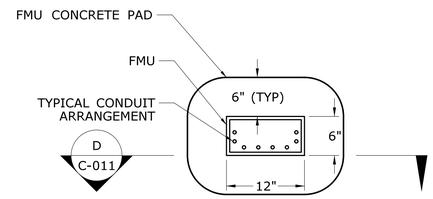

FUEL MANAGEMENT UNIT (FMU) SETTING DETAIL

NOTES:

1. FMU SHALL BE SECURED TO CONCRETE WITH STAINLESS STEEL HARDWARE. SEAL BASE OF FMU TO CONCRETE WITH SILICONE TO FORM A WATERTIGHT SEAL.

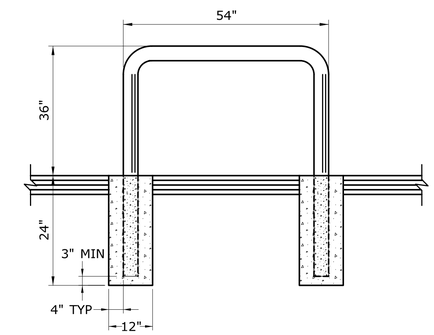

STEEL BOLLARD DETAIL

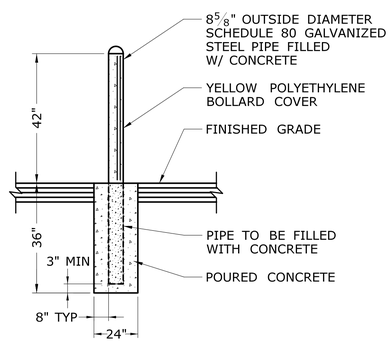

PIPE BOLLARD INSTALLATION DETAIL

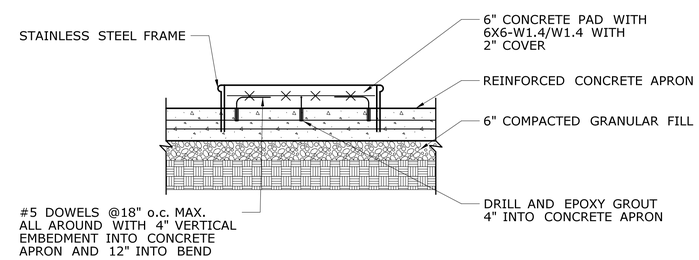

FMU PAD SECTION D / C-011

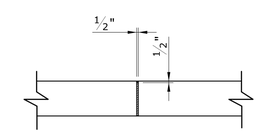

SLAB EXPANSION JOINT

REV.	DATE	REVISION DESCRIPTION	SHEET NO.

THE INFORMATION, INCLUDING ESTIMATED QUANTITIES OF WORK, SHOWN ON THESE SHEETS IS BASED ON LIMITED INVESTIGATIONS BY THE STATE AND IS IN NO WAY WARRANTED TO INDICATE THE CONDITIONS OF ACTUAL QUANTITIES OF WORK WHICH WILL BE REQUIRED.

Plotted Date: 8/11/2015

DESIGNER/DRAFTER: JAB
CHECKED BY: JSB
NOT TO SCALE

STATE OF CONNECTICUT
DEPARTMENT OF TRANSPORTATION

Filename: ...\C011_FA_CIV_Sheet_0174-0388.dgn

SIGNATURE/BLOCK: OFFICE OF ENGINEERING
APPROVED BY:

PROJECT TITLE: FARMINGTON AND WATERBURY MAINTENANCE FACILITIES TANK REPLACEMENT

TOWN: FARMINGTON AND WATERBURY

DRAWING TITLE: MOTOR FUEL ISLAND DETAILS - SHARED

PROJECT NO. 174-388
DRAWING NO. C-011
SHEET NO. 05.11