06 - MECHANICAL
INDEX OF DRAWINGS

DRAWING NUMBER	DRAWING TITLE	DRAWING NUMBER	DRAWING TITLE
M-001	MECHANICAL INDEX OF DRAWINGS		
M-002	MECHANICAL ROOM PLAN AND DETAILS (FARMINGTON)		
M-003	GENERATOR ROOM PLAN (WATERBURY)		

THE DESIGN APPEARS TO CONFORM TO APPLICABLE CRITERIA. APPROVAL IS NOT TO BE CONSTRUED TO MEAN THAT ALL ASPECTS OF THE DESIGN HAVE BEEN PERSONALLY CHECKED BY THE UNDERSIGNED.

Gregory Dorosh, P.E.
2015.08.12
07:49:16-04'00'

TRANSPORTATION PRINCIPAL ENGINEER

REV.	DATE	REVISION DESCRIPTION	SHEET NO.

THE INFORMATION, INCLUDING ESTIMATED QUANTITIES OF WORK, SHOWN ON THESE SHEETS IS BASED ON LIMITED INVESTIGATIONS BY THE STATE AND IS IN NO WAY WARRANTED TO INDICATE THE CONDITIONS OF ACTUAL QUANTITIES OF WORK WHICH WILL BE REQUIRED.

Plotted Date: 8/7/2015

DESIGNER/DRAFTER: JAB
CHECKED BY: JSB
NOT TO SCALE

STATE OF CONNECTICUT
DEPARTMENT OF TRANSPORTATION

Filename: ...\M001_FA_MEC_Sheet Model_0174-0388.dgn

SIGNATURE/ BLOCK:
OFFICE OF ENGINEERING
APPROVED BY:

PROJECT TITLE:
FARMINGTON AND WATERBURY MAINTENANCE FACILITIES TANK REPLACEMENT

TOWN: FARMINGTON AND WATERBURY

DRAWING TITLE: MECHANICAL INDEX OF DRAWINGS

PROJECT NO. 174-388
DRAWING NO. M-001
SHEET NO. 06.01

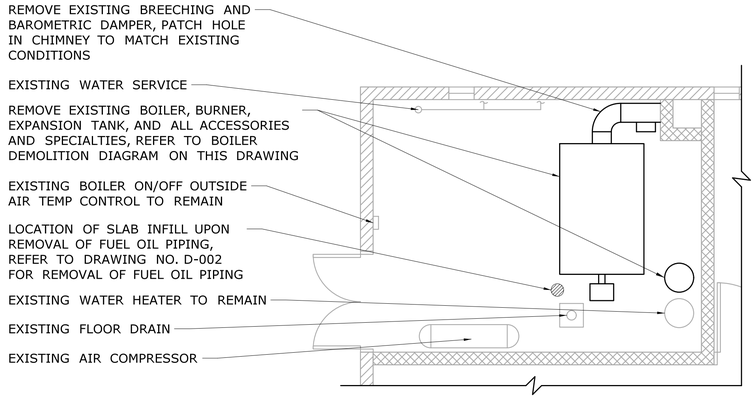

MECHANICAL ROOM DEMOLITION PLAN

SCALE: 1/4" = 1'-0"

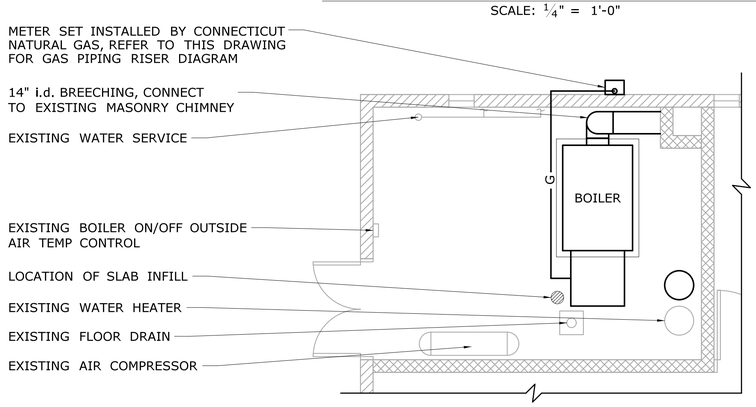

MECHANICAL ROOM FLOOR PLAN

SCALE: 1/4" = 1'-0"

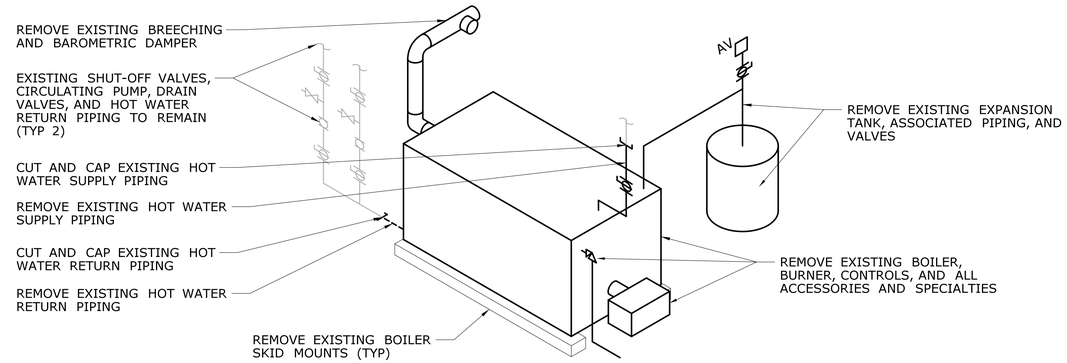

EXISTING BOILER DEMOLITION DIAGRAM

NOT TO SCALE

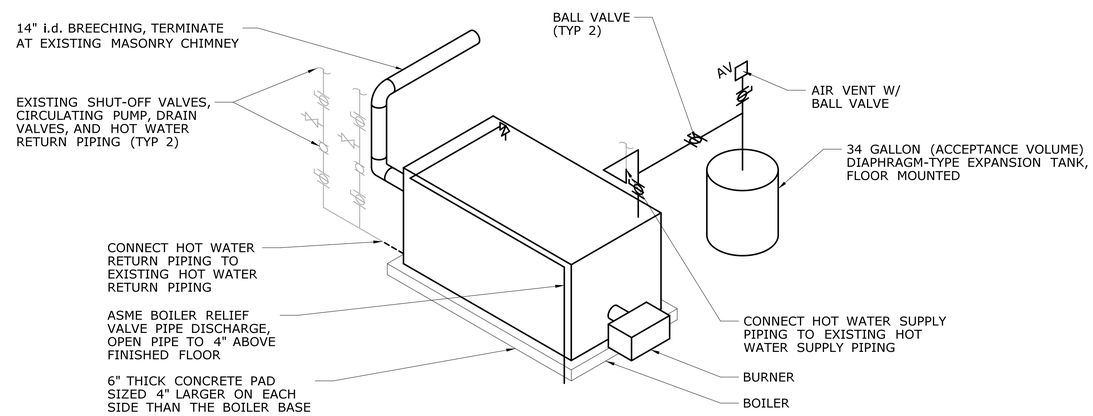

BOILER INSTALLATION DIAGRAM

NOT TO SCALE

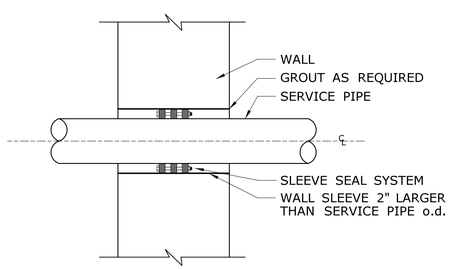

EXTERIOR WALL SLEEVE DETAIL

NOT TO SCALE

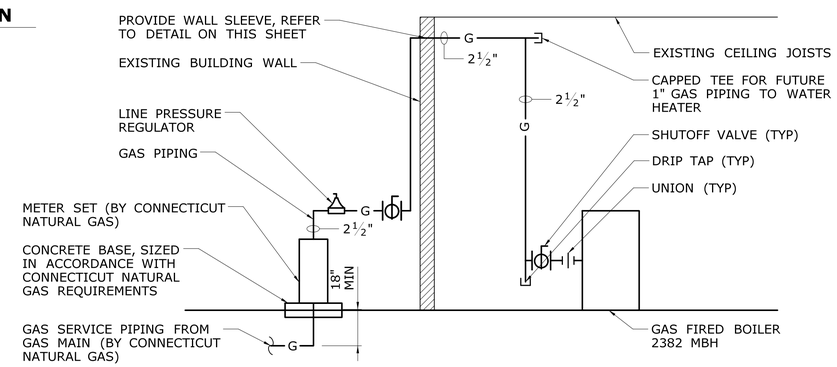

NATURAL GAS PIPING RISER DIAGRAM

NOT TO SCALE

NOTES:

1. THE INSTALLER SHALL NOTIFY THE ENGINEER OF ANY DISCREPANCIES BETWEEN FIELD CONDITIONS AND THE CONTRACT BEFORE PROCEEDING WITH THAT PORTION OF THE WORK. FAILURE TO NOTIFY THE ENGINEER WILL NOT RELIEVE THE INSTALLER OF RESPONSIBILITY. THE INSTALLER SHALL CORRECT ALL WORK ARISING FROM SUCH FAILURE TO COORDINATE DISCREPENCIES TO THE SATISFACTION OF THE ENGINEER WITHOUT ADDITIONAL COST TO THE OWNER.

REV.	DATE	REVISION DESCRIPTION	SHEET NO.

THE INFORMATION, INCLUDING ESTIMATED QUANTITIES OF WORK, SHOWN ON THESE SHEETS IS BASED ON LIMITED INVESTIGATIONS BY THE STATE AND IS IN NO WAY WARRANTED TO INDICATE THE CONDITIONS OF ACTUAL QUANTITIES OF WORK WHICH WILL BE REQUIRED.

Plotted Date: 8/7/2015

DESIGNER/DRAFTER: JAB
CHECKED BY: JSB
SCALE AS NOTED

STATE OF CONNECTICUT
DEPARTMENT OF TRANSPORTATION

Filename: ...\M002_FA_MEC_Sheet Model_0174-0388.dgn

SIGNATURE/BLOCK: OFFICE OF ENGINEERING
APPROVED BY:

PROJECT TITLE: FARMINGTON AND WATERBURY MAINTENANCE FACILITIES TANK REPLACEMENT

TOWN: FARMINGTON

DRAWING TITLE: MECHANICAL ROOM PLAN AND DETAILS

PROJECT NO. 174-388
DRAWING NO. M-002
SHEET NO. 06.02

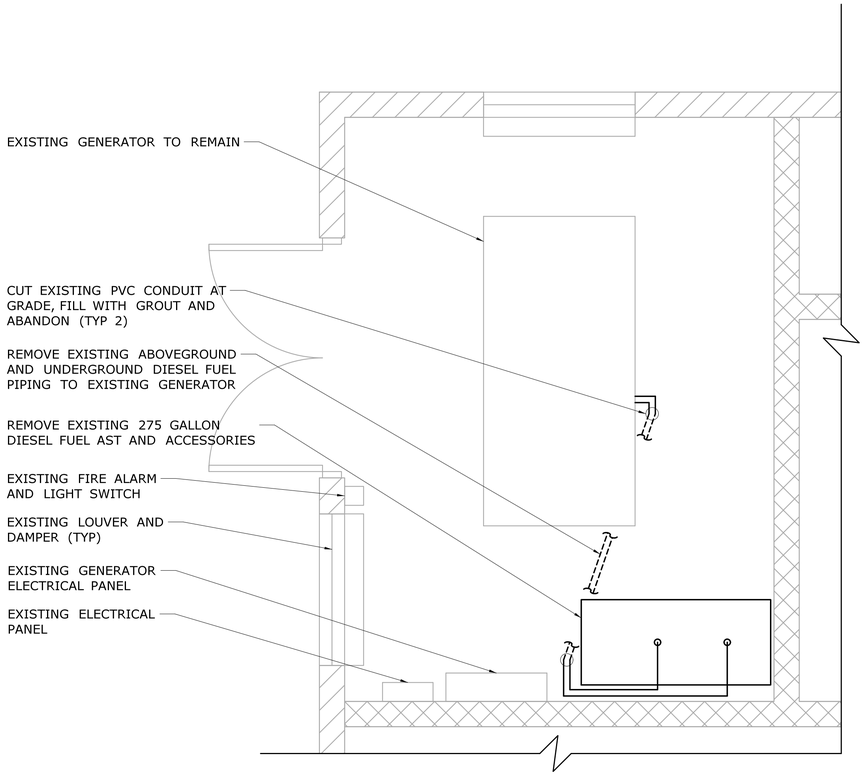

GENERATOR ROOM DEMOLITION PLAN

SCALE: 1/2" = 1'-0"

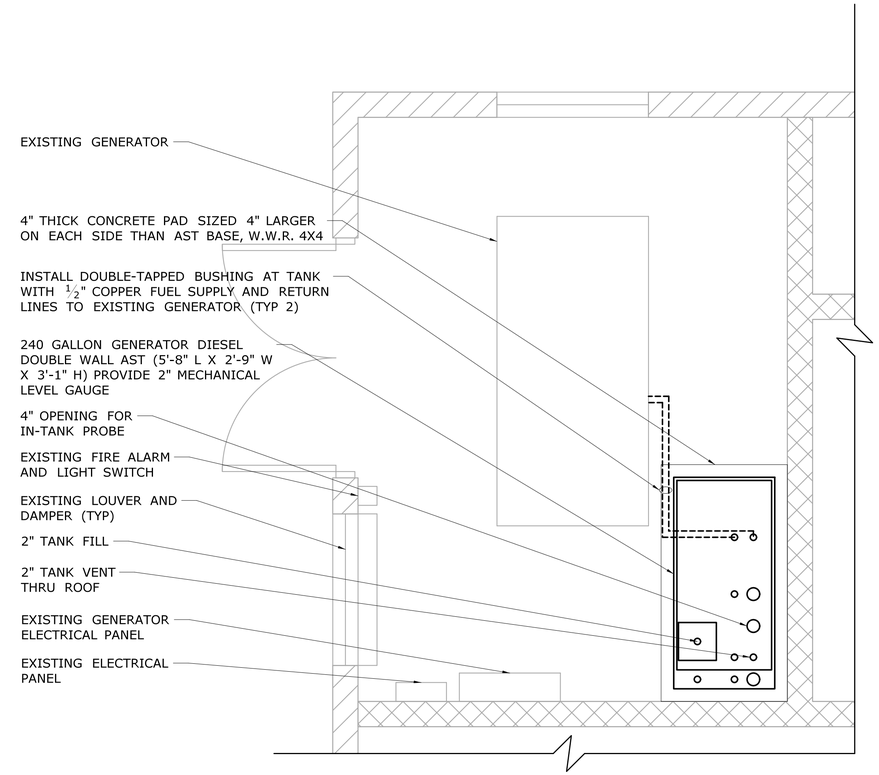

GENERATOR ROOM FLOOR PLAN

SCALE: 1/2" = 1'-0"

REV.	DATE	REVISION DESCRIPTION	SHEET NO.

THE INFORMATION, INCLUDING ESTIMATED QUANTITIES OF WORK, SHOWN ON THESE SHEETS IS BASED ON LIMITED INVESTIGATIONS BY THE STATE AND IS IN NO WAY WARRANTED TO INDICATE THE CONDITIONS OF ACTUAL QUANTITIES OF WORK WHICH WILL BE REQUIRED.

Plotted Date: 8/7/2015

DESIGNER/DRAFTER: JAB

CHECKED BY: JSB

SCALE AS NOTED

STATE OF CONNECTICUT
DEPARTMENT OF TRANSPORTATION

Filename: ...\M003_FA_MEC_Sheet Model_0174-0388.dgn

SIGNATURE/ BLOCK:

OFFICE OF ENGINEERING

APPROVED BY:

PROJECT TITLE:

FARMINGTON AND WATERBURY MAINTENANCE FACILITIES TANK REPLACEMENT

TOWN: **WATERBURY**

DRAWING TITLE: **GENERATOR ROOM PLAN**

PROJECT NO. **174-388**

DRAWING NO. **M-003**

SHEET NO. **06.03**