07-ELECTRICAL
INDEX OF DRAWINGS

DRAWING NUMBER	DRAWING TITLE	DRAWING NUMBER	DRAWING TITLE
ELE1	FARMINGTON AND WATERBURY INDEX OF DRAWINGS		
DMO1	FARMINGTON REMOVAL PLAN		
DMO2	WATERBURY REMOVAL PLAN		
DMO3	FARMINGTON INTERIOR REMOVAL & NEW WORK PLAN		
DMO4	WATERBURY INTERIOR REMOVAL & NEW WORK PLAN		
ELE2	FARMINGTON ELECTRIC SITE PLAN		
ELE3	WATERBURY ELECTRIC SITE PLAN		
ELE4	FARMINGTON MOTOR FUEL ISLAND CONDUIT PLAN		
ELE5	WATERBURY MOTOR FUEL ISLAND CONDUIT PLAN		
ELE6	FARMINGTON PANEL SCHEDULE & ONE-LINE DIAGRAMS		
ELE7	WATERBURY PANEL SCHEDULE & ONE-LINE DIAGRAMS		
ELE8	FARMINGTON AND WATERBURY TYPICAL ONE-LINE		
	DIAGRAMS		
ELE9	WATERBURY TEMPORARY FUEL DISPENSER ONE-LINE		
	DIAGRAM		
ELE10	FARMINGTON AND WATERBURY FUEL DISPENSER		
	ONE-LINE DIAGRAMS		
DET1	FARMINGTON AND WATERBURY ELECTRICAL DETAILS		

THE DESIGN APPEARS TO CONFORM TO APPLICABLE CRITERIA. APPROVAL IS NOT TO BE CONSTRUED TO MEAN THAT ALL ASPECTS OF THE DESIGN HAVE BEEN PERSONALLY CHECKED BY THE UNDERSIGNED.

Brian P. McKenna
2015.09.19 07:15:31-04'00'

TRANSPORTATION PRINCIPAL ENGINEER

REV.	DATE	REVISION DESCRIPTION	SHEET NO.

THE INFORMATION, INCLUDING ESTIMATED QUANTITIES OF WORK, SHOWN ON THESE SHEETS IS BASED ON LIMITED INVESTIGATIONS BY THE STATE AND IS IN NO WAY WARRANTED TO INDICATE THE CONDITIONS OF ACTUAL QUANTITIES OF WORK WHICH WILL BE REQUIRED.

Plotted Date: 8/10/2015

DESIGNER/DRAFTER: **WAF**

CHECKED BY: **MS**

NOT TO SCALE

STATE OF CONNECTICUT
DEPARTMENT OF TRANSPORTATION

Filename: FD_MSH_ELE_0174-0388_ELE1.dgn

SIGNATURE/ BLOCK:

STATE OF CONNECTICUT · BRIAN P. MCKENNA · No. 21640 · LICENSED · PROFESSIONAL ENGINEER

PROJECT TITLE:

FARMINGTON AND WATERBURY MAINTENANCE FACILITIES TANK REPLACEMENT

TOWN: **FARMINGTON AND WATERBURY**

DRAWING TITLE: **INDEX OF DRAWINGS**

PROJECT NO. **174-388**

DRAWING NO. **ELE1**

SHEET NO. **07.01**

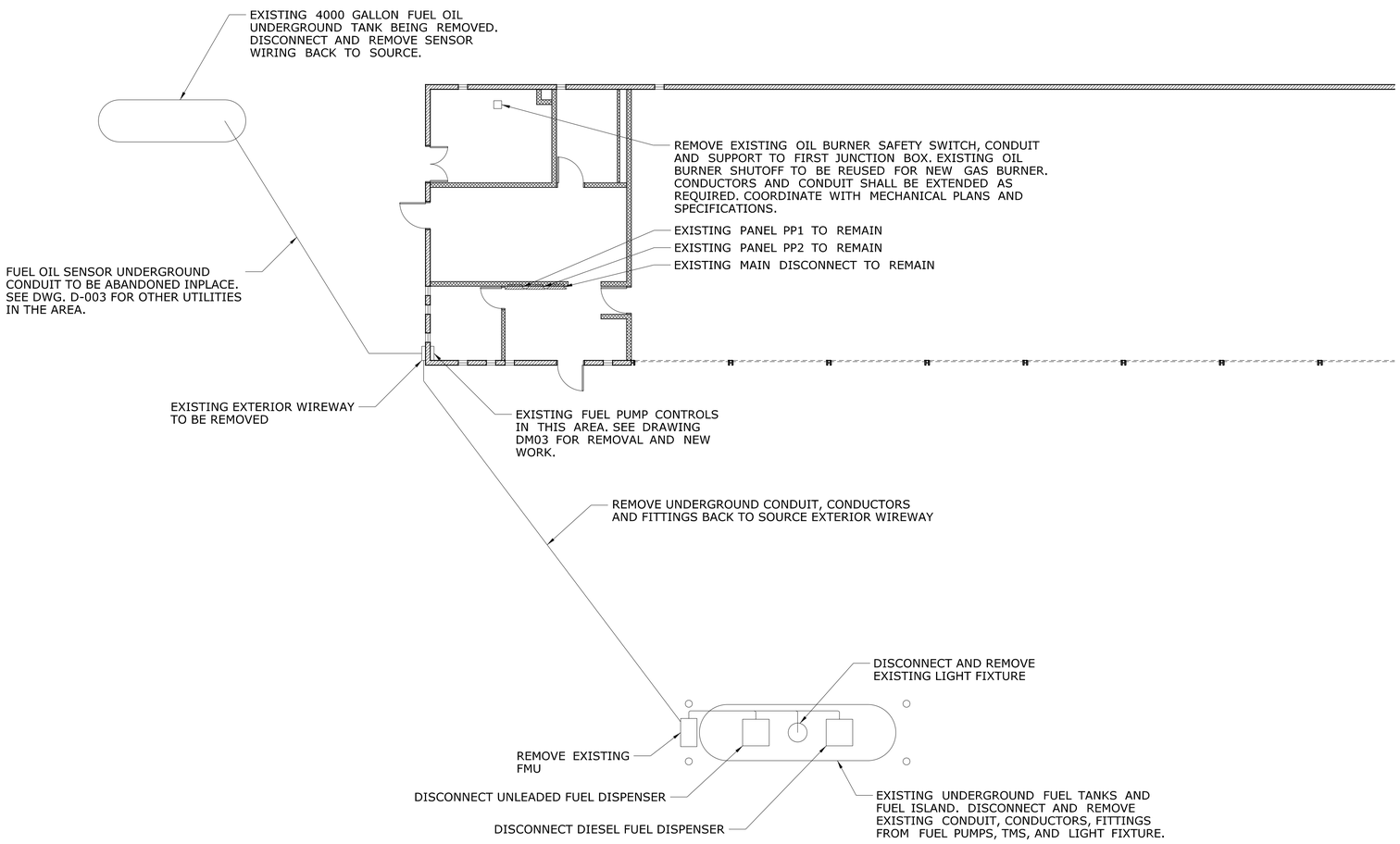

GENERAL NOTES:

1. ALL 20-AMP BRANCH CIRCUITS EXCEEDING 100 FEET IN LENGTH SHALL BE #10 AWG. WIRING SIZE SHALL BE ADJUSTED AS NECESSARY TO REFLECT VOLTAGE DROP IN ACCORDANCE WITH THE NEC CONDUCTORS SIZING REQUIREMENTS.
2. ALL POWER CONDUCTORS INSTALLED IN THE BUILDING AT FLOOR LEVEL UP TO AND INCLUDING THE UNIFORMED HEIGHT OF 10 FEET ABOVE FINISHED FLOOR SHALL BE INSTALLED IN RIGID GALVANIZED STEEL CONDUIT (RGSC). CONDUCTORS EXTENDING BEYOND THE 10 FOOT HEIGHT MAY BE ELECTRICAL METALLIC TUBING (EMT).
3. INSTALL ONE (1) EXPLOSION PROOF FITTING FOR EACH CONDUIT ROUTED FROM THE FUEL MANAGEMENT UNIT (FMU) TO THE BUILDING. INSTALL ONE (1) EXPLOSION PROOF FITTING FOR EACH CONDUIT PENETRATING THE BUILDING.
4. THE CONTRACTOR SHALL INSTALL FIRESTOP AROUND ALL ELECTRICAL CONDUIT PENETRATIONS THROUGH FIRE RATED WALLS.
5. THE CONTRACTOR SHALL PROVIDE SUPPORT OF SERVICE MOUNTED POWER AND COMMUNICATION RACEWAYS AND CABLES PER NEC ARTICLES 300.11 AND 300.19 APPROVED METHODS.
6. THE CONTACTOR SHALL COORDINATE ANY INTERRUPTIONS TO THE SERVICE WITH THE ENGINEER.
7. SHIELDED CABLE 4-CONDUCTOR, #24 AWG. COMMUNICATIONS CABLE SHALL BE RATED FOR OUTDOOR/UNDERGROUND INSTALLATION.
8. ALL CONDUCTORS SHALL BE STRANDED COPPER TYPE THWN-2.
9. MOUNT CONTACTOR ENCLOSURE AND DISCONNECT SWITCH 48" ABOVE FINISHED FLOOR MEASURED TO THE TOP OF THE ENCLOSURE.
10. PROVIDE EMERGENCY STOP SWITCH MUSHROOM-TYPE PUSH BUTTON STATION, ILLUMINATED WITH POLYCARBONATE GUARD. EMERGENCY STOP SWITCH TO TRIP THE CONTACTOR. PROVIDE NAMEPLATE: "FUEL ISLAND EMERGENCY POWER OFF". IN ACCORDANCE WITH MANUFACTURER'S RECOMMENDATIONS, APPROXIMATELY 42" ABOVE GRADE. SHUNT TRIP MUSHROOM HEAD PUSH BUTTON SHALL BE SIEMENS CATALOG NO. 52PR5GRAB OR APPROVED EQUAL. SEE DRAWING ELE10.
11. INSTALL 10-FEET UNISTRUT MAST AND ATTACH MAST FIRMLY TO CONCRETE BARRIER. MOUNT 3/4" RGSC TO UNISTRUT MAST AND INSTALL TWIN FLOODLIGHT WITH PHOTOCELL. FLOOD LIGHT SHALL BE ORIENTED IN THE DIRECTION OF THE DISPENSER AND FMU.

DEMOLITION NOTES:

1. THE CONTRACTOR SHALL SALVAGE ITEMS BELONGING TO CT-DOT INCLUDING BUT NOT LIMITED TO EMERGENCY PUSH BUTTON, CONTACTOR AND ENCLOSURE, DISCONNECT SWITCH, CONTROL RELAY AND ENCLOSURE, AND GROUND ROD.
2. THE CONTRACTOR SHALL RESTORE ALL PENETRATIONS TO THE BUILDING MADE DURING TEMPORARY WORK WITH SUITABLE MASONRY REPAIR MATERIALS. FIRE RATING OF WALLS SHALL BE MAINTAINED AFTER REPAIR. COLOR OF REPAIR TO MATCH EXISTING BUILDING COLOR SCHEME.
3. EXISTING CALL-PROCESSOR TO BE REMOVED AND SALVAGED BY THE CT-DOT INFORMATION SYSTEMS DEPARTMENT.

REV.	DATE	REVISION DESCRIPTION	SHEET NO.

THE INFORMATION, INCLUDING ESTIMATED QUANTITIES OF WORK, SHOWN ON THESE SHEETS IS BASED ON LIMITED INVESTIGATIONS BY THE STATE AND IS IN NO WAY WARRANTED TO INDICATE THE CONDITIONS OF ACTUAL QUANTITIES OF WORK WHICH WILL BE REQUIRED.

Plotted Date: 8/10/2015

DESIGNER/DRAFTER: WAF
CHECKED BY: MS
NOT TO SCALE

STATE OF CONNECTICUT
DEPARTMENT OF TRANSPORTATION

Filename: $FILEA$

SIGNATURE/BLOCK:

STATE OF CONNECTICUT · BRIAN P. MORAN · No. 21640 · LICENSED · PROFESSIONAL ENGINEER

PROJECT TITLE:
FARMINGTON AND WATERBURY MAINTENANCE FACILITIES TANK REPLACEMENT

TOWN: **FARMINGTON**

DRAWING TITLE: **REMOVAL PLAN**

PROJECT NO. **174-388**
DRAWING NO. **DMO1**
SHEET NO. **07.02**

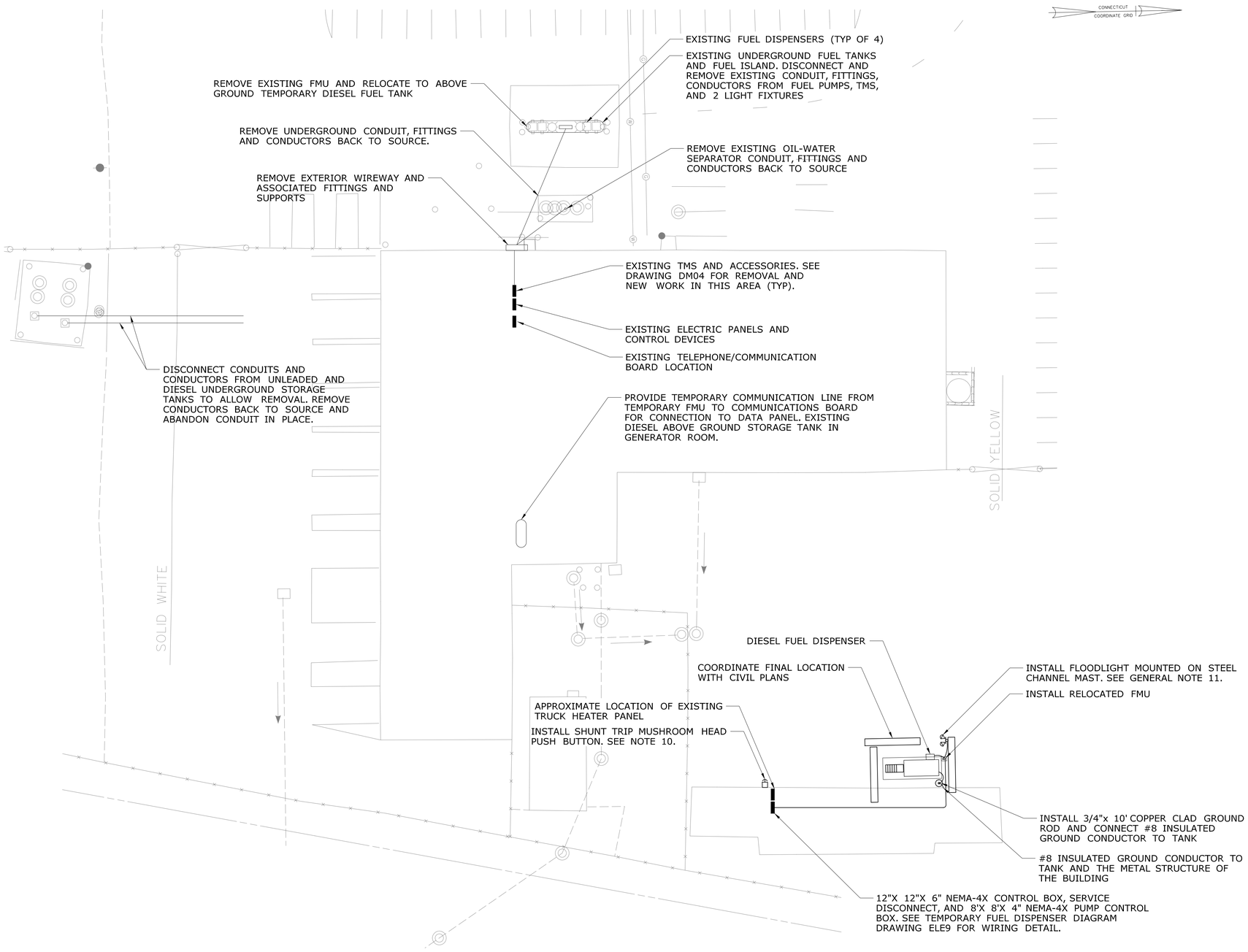

GENERAL NOTES:

1. ALL 20-AMP BRANCH CIRCUITS EXCEEDING 100 FEET IN LENGTH SHALL BE #10 AWG. WIRING SIZE SHALL BE ADJUSTED AS NECESSARY TO REFLECT VOLTAGE DROP IN ACCORDANCE WITH THE NEC CONDUCTORS SIZING REQUIREMENTS.
2. ALL POWER CONDUCTORS INSTALLED IN THE BUILDING AT FLOOR LEVEL UP TO AND INCLUDING THE UNIFORMED HEIGHT OF 10 FEET ABOVE FINISHED FLOOR SHALL BE INSTALLED IN RIGID GALVANIZED STEEL CONDUIT (RGSC). CONDUCTORS EXTENDING BEYOND THE 10 FOOT HEIGHT MAY BE ELECTRICAL METALLIC TUBING (EMT).
3. INSTALL ONE (1) EXPLOSION PROOF FITTING FOR EACH CONDUIT ROUTED FROM THE FUEL MANAGEMENT UNIT (FMU) TO THE BUILDING. INSTALL ONE (1) EXPLOSION PROOF FITTING FOR EACH CONDUIT PENETRATING THE BUILDING.
4. THE CONTRACTOR SHALL INSTALL FIRESTOP AROUND ALL ELECTRICAL CONDUIT PENETRATIONS THROUGH FIRE RATED WALLS.
5. THE CONTRACTOR SHALL PROVIDE SUPPORT OF SERVICE MOUNTED POWER AND COMMUNICATION RACEWAYS AND CABLES PER NEC ARTICLES 300.11 AND 300.19 APPROVED METHODS.
6. THE CONTACTOR SHALL COORDINATE ANY INTERRUPTIONS TO THE SERVICE WITH THE ENGINEER.
7. SHIELDED CABLE 4-CONDUCTOR, #24 AWG. COMMUNICATIONS CABLE SHALL BE RATED FOR OUTDOOR/UNDERGROUND INSTALLATION.
8. ALL CONDUCTORS SHALL BE STRANDED COPPER TYPE THWN-2.
9. MOUNT CONTACTOR ENCLOSURE AND DISCONNECT SWITCH 48" ABOVE FINISHED FLOOR MEASURED TO THE TOP OF THE ENCLOSURE.
10. PROVIDE EMERGENCY STOP SWITCH MUSHROOM-TYPE PUSH BUTTON STATION, ILLUMINATED WITH POLYCARBONATE GUARD. EMERGENCY STOP SWITCH TO TRIP THE CONTACTOR. PROVIDE NAMEPLATE: "FUEL ISLAND EMERGENCY POWER OFF". IN ACCORDANCE WITH MANUFACTURER'S RECOMMENDATIONS, APPROXIMATELY 42" ABOVE GRADE. SHUNT TRIP MUSHROOM HEAD PUSH BUTTON SHALL BE SIEMENS CATALOG NO. 52PR8GRAB OR APPROVED EQUAL. SEE DRAWING E-005.
11. INSTALL 10-FEET UNISTRUT MAST AND ATTACH MAST FIRMLY TO CONCRETE BARRIER. MOUNT 3/4" RGSC TO UNISTRUT MAST AND INSTALL TWIN FLOODLIGHT WITH PHOTOCELL. FLOOD LIGHT SHALL BE ORIENTED IN THE DIRECTION OF THE DISPENSER AND FMU.

DEMOLITION NOTES:

1. THE CONTRACTOR SHALL REMOVE ALL TEMPORARY CONDUIT, CONDUCTORS, SUPPORTS, AND FITTINGS INSTALLED FOR TEMPORARY DIESEL FUEL TANK AND RELATED EQUIPMENT. EXTERIOR TEMPORARY CONDUIT, CONDUCTORS, SUPPORTS, AND FITTINGS ABOVE GRADE SHALL BE DISPOSED OF PROPERLY. INTERIOR AND BELOW GRADE CONDUIT, SUPPORTS, AND FITTINGS SHALL BE ABANDONED IN PLACE.
2. THE CONTRACTOR SHALL SALVAGE ITEMS BELONGING TO CT-DOT INCLUDING BUT NOT LIMITED TO EMERGENCY PUSH BUTTON, CONTACTOR AND ENCLOSURE, DISCONNECT SWITCH, CONTROL RELAY AND ENCLOSURE, AND GROUND ROD.
3. THE CONTRACTOR SHALL RESTORE ALL PENETRATIONS TO THE BUILDING MADE DURING TEMPORARY WORK WITH SUITABLE MASONRY REPAIR MATERIALS. FIRE RATING OF WALLS SHALL BE MAINTAINED AFTER REPAIR. COLOR OF REPAIR TO MATCH EXISTING BUILDING COLOR SCHEME.
4. EXISTING CALL-PROCESSOR TO BE REMOVED AND SALVAGED BY THE CT-DOT INFORMATION SYSTEMS DEPARTMENT.
5. CIRCUIT BREAKERS INSTALLED FOR TEMPORARY WORK SHALL REMAIN AS SPARES. MODIFY PANELBOARD DIRECTORY TO UPDATE PANELBOARD SCHEDULE.

REV.	DATE	REVISION DESCRIPTION	SHEET NO.

THE INFORMATION, INCLUDING ESTIMATED QUANTITIES OF WORK, SHOWN ON THESE SHEETS IS BASED ON LIMITED INVESTIGATIONS BY THE STATE AND IS IN NO WAY WARRANTED TO INDICATE THE CONDITIONS OF ACTUAL QUANTITIES OF WORK WHICH WILL BE REQUIRED.

Plotted Date: 8/10/2015

DESIGNER/DRAFTER: **WAF**

CHECKED BY: **MS**

SCALE IN FEET 0 20 40

SCALE 1"=20'

STATE OF CONNECTICUT
DEPARTMENT OF TRANSPORTATION

Filename: $FILEA$

SIGNATURE/ BLOCK:

STATE OF CONNECTICUT · BRIAN P. MUNI, P.E. · No. 21640 · LICENSED · PROFESSIONAL ENGINEER

PROJECT TITLE:

FARMINGTON AND WATERBURY MAINTENANCE FACILITIES TANK REPLACEMENT

TOWN: **WATERBURY**

DRAWING TITLE: **REMOVAL PLAN**

PROJECT NO. **174-388**

DRAWING NO. **DMO2**

SHEET NO. **07.03**

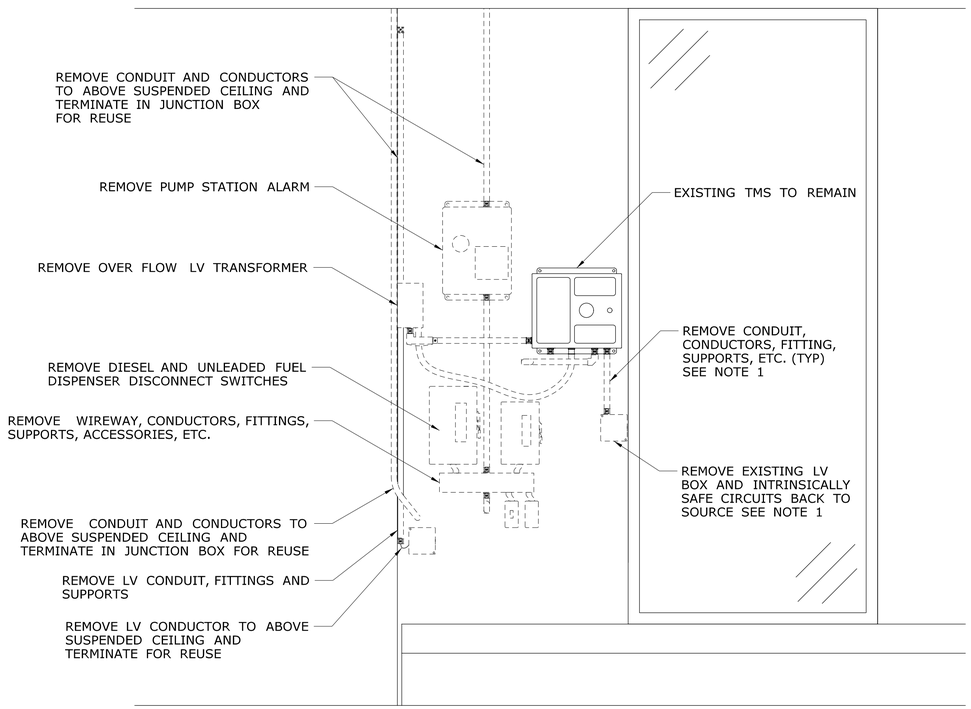

1 / DMO3 **WEST WALL OFFICE - REMOVALS**

NOT TO SCALE

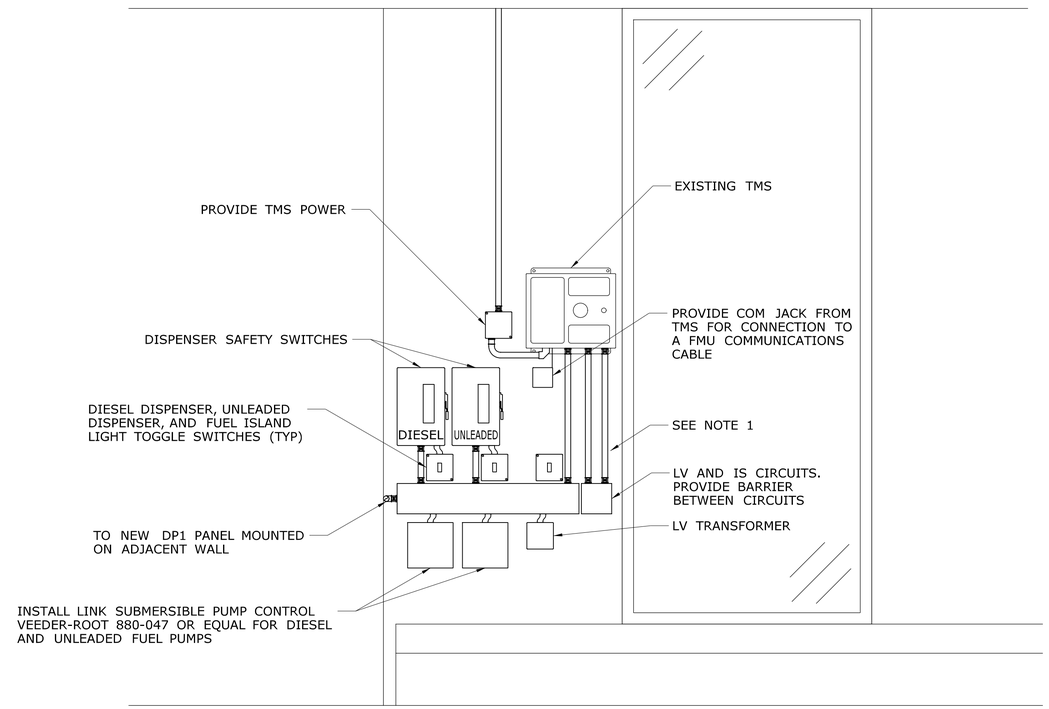

2 / DMO3 **WEST WALL OFFICE - NEW WORK**

NOT TO SCALE

NOTE:

1. EXISTING OIL-WATER SEPERATOR TANK, CONDUIT AND PROBE WIRING TO REMAIN IN SERVICE. MAINTAIN EXISTING CONDUIT, JUNCTION BOX AND FITTINGS OR PROVIDE NEW TO KEEP IN OPERATION OIL-WATER PROBE CIRCUIT TO THE EXISTING TMS. PROVIDE CONDUIT AND WIRING TO EXTEND EXISTING OIL-WATER PROBE CIRCUIT TO NEW JUNCTION BOX OR WIREWAY.

REV.	DATE	REVISION DESCRIPTION	SHEET NO.

THE INFORMATION, INCLUDING ESTIMATED QUANTITIES OF WORK, SHOWN ON THESE SHEETS IS BASED ON LIMITED INVESTIGATIONS BY THE STATE AND IS IN NO WAY WARRANTED TO INDICATE THE CONDITIONS OF ACTUAL QUANTITIES OF WORK WHICH WILL BE REQUIRED.

Plotted Date: 8/10/2015

DESIGNER/DRAFTER: **WAF**

CHECKED BY: **MS**

SCALE AS NOTED

STATE OF CONNECTICUT
DEPARTMENT OF TRANSPORTATION

Filename: $FILEA$

SIGNATURE/ BLOCK:

STATE OF CONNECTICUT · BRIAN P. MCKENNA · No. 21640 · LICENSED PROFESSIONAL ENGINEER

PROJECT TITLE:

FARMINGTON AND WATERBURY MAINTENANCE FACILITIES TANK REPLACEMENT

TOWN: **FARMINGTON**

DRAWING TITLE: **INTERIOR REMOVAL & NEW WORK PLAN**

PROJECT NO. **174-388**

DRAWING NO. **DMO3**

SHEET NO. **07.04**

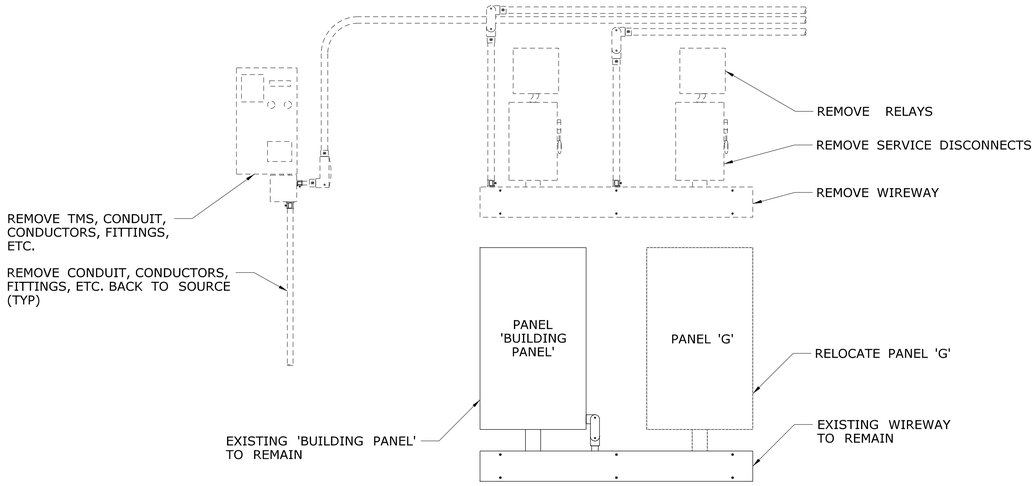

1 / DMO4 **SOUTH WALL ELECTRIC CLOSET - REMOVALS**

NOT TO SCALE

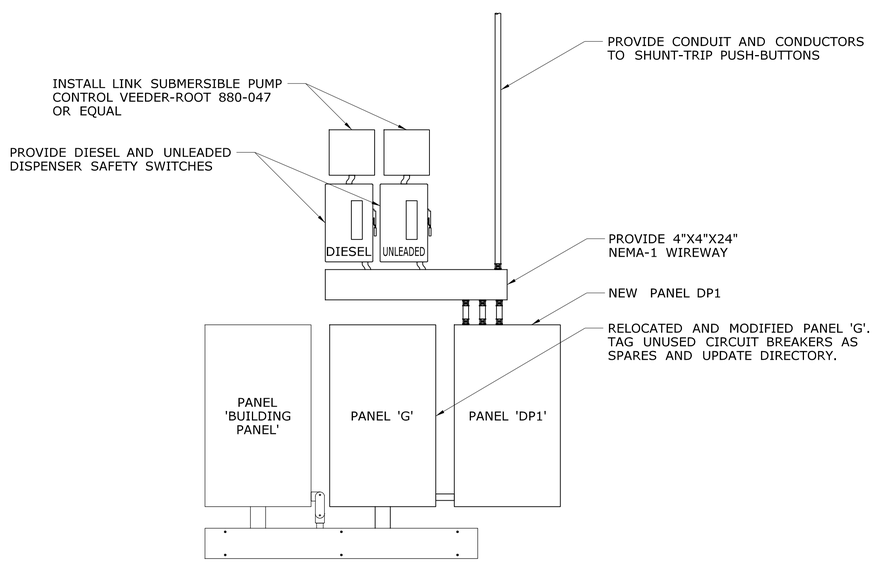

2 / DMO4 **SOUTH WALL ELECTRIC CLOSET - NEW WORK**

NOT TO SCALE

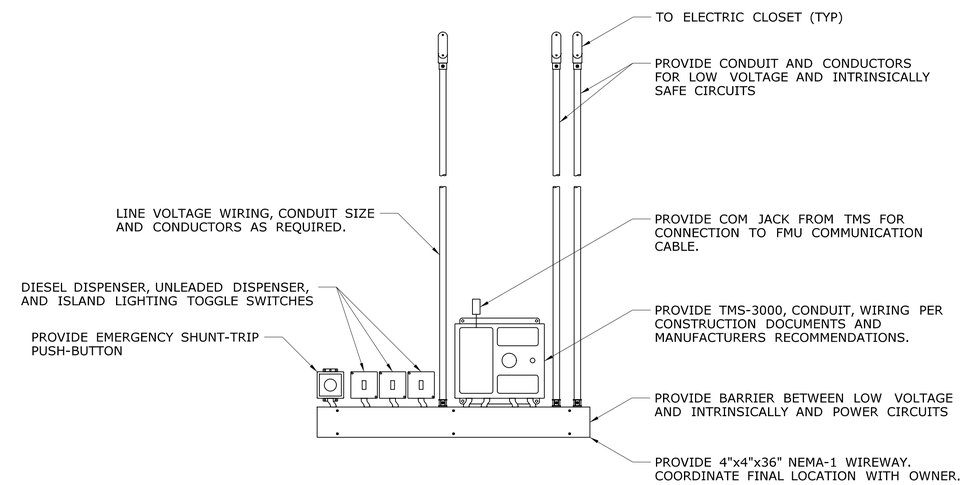

3 / DMO4 **SOUTH WALL OFFICE - NEW WORK**

NOT TO SCALE

REV.	DATE	REVISION DESCRIPTION	SHEET NO.

THE INFORMATION, INCLUDING ESTIMATED QUANTITIES OF WORK, SHOWN ON THESE SHEETS IS BASED ON LIMITED INVESTIGATIONS BY THE STATE AND IS IN NO WAY WARRANTED TO INDICATE THE CONDITIONS OF ACTUAL QUANTITIES OF WORK WHICH WILL BE REQUIRED.

Plotted Date: 8/10/2015

DESIGNER/DRAFTER: **WAF**

CHECKED BY: **MS**

SCALE AS NOTED

STATE OF CONNECTICUT
DEPARTMENT OF TRANSPORTATION

Filename: $FILEA$

SIGNATURE/ BLOCK:

STATE OF CONNECTICUT · BRUCE P. MCKEGNEY · No. 21440 · LICENSED PROFESSIONAL ENGINEER

PROJECT TITLE:

FARMINGTON AND WATERBURY MAINTENANCE FACILITIES TANK REPLACEMENT

TOWN: **WATERBURY**

DRAWING TITLE: **INTERIOR REMOVAL & NEW WORK PLAN**

PROJECT NO. **174-388**

DRAWING NO. **DMO4**

SHEET NO. **07.05**

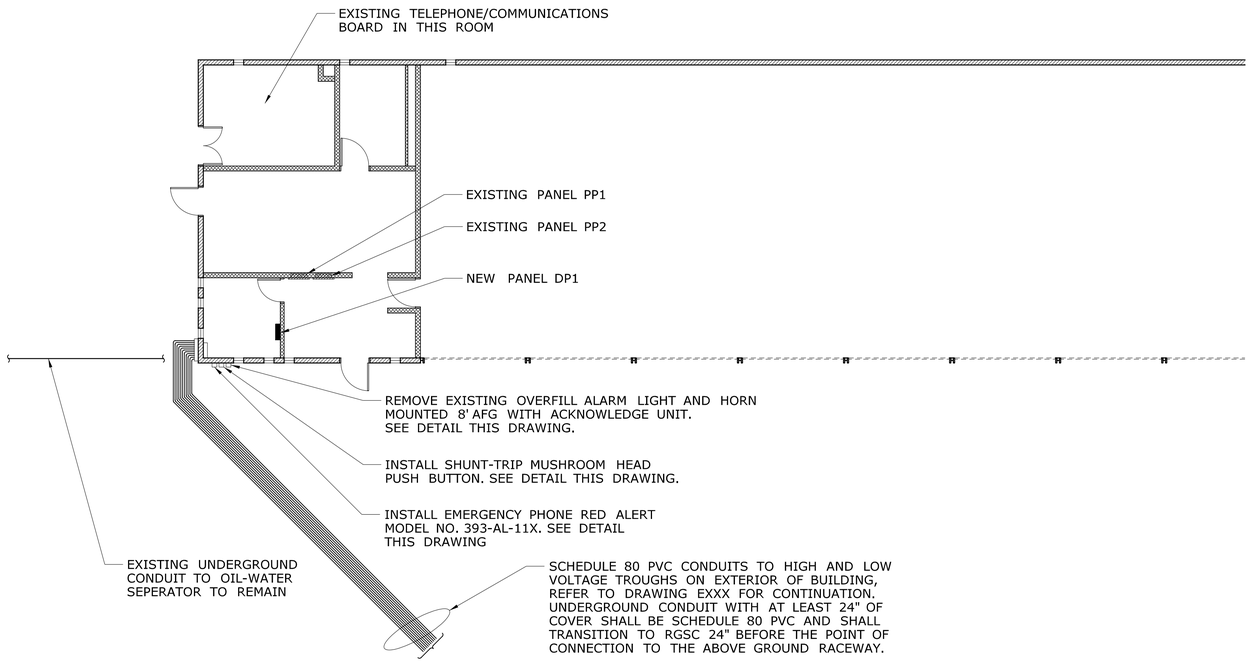

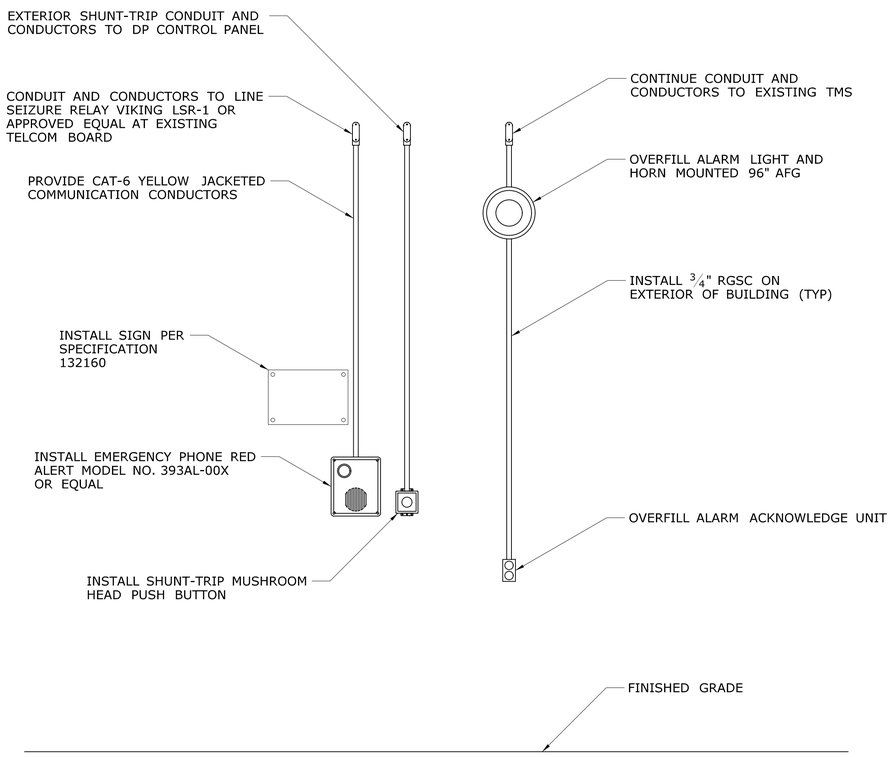

1 / ELE2 **OFFICE EXTERIOR SOUTH WALL - PROPOSED WORK**

NOT TO SCALE

REV.	DATE	REVISION DESCRIPTION	SHEET NO.

THE INFORMATION, INCLUDING ESTIMATED QUANTITIES OF WORK, SHOWN ON THESE SHEETS IS BASED ON LIMITED INVESTIGATIONS BY THE STATE AND IS IN NO WAY WARRANTED TO INDICATE THE CONDITIONS OF ACTUAL QUANTITIES OF WORK WHICH WILL BE REQUIRED.

Plotted Date: 8/10/2015

DESIGNER/DRAFTER: **WAF**

CHECKED BY: **MS**

SCALE AS NOTED

STATE OF CONNECTICUT
DEPARTMENT OF TRANSPORTATION

Filename: $FILEA$

SIGNATURE/ BLOCK:

STATE OF CONNECTICUT · BRIAN P. MULKERN · No. 21640 · LICENSED · PROFESSIONAL ENGINEER

PROJECT TITLE:

FARMINGTON AND WATERBURY MAINTENANCE FACILITIES TANK REPLACEMENT

TOWN: **FARMINGTON**

DRAWING TITLE: **ELECTRIC SITE PLAN**

PROJECT NO. **174-388**

DRAWING NO. **ELE2**

SHEET NO. **07.06**

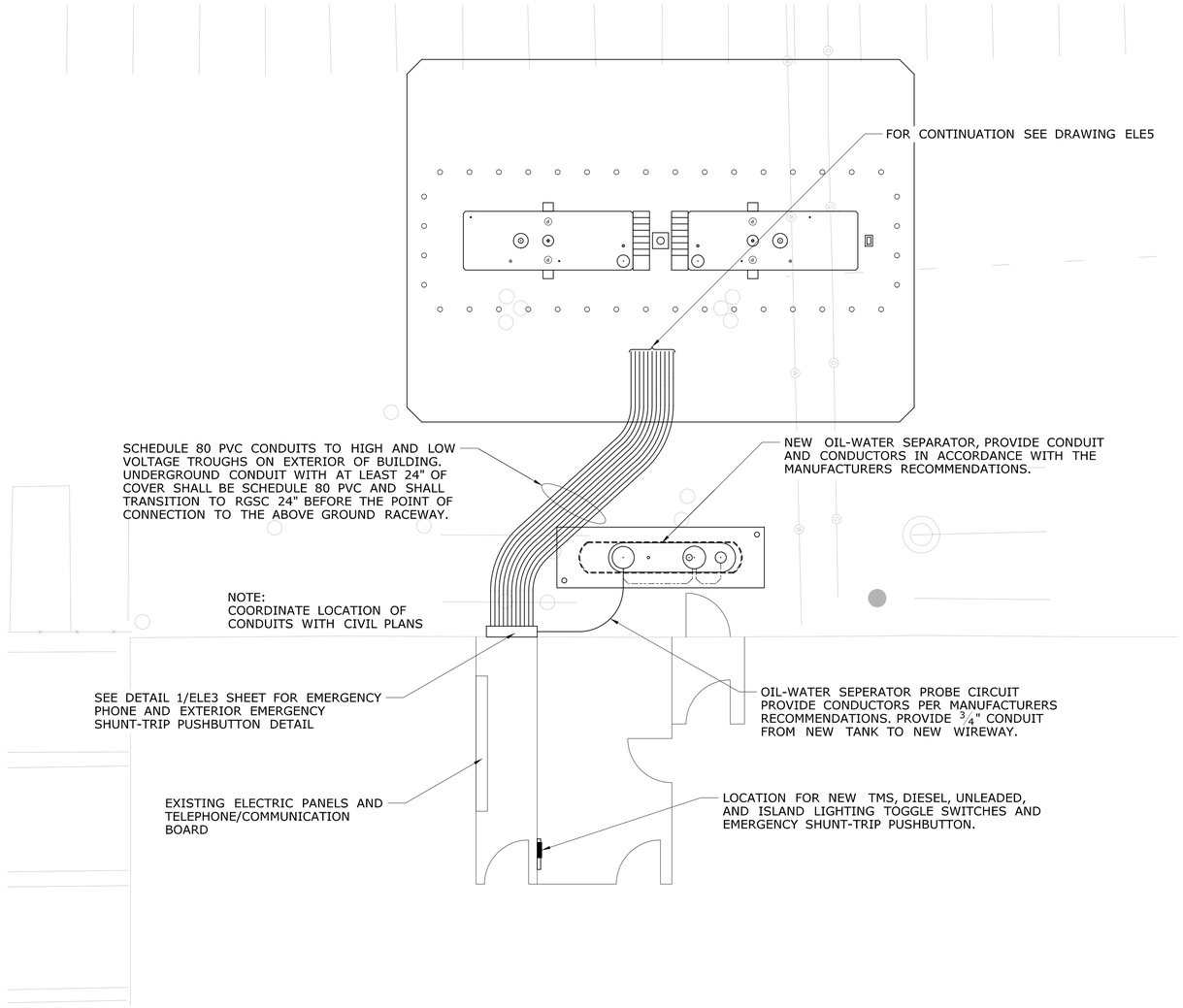

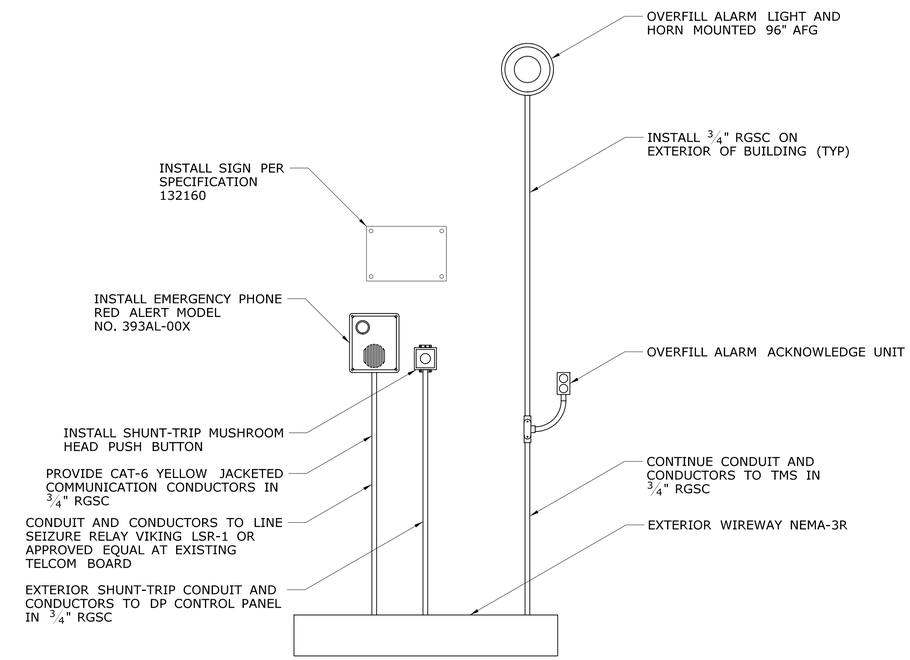

1 / ELE3 **OFFICE EXTERIOR SOUTH WALL - PROPOSED WORK**

NOT TO SCALE

REV.	DATE	REVISION DESCRIPTION	SHEET NO.

THE INFORMATION, INCLUDING ESTIMATED QUANTITIES OF WORK, SHOWN ON THESE SHEETS IS BASED ON LIMITED INVESTIGATIONS BY THE STATE AND IS IN NO WAY WARRANTED TO INDICATE THE CONDITIONS OF ACTUAL QUANTITIES OF WORK WHICH WILL BE REQUIRED.

Plotted Date: 8/10/2015

DESIGNER/DRAFTER: **WAF**

CHECKED BY: **MS**

SCALE AS NOTED

STATE OF CONNECTICUT
DEPARTMENT OF TRANSPORTATION

Filename: $FILEA$

SIGNATURE/BLOCK:

STATE OF CONNECTICUT · BRIAN P. MCKENNA · No. 21640 · LICENSED · PROFESSIONAL ENGINEER

PROJECT TITLE:
FARMINGTON AND WATERBURY MAINTENANCE FACILITIES TANK REPLACEMENT

TOWN: **WATERBURY**

DRAWING TITLE: **ELECTRIC SITE PLAN**

PROJECT NO. **174-388**

DRAWING NO. **ELE3**

SHEET NO. **07.07**

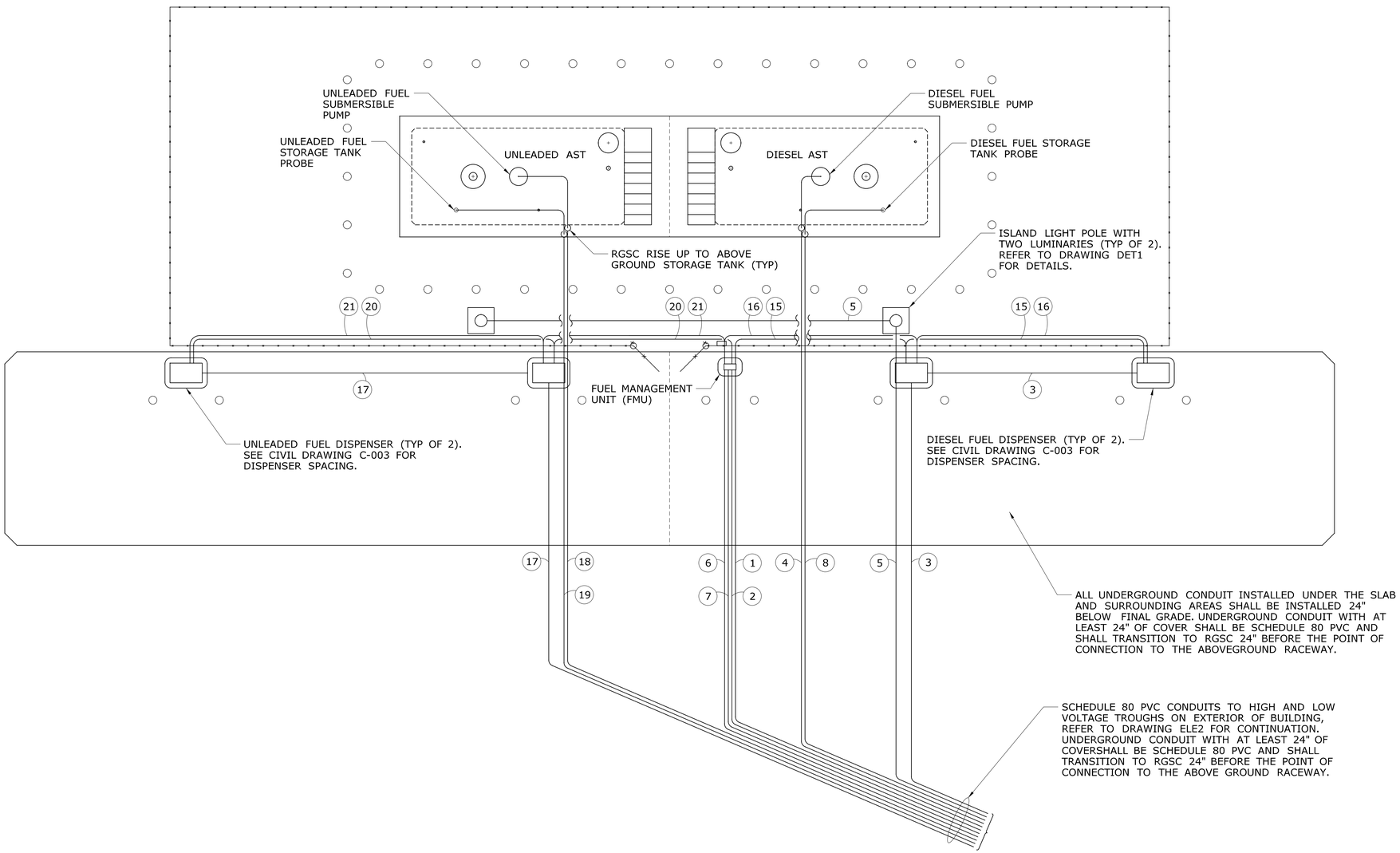

MOTOR FUEL ISLAND CONDUIT CODED NOTES:

1. SPARE POWER 3/4" CONDUIT WITH PULL STRING TO FMU
2. FMU POWER (2)#12, (1)#12G, 3/4" CONDUIT
3. DIESEL DISPENSER POWER (2)#10, (1)#10G, 3/4" CONDUIT
4. DIESEL SUBMERSIBLE PUMP POWER (2)#10, (1)#10G, 3/4" CONDUIT
5. ISLAND LIGHTING POWER (2)#10, (1)#10G, 3/4" CONDUIT
6. SPARE COMMUNICATION CAT-6 CABLE (RATED FOR UNDERGROUND) TO FMU
7. FMU AND TANK MONITORING SYSTEM COMMUNICATIONS (4-CONDUCTOR SHIELDED #24 AWG OR AS PER MANUFACTURER SPECIFICATIONS). FMU AND NETWORK COMMUNICATIONS CAT-6 CABLE RATED FOR UNDERGROUND INSTALLATION.
8. IN TANK PROBE CONDUCTORS FROM TANK MONITORING SYSTEM TO DIESEL TANK (NUMBER AND SIZE OF CONDUCTORS PER MANUFACTURER SPECIFICATIONS).
15. DIESEL DISPENSER PULSER CONTROL FROM FMU (NUMBER AND SIZE OF CONDUCTORS PER MANUFACTURER SPECIFICATIONS).
16. DIESEL DISPENSER AC POWER CONTROL FROM FMU (NUMBER AND SIZE OF CONDUCTORS PER MANUFACTURER SPECIFICATIONS).
17. UNLEADED DISPENSER POWER (2)#10, (1)#10G, 3/4" CONDUIT
18. UNLEADED SUBMERSIBLE PUMP POWER (2)#10, (1)#10G, 3/4" CONDUIT
19. IN TANK PROBE CONDUCTORS FROM TANK MONITORING SYSTEM TO UNLEADED TANK (NUMBER AND SIZE OF CONDUCTORS PER MANUFACTURER SPECIFICATIONS).
20. UNLEADED DISPENSER PULSER CONTROL FROM FMU (NUMBER AND SIZE OF CONDUCTORS PER MANUFACTURER SPECIFICATIONS).
21. UNLEADED DISPENSER AC POWER CONTROL FROM FMU (NUMBER AND SIZE OF CONDUCTORS PER MANUFACTURES SPECIFICATIONS).

NOTES:

1. ALL CONDUITS SHALL BE PROVIDED WITH EXPLOSION PROOF FITTINGS AND SEALED AS REQUIRED IN ACCORDANCE WITH NFPA-70, STATE, AND LOCAL CODES.
2. SEE CIVIL DRAWINGS FOR MOTOR FUEL TANK AND FUEL ISLAND DETAILS.
3. ALL METALLIC PARTS OF THE TANK AND ALL METTALIC PARTS SHALL BE BONDED TOGETHER AND CONNECTED TO A GROUND ROD.

REV.	DATE	REVISION DESCRIPTION	SHEET NO.

THE INFORMATION, INCLUDING ESTIMATED QUANTITIES OF WORK, SHOWN ON THESE SHEETS IS BASED ON LIMITED INVESTIGATIONS BY THE STATE AND IS IN NO WAY WARRANTED TO INDICATE THE CONDITIONS OF ACTUAL QUANTITIES OF WORK WHICH WILL BE REQUIRED.

Plotted Date: 8/10/2015

DESIGNER/DRAFTER: **WAF**

CHECKED BY: **MS**

SCALE IN FEET 0 5 10

SCALE 1"=5'

STATE OF CONNECTICUT
DEPARTMENT OF TRANSPORTATION

Filename: $FILEA$

SIGNATURE/ BLOCK:

STATE OF CONNECTICUT · BRUCE P. MACHIAN · No. 21640 · LICENSED · PROFESSIONAL ENGINEER

PROJECT TITLE:

FARMINGTON AND WATERBURY MAINTENANCE FACILITIES TANK REPLACEMENT

TOWN: **FARMINGTON**

DRAWING TITLE: **MOTOR FUEL ISLAND CONDUIT PLAN**

PROJECT NO. **174-388**

DRAWING NO. **ELE4**

SHEET NO. **07.08**

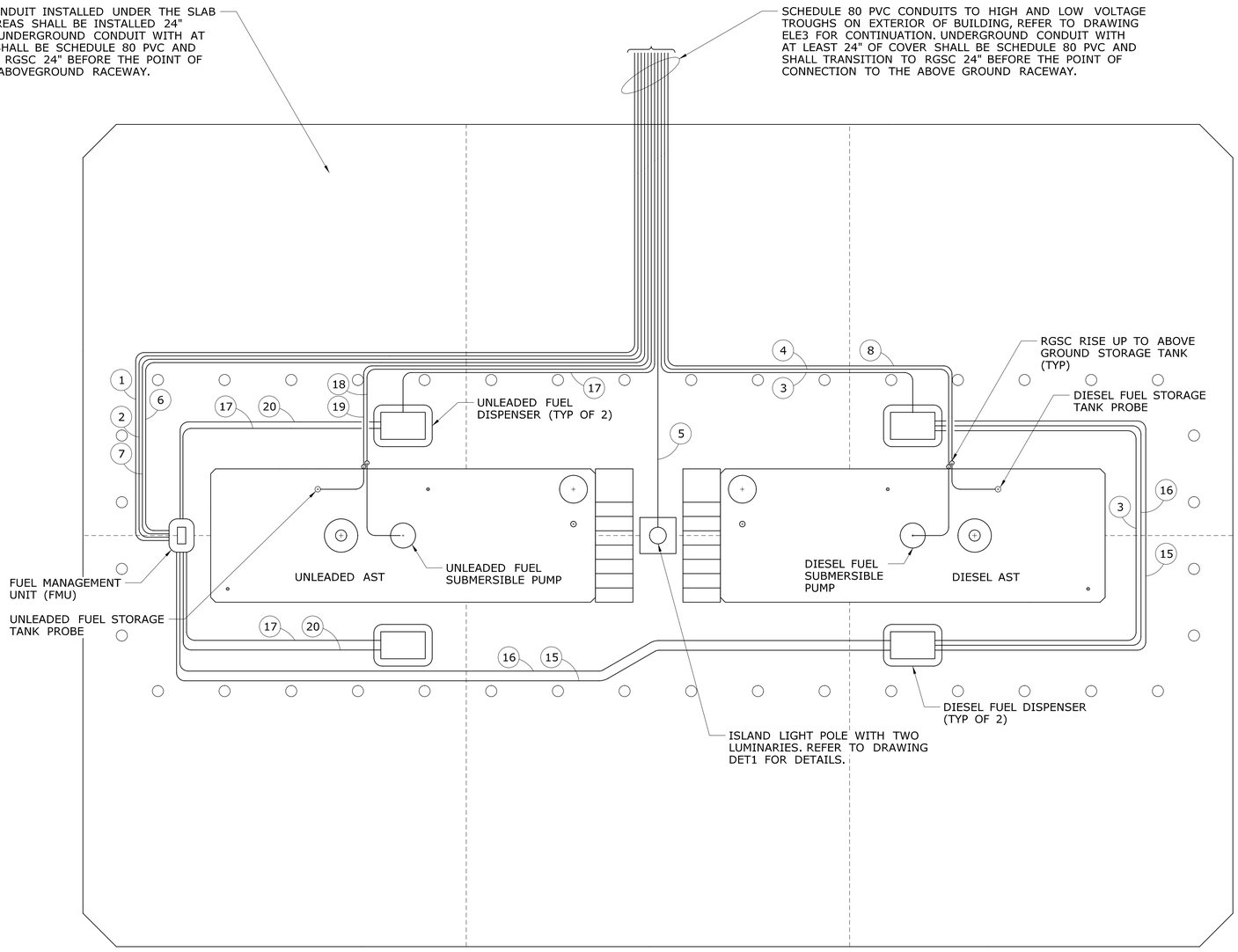

MOTOR FUEL ISLAND CONDUIT CODED NOTES:

1. SPARE POWER 3/4" RGS CONDUIT WITH PULL STRING TO FMU
2. FMU POWER (2)#12, (1)#12G, 3/4" CONDUIT
3. DIESEL DISPENSER POWER (2)#10, (1)#10G, 3/4" CONDUIT
4. DIESEL SUBMERSIBLE PUMP POWER (2)#10, (1)#10G, 3/4" CONDUIT
5. ISLAND LIGHTING POWER (2)#10, (1)#10G, 3/4" CONDUIT
6. SPARE COMMUNICATION CAT-6 CABLE (RATED FOR UNDERGROUND) TO FMU
7. FMU AND TANK MONITORING SYSTEM COMMUNICATIONS (4-CONDUCTOR SHIELDED #24 AWG OR AS PER MANUFACTURER SPECIFICATIONS). FMU AND NETWORK COMMUNICATIONS CAT-6 CABLE RATED FOR UNDERGROUND INSTALLATION.
8. IN TANK PROBE CONDUCTORS FROM TANK MONITORING SYSTEM TO DIESEL TANK (NUMBER AND SIZE OF CONDUCTORS PER MANUFACTURER SPECIFICATIONS).
15. DIESEL DISPENSER PULSER CONTROL FROM FMU (NUMBER AND SIZE OF CONDUCTORS PER MANUFACTURER SPECIFICATIONS).
16. DIESEL DISPENSER AC POWER CONTROL FROM FMU (NUMBER AND SIZE OF CONDUCTORS PER MANUFACTURER SPECIFICATIONS).
17. UNLEADED DISPENSER POWER (2)#10, (1)#10G, 3/4" CONDUIT
18. UNLEADED SUBMERSIBLE PUMP POWER (2)#10, (1)#10G, 3/4" CONDUIT
19. IN TANK PROBE CONDUCTORS FROM TANK MONITORING SYSTEM TO UNLEADED TANK (NUMBER AND SIZE OF CONDUCTORS PER MANUFACTURER SPECIFICATIONS).
20. UNLEADED DISPENSER PULSER CONTROL FROM FMU (NUMBER AND SIZE OF CONDUCTORS PER MANUFACTURER SPECIFICATIONS).

NOTES:

1. ALL CONDUITS SHALL BE PROVIDED WITH EXPLOSION PROOF FITTINGS AND SEALED AS REQUIRED IN ACCORDANCE WITH NFPA-70, STATE, AND LOCAL CODES.
2. SEE CIVIL DRAWINGS FOR MOTOR FUEL TANK AND FUEL ISLAND DETAILS.
3. ALL METALLIC PARTS OF THE TANK AND ALL METALLIC PARTS SHALL BE BONDED TOGETHER AND CONNECTED TO A GROUND ROD.

REV.	DATE	REVISION DESCRIPTION	SHEET NO.

THE INFORMATION, INCLUDING ESTIMATED QUANTITIES OF WORK, SHOWN ON THESE SHEETS IS BASED ON LIMITED INVESTIGATIONS BY THE STATE AND IS IN NO WAY WARRANTED TO INDICATE THE CONDITIONS OF ACTUAL QUANTITIES OF WORK WHICH WILL BE REQUIRED.

Plotted Date: 8/10/2015

DESIGNER/DRAFTER: **WAF**

CHECKED BY: **MS**

SCALE IN FEET 0 4 8

SCALE 1"=4'

STATE OF CONNECTICUT
DEPARTMENT OF TRANSPORTATION

Filename: $FILEA$

SIGNATURE/BLOCK:

STATE OF CONNECTICUT · BRUCE P. MORRISON · No. 21640 · LICENSED PROFESSIONAL ENGINEER

PROJECT TITLE:

FARMINGTON AND WATERBURY MAINTENANCE FACILITIES TANK REPLACEMENT

TOWN: **WATERBURY**

DRAWING TITLE: **MOTOR FUEL ISLAND CONDUIT PLAN**

PROJECT NO. **174-388**

DRAWING NO. **ELE5**

SHEET NO. **07.09**

LOCATION: HALL MOUNTING: RECESSED SOURCE: PANEL PP1			PANEL ID PP2			VOLTS, PHASE, WIRE: 120/240V, 3ϕ, 4W MAINS: 100A MLO SHORT CIRCUIT RATING: 10KAIC	
CKT	LOAD DESCRIPTION	CB AMPS/ POLE	CONN LOAD KVA	CONN LOAD KVA	CB AMPS/ POLE	LOAD DESCRIPTION	CKT
1	NIGHT LIGHTS BAYS (B)	20/1			20/1	NIGHT LIGHTS AND OFFICE (C)	2
3	MOTORIZED VALVE FRONT OFFICE	20/1			20/1	DISCONNECT FOR GAS ISLAND	4
5	BOILER ROOM COMPUTER BOARD RECPT	20/1			20/1	PUMP STATION ALARM	6
7	SPARE	20/1			20/2	CIRC PUMP #1	8
9	CABINET HEATERS	20/1					10
11	UNIT HEATER #2	20/1			20/1	UNIT HEATER #3	12
13	UNIT HEATER #4	20/1			20/1	UNIT HEATER #5	14
15	UNIT HEATER #6	20/1			20/1	UNIT HEATER #7	16
17	SALT SHED POLE LIGHTS	20/1			20/1	UNKNOWN	18
19	RADIO	20/1			20/1	UNKNOWN	20
21	GAS ISLAND LIGHTS AND FUEL MASTER	20/1			20/1	UNKNOWN	22
23	FIRE ALARM	20/1			20/1	UNKNOWN	24
25	AIR CONDITIONER SUPERS OFFICE	20/2			30/2	WATER HEATER CIRCULATOR	26
27							28
29	UNKNOWN	20/1			30/1	UNKNOWN	30
31	TMS-3000	20/1			20/2	AIR CONDITIONER OFFICE	32
33	FMU - GAS LIGHT	20/1					34
35	UNLEADED FUEL PUMP	20/2			20/2	DIESEL FUEL PUMP	36
37							38
39	PUMP STATION SEWER	40/2			100/2	UNKNOWN	40
41							42

1 / ELE6 EXISTING PANEL PP2
NOT TO SCALE

NOTES:

1. MOUNT AND MAKE NECESSARY CONNECTION REQUIRED FOR THE NETWORK COMMUNICATION SYSTEM. THE CONTRACTOR SHALL CONTACT MR. DENIS RICHARD AT 860-594-3564 PRIOR TO THE INSTALLATION OF THE COMMUNICATION JACKS.
2. SPARE CAT-6 CABLE SHALL BE ROLLED AND SECURED WITH CABLE TIES.
3. CTDOT INFORMATION SYSTEM DEPARTMENT IS RESPONSIBLE FOR THE REMOVAL OF VOICE/FAX/MODEM CALL PROCESSOR.
4. CTDOT INFORMATION SYSTEMS OFFICE SHALL PROVIDE DIRECTION ON THE INSTALLATION OF TELEPHONE LINE FROM PUNCH BLOCK.

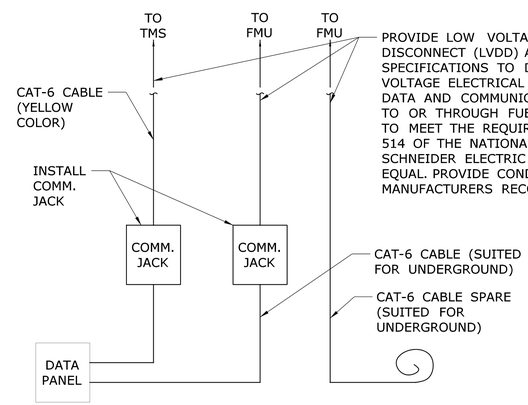

NOTE: ALL CAT-6 CABLES SHALL BE INSTALLED IN CONDUIT

4 / ELE6 COMMUNICATIONS BOARD - EXISTING WORK
NOT TO SCALE

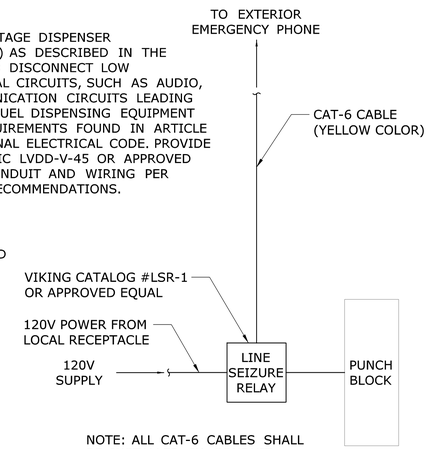

NOTE: ALL CAT-6 CABLES SHALL BE INSTALLED IN CONDUIT

5 / ELE6 COMMUNICATIONS BOARD - EXISTING WORK
NOT TO SCALE

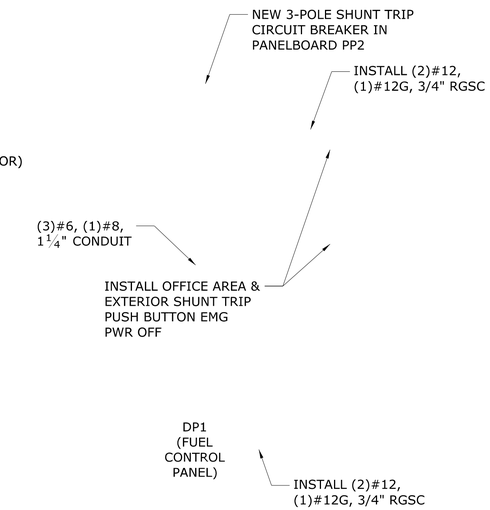

6 / ELE6 SHUNT TRIP DIAGRAM
NOT TO SCALE

LOCATION: HALL MOUNTING: RECESSED SOURCE: PANEL PP1			PANEL ID PP2			VOLTS, PHASE, WIRE: 120/240V, 3ϕ, 4W MAINS: 100A MLO SHORT CIRCUIT RATING: 10KAIC	
CKT	LOAD DESCRIPTION	CB AMPS/ POLE	CONN LOAD KVA	CONN LOAD KVA	CB AMPS/ POLE	LOAD DESCRIPTION	CKT
1	NIGHT LIGHTS BAYS (B)	20/1			20/1	NIGHT LIGHTS AND OFFICE (C)	2
3	MOTORIZED VALVE FRONT OFFICE	20/1			20/1	SPARE	4
5	BOILER ROOM COMPUTER BOARD RECPT	20/1			20/1	SPARE	6
7	SPARE	20/1			20/2	CIRC PUMP #1	8
9	CABINET HEATERS	20/1					10
11	UNIT HEATER #2	20/1			20/1	UNIT HEATER #3	12
13	UNIT HEATER #4	20/1			20/1	UNIT HEATER #5	14
15	UNIT HEATER #6	20/1			20/1	UNIT HEATER #7	16
17	SALT SHED POLE LIGHTS	20/1			20/1	UNKNOWN	18
19	RADIO	20/1			20/1	UNKNOWN	20
21	SPARE	20/1			20/1	UNKNOWN	22
23	FIRE ALARM	20/1			20/1	UNKNOWN	24
25	AIR CONDITIONER SUPERS OFFICE	20/2			30/2	WATER HEATER CIRCULATOR	26
27							28
29	UNKNOWN	20/1			30/1	UNKNOWN	30
31	SPARE	20/1			20/2	AIR CONDITIONER OFFICE	32
33	SHUNT-TRIP CIRCUIT BREAKER FOR PANELBOARD DP1	60/2					34
35					20/2	SPARE	36
37							38
39	PUMP STATION SEWER	40/2			100/2	UNKNOWN	40
41							42

2 / ELE6 REVISED PANEL PP2
NOT TO SCALE

LOCATION: OFFICE MOUNTING: SURFACE SOURCE: PANEL PP2			PANEL ID DP1			VOLTS, PHASE, WIRE: 120/240V, 3ϕ, 4W MAINS: 60A MLO SHORT CIRCUIT RATING: 10KAIC	
CKT	LOAD DESCRIPTION	CB AMPS/ POLE	CONN LOAD VA	CONN LOAD VA	CB AMPS/ POLE	LOAD DESCRIPTION	CKT
1	SHUNT-TRIP CIRCUIT	20/1	100	630	20/2	DIESEL PUMP	2
3	FUEL ISLAND LIGHT	20/1	900	630			4
5	UNLEADED PUMP	20/2	630	480	20/1	DIESEL DISPENSERS	6
7			630	420	20/1	FUEL MASTER	8
9	UNLEADED DISPENSERS	20/1	480	700	20/1	TANK MONITORING	10
11	SPARE	20/1			20/1	SPARE	12
13	SPARE	20/1			20/1	SPARE	14
15	SPARE	20/1			20/1	SPARE	16
NOTES:							
			2740.00	2860.00			
			5600.00		TOTAL VA		
			23.333333		AMPS		
			5.600000		TOTAL LOAD IN KVA		

3 / ELE6 NEW PANEL DP1
NOT TO SCALE

NOTES:

1. INSTALL SHUNT TRIP MUSHROOM HEAD PUSH BUTTON, LED-ILLUMINATED WITH POLYCHROMATIC GUARD, PUSH/TWIST RELEASE BUTTON. PROVIDE NAMEPLATE "FUEL ISLAND EMERGENCY POWER OFF". THE EMERGENCY STOP SWITCH INSTALLED IN OFFICE AND ON EXTERIOR OF THE BUILDING SHALL BE WIRED IN PARALLEL AND SHALL TRIP THE SHUNT TRIP BREAKER. THE SHUNT TRIP MUSHROOM HEAD PUSH BUTTON SHALL BE SIEMENS CATALOG NO. 52PR8GRAB OR APPROVED EQUAL. TWO (2) ARE REQUIRED.
2. BRANCH CIRCUITS EXCEEDING 100 FEET IN LENGTH SHALL BE #10 AWG. WIRING SIZE SHALL BE ADJUSTED AS NECESSARY TO REFLECT VOLTAGE DROP.
3. ANY NEW BRANCH CIRCUIT BREAKER INSTALLED IN EXISTING PANELS SHALL BE FROM THE SAME MANUFACTURER AND SHALL BE COMPATIBLE WITH THE EXISTING PANEL AND ITS RATINGS.
4. CIRCUIT BREAKERS USED FOR THE TEMPORARY FUEL STORAGE TANK SHALL REMAIN AND BE TAGGED AS 'SPARE'.
5. THE CONTRACTOR SHALL ENSURE THAT ALL THE CIRCUITS THAT WILL REMAIN ON DP ARE BALANCED IN ACCORDANCE TO SPECIFICATION 262416. THE CONTRACTOR SHALL PROVIDE A TYPED DIRECTORY FOR PANEL DP.
6. DETAILS ARE DIAGRAMMATIC IN NATURE. CONTRACTOR SHALL ROUTE CONDUIT AND LOCATE DEVICES TO AVOID OBSTRUCTION, WINDOWS, DOORS, ETC.

REV.	DATE	REVISION DESCRIPTION	SHEET NO.

THE INFORMATION, INCLUDING ESTIMATED QUANTITIES OF WORK, SHOWN ON THESE SHEETS IS BASED ON LIMITED INVESTIGATIONS BY THE STATE AND IS IN NO WAY WARRANTED TO INDICATE THE CONDITIONS OF ACTUAL QUANTITIES OF WORK WHICH WILL BE REQUIRED.

Plotted Date: 8/10/2015

DESIGNER/DRAFTER: WAF
CHECKED BY: MS
SCALE AS NOTED

STATE OF CONNECTICUT
DEPARTMENT OF TRANSPORTATION

Filename: $FILEA$

SIGNATURE/ BLOCK:

STATE OF CONNECTICUT BRIAN P. MORAN No. 21640 LICENSED PROFESSIONAL ENGINEER

PROJECT TITLE:
FARMINGTON AND WATERBURY MAINTENANCE FACILITIES TANK REPLACEMENT

TOWN: **FARMINGTON**

DRAWING TITLE:
PANEL SCHEDULE & ONE-LINE DIAGRAMS

PROJECT NO. **174-388**
DRAWING NO. **ELE6**
SHEET NO. **07.10**

LOCATION: HALL MOUNTING: RECESSED SOURCE: PANEL PP1			PANEL ID G		VOLTS, PHASE, WIRE: 120/240V, 3ϕ, 4W MAINS: 100A MLO SHORT CIRCUIT RATING: 10KAIC		
CKT	LOAD DESCRIPTION	CB AMPS/ POLE	CONN LOAD KVA	CONN LOAD KVA	CB AMPS/ POLE	LOAD DESCRIPTION	CKT
1	DIESEL PUMP	20/2			20/2	UNLEADED FUEL PUMP	2
3							4
5	BELL	20/1			30/2	UNKNOWN	6
7	AIR COMPRESSOR	20/2					8
9					30/3	UNKNOWN	10
11	BLANK	--					12
13	UNKNOWN	20/1					14
15	SPARE	20/2			20/1	FMU	16
17					20/1	ISLAND LIGHTS	18

1 / ELE7 EXISTING PANEL G

NOT TO SCALE

LOCATION: GARAGE MOUNTING: SURFACE SOURCE: PANEL PP2			PANEL ID G		VOLTS, PHASE, WIRE: 120/208V, 3ϕ, 4W MAINS: 60A MCB SHORT CIRCUIT RATING: 10KAIC		
CKT	LOAD DESCRIPTION	CB AMPS/ POLE	CONN LOAD VA	CONN LOAD VA	CB AMPS/ POLE	LOAD DESCRIPTION	CKT
1	MAIN SHUNT-TRIP	60/2			20/2	AIR COMPRESSOR	2
3							4
5					30/2	UNKNOWN	6
7							8
9	UNKNOWN	30/3			20/1	UNKNOWN	10
11					20/2	SPARE	12
13	SPACE	--					14
15	SPACE	--			--	SPACE	16
17	SPACE	--			--	SPACE	18

2 / ELE7 MODIFIED PANEL G

NOT TO SCALE

LOCATION: GARAGE MOUNTING: SURFACE SOURCE: PANEL PP2			PANEL ID DP1		VOLTS, PHASE, WIRE: 120/208V, 1ϕ, 3W MAINS: 60A MLO SHORT CIRCUIT RATING: 10KAIC		
CKT	LOAD DESCRIPTION	CB AMPS/ POLE	CONN LOAD VA	CONN LOAD VA	CB AMPS/ POLE	LOAD DESCRIPTION	CKT
1	SHUNT-TRIP CIRCUIT	20/1	100	630	20/2	DIESEL PUMP	2
3	FUEL ISLAND LIGHT	20/1	900	630			4
5	UNLEADED PUMP	20/2	630	480	20/1	DIESEL DISPENSERS	6
7			630	420	20/1	FUEL MASTER	8
9	UNLEADED DISPENSERS	20/1	480	700	20/1	TANK MONITORING	10
11	SPARE	20/1			20/1	SPARE	12
NOTES:							
			2740.00	2860.00			
			5600.00		TOTAL VA		
			23.333333		AMPS		
			5.600000		TOTAL LOAD IN KVA		

3 / ELE7 NEW PANEL DP1

NOT TO SCALE

NOTES:

1. MOUNT AND MAKE NECESSARY CONNECTION REQUIRED FOR THE NETWORK COMMUNICATION SYSTEM. THE CONTRACTOR SHALL CONTACT MR. DENIS RICHARD AT 860-594-3564 PRIOR TO THE INSTALLATION OF THE COMMUNICATION JACKS.
2. SPARE CAT-6 CABLE SHALL BE ROLLED AND SECURED WITH CABLE TIES.
3. CTDOT INFORMATION SYSTEM DEPARTMENT IS RESPONSIBLE FOR THE REMOVAL OF VOICE/FAX/MODEM CALL PROCESSOR.
4. CTDOT INFORMATION SYSTEMS OFFICE SHALL PROVIDE DIRECTION ON THE INSTALLATION OF TELEPHONE LINE FROM PUNCH BLOCK.

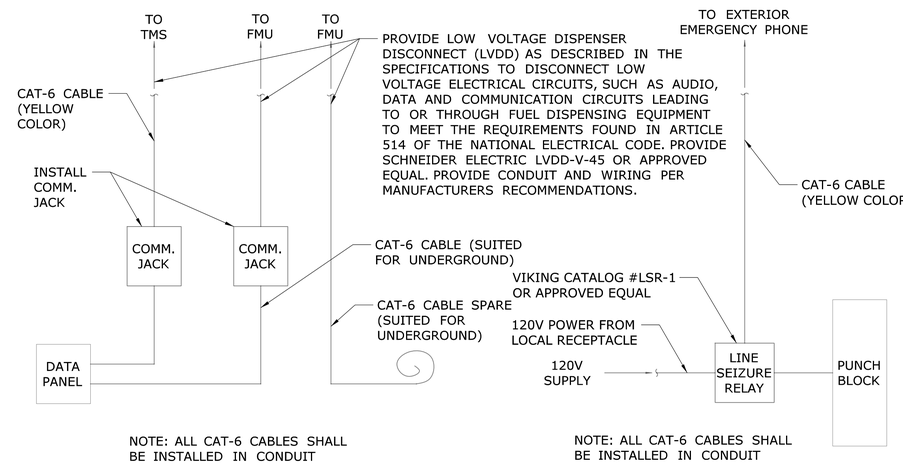

4 / ELE7 COMMUNICATIONS BOARD - EXISTING WORK

NOT TO SCALE

5 / ELE7 COMMUNICATIONS BOARD - EXISTING WORK

NOT TO SCALE

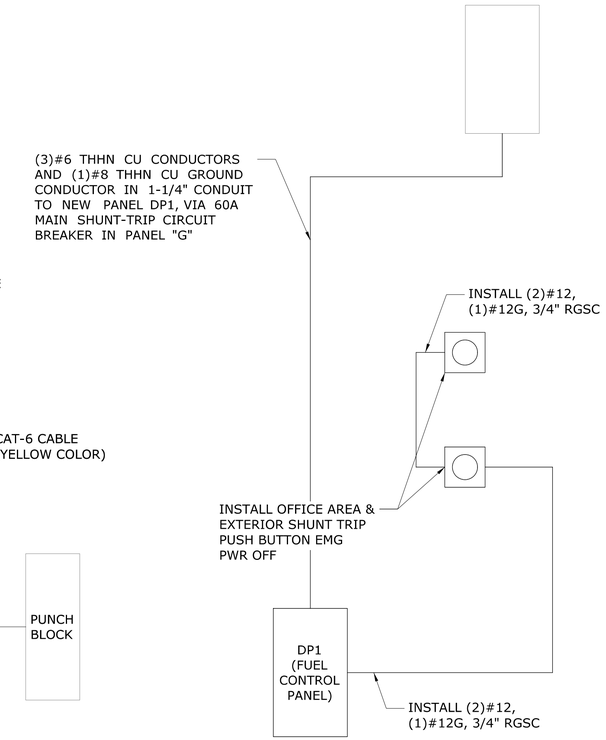

6 / ELE7 SHUNT TRIP DIAGRAM

NOT TO SCALE

NOTES:

1. INSTALL SHUNT TRIP MUSHROOM HEAD PUSH BUTTON, LED-ILLUMINATED WITH POLYCHROMATIC GUARD, PUSH/TWIST RELEASE BUTTON. PROVIDE NAMEPLATE "FUEL ISLAND EMERGENCY POWER OFF". THE EMERGENCY STOP SWITCH INSTALLED IN OFFICE AND ON EXTERIOR OF THE BUILDING SHALL BE WIRED IN PARALLEL AND SHALL TRIP THE SHUNT TRIP BREAKER. THE SHUNT TRIP MUSHROOM HEAD PUSH BUTTON SHALL BE SIEMENS CATALOG NO. 52PR8GRAB OR APPROVED EQUAL. TWO (2) ARE REQUIRED.
2. BRANCH CIRCUITS EXCEEDING 100 FEET IN LENGTH SHALL BE #10 AWG. WIRING SIZE SHALL BE ADJUSTED AS NECESSARY TO REFLECT VOLTAGE DROP.
3. ANY NEW BRANCH CIRCUIT BREAKER INSTALLED IN EXISTING PANELS SHALL BE FROM THE SAME MANUFACTURER AND SHALL BE COMPATIBLE WITH THE EXISTING PANEL AND ITS RATINGS.
4. CIRCUIT BREAKERS USED FOR THE TEMPORARY FUEL STORAGE TANK SHALL REMAIN AND BE TAGGED AS 'SPARE'.
5. THE CONTRACTOR SHALL ENSURE THAT ALL THE CIRCUITS THAT WILL REMAIN ON DP ARE BALANCED IN ACCORDANCE TO SPECIFICATION 262416. THE CONTRACTOR SHALL PROVIDE A TYPED DIRECTORY FOR PANEL DP.
6. DETAILS ARE DIAGRAMMATIC IN NATURE. CONTRACTOR SHALL ROUTE CONDUIT AND LOCATE DEVICES TO AVOID OBSTRUCTION, WINDOWS, DOORS, ETC.

REV.	DATE	REVISION DESCRIPTION	SHEET NO.

THE INFORMATION, INCLUDING ESTIMATED QUANTITIES OF WORK, SHOWN ON THESE SHEETS IS BASED ON LIMITED INVESTIGATIONS BY THE STATE AND IS IN NO WAY WARRANTED TO INDICATE THE CONDITIONS OF ACTUAL QUANTITIES OF WORK WHICH WILL BE REQUIRED.

Plotted Date: 8/10/2015

DESIGNER/DRAFTER: WAF
CHECKED BY: MS
SCALE AS NOTED

STATE OF CONNECTICUT
DEPARTMENT OF TRANSPORTATION

Filename: $FILEA$

SIGNATURE/ BLOCK:

STATE OF CONNECTICUT · BRUCE P. MACKENZIE · No. 21640 · LICENSED · PROFESSIONAL ENGINEER

PROJECT TITLE:
FARMINGTON AND WATERBURY MAINTENANCE FACILITIES TANK REPLACEMENT

TOWN: **WATERBURY**

DRAWING TITLE: **PANEL SCHEDULE & ONE-LINE DIAGRAMS**

PROJECT NO. **174-388**
DRAWING NO. **ELE7**
SHEET NO. **07.11**

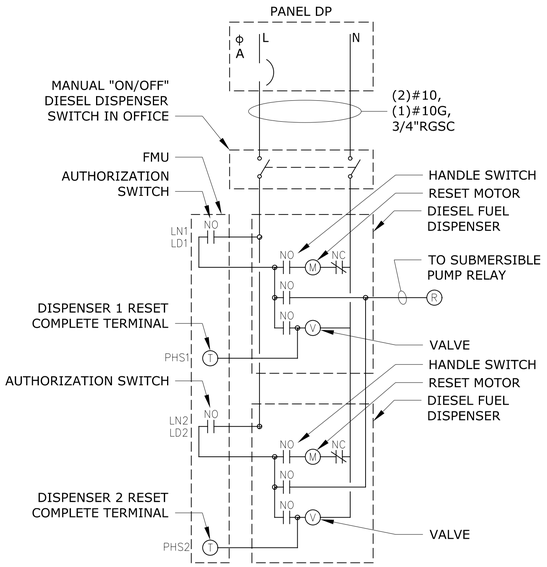

1 / ELE8 DUAL DISPENSER DIAGRAM
NOT TO SCALE

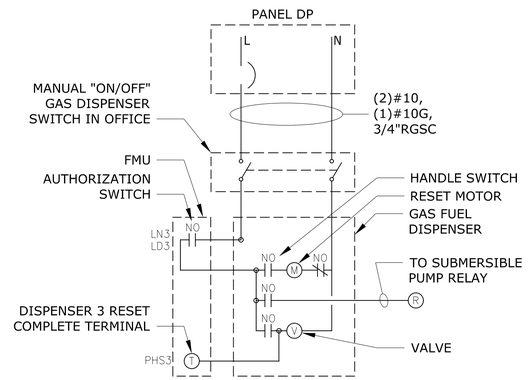

2 / ELE8 SINGLE DISPENSER DIAGRAM
NOT TO SCALE

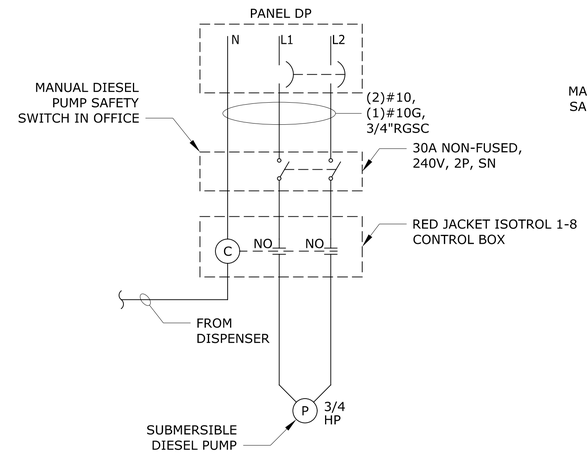

3 / ELE8 DIESEL PUMP DIAGRAM
NOT TO SCALE

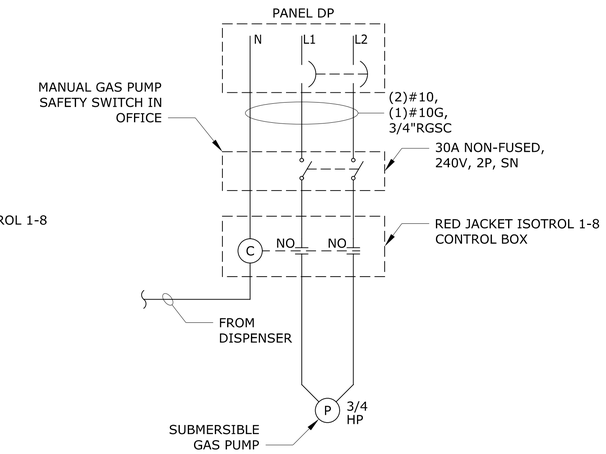

4 / ELE8 UNLEADED PUMP DIAGRAM
NOT TO SCALE

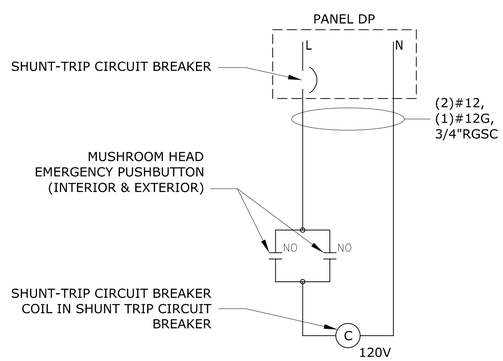

5 / ELE8 SHUNT TRIP DIAGRAM
NOT TO SCALE

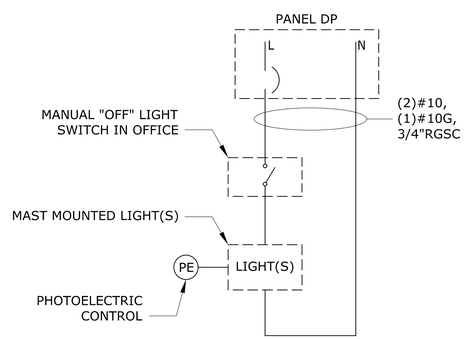

6 / ELE8 FUEL ISLAND LIGHT DIAGRAM
NOT TO SCALE

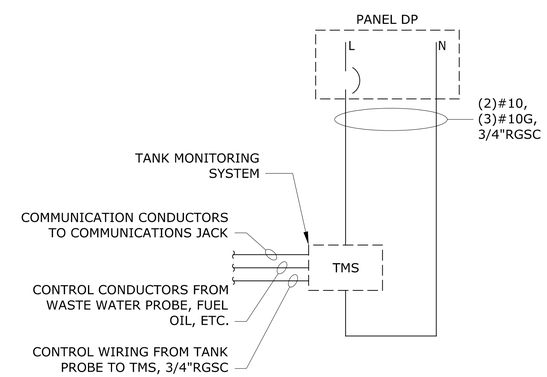

7 / ELE8 TMS POWER DIAGRAM
NOT TO SCALE

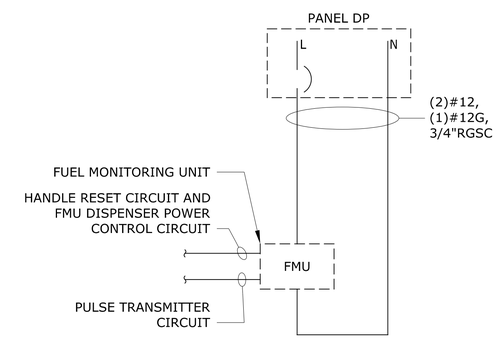

8 / ELE8 FMU POWER DIAGRAM
NOT TO SCALE

REV.	DATE	REVISION DESCRIPTION	SHEET NO.

THE INFORMATION, INCLUDING ESTIMATED QUANTITIES OF WORK, SHOWN ON THESE SHEETS IS BASED ON LIMITED INVESTIGATIONS BY THE STATE AND IS IN NO WAY WARRANTED TO INDICATE THE CONDITIONS OF ACTUAL QUANTITIES OF WORK WHICH WILL BE REQUIRED.

Plotted Date: 8/10/2015

DESIGNER/DRAFTER: **WAF**
CHECKED BY: **MS**
SCALE AS NOTED

STATE OF CONNECTICUT
DEPARTMENT OF TRANSPORTATION

Filename: $FILEA$

SIGNATURE/BLOCK:

STATE OF CONNECTICUT · BRIAN P. MONTANA · No. 21640 · LICENSED · PROFESSIONAL ENGINEER

PROJECT TITLE:
FARMINGTON AND WATERBURY MAINTENANCE FACILITIES TANK REPLACEMENT

TOWN: **FARMINGTON & WATERBURY**

DRAWING TITLE: **TYPICAL ONE-LINE DIAGRAMS**

PROJECT NO. **174-388**
DRAWING NO. **ELE8**
SHEET NO. **07.12**

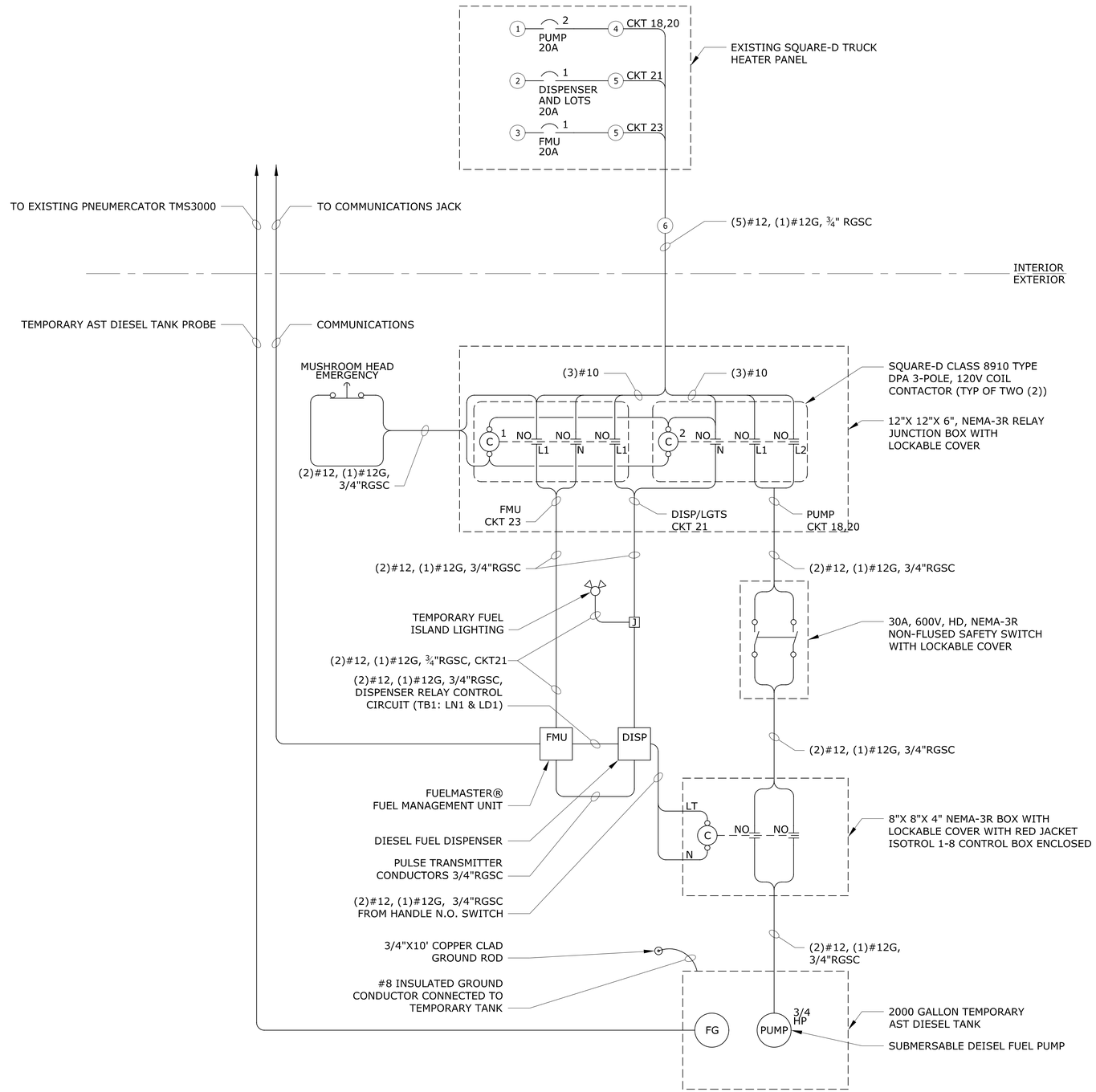

DIAGRAM KEY NOTES

1. PROVIDE 2-POLE, 20A CIRCUIT BREAKER OF THE SAME TYPE AND MANUFACTURER AS PANELBOARD FOR SUBMERSIBLE DIESEL FUEL PUMP
2. PROVIDE 1-POLE, 20A CIRCUIT BREAKER OF THE SAME TYPE AND MANUFACTURER AS PANELBOARD FOR DIESEL FUEL DISPENSER AND TEMPORARY LIGHT FIXTURE
3. PROVIDE 1-POLE, 20A CIRCUIT BREAKER OF THE SAME TYPE AND MANUFACTURER AS PANELBOARD FOR FUEL MANAGEMENT UNIT (FMU)
4. (2)#12AWG
5. (1)#12AWG
6. (16)#12AWG CONDUCTORS: (2) PUMP, (1) DISPENSER, (1) FMU AND LIGHTS, (1) NEUTRAL, (1) GROUND

REV.	DATE	REVISION DESCRIPTION	SHEET NO.

THE INFORMATION, INCLUDING ESTIMATED QUANTITIES OF WORK, SHOWN ON THESE SHEETS IS BASED ON LIMITED INVESTIGATIONS BY THE STATE AND IS IN NO WAY WARRANTED TO INDICATE THE CONDITIONS OF ACTUAL QUANTITIES OF WORK WHICH WILL BE REQUIRED.

Plotted Date: 8/10/2015

DESIGNER/DRAFTER: **WAF**

CHECKED BY: **MS**

NOT TO SCALE

STATE OF CONNECTICUT
DEPARTMENT OF TRANSPORTATION

Filename: $FILEA$

SIGNATURE/ BLOCK:

STATE OF CONNECTICUT · BRIAN P. MURPHY · No. 21640 · LICENSED · PROFESSIONAL ENGINEER

PROJECT TITLE:
FARMINGTON AND WATERBURY MAINTENANCE FACILITIES TANK REPLACEMENT

TOWN: **WATERBURY**

DRAWING TITLE:
TEMPORARY FUEL DISPENSER ONE-LINE DIAGRAM

PROJECT NO. **174-388**

DRAWING NO. **ELE9**

SHEET NO. **07.13**

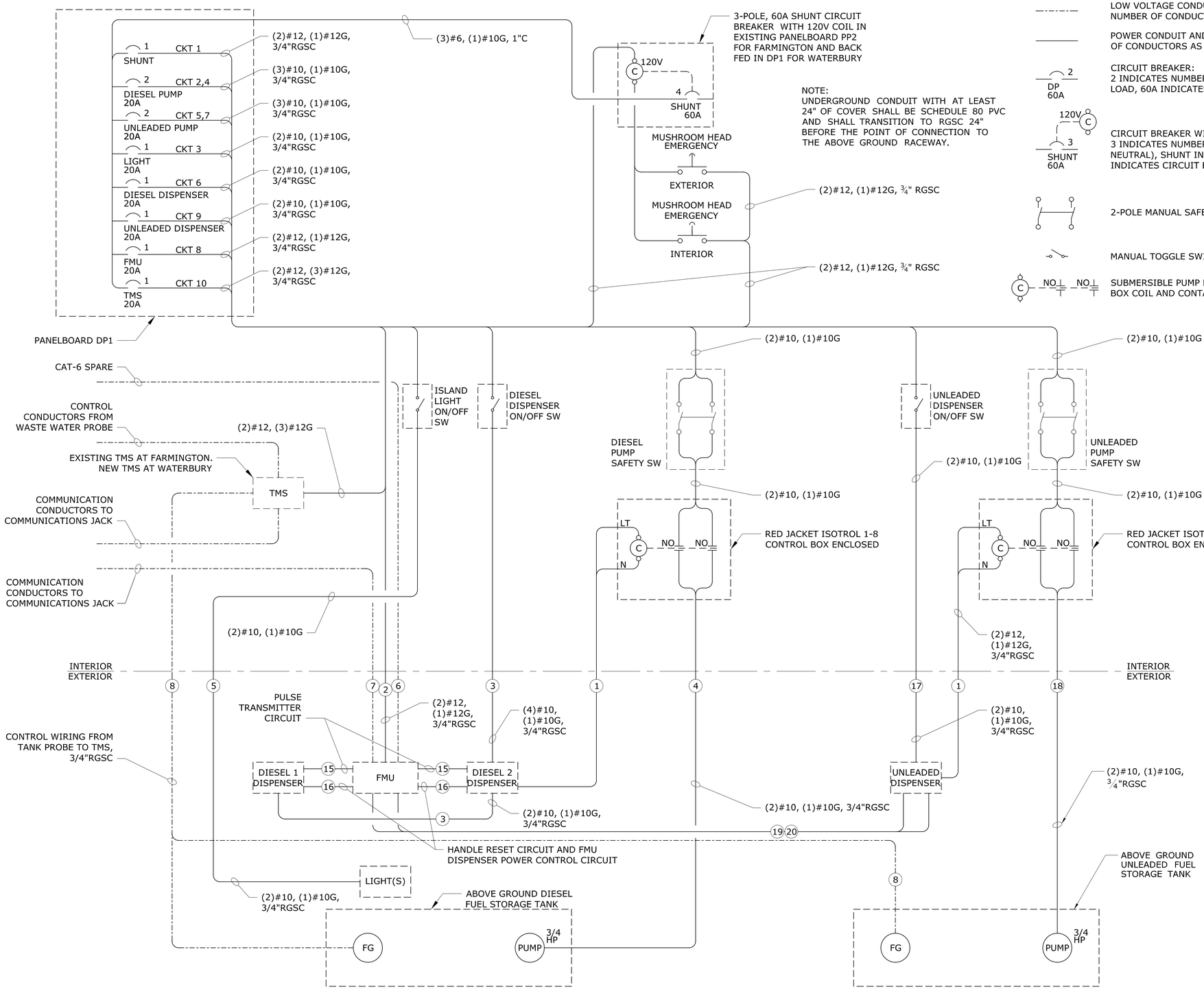

LOW VOLTAGE CONDUIT AND CONDUCTOR: SIZE AND NUMBER OF CONDUCTORS AS INDICATED ON DRAWINGS

POWER CONDUIT AND CONDUCTOR: SIZE AND NUMBER OF CONDUCTORS AS INDICATED ON DRAWINGS

2 DP 60A — CIRCUIT BREAKER: 2 INDICATES NUMBER OF POLES, DP INDICATES LOAD, 60A INDICATES CIRCUIT BREAKER SIZE

120V C 3 SHUNT 60A — CIRCUIT BREAKER WITH SHUNT COIL: 3 INDICATES NUMBER OF POLES (SWITCHED NEUTRAL), SHUNT INDICATES ACTION, 60A INDICATES CIRCUIT BREAKER SIZE

2-POLE MANUAL SAFETY SWITCH

MANUAL TOGGLE SWITCH

C NO NO — SUBMERSIBLE PUMP RELAY CONTROL BOX COIL AND CONTACTS

TMS — TANK MONITORING SYSTEM

DISPENSER — FUEL DISPENSER: DIESEL OR GASOLINE AS INDICATED

FMU — FUEL MANAGEMENT UNIT

LIGHT — LIGHT POLE AND FIXTURE(S)

PUMP 3/4 HP — SUBMERSIBLE DEISEL FUEL PUMP MOTOR

FG — TANK PROBE: FUEL GAUGE

NOTE:
UNDERGROUND CONDUIT WITH AT LEAST 24" OF COVER SHALL BE SCHEDULE 80 PVC AND SHALL TRANSITION TO RGSC 24" BEFORE THE POINT OF CONNECTION TO THE ABOVE GROUND RACEWAY.

MOTOR FUEL ISLAND CONDUIT CODED NOTES:

1. PUMP CONTROL CIRCUIT FROM FMU TO SUBMERSIBLE PUMP CONTROLLER (2) #12, (1)#12G, 3/4" CONDUIT
2. FMU POWER (2)#12, (1)#12G, 3/4" CONDUIT
3. DIESEL DISPENSER POWER (2)#10, (1)#10G, 3/4" CONDUIT
4. DIESEL SUBMERSIBLE PUMP POWER (2)#10, (1)#10G, 3/4" CONDUIT
5. ISLAND LIGHTING POWER (2)#10, (1)#10G, 3/4" CONDUIT
6. SPARE COMMUNICATION CAT-6 CABLE (RATED FOR UNDERGROUND) TO FMU
7. FMU AND TANK MONITORING SYSTEM COMMUNICATIONS (4-CONDUCTOR SHIELDED #24 AWG OR AS PER MANUFACTURER SPECIFICATIONS). FMU AND NETWORK COMMUNICATIONS CAT-6 CABLE RATED FOR UNDERGROUND INSTALLATION.
8. IN TANK PROBE CONDUCTORS FROM TANK MONITORING SYSTEM TO DIESEL TANK (NUMBER AND SIZE OF CONDUCTORS PER MANUFACTURER SPECIFICATIONS).
15. DIESEL DISPENSER PULSER CONTROL FROM FMU (NUMBER AND SIZE OF CONDUCTORS PER MANUFACTURER SPECIFICATIONS).
16. DIESEL DISPENSER AC POWER CONTROL FROM FMU (NUMBER AND SIZE OF CONDUCTORS PER MANUFACTURES SPECIFICATIONS).
17. UNLEADED DISPENSER POWER (2)#10, (1)#10G, 3/4" CONDUIT
18. UNLEADED SUBMERSIBLE PUMP POWER (2)#10, (1)#10G, 3/4" CONDUIT
19. UNLEADED DISPENSER PULSER CONTROL FROM FMU (NUMBER AND SIZE OF CONDUCTORS PER MANUFACTURER SPECIFICATIONS).
20. UNLEADED DISPENSER AC POWER CONTROL FROM FMU (NUMBER AND SIZE OF CONDUCTORS PER MANUFACTURES SPECIFICATIONS).

REV.	DATE	REVISION DESCRIPTION	SHEET NO.

THE INFORMATION, INCLUDING ESTIMATED QUANTITIES OF WORK, SHOWN ON THESE SHEETS IS BASED ON LIMITED INVESTIGATIONS BY THE STATE AND IS IN NO WAY WARRANTED TO INDICATE THE CONDITIONS OF ACTUAL QUANTITIES OF WORK WHICH WILL BE REQUIRED.

Plotted Date: 8/10/2015

DESIGNER/DRAFTER: WAF
CHECKED BY: MS
NOT TO SCALE

STATE OF CONNECTICUT
DEPARTMENT OF TRANSPORTATION

Filename: $FILEA$

SIGNATURE/BLOCK:

PROJECT TITLE:
FARMINGTON AND WATERBURY MAINTENANCE FACILITIES TANK REPLACEMENT

TOWN: FARMINGTON & WATERBURY

DRAWING TITLE: FUEL DISPENSER ONE-LINE DIAGRAMS

PROJECT NO. 174-388
DRAWING NO. ELE10
SHEET NO. 07.14

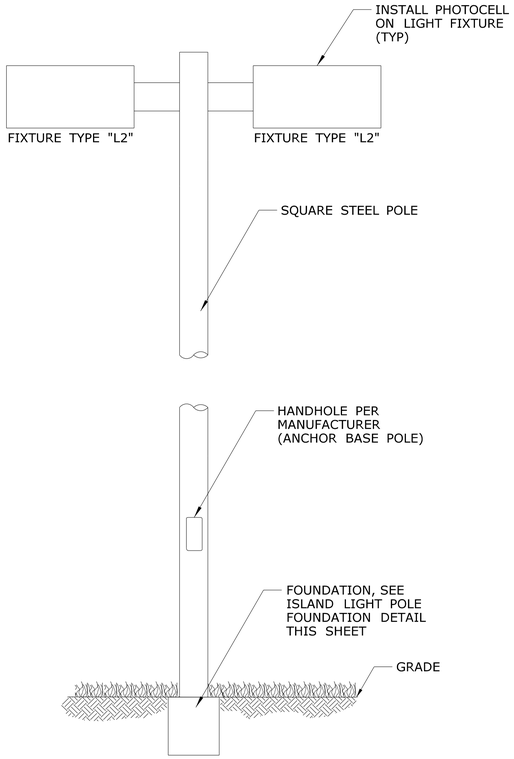

1 / DET1 ISLAND LIGHT FIXTURE DETAIL

NOT TO SCALE

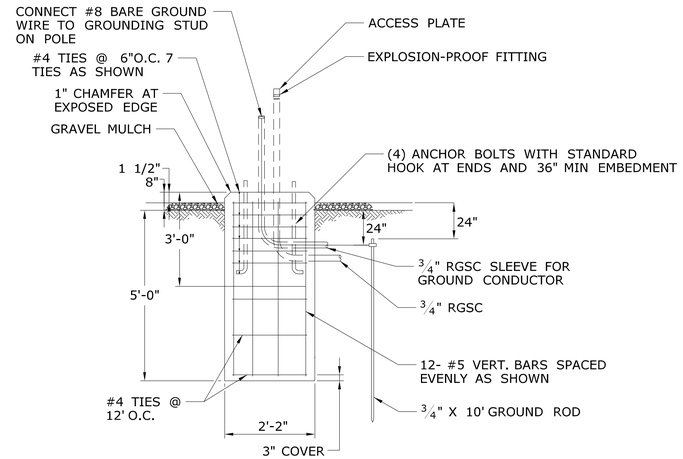

2 / DET1 ISLAND LIGHT POLE FOUNDATION DETAIL

NOT TO SCALE

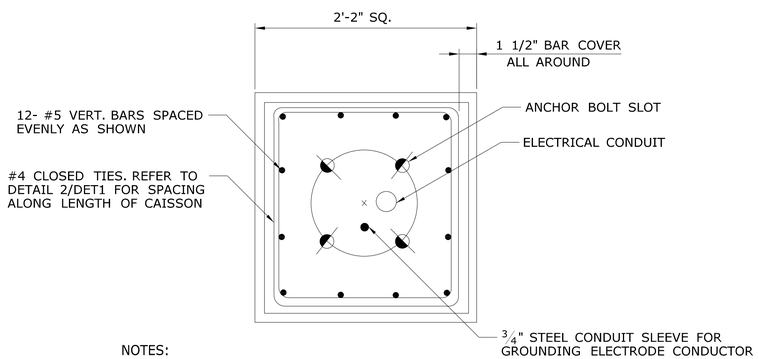

NOTES:

1. FACTORY SUPPLIED TEMPLATES MUST BE USED WHEN SETTING ANCHOR BOLTS, FIELD-VERIFY DIMENSIONS BEFORE CONSTRUCTION.

4 / DET1 SITE LIGHTING POLE BASE PLATE

NOT TO SCALE

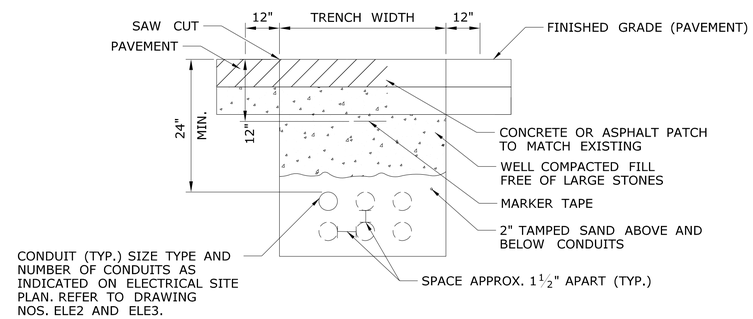

3 / DET1 CONDUIT TRENCH DETAIL

NOT TO SCALE

REV.	DATE	REVISION DESCRIPTION	SHEET NO.

THE INFORMATION, INCLUDING ESTIMATED QUANTITIES OF WORK, SHOWN ON THESE SHEETS IS BASED ON LIMITED INVESTIGATIONS BY THE STATE AND IS IN NO WAY WARRANTED TO INDICATE THE CONDITIONS OF ACTUAL QUANTITIES OF WORK WHICH WILL BE REQUIRED.

Plotted Date: 8/10/2015

DESIGNER/DRAFTER: WAF

CHECKED BY: MS

SCALE AS NOTED

STATE OF CONNECTICUT
DEPARTMENT OF TRANSPORTATION

Filename: $FILEA$

SIGNATURE/ BLOCK:

STATE OF CONNECTICUT · BRIAN P. MALENICA · No. 21640 · LICENSED PROFESSIONAL ENGINEER

PROJECT TITLE:
FARMINGTON AND WATERBURY MAINTENANCE FACILITIES TANK REPLACEMENT

TOWN: **FARMINGTON AND WATERBURY**

DRAWING TITLE: **ELECTRICAL DETAILS**

PROJECT NO. **174-388**

DRAWING NO. **DET1**

SHEET NO. **07.15**