04 - STRUCTURAL
INDEX OF DRAWINGS

DRAWING NUMBER	DRAWING TITLE	DRAWING NUMBER	DRAWING TITLE
S-001	INDEX OF DRAWINGS		
S-002	CANTERBURY CONCRETE REPAIR		
S-003	OLD SAYBROOK CONCRETE REPAIR		
S-004	TYPICAL DETAILS		

THE DESIGN APPEARS TO CONFORM TO APPLICABLE CRITERIA. APPROVAL IS NOT TO BE CONSTRUED TO MEAN THAT ALL ASPECTS OF THE DESIGN HAVE BEEN PERSONALLY CHECKED BY THE UNDERSIGNED.

Gregory Dorosh, P.E.
2015.09.08
09:32:29-04'00'

TRANSPORTATION PRINCIPAL ENGINEER

REV.	DATE	REVISION DESCRIPTION	SHEET NO.

THE INFORMATION, INCLUDING ESTIMATED QUANTITIES OF WORK, SHOWN ON THESE SHEETS IS BASED ON LIMITED INVESTIGATIONS BY THE STATE AND IS IN NO WAY WARRANTED TO INDICATE THE CONDITIONS OF ACTUAL QUANTITIES OF WORK WHICH WILL BE REQUIRED.

Plotted Date: 9/3/2015

DESIGNER/DRAFTER: RPL/DCS
CHECKED BY: RPL
SCALE AS NOTED

STATE OF CONNECTICUT
DEPARTMENT OF TRANSPORTATION

Filename: ...\FD_MST_STR_0172_0439_S001.dgn

SIGNATURE/BLOCK: OFFICE OF ENGINEERING
APPROVED BY:

PROJECT TITLE: THE REHABILITATION OF THE SALT SHEDS

TOWN: CANTERBURY, OLD SAYBROOK PLAINFIELD, VOLUNTOWN

DRAWING TITLE: INDEX OF DRAWINGS

PROJECT NO. 172-439
DRAWING NO. S-001
SHEET NO. 04.01

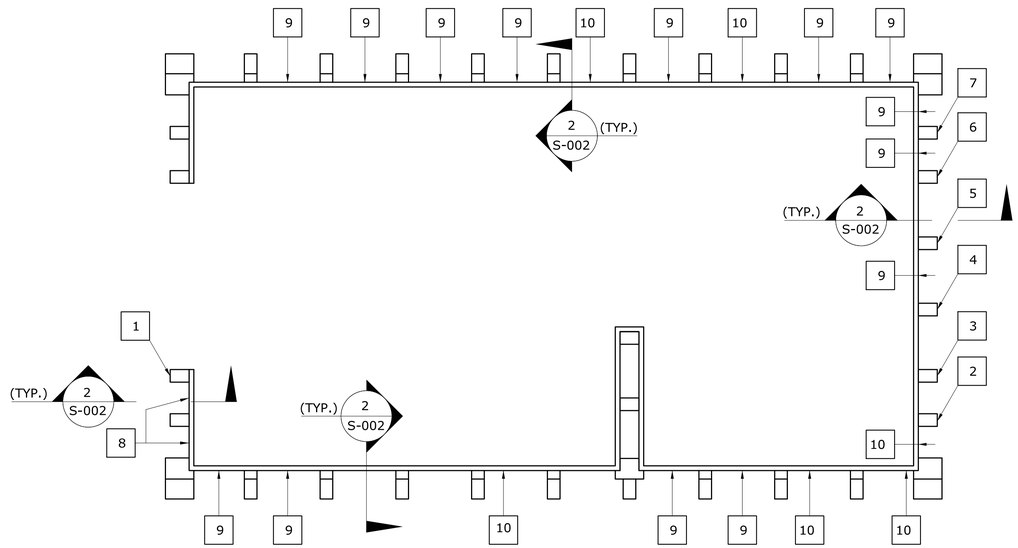

PLAN 1 / S-002

SCALE: 1/8" = 1'-0"

**LEGEND - REPAIR OF CONCRETE PIERS AND CURB WALL

1. SEVERE CRACKS, 1/4" TO 1/2" WIDE AT THE BOTTOM FRONT AND LEFT FACES OF PIER, VERTICALLY FOR APPROX. TOTAL LENGTH OF 30". REPAIR PER ITEM #0601196A.
2. CRACKS 1/4" WIDE (MAX.) AT THE TOP FRONT AND LEFT FACES OF PIER, VERTICALLY AND HORIZONTALLY FOR APPROX. TOTAL LENGTH OF 24". REPAIR PER ITEM #0601196A.
3. CRACKS 1/4" WIDE (MAX.) AT THE TOP LEFT FACE OF PIER, VERTICALLY AND HORIZONTALLY FOR APPROX. TOTAL LENGTH OF 30". REPAIR PER ITEM #0601196A.
4. SEVERE CRACKS AND SPALLING AT THE TOP 24" LENGTH OF PIER ON ALL SIDES. REPAIR PER ITEM #0601073A.
5. SEVERE CRACKS AND SPALLING AT THE TOP 30" LENGTH OF PIER ON THE FRONT AND LEFT FACES. REPAIR PER ITEM #0601073A.
6. CRACKS 1/4" WIDE (MAX.) APPROX. 24" LONG AT THE FRONT FACE OF PIER. SPALLING ON THE TOP 2 SQ. FEET PORTION AT THE RIGHT FACE OF PIER. REPAIR PER ITEM #0601196A.
7. CRACKS 1/4" WIDE (MAX.) AT THE TOP FRONT AND LEFT FACES OF PIER, VERTICALLY FOR APPROX. TOTAL LENGTH OF 30". REPAIR PER ITEM #0601196A.
8. CRACKS AND HONEY-COMBING FOR THE ENTIRE EXPOSED DEPTH OF CURB WALL AND EXTENDING FROM PIER TO PIER. REPAIR PER ITEM #0601196A.
9. RANDOM CRACKS AND SPALLING HORIZONTALLY ON THE CURB WALL FOR THE ENTIRE LENGTH FROM PIER TO PIER. REPAIR PER ITEM #0601196A.
10. RANDOM CRACKS AND SPALLING HORIZONTALLY ON THE CURB WALL FOR APPROX. TOTAL LENGTH OF 48" IN BETWEEN PIERS. REPAIR PER ITEM #0601196A.

**NOTE: THE LENGHTS OF CRACKS GIVEN IN THE LEGEND ARE APPROXIMATE. THE CONTRACTOR MUST VERIFY THE LIMITS, NATURE AND/OR DIRECTION OF CRACKS. THE TYPES OF CONCRETE REPAIR PRESENTED IN THE LEGEND SHALL SERVE AS A GENERAL GUIDE ONLY BASED UPON PRELIMINARY INSPECTION OF THE CONDITION OF DETERIORATION. THE CONTRACTOR MUST NOTIFY THE ENGINEER FOR OTHER TYPES AND/OR LOCATIONS OF DETERIORATION THAT ARE DISCOVERED DURING CONSTRUCTION.

REINFORCING BARS: FY = 60 KSI.

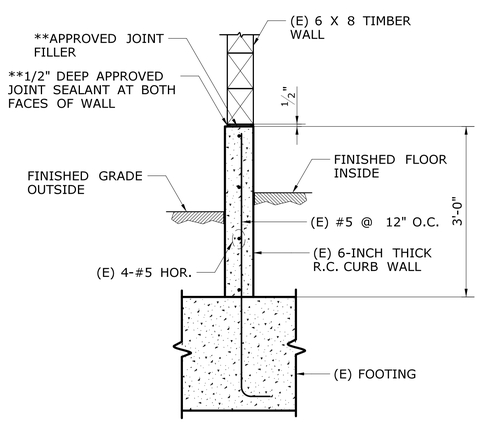

**NOTE: THE JOINT FILLER AND SEALANT ARE TO BE INSTALLED AS NEEDED, AFTER THE REPAIR OF THE CONCRETE CURB WALL.

SECTION AT CURB WALL (TYP.) 2 / S-002

SCALE: 3/4" = 1'-0"

REV.	DATE	REVISION DESCRIPTION	SHEET NO.

THE INFORMATION, INCLUDING ESTIMATED QUANTITIES OF WORK, SHOWN ON THESE SHEETS IS BASED ON LIMITED INVESTIGATIONS BY THE STATE AND IS IN NO WAY WARRANTED TO INDICATE THE CONDITIONS OF ACTUAL QUANTITIES OF WORK WHICH WILL BE REQUIRED.

Plotted Date: 9/3/2015

DESIGNER/DRAFTER: RPL/DCS
CHECKED BY: RPL
SCALE AS NOTED

STATE OF CONNECTICUT
DEPARTMENT OF TRANSPORTATION

Filename: ...\FD_MST_STR_0172_0439_S002.dgn

SIGNATURE/BLOCK:
OFFICE OF ENGINEERING
APPROVED BY:

PROJECT TITLE:
THE REHABILITATION OF THE SALT SHEDS

TOWN:
CANTERBURY, OLD SAYBROOK
PLAINFIELD, VOLUNTOWN

DRAWING TITLE:
CANTERBURY CONCRETE REPAIR

PROJECT NO. 172-439
DRAWING NO. S-002
SHEET NO. 04.02

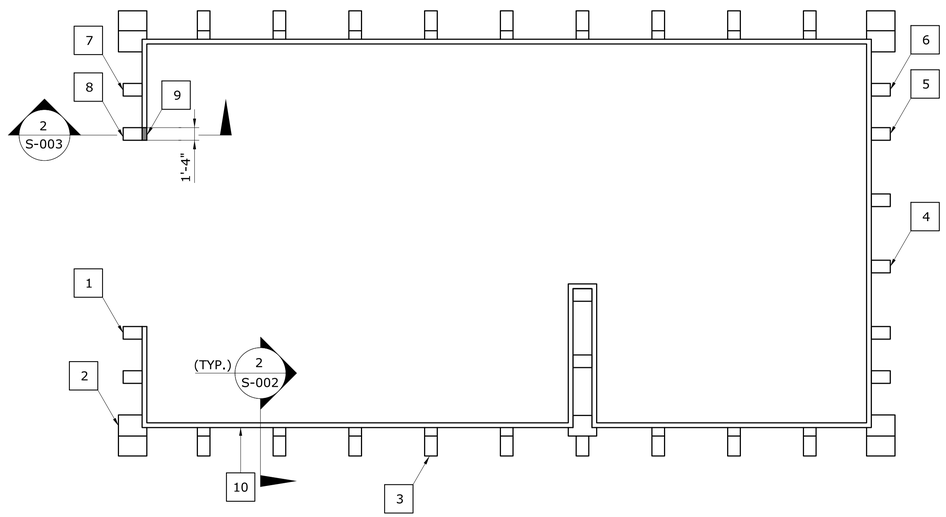

PLAN
SCALE: 1/8" = 1'-0"

1
S-003

**LEGEND - REPAIR OF CONCRETE PIERS AND CURB WALL

1. SEVERE CRACKS, DETERIORATION AND LOSS OF CONCRETE SECTION AT THE BOTTOM 48" PORTION ON THE FRONT AND LEFT FACES OF PIER, EXPOSING CORRODED REBARS. REPAIR PER ITEM #0601073A.
2. CRACKS 1/4" WIDE (MAX.) AT THE LEFT FACE OF PIER WHERE OLD REPAIR IS APPARENT TO HAVE BEEN PERFORMED. CRACKS RUN VERTICALLY FOR APPROX. LENGTH OF 40". REPAIR PER ITEM #0601196A.
3. CRACKS 1/4" WIDE (MAX.) AT THE BOTTOM LEFT FACE OF PIER WHERE OLD REPAIR IS APPARENT TO HAVE BEEN PERFORMED. CRACKS RUN VERTICALLY FOR APPROX. LENGTH OF 24". REPAIR PER ITEM #0601196A.
4. CRACKS 1/4" WIDE (MAX.) AT THE BOTTOM LEFT AND RIGHT FACES OF PIER FOR APPROX. TOTAL LENGTH OF 60". REPAIR PER ITEM #0601196A.
5. CRACKS 1/4" WIDE (MAX.) AT THE BOTTOM LEFT FACE OF PIER AND AT VARIOUS LOCATIONS AT THE RIGHT FACE OF PIER FOR APPROX. TOTAL OF 108". REPAIR PER ITEM #0601196A.
6. CRACKS 1/8" WIDE (MAX.) AT THE TOP FRONT FACE OF PIER FOR APPROX. LENGTH OF 30". REPAIR PER ITEM #0601196A.
7. CRACKS 1/4" WIDE (MAX.) AND SPALLING AT THE BOTTOM RIGHT FACE OF PIER FOR APPROX. LENGTH OF 30". REPAIR PER ITEM #0601196A.
8. CRACKS 1/8" WIDE (MAX.) AT THE BOTTOM FRONT FACE OF PIER FOR APPROX. TOTAL LENGTH OF 36". REPAIR PER ITEM #0601196A.
9. SEVERE DAMAGE AND DETERIORATION OF THE ENTIRE EXPOSED SEGMENT OF THE CURB WALL ABOVE THE FINISHED GRADE. REMOVE THE ENTIRE DAMAGED SEGMENT OF THE CURB WALL AND RECONSTRUCT.
10. VERTICAL CRACK 1/4" WIDE AND APPROX. 24" LONG AT AROUND THE MID-SPAN OF THE CURB WALL. REPAIR PER ITEM #0601196A.

**NOTE: THE LENGHTS OF CRACKS GIVEN IN THE LEGEND ARE APPROXIMATE. THE CONTRACTOR MUST VERIFY THE LIMITS, NATURE AND/OR DIRECTION OF CRACKS. THE TYPES OF CONCRETE REPAIR PRESENTED IN THE LEGEND SHALL SERVE AS A GENERAL GUIDE ONLY BASED UPON PRELIMINARY INSPECTION OF THE CONDITION OF DETERIORATION. THE CONTRACTOR MUST NOTIFY THE ENGINEER FOR OTHER TYPES AND/OR LOCATIONS OF DETERIORATION THAT ARE DISCOVERED DURING CONSTRUCTION.

REINFORCING BARS: FY = 60 KSI.

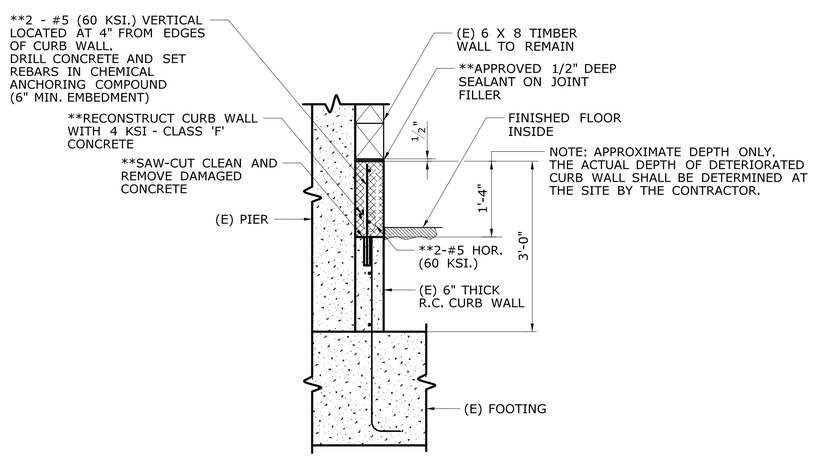

**NOTE: THE PRICE FOR ALL THE WORKS, MATERIALS, LABOR, EQUIPMENTS AND OTHER INCIDENTALS FOR THE RECONSTRUCTION OF THE CURB WALL SHOWN IN THIS DETAIL SHALL BE INCLUDED IN THE PRICE FOR THE ITEM "CAST-IN-PLACE CONCRETE".

CURB WALL RECONSTRUCTION
SCALE: 3/4" = 1'-0"

2
S-003

REV.	DATE	REVISION DESCRIPTION	SHEET NO.

THE INFORMATION, INCLUDING ESTIMATED QUANTITIES OF WORK, SHOWN ON THESE SHEETS IS BASED ON LIMITED INVESTIGATIONS BY THE STATE AND IS IN NO WAY WARRANTED TO INDICATE THE CONDITIONS OF ACTUAL QUANTITIES OF WORK WHICH WILL BE REQUIRED.

Plotted Date: 9/3/2015

DESIGNER/DRAFTER: RPL/DCS
CHECKED BY: RPL
SCALE AS NOTED

STATE OF CONNECTICUT
DEPARTMENT OF TRANSPORTATION

Filename: ...\FD_MST_STR_0172_0439_S003.dgn

SIGNATURE/BLOCK:
OFFICE OF ENGINEERING
APPROVED BY:

PROJECT TITLE:
THE REHABILITATION OF THE SALT SHEDS

TOWN:
CANTERBURY, OLD SAYBROOK
PLAINFIELD, VOLUNTOWN

DRAWING TITLE:
OLD SAYBROOK CONCRETE REPAIR

PROJECT NO. 172-439
DRAWING NO. S-003
SHEET NO. 04.03

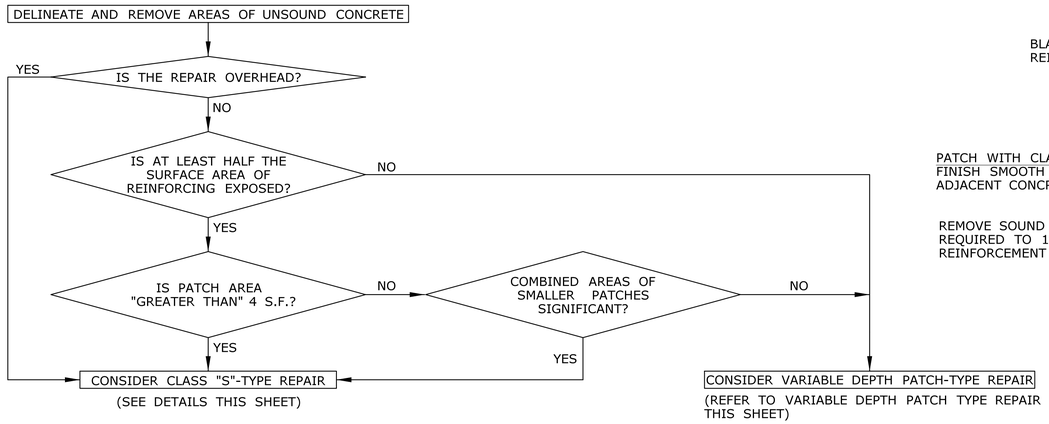

FLOWCHART TO DETERMINE TYPE OF CONCRETE REPAIR

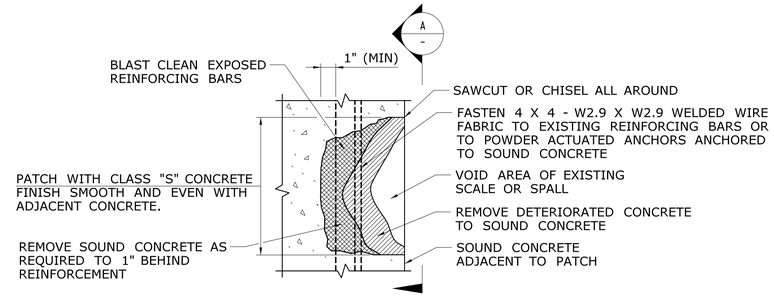

CLASS "S" CONCRETE

NOT TO SCALE

GENERAL

THE ENGINEER WILL DETERMINE THE LOCATIONS OF UNSOUND OR DETERIORATED CONCRETE TO BE REPAIRED. THE METHOD USED TO DELINEATE AREAS OF CONCRETE TO BE REPAIRED SHALL NOT PERMANENTLY MARK THE CONCRETE, LEAVE ANY RESIDUE AFTER REMOVAL, OR REQUIRE HARSH CHEMICALS TO REMOVE.

THE CONTRACTOR SHALL REMOVE THE DETERIORATED CONCRETE IN ACCORDANCE WITH THE GUIDELINES SET IN THESE NOTES AND IN THE SPECIAL PROVISIONS AND THE ENGINEER WILL DETERMINE THE TYPE OF REPAIR REQUIRED FOR EACH AREA USING THE FLOWCHART ON THIS SHEET AS A GUIDELINE FOR REPAIR TYPES.

CLASS "S" CONCRETE

THIS TYPE OF REPAIR SHALL BE USED WHERE THE REINFORCING BARS ARE SUFFICENTLY EXPOSED TO ENGAGE AND ANCHOR THE PATCHING MATERIAL. CLASS "S" CONCRETE MAY BE USED FOR SMALLER AREAS LESS THAN FOUR SQUARE FEET WHERE THERE IS A SUFFICIENT TOTAL AREA TO JUSTIFY THE USE OF THIS MATERIAL AND WHERE THE PATCH CAN BE SECURELY ANCHORED BY THE REINFORCING.

BEFORE APPLYING THE PATCHING MATERIAL, THE REINFORCING BARS SHALL BE BLAST-CLEANED.

REINFORCING BAR REPAIRS

REINFORCING WHICH IS DETERMINED BY THE ENGINEER TO BE IN NEED OF REPLACEMENT, SHALL BE REMOVED TO A POINT WHERE IT IS SOUND. THE PATCH SHALL EXTEND A SUFFICIENT DISTANCE BEYOND THIS POINT TO DEVELOP A SPLICE LENGTH SPECIFIED IN THE TABLE ON THIS SHEET.

RESTRICTIONS

THE REMOVAL OF DETERIORATED CONCRETE SHALL PROCEED AS DIRECTED BY THE ENGINEER. IF THE REMOVAL OF DETERIORATED CONCRETE BECOMES EXCESSIVE, THE REMOVAL WORK SHALL BE STOPPED AT THAT LOCATION AND THE ENGINEER NOTIFIED IMMEDIATELY.

MAXIMUM HAMMER SIZE USED TO REMOVE DETERIORATED CONCRETE SHALL BE 15 POUNDS.

IF REMOVAL EXTENDS MORE THAN $1\frac{1}{2}$" BEHIND THE MAIN REINFORCING BARS, THE REMOVAL WORK SHALL BE STOPPED AND THE ENGINEER NOTIFIED IMMEDIATELY.

IF THE AREA OR DEPTH OF REMOVAL IS DEEMED TO BE EXCESSIVE, THE ENGINEER SHALL BE IMMEDIATELY NOTIFIED BEFORE CONTINUING REMOVAL WORK.

PAY ITEM NOTES

1. THE 1" DEEP SAW-CUT SHALL BE INCLUDED IN THE CONTRACT BID PRICE OF THE APPLICABLE REPAIR PAY ITEM.
2. REINFORCING BARS SHALL BE INCLUDED IN THE CONTRACT BID PRICE OF THE APPLICABLE REPAIR PAY ITEM.

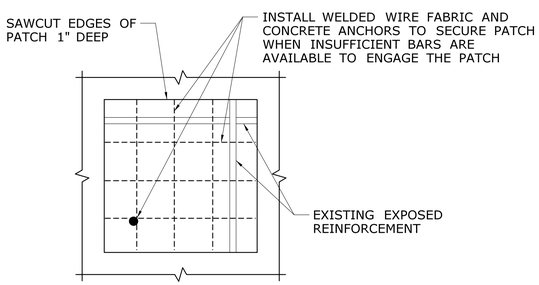

SECURING PATCH WITH WELDED WIRE FABRIC

NOT TO SCALE

A
-

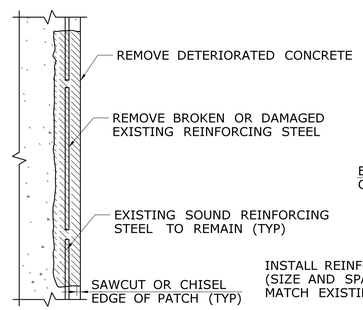

TYPICAL SECTION DAMAGED REINFORCING

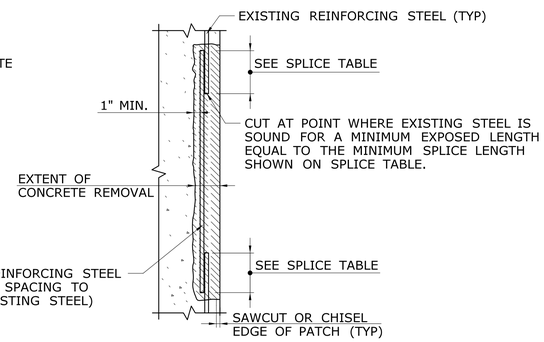

TYPICAL SPLICE DETAIL

REINFORCING REPAIR DETAIL

NOT TO SCALE

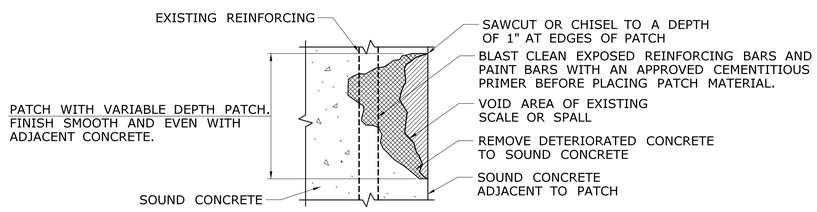

VARIABLE DEPTH PATCH TYPE REPAIR (REINFORCING PARTIALLY EXPOSED)

NOT TO SCALE

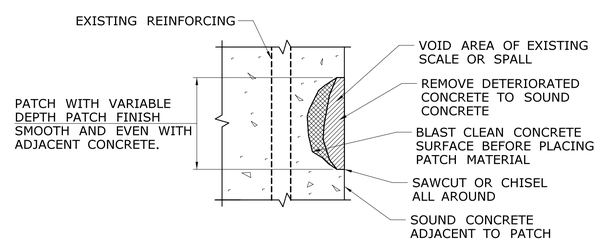

VARIABLE DEPTH PATCH TYPE REPAIR (NO REINFORCING EXPOSED)

NOT TO SCALE

TABLE OF SPLICE LENGTHS

	BAR SIZE	MIN. SPLICE LENGTH
REINFORCEMENT SPACING @ ≥ 6" O.C. **	#4	1'-4"
	#5	1'-4"
	#6	1'-9"
	#7	2'-4"
	#8	3'-0"

** FOR BARS SPACED "LESS THAN" 6" O.C. MULTIPLY TABLE VALUES BY 1.25

REV.	DATE	REVISION DESCRIPTION	SHEET NO.

THE INFORMATION, INCLUDING ESTIMATED QUANTITIES OF WORK, SHOWN ON THESE SHEETS IS BASED ON LIMITED INVESTIGATIONS BY THE STATE AND IS IN NO WAY WARRANTED TO INDICATE THE CONDITIONS OF ACTUAL QUANTITIES OF WORK WHICH WILL BE REQUIRED.

Plotted Date: 9/3/2015

DESIGNER/DRAFTER: RPL/DCS
CHECKED BY: RPL
SCALE AS NOTED

STATE OF CONNECTICUT
DEPARTMENT OF TRANSPORTATION

Filename: ...\FD_MST_STR_0172_0439_S004.dgn

SIGNATURE/BLOCK: OFFICE OF ENGINEERING
APPROVED BY:

PROJECT TITLE: THE REHABILITATION OF THE SALT SHEDS

TOWN: CANTERBURY, OLD SAYBROOK PLAINFIELD, VOLUNTOWN

DRAWING TITLE: TYPICAL DETAILS

PROJECT NO. 172-439
DRAWING NO. S-004
SHEET NO. 04.04