TABLE OF CONTENTS OF SPECIAL PROVISIONS

Note: This Table of Contents has been prepared for the convenience of those using this contract with the sole express purpose of locating quickly the information contained herein; and no claims shall arise due to omissions, additions, deletions, etc., as this Table of Contents shall not be considered part of the contract.

Table of Contents

CONTRACT TIME AND LIQUIDATED DAMAGES 4
NOTICE TO CONTRACTOR - PERMITTED CLOSURE OF ROUTE 99 5
INCENTIVE/DISINCENTIVE PAYMENTS 5
NOTICE TO CONTRACTOR - PRE-BID QUESTIONS AND ANSWERS 8
NOTICE TO CONTRACTOR - CONTRACT DURATION 9
NOTICE TO CONTRACTOR - NOTIFY OF ROAD CLOSURE 10
NOTICE TO CONTRACTOR - DETOUR 11
NOTICE TO CONTRACTOR - TEMPORARY EARTH RETAINING 12
SYSTEM LEFT IN PLACE 12
NOTICE TO CONTRACTOR - SALVAGE 13
NOTICE TO CONTRACTOR - HAZARDOUS MATERIALS 14
INVESTIGATIONS 14
NOTICE TO CONTRACTOR - SECTION 4.06 AND M.04 MIX 16
DESIGNATION EQUIVALENCY AND PG BINDER EQUIVALENCY 16
NOTICE TO CONTRACTOR - SUPERPAVE DESIGN LEVEL INFORMATION 19
NOTICE TO CONTRACTOR - GLOBAL POSITIONING SYSTEM (GPS) 20
COORDINATES FOR SIGNS 20
SECTION 1.02 - PROPOSAL REQUIREMENTS AND CONDITIONS 21
SECTION 1.05 - CONTROL OF THE WORK 22
SECTION 1.07 - LEGAL RELATIONS AND RESPONSIBILITIES 53
SECTION 1.08 - PROSECUTION AND PROGRESS 55
SECTION 1.10 - ENVIRONMENTAL COMPLIANCE 56
SECTION 4.06 - BITUMINOUS CONCRETE 58
SECTION 5.03 - REMOVAL OF AND ALTERATIONS TO EXISTING 82
BRIDGES 82
SECTION 12.00 - GENERAL CLAUSES FOR HIGHWAY SIGNING 84
SECTION M.04 - BITUMINOUS CONCRETE 87
ON-THE-JOB TRAINING (OJT) WORKFORCE DEVELOPMENT PILOT 117
SMALL CONTRACTOR AND SMALL CONTRACTOR MINORITY 121
BUSINESS ENTERPRISES (SET-ASIDE) 121
ITEM #0020903A - LEAD COMPLIANCE FOR MISCELLANEOUS 132
EXTERIOR TASKS 132
ITEM #0108100A - LUMP SUM INCENTIVE PAYMENT (ESTIMATED COST) 148
ITEM #0201013A - REMOVAL OF EXISTING FENCE 149
ITEM #0202216A - EXCAVATION AND REUSE OF EXISTING CHANNEL 150
BOTTOM MATERIAL 150
ITEM #0202452A - TEST PIT 153
ITEM #0204151A - HANDLING WATER 155
ITEM #0213000A - GRAVEL FILL 157
ITEM #216011A - FLOWABLE FILL 158
ITEM #0406275A - FINE MILLING OF BITUMINOUS CONCRETE (0 TO 159
4 INCHES) 159
ITEM #0601091A - SIMULATED STONE MASONRY 163
ITEM #0601109A - PRECAST CONCRETE WALLS 169
ITEM #0601464A - 18’ X 6’-6” PRECAST CONCRETE BOX CULVERT 176
ITEM #0602910A - DRILLING HOLES AND GROUTING DOWELS 190
ITEM #0703030A - PLACEMENT OF CHANNEL BOULDER 192
ITEM #0707009A - MEMBRANE WATERPROOFING (COLD LIQUID 194
ELASTOMERIC) 194
ITEM #0714050A - TEMPORARY EARTH RETAINING SYSTEM 202
ITEM #0715050A - EARTH RETAINING SYSTEM LEFT IN PLACE 204
ITEM #0913952A - PROTECTIVE FENCE (5’ HIGH) 205

ITEM #0949160A - SPECIAL SOIL PREPARATION 208
ITEM #0950019A - TURF ESTABLISHMENT - LAWN 209
ITEM #0950040A - CONSERVATION SEEDING FOR SLOPES.....210
ITEM #0952051A - CONTROLAND REMOVAL OF INVASIVE VEGETATION 211
ITEM #0969060A - CONSTRUCTION FIELD OFFICE, SMALL.....216
ITEM #0970006A - TRAFFICPERSON (MUNICIPAL POLICE OFFICER) 224
ITEM #0970007A - TRAFFICPERSON (UNIFORMED FLAGGER) 224
ITEM #0971001A - MAINTENANCE AND PROTECTION OF TRAFFIC 227
ITEM #1131002A - REMOTE CONTROLLED CHANGEABLE MESSAGE 245
SIGN 245
ITEM #1210101A - 4” (100 mm) WHITE EPOXY RESIN PAVEMENT 248
MARKINGS.....248
ITEM #1210102A - 4” (100 mm) YELLOW EPOXY RESIN PAVEMENT 248
MARKINGS.....248
ITEM #1301083A - 10” DUCTILE IRON PIPE (WATER MAIN) 250
ITEM #1507000A - PROTECTION AND SUPPORT OF EXISTING UTILITIES.....270
PERMITS AND/OR PERMIT APPLICATIONS 271
PERMITS AND/OR SUPPLEMENTAL TO FORM 816 AND REQUIRED PROVISIONS.....317

NOVEMBER 18, 2015
FEDERAL AID PROJECT NO. N/A
STATE PROJECT NO. 118-166

REPLACEMENT OF BRIDGE NOS. 02102 AND 04179
CARRYING ROUTE 99 OVER HOG BROOK

Town of Rocky Hill
Federal Aid Project No. N/A

The State of Connecticut, Department of Transportation, Standard Specifications for Roads, Bridges and Incidental Construction, Form 816, 2004, as revised by the Supplemental Specifications dated July 2015 (otherwise referred to collectively as "ConnDOT Form 816") is hereby made part of this contract, as modified by the Special Provisions contained herein. The State of Connecticut Department of Transportation's "Construction Contract Bidding and Award Manual" ("Manual"), May 14, 2010 edition or latest issue, is hereby made part of this contract. If the provisions of this Manual conflict with provisions of other Department documents (not including statutes or regulations), the provisions of the Manual will govern. The Manual is available upon request from the Transportation Manager of Contracts. The Special Provisions relate in particular to the Replacement of Bridge Nos. 02102 and 04179 Carrying Route 99 Over Hog Brook in the Town of Rocky Hill.

CONTRACT TIME AND LIQUIDATED DAMAGES

One Hundred Twenty Six (126) calendar days will be allowed for completion of the work on this project and the liquidated damages charge to apply will be Two Thousand Dollars ($2,000.00) per calendar day.

NOTICE TO CONTRACTOR - PERMITTED CLOSURE OF ROUTE 99 INCENTIVE/DISINCENTIVE PAYMENTS

Time is of the essence in constructing the replacement structure and opening the entire roadway to traffic. In order to reduce hazards, costs, disturbance to the local environment and businesses, and inconvenience to the traveling public, it is necessary to complete the work in accordance with the requirements found in the contract specifications.

The Contractor will be allowed to close Route 99 (Main Street) and detour traffic for a duration that shall not exceed 7 consecutive days (168 consecutive hours) between August 10, 2016 and August 31, 2015 in accordance with the contract documents. In no circumstances the closure shall take place prior to the end of the 2016 Travelers Championship Golf Tournament, which is currently planned to be held from August 1 to August 7, 2016 in Cromwell, CT.

Incentive: If the roadway is opened to traffic, after being closed, in less than 7 days (168 hours), the Contractor shall receive an incentive payment based on a rate of $10,000 per 24 hours, prorated, for every hour that the roadway is opened to traffic before reaching the maximum allowable roadway closure time of 168 hours. The maximum incentive payment that the Contractor may receive is $40,000.

The incentive payment shall be determined as follows:

$$\text{Incentive Payment} = (t_{max} - t_{actual}) \times \text{Rate}_{incentive}$$

where,

t_{max} = maximum allowable roadway closure time in hours = 168 hours
t_{actual} = actual number of hours roadway is closed to traffic, rounded up to the nearest whole hour
$\text{Rate}_{incentive}$ = $10,000 / 24 hours

Example:

If the roadway is closed to traffic on Friday, August 12, 2016 at 7:00 pm and re-opened to traffic on Wednesday, August 17, 2016 at 5:45 pm, the incentive payment is based on the roadway being closed to traffic for 119 hours (the actual number of hours the roadway is closed to traffic, 118 hrs, 45 minutes, round up to 119 hours).

Incentive Payment = (168 hours – 119 hours) x ($10,000 / 24 hours)
= $20,416.67

Disincentive: The Contractor shall be assessed a disincentive payment based on a rate of $15,000 per 24 hours, prorated, that the roadway remains closed and the traffic remains detoured in excess of 7 days (168 hours).

The disincentive payment shall be determined as follows:

$$\text{Disincentive Payment} = (t_{actual} - t_{max}) \times \text{Rate}_{disincentive}$$

where,

t_{max} = maximum allowable roadway closure time in hours = 168 hours
t_{actual} = actual number of hours roadway is closed to traffic, rounded up to the nearest whole hour
$\text{Rate}_{disincentive}$ = $15,000 / 24 hours

Example:

If the roadway is closed to traffic on Friday, August 12, 2016 at 7:00 pm and re-opened to traffic on Sunday, August 21, 2016 at 9:15 am, the disincentive payment is based on the roadway being closed to traffic for 207 hours (the actual number of hours the roadway is closed to traffic, 206 hrs, 15 minutes, round up to 207 hours).

Disincentive Payment = (207 hours – 168 hours) x ($15,000 / 24 hours)
= $24,375.00

The roadway may only be opened to traffic once the following work has been completed and accepted by the Engineer:

- Installation of intermediate riprap at inlet
- Installation of standard riprap and boulders at outlet
- Removal of temporary water handling system (pumps, cofferdam, pipes etc.) and establishment of flow through culvert
- Placement of the top course of pavement full width of the roadway within the limits of construction shown on the plans
- Installation of all metal beam rail and anchorages shown on the plans
- Installation of protective fence
- Painting of temporary line striping

The Engineer will be the sole authority determining when work is completed or when traffic is impeded.

The Engineer will deduct the amount of the disincentive as it accrues. Should the amount of disincentive exceed the amount due for retainage and work performed but not paid for, the Contractor shall submit a check to the Department for the amount of the difference. This check shall be submitted to the Department within 30 calendar days of notice that payment is due.

The incentive/disincentive phase of the project does not negate the Contractor from compliance with the other provisions found in the contract specifications, including Liquidity Damages.

The Contractor shall not be granted any extensions of time beyond those specified in the contract for opening the roadway to traffic resulting from delays by suppliers. It is the Contractor's responsibility to insure the procurement of all equipment and materials by the dates they are required for completion of the work within the established schedule.

NOTICE TO CONTRACTOR - PRE-BID QUESTIONS AND ANSWERS

Questions pertaining to DOT advertised construction projects must be presented through the CTDOT Pre-Bid Q and A Website. The Department cannot guarantee that all questions will be answered prior to the bid date. **PLEASE NOTE - at 12:01 am, the day before the bid, the subject project(s) being bid will be removed from the Q and A Website, Projects Advertised Section, at which time questions can no longer be submitted through the Q and A Website. At this time, the Q and A for those projects will be considered final, unless otherwise stated and/or the bid is postponed to a future date and time to allow for further questions and answers to be posted.**

If a question needs to be asked the day before the bid date, please contact the Contracts Unit staff and email your question to dotcontracts@ct.gov immediately.

Contractors must identify their company name, contact person, contact email address and phone number when asking a question. The email address and phone number will not be made public.

The questions and answers (if any) located on the Q and A Website are hereby made part of the bid/contract solicitation documents (located on the State Contracting Portal), and resulting contract for the subject project(s). It is the bidder's responsibility to monitor, review, and become familiar with the questions and answers, as with all bid requirements and contract documents, prior to bidding. By signing the bid proposal and resulting contract, the bidder acknowledges receipt of, and agrees to the incorporation of the final list of Q and A, into the contract document.

Contractors will not be permitted to file a future claim based on lack of receipt, or knowledge of the questions and answers associated with a project. All bidding requirements and project information, including but not limited to contract plans, specifications, addenda, Q and A, Notice to Contractors, etc., are made public on the State Contracting Portal and/or the CTDOT website.

NOTICE TO CONTRACTOR - CONTRACT DURATION

The Contractor is hereby notified that this is not to be considered an ordinary project by any means and that due to the inconvenience to the traveling public that it causes, extra manpower, equipment and work shifts may be required to complete the work in accordance within the specified contract time.

NOTICE TO CONTRACTOR - NOTIFY OF ROAD CLOSURE

The Contractor shall notify the following parties of the detailed schedule of Route 99 closure at least one month in advance of the closure:

1. Rocky Hill Town Council, attention to Mr. Stephen Sopelak, P.E., Project Engineer.
2. Residents of:

   Westage Condominiums
   73 Carillon Drive
   Rocky Hill, CT 06067

NOTICE TO CONTRACTOR - DETOUR

The Contractor may close Route 99 (Main Street) in the vicinity of Hog Brook to all traffic during the reconstruction of bridges 02102 and 04179 as approved by the Engineer and as stated in the special provisions. A detour shall be implemented as specified in the Contract plans and special provisions. The duration of the road closure shall not exceed seven consecutive days.

Once the road is re-opened for traffic, the Contractor will not be allowed to re-close the road and detour traffic.

Route 99 will not be allowed to be closed at any point during the week of the Travelers Championship golf tournament.

The Contractor shall notify the Engineer, District 1 Construction, the Division of Traffic Engineering, ConnDOT Highway Operations, CT Transit, the Town of Rocky Hill, all emergency services, and the Connecticut State Veterans' Home in Rocky Hill at least two weeks prior to closing the roadway. CT Transit shall be notified that Bus Route 55 will be directly impacted by the road closure.

NOTICE TO CONTRACTOR - TEMPORARY EARTH RETAINING SYSTEM LEFT IN PLACE

The Contractor shall be notified that the Temporary Earth Retaining System (TERS) within the limits shown on the contract plans is intended to be left in place entirely. Payment for the left in place TERS is included in the payment of Item “Earth Retaining System Left In Place.”

NOTICE TO CONTRACTOR - SALVAGE

The Contractor shall salvage the following items for the State:

- Metal Beam Rail found in good, reusable condition.
- Temporary Retaining System currently supporting the concrete headwalls of Bridge No. 02102.

Elements in good, reusable condition shall be banded. (Elements will not be accepted if not properly banded.) Elements with damage will not be accepted.

The State Inspector responsible for this project shall determine the condition of the materials.

The salvaged Metal Beam Rail shall be delivered by the Contractor to CTDOT Tylerville Storage Facility, 860-345-2258.

The salvaged retaining system shall be delivered by the Contractor to Eric Belanger, CTDOT Hartford Bridge Maintenance, 860-566-3102.

The salvaged material shall be loaded, transported and unloaded by the Contractor. All material shall be stacked and stored by the Contractor according to the direction of the General Supervisor or his/her representative.

The Contractor shall not receive direct payment for this work. The cost of dismantling, sorting, banding, loading, transporting and unloading the items designated for salvage shall be included in the general cost of the work for the project.

NOTICE TO CONTRACTOR - HAZARDOUS MATERIALS INVESTIGATIONS

A limited hazardous materials site investigation has been conducted at Bridge No. 02102 and Bridge No. 04179 (pedestrian bridge), Route 99 over Hog Brook in Rocky Hill, Connecticut. The scope of inspection was limited to the representative components projected for impact.

The results of the investigation indicated the presence of lead based paint (LBP) on the structural steel/metal bridge components of the pedestrian bridge, Bridge No. 04179. No painted metal or concrete bridge surfaces were identified on Bridge No. 02102 and therefore no LBP is present.

Results obtained from TCLP waste stream sampling and analysis for leachable lead in the paint associated with the metal/structural steel, characterized the paint waste stream at Bridge No. 04179 as **RCRA hazardous waste (>5.0mg/l)**.

All steel and metal generated from work tasks (painted or not) shall be segregated and recycled as scrap metal at a scrap metal recycling facility. The recycling of scrap metal (regardless of lead paint concentration) is exempt from USEPA RCRA and CTDEEP Hazardous Waste Regulation.

No suspect asbestos containing materials were identified in the accessible areas of both bridges.

No bird guano accumulations were observed in the accessible areas of both bridges.

The Contractor is hereby notified that these hazardous materials requiring special management or disposal procedures will be encountered during various construction activities conducted within the project limits. The Contractor will be required to implement appropriate health and safety measures for all construction activities impacting these materials. These measures shall include, but are not limited to, air monitoring, engineering controls, personal protective equipment and decontamination, equipment decontamination and personnel training. WORKER HEALTH AND SAFETY PROTOCOLS WHICH ADDRESS POTENTIAL AND/OR ACTUAL RISK OF EXPOSURE TO SITE SPECIFIC HAZARDS ARE SOLELY THE RESPONSIBILITY OF THE CONTRACTOR.

The Department, as Generator, will provide an authorized representative to sign all manifests and waste profile documentation required by disposal facilities for disposal of hazardous materials.

The Sections which shall be reviewed by the Contractor include, but are not limited to, the following:

- Item No. 0020903A – Lead Compliance for Miscellaneous Exterior Tasks

The Contractor is alerted to the fact that a Department environmental consultant may be on site for abatement and related activities, to collect environmental samples (if necessary), and to observe site conditions for the State.

Information pertaining to the results of the limited hazardous materials investigation discussed can be found in the document listed below. This document shall be available for review at the Office of Contracts, 2800 Berlin Turnpike, Newington, Connecticut.

- HazMat Inspection Letter, Bridge Nos. 02102 & 04179, Route 99 over Hog Brook, Rocky Hill, CT, TRC Environmental Corporation, April 21, 2014.

NOTICE TO CONTRACTOR - SECTION 4.06 AND M.04 MIX DESIGNATION EQUIVALENCY AND PG BINDER EQUIVALENCY

Sections 4.06 and M.04 have been replaced in their entirety with the Special Provisions included as part of this contract. These Special Provisions reflect changes in mix designations for various types of hot-mix asphalt (HMA) and include the removal of mixes designed and governed by the Marshall Mix Design method. The following table is to be used to associate mix designations noted on the plans with those in the contract specifications and related documents. Mix designations on each row are equivalent and refer to a single mix, which shall be subject to the requirements of the Section 4.06 and M.04 Special Provisions for the Official Mix Designation in the leftmost column of the corresponding row in the table.

Mix Designation Equivalency Table

Official Mix Designation	Equivalent Mix Designation (a)	Equivalent Mix Designation (b)
(c)	Superpave 1.5 inch	Superpave 37.5 mm
HMA S1	Superpave 1.0 inch	Superpave 25.0 mm
HMA S0.5	Superpave 0.5 inch	Superpave 12.5 mm
HMA S0.375	Superpave 0.375 inch	Superpave 9.5 mm
HMA S0.25	Superpave 0.25 inch	Superpave 6.25 mm
(c)	Superpave #4	Superpave #4
HMA S0.5 (d)	Bituminous Concrete Class 1 **(e)**	Bituminous Concrete Class 1 **(e)**
HMA S0.375 (d)	Bituminous Concrete Class 2 where it is specified in lifts 1.25 or thicker **(e)**	Bituminous Concrete Class 2 where it is specified in lifts 1.25 or thicker **(e)**
HMA S0.25 (d)	Bituminous Concrete Class 2 where it is specified in lifts 1.0 inches to less than 1.25 inches **(e)**; Bituminous Concrete Class 12 **(e)**	Bituminous Concrete Class 2 where it is specified in lifts 1.0 inches to less than 1.25 inches **(e)**; Bituminous Concrete Class 12 **(e)**
HMA S1 (d)	Bituminous Concrete Class 4 **(e)**	Bituminous Concrete Class 4 **(e)**
Curb Mix	Bituminous Concrete Class 3	Bituminous Concrete Class 3

Notes

(a) This mix designation is generally included with projects where the English measurement system is used. The mix designation may contain both the English measurement system

designation and the SI (metric) measurement system designation, one of which would be in parenthesis.

(b) This mix designation is generally included with projects where the SI (metric) measurement system is used. The mix designation may contain both the English measurement system designation and the SI measurement system designation, one of which would be in parenthesis.

(c) This mix is no longer in use except by contract-specific Special Provision; if this mix is called for in the Plans but no such Special Provision is included for this contract a suitable substitute must be approved by the Engineer.

(d) Unless approved by the Engineer, the Superpave Design Level for the Official Mix Designation bituminous concrete replacing a Marshall mix called for in the plans or other contract documents shall be Design Level 2 for mixes used on mainline or shoulders of state-maintained roadways and Design Level 1 elsewhere, including but not limited to driveways or sidewalks.

(e) All mixes designed under the Marshall mix-design method are no longer covered by the 4.06 Special Provision. Wherever they appear in Contract plans and documents they shall be substituted by the "Official Mix Designation" in the same row of the Mix Designation Equivalency Table. Unless approved by the Engineer, the Superpave Design Level shall be Level 1.

PG Binder Designation Equivalency Table

Official Binder Designation	Equivalent Binder Designation	Use
PG 64S-22	PG 64-22	Hot-Mix Asphalt (HMA S* pay items and pay items using HMA S* materials)**(a),(b)**
PG 64E-22	PG 76-22	Polymer-Modified Asphalt (PMA S* pay items and pay items using HMA S* materials)**(a),(b)**

Notes

(a) Use the Mix Designation Equivalency Table above to identify the Official Mix Designation for materials using the Marshall mix design method, i.e. "Bituminous Concrete Class *."

(b) Refer to the NTC – Superpave Design Level for the Superpave Design Level to use for each mix on a project. The PG Binder Designation Equivalency Table can be used to obtain the Official Binder Designation for each mix identified in the NTC – Superpave Design Level.

NOTICE TO CONTRACTOR - SUPERPAVE DESIGN LEVEL INFORMATION

Hot-Mix Asphalt (HMA) and Polymer-Modified Asphalt (PMA) constructed according to the Superpave mix-design system are required to attain a Superpave Design Level and are required to use a Performance Graded (PG) binder. The Superpave Design Levels required for this project are listed in Table 1. The required PG binder is indicated for each mix with an "X" in the appropriate box in Table 1.

TABLE 1 – Superpave Design Level and Performance Graded (PG) Binder

Mix Designation	**PG Binder**		**Route 99 Rocky Hill**	**Route _____ _____ _____ _____**	**Route _____ _____ _____ _____**	**Route _____ _____ _____ _____**
	PG 64S-22	**PG 64E-22**	**Design Level**	**Design Level**	**Design Level**	**Design Level**
HMA S0.25	-	-	-	-	-	-
HMA S0.375	-	-	-	-	-	-
HMA S0.5	-	-	-	-	-	-
HMA S1	X	-	2	-	-	-
PMA S0.25	-	-	-	-	-	-
PMA S0.375	-	-	-	-	-	-
PMA S0.5	-	X	2	-	-	-
PMA S1	-	-	-	-	-	-

Note: Please note that PMA mix designations typically use PG 64E-22 and HMA mix designations use PG 64S-22

NOTICE TO CONTRACTOR - GLOBAL POSITIONING SYSTEM (GPS) COORDINATES FOR SIGNS

The Contractor shall obtain and provide to the Engineer sign installation data, including Global Positioning System (GPS) latitude and longitude coordinates, for all new signs. The Engineer shall forward the sign data to the Division of Traffic Engineering for upload into the Highway Sign Inventory and Maintenance Management Program (SIMS). Contact Mr. Philip J. Cohen at (860) 594-2744 of the Division of Traffic Engineering regarding any SIMS questions. Contact Mr. James R. Spencer at (860) 594-2014 of the Department's Bureau of Policy and Planning regarding any GPS questions. Refer to the special provision for Section 12.00 General Clauses For Highway Signing.

SECTION 1.02 - PROPOSAL REQUIREMENTS AND CONDITIONS

Article 1.02.04 – Examination of Plans, Specifications, Special Provisions and Site of Work:

Replace the third sentence of the last paragraph with:

The Department cannot ensure a response to inquiries received later than ten (10) days prior to the original scheduled opening of the related bid.

SECTION 1.05 - CONTROL OF THE WORK

In Article 1.05.06 – Cooperation with Utilities is supplemented as follows:

The Contractor shall notify the following utilities 10 business days prior to the start of work.

1. Connecticut Natural Gas Corporation, Engineering Department
   76 Meadow Street, 1st Floor
   East Hartford, CT 06108

   Mr. Vasant C. Patel
   Manager - Utility Coordination

   PHONE: (860) 727-3114
   E-MAIL: vpatel@ctgcorp.com

2. The Southern New England Telephone Company dba Frontier Communications of Connecticut
   1441 North Colony Road
   Meriden, CT 06450-4101

   Mr. Eric Clark
   Construction Manager - Statewide Structure Access

   PHONE: (203) 238-7407
   E-MAIL: erc532@ftr.com

3. The Connecticut Light and Power Company dba Eversource Energy - Electric Distribution
   107 Selden Street
   Berlin, CT 06037

   Mr. Edward Schneider
   Engineering Manager - System Projects

   PHONE: (860) 665-3686 EXT: Mobile: (860) 685-0453
   E-MAIL: edward.schneider@eversource.com

4. The Metropolitan District
   555 Main Street, P.O. Box 800
   Hartford, CT 06142-0800

   Mr. Richard Norris P.E.
   Project Engineer / Utility Liaison

   PHONE: (860) 278-7850 EXT: 3450
   E-MAIL: rnorris@themdc.com

5. Lightower Fiber Networks
   900 Corporate Boulevard
   Newburgh, New York 12550

   Mr. Kevin DeLouise
   VP/GM HV & CT - Operations

   PHONE: (845) 458-7752
   Mobile: 917-860-8472
   E-MAIL: KDeLouise@lightower.com

6. CoxCom, Inc.
   801 Parker Street
   Manchester, CT 06045

   Mr. Thomas Derway
   Capital/Utility Coordinator

   PHONE: (860) 432-5040
   E-MAIL: thomas.derway@cox.com

The Contractor shall perform the work in accordance with the following requirements for protection of the Gas Main:

1. **General Provisions:**

CNG GENERAL PROVISIONS FOR CONTRACTORS WHEN EXCAVATING OVER CAST IRON GAS MAINS

1. Vibratory rollers shall not be used on subbase materials in the vicinity of cast iron mains closer than the distance equal to the width of the roller drum from the axis of the pipe. Static-type rollers are allowed. Once subbase materials have been placed to grade, vibratory rollers are permitted for installing bituminous pavement.

2. When excavating to subgrade, the use of heavy duty bulldozers, scrapers, or other types of heavy earth-moving equipment are not allowed over cast iron gas mains. This type of equipment is limited to within 18 inches of cast iron pipe as measured from its o.d. Small lightweight dozers or tractor payloader type equipment is permitted.

3. When excavating to subgrade, contractors must not allow use of heavy equipment to traverse across or over the cast iron gas main facility until the first course of base material has been installed. Compaction of the subbase material directly over the facility must be completed in the prescribed lifts without the use of heavy-duty impactors.

4. Hand probing to locate gas mains and services is required by Public Act 87-71. It is required that this procedure be practiced by all excavators prior to performing any excavation over the gas facilities. Especially susceptible to damage from road excavation are gas services and the hubs or flanges of cast iron gas mains.

5. When breaking roadway concrete, the use of a "headache ball" and impactors is not allowed.

6. Contractors are required to maintain the markout that the CNG representative has provided. Offset markers are permissible provided they are placed in an area where they are not covered or in any way encumbered from view. The contractor must maintain these marks for the duration of his work in that area.

7. When excavating a trench resulting in the crossing of a cast iron gas facility, exposure or undermining must be kept to a minimum. Contractors are responsible for providing temporary and permanent supports in these areas. Replacement of the cast iron facility at the **contractor's expense** can be avoided if exposure is limited as outlined in CNG Company Policy 480.01 (enclosed).

8. When an excavation parallels a cast iron facility, conflicts resulting in the replacement of the cast iron pipe can be avoided by prescribing to CNG Company Policy 930.01 (enclosed).

9. Contractors are required by State law to telephone "Call Before You Dig" prior to performing actual excavation, blasting, or demolition. The notifications to "Call Before You Dig" should be made at least 48 hours in advance.

10. When a contractor anticipates blasting to be necessary, the requirements of CNG's Blasting Policy 482.01 must be upheld (enclosed).

2. Protection-Replacement of Exposed Gas Mains:

Date: 3/22/07

CONNECTICUT NATURAL GAS CORPORATION

DEPARTMENTAL PROCEDURE (480.01)

PROTECTION/REPLACEMENT OF EXPOSED GAS FACILITIES

PURPOSE

This procedure establishes Corporate policy for the protection/replacement of gas facilities when exposed.

The practice of the Corporation is to adhere to the prescriptions of appropriate sections of Title 49 of the Code of Federal Regulations, Part 192.614. Any contractor, utility company crew, builder, or excavator must adhere to the regulations.

PROCEDURE

I. DEFINITIONS

A. Excavation - An operation for the purpose of movement or removal of earth, rock, or other materials in or on the ground, or otherwise disturbing the subsurface of the earth, by the use of powered or mechanized equipment. This includes, but is not limited to, digging, pile driving, augering, backfilling, test boring, drilling, grading, plowing-in, hammering, pulling-in, trenching, and tunneling.

B. Damage - Includes, but is not limited to, the weakening of structure or support, penetration or destruction of the protective coating, housing, or the severance, partial or complete, of gas facilities.

C. Gas Facility - All physical facilities which house or move gas for transportation and distribution including pipe, valves, and other appurtenances attached to the pipe.

II. NOTIFICATION

A. A copy of this procedure is given to all agencies requesting review of their proposed construction designs.

B. Upon receipt of outside agencies' plans, maps, and correspondence, Engineering Services reviews the project relative to the Corporation's facilities and responds to the requesting party.

C. The excavator notifies "Call Before You Dig" (CBYD) as prescribed by Connecticut State Law, Section 16-345 of Public Act 87-71.

D. Once excavation is started, the construction site supervisors are responsible for visiting the excavation site as outlined in Procedure #929.01 - "Monitoring of CNG Gas Facilities."

Refer to Procedure Memorandum #480.01

CONNECTICUT NATURAL GAS CORPORATION

DEPARTMENTAL PROCEDURE (480.01)

PROTECTION/REPLACEMENT OF EXPOSED GAS FACILITIES

III. GUIDELINES

A. General

1. The support for the gas facility either by strapping (see EXHIBITS I and III) or wooden vertical supports (see EXHIBIT II) is installed in a manner that the pipe does not move when the soil is removed from under the pipe and that undue stress is not imposed at fittings, valves, and other accessories on the pipe.

2. Trench shoring practices are not affected by the requirements outlined in this procedure.

3. An excavator is responsible for any damages that he/she inflicts upon the Corporation's facilities.

4. If the excavator/contractor is to be billed for damages or a replacement, the Distribution Supervisor documents, takes photographs of the affected facility, and immediately sends a letter (Exhibit IV) to the excavator/contractor stating that a bill will be forthcoming.

5. Any conflicts between CNG or the excavator/contractor regarding the billing for repair of the damage or the possible replacement are resolved by a Distribution Manager.

B. Crossings

1. Temporary Support - Cast Iron, Steel, Plastic

   EXHIBIT I is a drawing which depicts a temporary support for a gas main that crosses a trench at any angle with an exposed pipe length of greater than six feet for cast iron or ten feet for plastic or steel (see 2b).

2. Permanent Support - Cast Iron

   a. When cast iron pipe crossing exposure is six feet or less in length, one permanent pipe support is required (see EXHIBIT II).

   b. When cast iron pipe is six inches or less in diameter and crossing exceeds six feet in length, the pipe is replaced. When this condition exists, the replacement consists of the length of exposure plus a minimum of four feet measured perpendicular from the trench wall to the pipe. The removal and replacement expense is borne by the excavator/contractor.

Date: 3/22/07

CONNECTICUT NATURAL GAS CORPORATION

DEPARTMENTAL PROCEDURE (480.01)

PROTECTION/REPLACEMENT OF EXPOSED GAS FACILITIES

c. When cast iron pipe is greater than six inches in diameter and is crossed and exceeds six feet in length, two or more permanent pipe supports are required.

d. When cast iron pipe is greater than six inches in diameter and is crossed and the exposure exceeds 12 feet in length, it is considered for possible replacement depending on site conditions.

3. Permanent Support - Steel, Plastic

A firm foundation of properly compacted backfill is the only permanent support required for plastic or steel pipe.

C. Parallel Excavation

1. Temporary Support - Cast Iron, Steel, Plastic

a. The EXHIBIT III drawing depicts a type of temporary support for a gas main that is exposed or undermined by a parallel excavation.

b. The policy of the Company is to replace the cast iron pipe at the excavator's/contractor's expense.

1) If the relocation is not possible at the start of the project, temporary supporting may be permitted by CNG after consideration is given to the type of pipe, length of exposed pipe, service lines, and other pertinent facts.

2) When temporary support is allowed, it should be done in a manner similar to EXHIBIT III. After the completion of the project, the replacement of a facility is scheduled to be replaced in accordance with Procedure #930.01 - "Replacement of Cast Iron Pipe."

Date: 3/22/07

CONNECTICUT NATURAL GAS CORPORATION

DEPARTMENTAL PROCEDURE (480.01)

PROTECTION/REPLACEMENT OF EXPOSED GAS FACILITIES

2. Permanent Support - Cast Iron

   a. After the excavation and before backfilling, if the length of exposure of a cast iron main is less than six feet, the main must be permanently supported as shown in EXHIBIT III.

   b. If the length of exposure is greater than six feet, the pipe is replaced in compliance with Departmental Procedure #930.01. The cost of this replacement will be borne by the excavator/contractor.

Approved:

Regional Director – CNG Field Operations 3/22/07

Refer to Procedure Memorandum #480.01

EXHIBIT I

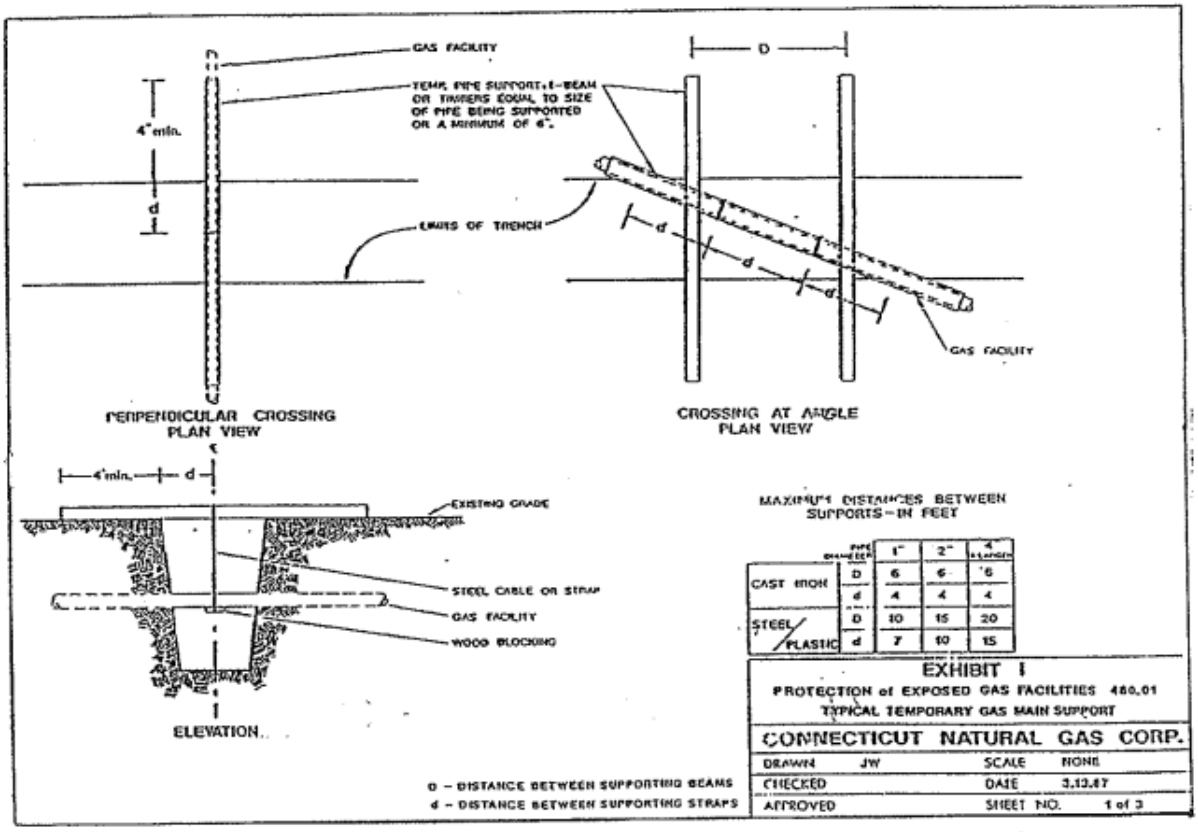
GAS FACILITY
TEMP. PIPE SUPPORT: I-BEAM OR TIMBERS EQUAL TO SIZE OF PIPE BEING SUPPORTED OR A MINIMUM OF 6".
4" min.
d
EDGES OF TRENCH
D
d
d
d
GAS FACILITY
PERPENDICULAR CROSSING
PLAN VIEW
CROSSING AT ANGLE
PLAN VIEW
4" min.
d
EXISTING GRADE
STEEL CABLE OR STRAP
GAS FACILITY
WOOD BLOCKING
ELEVATION
MAXIMUM DISTANCES BETWEEN SUPPORTS – IN FEET
PIPE DIAMETER
1"
2"
4" & LARGER
CAST IRON
D
6
6
6
d
4
4
4
STEEL / PLASTIC
D
10
15
20
d
7
10
15
D – DISTANCE BETWEEN SUPPORTING BEAMS
d – DISTANCE BETWEEN SUPPORTING STRAPS
EXHIBIT I
PROTECTION of EXPOSED GAS FACILITIES 460.01
TYPICAL TEMPORARY GAS MAIN SUPPORT
CONNECTICUT NATURAL GAS CORP.
DRAWN JW
SCALE NONE
CHECKED
DATE 3.13.87
APPROVED
SHEET NO. 1 of 3

EXHIBIT II

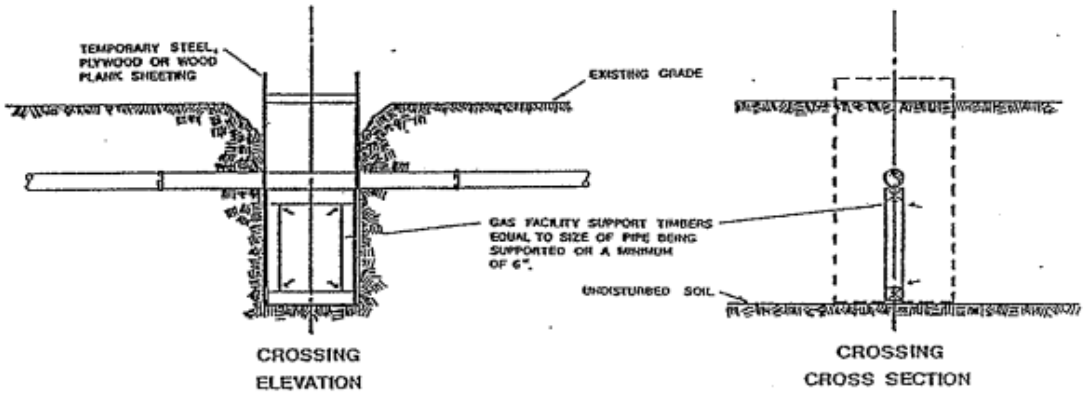

= WOOD WEDGES AS REQUIRED

EXHIBIT II			
PROTECTION of EXPOSED GAS FACILITIES 460.01			
TYPICAL PERMANENT CAST IRON GAS MAIN SUPPORT			
CONNECTICUT NATURAL GAS CORP.			
DRAWN	JW	SCALE	NONE
CHECKED		DATE	3.13.87
APPROVED		SHEET NO.	2 of 3

EXHIBIT III

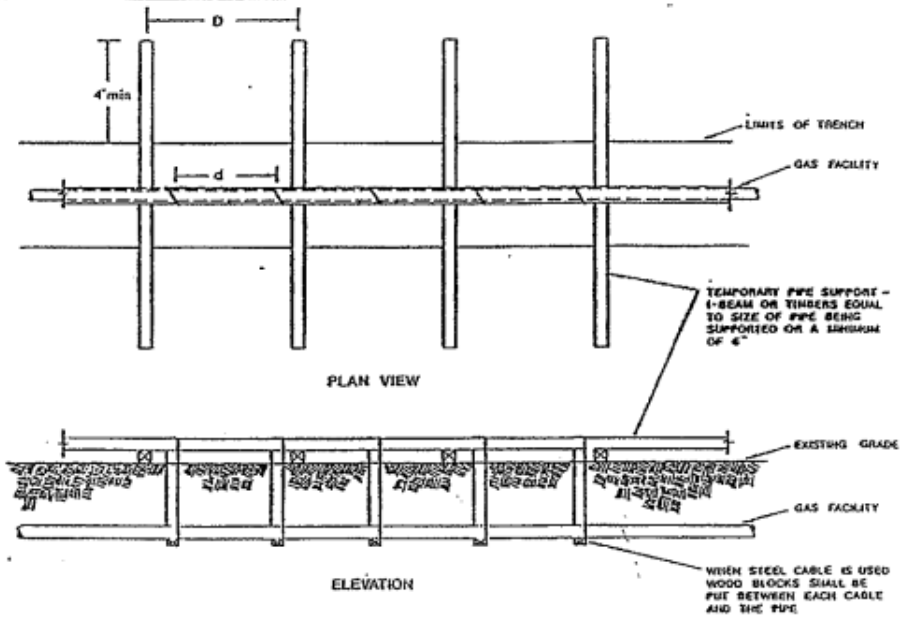

MAXIMUM DISTANCES BETWEEN SUPPORTS - IN FEET

	PIPE DIAMETER	1"	2"	4" & LARGER
CAST IRON	D	6	6	6
	d	4	4	4
STEEL/PLASTIC	D	10	15	20
	d	7	10	15

D - DISTANCE BETWEEN SUPPORTING BEAMS
d - DISTANCE BETWEEN SUPPORTING STRAPS

EXHIBIT III
PROTECTION of EXPOSED GAS FACILITIES 480.01
TYPICAL TEMPORARY GAS MAIN SUPPORT/PARALLEL EXCAVATIONS

CONNECTICUT NATURAL GAS CORP.			
DRAWN	JW	SCALE	NONE
CHECKED		DATE	3.13.87
APPROVED		SHEET NO.	3 of 3

Exhibit IV

Excavator's Name
Excavator's Address
City, State, Zip

Re:

Gentlemen:

Connecticut Natural Gas Construction Site Inspector, , states that as a result of your excavating operations on , approximately feet of inch cast iron pipe was exposed and/or undermined.

It is the responsibility of the excavator to exercise reasonable care in accordance with the State of Connecticut Public Act 87-71, Section 16-345-4, Responsibility of Excavators:

> ("a") [V] (5) Exercise reasonable care when working in proximity to the under-ground facilities of any public utility. REASONABLE CARE SHALL INCLUDE, WITHOUT LIMITATION, THE USE OF CONSTRUCTION METHODS APPROPRIATE TO ENSURE THE INTEGRITY OF EXISTING UTILITY FACILITIES AND THEIR TEMPORARY AND PERMANENT SUPPORT INCLUDING BUT NOT LIMITED TO ADEQUATE AND PROPER SHORING AND PROPER BACKFILL METHODS AND TECHNIQUES; THE SELECTION OF EQUIPMENT AND EXPLOSIVES CAPABLE OF PERFORMING THE WORK WITH THE MINIMUM REASONABLE LIKELIHOOD OF DISTURBANCE TO UNDERGROUND FACILITIES; ADEQUATE SUPERVISORY PERSONNEL TO ENSURE PROPER ACTIONS; PROPER UNDERSTANDING BY THE PERSONNEL ON THE JOB SITE OF THE AUTHORITY OF ALL PARTIES INVOLVED IN THE ACTIVITY SO THAT PROMPT ACTION CAN BE TAKEN IN THE EVENT OF UNANTICIPATED CONTACT WITH UNDERGROUND FACILITIES; ADEQUATE TRAINING OF EMPLOYEES IN EXECUTING THEIR ASSIGNMENTS TO ENSURE PROTECTION OF UTILITY FACILITIES AND THE PUBLIC; MAINTAINING NECESSARY LIAISON WITH OWNERS OF UNDERGROUND FACILITIES; SPONSORING PREPLANNING AND PRECONSTRUCTION MEETINGS AS NECESSARY AND COMPLYING WITH ALL APPLICABLE LAWS AND REGULATIONS."

The cast iron pipe appears to have been undermined to an extent that jeopardizes the integrity of the facility. As a result, replacement of the facility in the immediate vicinity of excavation may be necessary. If replacement is necessary, a bill for the replacement will be submitted to you in the near future once the work is complete.

If you have any questions regarding this matter, please contact me.

Very truly yours,

Construction Site Inspector

Refer to Procedure Memorandum #480.01

3. Guidelines for Digging and Backfilling:

76 Meadow Street
East Hartford, CT
06108-3218
Distribution Dispatch Office
Contact Number
860-727-3206
or
Old Track Road
Greenwich, CT 06830
Contact Number
203-422-6022

Effective May 2004

An Energy East Company

GUIDELINES FOR DIGGING AND BACKFILLING

CONNECTICUT NATURAL GAS CORPORATION

HARTFORD & GREENWICH

Builder Contacts

LINE ASSIGNMENTS (MAINS)

CNG representative will provide prints of the line assignment to the builder which will be used to determine the location of the gas line.

If there is any question concerning the line assignment, the builder or his designated agent should call the Hartford Division Engineering Department (860-727-3484) or the Greenwich Division Engineering Department (203-422-6017).

SERVICE OR MAIN INSTALLATIONS

Hartford Division
Lead Analyst, Marketing & Sales (860) 727-3032
Greenwich Division
Builder Sales Representative (203) 422-6017

CNG's representative will visit your job site to determine when the main or services should be scheduled for installation. The representative will measure the length of the service and mark the meter location for all structures that are ready to accept the new lateral. It is preferred to install the service riser to the structure after it has been framed to avoid conflicts such as clearances from windows or doorways and other utilities.

The builder must notify Call-Before-You-Dig (1-800-922-4455) at least two full working days prior to excavation so that the other utility locations can be properly marked out.

Scheduling

Gas facilities should be installed only after all other utilities (sewer, water, electric and telephone) have been installed.

To finalize and confirm the date of installation, contact the Distribution office:

860-727-3280 (Hartford)
203-422-6022 (Greenwich)

If a site meeting is required, it can be arranged at this time.

Unless agreed to separately, the builder shall provide the following minimum trench lengths in advance of the CNG/sub-contractor pipe installation crew arriving to begin their work. The trench should be excavated and all rocks and debris removed. A minimum of 3" thick approved sand padding should be installed.

Steel Pipe

Pipe Size:	1-1/4-2"	4"	6"
Minimum length	350'/day	350'/day	300'/day

Plastic Pipe

Pipe Size:	1-1/4-2"	4"	6"
Minimum length	500'/day	350'/day	300'/day

Excavation Requirements

The minimum requirements for trench width are:

Pipe Diameter	Trench Width
1/2-4"	12"
6-8"	18"
10" & above	24"

1. A minimum of 1'0" vertical clearance and 3'0" horizontal clearance must be maintained between the gas line and all other structures.
2. Minimum cover over the pipe shall be measured as follows (also see reverse):

   In the traveled portion of the roadway
   Minimum cover shall be 30" from the top of the pipe to the top of the trench using the shallow side measurement.

   Off of the traveled portion when the section is at a lower elevation than the traveled way
   Minimum cover shall be from 24" from the top of the trench using the shallow side for measurement.

   Off of the traveled portion when the section is at a higher elevation than the traveled way
   Minimum cover shall be from 24" with the elevation taken from the gutter line.
3. Minimum cover of service lines in private property shall be 18" when outside paved areas, i.e. parking lot, or when approved by a CNG inspector or designee.
4. The bottom of the trench must be free of rocks, debris or water that could damage the pipe or its coating.
5. Prior to laying the pipe, a minimum of 3" of screened sand must be placed in the bottom of the trench. (Screened sand should be comparable to Mason sand.).
6. The first layer of pipe protection must be a minimum of 4" of sand on the sides and 6" of sand on the top.

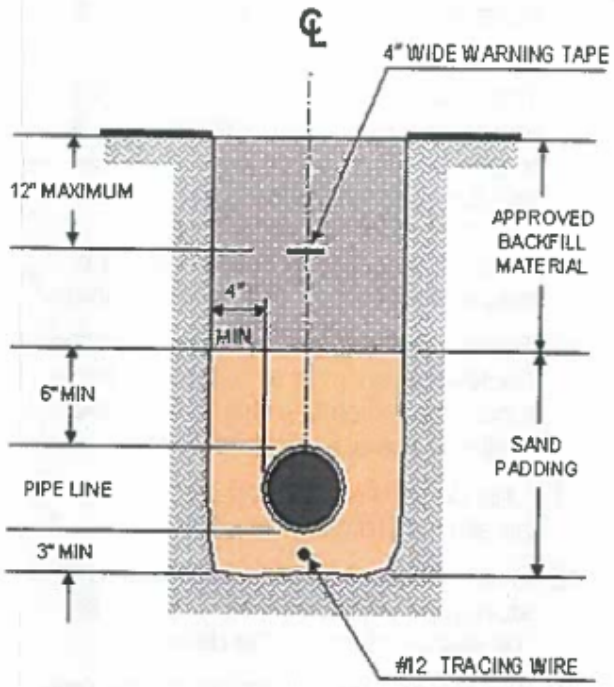

TRENCH CROSS SECTION

7. Exposed piping must be backfilled with a minimum of 6" of sand prior to leaving the job site each day and witnessed by a CNG representative or CNG contractor.
8. The final backfilling procedure shall be witnessed and inspected by a CNG representative. Only approved select backfill material will be used.
9. The builder, upon approval of a CNG representative or its subcontractor, is to place warning tape approximately one foot below finished grade before completing trench backfill when in paved area. Warning tape shall be 6" below grade when out of paved areas.
10. The builder is required to compact the backfill material within established protocol. Trench settlement is the responsibility of the customer to correct.
11. Only personnel qualified by CNG will be allowed to install gas lines.
12. CNG will require a suitable location to store pipe and materials. Security is the responsibility of the developer.
13. The builder will be responsible for payments to CNG's subcontractor for any additional items required to complete the installation, i.e. backfill material, labor or material. In addition, the builder will also be responsible for its damage to underground facilities and for those facilities exposed. The builder will be responsible for protecting and supporting all exposed underground facilities in a manner acceptable to the subject utility.

Note: As built cover to be from top of pipe @ ℄ to finish grade.

Minimum cover for mains shall be measured as follows:

A. Off of the traveled portion when the section is at a lower elevation than the traveled way: Minimum cover shall be from 24" from the top of the trench using the shallow side for measurement.

B. In the traveled portion of the roadway: Minimum cover shall be 30" from the top of the pipe to the top of the trench using the shallow side measurement.

C. Off of the traveled portion when the section is at a higher elevation than the traveled way: Minimum cover shall be from 24" with the elevation taken from the gutter line.

4. **Blasting Near Gas Pipes:**

Date: 3/22/07

CONNECTICUT NATURAL GAS CORPORATION

DEPARTMENTAL PROCEDURE 482.01

BLASTING NEAR PIPES CONVEYING COMBUSTIBLE GAS

PURPOSE

This outlines the procedures followed when blasting is required near pipes conveying combustible gas.

The practice of the Corporation is to assure the safety of its facilities by assuring that contractors comply with the Connecticut General Statute Sections 16-345 through 16-355 and the Connecticut Regulations of State Agencies Sections 16-345-1 et. seq. (see EXHIBIT I).

PROCEDURE

I. ADMINISTRATION

CNG shall obey and comply with all pertinent provisions of the Connecticut State Statutes and Regulations.

A. Engineering Services provides each city or town fire chief and state fire marshal a copy of the CNG guidelines for blasting and the guidelines are updated as necessary.

B. When notified by Call Before You Dig (CBYD) that there will be blasting near a CNG facility, the Distribution Supervisor obtains the time of blasting, the blaster's name, the person calling and the time notified. A Construction Site Inspection Form (See EXHIBIT II) is completed by the Distribution Supervisor.

C. The Distribution Supervisor obtains the necessary gas facility records and schedules the inspection at the job site.

II. DISTRIBUTION RESPONSIBILITIES

A. Prior to each blasting project, a Distribution Supervisor or their designee arranges to meet with the contractor and the blaster to:

1. Check the contractor's and blaster's permits and insurance certificates;

2. Review CNG's blasting policy with the general and blasting contractor;

3. Perform a leak survey of the entire blasting project area.

Date: 3/22/07

CONNECTICUT NATURAL GAS CORPORATION

DEPARTMENTAL PROCEDURE 482.01

BLASTING NEAR PIPES CONVEYING COMBUSTIBLE GAS

B. Prior to each detonation, the Distribution Supervisor or their designee arranges to meet with the contractor and the blaster to:

1. Complete Parts A through R and U through W of the CNG Blasting Investigation Report (see EXHIBIT III).

2. Conduct a leak survey prior to each detonation and record the results on Part S of the CNG Blasting Investigation Report. In the event a gas leak is detected, the Distribution Supervisor or his designee shall ensure that no further blasting occurs until the leak is repaired and all residual gas is cleared.

3. Inspect the site and plot W (maximum pounds/delay of eight milli-seconds or more) versus R (horizontal distance between explosion and pipeline) on EXHIBIT IV, using the appropriate pipe material type.

   a. If the plot of the parameters lies in the area marked "Blasting Allowed Upon Permission of Area Inspector", the Manager, Distribution Services is contacted.

   b. If the plot of the parameters lies in the area marked "Blasting Not Allowed", the Manager of Distribution Services is contacted.

   c. If any unusual conditions exist, the city or town inspector, fire chief, or state marshal are notified.

4. Any time the recommended CNG policy limit is planned to be exceeded, the Manager, Engineering Services shall be contacted. The Manager, Engineering Services or his designee shall consult a Connecticut certified blasting consultant to review and approve the proposed blasting plan. The expense for this shall be borne by the contractor responsible for the project.

Date: 3/22/07

CONNECTICUT NATURAL GAS CORPORATION

DEPARTMENTAL PROCEDURE 482.01

BLASTING NEAR PIPES CONVEYING COMBUSTIBLE GAS

C. After each detonation, the Distribution Supervisor or their designee:

1. Conducts a leak survey after each detonation and records the results on Part T of the Blasting Investigation Report. In the event a gas leak is detected, the Distribution Supervisor or his designee shall ensure that no further blasting occurs until the leak is repaired and all residual gas is cleared.

2. Returns the completed Blasting Investigation Report to Distribution for filing.

APPROVED: _____ CTM 3/22/07

TITLE: Regional Director- CNG Field Operations

Date: 3/22/07

CONNECTICUT NATURAL GAS CORPORATION

DEPARTMENTAL PROCEDURE 482.01

BLASTING NEAR PIPES CONVEYING COMBUSTIBLE GAS

Exhibit I

PUBLIC SERVICE COMPANIES
CHAPTER 293
SECTION 16-345
EXCAVATION, DEMOLITION, OR DISCHARGE OF EXPLOSIVES

Section

16-345	Definitions
16-346	Compliance with chapter required prior to excavation or discharge of explosives.
16-347	Public utilities to file with Department of Public Utility Control
16-348	Central clearinghouse. Apportionment of costs
16-349	Notice of proposed excavation, discharge of explosives or demolition
16-350	Permits to require compliance with chapter
16-351	Information and assistance relocation of underground facilities
16-352	Emergency excavation, demolition, or discharge of explosives
16-353	Relation of chapter to permits and other laws
16-354	Care to be exercised near underground facilities
16-355	Procedure when contact is made with or damage is suspected or done to underground

Law Review Commentaries
Regulated Industries. James E. Rice (1980) 54 Connecticut Bar J. 514

Date: 3/22/07

CONNECTICUT NATURAL GAS CORPORATION

DEPARTMENTAL PROCEDURE 482.01

BLASTING NEAR PIPES CONVEYING COMBUSTIBLE GAS

Section 16-345: Definitions.

(a) "Person" means an individual, partnership, corporation, or association, including a person engaged as a contractor by a public agency but excluding a public agency.

(b) "Public Agency" means the state or any political subdivision thereof, including any governmental agency.

(c) "Public Utility" means the owner or operator of underground facilities for furnishing electric, gas, telephone, telegraph, pipeline, sewage, water, community television antenna, steam or traffic signal service, including a municipal or other public owner or operator.

(d) "Central Clearinghouse" means the group of public utilities formed pursuant to Section 16-348 for the purposes of receiving and giving notice of excavation activity within the state.

(e) "Excavation" means an operation for the purposes of movement or removal of earth, rock, or other materials in or on the ground, or otherwise disturbing the subsurface of the earth, by the use of powered or mechanized equipment, including but not limited to digging, blasting, auguring, back filling, test boring, drilling, pile driving, grading, plowing-in, hammering, pulling-in, trenching and tunneling; excluding the movement of earth by tools manipulated only by human or animal power and the tilling of soil for agricultural purposes.

(f) "Demolition" means the wrecking, razing, rending, moving, or removing of any structure.

(g) "Damage" includes but is not limited to substantial weakening of structural or lateral support of a utility line, penetration or destruction of any utility line protective coating, housing or other protective device or the severance, partial or complete, of any utility line.

(h) "Approximate location of underground facilities" means a strip of land not more than three feet wide or a strip of land extending not more than one an done-half feet on either side of the underground facilities.

Date: 3/22/07

CONNECTICUT NATURAL GAS CORPORATION

DEPARTMENTAL PROCEDURE 482.01

BLASTING NEAR PIPES CONVEYING COMBUSTIBLE GAS

Section 16-346: Compliance with chapter required prior to excavation or discharge of explosives.

No person, public agency, or public utility shall engage in excavation or discharge explosives at or near the location of a public utility underground facility or demolish a structure located at nor near or containing a public utility facility without having first ascertained the location of all underground facilities of public utilities in the area of such excavation, discharge, or demolition in the manner prescribed in this chapter and in such regulations as the department shall adopt pursuant to Section 16-357.

Section 16-347: Public utilities to file with Department of Public Utility Control.

A public utility shall file with the Department of Public Utility Control the location of its underground facilities, except facilities for storm sewers, by reference to a standard grid system, to be established by the department, and the title, address, and telephone number of its representative designated to receive the notice required by Section 16-349.

Section 16-348: Central clearinghouse. Apportionment of costs.

The public utilities of the state shall, under the direction of the Department of Public Utility Control, organize and operate a central clearinghouse within the state for receiving and giving the notices required by Section 16-349. The department shall apportion the cost of this service equitably among the public utilities for those underground facilities registered with the department, as provided in Section 16-347, except sanitary sewer or water facilities owned or operated by a city, town, or borough.

Date: 3/22/07

CONNECTICUT NATURAL GAS CORPORATION

DEPARTMENTAL PROCEDURE 482.01

BLASTING NEAR PIPES CONVEYING COMBUSTIBLE GAS

Section 16-349: Notice of proposed excavation, discharge of explosives or demolition.

Except as provided in Section 16-352, a person, public agency, or public utility responsible for excavating or discharging explosives at or near the location of public utility facilities or demolishing a structure containing a public utility facility shall notify the central clearinghouse of such proposed excavation, discharge, or demolition, orally or in writing, at least two full days, excluding Saturdays, Sundays, and holidays, but not more than thirty days before commencing such excavation, demolition, or discharge of explosives. The central clearinghouse shall immediately transmit such information to the public utilities whose facilities may be affected. In the event the proposed excavation, demolition, or discharge of explosives has not commenced within thirty days of such notification, or the excavation, demolition, or discharge of explosives will be expanded outside of the location originally specified in such notification, the person, public agency or public utility responsible for such excavation, demolition or discharge of explosives shall again notify the central clearinghouse at least two full days, excluding Saturdays, Sundays, and holidays, but not more than thirty days before commencing or expanding such excavation, demolition, or discharge of explosives.

Section 16-350: Permits to require compliance with chapter.

Any permit issued by a public agency for excavation, demolition, or discharge of explosives shall require compliance with this chapter. No such permit shall be issued by any public agency unless such public agency receives satisfactory evidence from the person, public agency, or public utility seeking such permit that the requirements of this chapter have been met. Such evidence shall be obtained from the central clearinghouse and shall be in such form as the department may prescribe by regulations pursuant to Section 16-357.

Date: 3/22/07

CONNECTICUT NATURAL GAS CORPORATION

DEPARTMENTAL PROCEDURE 482.01

BLASTING NEAR PIPES CONVEYING COMBUSTIBLE GAS

Section 16-351: Information and assistance relocation of underground facilities.

A public utility receiving notice pursuant to Section 16-349 shall inform the person, public agency, or pubic utility proposing to excavate, discharge explosives, or demolish a structure, of the approximate location of its underground facilities in the area in such manner as will enable such person, public agency, or public utility to establish the precise location of the underground facilities, and shall provide such other assistance in establishing the precise location of the underground facilities as the department may require by regulation pursuant to Section 16-357. Such person, public agency, or public utility shall designate the area of the proposed excavation, demolition, or discharge of explosives as the department may prescribe by regulation. The public utility receiving notice shall mark the approximate location of its underground facilities in such manner and using such methods, including color coding, as the department may prescribe by regulation. If the precise location of the underground facilities cannot be established, the person, public agency, or public utility shall so notify the public utility whose facilities may be affected, which shall provide such further assistance as may be needed to determine the precise location of the underground facilities in advance of the proposed excavation or discharge of explosives or demolition.

Section 16-352: Emergency excavation, demolition, or discharge of explosives.

(a) In case of emergency involving danger to life, health, or property or which requires immediate correction to continue the operation of a major industrial plant, or to assure the continuity of public utility service, excavation, or demolition without explosives may be made without the two-day notice required to Section 16-349 provided notice thereof by telephone is given as soon as reasonably possible.

(b) In case of an emergency involving an immediate and substantial danger of death or serious personal injury, explosives may be discharged if notice thereof is given at any time before discharge.

Date: 3/22/07

CONNECTICUT NATURAL GAS CORPORATION

DEPARTMENTAL PROCEDURE 482.01

BLASTING NEAR PIPES CONVEYING COMBUSTIBLE GAS

Section 16-353: Relocation of chapter to permits and other laws.

Except as provided in Section 16-350, this chapter shall not be construed to affect or impair local ordinances, charters, or other provisions of law requiring permits to be obtained before excavating in a public highway or to demolish structures on private property, nor shall it be construed to grant to any person or public agency any rights not specifically provided by this chapter. A permit from a public agency shall not relieve any person from responsibility for complying with the provisions of this chapter. The failure of any person who has been granted a permit to comply with the provisions of this chapter shall not be deemed to impose any liability upon the public agency issuing the permit.

Section 16-354: Care to be exercised near underground facilities.

A person, public agency, or public utility responsible for excavating, discharging explosives, or demolition shall exercise reasonable care when working in proximity to the underground facilities of any public utility and shall comply with such safety standards and other requirements as the department shall prescribe by regulation pursuant to Section 16-357. If the facilities are likely to be exposed, such support shall be provided as may be reasonably necessary for protection of the facilities. If gas facilities are likely to be exposed, only hand digging shall be employed.

Section 16-355: Procedure when contact is made with or damage is suspected or done to underground.

When any contact is made with or any damage is suspected or done to any underground facility of a public utility, the person, public agency, or public utility responsible for the operations causing the contact, suspected damage or damage shall immediately notify the public utility whose facilities have been affected, which shall dispatch its own personnel as soon as reasonably possible to inspect the underground facility and, if necessary, effect temporary or permanent repairs. If a serious electrical short is occurring or if dangerous fluids or gas are escaping from a broken line, the person, public agency, or public utility responsible for the operations causing the damage shall alert all persons within the danger area and take all feasible steps to insure the public safety pending the arrival of repair personnel. As used in this section, "contact" includes, without limitation, the striking, scraping, or denting, however slight, of any underground utility facility, the structural or lateral support of an underground utility line and any underground utility line protective coating, housing, or other protective device.

EXHIBIT II

CONSTRUCTION SITE INSPECTION

PAGE ____ OF ____

STREET: _____ TOWN: _____ INSPECTOR: _____
EXCAVATOR: _____ CBYD #: _____ DATE: _____
EXCAVATOR CONTACT PERSON: _____ TIME ARRIVED: _____
EXCAVATOR PHONE #: _____ TIME DEPARTED: _____
EXCAVATOR ADDRESS:

INSTALLATION ☐ REPAIR ☐

TYPE OF EXCAVATION

- ☐ San Sewer
- ☐ Storm Drain
- ☐ Water
- ☐ Foundations
- ☐ Telephone
- ☐ Electric
- ☐ Cable TV
- ☐ Manhole
- ☐ Gas
- ☐ Road Reconstruction
- ☐ Blasting (Form 815.65 Required)
- ☐ Other

EXCAVATION CLASSIFICATION

Excavation Classification Grade A B C

Criteria No(s) _____ (See Reverse Side)

Limit of Proposed Excavation: From: _____ To: _____ Length: _____ Ft.
Limit of Actual Excavation: From: _____ To: _____ Length: _____ Ft.
Average Depth of Excavation: ____ Ft. ____ In.
Average Width of Excavation: ____ Ft. ____ In.
Distance from C/L of Excavation to Gas Facility: ____ Ft. ____ In.

Existing Gas Facilities Within Scope of Inspection/Proposed work area: MAINS
Material _____ Size _____ Pressure Class _____ Cover _____
Material _____ Size _____ Pressure Class _____ Cover _____

Existing Gas Facilities Within Scope of Inspection/Proposed work area: SERVICES
Material _____ Size _____ Pressure Class _____ Cover _____
Material _____ Size _____ Pressure Class _____ Cover _____

Other Gas Facilities: _____
Gas Facility Exposed? Yes ☐ No ☐ If Yes, Complete 'Existing Pipe Inspection' Section
Critical Valve Located? Yes ☐ No ☐ If Yes, Attach Copy of Valve Record Cards

EXISTING PIPE INSPECTION

MATERIAL: Steel ☐ MD Plastic ☐ HD Plastic ☐ C. Iron ☐ Copper ☐ Other ☐ _____
COATING: None ☐ X-Tru ☐ Coal Tar ☐ Thin Film ☐ Other ☐ COATING CONDITION: Good ☐ Fair ☐ Poor ☐
TYPE CORROSION: None ☐ Rust/Scale ☐ Shallow Pits ☐ Deep Pits ☐ Leak ☐ Graphitization (Cast Iron) ☐

LEAKAGE SURVEY

Pre-Construction Survey: Date of Previous Annual Leakage Survey: _____
Existing Leakage: Yes ☐ No ☐
Location: _____ Order No: _____ Date: _____
Location: _____ Order No: _____ Date: _____
Inspection Leakage Survey:
From: _____ To: _____ Length: _____ Ft.
F.I. ID No. _____ CGI ID No. _____ Date: _____
Leakage Detected: Yes ☐ No ☐ If Yes, Attach Copy of 'Leak Survey Field Report'

NTACT WITH EXCAVATOR/COMMENTS: _____

SEE BACK SIDE:

ATTACHMENTS

- ☐ CBYD Ticket
- ☐ CNG Prints
- ☐ Photograph
- ☐ F.I. Survey
- ☐ Inspection Sketch
- ☐ Construction Drawing
- ☐ Valve Record Cards
- ☐ Other _____
- ☐ Blasting Investigation Report (815.65)
- ☐ Leak Survey Field Report (C:-LEAK (1-92))
- ☐ Hand Written Work Order (P-30)

EXHIBIT III

BLASTING INVESTIGATION REPORT

A. Prepared by _____

B. Date: _____

C. CBYD Ticket No. _____

D. Time of Arrival at Job Site _____

E. Location _____ Town _____

F. Contractor _____ Subcontractor _____

G. Contractor's Insurer _____

H. Blasting Contractor _____ Blaster's Name _____

I. Blasting Company's Insurer _____

J. Material to be Blasted _____ Pipe Material _____

K. Time of Blast

L. Horizontal Distance to Nearest Gas Line (ft), R

M. Amount of Explosive per Delay (lbs./delay), W

N. Number of Delays

O. Time per Delay (Milliseconds)

P. Depth of Blast Hole (Feet)

Q. Depth of Gas Pipeline (Feet)

R. Diameter of Pipeline (Inches)

S. CGI Reading Before Detonation

U. CGI Reading After Detonation

U. CGI Serial Number

(Continued on page 2)

EXHIBIT III

BLASTING INVESTIGATION REPORT

V. Sketch of Area

W. Sketch of Blast Hole

EXHIBIT IV

STEEL

CHARGE-DISTANCE LIMITS IN BLASTING
NEAR BURIED PIPELINES

REFER TO PROCEDURE MEMORANDUM #482.01

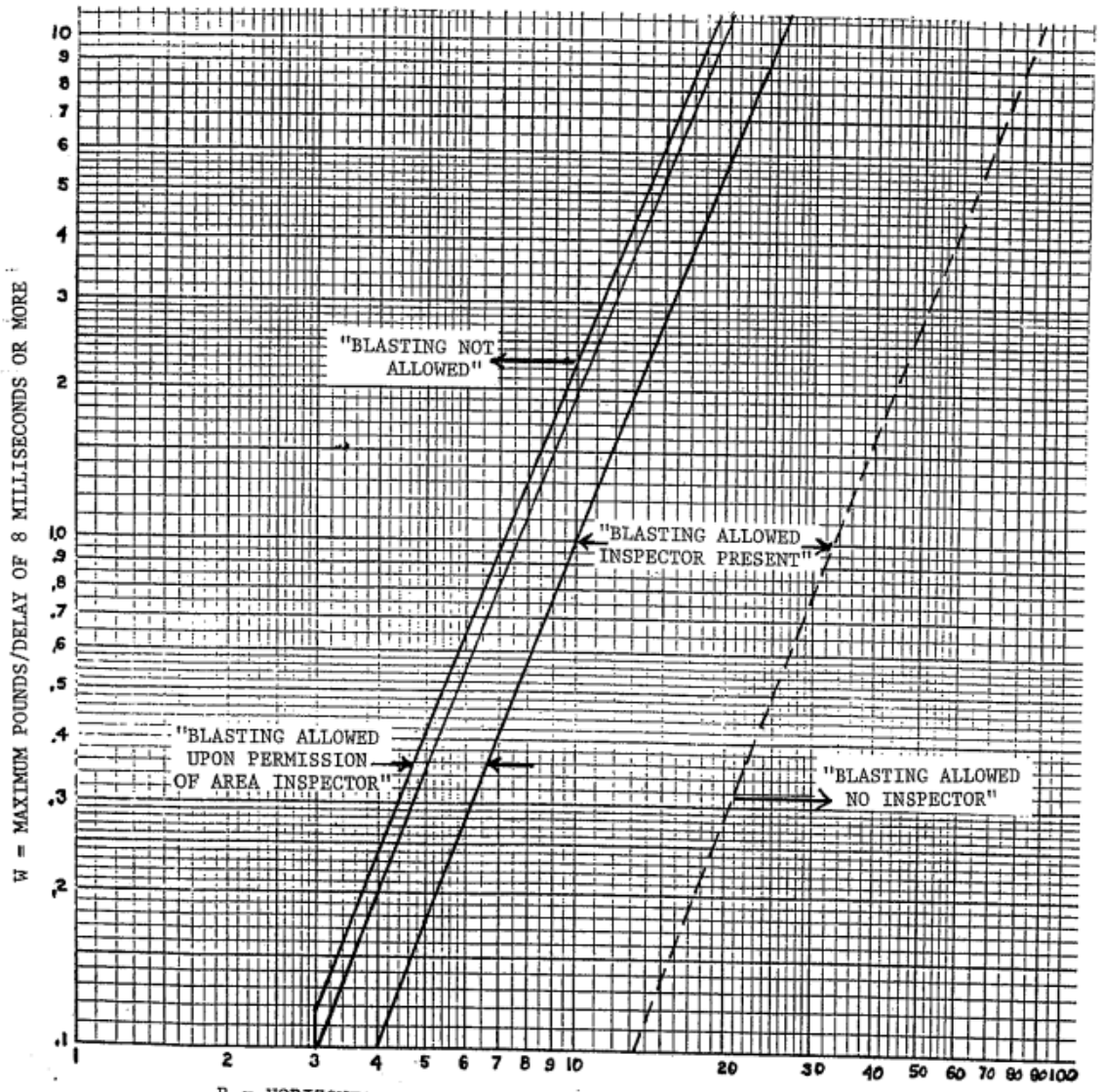

EXHIBIT IV

PLASTIC

CHARGE-DISTANCE LIMITS IN BLASTING
NEAR BURIED PIPELINES

REFER TO PROCEDURE MEMORANDUM #482.01

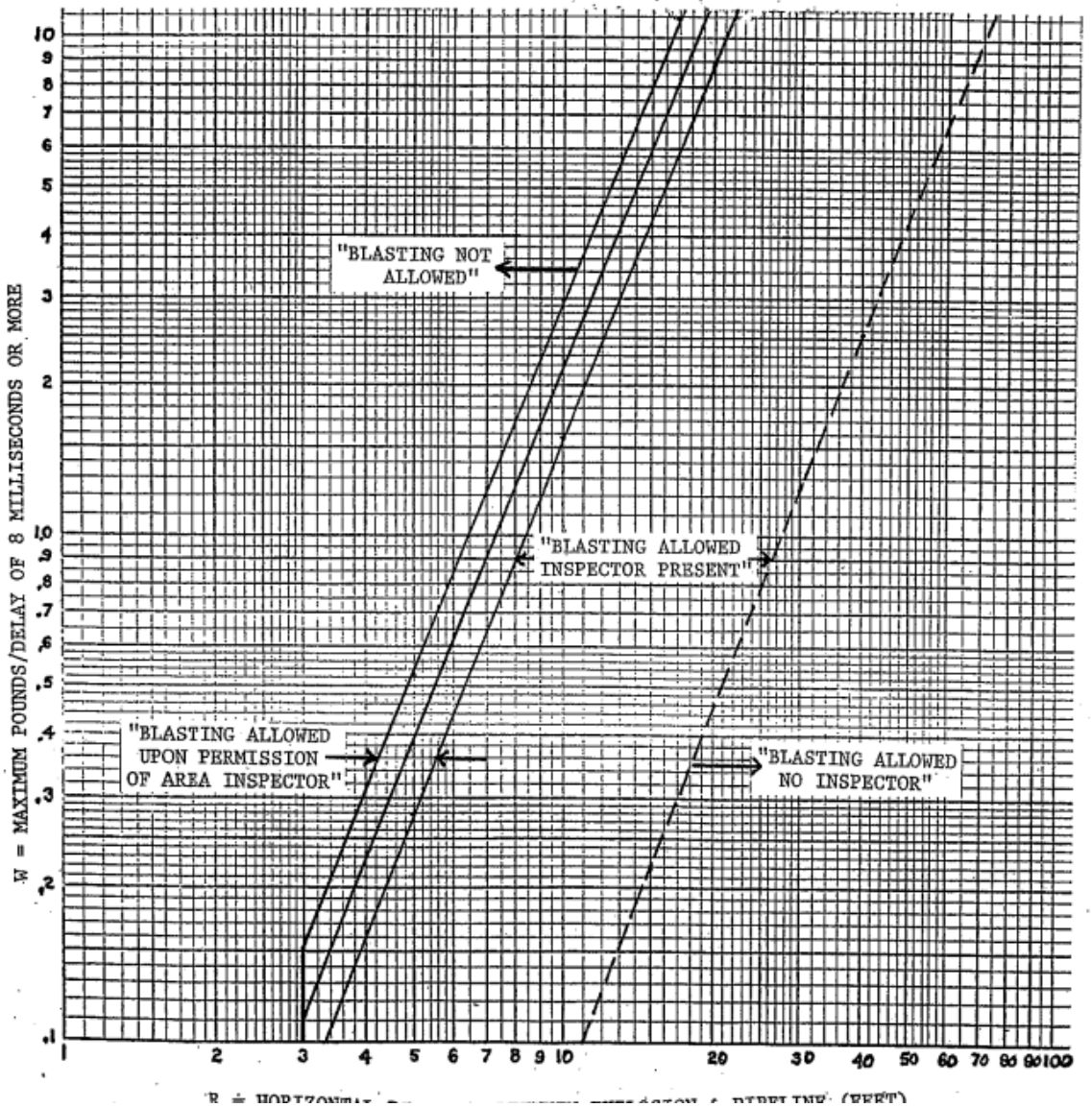

EXHIBIT IV

CAST IRON AND BARE STEEL

CHARGE-DISTANCE LIMITS IN BLASTING
NEAR BURIED PIPELINES

REFER TO PROCEDURE MEMORANDUM #482.01

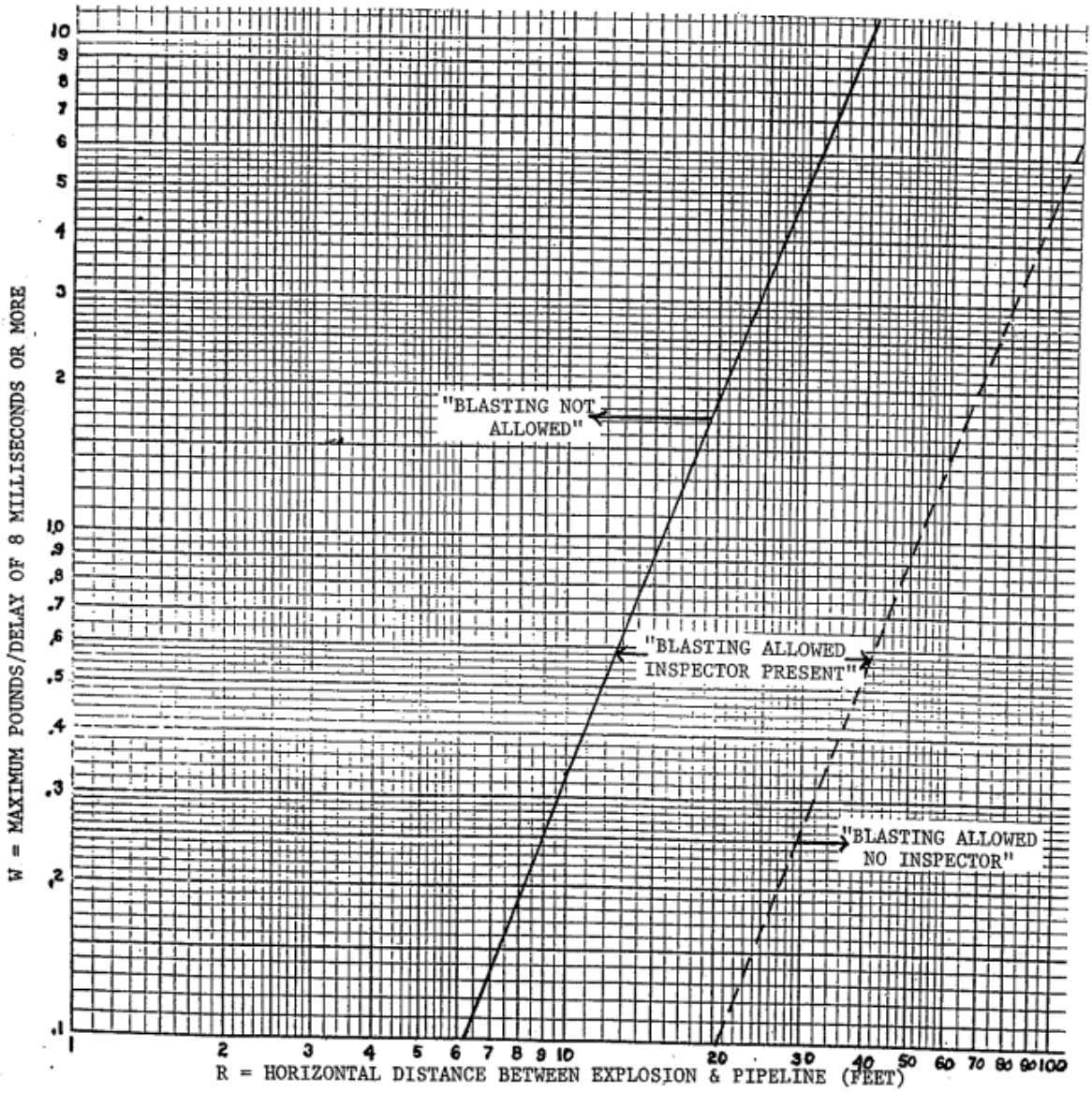

SECTION 1.07 - LEGAL RELATIONS AND RESPONSIBILITIES

Article 1.07.10 - Contractor's Duty to Indemnify the State against Claims for Injury or Damage:

Add the following after the only paragraph:

"It is further understood and agreed by the parties hereto, that the Contractor shall not use the defense of Sovereign Immunity in the adjustment of claims or in the defense of any suit, including any suit between the State and the Contractor, unless requested to do so by the State."

Article 1.07.11 Opening of Section of project to Traffic or Occupancy:

Add the following sentence to the last paragraph;

"In cases in which guiderail is damaged by the traveling public, repair or replacement will be reimbursable as contained elsewhere herein."

SECTION 1.08 - PROSECUTION AND PROGRESS

Article 1.08.04 - Limitation of Operations - Add the following:

In order to provide for traffic operations as outlined in the Special Provision "Maintenance and Protection of Traffic," the Contractor will not be permitted to perform any work which will interfere with the described traffic operations on all project roadways as follows:

Route 99 (Main Street)

Monday through Friday between 6:00 a.m. and 9:00 a.m. & between 12:00 p.m. and 7:00 p.m.
Saturday and Sunday between 10:00 a.m. and 6:00 p.m.

During the bridge replacement, The Contractor will be allowed to close Route 99 and detour traffic for a duration that shall not exceed seven consecutive days, and shall not take place during a week which contains a Holiday or Special Event.

The Contractor shall notify the Engineer at least 14 days in advance of the start of the Route 99 closure.

All Other Roadways

Monday through Friday between 6:00 a.m. and 9:00 a.m. & between 3:00 p.m. and 6:00 p.m.
Saturday and Sunday between 10:00 a.m. and 6:00 p.m.

Special Events

The Contractor will not be allowed to perform any work that will interfere with the existing traffic operations during the week of the Travelers Championship.

This restriction is in addition to the restrictions noted above. A schedule for the Travelers Championship shall be requested through the Town of Rocky Hill and shall be the responsibility of the Contractor.

SECTION 1.10 - ENVIRONMENTAL COMPLIANCE

In Article 1.10.03-Water Pollution Control:
BEST MANAGEMENT PRACTICES

Add the following after Best Management Practice Number 14:

15. The Contractor is hereby notified that the State listed species of Special Concern Eastern box turtle (*Terrapene carolina*), is present within the Project limits**.** In Connecticut, this terrestrial turtle lives in a variety of habitats, including woodlands, field edges, thickets, marshes, bogs, and stream banks. Typically, however, Eastern box turtles are found in well-drained forest bottomlands and open deciduous forests. They will use wetland areas at various times during the season. During the hottest part of a summer day, they will wander to find springs and seepages where they can burrow into the moist soil. Eastern box turtles overwinter in upland forest, a few inches under the soil surface, typically covered by leaf litter or woody debris. As soil temperatures drop, the turtles burrow into soft ground. There will be no clearing or grubbing activities permitted between November 1st and April 1st unless the area is searched prior to October 15th by the Office of Environmental Planning (OEP) and exclusionary practices are immediately put into place around the site.

    If work must be done during the Eastern box turtle's active period (April 1st to November 1st) the Department will require precautionary measures to protect the Eastern box turtle and Eastern box turtle habitat. All construction activities taking place within the turtle's active period will need to be coordinated with the Department.

    The Contractor shall through the Engineer at least 10 days prior to the commencement of any construction activities, arrange for a CT DOT Environmental Inspector from the OEP or their authorized delegate to be available to meet and discuss proper protocol for maintaining environmental commitments made to the protection of this species and habitat. OEP will provide oversight through the District to ensure that the following protocols are followed and maintained during the course of the Project:

    a. Exclusionary practices will be required where wetlands are present in order to prevent any turtle access into construction areas. These measures will need to be installed at the limits of disturbance as shown on the plans.

    b. All staging and storage areas, outside of previously paved locations, regardless of the duration of time they will be utilized, must be reviewed by and receive written approval from OEP through the District.

    c. All construction personnel working within the Eastern box turtle habitat must be apprised of the species description and the possible presence of a listed species.

    d. In areas where silt fence is used for exclusion, it shall be removed as soon as the area is stable to allow for reptile and amphibian passage to resume.

e. Any Eastern box turtles encountered within the immediate work area shall be carefully moved to an adjacent area outside of the excluded area and the field inspector must immediately contact OEP with the location.

f. No heavy machinery or vehicles may be parked in any Eastern box turtle habitat.

g. Special precautions must be taken to avoid degradation of wetland habitats including any wet meadows and seasonal pools.

h. The Contractor must search the work area each morning prior to any work being done.

This species is protected by state laws which prohibit killing, harming, taking, or keeping them in your possession. Workers shall be notified of the existence of Eastern box turtles in this area and be apprised of the laws protecting them. Photographs and the laws protecting Eastern box turtles (species ID sheets will be provided by OEP) shall be posted in the Contractor's and DOT field office. Any observations of this species are to be immediately reported to OEP at (860) 594-2937 or (860) 594-2938.

SECTION 4.06 - BITUMINOUS CONCRETE

Section 4.06 is being deleted in its entirety and replaced with the following:

4.06.01—Description
4.06.02—Materials
4.06.03—Construction Methods
4.06.04—Method of Measurement
4.06.05—Basis of Payment

4.06.01—Description: Work under this section shall include the production, delivery and placement of a non-segregated, smooth and dense bituminous concrete mixture brought to proper grade and cross section. This section shall also include the method and construction of longitudinal joints. The Contractor shall furnish ConnDOT with a Quality Control Plan (QCP) as described in Article 4.06.03.

The terms listed below as used in this specification are defined as:

Bituminous Concrete: A concrete material that uses a bituminous material (typically asphalt) as the binding agent and stone and sand as the principal aggregate components. Bituminous concrete may also contain any of a number of additives engineered to modify specific properties and/or behavior of the concrete material. For the purposes of this Specification, references to bituminous concrete apply to all of its sub-categories, for instance those defined on the basis of production and placement temperatures, such as hot-mix asphalt (HMA) or warm-mix asphalt (WMA), or those defined on the basis of composition, such as those containing polymer-modified asphalt (PMA).

Course: A lift or multiple lifts comprised of the same bituminous concrete mixture placed as part of the pavement structure.

Density Lot: All material placed in a single lift and as defined in Article 4.06.03.

Disintegration: Wearing away or fragmentation of the pavement. Disintegration will be evident in the following forms: Polishing, weathering-oxidizing, scaling, spalling, raveling, potholes or loss of material.

Dispute Resolution: A procedure used to resolve conflicts resulting from discrepancies between the Engineer and the Contractor's density results that may affect payment.

Hot Mix Asphalt (HMA): A bituminous concrete mixture typically produced at 325°F.

Lift: An application of a bituminous concrete mixture placed and compacted to a specified thickness in a single paver pass.

Polymer Modified Asphalt (PMA): A bituminous concrete mixture containing a polymer modified asphalt binder in accordance with contract specifications. All PMA mixtures shall incorporate a qualified warm mix technology.

Production Lot: All material placed during a continuous daily paving operation.

Quality Assurance (QA): All those planned and systematic actions necessary to provide confidence that a product or facility will perform as designed.

Quality Control (QC): The sum total of activities performed by the vendor (Producer, Manufacturer, and Contractor) to ensure that a product meets contract specification requirements.

Superpave: A bituminous concrete mix design used in mixtures designated as "S*" Where "S" indicates Superpave and * indicates the sieve related to the nominal maximum aggregate size of the mix.

Segregation: A non-uniform distribution of a bituminous concrete mixture in terms of gradation, temperature, or volumetric properties.

Warm Mix Asphalt (WMA): A bituminous concrete mixture that can be produced and placed at reduced temperatures than HMA using a qualified additive or technology.

4.06.02—Materials: All materials shall conform to the requirements of Section M.04.

1. Materials Supply: The bituminous concrete mixture must be from one source of supply and originate from one Plant unless authorized by the Engineer. Bituminous Concrete plant QCP requirements are defined in Section M.04.

2. Recycled Materials: Reclaimed Asphalt Pavement (RAP), Crushed Recycled Container Glass (CRCG), Recycled Asphalt Shingles (RAS), or crumb rubber (CR) from recycled tires may be incorporated in bituminous concrete mixtures in accordance with Section M.04 and Project Specifications. CRCG and RAS shall not be used in the surface course.

4.06.03—Construction Methods:

1. Material Documentation: All vendors producing bituminous concrete must have their truck-weighing scales, storage scales, and mixing plant automated to provide a detailed ticket.

Delivery tickets shall include the following information:

a. State of Connecticut printed on ticket.
b. Name of producer, identification of plant, and specific storage bin (silo) if used.
c. Date and time of day.

d. Mixture Designation; Mix type and level Curb mixtures for machine-placed curbing must state "curb mix only".
e. If RAP is used, the plant printouts shall include the RAP dry weight, percentage and daily moisture content.
f. If RAS is used, the plant printouts shall include the RAS dry weight and percentage daily moisture content.
g. The delivery ticket for all mixes produced with Warm Mix Technology must indicate the additive name, and the injection rate (water or additive) incorporated at the HMA plant. The delivery ticket for all mixes produced with pre-blended WMA additive must indicate the name of the WMA Technology.
h. Net weight of mixture loaded into truck (When RAP and/or RAS is used the moisture content shall be excluded from mixture net weight).
i. Gross weight (Either equal to the net weight plus the tare weight or the loaded scale weight).
j. Tare weight of truck – Daily scale weight.
k. Project number, purchase order number, name of Contractor (if Contractor other than Producer).
l. Truck number for specific identification of truck.
m. Individual aggregate, Recycled Materials, and virgin asphalt high/target/low weights. For drum plants and silo loadings, the plant printouts shall be produced at 5 minute intervals maintained by the vendor for a period of three years after the completion of the project.
n. For every mixture designation the running daily total delivered and sequential load number.

The net weight of mixture loaded into the truck must be equal to the cumulative measured weight of its components.

The Contractor must notify the Engineer immediately if, during the production day, there is a malfunction of the weighing or recording system in the automated plant or truck-weighing scales. Manually written tickets containing all required information will be allowed for one hour, but for no longer, provided that each load is weighed on State-approved scales. At the Engineer's sole discretion, trucks may be approved to leave the plant if a State inspector is present to monitor weighing. If such a malfunction is not fixed within forty-eight hours, mixture will not be approved to leave the plant until the system is fixed to the Engineer's satisfaction. No damages will be considered should the State be unable to provide an inspector at the plant.

The State reserves the right to have an inspector present to monitor batching and /or weighing operations.

2. Transportation of Mixture: Trucks with loads of bituminous concrete being delivered to State projects must not exceed the statutory or permitted load limits referred to as gross vehicle weight (GVW). The Contractor shall furnish a list of all vehicles and allowable weights transporting mixture.

The State reserves the right to check the gross and tare weight of any delivery truck. A variation of 0.4 percent or less in the gross or tare weight shown on the delivery ticket and the certified scale weight shall be considered evidence that the weight shown on the delivery ticket is correct. If the gross or tare weight varies from that shown on the delivery ticket by more than 0.4 percent, the Engineer will recalculate the net weight. The Contractor shall take action to correct discrepancy to the satisfaction of the Engineer.

If a truck delivers mixture to the project and the ticket indicates that the truck is overweight, the load will not be rejected but a "Measured Weight Adjustment" will be taken in accordance with Article 4.06.04.

The mixture shall be transported from the mixing plant in trucks that have previously been cleaned of all foreign material and that have no gaps through which mixture might inadvertently escape. The Contractor shall take care in loading trucks uniformly so that segregation is minimized. Loaded trucks shall be tightly covered with waterproof covers acceptable to the Engineer. Mesh covers are prohibited. The front and rear of the cover must be fastened to minimize air infiltration. The Contractor shall assure that all trucks are in conformance with this specification. Trucks found not to be in conformance shall not be allowed to be loaded until re-inspected to the satisfaction of the Engineer.

Truck body coating and cleaning agents must not have a deleterious effect on the transported mixture. The use of solvents or fuel oil, in any concentration, is strictly prohibited for the coating of the inside of truck bodies. When acceptable coating or agents are applied, truck bodies shall be raised immediately prior to loading to remove any excess agent in an environmentally acceptable manner.

3. Paving Equipment: The Contractor shall have the necessary paving and compaction equipment at the project site to perform the work. All equipment shall be in good working order and any equipment that is worn, defective or inadequate for performance of the work shall be repaired or replaced by the Contractor to the satisfaction of the Engineer. During the paving operation, the use of solvents or fuel oil, in any concentration, is strictly prohibited as a release agent or cleaner on any paving equipment (i.e., rollers, pavers, transfer devices, etc.).

Refueling of equipment is prohibited in any location on the paving project where fuel might come in contact with bituminous concrete mixtures already placed or to be placed. Solvents for use in cleaning mechanical equipment or hand tools shall be stored clear of areas paved or to be paved. Before any such equipment and tools are cleaned, they shall be moved off the paved or to be paved area; and they shall not be returned for use until after they have been allowed to dry.

Pavers: Each paver shall have a receiving hopper with sufficient capacity to provide for a uniform spreading operation and a distribution system that places the mix uniformly, without segregation. The paver shall be equipped with and use a vibratory screed system with heaters or burners. The screed system shall be capable of producing a finished surface of the required evenness and texture without tearing, shoving, or gouging the mixture. Pavers with extendible

screed units as part of the system shall have auger extensions and tunnel extenders as necessary. Automatic screed controls for grade and slope shall be used at all times unless otherwise authorized by the Engineer. The controls shall automatically adjust the screed to compensate for irregularities in the preceding course or existing base. The controls shall maintain the proper transverse slope and be readily adjustable, and shall operate from a fixed or moving reference such as a grade wire or floating beam.

Rollers: All rollers shall be self-propelled and designed for compaction of bituminous concrete. Rollers types shall include steel-wheeled, pneumatic or a combination thereof and may be capable of operating in a static or dynamic mode. Rollers that operate in a dynamic mode shall have drums that use a vibratory or oscillatory system or combination of. The vibratory system achieves compaction through vertical amplitude forces. Rollers with this system shall be equipped with indicators that provide the operator with amplitude, frequency and speed settings/readouts to measure the impacts per foot during the compaction process. The oscillatory system achieves compaction through horizontal shear forces. Rollers with this system shall be equipped with frequency indicators. Rollers can operate in the dynamic mode using the oscillatory system on concrete structures such as bridges and catch basins if at the lowest frequency setting.

Pneumatic tire rollers shall be self-propelled and equipped with wide-tread compaction tires capable of exerting an average contact pressure from 60 to 90 pounds per square inch uniformly over the surface, adjusting ballast and tire inflation pressure as required. The Contractor shall furnish evidence regarding tire size; pressure and loading to confirm that the proper contact pressure is being developed and that the loading and contact pressure is uniform for all wheels.

Lighting: For paving operations, which will be performed during hours of darkness, the paving equipment shall be equipped with lighting fixtures as described below, or with approved lighting fixtures of equivalent light output characteristics. Lighting shall maximize the illumination on each task and minimize glare to passing traffic. The Contractor shall provide generators on rollers and pavers of the type, size, and wattage, to adequately furnish electric power to operate the specified lighting equipment. The lighting options and minimum number of fixtures are listed in Tables 4.06-1 and 4.06-2:

TABLE 4.06-1: Paver Lighting

Option	Fixture Configuration	Fixture Quantity	Requirement
1	Type A	3	Mount over screed area
	Type B (narrow) or Type C (spot)	2	Aim to auger and guideline
	Type B (wide) or Type C (flood)	2	Aim 25 feet behind paving machine
2	Type D Balloon	2	Mount over screed area

TABLE 4.06-2: Roller Lighting

Option	Fixture Configuration*	Fixture Quantity	Requirement
1	Type B (wide)	2	Aim 50 feet in front of and behind roller
	Type B (narrow)	2	Aim 100 feet in front of and behind roller
2	Type C (flood)	2	Aim 50 feet in front of and behind roller
	Type C (spot)	2	Aim 100 feet in front of and behind roller
3	Type D Balloon	1	Mount above the roller

*All fixtures shall be mounted above the roller.

Type A: Fluorescent fixture shall be heavy-duty industrial type. Each fixture shall have a minimum output of 8,000 lumens. The fixtures shall be mounted horizontally, and be designed for continuous row installation.

Type B: Each floodlight fixture shall have a minimum output of 18,000 lumens.

Type C: Each fixture shall have a minimum output of 19,000 lumens.

Type D: Balloon light: Each balloon light fixture shall have a minimum output of 50,000 lumens, and emit light equally in all directions.

Material Transfer Vehicle (MTV): A MTV shall be used when placing a bituminous concrete surface course as indicated in the contract documents. A surface course is defined as the total thickness of the same bituminous concrete mix that extends up to and includes the final wearing surface whether it is placed in a single or multiple lifts, and regardless of any time delays between lifts.

The MTV must be a self-propelled vehicle specifically designed for the purpose of delivering the bituminous concrete mixture from the delivery truck to the paver. The MTV must continuously remix the bituminous concrete mixture throughout the placement process.

The use of a MTV will be subject to the requirements stated in Article 1.07.05- Load Restrictions. The Engineer may limit the use of the vehicle if it is determined that the use of the MTV may damage highway components, utilities, or bridges. The Contractor shall submit to the Engineer at time of pre-construction the following information:

- The make and model of the MTV to be used.
- The individual axle weights and axle spacing for each separate piece of paving equipment (haul vehicle, MTV and paver).
- A working drawing showing the axle spacing in combination with all three pieces of equipment that will comprise the paving echelon.

4. Test Section: The Engineer may require the Contractor to place a test section whenever the requirements of this specification or Section M.04 are not met.

The Contractor shall submit the quantity of mixture to be placed and the location of the test section for review and acceptance by the Engineer. The equipment used in the construction of a passing test section shall be used throughout production.

If a test section fails to meet specifications, the Contractor shall stop production, make necessary adjustments to the job mix formula, plant operations, or procedures for placement and compaction. The Contractor shall construct test sections, as allowed by the Engineer, until all the required specifications are met. All test sections shall also be subject to removal as set forth in Article 1.06.04.

5. Transitions for Roadway Surface: Transitions shall be formed at any point on the roadway where the pavement surface deviates, vertically, from the uniform longitudinal profile as specified on the plans. Whether formed by milling or by bituminous concrete mixture, all transition lengths shall conform to the criteria below unless otherwise specified.

Permanent Transitions: A permanent transition is defined as any transition that remains as a permanent part of the work. All permanent transitions, leading and trailing ends shall meet the following length requirements:

a) Posted speed limit is greater than 35 MPH: 30 feet per inch of vertical change (thickness)
b) Posted speed limit is 35 MPH or less: 15 feet per inch of vertical change (thickness).
c) Bridge Overpass and underpass transition length will be 75 feet either
    (1) Before and after the bridge expansion joint, or
    (2) Before or after the parapet face of the overpass.

In areas where it is impractical to use the above described permanent transition lengths the use of a shorter permanent transition length may be permitted when approved by the Engineer.

Temporary Transitions: A temporary transition is defined as a transition that does not remain a permanent part of the work. All temporary transitions shall meet the following length requirements:

a) Posted speed limit is greater than 50 MPH
    (1) Leading Transitions = 15 feet per inch of vertical change (thickness)
    (2) Trailing Transitions = 6 feet per inch of vertical change (thickness)
b) Posted speed limit is 40, 45, or 50 MPH
    (1) Leading and Trailing = 4 feet per inch of vertical change (thickness)
c) Posted speed limit is 35 MPH or less
    (1) Leading and Trailing = 3 feet per inch of vertical change (thickness)

Note: Any temporary transition to be in-place over the winter shutdown period or during extended periods of inactivity (more than 14 calendar days) shall conform to the greater than 50 MPH requirements shown above.

6. Spreading and Finishing of Mixture: Prior to the placement of the bituminous concrete, the underlying base course shall be brought to the plan grade and cross section within the allowable tolerance. Immediately before placing the mixture, the area to be surfaced shall be cleaned by sweeping or by other means acceptable to the Engineer. The bituminous concrete mixture shall not be placed whenever the surface is wet or frozen. The Engineer will verify the mix temperature by means of a probe or infrared type of thermometer. A probe type thermometer, verified by the Department on an annual basis, must be used in order to reject a load of mixture based on temperatures outside the range stated in the placement QCP.

Placement: The bituminous concrete mixture shall be placed and compacted to provide a smooth, dense surface with a uniform texture and no segregation at the specified thickness and dimensions indicated in the plans and specifications.

When unforeseen weather conditions prevent further placement of the mix, the Engineer is not obligated to accept or place the bituminous concrete mixture that is in transit from the plant.

In advance of paving, traffic control requirements shall be set up daily, maintained throughout placement, and shall not be removed until all associated work including density testing is completed.

The Contractor shall inspect the newly placed pavement for defects in the mixture or placement before rolling is started. Any deviation from standard crown or section shall be immediately remedied by placing additional mixture or removing surplus mixture. Such defects shall be corrected to the satisfaction of the Engineer.

Where it is impractical due to physical limitations to operate the paving equipment, the Engineer may permit the use of other methods or equipment. Where hand spreading is permitted, the mixture shall be placed by means of suitable shovels and other tools, and in a uniformly loose layer at a thickness that will result in a completed pavement meeting the designed grade and elevation.

Placement Tolerances: Each lift of bituminous concrete placed at a uniform specified thickness shall meet the following requirements for thickness and area. Any pavement exceeding these limits shall be subject to an adjustment or removal. Lift tolerances will not relieve the Contractor from meeting the final designed grade. Lifts of specified non-uniform thickness, i.e. wedge or shim course, shall not be subject to thickness and area adjustments.

a) Thickness- Where the total thickness of the lift of mixture exceeds that shown on the plans beyond the tolerances shown in Table 4.06-3, the longitudinal limits of such variation including locations and intervals of the measurements will be documented by the Engineer for use in calculating an adjustment in accordance with Article 4.06.04.

TABLE 4.06-3: Thickness Tolerances

Mixture Designation	Lift Tolerance
S1	+/- ⅜ inch
S0.25, S0.375, S0.5	+/- ¼ inch

Where the thickness of the lift of mixture is less than that shown on the plans beyond the tolerances shown in Table 4.06-3, the Contractor, with the approval of the Engineer, shall take corrective action in accordance with this specification.

b) Area- Where the width of the lift exceeds that shown on the plans by more than the specified thickness of each lift, the longitudinal limits of such variation including locations and intervals of the measurements will be documented by the Engineer for use in calculating the adjustment in Article 4.06.04.

c) Delivered Weight of Mixture - When the delivery ticket shows that the truck exceeds the allowable gross weight for the vehicle type the quantity of tons representing the overweight amount will be documented by the Engineer for use in calculating an adjustment in accordance with Article 4.06.04.

Transverse Joints: All transverse joints shall be formed by saw-cutting a sufficient distance back from the previous run, existing bituminous concrete pavement or bituminous concrete driveways to expose the full thickness of the lift. A brush of tack coat shall be used on any cold joint immediately prior to additional bituminous concrete mixture being placed.

Tack Coat Application: Immediately before application, the area to be tacked shall be cleaned by sweeping or by other means acceptable to the Engineer. A thin uniform coating of tack coat shall be applied to the pavement immediately before overlaying and be allowed sufficient time to break (set) prior to any paving equipment or haul vehicles driving on it. All surfaces in contact with the bituminous concrete that have been in place longer than 3 calendar days shall have an application of tack coat. The tack coat shall be applied by a non-gravity pressurized spray system that results in uniform overlapping coverage at an application rate of 0.03 to 0.05 gallons per square yard for a non-milled surface and an application rate of 0.05 to 0.07 gallons per square yard for a milled surface. For areas where both milled and un-milled surfaces occur, the tack coat shall be an application rate of 0.03 to 0.05 gallons per square yard. The Engineer must approve the equipment and the method of measurement prior to use. The material for tack coat shall not be heated in excess of 160°F and shall not be further diluted.

Compaction: The Contractor shall compact the mixture to meet the density requirements as stated in Article 4.06.03 and eliminate all roller marks without displacement, shoving, cracking, or aggregate breakage.

When placing a lift with a specified thickness less than one and one-half (1 ½) inches, or a wedge course, the Contractor shall provide a minimum rolling pattern as determined by the development of a compaction curve. The procedure to be used shall be documented in the Contractor's QCP for placement and demonstrated on the first day of placement.

The use of the vibratory system on concrete structures is prohibited. When approved by the Engineer, the Contractor may operate a roller using an oscillatory system at the lowest frequency setting.

If the Engineer determines that the use of compaction equipment in the dynamic mode may damage highway components, utilities, or adjacent property, the Contractor shall provide alternate compaction equipment. The Engineer may allow the Contractor to operate rollers in the dynamic mode using the oscillatory system at the lowest frequency setting.

Rollers operating in the dynamic mode shall be shut off when changing directions.

These allowances will not relieve the Contractor from meeting pavement compaction requirements.

Surface Requirements: The pavement surface of any lift shall meet the following requirements for smoothness and uniformity. Any irregularity of the surface exceeding these requirements shall be corrected by the Contractor.

a) Smoothness- Each lift of the surface course shall not vary more than ¼ inch from a Contractor-supplied 10 foot straightedge. For all other lifts of bituminous concrete, the tolerance shall be ⅜ inch. Such tolerance will apply to all paved areas.

b) Uniformity- The paved surface of the mat and joints shall not exhibit segregation, rutting, cracking, disintegration, flushing or vary in composition as determined by the Engineer.

7. Longitudinal Joint Construction Methods: The Contractor shall use Method I- Notched Wedge Joint (see Figure 4.06-1) when constructing longitudinal joints where lift thicknesses are between 1½ and 3 inches, except for S1mixes. Method II Butt Joint (see Figure 4.06-2) shall be used for lifts less than 1½ inches or greater than 3 inches, and S1mixes. During placement of multiple lifts of bituminous concrete, the longitudinal joint shall be constructed in such a manner that it is located at least 6 inches from the joint in the lift immediately below. The joint in the final lift shall be at the centerline or at lane lines. Each longitudinal joint shall maintain a consistent offset from the centerline of the roadway along its entire length. The difference in elevation between the two faces of any completed longitudinal joint shall not exceed ¼ of an inch in any location.

Method I - Notched Wedge Joint:

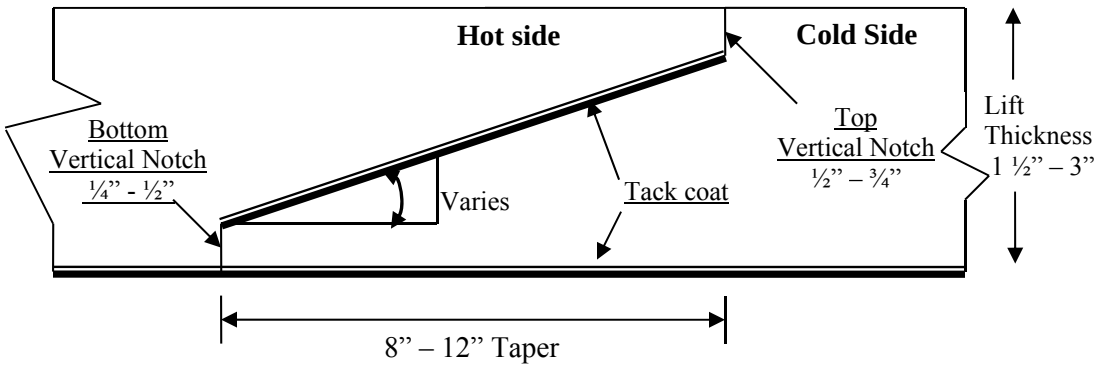

FIGURE 4.06-1: Notched Wedge Joint

A notched wedge joint shall be constructed as shown in Figure 4.06-1 using a device that is attached to the paver screed and is capable of independently adjusting the top and bottom vertical notches. The device shall have an integrated vibratory system.

The taper portion of the wedge joint must be placed over the longitudinal joint in the lift immediately below. The top vertical notch must be located at the centerline or lane line in the final lift. The requirement for paving full width "curb to curb" as described in Method II may be waived if addressed in the QC plan and approved by the Engineer.

The taper portion of the wedge joint shall be evenly compacted using equipment other than the paver or notch wedge joint device.

The taper portion of the wedge joint shall not be exposed to traffic for more than 5 calendar days.

The pavement surface under the wedge joint must have an application of tack coat material. Prior to placing the completing pass (hot side), an application of tack coat must be applied to the exposed surface of the tapered section; regardless of time elapsed between paver passes. The in-place time allowance described in Sub article 4.06.03-7 does not apply to joint construction.

Any exposed wedge joint must be located to allow for the free draining of water from the road surface.

The Engineer reserves the right to define the paving limits when using a wedge joint that will be exposed to traffic.

If Method I, Notched Wedge Joint cannot be used on lifts between 1.5 and 3 inches, Method III Butt Joint may be substituted according to the requirements below for "Method III – Butt Joint with Hot Pour Rubberized Asphalt Treatment."

Method II - Butt Joint:

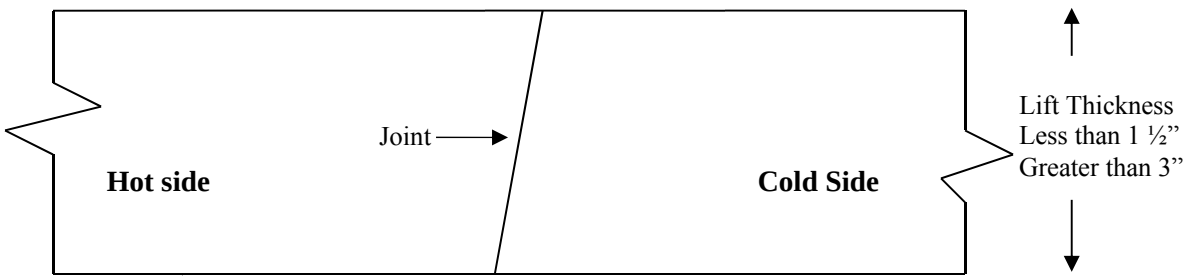

FIGURE 4.06-2: Butt Joint

When adjoining passes are placed, the Contractor shall utilize equipment that creates a near vertical edge (refer to Figure 4.06-2). The completing pass (hot side) shall have sufficient mixture so that the compacted thickness is not less than the previous pass (cold side). The end gate on the paver should be set so there is an overlap onto the cold side of the joint.

The Contractor shall not allow any butt joint to be incomplete at the end of a work shift unless otherwise allowed by the Engineer. When using this method, the Contractor is not allowed to leave a vertical edge exposed at the end of a work shift and must complete paving of the roadway full width "curb to curb."

Method III- Butt Joint with Hot Poured Rubberized Asphalt Treatment: If Method I Wedge Joint cannot be used due to physical constraints in certain limited locations; the contractor may submit a request in writing for approval by the Engineer, to utilize Method III Butt Joint as a substitution in those locations. There shall be no additional measurement or payment made when the Method III Butt Joint is substituted for the Method I Notched Wedge Joint. When required by the contract or approved by the Engineer, Method III (see Figure 4.06-3) shall be used.

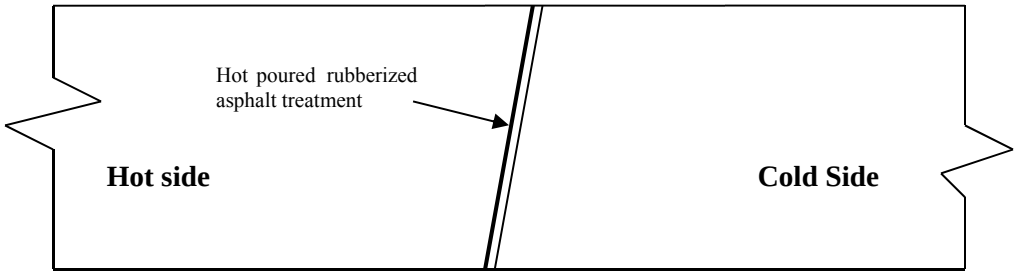

FIGURE 4.06-3: Butt Joint with Hot Poured Rubberized Asphalt Treatment

All of the requirements of Method II must be met with Method III. In addition, the longitudinal vertical edge must be treated with a rubberized joint seal material meeting the requirements of ASTM D 6690, Type 2. The joint sealant shall be placed on the face of the "cold side" of the butt joint as shown above prior to placing the "hot side" of the butt joint. The joint seal material

shall be applied in accordance with the manufacturer's recommendation so as to provide a uniform coverage and avoid excess bleeding onto the newly placed pavement.

8. Contractor Quality Control (QC) Requirements:

The Contractor shall be responsible for maintaining adequate quality control procedures throughout the production and placement operations. Therefore, the Contractor must ensure that the materials, mixture and work provided by Subcontractors, Suppliers and Producers also meet contract specification requirements.

This effort must be documented in Quality Control Plans and address the actions, inspection, or sampling and testing necessary to keep the production and placement operations in control, to determine when an operation has gone out of control and to respond to correct the situation in a timely fashion.

The Standard QCP for production shall consist of the quality control program specific to the production facility.

There are three components to the QCP for placement: a Standard QCP, a Project Summary Sheet that details project specific information, and if applicable a separate Extended Season Paving Plan as required in Section 9 "Temperature and Seasonal Requirements".

The Standard QCP for both production and placement shall be submitted to the Department for approval each calendar year and.at a minimum of 30 days prior to production or placement.

Production or placement shall not occur until all QCP components have been approved by the Engineer.

Each QCP shall include the name and qualifications of a Quality Control Manager (QCM). The QCM shall be responsible for the administration of the QCP, and any modifications that may become necessary. The QCM shall have the ability to direct all Contractor personnel on the project during paving operations. All Contractor sampling, inspection and test reports shall be reviewed and signed by the QCM prior to submittal to the Engineer. The QCPs shall also include the name and qualifications of any outside testing laboratory performing any QC functions on behalf of the Contractor.

Approval of the QCP does not relieve the Contractor of its responsibility to comply with the project specifications. The Contractor may modify the QCPs as work progresses and must document the changes in writing prior to resuming operations. These changes include but are not limited to changes in quality control procedures or personnel. The Department reserves the right to deny significant changes to the QCPs.

<u>QCP for Production:</u> Refer to Section M.04.03-1.

QCP for Placement: The Standard QCP, Project Summary Sheet, and Extended Season Paving Plan shall conform to the format provided by the Engineer. The format is available at http://www.ct.gov/dot/lib/dot/documents/dconstruction/pat/qcp_outline_hma_placement.pdf.

The Contractor shall perform all quality control sampling and testing, provide inspection, and exercise management control to ensure that bituminous concrete placement conforms to the requirements as outlined in its QCP during all phases of the work. The Contractor shall document these activities for each day of placement.

The Contractor shall submit complete field density testing and inspection records to the Engineer within 48 hours in a manner acceptable to the Engineer.

The Contractor may obtain one (1) mat core and one (1) joint core per day for process control, provided this process is detailed in the QCP. The results of these process control cores shall not be used to dispute the Department determinations from the acceptance cores. The Contractor shall submit the location of each process control core to the Engineer for approval prior to taking the core. The core holes shall be filled to the same requirements described in Sub article 4.06.03-10.

9. Temperature and Seasonal Requirements: Paving, including placement of temporary pavements, shall be divided into two seasons, "In-Season" and "Extended-Season". In-Season paving occurs from May 1 – October 14, and Extended Season paving occurs from October 15-April 30. The following requirements shall apply unless otherwise authorized or directed by the Engineer:

- Bituminous concrete mixes shall not be placed when the air or sub base temperature is below 40°F regardless of the season.
- Should paving operations be scheduled during the Extended Season, the Contractor must submit an Extended Season Paving Plan for the project that addresses minimum delivered mix temperature considering WMA, PMA or other additives, maximum paver speed, enhanced rolling patterns and the method to balance mixture delivery and placement operations. Paving during Extended Season shall not commence until the Engineer has approved the plan.

10. Density Testing of Bituminous Concrete Utilizing Core Samples: This procedure describes the frequency and the method the Contractor shall use to obtain pavement cores for acceptance from the project.

Coring shall be performed on each lift specified to a thickness of one and one-half (1 ½) inches or more. All material placed in a lift shall be compacted to the degree specified in Tables 4.06-9 and 4.06-10. The density of each core will be determined using the production lot's average maximum theoretical specific gravity (Gmm) established during the testing of the parent material at the plant. When there was no testing of the parent material or any Gmm exceeds the specified tolerances in the Department's current QA Program for Materials, the Engineer will determine

the maximum theoretical density value to be used for density calculations. Bituminous concrete HMA S1 mixes are excluded from the longitudinal joint density requirements.

The Contractor shall extract cores (4 or 6 inch diameter for S0.25, S0.375 and S0.5 mixes, 6 inch diameter for S1.0 mixtures -wet sawed) from sampling locations determined by the Engineer. The Engineer must witness the extraction and labeling of cores, as well as the filling of the core holes. The cores shall be labeled by the Contractor with the project number, lot number, and sub-lot number on the top surface of the core. When labeling the core lot number, include whether the core is from a mat lot or joint lot by using an "M" for a mat core and "J" for a joint core. For example, a core from the first sub-lot of the first mat lot shall be labeled with "Lot M1 – 1". The first number refers to the lot and the second number refers to the sub-lot. Refer to Figure 4.06-4. The side of the cores shall be labeled with the core lot number and date placed. The project inspector shall fill out a MAT-109 containing the same information to accompany the cores. The Contractor shall deliver the cores and MAT-109 to the Department's Central Testing Lab in a safe manner to ensure no damage occurs to the cores. The Contractor shall use a container approved by the Engineer. In general the container shall consist of an attached lid container made out of plastic capable of being locked shut and tamper proof. The Contractor shall use foam, bubble wrap, or another suitable material to prevent the cores from being damaged during transportation. Once the cores and MAT-109 are in the container the Engineer will secure the lid using a security seal. The security seal's identification number must be documented on the MAT-109. The Central Lab will break the security seal and take possession of the cores upon receipt.

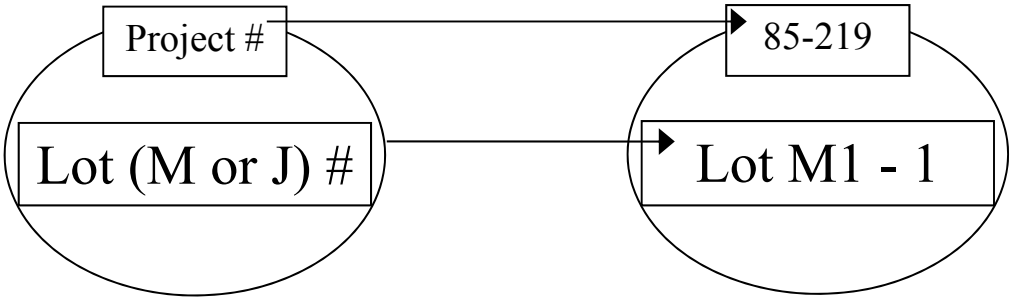

FIGURE 4.06-4: Labeling of Cores

Frequency of sampling is in accordance with the following tables:

TABLE 4.06-4: Testing Requirement for Bridge Density Lot

Length of Each Structure (Feet)	MAT – No. of Cores	JOINT - No. of cores
≤ 500'	See Table 4.06-5(A or B)	See Table 4.06-5(A or B)
501' – 1500'	3	3
1501' – 2500'	4	4
2501' and greater	5	5

All material placed on structures less than or equal to 500 feet in length shall be included as part of a standard lot as follows:

TABLE 4.06-5A: Testing requirement for Density Lots ≥ 500 Tons

Lot Type	No. of Mat Cores		No. of Joint Cores		Target Lot Size (Tons)
Lot Without Bridge[1]	4		4		2000
Lot With Bridge(s)[1][2]	4 plus	1 per structure (≤ 300')	4 plus	1 per structure (≤ 300')	2000
		2 per structure (301' – 500')		2 per structure (301' – 500')	

TABLE 4.06-5B: Testing requirement for Density Lots < 500 Tons

Lot Type	No. of Mat Cores	No. of Joint Cores	Lot Size (Tons)
Lot Without Bridge[1]	3	3	1 per lift
Lot With Bridge(s)[1][2]	3	3	1 per lift

Notes:
[1] The number of "Required Paver Passes for Full Width" shall be used to determine the sub-lot sizes within the lot. The number of paver passes for full width is determined by the contractor.
[2] If a non-bridge mat or joint core location randomly falls on a structure, the core is to be obtained on the structure in addition to the core(s) required on the structure.

A density lot will be complete when the full designed paving width of the established lot length has been completed and shall include all longitudinal joints that exist between the curb lines regardless of date(s) paved. Quantity of material placed on structures less than or equal to 500 feet long is inclusive of the standard lot. Prior to paving, the total length of the project to be paved shall be split up into lots that contain approximately 2000 tons each. Areas such as highway ramps may be combined to create one lot. In general, combined areas should be set up to target a 2000 ton lot size. One adjustment will apply for each lot. The tons shall be determined using the yield calculation in Article 4.06.04. The last lot shall be the difference between the total payable tons for the project and the sum of the previous lots.
After the compaction process has been completed, the material shall be allowed to cool sufficiently to allow the cutting and removal of the core without damage. The Contractor shall core to a depth that allows extraction so that the uppermost layer being tested for density will not be affected.

A mat core shall not be taken any closer than one foot from the edge of a paver pass. If a random number locates a core less than one foot from any edge, locate the core so that the sample is one foot from the edge.

Method I, Notched Wedge Joint cores shall be taken so that the center of the core is 5 inches from the visible joint on the hot mat side. Refer to Figure 4.06-5.

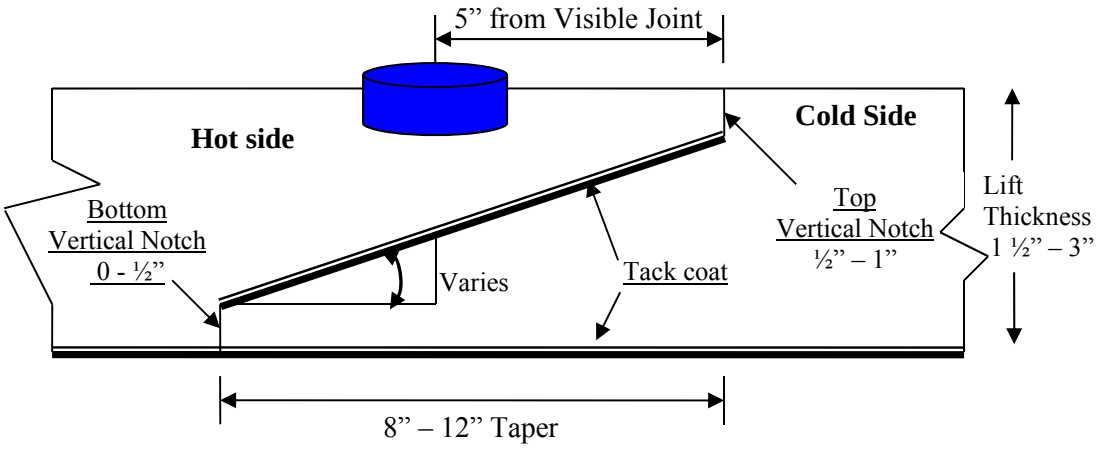

FIGURE 4.06-5: Notched Wedge Joint Cores

When Method III Butt Joint is utilized, cores shall be taken from the hot side so the edge of the core is within 1 inch of the longitudinal joint.

All cores must be cut within 5 calendar days of placement. Any core that is damaged or obviously defective while being obtained will be replaced with a new core from a location within 2 feet measured in a longitudinal direction.

Each core hole shall be filled within four hours upon core extraction. Prior to being filled, the hole shall be prepared by removing any free water and applying tack coat using a brush or other means to uniformly cover the cut surface. The core hole shall be filled using a bituminous concrete mixture at a minimum temperature of 240ºF containing the same or smaller nominal maximum aggregate size and compacted with a hand compactor or other mechanical means to the maximum compaction possible. The bituminous concrete fill shall be compacted to ⅛ inch above the finished pavement.

11. Acceptance Inspection, Sampling and Testing: Inspection, sampling, and testing to be used by the Engineer shall be performed at the minimum frequency specified in Section M.04 and stated herein.

Sampling for acceptance shall be established using ASTM D 3665, or a statistically based procedure of random sampling approved by the Engineer.

Plant Material Acceptance: The Contractor shall provide the required acceptance sampling, testing and inspection during all phases of the work in accordance with Section M.04. The Department will perform verification testing on the Contractor’s acceptance test results. Should binder content, theoretical maximum density (Gmm), or air void results exceed the specified tolerances in the Department’s current QA Program for Materials, Acceptance and Assurance Testing Policies and Procedures, the Department will investigate to determine an assignable cause. Contractor test results for a subject lot or sub lot may be replaced with the Department’s

results for the purpose of assessing adjustments. The verification procedure is included in the Department's current QA Program for Materials.

Density Acceptance: The Engineer will perform all acceptance testing on the cores in accordance with AASHTO T 331.

12. Density Dispute Resolution Process: The Contractor and Engineer will work in partnership to avoid potential conflicts and to resolve any differences that may arise during quality control or acceptance testing for density. Both parties will review their sampling and testing procedures and results and share their findings. If the Contractor disputes the Engineer's test results, the Contractor must submit in writing a request to initiate the Dispute Resolution Process within 7 calendar days of the notification of the test results. No request for dispute resolution will be allowed unless the Contractor provides quality control results within the timeframe described in Sub article 4.06.03-9 supporting its position. No request for Dispute Resolution will be allowed for a Density Lot in which any core was not taken within the required 5 calendar days of placement. Should the dispute not be resolved through evaluation of existing testing data or procedures, the Engineer may authorize the Contractor to obtain a new set of core samples per disputed lot. The core samples must be extracted no later than 14 calendar days from the date of Engineer's authorization.

The number and type (mat, joint, or structure) of the cores taken for dispute resolution must reflect the number and type of the cores taken for acceptance. The location of each core shall be randomly located within the respective original sub lot. All such core samples shall be extracted and filled using the procedure outlined in Article 4.06.03. The results from the dispute resolution cores shall be added to the results from the acceptance cores and averaged for determining the final in-place density value.

13. Corrective Work Procedures: Any portion of the completed pavement that does not meet the requirements of the specification shall be corrected at the expense of the Contractor. Any corrective courses placed as the final wearing surface shall match the specified lift thickness after compaction.

If pavement placed by the Contractor does not meet the specifications, and the Engineer requires its replacement or correction, the Contractor shall:

a) Propose a corrective procedure to the Engineer for review and approval prior to any corrective work commencing. The proposal shall include:
   - Limits of pavement to be replaced or corrected, indicating stationing or other landmarks that are readily distinguishable.
   - Proposed work schedule.
   - Construction method and sequence of operations.
   - Methods of maintenance and protection of traffic.
   - Material sources.
   - Names and telephone numbers of supervising personnel.

b) Perform all corrective work in accordance with the Contract and the approved corrective procedure.

14. Protection of the Work: The Contractor shall protect all sections of the newly finished pavement from damage that may occur as a result of the Contractor's operations for the duration of the Project. Prior to the Engineer's authorization to open the pavement to traffic, the Contractor is responsible to protect the pavement from damage.

15. Cut Bituminous Concrete Pavement: Work under this item shall consist of making a straight-line cut in the bituminous concrete pavement to the lines delineated on the plans or as directed by the Engineer. The cut shall provide a straight, clean, vertical face with no cracking, tearing or breakage along the cut edge.

4.06.04—Method of Measurement:

1. HMA S* or PMA S*: The quantity of bituminous concrete measured for payment will be determined by the documented net weight in tons accepted by the Engineer in accordance with this specification and Section M.04.

2. Adjustments: Adjustments may be applied to bituminous concrete quantities and will be measured for payment using the following formulas:

Yield Factor for Adjustment Calculation = 0.0575 Tons/SY/inch

Actual Area = [(Measured Length (ft)) x (Avg. of width measurements (ft))]

Actual Thickness (t) = Total tons delivered / [Actual Area (SY) x 0.0575 Tons/SY/inch]

a) Area: If the average width exceeds the allowable tolerance, an adjustment will be made using the following formula. The tolerance for width is equal to the specified thickness (in.) of the lift being placed.

Tons Adjusted for Area (T_A) = $[(L \times W_{adj})/9] \times (t) \times 0.0575$ Tons/SY/inch = (-) Tons

Where: L = Length (ft)
(t) = Actual thickness (inches)
W_{adj} = (Designed width (ft) + tolerance /12) - Measured Width)

b) Thickness: If the actual thickness is less than the allowable tolerance, the Contractor shall submit a repair procedure to the Engineer for approval. If the actual thickness exceeds the allowable tolerance, an adjustment will be made using the following formula:

Tons Adjusted for Thickness (T_T) = $A \times t_{adj} \times 0.0575$ = (-) Tons

Where: A = Area = {[L x (Designed width + tolerance (lift thickness)/12)] / 9}
t_{adj} = Adjusted thickness = [(Dt + tolerance) - Actual thickness]
Dt = Designed thickness (inches)

c) Weight: If the quantity of bituminous concrete representing the mixture delivered to the project is in excess of the allowable gross vehicle weight (GVW) for each vehicle, an adjustment will be made using the following formula:

Tons Adjusted for Weight (T_W) = GVW – DGW= (-) Tons

Where: DGW = Delivered gross weight as shown on the delivery ticket or measured on a certified scale.

d) Mixture Adjustment: The quantity of bituminous concrete representing the production lot will be adjusted based on test results and values listed in Tables 4.06-6 and 4.06-7 , . The Department's Division of Material Testing will calculate the daily adjustment value for T_{SD}.

The adjustment values in Table 4.06-6 and 4.06-7 shall be calculated for each sub lot based on the Air Void and Liquid Binder Content test results for that sub lot. The total adjustment for each day's production (lot) will be computed using tables and the following formulas:

Tons Adjusted for Superpave Design (T_{SD}) = $[(AdjAV_t + AdjPB_t) / 100]$ X Tons

Percent Adjustment for Air Voids = $AdjAV_t = [AdjAV_1 + AdjAV_2 + AdjAV_i + \ldots + AdjAV_n)] /n$

Where: $AdjAV_t$ = Total percent air void adjustment value for the lot
$AdjAV_i$ = Adjustment value from Table 4.06-7 resulting from each sub lot or the average of the adjustment values resulting from multiple tests within a sub lot, as approved by the Engineer.
n = number of sub lots based on Table M.04.03-1

TABLE 4.06-6: Adjustment Values for Air Voids

Adjustment Value ($AdjAV_i$) (%)	S0.25, S0.375, S0.5, S1 Air Voids (AV)
+2.5	3.8 - 4.2
+3.125*(AV-3)	3.0 - 3.7
-3.125*(AV-5)	4.3 – 5.0
20*(AV-3)	2.3 – 2.9
-20*(AV-5)	5.1 – 5.7
-20.0	$\leq$ 2.2 or $\geq$ 5.8

Positive air void adjustment values will not be calculated for any test that fails to meet gradation or binder content tolerances of the JMF in Table M.04.03– 5.

Percent Adjustment for Liquid Binder = $AdjPB_t = [(AdjPB_1 + AdjPB_2 + AdjPB_i + \ldots + AdjPB_n)] / n$

Where: $AdjPB_t$= Total percent liquid binder adjustment value for the lot
$AdjPB_i$ = Adjustment value from Table 4.06-7 resulting from each sub lot
n = number of binder tests in a production lot

TABLE 4.06-7: Adjustment Values for Binder Content

Adjustment Value ($AdjAV_i$) (%)	**S0.25, S0.375, S0.5, S1 Pb (refer to Table M.04.02-5)**
0.0	Equal to or above the min. liquid content
- 10.0	Below the min. liquid content

e) Density Adjustment: The quantity of bituminous concrete measured for payment in a lift of pavement specified to be 1½ inches or greater may be adjusted for density. Separate density adjustments will be made for each lot and will not be combined to establish one density adjustment. If either the Mat or Joint adjustment value is "remove and replace", the density lot shall be removed and replaced (curb to curb).

No positive adjustment will be applied to a Density Lot in which any core was not taken within the required 5 calendar days of placement.

Tons Adjusted for Density (T_D) = $[\{(PA_M \times .50) + (PA_J \times .50)\} / 100]$ X Density Lot Tons

Where: T_D = Total tons adjusted for density for each lot
PA_M = Mat density percent adjustment from Table 4.06-9
PA_J = Joint density percent adjustment from Table 4.06-10

TABLE 4.06-9: Adjustment Values for Pavement Mat density

Average Core Result Percent Mat Density	**Percent Adjustment (Bridge and Non-Bridge) (1)(2)**
97.1 - 100	-1.667*(ACRPD-98.5)
94.5 – 97.0	+2.5
93.5 – 94.4	+2.5*(ACRPD-93.5)
92.0 – 93.4	0
90.0 – 91.9	-5*(92-ACRPD)
88.0 – 89.9	-10*(91-ACRPD)
87.0 – 87.9	-30
86.9 or less	Remove and Replace (curb to curb)

TABLE 4.06-10: Adjustment Values for Pavement Joint Density

Average Core Result Percent Joint Density	Percent Adjustment (Bridge and Non-Bridge) [(1)(2)]
97.1 – 100	-1.667*(ACRPD-98.5)
93.5 – 97.0	+2.5
92.0 – 93.4	+1.667*(ACRPD-92)
91.0 – 91.9	0
89.0 – 90.9	-7.5*(91-ACRPD)
88.0 – 88.9	-15*(90-ACRPD)
87.0 – 87.9	-30
86.9 or less	Remove and Replace (curb to curb)

[(1)] ACRPD = Average Core Result Percent Density
[(2)] All Percent Adjustments to be rounded to the second decimal place. For example, 1.667 is to be rounded to 1.67.

3. Transitions for Roadway Surface: The installation of permanent transitions shall be measured under the appropriate item used in the formation of the transition.

The quantity of material used for the installation of temporary transitions shall be measured for payment under the appropriate item used in the formation of the transition. The installation and removal of a bond breaker, and the removal and disposal of any temporary transition formed by milling or with bituminous concrete pavement is not measured for payment.

4. Cut Bituminous Concrete Pavement: The quantity of bituminous concrete pavement cut will be measured in accordance with Article 2.02.04.

5. Material for Tack Coat: The quantity of tack coat will be measured for payment by the number of gallons furnished and applied on the Project and approved by the Engineer. No tack coat material shall be included that is placed in excess of the tolerance described in Article 4.06.03.

Method of Measurement:

a. Container Method- Material furnished in a container will be measured to the nearest ½ gallon. The volume will be determined by either measuring the volume in the original container by a method approved by the Engineer or using a separate graduated container capable of measuring the volume to the nearest ½ gallon. The container in which the material is furnished must include the description of material, including lot number or batch number and manufacturer or product source.

b. Truck Method- The Engineer will establish a weight per gallon of the tack coat based on the density at 60ºF for the material furnished. The number of gallons furnished will be determined by weighing the material on scales furnished by and at the expense of the Contractor, or from the automated metering system on the delivery vehicle.

6. Material Transfer Vehicle (MTV): The furnishing and use of a MTV will be measured separately for payment based on the actual number of surface course tons delivered to a paver using the MTV.

4.06.05—Basis of Payment:

1. HMA S* or PMA S*: The furnishing and placing of bituminous concrete will be paid for at the Contract unit price per ton for "HMA S*" or "PMA S*".

- All costs associated with providing illumination of the work area are included in the general cost of the work.
- All costs associated with cleaning the surface to be paved, including mechanical sweeping, are included in the general cost of the work. All costs associated with constructing longitudinal joints are included in the general cost of the work.
- All costs associated with obtaining cores for acceptance testing and dispute resolution are included in the general cost of the work.

2. Bituminous Concrete Adjustment Costs: The adjustment will be calculated using the formulas shown below if all of the measured adjustments in Article 4.06.04 are not equal to zero. A positive or negative adjustment will be applied to monies due the Contractor.

Production Lot: $[T_T + T_A + T_W + (T_{MD} \text{ or } T_{SD})] \times \text{Unit Price} = \text{Est. (P)}$

Density Lot: $T_D \times \text{Unit Price} = \text{Est. (D)}$

Where: Unit Price = Contract unit price per ton per type of mixture

T_* = Total tons of each adjustment calculated in Article 4.06.04

Est. ( ) = Pay Unit represented in dollars representing incentive or disincentive.

The Bituminous Concrete Adjustment Cost item if included in the bid proposal or estimate is not to be altered in any manner by the Contractor. If the Contractor should alter the amount shown, the altered figure will be disregarded and the original estimated cost will be used for the Contract.

3. Transitions for Roadway Surface: The installation of permanent transitions shall be paid under the appropriate item used in the formation of the transition. The quantity of material used for the installation of temporary transitions shall be paid under the appropriate pay item used in the formation of the transition. The installation and removal of a bond breaker, and the removal and disposal of any temporary transition formed by milling or with bituminous concrete pavement is included in the general cost of the work.

4. The cutting of bituminous concrete pavement will be paid in accordance with Article 2.02.05.

5. Material for tack coat will be paid for at the Contract unit price per gallon for "Material for Tack Coat".

6. The Material Transfer Vehicle (MTV) will be paid at the Contract unit price per ton for a "Material Transfer Vehicle".

Pay Item*	Pay Unit*
HMA S*	ton
PMA S*	ton
Bituminous Concrete Adjustment Cost	est.
Material for Tack Coat	gal.
Material Transfer Vehicle	ton

*For contracts administered by the State of Connecticut, Department of Administrative Services, the pay items and pay units are as shown in contract award price schedule.

SECTION 5.03 - REMOVAL OF AND ALTERATIONS TO EXISTING BRIDGES

Section 5.03 is hereby amended as follows:

5.14.01 – Description:

Delete the first two paragraphs and replace with the following:

"Work under this item shall consist of the removal and satisfactory disposal of the superstructure. Those items to be removed and disposed of shall include, but not be limited to, steel beams, diaphragms, concrete deck, curbs, parapets, bituminous wearing surface, metal bridge rail, under bridge utilities within the limits shown on the plans, bearings and bridge mounted sign structures as shown on the plans or as directed by the Engineer.

Work under this item shall also consist of removing, containing, and collecting existing paint from all areas of steel superstructures where the Contractor will use flame cutting, arc gouging, or welding for the superstructure demolition, because of the possible presence of lead in the existing paint. The lead removal is required to comply with OSHA Regulation Nos. 1926.353, 1926.354, and 1926.62. Additional information on lead removal and definitions of the terms used within this special provision may be obtained from the latest edition of the "SSPC 6I Guide for Containing Debris Generated During Paint Removal Operations."

Work under this item also consists of storage of the paint debris collected under this item."

5.03.03 – Construction Methods:

Add the following at the end of the Article:

"1 - Amount of Paint Removal: Prior to applying the heat of welding equipment to localized areas of steel superstructures, the existing paint shall be removed to a minimum of 6 inches from wherever the heat will be applied, and as directed by the Engineer.

2 - Methods of Paint Removal: Where required, the existing paint shall be removed by chemical stripping, needle guns with vacuum attachments, or by any of the closed abrasive blast cleaning techniques described in SSPC Guide 6I. Open abrasive blast cleaning will not be permitted. All of the debris resulting from the paint removal operations shall be contained, collected, and stored in leakproof storage containers placed on wooden pallets. A test patch shall be done on the existing steel to demonstrate the Contractor's proposed methods of paint removal to the satisfaction of the Engineer.

The Contractor is advised that chemical paint removers may require several days and multiple applications to completely remove the existing paint, especially in temperatures below 64ºF.

The Contractor is also advised that chemical paint strippers may not be effective in removing some paints.

3 - Removal of Superstructure: All work shall proceed as directed by and to the satisfaction of the Engineer in accordance with the details shown on the plans and the requirements of the Special Provisions "Maintenance and Protection of Traffic" and "Prosecution and Progress", contained elsewhere in these Specifications.

Material that is not specified for salvage shall become the property of the Contractor and shall be removed and disposed of by him.

Material designated for salvage shall be removed by methods that shall not cause damage to the salvaged material.

The removal shall not result in damage to any permanent construction (new or existing) or to adjoining property. If any damage does occur it shall be repaired by the Contractor to the satisfaction of the Engineer at no additional expense to the State. The Contractor shall also provide adequate measures to prevent any debris, materials, or equipment from entering the stream below the bridge deck during construction.

The Contractor shall prepare and submit to the Engineer for review working drawings, computations, and written procedures for the removal of the existing deck and beams to the Engineer for review in accordance with Article 1.05.02. These procedures shall also explain how the Contractor will contain any debris from falling into the stream during the removal of the superstructure and saw-cutting procedures. Acceptance of the Contractor's plans shall not be considered as relieving the Contractor of any responsibility."

5.03.04 – Method of Measurement:

Delete the entire article and replace with the following:

"This work, being paid for on a lump sum basis, will not be measured for payment."

5.03.05 – Basis of Payment:

Delete the second and third paragraphs and replace with the following:

"This work will be paid for at the contract lump sum price for "Removal of Superstructure", which price shall include the removal and disposal of the superstructure components, the containment, removal, collection, and storage of paint debris as herein described, the containment of all construction debris from falling into the stream, and all equipment, tools and labor incidental thereto."

SECTION 12.00 - GENERAL CLAUSES FOR HIGHWAY SIGNING

Description:

Work under this item shall conform to the requirements of Section 12.00 supplemented as follows:

12.00.06 – Data Labels:

For the purpose of developing and maintaining a highway sign inventory and for the purpose of sampling and testing reflective sheeting, the Contractor shall affix a Data Label(s) to the back of each sign face-extruded aluminum sign and each sign face-sheet aluminum sign in the vicinity of the lower left hand corner or quadrant. Data Labels shall be 2 (two) separate 5 (five) inch by 3 (three) inch (125mm by 75mm), non-reflective weatherproof films with black copy on a yellow background having a pressure sensitive adhesive backing.

A "Fabrication" Data Label is to include information about the sign fabricator, date of fabrication and the sheeting manufacturer - type. An "Installation" Data Label is to include The State Project Number or Maintenance Permit Number that installed the sign and date of installation.

The cost of the data labels coded and in place on the sign shall be included in the unit cost of the respective sign material. Payment for the respective quantities of each sign face-extruded aluminum sign and each sign face-sheet aluminum sign may be withheld until all Data Label(s) have been installed to the satisfaction of the Engineer.

The Data Label designs, with additional notes relative to design requirements are attached herewith.

12.00.07 – Global Positioning System (GPS) coordinates for signs:

The Contractor shall obtain and provide to the Engineer sign installation data, including Global Positioning System (GPS) latitude and longitude coordinates, for all new permanent signs (temporary and construction signs are not to be included) installed in the project. The Engineer shall forward the sign data to the Division of Traffic Engineering. The horizontal datum is to be set to the State Plane Coordinate System, North American Datum of 1983 (NAD83) in feet. The minimum tolerance must be within 10 feet. The format of the GPS information shall be provided in a Microsoft Office compatible spreadsheet (Excel) file with data for each sign. The record for each sign installed is to be compatible with the anticipated CTDOT Sign Inventory and Management System (CTSIMS). The following format shall be used. However, the data fields noted by "#" are not required for the project submission. These entries will be completed as part of the Traffic Engineering CTSIMS data upload.

The cost of this work shall be included in the cost of the respective sign face – sheet aluminum and sign face – extruded aluminum items. The receipt of this electronic database must be received and accepted by the Engineer prior to final payment for items involving permanent highway signing. The electronic database information shall detail information regarding the sign actually installed by the project.

	Field Number	Type	size	Description
	1	text	20	Record Number (starting at 1…)
	2	text	20	Sign Catalog Number
#	3	text	10	Size Height
#	4	text	10	Size Width
	5	text	25	Legend
#	6	text	10	Background Color
#	7	text	10	Copy Color
	8	Link	25	Material (see acceptable categories)
	9	text	30	Comments if any
#	10	text	20	MUTCD Type
	11	text	15	Town
	12	text	5	Route
	13	text	5	Route direction
#	14	text	10	Highway Log Mileage
	15	text	15	Latitude
	16	text	15	Longitude
	17	text	25	Mounting Type
	18	text	25	Reflective Sheeting Type
	19	date	25	Date Installed
	20	text	10	Number of Posts
	21	text	255	Sheeting Manufacturer name and address
	22	text	15	State Project Number (or)
	23	text	15	Encroachment Permit number.
	24	Graphic	*	Sign Picture Graphic.

* Graphics provided shall be representative of the sign supplied and be in color. Graphic formats shall be either JPG or TIFF and provided with a recommended pixel density of 800 x 600. The graphic shall be inserted in the supplied media in field 24 for each sign.

DATA LABELS

NON REFLECTIVE, WEATHERPROOF FILM
BLACK COPY, YELLOW BACKGROUND

CONN DOT
SIGN FACE DATA LABEL

Fabricator: (Insert NAME or State)
Sheeting Manufacturer - Type
(Insert NAME - TYPE)

Date Fabricated - Month / Year

J	F	M	A	M	J	J	A	S	O	N	D
12	13	14	15	16	17	18	19	20	21	22	23

CONN DOT
SIGN FACE DATA LABEL

Installed By:
Project No.: (Insert 000-0000 or State)
Permit No.: (Insert D_-000000)

Date Installed - Month / Year

J	F	M	A	M	J	J	A	S	O	N	D
12	13	14	15	16	17	18	19	20	21	22	23

Data Labels To Be 5 Inch By 3 Inch Each (125mm x 75mm) With Face Designs As Shown Above.

All Copy Ink Must Be Durable And Not Fade, Discolor, Or Smudge.

All Variable Legends To Be Included At Label Fabrication.

Only One "Installed By" Permit Or Project Number Should Be Provided.

Sign Fabrication And / Or Installation By State Forces, Insert "State."
The Month And Year Of Fabrication And Installation May Be Punched Or Marked Out

The Back Of The Data Label Must Contain A Pre-coated Pressure-Sensitive Adhesive Covered By A Removable Liner.
At Application, The Liner Must Be removable Without Soaking In Water Or Other Solvents.
The Adhesive Must Form A Durable Bond To Surfaces That Are Smooth, Clean, Corrosion-Free And Weather Resistant.

Completed Data Labels Must Not Discolor, Crack, Craze, Blister, Delaminate, Peel, Chalk, Or Lose Adhesion When Subjected To Temperatures From -30 Degrees to 200 Degrees Fahrenheit.

SECTION M.04 - BITUMINOUS CONCRETE

Section M.04 is being deleted in its entirety and replaced with the following:

M.04.01—Bituminous Concrete Materials and Facilities
M.04.02—Mix Design and Job Mix Formula (JMF)
M.04.03—Production Requirements

M.04.01—Bituminous Concrete Materials and Facilities: Each source of material, and facility or plant used to produce and test bituminous concrete must be qualified on an annual basis by the Engineer. Test Procedures and Specifications referenced herein are in accordance with the latest AASHTO and ASTM Standard Test Procedures and Specifications. Such references when noted with an (M) have been modified by the Engineer and are detailed in Table M.04.03-7.

The Contractor shall submit to the Engineer all sources of coarse aggregate, fine aggregate, mineral filler, PG binder, and if applicable any additives such as but not limited to anti-strip, warm mix, and polymer modifiers. The Contractor shall submit a Safety Data Sheet (SDS) for each grade of binder, and additive to be used on the Project. The Contractor shall not change any material sources without prior approval of the Engineer.

An adequate quantity of each size aggregate, mineral filler, bitumen, and additives, shall be maintained at the bituminous concrete plant site at all times while the plant is in operation to ensure that the plant can consistently produce bituminous concrete mixtures that meet the job mix formula (JMF) as specified in Article M.04.02. The quantity of such material shall be reviewed by the Engineer on an individual plant basis and is dependent upon the plant's daily production capacity. A total quantity of any material on site that amounts to less than one day's production capacity may be cause for the job mix formula to be rejected.

1. Coarse Aggregate:

a. Requirements: The coarse aggregate shall consist of clean, hard, tough, durable fragments of crushed stone or crushed gravel of uniform quality. Aggregates from multiple sources of supply must not be mixed or stored in the same stockpile.

b. Basis of Approval: The request for approval of the source of supply shall include a washed sieve analysis in accordance with AASHTO T 27. The Gsa, Gsb, and Pw_a shall be determined in accordance with AASHTO T 85. The coarse aggregate must not contain more than 1% crusher dust, sand, soft disintegrated pieces, mud, dirt, organic and other injurious materials. When tested for abrasion using AASHTO T 96, the aggregate loss must not exceed 40%. When tested for soundness using AASHTO T 104 with a magnesium sulfate solution, the coarse aggregate must not have a loss exceeding 10% at the end of 5 cycles.

For all bituminous mixtures, materials shall also meet the coarse aggregate angularity criteria as specified in Tables M.04.02-2 thru M.04.02-4 for blended aggregates retained

on the #4 sieve when tested according to ASTM D 5821. The amount of aggregate particles of the coarse aggregate blend retained on the #4 sieve that are flat and elongated shall be determined in accordance with ASTM D 4791 and shall not exceed 10% by weight when tested to a 5:1 ratio, as shown in Tables M.04.02-2 thru M.04.02-4.

2. Fine Aggregate:

a. Requirements: The fine aggregate from each source quarry/pit deposit shall consist of clean, hard, tough, rough-surfaced and angular grains of natural sand; manufactured sand prepared from washed stone screenings; stone screenings, slag or gravel; or combinations thereof, after mechanical screening or manufactured by a process approved by the Engineer. The Contractor is prohibited from mixing two or more sources of fine aggregate on the ground for the purpose of feeding into a plant.

All fine aggregate shall meet the listed criteria shown in items #1 thru #7 of Table M.04.01-1. Table M.04.01-1 indicates the quality tests and criteria required for all fine aggregate sources. Individually approved sources of supply shall not be mixed or stored in the same stockpile. The fine aggregates must be free from injurious amounts of clay, loam, and other deleterious materials.

For Superpave mixtures, in addition to the above requirements, the fine aggregate angularity shall be determined by testing the materials passing the #8 sieve in accordance with AASHTO T 304, Method A. Qualification shall be based on the criteria listed in Tables M.04.02-2 thru M.04.02-4. The fine aggregate shall also be tested for clay content as a percentage contained in materials finer than the #8 sieve in accordance with AASHTO T 176.

TABLE M.04.01-1: Fine Aggregate Criteria by Pit/Quarry Source

Item	Title	AASHTO Protocol(s)	Criteria
1	Grading	T 27 & T 11	100% Passing 3/8 inch 95% Passing the #4 min.
2	Absorption	T 84	3% maximum
3	Plasticity limits	T 90	0 or not detectable
4	L.A. Wear	T 96	50% maximum(fine agg. particle size # 8 and above)
5	Soundness by Magnesium Sulfate	T 104	20% maximum @ 5 cycles
6	Clay Lumps and Friable Particles	T 112	3% maximum
7	Deleterious Material	As determined by the Engineer	Organic or inorganic calcite, hematite, shale, clay or clay lumps, friable materials, coal-lignite, shells, loam, mica, clinkers, or organic matter (wood, etc). -Shall not contain more than 3% by mass of any individual listed constituent and not more than 5% by mass in total of all listed constituents.
8	Petrographic Analysis	ASTM C 295	Terms defined in Section M.04.01-2c.

b. Basis of Approval: A Quality Control Plan for Fine Aggregate (QCPFA) provided by the Contractor shall be submitted for review and approval for each new source documenting how conformance to Items 1 through 7 as shown in Table M.04.01-1 is monitored. The QCPFA must be resubmitted any time the process, location or manner of how the fine aggregate (FA) is manufactured changes, or as requested by the Engineer. The QCPFA must include the locations and manufacturing processing methods. The QCPFA for any source may be suspended by the Engineer due to the production of inconsistent material.

The Contractor shall submit all test results to the Engineer for review. The Contractor shall also include a washed sieve analysis in accordance with AASHTO T 27/T 11. Any fine aggregate component or final combined product shall have 100% passing the 3/8 inch sieve and a minimum of 95% passing the # 4. The Gsa, Gsb, and Pw_a shall be determined in accordance with AASHTO T 84.

The Contractor will be notified by the Engineer if any qualified source of supply fails any portion of Table M.04.01-1. One retest will be allowed for the Contractor to make corrections and/or changes to the process. If, upon retest, the material does not meet the requirements of items 1-7, additional testing will be required in accordance with item 8.

The Contractor may provide a Petrographic analysis of the material performed by a third party acceptable to the Engineer at its' own expense. The Contractor shall submit the results of the analysis with recommended changes to the manufacturing process to the Engineer. The Contractor shall submit fine aggregate samples for testing by the Engineer after the recommended changes have been made.

The Contractor may request the use of such fine aggregate on select project(s) for certain applications of bituminous concrete pavement. Such material will be monitored for a period no less than 48 months, at no cost to the State. Terms of any evaluation and suitable application will be determined by the Engineer.

3. Mineral Filler:

a. Requirements: Mineral filler shall consist of finely divided mineral matter such as rock dust, including limestone dust, slag dust, hydrated lime, hydraulic cement, or other accepted mineral matter. At the time of use it shall be freely flowing and devoid of agglomerations. Mineral filler shall be introduced and controlled at all times during production in a manner acceptable to the Engineer.

b. Basis of Approval: The request for approval of the source of supply shall include the location, manufacturing process, handling and storage methods for the material. Mineral filler shall conform to the requirements of AASHTO M 17.

4. Performance Graded Asphalt Binder:

a. General:

i Liquid PG binders shall be uniformly mixed and blended and be free of contaminants such as fuel oils and other solvents. Binders shall be properly heated and stored to prevent damage or separation.

ii. The blending at mixing plants of PG binder from different suppliers is strictly prohibited. Contractors who blend PG binders will be classified as a supplier and will be required to certify the binder in accordance with AASHTO R 26(M). The binder shall meet the requirements of AASHTO M 332 and shall be graded or verified in accordance with AASHTO R 29. The Contractor shall submit a Certified Test Report and bill of lading representing each delivery in accordance with AASHTO R 26(M). The Certified Test Report must also indicate the binder specific gravity at 77ºF; rotational viscosity at 275ºF and 329ºF and the mixing and compaction viscosity-temperature chart for each shipment.

iii. The Contractor shall submit the name(s) of personnel responsible for receipt, inspection, and record keeping of PG binder materials. Contractor plant personnel shall document specific storage tank(s) where binder will be transferred and stored until used, and provide binder samples to the Engineer upon request. The person(s) shall assure that each shipment (tanker truck) is accompanied by a statement certifying that the transport vehicle was inspected before loading and was found acceptable for the material shipped and that the binder will be free of contamination from any residual material, along with two (2) copies of the bill of lading.

iv. Basis of Approval: The request for approval of the source of supply shall list the location where the material will be manufactured, and the handling and storage methods, along with necessary certification in accordance with AASHTO R 26(M). Only suppliers/refineries that have an approved "Quality Control Plan for Performance Graded Binders" formatted in accordance with AASHTO R 26(M) will be allowed to supply PG binders to Department projects.

b. Neat Performance Grade (PG) Binder:

i. PG binder shall be classified by the supplier as a "Neat" binder for each lot and be so labeled on each bill of lading. Neat PG binders shall be free from modification with: fillers, extenders, reinforcing agents, adhesion promoters, thermoplastic polymers, acid modification and other additives such as re-refined motor oil, and shall indicate such information on each bill of lading and certified test report.

ii. The asphalt binder shall be PG 64S-22.

c. Modified Performance Grade (PG) Binder:

Unless otherwise noted, the asphalt binder shall be Performance Grade PG 64E-22 asphalt modified solely with a Styrene-Butadiene-Styrene (SBS) polymer. The polymer modifier shall be added at either the refinery or terminal and delivered to the bituminous concrete production facility as homogenous blend. The stability of the

modified binder shall be verified in accordance with ASTM D7173 using the Dynamic Shear Rheometer (DSR). The DSR G*/sin(δ) results from the top and bottom sections of the ASTM D7173 test shall not differ by more than 10%. The results of ASTM D7173 shall be included on the Certified Test Report. The binder shall meet the requirements of AASHTO M 332 (including Appendix X1) and AASHTO R 29.

d. Warm Mix Additive or Technology:
   i. The warm mix additive or technology must be listed on the NEAUPG Qualified Warm Mix Asphalt (WMA) Technologies List at the time of bid, which may be accessed online at http://www.neaupg.uconn.edu/wma_info.html.
   ii. The warm mix additive shall be blended with the asphalt binder in accordance with the manufacturer's recommendations.
   iii. The blended binder shall meet the requirements of AASHTO M 332 and shall be graded or verified in accordance with AASHTO R 29 for the specified binder grade. The Contractor shall submit a Certified Test Report showing the results of the testing demonstrating the binder grade. In addition, it must include the grade of the virgin binder, the brand name of the warm mix additive, the manufacturer's suggested rate for the WMA additive, the water injection rate (when applicable) and the WMA Technology manufacturer's recommended mixing and compaction temperature ranges.

5. Emulsified Asphalts:

a. General:
   i. Emulsified asphalts shall be homogeneous and be free of contaminants such as fuel oils and other solvents. Emulsions shall be properly stored to prevent damage or separation.
   ii. The blending at mixing plants of emulsified asphalts from different suppliers is strictly prohibited. Contractors who blend emulsified asphalts will be classified as a supplier and will be required to certify the emulsion in accordance with AASHTO PP 71. The emulsified asphalt shall meet the requirements of AASHTO M 140(M) or AASHTO M 208 as applicable.

b. Supplier Approval:
   i. The request for approval of the source of supply shall list the location where the material is manufactured, the handling and storage methods, and certifications in accordance with AASHTO PP 71. Only suppliers that have an approved "Quality Control Plan for Emulsified Asphalt" formatted in accordance with AASHTO PP 71 will be allowed to supply emulsified asphalt to Department projects.
   ii. The supplier shall submit to the Division Chief a Certified Test Report representing each lot in accordance with AASHTO PP 71. The Certified Test Report shall include test results for each specified requirement for the grade delivered and shall also indicate the density at 60ºF. Additionally, once a month one split sample for each emulsified asphalt grade shall be submitted.

.

c. Basis of Approval

i. Each shipment of emulsified asphalt delivered to the project site shall be accompanied with the corresponding SDS and Certified Test Report listing Saybolt viscosity, residue by evaporation, penetration of residue, and weight per gallon at 60°F.

ii. Anionic emulsified asphalts shall conform to the requirements of AASHTO M-140(M). Materials used for tack coat shall not be diluted and meet grade RS-1 or RS-1H. When ambient temperatures are 80˚F and rising, grade SS-1 or SS-lH may be substituted if permitted by the Engineer.

iii. Cationic emulsified asphalt shall conform to the requirements of AASHTO M-208. Materials used for tack coat shall not be diluted and meet grade CRS-1. The settlement and demulsibility test will not be performed unless deemed necessary by the Engineer. When ambient temperatures are 80˚F and rising, grade CSS-1 or CSS-lh may be substituted if permitted by the Engineer.

6. Reclaimed Asphalt Pavement (RAP):

a. Requirements: RAP shall consist of asphalt pavement constructed with asphalt and aggregate reclaimed by cold milling or other removal techniques approved by the Engineer. For bituminous concrete mixtures containing RAP, the Contractor shall submit a JMF in accordance with Article M.04.02 to the Engineer for review.

b. Basis of Approval: The RAP material will be accepted on the basis of one of the following criteria:

i. When the source of all RAP material is from pavements previously constructed on Department projects, the Contractor shall provide a materials certificate listing the detailed locations and lengths of those pavements and that the RAP is only from those locations listed.

ii. When the RAP material source or quality is not known, the Contractor shall test the material and provide the following information along with a request for approval to the Engineer at least 30 calendar days prior to the start of the paving operation. The request shall include a material certificate stating that the RAP consists of aggregates that meet the specification requirements of sub articles M.04.01-1 through 3 and that the binder in the RAP is substantially free of solvents, tars and other contaminants. The Contractor is prohibited from using unapproved material on Department projects and shall take necessary action to prevent contamination of approved RAP stockpiles. Stockpiles of unapproved material shall remain separate from all other RAP materials at all times. The request for approval shall include the following:

1. A 50-pound sample of the RAP to be incorporated into the recycled mixture.
2. A 25-pound sample of the extracted aggregate from the RAP.
3. A statement that RAP material has been crushed to 100% passing the ½ inch sieve and remains free from contaminants such as joint compound, wood, plastic, and metals.

7. Crushed Recycled Container Glass (CRCG):

a. Requirements: The Contractor may propose to use clean and environmentally-acceptable CRCG in an amount not greater than 5% by weight of total aggregate.

b. Basis of Approval: The Contractor shall submit to the Engineer a request to use CRCG. The request shall state that the CRCG contains no more than 1% by weight of contaminants such as paper, plastic and metal and conform to the following gradation:

CRCG Grading Requirements	
Sieve Size	Percent Passing
3/8-inch	100
No. 4	35-100
No. 200	0.0-10.0

8. Joint Seal Material:

a. Requirements: Joint seal material shall be a hot-poured rubber compound intended for use in sealing joints and cracks in bituminous concrete pavements. Joint seal material must meet the requirements of ASTM D 6690 – Type 2.

9. Recycled Asphalt Shingles (RAS)

a. Requirements: RAS shall consist of processed asphalt roofing shingles from post-consumer asphalt shingles or from manufactured shingle waste. The RAS material under consideration for use in bituminous concrete mixtures must be certified as being asbestos free and shall be entirely free of whole, intact nails. The RAS material shall meet the requirements of AASHTO MP 23.

The producer shall test the RAS material to determine the asphalt content and the gradation of the RAS material. The producer shall take necessary action to prevent contamination of RAS stockpiles.

10. Plant Requirements:

a. Mixing Plant and Machinery: The mixing plant used in the preparation of the bituminous concrete shall comply with AASHTO M 156/ASTM D 995 for a Batch Plant or a Drum Dryer Mixer Plant, and be approved by the Engineer.

b. Storage Silos: For all mixes, the Contractor may use silos for short-term storage of Superpave mixtures with prior notification and approval of the Engineer. A silo must have heated cones and an unheated silo cylinder if it does not contain a separate internal heating system. Prior approval must be obtained for storage times greater than those indicated. When multiple silos are filled, the Contractor shall discharge one silo at a time. Simultaneous discharge of multiple silos is not permitted.

Type of silo cylinder	Maximum storage time for all classes (hr)	
	HMA	WMA/PMA
Open Surge	4	Mfg Recommendations
Unheated – Non-insulated	8	Mfg Recommendations
Unheated – Insulated	18	Mfg Recommendations
Heated – No inert gas	TBD by the Engineer	

c. Documentation System: The mixing plant documentation system shall include equipment for accurately proportioning the components of the mixture by weight and in the proper order, controlling the cycle sequence and timing the mixing operations. Recording equipment shall monitor the batching sequence of each component of the mixture and produce a printed record of these operations on each delivery ticket, as specified herein. Material feed controls shall be automatically or manually adjustable to provide proportions within the tolerances listed below for any batch size.

An asterisk (*) shall be automatically printed next to any individual batch weight(s) exceeding the tolerances in ASTM D 995 section 8.7.3. The entire batching and mixing interlock cut-off circuits shall interrupt and stop the automatic batching operations when an error exceeding the acceptable tolerance occurs in proportioning.

There must be provisions so that scales are not manually adjusted during the printing process. In addition, the system shall be interlocked to allow printing only when the scale has come to a complete rest. A unique printed character (m) shall automatically be printed on the truck and batch plant printout when the automatic batching sequence is interrupted or switched to auto-manual or full manual during proportioning. For each day's production, each project shall be provided a clear, legible copy of these recordings on each delivery ticket.

d. Aggregates: The Contractor shall ensure that aggregate stockpiles are managed to provide uniform gradation and particle shape, prevent segregation and cross contamination in a manner acceptable to the Engineer. For drum plants only, the Contractor shall determine the percent moisture content at a minimum, prior to production and half way through production.

e. Mixture: The dry and wet mix times shall be sufficient to provide proper coating (minimum 95% as determined by AASHTO T 195(M)) of all particles with bitumen and produce a uniform mixture.

The Contractor shall make necessary adjustments to ensure all types of bituminous concrete mixtures contain no more than 0.5% moisture throughout when tested in accordance with AASHTO T 329.

f. RAP: The Contractor shall indicate the percent of RAP, the moisture content (as a minimum determined twice daily prior to production and halfway through production), and the net dry weight of RAP added to the mixture on each delivery ticket. For each day of production, the production shall conform to the job mix formula and RAP percentage and no change shall be made without the prior approval of the Engineer.

g. Asphalt Binder: The last day of every month, a binder log shall be submitted when the monthly production for the Department exceeds 5000 tons. Blending of PG binders from different suppliers or grades at the bituminous concrete production facility is strictly prohibited.

h. Warm mix additive: For mechanically foamed WMA, the maximum water injection rate shall not exceed 2.0% water by total weight of binder and the water injection rate shall be constantly monitored during production.

i. Field Laboratory: The Contractor shall furnish the Engineer an acceptable field laboratory at the production facility to test bituminous concrete mixtures during production. The field laboratory shall have a minimum of 300 square feet, have a potable water source and drainage in accordance with the CT Department of Public Health Drinking Water Division, and be equipped with all necessary testing equipment as well as with a PC, printer, and telephone with a dedicated hard-wired phone line. In addition, the PC shall have a high speed internet connection with a minimum upstream of 384 Kbps and a functioning web browser with unrestricted access to https://ctmail.ct.gov. This equipment shall be maintained in clean and good working order at all times and be made available for use by the Engineer.

The laboratory shall be equipped with a suitable heating system capable of maintaining a minimum temperature of 65°F. It shall be clean and free of all materials and equipment not associated with the laboratory. Windows shall be installed to provide sufficient light and ventilation. During summer months adequate cooling or ventilation must be provided so the indoor air temperature shall not exceed the ambient outdoor temperature. Light fixtures and outlets shall be installed at convenient locations, and a telephone shall be within audible range of the testing area. The laboratory shall be equipped with an adequate workbench that has a suitable length, width, and sampling tables, and be approved by the Engineer.

The field laboratory testing apparatus, supplies, and safety equipment shall be capable of performing all tests in their entirety that are referenced in AASHTO R 35, *Standard Practice for Superpave Volumetric Design for Hot-Mix Asphalt (HMA)* and AASHTO M 323, *Standard Specification for Superpave Volumetric Mix Design*. In addition, the quantity of all equipment and supplies necessary to perform the tests must be sufficient to

initiate and complete the number of tests identified in Table M.04.03-2 for the quantity of mixture produced at the facility on a daily basis. The Contractor shall ensure that the Laboratory is adequately supplied at all times during the course of the project with all necessary testing materials and equipment.

The Contractor shall maintain a list of laboratory equipment used in the acceptance testing processes including but not limited to, balances, scales, manometer/vacuum gauge, thermometers, gyratory compactor, clearly showing calibration and/or inspection dates, in accordance with AASHTO R 18. The Contractor shall notify the Engineer if any modifications are made to the equipment within the field laboratory. The Contractor shall take immediate action to replace, repair, and/or recalibrate any piece of equipment that is out of calibration, malfunctioning, or not in operation.

M.04.02—Mix Design and Job Mix Formula (JMF)

1. Curb Mix:

a. Requirements: When curb mix is specified, the Contractor shall develop a bituminous concrete mix design that includes a JMF consisting of target values for gradation, binder content and air voids as shown in Table M.04.02-1. The Contractor may use RAP in 5% increments up to a maximum of 30% provided a new JMF is accepted by the Engineer.

b. Basis of Approval: The Contractor shall submit to the Engineer a request for approval of the JMF annually in accordance with one of the methods described herein. Prior to the start of any paving operations, the JMF must be accepted by the Engineer, and the Contractor must demonstrate the ability to meet the accepted JMF. Additionally, the fraction of material retained between any two consecutive sieves shall not be less than 4%.

The Contractor shall test the mixture for compliance with the submitted JMF and Table M.04.02-1. The maximum theoretical density (Gmm) will be determined by AASHTO T 209. If the mixture does not meet the requirements, the JMF shall be adjusted within the ranges shown in Table M.04.02-1 until an acceptable mixture is produced.

An accepted JMF from the previous operating season may be acceptable to the Engineer provided that there are no changes in the sources of supply for the coarse aggregate, fine aggregate, recycled material (if applicable) and the plant operation had been consistently producing acceptable mixture.

The Contractor shall not change sources of supply after a JMF has been accepted. Before a new source of supply for materials is used, a new JMF shall be submitted to the Engineer for approval.

TABLE M.04.02 – 1:
Master Ranges for Curb Mix Mixtures

Notes: (a) Compaction Parameter 50gyration N_{des}. (b) The percent passing the #200 sieve shall not exceed the percentage of bituminous asphalt binder determined by AASHTO T 164 or AASHTO T 308.		
Mix	Curb Mix	Production Tolerances from JMF target
Grade of PG Binder content %	PG 64S-22 6.5 - 9.0	0.4
Sieve Size		
# 200	3.0 – 8.0 (b)	2.0
# 50	10 - 30	4
# 30	20 - 40	5
# 8	40 - 70	6
# 4	65 - 87	7
¼”		
3/8 “	95 - 100	8
½ “	100	8
¾”		8
1”		
2”		
Additionally, the fraction of material retained between any two consecutive sieves shall not be less than 4%		
Mixture Temperature		
Binder	325°F maximum	
Aggregate	280-350° F	
Mixtures	265-325° F	
Mixture Properties		
VOIDS %	0 – 4.0 (a)	

2. Superpave Design Method – S0.25, S0.375, S0.5, and S1

a. Requirements: The Contractor or its representative shall design and submit Superpave mix designs annually for approval. The design laboratory developing the mixes shall be approved by the Engineer. The mix design shall be based on the specified Equivalent Single-Axle Loads (ESAL). Each bituminous concrete mix type must meet the requirements shown in Tables M.04.02-2 thru Table M.04.02-5 and in accordance with AASHTO M 323 and AASHTO R 35. The mix design shall include the nominal maximum aggregate size and a JMF consisting of target values for gradation and bitumen content for each bituminous concrete mix type designated for the project.

The contractor shall provide test results with supporting documentation from an AASHTO Materials Reference Laboratory (AMRL) with the use of NETTCP Certified Technicians for the following tests:

1. Aggregate consensus properties for each type & level, as specified in Table M.04.02-3 and the specific gravity data.

2. Extracted aggregates from RAP aggregate, when applicable, consensus properties for each type & level, as specified in Table M.04.02-3 and the specific gravity data.

3. New mixes shall be tested in accordance with AASHTO T 283(M) *Standard Method of Test for Resistance of Compacted Hot-Mix Asphalt (HMA) to Moisture-Induced Damage*, (TSR). The compacted specimens may be fabricated at a bituminous concrete facility and then tested at an AMRL accredited facility.

   The AASHTO T 283(M) test results, specimens, and corresponding JMF sheet (Form MAT-429s) shall be submitted by the Contractor for review.

In addition, minimum binder content values apply to all types of bituminous concrete mixtures, as stated in Table M.04.02-5. For mixtures containing RAP, the virgin production and the anticipated proportion of binder contributed by the RAP cannot be less than the total permitted binder content value for that type nor the JMF minimum binder content.

i. <u>Superpave Mixture (virgin)</u>: For bituminous concrete mixtures that contain no recycled material, the limits prescribed in Tables M.04.02-2 thru Table M.04.02-5 apply. The Contractor shall submit a JMF, on a form provided by the Engineer, with the individual fractions of the aggregate expressed as percentages of the total weight of the mix and the source(s) of all materials to the Engineer for approval. The JMF shall indicate the corrected target binder content and applicable binder correction factor (ignition oven or extractor) for each mix type by total weight of mix. The mineral filler (dust) shall be defined as that portion of blended mix that passes the #200 sieve by weight when tested in accordance with AASHTO T 30. The dust-to-effective asphalt (D/Pbe) ratio shall be between 0.6 and 1.2 by weight. The dry/wet mix times and hot bin proportions (batch plants only) for each type shall be included in the JMF.

The percentage of aggregate passing each sieve shall be plotted on a 0.45 power gradation chart and shall be submitted for all bituminous concrete mixtures. This chart shall delineate the percentage of material passing each test sieve size as defined by the JMF. The percentage of aggregate passing each standard sieve shall fall within the specified control points as shown in Tables M.04.02-2 thru Table M.04.02-5. A change in the JMF requires that a new chart be submitted.

ii. Superpave Mixtures with RAP: Use of approved RAP may be allowed with the following conditions:

- RAP amounts up to 15% may be used with no binder grade modification.
- RAP amounts up to 20% may be used provided a new JMF is approved by the Engineer. The JMF submittal shall include the grade of virgin binder added. The JMF shall be accompanied by a blending chart and supporting test results in accordance with AASHTO M 323 Appendix X1, or by test results that show the combined binder (recovered binder from the RAP, virgin binder at the mix design proportions, warm mix asphalt additive and any other modifier if used) meets the requirements of the specified binder grade.
- Two representative samples of RAP shall be obtained. Each sample shall be split and one split sample shall be tested for binder content in accordance with AASHTO T 164 and the other in accordance AASHTO T 308.

Unless approved by the Engineer, RAP material shall not be used with any other recycling option.

iii. Superpave Mixtures with RAS: Use of RAS may be allowed solely in HMA S1 mixtures with the following conditions:

- RAS amounts up to 3% may be used.
- RAS total binder replacement up to 15% may be used with no binder grade modification.
- RAS total binder replacement up to 20% may be used provided a new JMF is approved by the Engineer. The JMF submittal shall include the grade of virgin binder added. The JMF shall be accompanied by a blending chart and supporting test results in accordance to AASHTO M 323 appendix X1 or by test results that show the combined binder (recovered binder from the RAP, virgin binder at the mix design proportions, warm mix asphalt additive and any other modifier if used) meets the requirements of the specified binder grade.
- Superpave Mixtures with RAS shall meet AASHTO PP 78 design considerations. The RAS asphalt binder availability factor (F) used in AASHTO PP 78 Equation 2 shall be 0.85.

iv. Superpave Mixtures with CRCG: In addition to the requirements in M.04.02 – 2 a through c, for bituminous concrete mixtures that contain CRCG, the Contractor shall submit a materials certificate to the Engineer stating that the CRCG complies with requirements stated in Article M.04.01, as applicable. Additionally, 1% hydrated lime, or other accepted non-stripping agent, shall be added to all mixtures containing CRCG. CRCG material shall not be used with any other recycling option.

b. Basis of Approval: On an annual basis, the Contractor shall submit to the Engineer any bituminous concrete mix design, and JMF anticipated for use on Department projects. Prior to the start of any paving operations, the mix design and JMF must be approved by the Engineer. Bituminous concrete mixture supplied to the project without an approved mix design and JMF will be rejected. The following information must be included in the mix design submittal:

i. Gradation, consensus properties and specific gravities of the aggregate, RAP, and RAS.
ii. Average asphalt content of the RAP and RAS by AASHTO T 164.
iii. Source of RAP and RAS and percentage to be used.
iv. Warm mix Technology and manufacturer's recommended additive rate and tolerances.
v. TSR test report, and, if applicable, anti-strip manufacturer and recommended dosage rate.
vi. Mixing and compaction temperature ranges for the mix with and without the warm-mix technology incorporated.
vii. JMF ignition oven correction factor by AASHTO T 308.

The JMF shall be accepted if the Plant mixture and materials meet all criteria as specified in Tables M.04.02-2 thru Table M.04.02-5. If the mixture does not meet the requirements, the contractor shall adjust the JMF within the ranges shown in Tables M.04.02-2 thru Table M.04.02-5 until an acceptable mixture is produced. All equipment, tests, and computations shall conform to the latest AASHTO R 35 and AASHTO M 323.

Any JMF, once approved, shall only be acceptable for use when it is produced by the designated plant, it utilizes the same component aggregates and binder source, and it continues to meet all criteria as specified herein, and component aggregates are maintained within the tolerances shown in Table M.04.02-2.

The Contractor shall not change any component source of supply including consensus properties after a JMF has been accepted. Before a new source of materials is used, a revised JMF shall be submitted to the Engineer for approval. Any approved JMF applies only to the plant for which it was submitted. Only one mix with one JMF will be approved for production at any one time. Switching between approved JMF mixes with different component percentages or sources of supply is prohibited.

c. Mix Status: Each facility will have each type of bituminous concrete mixture evaluated based on the previous year of production, for the next construction paving season, as determined by the Engineer. Based on the rating a type of mixture receives it will determine whether the mixture can be produced without the completion of a PPT. Ratings will be provided to each bituminous concrete producer annually prior to the beginning of the paving season.

The rating criteria are based on compliance with Air Voids and Voids in Mineral Aggregate (VMA) as indicated in Table M.04.03-3: *Superpave Master Range for Bituminous Concrete Mixture Production*, and are as follows:

Criteria A: Based on Air Voids. Percentage of acceptance results with passing air voids.

Criteria B: Based on Air Voids and VMA. The percentage of acceptance results with passing VMA, and the percentage of acceptance results with passing air voids, will be averaged.

The final rating assigned will be the lower of the rating obtained with Criteria A or Criteria B.

Ratings are defined as:

"A" – Approved:
A rating of "A" is assigned to each mixture type from a production facility with a current rating of 70% passing or greater.

"PPT" – Pre-Production Trial:
Rating assigned to each mixture type from a production facility when:

1. there are no passing acceptance production results submitted to the Department from the previous year;
2. there is a source change in one or more aggregate components from the JMF on record by more than 10% by weight;
3. there is a change in RAP percentage;
4. the mixture has a rating of less than 70% from the previous season;
5. a new JMF not previously submitted.

Bituminous concrete mixtures rated with a "PPT" cannot be shipped or used on Department projects. A passing "PPT" test shall be performed with NETTCP certified personnel on that type of mixture by the bituminous concrete producer and meet all specifications (Table M.04.02-2 Table M.04.02-5) before production shipment may be resumed.
Contractors that have mix types rated as "PPT" may use one of the following methods to change the rating to an "A."

Option A: Schedule a day when a Department inspector can be at the facility to witness a passing "PPT" test or,

Option B: When the Contractor or their representative performs a "PPT" test without being witnessed by an inspector, the Contractor shall submit the test results and a split sample including 2 gyratory molds, 5,000 grams of boxed bituminous concrete for binder and gradation determination, and 5,000 grams of cooled loose bituminous concrete for Gmm determination for verification testing and approval. Passing verifications will designate the bituminous concrete type to

be on an "A" status. Failing verifications will require the contractor to submit additional trials.

Option C: When the Contractor or their representative performs a "PPT" test without being witnessed by a Department inspector, the Engineer may verify the mix in the Contractor's laboratory. Passing verifications will designate the bituminous concrete type to be an "A" status. Failing verifications will require the Contractor to submit additional trials.

When Option (A) is used and the "PPT" test meets all specifications, the "PPT" test is considered a passing test and the rating for that mix is changed to "A". When the "PPT" test is not witnessed, the "PPT" Option (B) or (C) procedure must be followed. If the "PPT" Option (B) procedure is followed, the mixtures along with the test results must be delivered to the Materials Testing Lab. The test results must meet the "C" tolerances established by the Engineer. The tolerance Table is included in the Department's current QA Program for Materials, Acceptance and Assurance Testing Policies and Procedures.

"U" – No Acceptable Mix Design on File:

Rating assigned to a type of mixture that does not have a JMF submitted, or the JMF submitted has not been approved, or is incomplete. A mix design or JMF must be submitted annually seven (7) days prior in order to obtain an "A," or "PPT" status for that mix. A "U" will be used only to designate the mix status until the mix design has been approved, and is accompanied with all supporting data as specified. Bituminous concrete mixtures rated with a "U" cannot be used on Department projects.

TABLE M.04.02– 2: Superpave Master Range for Bituminous Concrete Mixture Design Criteria

Notes: (1) Minimum Pb as specified in Table M.04.02-5. (2) Voids in Mineral Aggregates shall be computed as specified in AASHTO R 35. (3) Control point range is also defined as the master range for that mix. (4) Dust is considered to be the percent of materials passing the #200 sieve. (5) For WMA, lower minimum aggregate temperature will require Engineer's approval. (6) For WMA and PMA, the mix temperature shall meet manufacturer's recommendations.

	S0.25		S0.375		S0.5		S1	
Sieve	CONTROL POINTS (3)		CONTROL POINTS(3)		CONTROL POINTS(3)		CONTROL POINTS(3)	
inches	Min (%)	Max (%)	Min (%)	Max (%)	Min (%)	Max (%)	Min (%)	Max (%)
2.0	-	-	-	-	-	-	-	-
1.5	-	-	-	-	-	-	100	-
1.0	-	-	-	-	-	-	90	100
3/4	-	-	-	-	100	-	-	90
1/2	100	-	100	-	90	100	-	-
3/8	97	100	90	100	-	90	-	-
#4	-	90	-	90	-	-	-	-
#8	32	67	32	67	28	58	19	45
#16	-	-	-	-	-	-	-	-
#30	-	-	-	-	-	-	-	-
#50	-	-	-	-	-	-	-	-
#100	-	-	-	-	-	-	-	-
#200	2.0	10.0	2.0	10.0	2.0	10.0	1.0	7.0
Pb (1)	-	-	-	-	-	-	-	-
VMA (2) (%)	16.0 ± 1		16.0 ± 1		15.0 ± 1		13.0 ± 1	
VA (%)	4.0 ± 1		4.0 ± 1		4.0 ± 1		4.0 ± 1	
Gse	JMF value		JMF value		JMF value		JMF value	
Gmm	JMF ± 0.030		JMF ± 0.030		JMF ± 0.030		JMF ± 0.030	
Dust/Pbe(4)	0.6 – 1.2		0.6 – 1.2		0.6 – 1.2		0.6 – 1.2	
Agg. Temp(5)	280 – 350°F		280 – 350°F		280 – 350°F		280 – 350°F	
Mix Temp(6)	265 – 325°F		265 – 325°F		265 – 325°F		265 – 325°F	
Design TSR	≥ 80%		≥ 80%		≥ 80%		≥ 80%	
T-283 Stripping	Minimal, as determined by the Engineer							

TABLE M.04.02–3: Superpave Master Range for Consensus Properties of Combined Aggregate Structures

Notes: (1) If less than 25 % of a given layer is within 4 inches of the anticipated top surface, the layer may be considered to be below 4 inches for mixture design purposes.

Traffic Level	Design ESALs (80 kN)	Coarse Aggregate Angularity (1) ASTM D 5821	Fine Aggregate Angularity (7) AASHTO T 304	Flat and Elongated Particles ASTM D 4791	Sand Equivalent AASHTO T 176
-----	(million)			>#4	-----
1*	< 0.3	55/- -	40	10	40
2	0.3 to < 3.0	75/- -	40	10	40
3	≥ 3.0	95/90	45	10	45
	Design ESALs are the anticipated project traffic level expected on the design lane, projected over a 20 year period, regardless of the actual expected design life of the roadway.	Criteria presented as minimum values. 95/90 denotes that a minimum of 95% of the coarse aggregate, by mass, shall have one fractured face and that a minimum of 90% shall have two fractured faces.	Criteria presented as minimum percent air voids in loosely compacted fine aggregate passing the #8 sieve.	Criteria presented as maximum Percent by mass of flat and elongated particles of materials retained on the #4 sieve, determined at 5:1 ratio.	Criteria presented as minimum values for fine aggregate passing the #8 sieve.

*** NOTE: Level 1 for use by Towns and Municipalities ONLY.**

TABLE M.04.02– 4: Superpave Master Range for Traffic Levels and Design Volumetric Properties

Traffic Level	Design ESALs	Number of Gyrations by Superpave Gyratory Compactor			Percent Density of Gmm from HMA/WMA specimen			Voids Filled with Asphalt (VFA) Based on Nominal mix size – inch			
	(million)	Nini	Ndes	Nmax	Nini	Ndes	Nmax	0.25	0.375	0.5	1
1*	< 0.3	6	50	75	≤ 91.5	96.0	≤ 98.0	70 - 80	70 - 80	70 - 80	67 - 80
2	0.3 to < 3.0	7	75	115	≤ 90.5	96.0	≤ 98.0	65 - 78	65 - 78	65 - 78	65 - 78
3	≥ 3.0	8	100	160	≤ 90.0	96.0	≤ 98.0	73 – 76	73 - 76	65 - 75	65 - 75

*** NOTE: Level 1 for use by Towns and Municipalities ONLY.**

TABLE M.04.02– 5:
Superpave Minimum Binder Content by Mix Type and Level

Mix Type	Level	Binder Content Minimum (1)
S0.25	1*	5.6
S0.25	2	5.5
S0.25	3	5.4
S0.375	1*	5.6
S0.375	2	5.5
S0.375	3	5.4
S0.5	1*	5.0
S0.5	2	4.9
S0.5	3	4.8
S1	1*	4.6
S1	2	4.5
S1	3	4.4

*** NOTE: Level 1 for use by Towns and Municipalities ONLY.**

M.04.03— Production Requirements:

1. Standard Quality Control Plan (QCP) for Production:

The QCP for production shall describe the organization and procedures which the Contractor shall use to administer quality control. The QCP shall include the procedures used to control the production process, to determine when immediate changes to the processes are needed, and to implement the required changes. The QCP must detail the inspection, sampling and testing protocols to be used, and the frequency for each.

Control Chart(s) shall be developed and maintained for critical aspect(s) of the production process as determined by the Contractor. The control chart(s) shall identify the material property, applicable upper and lower control limits, and be updated with current test data. As a minimum, the following quality characteristics shall be included in the control charts: percent passing #4 sieve, percent passing #200 sieve, binder content, air voids, Gmm and VMA. The control chart(s) shall be used as part of the quality control system to document variability of the bituminous concrete production process. The control chart(s) shall be submitted to the Engineer the first day of each month.

The QCP shall also include the name and qualifications of a Quality Control Manager. The Quality Control Manager shall be responsible for the administration of the QCP, including compliance with the plan and any plan modifications.

The Contractor shall submit complete production testing records to the Engineer within 24 hours in a manner acceptable to the Engineer.

The QCP shall also include the name and qualifications of any outside testing laboratory performing any QC functions on behalf of the Contractor. The QCP must also include a list of sampling & testing methods and frequencies used during production, and the names of all Quality Control personnel and their duties.

Approval of the QCP does not imply any warranty by the Engineer that adherence to the plan will result in production of bituminous concrete that complies with these specifications. The Contractor shall submit any changes to the QCP as work progresses.

2. Acceptance Sampling & Testing Methods:

i. General:

Acceptance samples of mixtures shall be obtained from the hauling vehicles and tested by the Contractor at the facility during each day's production.

The Contractor shall submit all acceptance tests results to the Engineer within 24 hours or prior to the next day's production. All acceptance test specimens and supporting documentation must be retained by the Contractor. Verification testing will be performed by the Engineer in accordance with the Department's QA Program for Materials. Labeled Acceptance test specimens shall be retained at the production facilities and may be disposed of with the approval of the Engineer. All Quality Control specimens shall be clearly labeled and separated from the Acceptance specimens.

Should the Department be unable to verify the Contractor's acceptance test result(s) due to a failure of the Contractor to retain acceptance test specimens or supporting documentation, the Contractor shall review its quality control plan, determine the cause of the nonconformance and respond in writing within 24 hours to the Engineer describing the corrective action taken at the plant. In addition, the Contractor must provide supporting documentation or test results to validate the subject acceptance test result(s). The Engineer may invalidate any positive adjustments for material corresponding to the acceptance test(s). Failure of the Contractor to adequately address quality control issues at a facility may result in suspension of production for Department projects at that facility.

Contractor personnel performing acceptance sampling and testing must be present at the facility prior to, during, and until completion of production, and be certified as a NETTCP HMA Plant Technician or Interim HMA Plant Technician and be in good standing. Production of material for use on State projects must be suspended by the Contractor if such personnel are not present.

Technicians found by the Engineer to be non-compliant with NETTCP or Department policies may be removed by the Engineer from participating in the acceptance testing process for Department projects until their actions can be reviewed.

Anytime during production that testing equipment becomes inoperable, production can continue for a maximum of 1 hour. The Contractor shall obtain box sample(s) in accordance with Table M.04.03-1 to satisfy the daily acceptance testing requirement for the quantity shipped to the project. The box sample(s) shall be tested once the equipment issue has been resolved to the satisfaction of the Engineer. Production beyond 1 hour may be considered by the Engineer. Production will not be permitted beyond that day until the subject equipment issue has been resolved.

ii. Curb Mix Acceptance Sampling and Testing Procedures:

Curb Mixes shall be tested by the Contractor at a frequency of one test per every 250 tons of cumulative production, regardless of the day of production.

When these mix designs are specified, the following acceptance procedures and AASHTO test methods shall be used:

TABLE M.04.03 – 2: Curb Mix Acceptance Test Procedures

Protocol	Reference	Description
1	**AASHTO T 30(M)**	Mechanical Analysis of Extracted Aggregate
2	**AASHTO T 168**	Sampling of Bituminous Concrete
3	**AASHTO T 308**	Binder content by Ignition Oven method (adjusted for aggregate correction factor)
4	**AASHTO T 209(M)**	Theoretical Maximum Specific Gravity and Density of Bituminous Paving Mixtures
5	**AASHTO T 312**	Superpave Gyratory molds compacted to N_{des}
6	**AASHTO T 329**	Moisture Content of Hot-Mix Asphalt (HMA) by Oven Method

a. Determination of Off-Test Status:

i. The test results of AASHTO T 308 and T 30(M) will be used to determine if the mixture is within the tolerances shown in Table M.04.02-1. Curb Mixtures are considered “off test" when the test results indicate that any single value for bitumen content or gradation are not within the tolerances shown in Table M.04.02-1 for that mixture. If the mix is “off test”, the Contractor must take immediate actions to correct the deficiency and a new acceptance sample shall be tested on the same day or the following day of production.

ii. When multiple plants and silos are located at one site, mixture supplied to one project is considered as coming from one source for the purpose of applying the “off test” status.

iii. The Engineer may cease supply from the plant when test results from three consecutive samples are not within the JMF tolerances or the test results from two consecutive samples not within the master range indicated in Table M.04.02-1 regardless of production date.

b. JMF Changes

i. If a test indicates that the bitumen content or gradation are outside the tolerances, the Contractor may make a single JMF change as allowed by the Engineer prior to any additional testing. A JMF change shall include the date and name of the Engineer that allowed it. Consecutive test results outside the requirements of Table M.04.02-1 JMF tolerances may result in rejection of the mixture.

ii. Any modification to the JMF shall not exceed 50% of the JMF tolerances indicated in Table M.04.02-1 for any given component of the mixture without approval of the Engineer. When such an adjustment is made to the bitumen, the corresponding production percentage of bitumen shall be revised accordingly.

iii. Superpave Mix Acceptance Sampling and Testing Procedures:

The hauling vehicle from which samples are obtained shall be selected using stratified – random sampling based on the total estimated tons of production in accordance with ASTM D 3665, except that the first test shall be randomly taken from the first 151 tons or as directed by the Engineer. The Engineer may request a second acceptance test within the first sub lot. One acceptance test shall always be performed in the last sub-lot based on actual tons of material produced.

The number of sub lots/acceptance tests is based on the total production per day as indicated in Table M.04.03-1. Quantities of the same type/level mix per plant may be combined daily for multiple state projects to determine the number of sub lots. The Engineer may direct that additional acceptance samples be obtained to represent materials actually being delivered to the project.

The payment adjustment for air voids and liquid binder will be calculated per sub lot as described in Section 4.06.

An acceptance test shall not be performed within 150 tons of production from a previous acceptance test unless approved by the Engineer. Quality Control tests are not subject to this restriction. Unless otherwise tested, a minimum of one (1) acceptance test shall be performed for every four days of production at a facility for each type/level mix (days of production may or may not be consecutive days).

TABLE M.04.03 – 1:
Superpave Acceptance Testing Frequency per Type/Level/Plant

Daily quantity produced in tons (lot)	Number of Sub Lots/Tests
0 to 150	0, Unless requested by the Engineer
151 to 600	1
601 to 1,200	2
1,201 to 1,800	3
1,801 or greater	1 per 600 tons or portions thereof

When the Superpave mix design is specified, the following acceptance and AASHTO test procedures shall be used:

TABLE M.04.03– 3: Superpave Acceptance Testing Procedures

Protocol	Reference	Description
1	AASHTO T 168	Sampling of bituminous concrete
2	AASHTO R 47	Reducing samples to testing size
3	AASHTO T 308	Binder content by Ignition Oven method (adjusted for aggregate correction factor)
4	AASHTO T 30	Gradation of extracted aggregate for bituminous concrete mixture
5	AASHTO T 312	(1)Superpave Gyratory molds compacted to N_{des}
6	AASHTO T 166	(2)Bulk specific gravity of bituminous concrete
7	AASHTO R 35	(2)Air voids, VMA
8	AASHTO T 209(M)	Maximum specific gravity of bituminous concrete (average of two tests)
9	AASHTO T 329	Moisture content of Production bituminous concrete

Notes: **(1)** One set equals two six-inch molds. Molds to be compacted to Nmax for PPTs and to Ndes for production testing. The first sublot of the year will be compacted to N_{max}
(2) Average value of one set of six-inch molds.

If the average corrected Pb content differs by 0.3% or more from the average bituminous concrete facility production delivery ticket in five (5) consecutive tests regardless of the production date (moving average), the Contractor shall immediately investigate, determine an assignable cause and correct the issue. When two consecutive moving average differences are 0.3% or more, the Engineer may require a new aggregate correction factor.

The test specimen must be ready to be placed in an approved ignition furnace for testing in accordance with AASHTO T 308 within thirty minutes of being obtained from the hauling vehicle and the test shall start immediately after.

The Contractor shall perform moisture susceptibility (TSR) testing annually for all design levels of HMA-, WMA-, and PMA- S0.5 plant-produced mixtures, in accordance with the latest version of AASHTO T 283(M).

If any material source changes from the previous year, or during the production season, a mix design TSR as well as a production TSR is required for the new mixture. The AASHTO T 283(M) test shall be performed at an AASHTO Materials Reference Laboratory (AMRL) by NETTCP Certified Technicians. The test results and specimens shall be submitted to the Engineer for review. This shall be completed within 30 days from the start of production. Superpave mixtures that require anti-strip additives (either liquid or mineral) shall continue to meet all requirements specified herein for binder and bituminous concrete. The Contractor shall submit the name, manufacturer, percent used, technical datasheet and SDS for the anti-strip additive (if applicable) to the Engineer. In addition, compaction of samples shall be accomplished utilizing an accepted Superpave Gyratory Compactor (SGC), supplied by the Contractor. The SGC shall be located at the facility supplying mixture to the project.

a. Determination of Off-Test Status:

i. Superpave mixes shall be considered *"off test"* when any Control Point Sieve, VA, VMA, and Gmm values are outside of the limits specified in Table M.04.03-4 and the computed binder content (Pb) established by AASHTO T308 or as documented on the vehicle delivery ticket is below the minimum binder content stated in sub article M.04.02-5. Note that further testing of samples or portions of samples not initially tested for this purpose cannot be used to change the status.

ii. Any time the bituminous concrete mixture is considered Off-test:

1. The Contractor shall notify the Engineer (and project staff) when the plant is *"off test"* for a type of mixture. When multiple plants and silos are located at one site, mixture supplied to one project is considered as coming from one source for the purpose of applying the *"off test"* determination.

2. The Contractor must take immediate actions to correct the deficiency, minimize *"off test"* production to the project, and obtain an additional Process Control (PC) test after any corrective action to verify production is in conformance to the specifications. A PC test will not be used for acceptance and is solely for the use of the Contractor in its quality control process.

b. Cessation of Supply for Superpave Mixtures with no Payment Adjustment: Production of bituminous concrete shall cease for the Project from any plant that consistently fails to produce mixture that meets the JMF and volumetric properties. The quantity of Superpave mixtures shipped to the project that is "off-test" will not be adjusted for deficient mixtures.

A Contractor shall cease to supply mixture from a plant when:

1. Bituminous concrete mixture is "off test" on three (3) consecutive tests for any combination of VMA or Gmm, regardless of date of production.

2. Bituminous concrete mixture is "off test" on two (2) consecutive tests for the Control Point sieves in one day's production.

Following cessation, the Contractor shall immediately make necessary material or process corrections and run a Pre-Production Trial (PPT) for that type of mixture. Use of that type of mixture from that plant will be prohibited on the Project until the Contractor has demonstrated the ability to produce acceptable mixture from that facility. When the Contractor has a passing test and has received approval from the Engineer, the use of that mixture to the Project may resume.

c. Cessation of Supply for Superpave Mixtures with Payment Adjustment: Production of bituminous concrete shall cease for the Project from any plant that consistently fails to produce mixture that meets the Superpave minimum binder content by mix type and level listed in Table M.04.02-5. The quantity of Superpave mixtures shipped to the project that is "off-test" will be adjusted for deficient mixtures in accordance with Section 4.06.

A Contractor shall cease to supply mixture from a plant when:

1. The binder content (Pb) is below the requirements of Table M.04.02-5 on the ignition oven test result after two (2) consecutive tests, regardless of the date of production.

2. The air voids (VA) is outside the requirements of Table M.04.03-4 after three (3) consecutive tests, regardless of the date of production.

Following cessation, the Contractor shall immediately make necessary material or process corrections and run a Pre-Production Trial (PPT) for that type of mixture. Use of that type of mixture from that plant will be prohibited on the Project until the Contractor has demonstrated the ability to produce acceptable mixture from that facility. When the Contractor has a passing test and has received approval from the Engineer, the use of that mixture to the Project may resume.

d. JMF Changes for Superpave Mixture Production: It is understood that a JMF change is effective from the time it was submitted forward and is not retroactive to the previous test or tests. JMF changes are permitted to allow for trends in aggregate and mix properties but every effort shall be employed by the Contractor to minimize this to ensure a uniform

and dense pavement. A revised JMF submittal shall include the date and name of the Engineer that allowed it.

JMF changes are only permitted prior to or after a production shift for all bituminous-concrete types of mixtures and only when they:

i. Are requested in writing and pre-approved by the Engineer.
ii. Are based on a minimum of a two test trend.
iii. Are documented with a promptly submitted revised JMF on the form provided by the Engineer.
iv. A revised JMF submittal shall include the date and name of the Engineer that allowed it.

No change will be made on any aggregate or RAP consensus property or specific gravity unless the test is performed at an AASHTO Materials Reference Laboratory (AMRL) by NETTCP Certified Technicians.

A JMF change shall be submitted every time the plant target RAP and/or bin percentage deviates by more than 5% and/or the plant target binder content deviates by more than 0.15% from the active JMF.

TABLE M.04.03– 4: Superpave Master Range for Bituminous Concrete Mixture Production

Notes: (1) 300°F minimum after October 15. (2) Minimum Pb as specified in Table M.04.02-5 (3) Control point range is also defined as the master range for that mix. (4) JMF tolerances shall be defined as the limits for production compliance. VA & Pb payment is subject to adjustments, as defined in sub-article 4.06.04 - 2. (5) For WMA, lower minimum aggregate temperature will require Engineer's approval. (6) For WMA and/or polymer modified asphalt, the mix temperature shall meet manufacturer's recommendations. In addition, for WMA, the maximum mix temperature shall not exceed 325°F once the WMA technology is incorporated.

	S0.25		S0.375		S0.5		S1		Tolerances
Sieve	CONTROL POINTS (4)		CONTROL POINTS (4)		CONTROL POINTS (4)		CONTROL POINTS (4)		From JMF Targets (4)
inches	Min(%)	Max(%)	Min(%)	Max(%)	Min(%)	Max(%)	Min(%)	Max(%)	±Tol
1.5	-	-	-	-	-	-	100	-	
1.0	-	-	-	-	-	-	90	100	
3/4	-	-	-	-	100	-	-	90	
1/2	100	-	100	-	90	100	-	-	
3/8	97	100	90	100	-	90	-	-	
#4	-	90	-	90	-	-	-	-	
#8	32	67	32	67	28	58	19	45	
#16	-	-	-	-	-	-	-	-	
#200	2.0	10.0	2.0	10.0	2.0	10.0	1.0	7.0	
Pb(2)	-	-	-	-	-	-	-	-	note (2)
VMA (%)	16.0		16.0		15.0		13.0		1.0
VA (%)	4.0		4.0		4.0		4.0		1.0
Gmm	JMF value		JMF value		JMF value		JMF value		0.030
Agg. Temp (5)	280 – 350F		280 – 350F		280 – 350F		280 – 350F		
Mix Temp (6)	265 – 325 F (1)		265 – 325 F (1)		265 – 325 F (1)		265 – 325 F (1)		
Prod. TSR	N/A		N/A		≥80%		N/A		
T-283 Stripping	N/A		N/A		Minimal as determined by the Engineer		N/A		

TABLE M.04.03– 5:
JMF Tolerances for Application of Positive Adjustments

Notes: (1) Only for S1 mixes.
(2) Only for S0.5 and S1 mixes.

Sieve	Tolerances From JMF Targets
inches	±Tol
3/4	9 (1)
1/2	9 (1)
3/8	9 (2)
#4	8
#8	7
#16	6
#200	3
Pb	0.4

TABLE M.04.03– 6:
Superpave Master Range for Traffic Levels and Design Volumetric Properties

Traffic Level	Design ESALs (million)	Number of Gyrations by Superpave Gyratory Compactor	
		Nini	Ndes
1*	< 0.3	6	50
2	0.3 to < 3.0	7	75
3	≥3.0	8	100

* NOTE: Level 1 for use by Towns and Municipalities ONLY.

TABLE M.04.03-7:
Modifications to Standard AASHTO and ASTM Test Specifications and Procedures

AASHTO Standard Specification	
Reference	**Modification**
M 140	Emulsified Asphalt grade RS-1H shall meet all the requirements of the emulsified asphalt grade RS-1 except for the penetration requirement of the residue that will change from 100 to 200 penetration units (0.1 mm) to 40 to 90 penetration units (0.1 mm).
AASHTO Standard Method of Test	
Reference	**Modification**
T 30	Section 7.2 thru 7.4 Samples are not routinely washed for production testing
T 168	Samples are taken at one point in the pile. Samples from a hauling vehicle are taken from only one point instead of three as specified. Selection of Samples: Sampling is equally important as the testing, and the sampler shall use every precaution to obtain samples that are truly representative of the bituminous mixture. Box Samples: In order to enhance the rate of processing samples taken in the field by construction or maintenance personnel the samples will be tested in the order received and data processed to be determine conformance to material specifications and to prioritize inspections by laboratory personnel.
T 195	Section 4.3 only one truck load of mixture is sampled. Samples are taken from opposite sides of the load.
T 209	Section 7.2 The average of two bowls is used proportionally in order to satisfy minimum mass requirements. 8.3 Omit Pycnometer method.
T 283	When foaming technology is used, the material used for the fabrication of the specimens shall be cooled to room temperature, and then reheated to the manufactures recommended compaction temperature prior to fabrication of the specimens.
T 331	6.1 Cores are dried to a constant mass prior to testing using a core-dry machine.

AASHTO Standard Recommended Practices	
Reference	**Modification**
R 26	Quality Control Plans must be formatted in accordance with AASHTO R 26, certifying suppliers of performance-graded asphalt binders, Section 9.0, Suppliers Quality Control Plan, and "NEAUPG Model PGAB QC Plan." 1. The Department requires that all laboratory technician(s) responsible for testing PG-binders be certified or Interim Qualified by the New England Transportation Technician Certification Program (NETTCP) as a PG Asphalt Binder Lab Technician. 2. Sampling of asphalt binders should be done under the supervision of qualified technician. NECTP "Manual of Practice," Chapter 2 Page 2-4 (Key Issues 1-8). 3. A copy of the Manual of Practice for testing asphalt binders in accordance with the Superpave PG Grading system shall be in the testing laboratory. 4. All laboratories testing binders for the Department are required to be accredited by the AASHTO Materials Reference Laboratory (AMRL). 5. Sources interested in being approved to supply PG-binders to the Department by use of an "in-line blending system," must record properties of blended material, and additives used. 6. Each source of supply of PG-binder must indicate that the binders contain no additives used to modify or enhance their performance properties. Binders that are manufactured using additives, modifiers, extenders etc., shall disclose the type of additive, percentage and any handling specifications/limitations required. 7. All AASHTO M 320 references shall be replaced with AASHTO M 332. 8. Each year, in April and September, the supplier shall submit test results for two BBR testing at two different temperatures in accordance with AASHTO R 29. Suppliers shall provide AASHTO M 332 testing results and split samples at a minimum of once per lot.

ON-THE-JOB TRAINING (OJT) WORKFORCE DEVELOPMENT PILOT

Description

To provide construction industry related job opportunities to minorities, women and economically disadvantaged individuals; and to increase the likelihood of a diverse and inclusive workforce on Connecticut Department of Transportation (ConnDOT) projects.

All contractors (existing and newcomers) will be automatically placed in the Workforce Development Pilot. Standard OJT requirements typically associated with individual projects will no longer be applied at the project level for new projects. Instead, these requirements will be applicable on an annual basis for each contractor performing work on ConnDOT projects.

The OJT Workforce Development Pilot will allow a contractor to train employees on Federal, State and privately funded projects located in Connecticut. However, contractors should give priority to training employees on ConnDOT Federal-Aid funded projects.

Funding

The Department will establish an OJT fund annually from which contractors may bill the Department directly for eligible trainee hours. The funds for payment of trainee hours on federal-aid projects will be allocated from the ½ of 1% provided for OJT funding, and will be based on hours trained, not to exceed a maximum of $25,000.00 per year; per contractor.

Minorities and Women

Developing, training and upgrading of minorities, women and economically disadvantaged individuals toward journeyperson level status is the primary objective of this special training provision. Accordingly, the Contractor shall make every effort to enroll minority, women and economically disadvantaged individuals as trainees to the extent that such persons are available within a reasonable area of recruitment. This training commitment is not intended, and shall not be used, to discriminate against any applicant for training whether a member of a minority group or not.

Assigning Training Goals

The Department, through the OJT Program Coordinator, will assign training goals for a calendar year based on the contractor's past two year's activities and the contractor's anticipated upcoming year's activity with the Department. At the beginning of each year, all contractors eligible will be contacted by the Department to determine the number of trainees that will be assigned for the upcoming calendar year. At that time, the Contractor shall enter into an agreement with the Department to provide a self-imposed on-the-job training program for the calendar year. This agreement will include a specific number of annual training goals agreed to by both parties. The number of training assignments may range from one (1) to six (6) per

contractor per calendar year. Each January, a summary of the trainees required and the OJT Workforce Development Pilot package will be sent to participating contractors. The number of trainees assigned to each contractor in the summary will increase proportionately not to exceed 6, as shown in the following table. This package will also be provided to contractors as they become newly eligible for the OJT Workforce Development Pilot throughout the remainder of the year. Projects awarded after September 30 will be included in the following year's Program.

The dollar thresholds for training assignments are as follows:

$4.5 – 8 million=	1 trainee
$ 9 – 15 million=	2 trainees
$16 – 23 million=	3 trainees
$24 – 30 million=	4 trainees
$31 – 40 million=	5 trainees
$41 – and above=	6 trainees

Training Classifications

Preference shall be given to providing training in the following skilled work classifications. However, the classifications established are not all-inclusive:

Equipment Operators	Electricians
Laborers	Painters
Carpenters	Iron / Reinforcing Steel Workers
Concrete Finishers	Mechanics
Pipe Layers	Welders

The Department has on file common training classifications and their respective training requirements; that may be used by the contractors. Contractors shall submit new classifications for specific job functions that their employees are performing. The Department will review and recommend for acceptance the new classifications proposed by contractors, if applicable. New classifications shall meet the following requirements:

Proposed training classifications are reasonable and realistic based on the job skill classification needs, and the number of training hours specified in the training classification is consistent with common practices and provides enough time for the trainee to obtain journeyman level status.

Where feasible, 25% percent of apprentices or trainees in each occupation shall be in their first year of apprenticeship or training. The number of trainees shall be distributed among the work classifications on the basis of the contractor's needs and the availability of journeymen in the various classifications within a reasonable area of recruitment.

No employee shall be employed as a trainee in any classification in which they have successfully completed a training course leading to journeyman level status or in which they have been employed as a journeyman.

Records and Reports

The Contractor shall maintain enrollment in the program and submit all required reports documenting company compliance under these contract requirements. These documents and any other information shall be submitted to the OJT Program Coordinator as requested.

Upon the trainee's completion and graduation from the program, the Contractor shall provide each trainee with a certification Certificate showing the type and length of training satisfactorily completed.

Trainee Interviews

In order to determine the continued effectiveness of the OJT Program in Connecticut, the department will periodically conduct personal interviews with current trainees and may survey recent graduates of the program. This enables the OJT Program Coordinator to modify and improve the program as necessary. Trainee interviews are generally conducted at the job site to ensure that the trainees' work and training is consistent with the approved training program.

Trainee Wages

Contractors shall compensate trainees on a graduating pay scale based upon a percentage of the prevailing minimum journeyman wages (Davis-Bacon Act). Minimum pay shall be as follows:

60 percent	of the journeyman wage for the first half of the training period
75 percent	of the journeyman wage for the third quarter of the training period
90 percent	of the journeyman wage for the last quarter of the training period

In no case, will the trainee be paid less than the prevailing rate for general laborer as shown in the contract wage decision (must be approved by the Department of Labor).

Achieving or Failing to Meet Training Goals

The Contractor will be credited for each trainee currently enrolled or who becomes enrolled in the approved training program and providing they receive the required training under the specific training program. Trainees will be allowed to be transferred between projects if required by the Contractor's schedule and workload. The OJT Program Coordinator must be notified of transfers within five (5) days of the transfer or reassignments by e-mail (Phylisha.Coles@ct.gov).

Where a contractor does not or cannot achieve its annual training goal with female or minority trainees, they must produce adequate Good Faith Efforts documentation. Good Faith Efforts are those designed to achieve equal opportunity through positive, aggressive, and continuous result-oriented measures. 23 CFR § 230.409(g) (4). Contractors should request minorities and females from unions when minorities and females are under-represented in the contractor's workforce.

Whenever a contractor requests ConnDOT approval of someone other than a minority or female, the contractor must submit documented evidence of its Good Faith Efforts to fill that position with a minority or female. When a non-minority male is accepted, a contractor must continue to attempt to meet its remaining annual training goals with females and minorities.

Where a contractor has neither attained its goal nor submitted adequate Good Faith Efforts documentation, ConnDOT will issue a letter of non-compliance. Within thirty (30) days of receiving the letter of non-compliance, the contractor must submit a written Corrective Action Plan (CAP) outlining the steps that it will take to remedy the non-compliance. The CAP must be approved by ConnDOT. Failure to comply with the CAP may result in your firm being found non-responsive for future projects.

Measurement and Payment

Optional reimbursement will be made to the contractor for providing the required training under this special provision on ConnDOT Federal-Aid funded projects only.

Contractor will be reimbursed at $0.80 for each hour of training given to an employee in accordance with an approved training or apprenticeship program. This reimbursement will be made even though the Contractor receives additional training program funds from other sources, provided such other source does not specifically prohibit the contractor from receiving other reimbursement.

Reimbursement for training is made annually or upon the trainees completion and not on a monthly basis. No payment shall be made to the Contractor if either the failure to provide the required training, or the failure to hire the trainee as a journeyperson, is caused by the Contractor.

Program reimbursements will be made directly to the prime contractor on an annual basis. To request reimbursement, prime contractors must complete the Voucher for OJT Workforce Development Pilot Hourly Reimbursement for each trainee in the OJT Program. This form is included in the OJT Workforce Development Pilot package and is available on the Department's web site at:

www.ct.gov/dot

The completed form must be submitted to the Office of Contract Compliance for approval. The form is due on the 15th day of January for each trainee currently enrolled and for hours worked on ConnDOT Federal-Aid funded projects only.

SMALL CONTRACTOR AND SMALL CONTRACTOR MINORITY BUSINESS ENTERPRISES (SET-ASIDE)

March, 2001

NOTE: Certain of the requirements and procedures stated in this "Special Provision" are applicable prior to the execution of the Contract.

I. GENERAL

A. The Contractor shall cooperate with the Connecticut Department of Transportation (CONNDOT) in implementing the required contract obligations concerning "Small Contractor" and "Small Contractor Minority Business Enterprise" use on this Contract in accordance with Section 4a-60g of the Connecticut General Statutes as revised. References, throughout this "Special Provision", to "Small Contractors" are also implied references to "Small Contractor Minority Business Enterprises" as both relate to Section IIA of these provisions. The Contractor shall also cooperate with CONNDOT in reviewing the Contractor's activities relating to this provision. This "Special Provision" is in addition to all other equal opportunity employment requirements of this Contract.

B. For the purpose of this "Special Provision", the "Small Contractor(s)" and "Minority Business Enterprise(s)" named to satisfy the set-aside requirement must be certified by the Department of Administrative Services, Business Connections/ Set-Aside Unit [(860) 713-5236 www.das.state.ct.us/busopp.htm] as a "Small Contractor" and "Minority Business Enterprises" as defined by Section 4a-60g Subsections (1) and (3) of the Connecticut General Statutes as revised and is subject to approval by CONNDOT to do the work for which it is nominated pursuant to the criteria stipulated in Section IIC-3.

C. Contractors who allow work which they have designated for "Small Contractor" participation in the pre-award submission required under Section IIC to be performed by other than the approved "Small Contractor" organization and prior to concurrence by CONNDOT, will not be paid for the value of the work performed by organizations other than the "Small Contractor" designated.

D. If the Contractor is unable to achieve the specified contract goals for "Small Contractor" participation, the Contractor shall submit written documentation to CONNDOT's Manager of Construction Operations indicating his/her good faith efforts to satisfy goal requirements. Documentation is to include but not be limited to the following:

1. A detailed statement of the efforts made to select additional subcontract opportunities for work to be performed by each "Small Contractor" in order to increase the likelihood of achieving the stated goal.

2. A detailed statement, including documentation of the efforts made to contact and solicit contracts with each "Small Contractor", including the names, addresses, dates and telephone numbers of each "Small Contractor" contacted, and a description of the information provided to each "Small Contractor" regarding the scope of services and anticipated time schedule of items proposed to be subcontracted and the nature of response from firms contacted.

3. For each "Small Contractor" that placed a subcontract quotation which the Contractor considered not to be acceptable, provide a detailed statement of the reasons for this conclusion.

4. Documents to support contacts made with CONNDOT requesting assistance in satisfying the contract specified or adjusted "Small Contractor" dollar requirements.

5. Document other special efforts undertaken by the Contractor to meet the defined goal.

E. Failure of the Contractor to have at least the specified dollar amount of this contract performed by "Small Contractor" as required in Section IIA of this "Special Provision" will result in the reduction in contract payment to the Contractor by an amount equivalent to that determined by subtracting from the specific dollar amount required in Section IIA, the dollar payments for the work actually performed by each "Small Contractor". The deficiency in "Small Contractor" achievement, will therefore, be deducted from the final contract payment. However, in instances where the Contractor can adequately document or substantiate its good faith efforts made to meet the specified or adjusted dollar amount to the satisfaction of CONNDOT, no reduction in payments will be imposed.

F. All records must be retained for a period of three (3) years following completion of the contract and shall be available at reasonable times and places for inspection by authorized representatives of CONNDOT.

G. Nothing contained herein, is intended to relieve any contractor or subcontractor or material supplier or manufacturer from compliance with all applicable Federal and State legislation or provisions concerning equal employment opportunity, affirmative action, nondiscrimination and related subjects during the term of this Contract.

II. **SPECIFIC REQUIREMENTS**

In order to increase the participation of "Small Contractors", CONNDOT requires the following:

A. Not less than **20** (%) percent of the **final** value of this Contract shall be subcontracted to and performed by, and/or supplied by, manufactured by and paid to "Small Contractors" and/or "Small Contractors Minority Business Enterprises".

If the above percentage is zero (0%) AND an asterisk (*) has been entered in the adjacent brackets [ ], this Contract is 100% solely set-aside for participation by "Small Contractors" and/or "Small Contractors Minority Business Enterprises".

B. The Contractor shall assure that each "Small Contractor" will have an equitable opportunity to compete under this "Special Provision", particularly by arranging solicitations, time for the preparation of Quotes, Scope of Work, and Delivery Schedules so as to facilitate the participation of each "Small Contractor".

C. The Contractor shall provide to CONNDOT's Manager of Contracts within Seven (7) days after the bid opening the following items:

1. An affidavit (Exhibit I) completed by each named "Small Contractor" subcontractor listing a description of the work and indicating the dollar amount of all contract(s) and/or subcontract(s) that have been awarded to him/her for the current State Fiscal Year (July 1 - June 30) does not exceed the Fiscal Year limit of $10,000,000.00.

2. A certification of work to be subcontracted (Exhibit II) signed by both the Contractor and the "Small Contractor" listing the work items and the dollar value of the items that the nominated "Small Contractor" is to perform on the project to achieve the minimum percentage indicated in Section IIA above.

3. A certification of past experience (Exhibit III) indicating the scope of work the nominated "Small Contractor" has performed on all projects, public and private, for the past two (2) years.

4. In instances where a change from the originally approved named "Small Contractor" (see Section IB) is proposed, the Contractor is required to submit, in a reasonable and expeditious manner, a revised submission, comprised of the documentation required in Section IIC, Paragraphs 1, 2 and 3 and Section E together with documentation to substantiate and

justify the change, (i.e., documentation to provide a basis for the change) to CONNDOT's Manager of Construction Operations for its review and approval prior to the implementation of the change. The Contractor must demonstrate that the originally named "Small Contractor" is unable to perform in conformity to specifications, or unwilling to perform, or is in default of its contract, or is overextended on other jobs. The Contractor's ability to negotiate a more advantageous contract with another "Small Contractor" is not a valid basis for change. Documentation shall include a letter of release from the originally named "Small Contractor" indicating the reason(s) for the release.

D. After the Contractor signs the Contract, the Contractor will be required to meet with CONNDOT's Manager of Construction Operations or his/her designee to review the following:

1. What is expected with respect to the "Small Contractor" set aside requirements.

2. Failure to comply with and meet the requirement can and will result in monetary deductions from payment.

3. Each quarter after the start of the "Small Contractor" the Contractor shall submit a report to CONNDOT's Manager of Construction Operations indicating the work done by, and the dollars paid to each "Small Contractor" to date.

4. What is required when a request to sublet to a "Small Contractor" is submitted.

E. The Contractor shall submit to CONNDOT's Manager of Construction Operations all requests for subcontractor approvals on standard forms provided by the Department.

If the request for approval is for a "Small Contractor" subcontractor for the purpose of meeting the contract required "Small Contractor" percentage stipulated in Section IIA, a copy of the legal contract between the Contractor and the "Small Contractor" subcontractor must also be submitted at the same time. Any subsequent amendments or modifications of the contract between the Contractor and the "Small Contractor" subcontractor must also be submitted to CONNDOT's Manager of Construction Operations with an explanation of the change(s). The contract must show items of work to be performed, unit prices and, if a partial item, the work involved by both parties.

In addition, the following documents are to be attached:

(1) A statement explaining any method or arrangement for renting equipment. If rental is from a Contractor, a copy of Rental Agreement must be submitted.

(2) A statement addressing any special arrangements for manpower.

(3) A statement addressing who will purchase material.

F. Contractors subcontracting with a "Small Contractor" to perform work or services as required by this "Special Provision" shall not terminate such firms without advising CONNDOT, in writing, and providing adequate documentation to substantiate the reasons for termination if the designated "Small Contractor" firm has not started or completed the work or the services for which it has been contracted to perform.

G. Material Suppliers or Manufacturers

If the Contractor elects to utilize a "Small Contractor" supplier or manufacturer to satisfy a portion or all of the specified dollar requirements, the Contractor must provide the Department with:

1. An executed Affidavit Small Contractor (Set-Aside) Connecticut Department of Transportation Affidavit Supplier or Manufacturer (sample attached), and

2. Substantiation of payments made to the supplier or manufacturer for materials used on the project.

Brokers and packagers shall not be regarded as material Suppliers or manufacturer.

H. Non-Manufacturing or Non-Supplier "Small Contractor" Credit

Contractors may count towards its "Small Contractor" goals the following expenditures with "Small Contractor" firms that are not manufacturers or suppliers:

1. Reasonable fees or commissions charged for providing a bona fide service such as professional, technical, consultant or managerial services and assistance in the procurement of essential personnel, facilities, equipment, material or supplies necessary for the performance of the contract provided that the fee or commission is determined by the Department of Transportation to be reasonable and consistent with fees customarily allowed for similar services.

2. The fees charged for delivery of materials and supplies required on a job site (but not the cost of the materials and supplies themselves) when the hauler, trucker, or delivery service is not also the manufacturer of or a regular dealer in the materials and supplies, provided that the fee is determined by the Department of Transportation to be reasonable and not excessive as compared with fees customarily allowed for similar services.

3. The fees or commissions charged for providing any bonds or insurance specifically required for the performance of the Contract, provided that the fee or commission is determined by the Department of Transportation to be reasonable and not excessive as compared with fees customarily allowed for similar services.

III. **BROKERING**

For the purpose of this "Special Provision", a "Broker" is one who acts as an agent for others in negotiating contracts, purchases, sales, etc., in return for a fee or commission. Brokering of work by a "Small Contractor" is not allowed and is a contract violation.

IV. **PRE-AWARD WAIVERS:**

If the Contractor's submission of the "Small Contractor" listing, as required by Section IIC indicates that it is unable, by subcontracting to obtain commitments which at least equal the amount required by Section IIA, it may request, in writing, a waiver of up to 50% of the amount required by Section IIA. To obtain such a waiver, the Contractor must submit a completed "Application for Waiver of Small Contractor Minority Business Enterprise Goals" to CONNDOT's Manager of Contracts which must also contain the following documentation:

1. Information described in Section ID.

2. For each "Small Contractor" contacted but unavailable, a statement from each "Small Contractor" confirming its unavailability.

Upon receipt of the submission requesting a waiver, the CONNDOT's Manager of Contracts shall submit the documentation to the Director of the Office of Contract Compliance who shall review it for completeness. After completion of the Director of Contract Compliance's review, she/he should write a narrative of his/her findings of the application for a waiver, which is to include his/her recommendation. The Director of Contract Compliance shall submit the written narrative to the Chairperson of the DBE Screening Committee at least five (5) working days before the scheduled meeting. The Contractor shall be invited to attend the meeting and present his/her position. The DBE Screening Committee shall render a decision on the waiver request within five (5) working days after the meeting. The DBE Screening Committee's decision shall be final. Waiver applications are available from the CONNDOT Manager of Contracts.

EXHIBIT I Mar. 01

SMALL CONTRACTOR/*MINORITY BUSINESS ENTERPRISE
(* Delete if not Applicable)
SET-ASIDE PROGRAM
(QUALIFICATION AFFIDAVIT)

PROJECT(s) _____
(INCLUDING TOWN & DESCRIPTION)

STATE OF _____CONNECTICUT_____

COUNTY OF_____

I_____,ACTING IN BEHALF
NAME OF PARTY SIGNING AFFIDAVIT
OF_____,DO HEREBY CERTIFY
PERSON FIRM OR ORGANIZATION
AND AFFIRM THAT THE INFORMATION SET FORTH BELOW IS TRUE AND ACCURATE TO THE BEST OF MY KNOWLEDGE. AS OF THIS DATE_____THE LIST OF SMALL CONTRACTOR SET-ASIDE PROGRAM - CONTRACTS AND/OR SUBCONTRACTS AWARDED DURING THE CURRENT FISCAL YEAR (JULY 1 - JUNE 30) 20_____ IS AS FOLLOWS:

Col. 1 TOWN AND PROJECT NUMBER	Col. 2 STATE AGENCY WHICH AWARDED CONTRACT	Col. 3 CONTRACT AMOUNT AWARDED UNDER THIS PROGRAM	Col. 4 AMOUNT OF WORK SUBCONTRACTED FROM OTHER FIRMS UNDER THIS PROGRAM	Col. 5 TOTAL AMOUNT OF ALL WORK UNDER THIS PROGRAM Col. 3 Plus Col. 4
	TOTALS	$	$	$

_____
NAME OF PERSON, FIRM OR ORGANIZATION

(FIRM SEAL)

_____
SIGNATURE & TITLE OF OFFICIAL

SWORN TO AND SUBSCRIBED BEFORE ME BY_____

WHO IS PERSONALLY KNOWN TO ME, THIS_____DAY OF_____, 20_____

_____
(NOTARY PUBLIC)

MY COMMISSION EXPIRES_____SEAL

PLEASE NOTE THAT ALL THE WORK AWARDED OR SUBCONTRACTED TO YOUR FIRM UNDER THE SET-ASIDE PROGRAM IN A FISCAL YEAR (JULY 1-JUNE 30) INCLUDING THIS PROJECT, CANNOT BE MORE THAN $10,000,000.00

Mar.01

EXHIBIT II

DEPARTMENT OF TRANSPORTATION
CONTRACT DIVISION
2800 BERLIN TURNPIKE
NEWINGTON, CT 06111

CERTIFICATION OF WORK TO BE SUBCONTRACTED
NOMINATED SMALL CONTRACTOR/*MINORITY BUSINESS ENTERPRISE

* Delete if not applicable

PLEASE INCLUDE A COPY OF CERTIFICATION LETTER

CONTRACTOR_____

ADDRESS_____

TOWN_____PROJECT NO._____

DESCRIPTION OF PROJECT_____

_____

CONTRACT BID AMOUNT $_____

DATE_____

Listed below is the Nominated Small Contractor/Minority Business Enterprise for the above project and the requested data:

Name, Address & Tel No. of the Nominated Firm	ITEM(s)NUMBER(s) and Description of the Item(s) to be performed by and paid to the Subcontractor	Quantities (indicate if partial)	Prime's Bid Amount For Item	Dollar Amount Subcontracted	Small Business Set-Aside Dollar Requirement

Signed By _____
Small Contractor/*Minority Business Enterprise
(Subcontractor)

Signed By_____
Contractor

Title_____

EXHIBIT III

Mar.01

CERTIFICATION
PAST CONSTRUCTION EXPERIENCE

SMALL CONTRACTOR / * MINORITY BUSINESS ENTERPRISES

* Delete if not applicable

PLEASE LIST ALL CONSTRUCTION PROJECTS YOUR ORGANIZATION HAS WORKED ON IN THE PAST TWO FISCAL YEARS

PROJECT LOCATION NUMBER AND DESCRIPTION APPLICABLE	CONTRACT AMOUNT	IF WORK PERFORMED AS PRIME GIVE OWNERS NAME IF WORK PERFORMED AS SUBCONTRACTOR GIVE CONTRACTORS NAME	START DATE	ACTUAL OR ESTIMATED COMPLETION DATE	NAME AND PHONE OF OWNER OR PRIME CONTRACTOR AS

SIGNED BY: _____

SMALL BUSINESS CONTRACTOR
*MINORITY BUSINESS ENTERPRISES

D.O.T. PROJECT NO. _____

* Delete if not applicable

MARCH, 2001

SMALL CONTRACTOR/SMALL CONTRACTOR MINORITY BUSINESS ENTERPRISE (MBE) (SET-ASIDE) CONNECTICUT DEPARTMENT OF TRANSPORTATION AFFIDAVIT – SUPPLIER OR MANUFACTURER

This affidavit must be completed by the State Contractor's designated Small Contractor/ Small Contractor Minority Business Enterprise (MBE), notarized and attached to the contractor's request to utilize a Small Contractor/Small Contractor Minority Business Enterprise (MBE) supplier or manufacturer as a credit towards its Small Contractor/Small Contractor Minority Business Enterprise (MBE) contract requirement; failure to do so will result in not receiving credit towards the contract Small Contractor/Small Contractor Minority Business Enterprise (MBE) requirement.

State Project No. _____
Federal Aid Project No. _____
Description of Project _____

I, _____, acting in behalf of _____
(Name of person signing Affidavit) (Small Contractor/Small Contractor MBE contractor person,
_____ of which I am the_____ affirm that _____
firm, association or certify and corporation) (Title of Person) (Small
_____is a certified Small Contractor/Small
Contractor/Small Contractor MBE person, firm, association or corporation)
Contractor Minority Business Enterprise, as defined by Section 4a-60g of the Connecticut General Statutes, as revised.

I further certify and affirm that _____
(Small Contractor/Small Contractor MBE person, firm, association or corporation)
will assume the actual and contractual responsibility for the provision of the materials and/or supplies sought by _____. If a manufacturer, I produce goods from raw
(State Contractor)
materials or substantially alter them before resale, or if a supplier, I perform a commercially useful function in the supply process.

I understand that false statements made herein are punishable at Law (Sec. 53a-157, CGS, as revised).

_____
(Name of Small Contractor/Small Contractor MBE person, firm, association or corporation)

_____
(Signature and Title of Official making the Affidavit)

Subscribed and sworn to before me, the _____ day of _____ 200____.

_____
Notary Public (Commissioner of the Superior Court)

My Commission Expires _____

CERTIFICATE OF CORPORATION

I, _____, certify that I am the _____ (Official) of the Corporation named in the foregoing instrument; that I have been duly authorized to affix the seal of the Corporation to such papers as require the seal; that _____, who signed said instrument on behalf of the Corporation, was then _____ of said corporation; that said instrument was duly signed for and in behalf of said Corporation by authority of its governing body and is within the scope of its corporation powers.

_____

(Signature of Person Certifying) (Date)

(Corporate Seal)

ITEM #0020903A - LEAD COMPLIANCE FOR MISCELLANEOUS EXTERIOR TASKS

Description:

Work under this item shall include the special handling measures and work practices required for miscellaneous exterior tasks that impact materials containing or covered by lead paint. Lead paint includes paint found to contain **any** detectable amount of lead by Atomic Absorption Spectrophotometry (AAS) or X-Ray Fluorescence (XRF). Examples of typical miscellaneous exterior tasks includes; work impacting signs, guiderails, minor bridge rehabilitation, catenary structures, canopy structures, spot/localized paint removal, etc.

All activities shall be performed in accordance with the OSHA Lead in Construction Regulations (29 CFR 1926.62), the USEPA RCRA Hazardous Waste Regulations (40 CFR Parts 260 through 274), and the CTDEEP Hazardous Waste Regulations (RCSA 22a-209-1 and 22a-449(c)).

All activities shall be performed by individuals with appropriate levels of OSHA lead awareness and hazard communication training and shall supervised by the Contractors Competent Person on the job site at all times. The Contractors Competent Person is one who is capable of identifying existing and predictable hazards in the surroundings or working conditions which are unsanitary, hazardous or dangerous to employees, and who has authorization to take prompt corrective measures to eliminate them.

Deviations from these Specifications require the written approval of the Engineer.

Materials:

All materials shall be delivered to the job site in the original packages, containers, or bundles bearing the name of the manufacturer, the brand name and product technical description, with MSDS sheets as applicable.

No damaged or deteriorating materials shall be used. If material becomes contaminated with lead, the material shall be decontaminated or disposed of as lead-containing waste material. The cost to decontaminate and dispose of this material shall be at the expense of the Contractor.

The following material requirements are to be met if to be used during the work:

Fire retardant polyethylene sheet shall be in roll size to minimize the frequency of joints, with factory label indicating minimum six (6) mil thickness.

Polyethylene disposable bags shall be minimum six (6) mils thick.

Tape (or equivalent) product capable of sealing joints in adjacent polyethylene sheets and for the attachment of polyethylene sheets to finished or unfinished surfaces must be capable of adhering under both dry and wet conditions.

Cleaning Agents and detergent shall be lead specific, such as TriSodium Phosphate (TSP).

Chemical strippers and chemical neutralizers shall be compatible with the substrate as well as with each other. Such chemical stripper shall contain less than 50% Volatile Organic Compounds (VOCs) by weight in accordance with RCSA 22a-174-40 Table 40-1.

Labels and warning signs shall conform to 29 CFR 1926.62, 40 CFR 260 through 274 and 49 CFR 172 as appropriate.

Air filtration devices and vacuum units shall be equipped with High-Efficiency Particulate Air (HEPA) filters.

Construction Methods:

(1) Pre-Abatement Submittals and Notices

A. Prior to the start of **any** work on a contiguous per site basis that will generate hazardous lead waste above conditionally exempt small quantities (greater than 100 kg/month or greater than 1000 kg at any time), the Contractor shall obtain from the Engineer on a contiguous per site basis a temporary EPA Hazardous Waste Generators ID number, unless otherwise directed by the Engineer.

B. Fifteen (15) working days prior to beginning work that impacts lead paint, the Contractor shall submit the following to the Engineer:

1. Work plan for work impacting lead paint including engineering controls, methods of containment of debris and work practices to be employed, as needed, to minimize employee exposure and prevent the spread of lead contamination outside the Regulated Area.

2. Copies of all employee certificates, dated within the previous twelve (12) months, relating to OSHA lead awareness and hazard communication training and training in the use of lead-safe work practices. SSPC training programs may be accepted as meeting these requirements if it can be demonstrated that such training addressed all required topics.

   This information shall be updated and resubmitted annually, or as information changes, for the duration of the activities impacting lead to verify continued compliance.

3. Name and qualifications of Contractor's OSHA Competent Person under 29 CFR 1926.62.

4. Documentation from the Contractor, typed on company letterhead and signed by the Contractor, certifying that all employees listed therein have received the following:

   a. medical monitoring within the previous twelve (12) months, as required in 29 CFR 1926.62;
   b. biological monitoring within the previous six (6) months, as required in 29 CFR 1926.62;
   c. respirator fit testing within the previous twelve (12) months, as required in 29 CFR 1910.134 (for those who don a tight-fitting face piece respirator)

   This information shall be updated and resubmitted annually, or as information changes, for the duration of the activities impacting lead to verify continued compliance.

5. Names of the proposed non-hazardous construction and demolition (C&D) lead debris bulky waste disposal facility (CTDEEP-permitted Solid Waste landfill).

6. Names of the proposed scrap metal recycling facilities. The Contractor shall submit to the Engineer all documentation necessary to demonstrate the selected facility is able to accept lead-painted scrap metal.

7. Names of the proposed hazardous waste disposal facility (selected from the Department approved list provided herein), and copies of each facilities acceptance criteria and sampling frequency requirements.

8. Copies of the proposed hazardous waste transporters current USDOT Certificate of Registration for Hazardous Materials Transport, and the proposed transporters current Hazardous Waste Transporter Permits for the State of Connecticut and the waste destination State.

9. Negative exposure assessments conducted within the previous 12 months documenting that employee exposure to lead for each task is below the OSHA Action Level of 30 $\mu g/m^3$. If a negative exposure assessment has not been conducted, the Contractor shall submit its air monitoring program for the work tasks as part of the Work Plan. Until a negative exposure assessment is developed for each task impacting lead paint, the Contractor shall ensure that all workers and authorized persons entering the Regulated Area wear protective clothing and respirators in accordance with OSHA 29 CFR 1926.62.

No activity shall commence until all required submittals have been received and found acceptable to the Engineer. Those employees added to the Contractor's original list will be

allowed to perform work only upon submittal of acceptable documentation to, and review by, the Engineer.

Contractor shall provide the Engineer with a minimum of 48 hours notice in advance of scheduling, changing or canceling work activities.

(2) Lead Abatement Provisions

A. General Requirements:

All employees of the Contractor who perform work impacting lead paint shall be properly trained to perform such duties. In addition, the Contractor shall instruct all workers in all aspects of personnel protection, work procedures, emergency evacuation procedures and use of equipment including procedures unique to this project.

Contractor shall provide all labor, materials, tools, equipment, services, testing, and incidentals which are necessary or required to perform the work in accordance with applicable governmental regulations, industry standards and codes, and these Specifications.

Prior to beginning work, the Engineer and Contractor shall perform a visual survey of each work area and review conditions.

As necessary, the Contractor shall:

> Shut down and lock out electrical power, including all receptacles and light fixtures, where feasible. The use or isolation of electrical power will be coordinated with all other ongoing uses of electrical power at the site.

If adequate electrical supply is not available at the site, the Contractor shall supply temporary power. Such temporary power shall be sufficient to provide adequate lighting and power the Contractor's equipment. The Contractor is responsible for proper connection and installation of electrical wiring and shall ensure safe installation of electrical equipment in compliance with applicable electrical codes and OSHA requirements.

If water is not available at the site for the Contractor's use, the Contractor shall supply sufficient water for each shift to operate the wash facility/decontamination shower units in addition to the water needed at the work area.

The Engineer may provide a Project Monitor to monitor compliance of the Contractor and protect the interests of the Department. In such cases, no activity impacting lead paint shall be performed until the Project Monitor is on-site. Where no Project Monitor will be provided, Contractor shall proceed at the direction of the Engineer. Environmental sampling, including ambient air sampling, TCLP waste stream sampling, and dust wipe sampling, will be conducted by the State as it deems necessary throughout the project. Air monitoring to comply with the Contractor's obligations under OSHA remains solely responsibility of the Contractor.

If at any time, procedures for engineering, work practice, administrative controls or other topics are anticipated to deviate from those documented in the submitted and accepted Lead Work Plan, the Contractor shall submit a modification of its existing plan for review and acceptance by the Engineer prior to implementing the change.

If air samples collected outside of the Regulated Area during activities impacting lead paint indicate airborne lead concentrations greater than original background levels or 30 ug/m^3, whichever is larger, or if at any time visible emissions of lead paint extend out from the Regulated Area, an examination of the Regulated Area shall be conducted and the cause of such emissions corrected. Cleanup of surfaces outside the Regulated Area using HEPA vacuum equipment or wet cleaning techniques shall be done prior to resuming work.

Work outside the initial designated area(s) will not be paid for by the Engineer. The Contractor will be responsible for all costs incurred from these activities including repair of any damage.

B. Regulated Area

The Contractor shall establish a Regulated Area through the use of appropriate barrier tape or other means to control unauthorized access into the area where activities impacting lead paint are occurring. Warning signs meeting the requirements of 29 CFR 1926.62 shall be posted at all approaches to Regulated Areas. These signs shall read:

WARNING
LEAD WORK AREA
POISON
NO SMOKING OR EATING

The Contractor shall implement appropriate engineering controls such as poly drop cloths, local exhaust ventilation, wet dust suppression methods, etc. as necessary, and as approved by the Engineer, to prevent the spread of lead contamination beyond the Regulated Area in accordance with the Contractor's approved work plan. Should the previously submitted work plan prove to be insufficient to contain the contamination, the Contractor shall modify its plan and submit it for review by the Engineer.

C. Wash Facilities:

The Contractor shall provide handwash facilities in compliance with 29 CFR 1926.51(f) and 29 CFR 1926.62 <u>regardless of airborne lead exposure</u>.

If employee exposure to airborne lead exceeds the OSHA Permissible Exposure Limit of 50 micrograms per cubic meter (µg/m^3), shower rooms must be provided. The Shower Room shall be of sufficient capacity to accommodate the number of workers. One shower stall shall be provided for each eight (8) workers. Showers shall be equipped with hot and cold or warm

running water. Shower water shall be collected and filtered using best available technology and disposed of in accordance with all Federal, State and local laws, regulations and ordinances.

D. Personal Protection:

The Contractor shall initially determine if any employee performing construction tasks impacting lead paint may be exposed to lead at or above the OSHA Action Level of 30 $\mu g/m^3$. Assessments shall be based on initial air monitoring results as well as other relevant information. The Contractor may rely on historical air monitoring data obtained within the past 12 months under workplace conditions closely resembling the process, type of material, control methods, work practices and environmental conditions used and prevailing in the Contractors current operations to satisfy the exposure assessment requirements. Monitoring shall continue as specified in the OSHA standard until a negative exposure assessment is developed.

Until a negative exposure assessment is developed for each task impacting lead paint, the Contractor shall ensure that all workers and authorized person entering the Regulated Area wear protective clothing and respirators in accordance with OSHA 29 CFR 1926.62. Protective clothing shall include impervious coveralls with elastic wrists and ankles, head covering, gloves and foot coverings. Sufficient quantities shall be provided to last throughout the duration of the project.

Protective clothing provided by the Contractor and used during chemical removal operations shall be impervious to caustic materials. Gloves provided by the Contractor and used during chemical removal shall be of neoprene composition with glove extenders.

Respiratory protective equipment shall be provided and selection shall conform to 42 CFR Part 84, 29 CFR Part 1910.134, and 29 CFR Part 1926.62. A formal respiratory protection program must be implemented in accordance with 29 CFR Part 1926.62 and Part 1910.134.

E. Air Monitoring Requirements

The Contractor shall:

1. Provide air monitoring equipment including sample filter cassettes of the type and quantity required to properly monitor operations and personnel exposure surveillance throughout the duration of the project.

2. Conduct initial exposure monitoring to determine if any employee performing construction tasks impacting lead paint may be exposed to lead at or above the OSHA Action Level of 30 micrograms per cubic meter. Monitoring shall continue as specified in the OSHA standard until a negative exposure assessment is developed.

3. Conduct personnel exposure assessment air sampling, as necessary, to assure that workers are using appropriate respiratory protection in accordance with OSHA Standard 1926.62. Documentation of air sampling results must be recorded at the

work site within twenty-four (24) hours and shall be available for review until the job is complete.

F. Lead Abatement Procedures

The Contractor's Competent Person shall be at the job site at all times during work impacting lead.

Work impacting lead paint shall not begin until authorized by the Engineer, following a pre-work visual inspection by the Project Monitor or Engineer to verify existing conditions.

Any activity impacting lead painted surfaces shall be performed in a manner which minimizes the spread of lead dust contamination and generation of airborne lead.

The Contractor shall conduct exposure assessments for all tasks which impact lead paint in accordance with 29 CFR 1926.62(d) and shall implement appropriate personal protective equipment until negative exposure assessments are developed.

All work impacting the materials identified below shall be conducted within an established Regulated Area with a remote wash facility/decontamination system in accordance with "C. Wash Facilities" and the OSHA Lead in Construction Standard. In accordance with 29 CFR 1926.62, engineering controls and work practices shall be utilized to prevent the spread of lead dust and debris beyond the Regulated Area and limit the generation of airborne lead. All wastes containing lead paint shall be properly contained and secured for storage, transportation and disposal.

The Contractor shall ensure proper entry and exit procedures for workers and authorized persons who enter and leave the Regulated Area. All workers and authorized persons shall leave the Regulated Area and proceed directly to the wash or shower facilities where they will HEPA vacuum gross debris from work suit, remove and dispose of work suit, wash and dry face and hands, and vacuum clothes. Lead chips and dust must not be removed by blowing or shaking of clothing. Wash water shall be collected, filtered, and disposed of in accordance with Federal, State and local water discharge standards. Any permit required for such discharge shall be the responsibility of the Contractor.

No one shall eat, drink, smoke, chew gum or tobacco, or apply cosmetics while in the Regulated Area.

Data from the limited lead testing performed by the Engineer is documented in the reports listed in the "Notice to Contractor – Hazardous Materials Investigations" or is presented herein. Under no circumstances shall this information be the sole means used by the Contractor for determining the extent of lead painted materials. The Contractor shall be responsible for verification of all field conditions affecting performance of the work as described in these Specifications in accordance with OSHA, USEPA, USDOT and CTDEEP standards. Compliance with the applicable requirements is solely the responsibility of the Contractor.

The following details the extent of each phase of operation designated for this project. Phase areas may be combined or divided at the direction of the Engineer. Proceed through the sequencing of the work phases under the direction of the Engineer.

Bridge No. 02102 and Bridge No. 04179, Route 99 over Hog Brook, Rocky Hill

- **No painted metal or concrete bridge surfaces were identified on Bridge No. 02102 and therefore no lead based paint (LBP) is present.**

- **Lead paint was identified on the painted metal surfaces of the pedestrian bridge, Bridge No. 04179. XRF readings showed the paint to be lead based.**

Girders, Bearings, Cross Beams, Beam Ends, Guard Rails, etc.	**Metal**	**Grey**	**0.1-2.7 mg/cm^2**

- **TCLP waste stream sampling/analysis of the paint associated with the steel/metal bridge components of Bridge No. 04179 characterized the paint waste as RCRA Hazardous waste.**

Paint debris	**65 mg/l**

While conducting work to replace the bridges, where it is necessary to impact the painted metal surfaces, the Contractor shall either:

a. **Remove the paint to be impacted prior to impacting the metal in accordance with OSHA Lead in Construction Standard 29CFR 1926.62, or**
b. **Impact the metal using mechanical means with the paint in place in accordance with OSHA Lead in Construction Standard 29CFR 1926.62.**

The Contractor shall submit a Work Plan to ConnDOT outlining the exact procedures that will be used to perform the work, contain the spread of lead debris and protect the employees performing the required renovation work impacting the lead paint. No work shall be started by the Contractor until the Work Plan is approved by the Engineer.

All work impacting the lead paint materials shall be conducted within an established Regulated Area with a remote wash facility/decontamination system in accordance with "C. Wash Facilities" and the OSHA Lead in Construction Standard. In accordance with 29 CFR 1926.62, engineering controls and work practices shall be utilized to prevent the spread of lead dust and debris beyond the Regulated Area and limit the generation of airborne lead. All wastes containing lead paint shall be properly contained and secured for storage, transportation and disposal.

On the pedestrian bridge, Bridge No. 04179, the Engineer has previously characterized the projected paint waste stream associated with the metal bridge components as <u>RCRA Hazardous waste</u>. If the paint is removed from the metal, the paint shall be handled and disposed of in accordance with USEPA/CTDEEP Hazardous Waste Regulations as described under this Item 0020903A.

All steel and metal components generated from the miscellaneous exterior work tasks (painted or not) shall be segregated and recycled as scrap metal. The recycling of scrap metal (regardless of lead paint concentration) is exempt from USEPA RCRA and CTDEEP Hazardous Waste Regulation.

Should lead contamination be discovered outside of the Regulated Area, the Contractor shall immediately stop all work in the Regulated Area, eliminate causes of such contamination and take steps to decontaminate non-work areas.

Special Requirements:

1. Demolition/Renovation:

    a. Demolish/renovate in a manner which minimizes the spread of lead contamination and generation of lead dust.
    b. Implement dust suppression controls, such as misters, local exhaust ventilation, etc. to minimize the generation of airborne lead dust.
    c. Segregate work areas from non-work areas through the use or barrier tape, drop cloths, etc.
    d. Clean up immediately after renovation/demolition has been completed

2. Chemical Removal:

    a. Apply chemical stripper in quantities and for durations specified by manufacturer.
    b. Where necessary, scrape lead paint from surface down to required level of removal (i.e. stabilized surface, bare substrate with no trace of residual pigment, etc.). Use sanding, hand scraping, and dental picks to supplement chemical methods as necessary.

    c. Apply neutralizer compatible with substrate and chemical agent to substrate following removal in accordance with manufacturer's instructions.
    d. Protect adjacent surfaces from damage from chemical removal.
    e. Maintain a portable eyewash station in the work area.
    f. Wear respirators that will protect workers from chemical vapors.
    g. Do not apply caustic agents to aluminum surfaces.

3. Mechanical Paint Removal:

a. Provide sanders, grinders, rotary wire brushes, or needle gun removers equipped with a HEPA filtered vacuum dust collection system. Cowling on the dust collection system for orbital-type tools must be capable of maintaining a continuous tight seal with the surface being abated. Cowling on the dust collection system for reciprocating-type tools shall promote an effective vacuum flow of loosened dust and debris. Inflexible cowlings may be used on flat surfaces only. Flexible contoured cowlings are required for curved or irregular surfaces.
b. Provide HEPA vacuums that are high performance designed to provide maximum static lift and maximum vacuum system flow at the actual operating vacuum condition with the shroud in use. The HEPA vacuum shall be equipped with a pivoting vacuum head.
c. Remove lead paint from surface down to required level of removal (i.e. stabilized surface, bare substrate with no trace of residual pigment, etc.). Use chemical methods, hand scraping, and dental picks to supplement abrasive removal methods as necessary.
d. Protect adjacent surfaces from damage from abrasive removal techniques.
e. "Sandblasting" type removal techniques shall not be allowed.

4. Component Removal/Replacement:

a. Wet down components which are to be removed to reduce the amount of dust generated during the removal process.
b. Remove components utilizing hand tools, and follow appropriate safety procedures during removal. Remove the components by approved methods which will provide the least disturbance to the substrate material. Do not damage adjacent surfaces.
c. Clean up immediately after component removals have been completed. Remove any dust located behind the component removed.

G. Prohibited Removal Methods:

The use of heat guns in excess of 700 degrees Fahrenheit to remove lead paint is prohibited.

The use of sand, steel grit, air, CO_2, baking soda, or any other blasting media to remove lead or lead paint without the use of a HEPA ventilated contained negative pressure enclosure is prohibited.

Power/pressure washing shall not be used to remove lead paint.

Compressed air shall not be utilized to remove lead paint.

Chemical strippers containing Methylene Chloride are prohibited. Any chemical stripping may be prohibited on a project by project basis.

Power tool assisted grinding, sanding, cutting, or wire brushing of lead paint without the use of cowled HEPA vacuum dust collection systems is prohibited.

Lead paint burning, busting of rivets painted with lead paint, welding of materials painted with lead paint, and torch cutting of materials painted with lead paint is prohibited. Where cutting, welding, busting, or torch cutting of materials is required, lead paint in the affected area must be removed first.

Chemical stripping of coatings from bridge components is generally prohibited unless specifically allowed on a project by project basis.

H. Clean-up and Visual Inspection:

The Contractor shall remove and containerize all lead waste material and visible accumulations of debris, paint chips and associated items.

During clean-up the Contractor shall utilize rags and sponges wetted with lead-specific detergent and water as well as HEPA filtered vacuum equipment.

The Engineer will conduct a visual inspection of the work areas in order to document that all surfaces have been maintained as free as practicable of accumulations of lead in accordance with 29 CFR 1926.62(h). If visible accumulations of waste, debris, lead paint chips or dust are found in the work area, the Contractor shall repeat the cleaning, at the Contractor's expense, until the area is in compliance. The visual inspection will detect incomplete work, damage caused by the abatement activity, and inadequate clean up of the work site.

I. Post-Work Regulated Area Deregulation:

Following an acceptable visual inspection, any engineering controls implemented may be removed.

A final visual inspection of the work area shall be conducted by the Competent Person and the Project Monitor or Engineer to ensure that all visible accumulations of suspect materials have been removed and that no equipment or materials associated with the lead paint removal remain. If this final visual inspection is acceptable, the Contractor will reopen the Regulated Area and remove all signage.

The Contractor shall restore all work areas and auxiliary areas utilized during work to conditions equal to or better than original. Any damage caused during the performance of the work activity shall be repaired by the Contractor at no additional expense to the State.

J. Waste Disposal/Recycling:

Non-metallic building debris waste materials tested and found to be non-hazardous Construction and Demolition (C&D) bulky waste shall be disposed of properly at a CTDEEP approved Solid

Waste landfill as described under this Item 0020903A.

Metallic debris shall be segregated and recycled as scrap metal at an approved metal recycling facility.

Concrete, brick, etc. coated with any amount of lead paint cannot be crushed, recycled or buried on-site to minimize waste disposal unless tested and found to meet the RSR GA/Residential standards.

Hazardous lead debris shall be disposed of as described under this Item 0020903A.

The Contractor shall comply with the latest requirements of the USEPA RCRA Hazardous Waste Regulations 40 CFR 260-274 and the DEEP Hazardous/Solid Waste Management Standards 22a-449(c).

Hazardous lead debris shall be transported from the Project by a licensed hazardous waste transporter approved by the Department and disposed of at an EPA-permitted and Department-approved hazardous waste landfill within 90 days from the date of generation.

The Contractor must use one or more of the following Department-approved disposal facilities for the disposal of hazardous waste:

Clean Earth of North Jersey, Inc., (CENJ) 115 Jacobus Avenue, South Kearny, NJ 07105 Phone: (973) 344-4004; Fax: (973) 344-8652	Clean Harbors Environmental Services, Inc. 2247 South Highway 71, Kimball, NE 69145 Phone: (308) 235-8212; Fax: (308) 235-4307
Clean Harbors of Braintree, Inc. 1 Hill Avenue, Braintree, MA 02184 Phone: (781) 380-7134; Fax: (781) 380-7193	Cycle Chem (General Chemical Corp.) 217 South First Street, Elizabeth, NJ 07206 Phone: (908) 355-5800; Fax (908) 355-0562
EnviroSafe Corporation Northeast (former Jones Environmental Services (NE), Inc.) 263 Howard Street, Lowell, MA 01852 Phone: (978) 453-7772; Fax: (978) 453-7775	Environmental Quality Detroit, Inc. 1923 Frederick Street, Detroit, MI 48211 Phone: (800) 495-6059; Fax: (313) 923-3375
Republic Environmental Systems 2869 Sandstone Drive, Hatfield, PA 19440 Phone: (215) 822-8995; Fax: (215) 997-1293	Chemical Waste Management of New York 1550 Balmer Rd., Model City, NY 14107 Phone: (800) 843-3604; Fax: (716) 754-0211
Environmental Quality Company: Wayne Disposal Facility 49350 North I-94 Service Drive Belleville, MI 48111 Phone: (800) 592-5489; Fax: (800) 592-5329	Northland Environmental, Inc. (PSC Environmental Systems) 275 Allens Avenue, Providence, RI 02905 Phone: (401) 781-6340; Fax: (401) 781-9710

The apparent low bidder shall submit in writing, within fourteen days after Bid opening, (1) a letter listing the names of the hazardous waste disposal facilities (from the above list) that the bidder, if it is awarded the Contract, will use to receive hazardous material from this Project, and

(2) a copy of each facility's acceptance criteria and sampling frequency requirements.

Any other Contractor which the Department may subsequently designate as the apparent low bidder shall make the aforementioned submissions within fourteen (14) days from the date on which the Department notifies the Contractor that it has become the apparent low bidder. If, however, the Department deems it is necessary for such a subsequent-designated Contractor to make said submissions within a shorter period of time, the Contractor shall make those submissions within the time designated by the Department.

Failure to comply with all of the above requirements may result in the rejection of the bid.

No facility may be substituted for the one(s) designated in the Contractor's submittal without the Engineer's prior approval. If the material cannot be accepted by any of the Contractor's designated facilities, the Department will supply the Contractor with the name(s) of other acceptable facilities.

Prior to the generation of any hazardous waste, the Contractor shall notify the Engineer of its selected hazardous waste transporter and disposal facility. The Contractor must submit to the Engineer (1) the transporter's current US DOT Certificate of Registration and (2) the transporter's current Hazardous Waste Transporter Permits for the State of Connecticut, the hazardous waste destination state and any other applicable states. The Engineer will then obtain on a contiguous per site basis a temporary EPA Generators ID number for the site that he will forward to the Contractor. Any changes in transporter or facility shall be immediately forwarded to the Engineer for review.

Handling, storage, transportation and disposal of hazardous waste materials generated as a result of execution of this project shall comply with all Federal, State and Local regulations including the USEPA RCRA Hazardous Waste Regulations (40 CFR Parts 260-271), the CTDEEP Hazardous Waste Regulations (22a-209 and 22a-449(c)), and the USDOT Hazardous Materials Regulations (49 CFR Part 171-180).

All debris shall be contained and collected daily or more frequently as directed by the Engineer, due to debris buildup. Debris shall be removed by HEPA vacuum collection. Such debris and paint chips shall be stored in leak-proof storage containers in the secured storage site, or as directed by the Engineer. The storage containers and storage locations shall be reviewed by the Engineer and shall be located in areas not subject to ponding. Storage containers shall be placed on pallets and closed and covered with tarps at all times except during placement, sampling and disposal of the debris.

Hazardous waste materials are to be properly packed and labeled for transport by the Contractor is accordance with EPA, CTDEEP and USDOT regulations. The disposal of debris characterized as hazardous waste shall be completed within 90 calendar days of the date on which it began to be accumulated in the lined containers. Storage of containers shall be in accordance with current DEEP/EPA procedures.

The Contractor shall label hazardous waste storage containers with a 6-inch square, yellow, weatherproof, Hazardous Waste sticker in accordance with USDOT regulations.

Materials other than direct paint related debris which are incidental to the paint removal work activities (tarps, poly, plywood, PPE, gloves, decontamination materials, etc.) which may be contaminated with lead, shall be stored separately from the direct paint debris, and shall be sampled by the Engineer for waste disposal characterization testing. Such materials characterized as hazardous shall be handled/disposed of as described herein, while materials characterized as non-hazardous shall be disposed of as non-hazardous CTDEEP Solid Waste.

Direct paint related debris materials not previously sampled and characterized for disposal, which may be originally presumed to be hazardous waste, shall also be stored separately and sampled by the Engineer for ultimate waste disposal characterization testing and handled/disposed of based on that testing.

Project construction waste materials unrelated to the paint removal operations shall NOT be combined/stored with paint debris waste and/or incidental paint removal materials as they are not lead contaminated and shall NOT be disposed of as hazardous waste. The Engineer's on-site Inspectors shall conduct inspections to verify materials remain segregated.

The Contractor shall obtain and complete all paperwork necessary to arrange for material disposal, including disposal facility waste profile sheets. It is solely the Contractor's responsibility to co-ordinate the disposal of hazardous materials with its selected treatment/recycling/disposal facility(s). Upon receipt of the final approval from the facility, the Contractor shall arrange for the loading, transport and treatment/recycling/disposal of the materials in accordance with all Federal and State regulations. **No claim will be considered based on the failure of the Contractor's disposal facility(s) to meet the Contractor's production rate or for the Contractor's failure to select sufficient facilities to meet its production rate.**

The Contractor shall process the hazardous waste such that the material conforms with the requirements of the selected treatment/disposal facility, including but not limited to specified size and dimension. Refusal on the part of the treatment/disposal facility to accept said material solely on the basis of non-conformance of the material to the facility's physical requirements is the responsibility of the Contractor and no claim for extra work shall be accepted for reprocessing of said materials to meet these requirements.

All DOT shipping documents, including the Uniform Hazardous Waste Manifests utilized to accompany the transportation of the hazardous waste material shall be prepared by the Contractor and reviewed/signed by an authorized agent representing ConnDOT, as Generator, for each load of hazardous material that is packed to leave the site. The Contractor shall not sign manifests on behalf of the State as Generator. The Contractor shall forward the appropriate original copies of all manifests to the Engineer the same day the material leaves the Project site.

Materials not related to lead paint removal and/or characterized as non-hazardous waste shall NOT be shipped for hazardous waste disposal in accordance with USEPA RCRA hazardous waste minimization requirements.

A load-specific certificate of disposal, signed by the authorized agent representing the waste disposal facility, shall be obtained by the Contractor and promptly delivered to the Engineer for each load.

In addition to all pertinent Federal, State and local laws or regulatory agency polices, the Contractor shall adhere to the following precautions during the transport of hazardous materials off-site:

- All vehicles departing the site are to be properly logged to show the vehicle identification, driver's name, time of departure, destination, and approximate volume, and contents of materials carried. Vehicles shall display the proper USDOT placards for the type and quantity of waste;
- No materials shall leave the site unless a disposal facility willing to accept all of the material being transported has agreed to accept the type and quantity of waste;
- Documentation must be maintained indicating that all applicable laws have been satisfied and that the materials have been successfully transported and received at the disposal facility; and,
- The Contractor shall segregate the waste streams (i.e. concrete, wood, etc.) as directed by the receiving disposal facility.

Any spillage of debris during disposal operations during loading, transport and unloading shall be cleaned up in accordance with EPA 40 CFR 265 Subparts C & D, at the Contractor's expense.

The Contractor is liable for any fines, costs or remediation costs incurred as a result of their failure to be in compliance with this Item and all Federal, State and Local laws.

K. Project Closeout Data:

Provide the Engineer, within thirty (30) days of completion of the project site work, a compliance package; which shall include, but not be limited to, the following:

1. Competent persons (supervisor) job log;
2. OSHA-compliant personnel air sampling data;
3. <u>Completed</u> waste shipment papers for non-hazardous lead construction and demolition (C&D) waste disposal or recycling and scrap metal recycling.
4. Copies of completed Hazardous Waste Manifests (signed by authorized disposal facility representative).

Method of Measurement:

The completed work shall be paid as a lump sum. This item will include all noted services, equipment, facilities, testing and other associated work for up to three (3) ConnDOT project representatives. Services provided to any ConnDOT project representatives in excess of three (3) representatives will be measured for payment in accordance with Article 1.09.04 – "Extra and Cost-Plus Work."

Basis of Payment:

The lump sum price bid for this item shall include: services, materials, equipment, all permits, notifications, submittals, personal air sampling, personal protection equipment, temporary enclosures, incidentals, fees and labor incidental to activities impacting lead removal, treatment and handling of lead contaminated materials, and the transport and disposal of any hazardous and/or non-hazardous lead construction and demolition (C&D) bulky waste.

Final payment will not be made until all project closeout data submittals have been completed and provided to the Engineer. Once the completed package has been received in its entirety and accepted by the Engineer, final payment will be made to the Contractor.

Pay Item	Pay Unit
Lead Compliance for Miscellaneous Exterior Tasks	Lump Sum

ITEM #0108100A - LUMP SUM INCENTIVE PAYMENT (ESTIMATED COST)

Description: Under this item, the Contractor will receive any Lump Sum Incentive Payment(s) earned in accordance with the CONTRACT TIME AND LIQUIDATED DAMAGES and NOTICE TO CONTRACTOR – PERMITTED CLOSURE OF ROUTE 99 INCENTIVE/DISINCENTIVE PAYMENTS included in these Special Provisions.

Basis of Payment: The "Lump Sum Incentive Payment" will be calculated using the method indicated in the CONTRACT TIME AND LIQUIDATED DAMAGES and NOTICE TO CONTRACTOR – PERMITTED CLOSURE OF ROUTE 99 INCENTIVE/DISINCENTIVE PAYMENTS.

The sum of money shown on the estimate, and in the itemized proposal as "Estimated Cost" for this item will be considered the bid price although payment will be made as described above. The estimated cost figure is not to be altered in any manner by the bidder. If the bidder should alter the amount shown, the altered figure will be disregarded and the original cost figure will be used to determine the amount of the bid for this Contract.

Pay Item	Pay Unit
Lump Sum Incentive Payment (Estimated Cost)	EST.

ITEM #0201013A - REMOVAL OF EXISTING FENCE

Description: This item shall consist of removing existing fences as indicated on the plans or as ordered by the Engineer.

Materials: Vacant.

Construction Methods: The existing fence, with all appurtenances including fabric, hardware, posts, and posts bases, shall be removed and promptly disposed of by the Contractor. If posts are embedded in concrete, the existing concrete bases shall be removed and disposed of. Old post holes shall be backfilled with suitable material properly compacted. Fence materials that have been removed shall not be stored or stockpiled on-site.

For fence posts that are embedded in walls, posts shall be cut cleanly at the base. Once the existing posts are cut, the Contractor shall core out around the remaining section of embedded posts. The diameter of the cored hole shall be approximately 1" to 2" larger than the diameter of the post. Any damage to the wall resulting from the removal of fence posts shall be repaired by the Contractor at no additional cost to the Department. Holes remaining in the walls after the posts are removed and cored out shall be filled with non-shrink grout conforming to the requirements of Article M.03.05. The holes may be reused for new posts if applicable and approved by the engineer.

Method of Measurement: The length of removed fence measured for payment shall be the number of linear feet of completed fence, measured along the top of fence from outside to outside of end posts.

Basis of Payment: This work will be paid for at the contract unit price per linear foot for "Removal of Existing Fence", which price shall include all materials, equipment, tools, excavation, backfill, disposal of surplus material, and labor incidental thereto.

Pay Item	Pay Unit
Removal of Existing Fence	L.F.

ITEM #0202216A - EXCAVATION AND REUSE OF EXISTING CHANNEL BOTTOM MATERIAL

Description:

Work under this item shall consist of excavating existing channel bottom material in areas where the channel bottom is to be re-graded or disturbed to create a work area for a culvert or bridge or articulated concrete block placement and cofferdam installation. This item shall also include stockpiling and protecting the excavated material on the project site, subsequent placement of the stockpiled material in the channel, removal and proper disposal off-site of all unused material.

Materials:

The material for this item shall consist of the existing naturally formed cobbles, gravel, soils and clean natural sediment from within the channel.

Rock excavated from ledge (bedrock) formations, or broken from larger boulders, will not be accepted. Broken concrete will not be accepted.

If an insufficient quantity of material is available from the existing channel bottom at this site, the Contractor shall furnish supplemental material meeting the approval of the Office of Environmental Planning (OEP) from other sources within the project limits, or from another approved source. Material the Contractor proposes to bring to the site from another source must be inspected and approved by the OEP at the source prior to the excavation or hauling of the material. A minimum notice of 2 weeks must be given to the OEP for inspection and approval.

Bank run gravel, if approved for use as supplemental material, shall be uncrushed, conforming to the requirements of M.02.02-1 of the State of Connecticut Department of Transportation Standard Specifications for Roads, Bridges and Incidental Construction Form 816.

Construction Methods:

The Contractor shall prepare an area, approved by the Engineer, suitable in size and location for storing the excavated channel bottom material, so that it will not be contaminated, mixed with other excavated material or erode. Select a location where disruption to the channel and wetland areas caused by moving the excavated material to and from the stockpile is minimized. Locate the stockpile where it can remain undisturbed for the duration of the culvert construction. Identify the temporary stockpile area(s) prior to the start of excavation for approval by the Engineer.

Prepare a clean surface for the stockpile adequate to prevent mixing with the underlying soil or other material. Provide adequate measures to contain the stockpiled material and protect it from erosion by rain or other forces. Store material excavated from the existing channel bottom separately from other excavated materials until it may be reused or disposed of, as directed by

the Engineer. Do not add any other excavated or imported material to the stockpile of channel bottom material.

After clearing and grubbing, the Engineer will identify the limits of exposed channel bottom material to be excavated under this item. Only areas within the limits of channel to be re-graded or disturbed to create a work area for the culvert or bridge or articulate concrete block placement and cofferdam placement will be identified for excavation. As much material as possible, will be identified for this excavation. The Engineer will identify the bottom limit of the excavation based on the qualities of the material encountered. Do not in any case excavate below the depth otherwise required for culvert or bridge and cofferdams, including any unsuitable material excavation. Perform the excavation separately, prior to beginning any other roadway, structure, channel, or unsuitable material excavation in the area.

The Contractor shall perform all containment, diversion, or other separation of the channel flow from the excavation of channel bottom material in accordance with the requirements of "Handling Water".

Complete all stages of the culvert or bridge or articulated concrete block construction and cofferdam installation, to the satisfaction of the Engineer, before placing any existing channel bottom material. Notify the OEP at least 10 days prior to initiating the placement of channel bottom material in the channel. Any and all coordination with the Department of Energy and Environmental Protection (DEEP) or District Environmental Coordinator will be done through the OEP.

Place the channel bottom material to the thickness and in the locations shown on the plans, and as directed by the Engineer or OEP. Use equipment and placement techniques that will prevent integration with the surrounding material and keep the channel bottom material relatively homogeneous. Place the channel material in a manner that replicates the original condition of the channel, with a well-defined low flow channel connecting to the existing channel.

Place or dispose of any surplus or unsuitable material in accordance with Section 2.02. Restore the stockpile area as directed by the Engineer.

All material not identified for excavation in accordance with this specification shall be excavated, as required for other contract work, in accordance with Section 2.02.

Method of Measurement:

Work under this item will be measured for payment by the actual number of cubic yards of channel bottom material excavated and stockpiled in accordance with this specification. The Engineer will delineate the horizontal pay limits before the start of excavation. The vertical pay limits will be measured from the existing channel bottom to the bottom of the excavation required specifically for the stockpiling of existing channel bottom material.

Material excavated beyond the approved horizontal pay limits, or deeper that the depth of channel bottom material identified and approved by the Engineer will not be measured for payment under this item. Such additional excavation required to complete the contract work, including roadway, structure, channel, and unsuitable material excavation, will be measured for payment separately under the applicable pay items. In no case will excavated material be measured for payment under more than one pay item.

The storage, re-excavation, placement and/or disposal of the channel bottom material will not be measured for payment.

Basis of Payment: Payment for this work will be made at the contract unit price per cubic yard for "Excavation and Reuse of Existing Channel Bottom Material". The price shall include all materials, equipment, tools and labor incidental to the preparation of the stockpile area, excavation of channel bottom, hauling of the material to the stockpile area, storing, protecting, and final placement of the excavated channel bottom material. The price shall also include the removal and placement or disposal of surplus or unsuitable excavated material.

If bank run gravel is required and approved for use as supplemental material at the site, furnishing and placing the bank run gravel will be paid for as extra work, in accordance with Article 1.04.05.

Payment for all containment, diversion, or other separation of the Stream flow from the excavation of channel bottom material will be included in the item "Handling Water" or “Cofferdam and Dewatering”.

Payment for clearing and grubbing will be included in the item “Clearing and Grubbing”.

Excavation of material not identified by the Engineer for stockpiling and re-use in accordance with this specification will be paid in accordance with Section 2.02.

Pay Item	Pay Unit
Excavation and Reuse of Existing Channel Bottom Material	C.Y.

ITEM #0202452A - TEST PIT

Description: Test pits shall be performed for determining the location of underground utilities. This work shall consist of the removal and satisfactory disposal of all materials, the removal of which is necessary for the proper completion of the work, at the locations shown on the plans or as ordered, and backfilling, all in accordance with these specifications.

Utility facilities to be located shall include pipes, conduits, service connections, structures, tanks, utility appurtenances, and any miscellaneous items directed by the Engineer such as telltales/markers on the existing pipes, etc.

Construction Methods: Test pits shall be made in conformity with the requirements of the plans or as ordered by the Engineer. The Contractor shall furnish and employ such shores, braces, pumps, etc., as may be necessary for the protection of property, proper completion of the work and the safety of the public and employees of the Contractor and the Department. All bracing, etc., shall be removed when no longer required for the construction or safety of the work.

Wherever portions of existing full-depth bituminous concrete pavement are to be removed in conjunction with test pits, they shall be removed to neat lines. Where the limits of the areas in which such bituminous pavement is to be removed are adjacent to existing bituminous concrete pavement that is to remain in place, the limits shall be cut by a method approved by the Engineer.

The Contractor shall perform field surveys to establish the horizontal and vertical location and to document the type and size of the utilities at each test pit. The work shall be performed in accordance with the requirements of Section 9.80, Construction Staking. The Contractor shall furnish the Engineer copies of all test pit data.

After the test pit is completed, the Contractor shall notify the Engineer. The test pit shall not be backfilled until directed by the Engineer.

When backfilling is required, the material used shall be of a quality satisfactory to the Engineer and shall be free from large or frozen lumps, wood and other extraneous material. All backfill placed below subgrade shall be placed in layers of not more than 6 inches (150 millimeters) in depth after compaction and shall be thoroughly compacted by means of mechanical rammers or vibrators or by pneumatic tampers. Hand tampers shall be used only upon written permission of the Engineer. Unless otherwise ordered by the Engineer, the backfill shall be brought to the surface of the surrounding ground or subgrade and neatly graded.

All suitable material removed in making the excavation shall be used for backfill if required. All surplus or unsuitable material shall be removed and disposed of as directed. Should additional material be required for backfilling, it may be obtained from the Project excavation or from borrow pits, gravel pits, or elsewhere as the Engineer may direct.

Method of Measurement: Test pits will be measured as each excavated, backfilled, surveyed, documented and accepted. There will be no separate measurement for mobilization and demobilization associated with this item.

Basis of Payment: Test Pits will be paid for at the contract unit price each complete in place and accepted, which price shall include all materials, equipment, tools, surveys, and labor incidental thereto.

The price shall also include backfilling, patching roadways and sidewalks in kind, restoration of the ground where required and the disposal of surplus material. No additional payment will be made for shoring, bracing, pumping, and bailing or for material or equipment necessary for the satisfactory completion of the work. If "Granular Fill" or "Reuse Stockpiled Materials" are used for backfill, payment will be made at their respective contract unit prices.

Pay Item	Pay Unit
Test Pit	EA.

ITEM #0204151A - HANDLING WATER

Description: Work under this item shall consist of the construction of such cofferdams, flow diversions, barriers, diversion pipes, plastic seal liner or other such protective facilities and methods necessary for the conduction of water beyond the limits of construction; the dewatering of the site on which the permanent structure is to be constructed; and the removal of all such temporary structures and facilities upon the completion of the permanent work or as required. The handling of water shall be in accordance with the requirements of Section 1.10.

For the purposes of this specification, such work shall be understood to mean any temporary type of protective facility which complies with the water handling plan indicated in the contract and which satisfies the condition that the permanent structure be built in the dry. The handling of flood flows and the protection of existing structures, and any or all of the finished construction during high water are included in the scope of work under this item.

Materials: None.

Construction Methods: The Contractor shall investigate and verify existing stream conditions and design the necessary protection and facilities to conform to the water handling plan shown in the contract. Before commencing construction the Contractor shall furnish the Engineer with details of the plan and methods he proposes to use for handling water and accomplishing the work. The furnishing of such plans and methods shall not relieve the Contractor of any of his responsibility for the safety of the work and for the successful completion of the project.

The height of any cofferdams, flow diversions, or barriers shall be as called for in the contract. Any necessary diversion pipes shall be installed in accordance with the contract. All such temporary structures or facilities shall be safely designed for all applicable loadings, extended to sufficient depth and be of such dimensions and water-tightness so as to assure construction of the permanent work in the dry. They shall not interfere with proper performance of the work. Their locations shall be such as to permit excavation for permanent work to the limits shown on the plans. Interior dimensions shall give sufficient clearance for construction and inspection of forms. Movements or failures of the temporary protection facilities, or any portions thereof, which prevent proper completion of the permanent work shall be corrected at the sole expense of the Contractor.

Any pumping from within the areas of construction shall be done in such a manner as to prevent the possibility of movement of water through any fresh concrete. No pumping will be permitted during placing of concrete or for a period of 24 hours thereafter, unless it is done from a suitable sump pump properly located and with a capacity to protect against damage from sudden rising of water. Any pumped water must be discharged in accordance with the requirements of Section 1.10.

Unless otherwise provided, or directed, all such temporary protective work shall be removed and disposed of in an approved manner when no longer required.

The Contractor shall be responsible for the scheduling of work under this item so as not to interfere with any sequence of operations developed for this project. Delays as a result of work required under this item shall not constitute a claim for an extension of contract time.

Method of Measurement: This item, being paid for on a lump sum basis, will not be measured for payment.

Basis of Payment: Payment for this item will be made at the lump sum price for "Handling Water", complete and accepted, which price shall include all tools, materials, equipment, labor and work incidental to the construction; reconstruction, if required; dewatering, including pumping and any related environmental controls used in handling water**;** handling of the stream flow during construction; the removal and disposal of all protective works or facilities; disposal of water removed from the construction; damages incurred by the Contractor; and any damage to existing facilities and to the work in progress, materials or equipment from flows or high stages of the stream. No additional payment will be made to move materials and equipment during high flows and no claims for delay may result due to conditions that mandate evacuation of the site.

Pay Item	Pay Unit
Handling Water	L.S.

ITEM #0213000A - GRAVEL FILL

Description: This item shall consist of furnishing and placing gravel fill of the size and thickness indicated on the plans, which include spreading the gravel over standard rip rap areas shown on the plans, or as ordered by the Engineer, and clouting the gravel into the voids in the riprap.

Materials: The material for this work shall conform to the requirements of Article M.02.01 for Gravel Fill.

Construction Methods: The Contractor shall evenly place the gravel fill over the areas of standard rip rap before placing the native streambed material or topsoil. The gravel shall be spread and clouted to fill in the voids in the standard rip rap, to the satisfaction of the Engineer.

Method of Measurement: Horizontal payment limits for gravel fill shall coincide with the limits of the standard riprap as shown on the plans and ordered by the Engineer. The thickness shall be as indicated on the plans.

Basis of Payment: This work will be paid for at the contract unit price per cubic yard for "Gravel Fill," complete in place, which price shall include all materials, tools, equipment and work incidental thereto.

Pay Item	Pay Unit
Gravel Fill	c.y.

ITEM #216011A - FLOWABLE FILL

Description: This work shall consist of furnishing and placing flowable fill to fill under the concrete sidewalk as shown on the plans and as directed by the Engineer.

Materials: The materials for this work shall conform to the requirements of Article M.03.01.

Construction Methods: Flowable fill shall be a mixture of Portland Cement, Fly Ash (optional), Fine Aggregates, Air Entraining agent, and water.

The Contractor shall be responsible for producing a flowable fill mixture and adjusting this mix design as called for by the circumstances or as directed by the Engineer. This mix design shall be submitted to the Engineer for approval prior to its use.

There shall be a minimum air content of 8% in the flowable fill. Flowable fill material shall be proportioned to produce a 28-day compressive strength of 100 psi. Flowable fill shall be produced and delivered using concrete construction equipment. Placing flowable fill shall be by chute, pumping, or other method approved by the Engineer.

The flowable fill shall be placed so as to fill the limits shown on the plans. All necessary means to confine the flowable fill to the designated limits shall be provided by the Contractor.

Mixing and placing of flowable fill may only begin if the air temperature is 35 degrees F. and rising. At time of placement, flowable fill shall have a temperature of at least 40 degrees F. Mixing and placing shall stop when the air temperature is 40 degrees F. and falling.

Method of Measurement: The quantity of flowable fill measured for payment shall be the actual volume in cubic yards completed and accepted within the pay limits shown on the plans or as ordered by the Engineer.

Basis of Payment: This material will be paid for at the contract unit price per cubic yard for "Flowable Fill", complete in place, which price shall include all materials, equipment, tools, labor, and work incidental thereto.

Pay Item	Pay Unit
Flowable Fill	c.y.

ITEM #0406275A - FINE MILLING OF BITUMINOUS CONCRETE (0 TO 4 INCHES)

Description: This work shall consist of the milling, removal, and disposal of existing bituminous concrete pavement.

Construction Methods: The Contractor shall remove the bituminous concrete material using means acceptable to the Engineer. The pavement surface shall be removed to the line, grade, and existing or typical cross-section shown on the plans or as directed by the Engineer.

The bituminous concrete material shall be disposed of offsite by the Contractor at an approved disposal facility unless otherwise stated in the Contract.

Any milled surface, or portion thereof, that is exposed to traffic shall be paved within five (5) calendar days unless otherwise stated in the plans or Contract.

The equipment for milling the pavement surface shall be designed and built for milling bituminous concrete pavements. It shall be self propelled with sufficient power, traction, and stability to maintain depth and slope and shall be capable of removing the existing bituminous concrete pavement.

The milling machine shall be equipped with a built-in automatic grade averaging control system that can control the longitudinal profile and the transverse cross-slope to produce the specified results. The longitudinal controls shall be capable of operating from any longitudinal grade reference, including string line, contact ski (30 feet minimum), non-contact ski (20 feet minimum), or mobile string line (30 feet minimum). The transverse controls shall have an automatic system for controlling cross-slope at a given rate. The Engineer may waive the requirement for automatic grade or slope controls where the situation warrants such action.

The machine shall be able to provide a 0 to 4 inch deep cut in one pass. The rotary drum of the machine shall use carbide or diamond tipped tools spaced not more than $^{5}/_{16}$ inch apart. The forward speed of the milling machine shall be limited to no more than 45 feet/minute. The tools on the revolving cutting drum must be continually maintained and shall be replaced as warranted to provide a uniform pavement texture.

The machine shall be equipped with an integral pickup and conveying device to immediately remove material being milled from the surface of the roadway and discharge the millings into a truck, all in one operation. The machine shall also be equipped with a means of effectively limiting the amount of dust escaping from the milling and removal operation.

When milling smaller areas or areas where it is impractical to use the above described equipment, the use of a lesser equipped milling machine may be permitted when approved by the Engineer.

Protection shall be provided around existing catch basin inlets, manholes, utility valve boxes, and any similar structures. Any damage to such structures as a result of the milling operation is the Contractor's responsibility and shall be repaired at the Contractor's expense.

To prevent the infiltration of milled material into the storm drainage system, the Contractor shall take special care to prevent the milled material from falling into the inlet openings or inlet grates. Any milled material that has fallen into inlet openings or inlet grates shall be removed at the Contractor's expense.

Surface Tolerance: The milled surface shall provide a satisfactory riding surface with a uniform textured appearance. The milled surface shall be free from gouges, longitudinal grooves and ridges, oil film, and other imperfections that are a result of defective equipment, improper use of equipment, or poor workmanship. The Contractor, under the direction of the Inspector, shall perform random spot-checks with a Contractor supplied ten-foot straightedge to verify surface tolerances at a minimum of five (5) locations per day. The variation of the top of two ridges from the testing edge of the straightedge, between any two ridge contact points, shall not exceed ¼ inch. The variation of the top of any ridge to the bottom of the groove adjacent to that ridge shall not exceed ¼ inch. Any unsatisfactory surfaces produced are the responsibility of the Contractor and shall be corrected at the Contractor's expense and to the satisfaction of the Engineer.

The depth of removal will be verified by taking measurements every 250 feet per each pass of the milling machine, or as directed by the Engineer. These depth measurements shall be used to monitor the average depth of removal.

Where a surface delamination between bituminous concrete layers or a surface delamination of bituminous concrete on Portland cement concrete causes a non-uniform texture to occur, the depth of milling shall be adjusted in small increments to a maximum of +/- ½ inch to eliminate the condition.

When removing bituminous concrete pavement entirely from an underlying Portland cement concrete pavement, all of the bituminous concrete pavement shall be removed leaving a uniform surface of Portland cement concrete, unless otherwise directed by the Engineer.

Any unsatisfactory surfaces produced by the milling operation are the Contractor's responsibility and shall be corrected at the Contractor's expense and to the satisfaction of the Engineer.

No vertical faces, transverse or longitudinal, shall be left exposed to traffic unless the requirements below are met. This shall include roadway structures (catch basins, manholes, utility valve boxes, etc.). If any vertical face is formed in an area exposed to traffic, a temporary paved transition shall be established according to the requirements shown on the plans. If the milling machine is used to form a temporary transition, the length of the temporary transition shall conform to Special Provision Section 4.06 –Bituminous Concrete, "Transitions for Roadway Surface," the requirements shown on the plans, or as directed by the Engineer. At all

permanent limits of removal, a clean vertical face shall be established by saw cutting prior to paving.
Roadway structures shall not have a vertical face of greater than one (1) inch exposed to traffic as a result of milling. All structures within the roadway that are exposed to traffic and greater than one (1) inch above the milled surface shall receive a transition meeting the following requirements:

For roadways with a posted speed limit of 35 mph or less*:

1. Round structures with a vertical face of greater than 1 inch to 2.5 inches shall be transitioned with a hard rubber tapered protection ring of the appropriate inside diameter designed specifically to protect roadway structures.
2. Round structures with a vertical face greater than 2.5 inches shall receive a transition of bituminous concrete formed at a minimum 24 to 1 (24:1) taper in all directions.
3. All rectangular structures with a vertical face greater than 1 inch shall receive a transition of bituminous concrete formed at a minimum 24 to 1 (24:1) taper in all directions.

*Bituminous concrete tapers at a minimum 24 to 1 (24:1) taper in all directions may be substituted for the protection rings if approved by the Engineer.

For roadways with a posted speed limit of 40, 45 or 50 mph:

1. All structures shall receive a transition of bituminous concrete formed at a minimum 36 to 1 (36:1) taper in the direction of travel. Direction of travel includes both the leading and trailing side of a structure. The minimum taper shall be 24 to 1 (24:1) in all other directions.

For roadways with a posted speed limit of greater than 50 mph:

1. All structures shall receive a transition of bituminous concrete formed at a minimum 60 to 1 (60:1) taper in the direction of travel. Direction of travel includes both the leading and trailing side of a structure. The minimum taper shall be 24 to 1 (24:1) in all other directions.

All roadway structure edges and bituminous concrete tapers shall be clearly marked with fluorescent paint. The paint shall be maintained throughout the exposure to traffic.

The milling operation shall proceed in accordance with the requirements of the “Maintenance and Protection of Traffic” and “Prosecution and Progress” specifications, or other Contract requirements. The more stringent specification shall apply.

Prior to opening an area which has been milled to traffic, the pavement shall be thoroughly swept with a sweeper truck. The sweeper truck shall be equipped with a water tank and be capable of removing the millings and loose debris from the surface. The sweeper truck shall operate at a forward speed that allows for the maximum pickup of millings from the roadway surface. Other

sweeping equipment may be provided in lieu of the sweeper truck where acceptable by the Engineer.

Any milled area that will not be exposed to live traffic for a minimum of 48 hours prior to paving shall require a vacuum sweeper truck in addition to, or in lieu of, mechanical sweeping. The vacuum sweeper truck shall have sufficient power and capacity to completely remove all millings from the roadway surface including any fine particles within the texture of the milled surface. Vacuum sweeper truck hose attachments shall be used to clean around pavement structures or areas that cannot be reached effectively by the main vacuum. Compressed air may be used in lieu of vacuum attachments if approved by the Engineer.

Method of Measurement: This work will be measured for payment by the number of square yards of area from which the milling of asphalt has been completed and the work accepted. No area deductions will be made for minor unmilled areas such as catch basin inlets, manholes, utility boxes and any similar structures.

Basis of Payment: This work will be paid for at the Contract unit price per square yard for "Fine Milling of Bituminous Concrete (0 to 4 Inches)." This price shall include all equipment, tools, labor, and materials incidental thereto.

No additional payments will be made for multiple passes with the milling machine to remove the bituminous surface.

No separate payments will be made for cleaning the pavement prior to paving; providing protection and doing handwork removal of bituminous concrete around catch basin inlets, manholes, utility valve boxes and any similar structures; repairing surface defects as a result of the Contractors negligence; providing protection to underground utilities from the vibration of the milling operation; removal of any temporary milled or paved transition; removal and disposal of millings; furnishing a sweeper truck and sweeping after milling. The costs for these items shall be included in the Contract unit price.

Pay Item	Pay Unit
Fine Milling of Bituminous Concrete (0 to 4 Inches)	S.Y.

ITEM #0601091A - SIMULATED STONE MASONRY

Description:

This item shall consist of furnishing and installing textured and colored formed concrete surfaces using simulated stone molds (form liners) and a color staining system designed to duplicate closely the appearance of natural stone as described herein of the type and size called for on the plans, including accessories and hardware and in accordance with these specifications. The architectural form liner simulated stone masonry shall be monolithically formed with the reinforced concrete wall.

Materials:

1. Quality Of Work: The process of form lining, texturing and color staining of the hardened concrete shall be performed in strict accordance with the manufacturer's written recommendations and as approved by the Engineer.

2. The design and pattern of form lined concrete surfaces shall follow the layout shown on the contract plans and the manufacturer's standard drawing. Final coloration of cast stone concrete surfaces shall closely simulate the appearance of real stone.

3. Quality Assurance:

    a. Manufacturer of Simulated Stone Molds and Custom Coloring Systems shall have five years experience making custom simulated stone molds and color stains to create formed concrete surfaces to match natural stone shapes, surface textures and colors.

    b. Contractor/Subcontractor (installer) shall have five years experience pouring vertically formed architectural concrete. The installer shall be trained in the manufacturer's special techniques in order to achieve realistic surfaces.

    c. Color Stain System Application shall be performed by the manufacturer or manufacturer's authorized representative. The stain shall be applied by an applicator who has experience with similar projects.

    d. A Pre-installation Meeting shall be scheduled with the manufacturer's representative, installer, designer, and Department inspection personnel to assure understanding of simulated stone masonry use, color staining application, and to coordinate the work.

4. Protection: The contractor is solely responsible for construction methods, means, techniques, and for construction site safety precautions. The contractor shall conduct all construction operations in conformance with all applicable local, state and federal safety laws, rules,

regulations and codes. All Material Safety Data Sheets (MSDS) shall be available for inspection.

5. Manufacturer: Subject to compliance with the design and specification requirements, the contractor shall provide simulated stone masonry and color staining system as manufactured by Custom Rock International, Inc., St. Paul, Minnesota, or approved equivalent.

6. Materials:

   a. Simulated Stone Molds (form liners) shall be made of reusable elastomeric form liners, made of high-strength urethane and cutable form liners, made of lower grade urethane, easily attachable to forms. Formliners shall leave crisp, sharp definition of the architectural surface. Recurring textural configurations exhibited by repeating, recognizable shadow patterns shall be prevented by proper casting of formliner patterns. Form liners shall not compress more than 1/4 inch when concrete is poured at a rate of 10 vertical feet per hour. Form liners shall be removable without causing deterioration of surface or underlying concrete. No substitutions will be permitted.

   b. The form liner shall conform to the Pattern No. 1208K "Drystack" manufactured by Custom Rock International, St. Paul, Minnesota, or an approved equivalent pattern as shown on the plans with a maximum relief of 2", and including texture and color staining system.

   c. The form liner shall be designed to permit 180 degree rotation and interconnection with itself or another pattern liner of differing horizontal dimension. Maximum relief of pattern and the average relief shall be as shown on the contract plans. The simulated stone pattern shall vary in a random manner in the coursing parameters to prevent noticeable multiple duplicate pattern repetition and avoid stacked joints.

   d. In addition to orthogonal surfaces, the form liner shall be capable of forming curved and/or battered surfaces, if shown on the plans, while maintaining the dimensioned coursing and plumb vertical joints without distortion.

7. Release Agent: The release agent shall be compatible with simulated stone masonry and with color staining system to be applied to surface, as recommended by the manufacturer.

8. Form Ties: Form ties shall be designed to separate at least one inch back from finished surface, leaving only a neat hole that can be plugged with compatible patching material.

9. Color Stain: The color stain shall be a penetrating stain mix as provided by the manufacturer, shall achieve color variations present in the natural stone being simulated for the project, as approved by the Engineer and in accordance Items 1 and 2 above. The stain shall create a surface finish that is breathable (allowing water vapor transmission), and that resists deterioration from water, acid, alkali, fungi, sunlight or weathering. The stain mix shall be a water borne, low V.O.C. material, less than 180 grams/liter, and shall meet

requirements for weathering resistance of 2000 hours accelerated exposure measured by weather-o-meter in accordance with ASTM G23 with 3-bulb. Scrub test 1000 revolutions. Abrasive resistance (Tabor-CF-10) 500 cycles. Adhesion ASTM D3359 1.OOMM cross cuts on glass pass 3 or higher on a scale of 1 to 5. The contractor shall supply information pertaining to chemical resistance in accordance with ASTM D1308.

Construction Methods:

1. Shop Drawings and Submittals: Before fabricating any materials, the contractor shall submit shop drawings, product data sheets and samples to the Engineer for approval in accordance with Article 1.05.02 for the materials listed in Item 3 below. These drawings and submittals shall include, but not be limited to, the following information: manufacturer's name, listing of product compliance with referenced specification standards, complete details of the assemblies, material designations, nominal hardness of appropriate materials, design loads, quantities and locations. The Engineer's drawings shall not be reproduced, traced or used for shop drawings or erection purposes.

2. Field Measurements: Prior to ordering or fabricating any materials, the contractor shall take complete and accurate field measurements.

3. Submittals:

    a. Catalog cuts, manufacturer's literature, and technical data for the materials specified herein, including but not limited to simulated stone mold pattern, form liner, release agent, concrete patching material and color charts for staining of hardened concrete.

    b. Photographs: Color photographs of three (3) similar past projects of the manufacturer. Include project names, locations and a telephone number of the previous projects Owner's representatives.

    c. Samples: Form ties, sample and description, showing method of separation when forms are removed.

    d. Plan, elevation and details to show overall pattern, joint locations, form tie locations, and end, edge and other special conditions.

4. Scheduling: Schedule color stain application with earthwork and back filling of any wall areas making sure that all simulated stone texture is colored to the minimum distance below grade. Delay adjacent plantings until color application is completed. Coordinate the work to prevent interference with other trades.

5. Test Panels: At least 30 days prior to construction of the first textured and colored concrete surfaces, the Contractor shall prepare a test panel with a full scale field mock-up of the formed concrete surface (4’ x 4’) showing the proposed color, pattern, joint treatment and layout as shown on the plans or in the Manufacturer’s catalog. If the resulting appearance is not acceptable to the Engineer, adjustments shall be made to the color, pattern, finished texture and/or joint treatment and another test panel shall be prepared for inspection. The accepted mock-up shall provide the standard for the work.

6. Installation:

    a. Contractor's responsibilities:

        1. Install liners.
        2. Apply manufacturer release agent.
        3. Install concrete as specified elsewhere in the Specifications.
        4. Remove form liner.
        5. Patching, grinding and bush hammering of form liner seams as required.
        6. Provide scaffolding and heat as required, and clean water for power washing of the hardened concrete prior to the staining process.
        7. Power washing and patching of form liners.
        8. Return of form liners to manufacturer.

    b. Manufacturer's responsibilities:

        1. Ship and supply form liners and release agent.
        2. Technical information.
        3. Power wash wall.
        4. Apply the color staining process.

7. Liner to Form Attachment System: Securely attach form liners to forms with wood or sheet metal screws; threaded inserts added to the back of the form liner for bolts to fasten the form liner through the forms, or; bolted through the face of the form liner with flat head bolts inserted in a pattern joint and through the form liner and forming system. Construction adhesives may be used, but not on reusable forms. Place adjacent form liners with less than 1/4 inch separation between form liners.

8. Release of Form Liners From Hardened Concrete: Only manufacturer recommended form release agents (Lark V or Orna Con) shall be utilized and shall be applied to the form liners before the concrete is poured. Release agents shall be applied in strict accordance with release agent manufacturer recommendations. Hand-charged sprayers will only be allowed if a thin uniform coating of release agent is obtained on the form liner.

9. Remove the form liner from the wall within 24 hours of pouring the concrete. The form liners may be detached from the forms and then removed from the concrete, or they may remain attached to the forms and the entire forming system removed from the concrete.

Remove the form liners from the top, down. Curing of concrete may be accomplished with form liners and forms placed back against the wall after the initial detachment. Other means of curing can also be used including curing blankets and/or plastic. Curing compounds shall not be used.

10. Care and Cleaning of Form Liner: Form liners shall be cleaned the same day they are removed from the wall with a power wash and mild detergent. Synthetic brushes with stiff bristles may be used on stubborn areas. Mild acid washes may also be used. Solvents shall not be used. If necessary, patching of holes shall be performed with 100% clear silicone caulk. Form liners shall be stored inside or under a protective, non-transparent cover, in a vertical, upside-down position.

11. Wall Patching and Preparation: After form liners are removed from the hardened concrete, the textured uncolored surface shall be prepared for color staining. All holes larger then 3/4" in greatest principal dimension shall be filled with concrete patching material such as Tamm's Speed-Crete or equal mixed with latex or acrylic bonder, as approved by the manufacturer and Engineer. All honeycombed areas shall be filled and textured to match surrounding areas. Seam lines and other unnatural protrusions shall be ground down to match adjacent areas with a hand-held power grinder using discs made for concrete. Grinding of seams shall be performed immediately after removal of the form liners. Perform final bush hammering to blend defects and ground areas into the final rock texture. In particular, the process of wall patching and preparation shall be subject to approval of the manufacturer and Engineer.

12. Color Staining (by manufacturer): The hardened concrete shall be a minimum of 30 days old before color staining is applied. Power wash the wall to free it from laitance, dirt, oil and other objectionable materials. After the wall has dried, the color staining process is applied using colors approved by the Engineer. Color staining shall be applied in such a way that the stones shall have individual colorations from adjacent stones. Water-based stains shall be used in air temperatures between 50 degrees F and 100 degrees F. Solvent-based stains shall be used in air temperatures of 50 degrees F and below, but in no case when the temperature of the hardened concrete is 40 degrees and falling. During color staining operations the Contractor shall protect property, pedestrians, vehicular and other traffic in the vicinity of the wall against damage or disfigurement from errant stain materials. Comply with all environmental regulations regarding surface cleaning, stain application, ground and watercourse protection and disposal protection of waste materials. Refer to Section 1.10 of the Standard Specifications (Form 816).

13. Simulated Stone Molds Preparation: Clean and make free of buildup prior to each pour. Inspect for blemishes and tears. Repair if needed following manufacturer's recommendations.

Method of Measurement:

This work shall be measured for payment by the actual number of square yards of the face area of accepted architectural form liner, poured in place simulated stone masonry, completed within the neat lines as shown on the plans, or as ordered by the Engineer.

Basis of Payment:

This Work will be paid for at the contract unit price per square yard for "Simulated Stone Masonry", complete in place, which price shall include all equipment, formwork molds, test panels, and all other tools and labor incidental thereto.

This work shall also include the cost of furnishing and application of the color stain system to the simulated stone masonry surface.

Pay Item	Pay Unit
Simulated Stone Masonry	s.y.

ITEM #0601109A - PRECAST CONCRETE WALLS

Description: Work under this item shall consist of furnishing and installing precast reinforced concrete retaining walls, consisting of wingwall stems and footings, headwalls and cutoff walls at inlet and outlet culvert units, in accordance with the details shown on the plans, in accordance with these specifications and as ordered by the Engineer.

Work under this item shall also include the following:

- Grouted splice sleeves embedded in wingwall footings
- Waterproofing of wall stem joints by means of peel and stick rubber membranes and closed cell expandable foam
- Silicone joint sealant between the concrete sidewalk and the headwall
- Lubricated concrete skids or an equivalent system for sliding the precast concrete elements into final position.
- Non-shrink grout to be used at locations shown on the plans.

Materials: The concrete shall conform to the requirements of Subarticle M.14.01-1, as applicable. The concrete shall have a minimum 28 day compressive strength, f'_c, of 5,000 psi.

The reinforcement shall be deformed steel bars. The deformed steel bars shall be uncoated and conform to the requirements of ASTM A615, Grade 60.

The grout sleeve system shall consist of a steel sleeve filled with non-shrink, high-early-strength grout that is capable of developing at least 125% of the yield strength, F_y, of the splicing reinforcing bars. The grout used in the sleeve shall achieve a compressive strength of minimum 4,000 psi prior to backfilling. One product that meets these requirements is NMB Splice-Sleeve ® System produced by Splice Sleeve North America, Inc. Similar products will be considered for use after submission for review to the Engineer.

All threaded concrete inserts, lifting fixtures and miscellaneous hardware cast into precast concrete components shall be galvanized in accordance with ASTM A153 or ASTM B695, Grade 50, or be stainless steel.

Waterproof Membrane: Shall be a peel and stick rubber membrane, minimum 1/8" thick, manufactured for the express purpose of preventing water infiltration through vertical joints in concrete structures. One material that meets this requirement is MiraDRI 1860 and APW primer, manufactured by Carlisle Products, Inc. Similar products will be considered for use after submission for review to the Engineer.

Closed cell expandable foam shall be a commercially available material that is made for filling in gaps and voids, as recommended by the Contractor, subject to approval by the Engineer.

Silicone joint sealant shall conform to the requirements of Article M.03.08 – Joint Materials.

Precast concrete skids with lubricant or equivalent sliding system shall be of a quality satisfactory to the Engineer.

Non-shrink grout shall conform to the requirements of Article M.03.05 – Non Shrink, Non Staining Grout.

Construction Methods:

1. Shop Drawings: Prior to fabrication, the Contractor shall submit shop drawings to the Engineer for review in accordance with Article 1.05.02.No substitution of wall design shall be permitted.

2. Erection Working Drawings, Design Computations: Prior to fabrication, the Contractor shall submit working drawings and design computations for the lifting hardware to the Engineer for review in accordance with Article 1.05.02. An individual, independently packaged set of working drawings and computations, with all details and documents necessary for fabrication and erection, shall be prepared and submitted for the hardware on **each** wall section. The working drawings and computations shall be prepared in Customary U.S. units.

The packaged set of working drawings and computations shall be submitted either in paper (hard copy) form or in an electronic portable document format (.pdf).

The working drawings and design computations shall be **signed, dated and sealed** by a Professional Engineer licensed in the State of Connecticut, who shall also be available for consultation in interpreting their computations and drawings, and in the resolution of any problems which may occur during the performance of the work. Each working drawing shall be signed, dated and sealed. The cover/first sheet for the computations shall be signed, dated and sealed.

The working drawings for erection shall include, but not be limited to the following:

- Type, size and location of lifting holes and seating fixtures. All fixtures (inserts, etc.) cast permanently into the sections shall be recessed a minimum of ¾". No more than four lifting holes or fixtures shall be located in each wall section.

- Material specifications/designations for all components

- Location and size of crane(s), features that limit the crane's operation such as overhead utilities or difficult terrain and extended reach. Crane charts shall be submitted with proposed equipment.

- Sequence of installation

- Installation manual

- Details of the method used to seat the sections together
- Lifting weights

The design computations shall include, but not be limited to the following:

- Project number, town and crossing
- References to design specifications, including interim specifications
- Diagrams identifying all members and load conditions.
- Computations for all construction load effects that may be applied during construction.

The Contractor shall submit the packaged set of working drawings and calculations to the "Engineer of Record". The "Engineer of Record" is identified in the signature block on the structural contract plans. A copy of the transmittal shall be sent to the District Construction office administering the project.

The reviewed and stamped working drawings and calculations shall be sent by the reviewer, along with a recommendation regarding acceptance, to the District Construction office for review, comment and distribution.

3. Fabrication and Manufacture: The fabrication and manufacture of the walls shall conform to the latest edition of the AASHTO LRFD Bridge Design Specifications, including the latest interim specifications, as supplemented by the following:

3-1. Forms and Forming Material: Forms shall be mortar-tight and sufficiently strong to prevent misalignment of adjacent precast sections. Forms shall be constructed to allow their removal without damage to the concrete. A positive means of supporting reinforcing cages in place during forming shall be required.

The forms shall not be removed until the concrete is sufficiently strong to avoid possible damage to the concrete. Forms shall not be removed without approval being granted by the Engineer. Damage to the concrete due to early removal of the forms shall be cause for rejection.

All forming materials used for casting cylindrical openings for lifting holes or holes for grouting deformed steel bars shall be removed. All non-plastic material used as forms for casting weepholes shall also be removed.

3-2. Concrete Mix: The Contractor shall design and submit to the Engineer for review a concrete mix that shall attain a minimum 28 day compressive strength,

f'_c, of 5,000 psi. Hycrete X1002 manufactured by Hycrete Inc. shall be added to the concrete mix in strict accordance with the manufacturer's specification.

3-3. Reinforcement Steel: Shall be subject to the provisions of Articles 6.02.03-2 through 6.02.03-8. The welding of reinforcement, unless specifically indicated in the Plans, shall not be permitted.

3-4. Placing Concrete: Concrete shall not be deposited in the forms until the Engineer has verified the presence and proper location of the reinforcing steel, the couplers, and other components, and has given his approval thereof.

Concrete shall not be deposited into the forms when the ambient temperature is below 40° F or above 100° F, unless adequate heating or cooling procedures are provided and have been previously approved by the Engineer. The concrete temperature shall be within the range of 60° F to 90° F at the time of placement.

Production during the winter season, from November 15 to March 15 inclusive, will be permitted only in a completely enclosed structure of suitable size and dimension that provides a controlled atmosphere for the protection of both the casting operation and the product.

Outside concreting operations will not be permitted during rainfall unless the operation is completely under cover.

The concrete shall be vibrated internally, or externally, or both, as ordered by the Engineer. The vibrating shall be done with care in such a manner as to avoid displacement of reinforcing steel, forms, or other components. There shall be no interruption in the pouring of any of the members. Concrete shall be carefully placed in the forms and sufficiently vibrated to produce a surface that is free from imperfections such as honeycombing, segregation, cracking, or checking. Any deficiencies noted in the members may be cause for rejection.

3-5. Test Cylinders:

During the casting of the wall and footing sections, the Contractor shall make test cylinders under the supervision of a representative of the Department. A minimum of 4 cylinders shall be taken during each production run or as ordered by the Engineer. The dimensions and type of cylinder mold shall be as specified by the Engineer. Cylinders shall be cured under the requirements of ASTM C31 and shall be used to determine the 28 day compressive strength requirements ($f'c$). The Engineer also reserves the right to request and test core specimens from the sections to determine their adequacy.

3-6. Finishing: All fins, runs, or mortar shall be removed from the concrete surfaces which will remain exposed. Form marks on exposed surfaces shall be

smoothed by grinding. All exposed, outside concrete surfaces shall be given a grout clean-down finish in accordance with Subarticle 6.01.03-21.

3-7. Handling and Storage: Care shall be taken during storage, transporting, hoisting and handling of all pieces to prevent damage. Sections damaged by improper storing, transporting or handling shall be repaired or replaced by the Contractor, as directed by the Engineer and at no cost to the Department. All storage and handling operations shall be as directed by the Engineer.

The wall and footing sections shall not be shipped to the job site until the 28 day strength (f'_c) has been attained.

3-8. Repairs: The Engineer shall evaluate the acceptability and the cause of the defects and the service condition of the wall and footing section. No repairs shall be done by the Contractor unless permission has been granted by the Engineer. The Contractor shall submit to the Engineer, for review, the proposed methods and materials to be used in the repair operation. All repairs shall be sound and properly finished and cured before the wall and footing section is delivered to the job site. The Contractor shall bear the costs of all repair work.

3-9. Working Lines: One common working line shall be used for all transverse and longitudinal measurements.

3-10. Fabrication Tolerances: The length of each wall panel measured along its longitudinal axes shall be equal to that shown on the plans plus or minus ¼". The thickness of each wall panel shall be equal to that shown on the plans plus or minus ¼". The height of each wall panel, measured from the top of the footing to the top of the wall, shall be equal to that shown on the plans plus or minus ¼".

3-11. Erection Tolerances: The top of wall elevation shall be equal to that shown on the plans plus or minus ¼". The end squareness, dimension "A" in the elevation below, shall not exceed plus or minus ⅛". Dimension "B", as shown in the section below, shall not exceed plus or minus ¼" for every 10' of wall height.

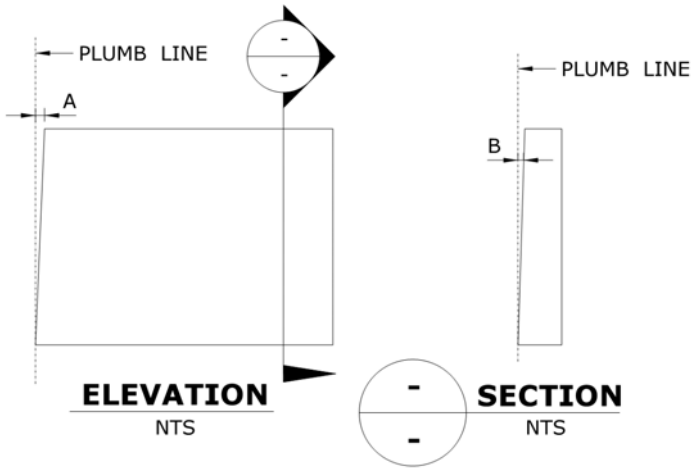

3-12. Shop-fitting: Precast concrete wall and footing sections shall be dry fit at the casting yard prior to shipment of the precast concrete sections.

4. Installation: The installation of the precast concrete retaining walls shall conform to the following requirements:

The installation of the precast concrete retaining wall sections shall proceed as required by the sequence of construction, stage construction plans, and the special provisions entitled "Prosecution and Progress" and "Maintenance and Protection of Traffic."

The footings shall be set to the line and grade indicated on the plans or as directed by the Engineer. Placement of the footings shall not start until the Engineer has approved the depth of excavation and the suitability of the foundation material.

5. Closed cell expandable foam: Shall be injected into the vertical gaps between precast components. It shall also be injected into the gaps between the cut-off walls and the footings where ordered by the Engineer, paying special attention to the gaps between the cut-off wall and the footings. The material shall be allowed to cure, then trimmed to avoid any conflict between the foam and the rubber membrane. Installation procedures shall conform to the Manufacturer's instructions.

6. Rubber Membrane at Wall Joints: Shall be installed in accordance with the Manufacturer's written instructions including application of primer.

Method of Measurement: This work will not be measured for payment.

Basis of Payment: This work will be paid for at the contract lump sum price for "Precast Concrete Walls", of the dimensions indicated, complete in place, which price shall include all

equipment, materials, tools and labor incidental to the manufacture and installation of the precast concrete walls with positive shear transfer device in footings at the locations specified on the plans.

Pay Item	Pay Unit
Precast Concrete Walls	l.s.

ITEM #0601464A - 18’ X 6’-6” PRECAST CONCRETE BOX CULVERT

Description: Work under this item shall consist of designing, furnishing and installing a precast concrete box culvert, constructed of four sided, reinforced, monolithically precast concrete sections with open ends, in accordance with the details shown on the plans, in accordance with these specifications and as ordered by the Engineer. The inlet and outlet culvert units shall be furnished with embedded grout sleeves in accordance with the plans.

Work under this item shall also include the use of non-shrink grout at locations shown on the plans and in accordance with these specifications; and lubricated concrete skids for sliding the precast concrete elements into final position.

Materials: The concrete shall conform to the requirements of Subarticle M.14.01-1, as applicable, except when zero-slump concrete is used the entrained air content requirement is eliminated. The concrete shall have a minimum 28 day compressive strength, f'_c, of 5,000 psi.

The reinforcement shall be either welded wire fabric or deformed steel bars. The welded wire fabric shall be uncoated and conform to the requirements of ASTM A185 or ASTM A497. The deformed steel bars shall be uncoated and conform to the requirements of ASTM A615, Grade 60.

The grout sleeve system shall consist of a steel sleeve filled with non-shrink, high-early-strength grout that is capable of developing at least 125% of the yield strength, F_y, of the splicing reinforcing bars. The grout used in the sleeve shall achieve a compressive strength of minimum 4,000 psi prior to backfilling. One product that meets these requirements is NMB Splice-Sleeve ® System produced by Splice Sleeve North America, Inc. Similar products will be considered for use after submission for review to the Engineer.

Mechanical reinforcing bar connectors shall be dowel bar mechanical connectors conforming to Article M.06.01 – Reinforcing Steel.

All threaded concrete inserts, lifting fixtures and miscellaneous hardware cast into precast concrete components shall be galvanized in accordance with ASTM A153 or ASTM B695, Grade 50, or be stainless steel.

Gaskets shall be flexible, expanded rubber conforming to ASTM D1056.

Non-shrink grout other than the splice-sleeve grout shall conform to the requirement of Article M.03.05 – Non Shrink, Non Staining Grout, except that the non-shrink grout shall attain a minimum compressive strength of 3000 psi prior to allowing the passage of water over the grout.

Precast concrete skids and lubricant shall be of a quality satisfactory to the Engineer.

Construction Methods:

1. Design and Load Rating: The design of the precast concrete box culvert shall conform to the requirements of the latest edition of the AASHTO LRFD Bridge Design Specifications, including the latest interim specifications, as supplemented by ASTM C1577 and amended as follows:

- In addition to the HL-93 design live load, the precast concrete box culvert shall be designed to carry the legal and permit live loads shown in Figure 1.

- The precast concrete box culvert shall be designed for all construction load effects that may be applied during all stages/phases of construction.

- The precast concrete box culvert shall be designed for the load effects resulting from all current and future finished grading conditions shown on the plans.

- The precast concrete box culvert shall be designed to have an adequate stiffness to limit the deflection, due to the design live load, to no greater than 1/800 of the span (clear distance between the inside face of walls).

- The minimum side wall length of any box culvert section (skewed or straight) shall be 4’-0”.

- The reinforcement in box culvert sections skewed greater than 15° shall be deformed steel bars. The use of welded wire fabric in these skewed sections is not permitted. Bar reinforcement in the roof and floor of skewed end of these box culvert sections shall be placed parallel to the skewed end and splayed/fanned along the section until it is oriented normal to the centerline of the section.

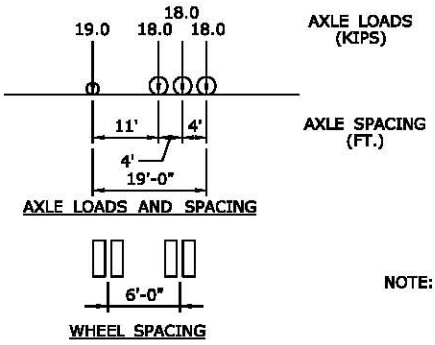

NOTE: CT- L73.0 REPRESENTS THE CONSTRUCTION VEHICLE DESCRIBED IN SECTION 14-269(d) OF THE CT GENERAL STATUTES

CT-L73.0 LEGAL LIVE LOAD VEHICLE

73 KIPS ON 4 AXLES

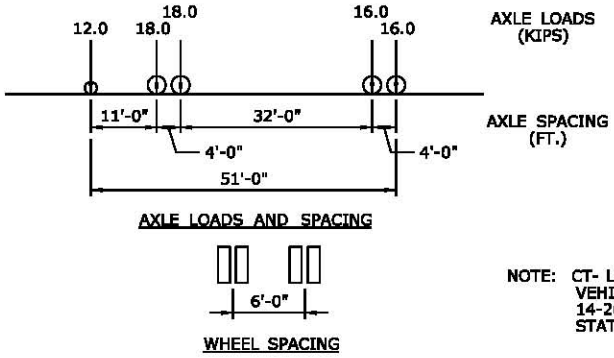

NOTE: CT- L3S2 REPRESENTS THE VEHICLE DESCRIBED IN SECTION 14-267A(b)(8) OF THE CT GENERAL STATUTES

CT-L3S2 LEGAL LIVE LOAD VEHICLE

80 KIPS ON 5 AXLES

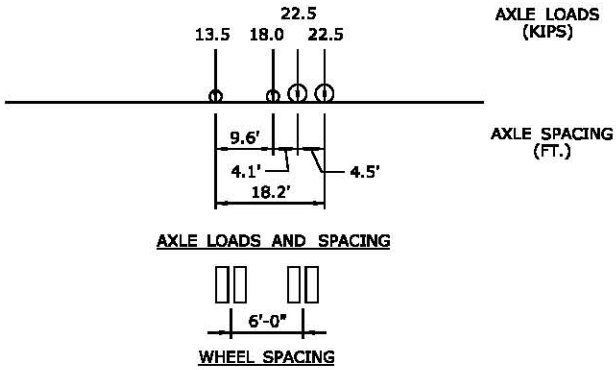

CT-P76.5 PERMIT LIVE LOAD VEHICLE

76.5 KIPS ON 4 AXLES

FIGURE 1

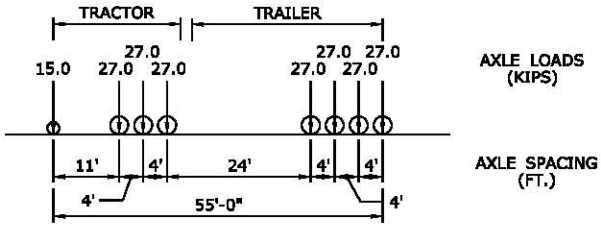

AXLE LOADS AND SPACING

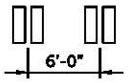

WHEEL SPACING

NOTE: CT-P204 IS A NOTIONAL VEHICLE

CT-P204 PERMIT LIVE LOAD VEHICLE

204 KIPS ON 8 AXLES

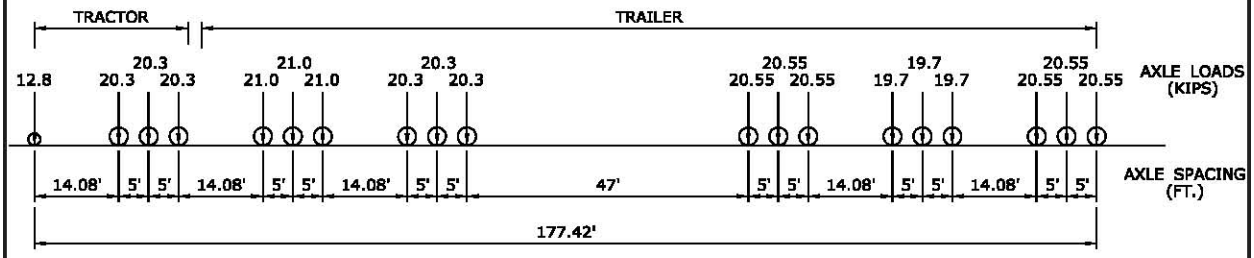

AXLE LOADS AND SPACING

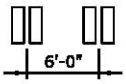

WHEEL SPACING

CT-P380 PERMIT LIVE LOAD VEHICLE

380 KIPS ON 19 AXLES

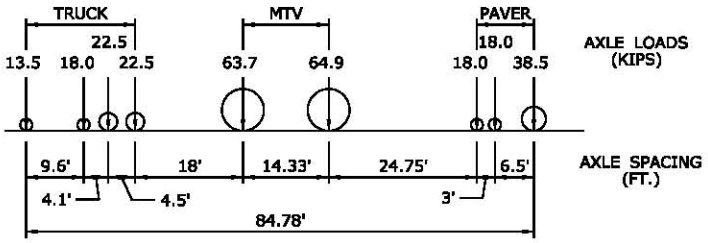

AXLE LOADS AND SPACING

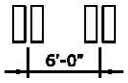

WHEEL SPACING

NOTE: TLC = TRI-LOAD COMBINATION OF VEHICLES IN PAVING TRAIN

CT-TLC PERMIT LIVE LOAD VEHICLE

279.6 KIPS ON 9 AXLES

FIGURE 1

Design, legal and permit vehicle live load ratings shall be prepared for each box culvert.

The live load ratings shall be prepared and submitted in accordance with the Chapter 7 of the Department's Bridge Inspection Manual amended as follows:

- Live load ratings shall be computed in accordance with the load and resistance factor rating (LRFR) method described in the AASHTO Manual for Bridge Evaluation (AASHTO MBE).

- In the event of conflict between live load rating requirements and procedures outlined in the Bridge Inspection Manual with those of the AASHTO MBE, the AASHTO MBE shall govern.

Live load ratings for each box culvert shall be prepared in accordance with the requirements of AASHTO MBE Table 6A.4.2.2-1 for all limit states, including all optional checks.

For strength I and II limit states, the live load ratings shall be prepared for the live loads, the load factor criteria and analysis parameters shown in Table 1.4.4-1. The average daily truck traffic (ADTT), in one direction, used to determine load factors shall be greater than 5000. The value of the condition factor used in the rating analysis shall be 1.00. The value of the system factor used in flexural, axial and shear rating analysis shall be 1.00. The dynamic load allowance shall conform to the AASHTO MBE. The minimum acceptable rating factors shall be no less than the values shown in Table 1.4.4-1.

For service I limit states, the live load ratings shall be prepared for the live loads, the load factor criteria and analysis parameters shown in Table 1.4.4-2. The live load distribution and dynamic load allowance shall conform to the AASHTO MBE, unless noted otherwise. The minimum acceptable rating factors shall be no less than the values shown in Table 1.4.4-2.

Table 1.4.4-1 - Strength Limit States

Rating Procedure	Live Load Vehicle	Load factor criteria and analysis parameters	Minimum Acceptable Rating Factor (RF)
Design Load Rating	HL-93	Evaluation Level – inventory	1.00
Design Load Rating	HL-93	Evaluation Level – operating	Report value
Legal Load Rating	CT-L73.0	Load Factor: use AASHTO MBE Table 6A.4.5.4.2a-1 Permit Type: Routine or Annual Frequency: Unlimited Crossings Loading Condition: Mix with traffic Distribution Factor: Two or more lanes	1.00
Legal Load Rating	CT-L3S2	Load Factor: use AASHTO MBE Table 6A.4.5.4.2a-1 Permit Type: Routine or Annual Frequency: Unlimited Crossings Loading Condition: Mix with traffic Distribution Factor: Two or more lanes	1.00
Permit Load Rating	CT-P76.5	Load Factor: use AASHTO MBE Table 6A.4.5.4.2a-1 Permit Type: Routine or Annual Frequency: Unlimited Crossings Loading Condition: Mix with traffic Distribution Factor: Two or more lanes	1.00
Permit Load Rating	CT-P204	Load Factor: use AASHTO MBE Table 6A.4.5.4.2a-1 Permit Type: Routine or Annual Frequency: Unlimited Crossings Loading Condition: Mix with traffic Distribution Factor: Two or more lanes	1.00
Permit Load Rating	CT-P380	Load Factor: use AASHTO MBE Table 6A.4.5.4.2a-1 Permit Type: Special or Limited Crossing Frequency: Single Trip Loading Condition: Escorted with no other vehicles on the bridge Distribution Factor: One lane ADTT: N/A	1.00
Permit Load Rating	CT-TLC	Load Factor: use AASHTO MBE Table 6A.4.5.4.2a-1 Permit Type: Special or Limited Crossing Frequency: Single trip Loading Condition: Mix with traffic Distribution Factor: One lane Dynamic Load Allowance: 0.00	1.00

Table 1.4.4-2 - Service Limit States

Rating Procedure	Live Load Vehicle	Load factor criteria and analysis parameters	Minimum Acceptable Rating Factor (RF)
Design Load Rating	HL-93	Evaluation Level – inventory Load Factor: use AASHTO MBE Table 6A.4.2.2.1	1.00
Design Load Rating	HL-93	Evaluation Level – operating Load Factor: use AASHTO MBE Table 6A.4.2.2.1	Report value
Legal Load Rating	CT-L73.0	Load Factor: use AASHTO MBE Table 6A.4.2.2.1	1.00
Legal Load Rating	CT-L3S2	Load Factor: use AASHTO MBE Table 6A.4.2.2.1	1.00
Permit Load Rating	CT-P76.5	Load Factor: use AASHTO MBE Table 6A.4.2.2.1	1.00
Permit Load Rating	CT-P204	Load Factor: use AASHTO MBE Table 6A.4.2.2.1	1.00
Permit Load Rating	CT-P380	Load Factor: use AASHTO MBE Table 6A.4.2.2.1 Distribution Factor: One lane	1.00
Permit Load Rating	CT-TLC	Load Factor: use AASHTO MBE Table 6A.4.2.2.1 Distribution Factor: One lane Dynamic Load Allowance: 0.00	1.00

All software use to compute the live load ratings shall be pre-approved by the Department. The live load rating may be computed using the latest versions of the following software:

- AASHTOWare Bridge Rating (formerly known as Virtis)
- STAAD
- MathCad
- Excel
- CANDE-2007
- BXLRFD

CANDE-2007 and BXLRFD are stand alone software programs.

CANDE-2007 is a Culvert Analysis and Design program developed under NCHRP Project 15-28. CANDE-2007 is available for no cost. Additional information about this program can be found on the internet at the following address:

http://144.171.11.40/cmsfeed/TRBNetProjectDisplay.asp?ProjectID=408

BXLRFD is a LRFD Box Culvert Design and Rating program developed by the Pennsylvania Department of Transportation (PennDOT). Additional information about this program can be found on the internet at the following address:

http://penndot.engrprograms.com/home/

All design and analysis with CANDE-2007 shall be performed using Solution Level 2, an automated finite element solution.

The Contractor shall communicate with the Department early in the culvert design process to avoid any delay in the review time. Different design options may be presented for the Department's early evaluation and approval.

2. Working Drawings, Design Computations and Load Rating Submittals: Prior to fabrication, the Contractor shall submit working drawings and design computations for each box culvert to the Engineer for review in accordance with Article 1.05.02. An individual, independently packaged set of working drawings and computations, with all details and documents necessary for fabrication and erection, including a copy of the certificate of insurance, shall be prepared and submitted for **each** box culvert. The working drawings and computations shall be prepared in Customary U.S. units.

The packaged set of working drawings and computations for each box culvert shall be submitted either in paper (hard copy) form or in an electronic portable document format (.pdf) with appropriate bookmarks. The packaged set submitted in paper form shall be bound with a staple. The packaged set submitted in an electronic portable document format (.pdf) shall be in an individual file. The packaged set shall include the following:

- title sheet
- table of contents
- contact information for designer and fabricator – contact information should include name and address of each firm and the name of contact person with phone number and email address
- copy of the certificate of insurance
- box culvert working drawings
- box culvert design computations and supporting data

The working drawings and design computations shall be **signed, dated and sealed** by a Professional Engineer licensed in the State of Connecticut, who shall also be available for consultation in interpreting their computations and drawings, and in the resolution of any

problems which may occur during the performance of the work. Each working drawing shall be signed, dated and sealed. The cover/first sheet for the computations shall be signed, dated and sealed.

Working drawings submitted in paper form shall be printed on ANSI B (11” x 17”; Ledger/Tabloid) sheets. Each drawing shall have a border and title block. Located in the lower right hand corner of the drawing adjacent to the title block, each drawing shall have a rectangular box, 2 ¼” wide x 1 ¾” high, for the reviewers stamp. On the ANSI B sheets, the minimum text height and width shall be 1/16”. All letter characters shall be uppercase. Design computations, procedures and other supporting data shall be submitted on 8 ½" x 11" (Letter) sheets.

Working drawings submitted in an electronic portable document format (.pdf) shall be created on ANSI D (22” x 34”) full scale (1” electronic file = 1” paper) sheets. (The purpose of creating the drawings on ANSI D sheets is so that the sheets may be printed/plotted at that size or smaller without loss of legibility.) Each drawing shall have a border and title block. Located in the lower right hand corner of the drawing adjacent to the title block, each drawing shall have a rectangular box, 2 ¼” wide x 1 ¾” high, for the reviewers stamp. On the ANSI D full scale sheets, the minimum text height and width shall be 1/8”. All letter characters shall be uppercase. The electronic files for the design computations, procedures and other supporting data shall be created on ANSI A (8 ½” x 11”) letter sheets.

The working drawings shall include complete details of the precast concrete box culvert. The drawings shall include, but not be limited to the following:

- Project number, town and crossing

- Layout plan of the precast box culvert. The plan shall include the dimensions of each box culvert section. The length of each box culvert section shall be determined by the Contractor and shall satisfy the stages of construction, sequence of construction, and construction methodology shown on the plans. When installed, the combined length of the box culvert sections shall equal the total length of the box culvert shown on the plans.

- Plans and cross-sections of the box culvert sections detailing the length, width, height and thickness of walls and slabs

- Type, size, location and spacing of steel reinforcing, mechanical connectors and concrete inserts for anchoring threaded deformed steel bars. Provide bending diagrams, material lists and catalog cuts for mechanical connectors and inserts as applicable.

- Type, size and location of lifting holes and seating fixtures. All fixtures (inserts, etc.) cast permanently into the sections shall be recessed a minimum of ¾”. No more than four lifting holes or fixtures shall be located in each box section.

- Location and size of all holes cast for grouting deformed steel bars or other reasons as noted on the plans

- Complete details of the lap joints at the end of the box sections, which shall include the type, size and location of gaskets and additional steel reinforcement. Except where shown otherwise, the ends of the box sections shall have lap joints with not less than 1½" of concrete overlap. Each joint shall be provided with a preplaced gasket.

- Material specifications/designations for all components

The design computations and load ratings shall include, but not be limited to the following:

- Project number, town and crossing

- References to design specifications, including interim specifications

- Diagrams identifying all members and load conditions and combinations

- Descriptions for each notation used, and references to applicable specification sections and articles

- Bending moment and shear diagrams

- Section specific computations for box culvert sections skewed greater than 15°

- Computations for reinforcing development lengths and diagrams indentifying splice locations

- Complete tabulated results from **all** load conditions and load combinations.

- Electronic copies of STAAD, CANDE-2007, or BXLRFD input files

- Electronic unprotected copies of MathCad and Excel files

- Results of live load ratings tabulated on a summary sheet for each box culvert

The Contractor shall submit the packaged set of working drawings and calculations to the "Engineer of Record". The "Engineer of Record" is identified in the signature block on the structural contract plans. A copy of the transmittal shall be sent to the District Construction office administering the project.

The reviewed and stamped working drawings and calculations shall be sent by the reviewer, along with a recommendation regarding acceptance, to the District Construction office for

review, comment and distribution. After the District Construction office has reviewed the working drawings and calculations, ensured all comments have been addressed and have found the submittal to be acceptable, in addition to distributing copies of the working drawings and calculations to the Contractor and District offices, a copy of each packaged set of working drawings and calculations shall be sent to the following:

Bridge Safety and Evaluation
Research and Materials
Engineer of Record

3. Fabrication and Manufacture: The fabrication and manufacture of the precast concrete box culvert shall conform to the latest edition of the AASHTO LRFD Bridge Design Specifications, including the latest interim specifications, as supplemented by ASTM C1577 and the following:

3-1. Forms and Forming Material: Forms shall be mortar-tight and sufficiently strong to prevent misalignment of adjacent precast sections. Forms shall be constructed to allow their removal without damage to the concrete. A positive means of supporting reinforcing cages in place during forming shall be required.

The forms shall not be removed until the concrete is sufficiently strong to avoid possible damage to the concrete. Forms shall not be removed without approval being granted by the Engineer. Damage to the concrete due to early removal of the forms shall be cause for rejection.

All forming materials used for casting cylindrical openings for lifting holes or holes for grouting deformed steel bars shall be removed. All non-plastic material used as forms for casting weepholes shall also be removed.

3-2. Concrete Mix: The Contractor shall design and submit to the Engineer for review a concrete mix that shall attain a minimum 28 day compressive strength, f'_c, of 5,000 psi.

3-3. Reinforcement Steel: Shall be subject to the provisions of Articles 6.02.03-2 through 6.02.03-8. The welding of reinforcement, unless specifically indicated in the Plans, shall not be permitted.

3-4. Placing Concrete: Concrete shall not be deposited in the forms until the Engineer has verified the presence and proper location of the reinforcing steel and other components, and has given his approval thereof.

Concrete shall not be deposited into the forms when the ambient temperature is below 40° F or above 100° F, unless adequate heating or cooling procedures are provided and have been previously approved by the Engineer. The concrete temperature shall be within the range of 60° F to 90° F at the time of placement.

Production during the winter season, from November 15 to March 15 inclusive, will be permitted only in a completely enclosed structure of suitable size and dimension that provides a controlled atmosphere for the protection of both the casting operation and the product.

Outside concreting operations will not be permitted during rainfall unless the operation is completely under cover.

Void forms shall be held in place against uplift or lateral displacement during the pouring and vibrating of the concrete by substantial wire ties or other satisfactory means as approved by the Engineer.

The concrete shall be vibrated internally, or externally, or both, as ordered by the Engineer. The vibrating shall be done with care in such a manner as to avoid displacement of reinforcing steel, voids, forms, or other components. There shall be no interruption in the pouring of any of the sections. Concrete shall be carefully placed in the forms and sufficiently vibrated to produce a surface that is free from imperfections such as honeycombing, segregation, cracking, or checking. Any deficiencies noted in the sections may be cause for rejection.

3-5. Test Cylinders: During the casting of the sections, the Contractor shall make test cylinders under the supervision of a representative of the Department. A minimum of 4 cylinders shall be taken during each production run or as ordered by the Engineer. The dimensions and type of cylinder mold shall be as specified by the Engineer. Cylinders shall be cured under the requirements of ASTM C31 and shall be used to determine the 28 day compressive strength requirements (f′c). The Engineer also reserves the right to request and test core specimens from the sections to determine their adequacy.

3-6. Finishing: All fins, runs, or mortar shall be removed from the concrete surfaces which will remain exposed. Form marks on exposed surfaces shall be smoothed by grinding. All exposed, outside concrete surfaces shall be given a grout clean-down finish in accordance with Subarticle 6.01.03-21.

3-7. Handling and Storage: Care shall be taken during storage, transporting, hoisting and handling of all box sections to prevent damage. Sections damaged by improper storing, transporting or handling shall be repaired or replaced by the Contractor, as directed by the Engineer and at no cost to the Department. All storage and handling operations shall be as directed by the Engineer. The box sections shall not be shipped to the job site until the 28 day strength (f'_c) has been attained.

3-8. Repairs: The Engineer shall evaluate the acceptability and the cause of the defects and the service condition of the box section. No repairs shall be done by the Contractor unless permission has been granted by the Engineer. The

Contractor shall submit to the Engineer, for review, the proposed methods and materials to be used in the repair operation. All repairs shall be sound and properly finished and cured before the box section is delivered to the job site. The Contractor shall bear the costs of all repair work.

3-9. Shop-fitting: Inlet and outlet end culvert units that have grout sleeves shall be dry fit to the respective precast headwall sections at the casting yard prior to shipment of the culvert sections.

4. Installation: The installation of the precast concrete box culvert shall conform to the following requirements:

The installation of the precast concrete box culvert sections shall proceed as required by the sequence of construction, stage construction plans, and the special provisions entitled "Prosecution and Progress" and "Maintenance and Protection of Traffic."

The box sections shall be placed in a manner to best accommodate and facilitate the construction or installation of all adjacent structures including cut-off walls and wingwalls. No box sections shall be set on cast-in-place concrete without the approval of the Engineer.

The box sections shall be set to the line and grade indicated on the plans or as directed by the Engineer. Placement of the sections shall not start until the Engineer has approved the depth of excavation and the suitability of the foundation material.

The lap joints shall be securely seated together to achieve a silt-tight joint all around. A silt-tight joint is defined as a joint in which the gasket is compressed to a minimum of one half of its uncompressed width. The gasket shall be uniformly compressed along all vertical and horizontal surfaces. A positive means, through the use of seating devices, shall be used for pulling one section against another to assure an adequate silt-tight joint.

Details for the seating method shall be submitted to the Engineer for review. The lap joints shall be seated such that they make a continuous line of sections with a smooth interior free from irregularities in the invert line.

The top portions of the horizontal lap joints for the roof and floor slabs and the outside face of the vertical lap joints (full height on each side) shall be neatly filled with non-shrink grout after seating the sections. The exposed portions of the lap joints within the haunches or fillets shall also be neatly filled with non-shrink grout. The finished surface shall be smooth and level with the adjacent concrete.

The box sections for multiple barrel culverts shall be placed as detailed on the plans. Slight mismatches along the 1” longitudinal joint may be tolerated by the Engineer provided that the vertical difference between the top surfaces of adjacent sections is 1” or less. The top 2” of the longitudinal joint shall be filled flush with non-shrink grout. The top surface of the non-shrink grout shall be sloped to form a smooth transition to correct any allowable mismatches.

Geotextile shall be placed over all vertical joints. Geotextile shall also be placed over the roof joints of culverts not receiving woven glass fabric. The geotextile shall extend 6” to each side of the joint and be attached to the culvert using silicone caulk.

After its installation, any box section or joint that is, as determined by the Engineer, not acceptable in vertical or horizontal alignment for any reason, including but not limited to settlement, displacement, excess camber or misfit, shall be removed by the Contractor and correctly installed, as directed by the Engineer and at no additional cost to the State.

All fixtures or holes cast into the sections for lifting or seating shall be neatly filled with non-shrink grout. The finished surface shall be smooth and level with the adjacent concrete. The surface preparation, mixing, placing, curing, and finishing of the non-shrink grout shall conform to the written instructions provided by the manufacturer of the grout. The Contractor shall furnish the Engineer with copies of the instructions. The grout shall be cured at least 1 day unless determined otherwise by the Engineer.

Method of Measurement: This work will be measured for payment by the number of linear feet of precast concrete box culvert, of the size indicated, completed and accepted, measured in place along the floor at the centerline of culvert from the inlet to the outlet of the culvert.

Basis of Payment: This work will be paid for at the contract unit price per linear foot for "18’ x 6’-6” Precast Concrete Box Culvert", of the size indicated, complete in place, which price shall include all equipment, materials, tools and labor incidental to the design, manufacture and installation of the precast concrete box culvert at the locations specified on the plans.

Pay Item	Pay Unit
18’ X 6’-6” Precast Concrete Box Culvert	e.a.

ITEM #0602910A - DRILLING HOLES AND GROUTING DOWELS

Description: Work under this item consists of drilling holes in concrete and grouting dowels as shown on the plans, in accordance with the manufacturer's recommendations, and as directed by the Engineer. For the purpose of this specification, a dowel is defined as a reinforcing bar.

Materials: The chemical anchoring material shall conform to Article M.03.07 – Chemical Anchors.

Construction Methods: Before fabricating any materials, the Contractor shall submit manufacturer's specifications and installation instructions for the chemical anchoring material to the Engineer for review in accordance with Article 1.05.02. This shall include, but not limited to, the type of drill, diameter of bit, method of cleaning holes and method of placement of the adhesive bonding material. The weight of the drill shall not exceed 15 pounds.

Holes for the dowels shall be located as shown on the plans. The holes shall clear the existing reinforcement and provide the minimum cover as shown on the plans. A pachometer shall be used to locate existing reinforcing steel. If existing reinforcing is encountered during the drilling operation, the holes shall be relocated.

The depth and diameter of each hole shall be as shown on the plans. If the depth and diameter of a hole are not shown on the plans, the hole shall conform to the manufacturer's recommendations for the diameter of the dowel being anchored such that the grouted dowels will be able to develop a pull-out resistance of 125 percent of its nominal yield strength or 100 percent of its tensile strength, whichever is greater.

Hole drilling methods shall not cause spalling, cracking, or other damage to the existing concrete. Those areas damaged by the Contractor shall be repaired by him in a manner suitable to the Engineer and at no expense to the State.

Prior to placing the chemical anchoring material in the holes, the holes shall be cleaned of all dirt, moisture, concrete dust and other foreign material. The dowel and the chemical anchoring material shall be installed in the holes in accordance with the chemical anchoring material manufacturer's recommendations.

The Contractor, as directed by the Engineer, shall take adequate precautions to prevent any materials from dropping to the area below, which may result in damage to any existing construction or to adjoining property. Should any damage occur to the structure as a result of the Contractor's operations, the Contractor shall make repairs at his own expense. The repair work shall be approved in advance and shall be of a quality acceptable to the Engineer.

Method of Measurement: This work will be measured for payment by the actual number of drilled holes in which dowels are embedded and accepted.

Basis of Payment: This work will be paid for at the contract unit price each for "Drilling Holes and Grouting Dowels," which price shall include drilling and preparing holes, furnishing and installing the chemical anchoring material in the holes and all material, equipment, tools and labor incidental thereto.

The cost for furnishing dowels shall be paid for under the item “Deformed Steel Bars - Galvanized”.

Pay Item	Pay Unit
Drilling Holes and Grouting Dowels	e.a.

ITEM #0703030A - PLACEMENT OF CHANNEL BOULDER

Description: Work under this item shall consist of furnishing and placing individual boulders/rounded stone within an existing or proposed channel bed which may consist of rounded stone riprap, riprap or natural streambed material to improve/create aquatic habitat diversity through the proposed site. Furnishing and placement of individual boulders/rounded stone may also be required along streambanks to support slope stabilization efforts. This work shall be done in accordance with the dimension and details shown on the plans/permit, at locations indicated on the plans/permit or as directed by personnel from the Office of Environmental Planning (OEP), an OEP approved representative, and/or a representative of the Department of Energy and Environmental Protection (DEEP).

Materials:

The individual boulder shall be of a size similar to boulders either within or proximate to the proposed site. The boulders shall be generally angular, but shall not have sharp corners or edges as a result of cutting or crushing operations. The boulders should be recessed 6 to 12 inches below the streambed/riverbed elevation.

Rounded stones may be permitted given the size is equal to the individual boulder. Stones consisting of sandstone, shale, or other rock material prone to disintegration will not be permitted.

Boulder/Rounded Stone shall consist of sound, durable rock, resistant to the action of air and water. Either field stone or rough, unhewn quarry stone may be used. The boulder/rounded stone shall be similar in mineral composition and color to the adjacent existing or proposed channel bed.

Boulder/Rounded Stone with visible cracks or spalling will not be permitted. Rock excavated from ledge (bedrock) formations, or broken from larger boulders, will not be accepted. Broken concrete will not be accepted.

Material the Contractor proposes to use must be inspected and approved by the OEP prior to the excavation of material on-site or hauling of the material from an off-site source. A minimum notice of 2 weeks must be given to the OEP for inspection and approval.

Construction Method:

Prior to installation, the Engineer shall ensure that the areas for the boulder/rounded stone placement are to be clear of construction material, equipment, cofferdams, and/or water-handling devices, unless specifically required to be left in place during the installation as indicated in the contract plans or permit.

Notify the OEP at least 2 weeks prior to initiating the placement of boulder/rounded stone. Any and all coordination with the DEEP will be done through the OEP. The Contractor shall react accordingly to this requirement by giving the Engineer sufficient time to fulfill the Engineer's obligation. Placement of the boulder/rounded stone should proceed during periods of low flow whenever possible to ensure proper placement and as directed by the OEP or an OEP approved representative. No work shall be performed without a DEEP representative on site, unless specifically requested otherwise.

The placement of the boulder/rounded stone shall be in accordance with the locations indicated on the plans/permit. The final location may deviate from plans/permit at the discretion of OEP or an OEP approved representative.

If in the opinion of an OEP, DEEP or an approved OEP representative a particular boulder or rounded stone is too large or small for the hydraulic opening or may affect habitat conditions at any location in the work area, the Contractor shall furnish and place alternative boulder/rounded stone as directed.

Equipment: When placing and maneuvering boulder/rounded stones within the channel bed or embedding boulder/rounded stones into the streambank, the Contractor shall use an excavator with an articulated bucket (with thumb). Any other equipment proposed to be used shall be reviewed and approved in advance by OEP or an OEP approved representative.

All disturbed areas as a result of the placement of boulder/rounded stones shall be permanently stabilized using approved sediment and erosion control measures.

Method of Measurement: This work will be measured for payment for each boulder/rounded stone installed and accepted at the locations called for on the plans or as directed by OEP or an OEP approved representative, within the limits of the proposed work.

Basis of Payment: This work will be paid for at the contract unit price each for "Placement of Channel Boulder", completed and accepted. This price shall include all materials, equipment, tools and labor incidental to the installation of each boulder/rounded stone. Channel diversion and dewatering shall be paid under item "Handling Water." Excavation of the channel bed will be paid under the item "Structure Excavation – Earth (Excluding Cofferdam and Dewatering)."

Pay Item	Pay Unit
Placement of Channel Boulder	EA.

ITEM #0707009A - MEMBRANE WATERPROOFING (COLD LIQUID ELASTOMERIC)

Description: Work under this item consists of furnishing and installing a seamless elastomeric waterproofing membrane system applied to a concrete or steel surface as shown on the plans, in accordance with this specification and as directed by the Engineer. Work shall also include conditioning of the surface to be coated and all quality-control testing noted herein.

The completed membrane system shall be comprised of a primer coat followed by the membrane coating which is applied in one or two layers for a minimum total thickness of 80 mil (2 mm). This work shall also include an additional 40 mil (1mm) membrane layer with aggregate broadcast into the material while still wet.

Materials: The membrane waterproofing system shall be one of the following:

1. Eliminator
   Manufacturer: Stirling Lloyd Products, Inc.
   152 Rockwell Road, Building A
   Newington, CT 06111
   860-666-5008

2. Bridge Deck Membrane System
   Manufacturer: Bridge Preservation, LLC
   87 Shawnee Ave.
   Kansas City, Kansas 66105
   913-321-9006

The membrane system shall meet the following requirements:

1. Primer: The primer shall be a 100% reactive, acrylic based, two component, spray applied resin capable of full cure in 40 minutes at 68°F (20°C).

2. Membrane: The membrane shall be 100% solvent free reactive, acrylic based, two component, spray applied material.

3. Aggregate: The aggregate shall be a nonfriable, durable #8 aggregate stone.

The membrane shall meet or exceed the following performance requirements:

PERFORMANCE REQUIREMENT	TEST METHOD	UNITS
Water Vapor Transmission	ASTM E96	0.3 Perms or less
Adhesion (Concrete)	ASTM D4541	150 psi (1.0 MPa) or failure in concrete
Adhesion (Steel)	ASTM D4541	300 psi (2.1 MPa)
Minimum Tensile Strength	ASTM D638, Method A, Die C	940 psi (6.4 MPa)
Minimum Elongation at Break	ASTM D638, Method A, Die C	80%
Crack Bridging	ASTM 1305	Pass @ 10 cycles, 0.125 inch (3.2mm) -15°F (-26°C)
Resistance to Heat Aging	ASTM C1522	Pass

Test Reports: The Contractor shall submit to the Engineer Notarized Test Reports showing conformance with the identified Performance Requirements listed in this specification in tests done no longer than 5 years prior to the anticipated installation date.

Materials Certificate: The Contractor shall submit to the Engineer a Materials Certificate for the primer and membrane in accordance with the requirements of Article 1.06.07.

Construction Methods: At least ten days prior to installation of the membrane system, the Contractor shall submit to the Engineer, the manufacturer's recommended procedure for preparing the deck surface, pre-treatment or preparing at cracks and gaps, treatment at curbs, vertical surfaces or discontinuities, applying the primer and membrane, and placing of aggregated coat. Procedures shall also include recommended repairs of system non-compliant issues identified during application. The system shall be applied to the prepared area(s) as defined in the plans strictly in accordance with the Manufacturer's recommendations.

A technical representative, in the direct employ of the manufacturer, shall be present on-site immediately prior to and during application of the membrane. The representative shall inspect and approve the surface prior to priming, and provide guidance on the handling, mixing and addition of components and observe application of the primer and membrane. The representative shall perform all required quality-control testing and remain on the Project site until the membrane has fully cured.

All quality-control testing, including verbal direction or observations on the day of the installation, shall be recorded and submitted to the Engineer for inclusion in the Project's records. A submittal of the quality-control testing data shall be received by project personnel prior to any paving over the finished membrane or within 24 hours following completion of any staged portion of the work.

1. Applicator Approval: The Contractor's membrane Applicator shall be fully trained and licensed by the membrane manufacturer and shall have successfully completed at least three spray membrane projects in the past five years. The Contractor shall furnish references from those projects, including names of contact persons and the names, addresses and phone numbers of persons who supervised the projects. This information shall be submitted to the Engineer prior to the start of construction. The Engineer shall have sole authority to determine the adequacy and compliance of the submitted information. Inadequate proof of ability to perform the work will be grounds to reject proposed applicators.

2. Job Conditions:

   (a) Environmental Requirements: Air and substrate temperatures shall be between 32°F (0°C) and 104°F (40°C) providing the substrate is above the dew point. Outside of this range, the Manufacturer shall be consulted.

   The Applicator shall be provided with adequate disposal facilities for non hazardous waste generated during installation of the membrane system. The applicator shall follow safety instructions regarding respirators and safety equipment.

   (b) Safety Requirements: All open flames and spark producing equipment shall be removed from the work area prior to commencement of application.

   "No Smoking" signs shall be visibly posted at the job site during application of the membrane waterproofing.

   Personnel not involved in membrane application shall be kept out of the work area.

3. Delivery, Storage and Handling:

   (a) Packaging and Shipping: All components of the membrane system shall be delivered to the site in the Manufacturer's packaging, clearly identified with the products type and batch number.

   (b) Storage and Protection: The Applicator shall be provided with a storage area for all components. The area shall be cool, dry and out of direct sunlight and shall be in accordance with the Manufacturer's recommendations and relevant health and safety regulations.

Copies of Material Safety Data Sheets (MSDS) for all components shall be kept on site for review by the Engineer or other personnel.

(c) Shelf Life - Membrane Components: Packaging of all membrane components shall include a shelf life date sealed by the Manufacturer. No membrane components whose shelf life has expired shall be used.

4. Surface Preparation:

(a) Protection: The Applicator shall be responsible for the protection of equipment and adjacent areas from over spray or other contamination. Parapets and bridge joints shall be masked prior to application of the materials.

(b) Surface Preparation: All concrete components to receive membrane waterproofing shall have cured for a minimum of seven days in accordance with Section 6.01.03. Sharp peaks and discontinuities shall be ground smooth.

Surfaces shall be free of oil, grease, curing compounds, loose particles, moss, algae, growth, laitance, friable matter, dirt, bituminous products, and previous waterproofing materials. If required, degreasing shall be done by detergent washing in accordance with ASTM D4258.

The surface shall be abrasively cleaned, in accordance with ASTM D4259, to provide a sound substrate free from laitance.

The surface profile of the prepared substrate is not to exceed 1/4 inch (6 mm) (peak to valley) and areas of minor surface deterioration of 1/2 inch (13 mm) and greater in depth shall also be repaired. The extent and location of the surface patches require the approval of the Engineer before the membrane system is applied.

Voids, honeycombed areas, and blow holes on vertical surfaces shall be repaired in the same manner.

All steel components to receive membrane waterproofing shall be blast cleaned in accordance with SSPC SP6 and coated with the membrane waterproofing system within the same work shift.

5. Inspection and Testing: Prior to priming of the surface, the Engineer, Applicator and Manufacturer's technical representative shall inspect and approve the prepared substrate.

(a) Random tests for deck moisture content shall be conducted on the substrate by the Applicator at the job site using a "Sovereign Portable Electronic Moisture Master Meter," a "Tramex CMEXpertII Concrete Moisture Meter" or approved equal. The minimum frequency shall be one test per 1000 s.f. (100 sq.m) but not less than three tests per day per bridge. Additional tests may be required if atmospheric conditions change and retest of the substrate moisture content is warranted.

The membrane system shall not be installed on substrate with a moisture content greater than that recommended by the system's manufacturer, but shall not be greater than 6%, whichever is less.

(b) Random tests for adequate tensile bond strength shall be conducted on the substrate using an adhesion tester in accordance with the requirements of ASTM D4541. The minimum frequency shall be one test per 5,000 s.f. (500 sq.m) but not less than three adhesion tests per bridge.

Adequate surface preparation will be indicated by tensile bond strengths of primer to the substrate greater than or equal to 150 psi (1.0 MPa) or failure in a concrete surface and greater than or equal to 300 psi (2.1 MPa) for steel surfaces.

If the tensile bond strength is lower than the minimum specified, the Engineer may request additional substrate preparation. Any primer not adequately applied shall be removed and a new primer applied at the Contractor's expense, as directed by Engineer.

(c) Cracks and grouted joints shall be treated in accordance with the Manufacturer's recommendations, as approved or directed by the Engineer.

6. Application:

(a) The System shall be applied in four distinct steps as follows:
   1) Substrate preparation and gap/joint bridging preparation
   2) Priming
   3) Membrane application
   4) Membrane with aggregate

(b) Immediately prior to the application of any components of the System, the surface shall be dry (see Section 5a of this specification) and any remaining dust or loose particles shall be removed using clean, dry oil-free compressed air or industrial vacuum.

(c) Where the area to be treated is bound by a vertical surface (e.g. curb or wall), the membrane system may be continued up the vertical, as shown on the plans or as directed by the Engineer.

(d) The handling, mixing and addition of components shall be performed in a safe manner to achieve the desired results, in accordance with the Manufacturer's recommendations or as approved or directed by the Engineer.

(e) A neat finish with well defined boundaries and straight edges shall be provided by the Applicator.

(f) Primer: The primer shall consist of one coat with an overall coverage rate of 125 to 175 s.f./gal (3.0 to 4.3sq.m/1) unless otherwise recommended in the manufacturer's written instructions.

All components shall be measured and mixed in accordance with the Manufacturer's recommendations.

The primer shall be spray applied using a single component spray system approved for use by the Manufacturer. If required by site conditions and allowed by the manufacturer, brush or roller application will be allowed.

The primer shall be allowed to cure tack-free for a minimum of 30 minutes or as required by the Manufacturer's instructions, whichever time is greater, prior to application of the first lift of waterproofing membrane.

Porous concrete (brick) may require a second coat of primer should the first coat be absorbed.

(g) Membrane: The waterproofing membrane shall consist of one or two coats for a total dry film thickness of 80 mils (2 mm). If applied in two coats, the second coat shall be of a contrasting color to aid in quality assurance and inspection.

The membrane shall be comprised of Components A and B and a hardener powder which is to be added to Component B in accordance with the Manufacturer's recommendations.

The substrate shall be coated in a methodical manner.

Thickness checks: For each layer, checks for wet film thickness using a gauge pin or standard comb-type thickness gauge shall be carried out typically once every 100 s.f. (9 sq.m). Where rapid set time of the membrane does not allow for wet film thickness checks, ultrasonic testing (steel surfaces only), calibrated point-penetrating (destructive) testing, in-situ sampling (cutout of small sections for measuring thicknesses), or other methods approved by the Engineer shall be employed for determination of dry film thickness. The measured thickness of each and every individual test of the membrane shall be greater than or equal to the required thickness.

Bond Strength: Random tests for adequate tensile bond strength shall be conducted on the membrane in accordance with the requirements of ASTM D4541. The minimum test frequency shall be one test per 5,000 s.f. (500 sq.m) but no less than three adhesion tests per bridge. Adequate adhesion will be indicated by tensile bond strengths of the membrane to the substrate of greater than or equal to 150 psi (0.7 MPa) or failure in a concrete surface and greater than or equal to 300 psi (2.1 MPa) for steel surfaces.

Spark Testing: Following application of the membrane, test for pin holes in the cured membrane system over the entire application area in accordance with ASTM D4787- "Continuity Verification of Liquid or Sheet Linings Applied to Concrete Substrates." Conduct the test at voltages recommended by the manufacturer to prevent damage to the membrane.

Repair the membrane system following destructive testing and correct any deficiencies in the membrane system or substrate noted during quality-control testing in accordance with the manufacturer's recommendations to the satisfaction of the Engineer at no additional cost to the State.

(h) Repairs: If an area is left untreated or the membrane becomes damaged, a patch repair shall be carried out to restore the integrity of the system. The damaged areas shall be cut back to sound materials and wiped with solvent (e.g. acetone) up to a width of at least four inches (100 mm) on the periphery, removing any contaminants unless otherwise recommended by the manufacturer. The substrate shall be primed as necessary, followed by the membrane. A continuous layer shall be obtained over the substrate with a four inches (100 mm) overlap onto existing membrane.

Where the membrane is to be joined to existing cured material, the new application shall overlap the existing by at least four inches (100 mm). Cleaning and surface preparation on areas to be lapped shall be as recommended in the manufacturer's written instructions.

(i) Aggregated Finish:
1) Apply an additional 40 mil (1 mm) thick layer of the membrane material immediately followed by an aggregate coating, before the membrane cures, at a rate to fully cover the exposed area. The membrane and aggregate shall be fully integrated after the aggregate has been applied and the membrane cured.
2) Localized areas not fully coated shall be touched-up with additional membrane and aggregate as needed.
3) Remove loose and excess aggregate from the surface to the satisfaction of the Engineer and dispose of properly after application prior to allowing traffic onto finished surface or application of tack coat.

(j) Tack Coat:
Prior to application of a bituminous concrete overlay, the aggregated finish shall be coated with tack coat in accordance with Section 4.06.

7. Final Review: The Engineer and the Applicator shall jointly review the area(s) over which the completed System has been installed. Any irregularities or other items that do not meet the requirements of the Engineer shall be addressed at this time.

Method of Measurement: The quantity to be paid for under this item shall be the number of square yards (square meters) of waterproofed surface completed and accepted.

Basis of Payment: This item will be paid for at the contract unit price per square yard (square meter) of "Membrane Waterproofing (Cold Liquid Elastomeric)," complete in place, which price shall include all surface preparation, furnishing, storing and applying the system, technical representative and quality control tests, and any necessary repairs and remediation work as well as all materials, equipment, tools, labor incidental to this work.

Pay Item	Pay Unit
Membrane Waterproofing (Cold Liquid Elastomeric)	s.y. (sq.m)

ITEM #0714050A - TEMPORARY EARTH RETAINING SYSTEM

Description: Temporary earth retaining system shall be any type of adequately braced temporary retaining wall such as temporary sheet piling which the Contractor elects to build to satisfy, and which does satisfy, the condition that existing facilities be properly retained during excavation or fill for the placement of substructure or other facilities. Temporary earth retaining system shall be designed by the Contractor and constructed where shown on the plans. This system shall be removed upon completion of the permanent work, except that some sections may be left in place when so ordered by the Engineer.

Materials: Materials of steel sheet piling shall conform to the requirement of ASTM A 328. Timber sheet piling shall conform to the requirements of Subarticle M.09.01-1. Materials other than steel or timber, or a combination of these may be used provided they are properly designed for the purpose intended. Systems utilizing other material(s) shall conform to the manufacturer's specifications and project specifications. The parts list shall be furnished for the proprietary system and the Contractor shall provide the material certificates for the parts.

Construction Methods: Temporary earth retaining system shall be safely designed and shall be carried to adequate depths and braced as necessary for proper performance of the work. Construction shall be such as to permit excavation or fill as required. Interior dimensions shall be such as to give sufficient clearance for construction of forms and their inspection and for battered pile clearance when necessary. Movements of the system or bracing which prevent the proper completion of the substructure shall be corrected at the sole expense of the Contractor. No part of the temporary earth retaining system or bracing shall be allowed to extend into the substructure without written permission of the Engineer.

Working drawings and design calculations for temporary earth retaining system shall be submitted in accordance with the requirements of Article 1.05.02(2). The working drawings and design calculations shall be prepared, sealed, and signed by a Professional Engineer, licensed in the State of Connecticut. The furnishing of such plans shall not serve to relieve the Contractor of any part of his responsibility for the safety of the work or for the successful completion of the project.

Unless otherwise ordered by the Engineer, all parts of the temporary earth retaining system shall be removed upon completion of the work for which it was provided. The excavation shall be backfilled and properly compacted, prior to removal of the system unless otherwise permitted by the Engineer. Temporary earth retaining system may be left in place at the option of the Contractor if so permitted by the Engineer, provided that it is cut off at an elevation as directed by the Engineer and the cutoffs removed from the site.

Method of Measurement: Temporary earth retaining system will be measured for payment by the number of square feet of temporary retaining wall completed and accepted, as computed from the horizontal and vertical payment lines shown on the plans or as ordered. If no payment limits are shown on the plans, the limits used for payment will be the actual horizontal limit of temporary earth retaining system installed and accepted, and the vertical limit as measured from

the bottom of the exposed face of the wall system to the top of the retained earth behind the system. The measurement for temporary earth retaining system which is used as a common wall for staged construction will be the horizontal payment limit shown on the plans and the greater vertical dimension of the common wall face.

No measurement will be made of end extensions or returns necessary for the safety of the retained facility. Earth retaining system ordered left in place by the Engineer shall be measured in accordance with "Earth Retaining System Left in Place."

Earth retaining systems left in place solely at the Contractor's option, and with the Engineer's permission, will not have an additional payment at the contract unit price per square foot for "Earth Retaining System Left in Place."

Basis of Payment: Payment for this work will be made at the contract unit price per square foot for "Temporary Earth Retaining System" measured as described above, which price shall include all design, materials, equipment and labor incidental to the construction and removal of the temporary earth retaining system required at the locations specified on the plans; including removal of obstructions, repair and correction, adjustments or reconstruction required by the plans. Any common earth retaining system required for staged construction will be measured for payment only once.

Pay Item	Pay Unit
Temporary Earth Retaining System	s.f.

ITEM #0715050A - EARTH RETAINING SYSTEM LEFT IN PLACE

Description: This specification covers only that portion of the temporary earth retaining system that may be ordered left in place by the Engineer or designated in the plans to be left in place.

Materials: Vacant

Construction Methods: The Contractor shall submit to the Engineer for approval, plans showing the proposed method of construction prior to the start of such construction.

Method of Measurement: Earth retaining system material left in place will be measured for payment by the square foot. This area will be measured or computed from the horizontal and vertical payment limits shown on the plans or as ordered. If no payment limits are shown on the plans, the limits used for payment will be the actual horizontal limit of temporary earth retaining system ordered or designated in the plans to be left in place, and the vertical limit will correspond to the method of measurement of the temporary earth retaining system.

Temporary earth retaining system left in place solely at the Contractor's option, and with the Engineer's permission, will not be measured for payment.

Basis of Payment: Payment for this work will be made as follows:

That portion of the temporary earth retaining system ordered or designated in the plans to be left in place will be paid for at the contract unit price per square foot for "Earth Retaining System Left in Place," applying to one or more structures or portions of structures, which price shall include only the cost of material left in place. All other expenses shall be paid for under the item for "Temporary Earth Retaining System."

Pay Item	Pay Unit
Earth Retaining System Left in Place	s.f.

ITEM #0913952A - PROTECTIVE FENCE (5' HIGH)

Description: Work under this item consists of furnishing and installing chain link fencing in accordance with the details shown on the plans and with these specifications.

Materials: Materials for this work shall be as follows:

1. **Chain Link Fabric:** The fabric shall be a black Poly(Vinyl Chloride) (PVC) - coated steel chain link type, conforming to the specifications of ASTM F668, Class 2b, thermally fused and bonded. The #9 gage core wire shall be galvanized, PVC-coated, then woven to create a continuous fabric having a two inch mesh, knuckled at both top and bottom. The PVC coating shall be the color black as described in ASTM F934.

2. **Base plates, Posts, Tension Wire and Rails:** The material used to manufacture framework for color chain link fencing systems shall be galvanized sheet steel, in coils, meeting the general requirements of ASTM A924 and the specific product requirements of ASTM A653, quality level HSLA (high strength, low alloy), Type I, Grade 50 (50,000 psi minimum yield strength), coating designation Z600 (2.0 oz./ ft^2) applied by the hot-dip process. The framework shall be manufactured in accordance with commercial standards to meet the requirements of ASTM F1043, Group IC, electrical resistance welded round steel pipe. Base plates shall conform to ASTM A709, Grade 36 and shall be shop welded to the fence posts. All burrs and sharp edges shall be removed and smoothed before galvanizing. Posts, with bottoms to be angle cut as required for grade, shall be welded to the base plates before coating. All welding shall conform to the requirements of Subarticle 6.03.03-c). The base plate/post assembly shall be coated after fabrication. The tension wire shall conform to the manufacturer's specifications.

3. The manufactured framework shall be subjected to a complete thermal stratification coating process (multi-stage, high temperature, multi-layer) including a pretreatment wash with zinc phosphate, an electrostatic spray application of an epoxy base, and a separate electrostatic spray application of a polyester finish. The color of the finish coat shall be black.

4. The material used for the base coat shall be a zinc-rich thermosetting epoxy. The minimum thickness of the base coat shall be 2 mils. The material used for the finish coat shall be a thermosetting "no mar" TriGlycidyl IsoCyanurate (TGIC) polyester powder. The minimum thickness of the finish coat shall be 2-3 mils.

5. The coated framework shall demonstrate the ability to endure a salt spray resistance test conducted in accordance with ASTM B117 without loss of adhesion for a minimum exposure time of 3,500 hours. Additionally, the coated framework shall demonstrate the ability to withstand exposure in a weatherometer apparatus for 1,000 hours without failure in accordance with Practice D1499 and to show satisfactory adhesion when subjected to the cross-hatch test in accordance with ASTM D3359. The polyester finish coat shall not fade, crack, blister or split under normal use.

6. **Fence Fittings:** All materials and coating requirements shall conform to the specifications of ASTM F626. All fittings shall receive the same coating system as the posts and rails. The ties used to fasten the fabric to the post and rails shall not be less than #6 and #9 gage respectively.

7. **Galvanizing Compound:** Galvanizing compound shall conform to the requirements of Federal Specification TT-P-641b or Military Specification MIL-P-21035.

8. **Non-shrink Grout**: Grout used to anchor fence posts in preformed holes shall be non-shrink and non-staining and shall conform to the requirements of Article M.03.05 – Non Shrink, Non Staining Grout.

9. **Silicone Joint Seal:** Joint seal placed around the base of the posts to seal the interface between the post and the non-shrink grout shall conform to the requirements of "Section 6.01 - Concrete for Structures".

All components of the chain link fence shall be the color black as described in ASTM F934. Coating which exhibits peeling or chipping will be cause for rejection of the shipment.

Materials Certification and Testing: The Contractor shall furnish a Materials Certificate in accordance with Article 1.06.07 for the fabric, posts, rails, all fittings and for the chemical anchoring material. A sample of PVC-coated fabric shall be submitted to the Department for testing the bond of the coating in accordance with the requirements of ASTM F668, Class 2b.

***Shop Drawings*:** Before fabricating any materials, the Contractor shall submit shop drawings to the Engineer for approval in accordance with Article 1.05.02. These drawings shall include but not be limited to the following information: a layout plan showing all post and rail spacing, all fence and anchorage details, material lists and material designations and the name and telephone number of a person to contact who can answer questions about the shop drawings..

Construction Methods: The protective fence shall be accurately fabricated and installed in accordance with the plans and as directed by the Engineer.

Posts shall be centered in the preformed holes in the concrete and held plumb. Non-shrink grout shall then be placed in the annular space around the post, overfilling the hole to build the grout up above the surrounding concrete so water drains away from the post.

After the grout has completely set, place silicone joint sealant around the base of the post against the non-shrink grout to seal against moisture intrusion around the post.

All rails shall be erected to produce a smooth, continuous appearance with posts placed vertically and with all rails parallel to the grade of the parapets. The fabric shall be stretched tightly

between end posts and securely fastened with stretcher bar bands. The fabric shall be attached to the rails and line posts as shown on the plans. Dome caps shall be installed on top of all posts.

Coated fabric, fence posts, rails and fittings shall be handled with care so the coating is not damaged. Damage to the galvanized coating below the finish coating shall be repaired in accordance with ASTM A780 with two coats of galvanizing compound before repairing the finish coat. The final dry film thickness of the galvanizing compound shall be a minimum of 2 to 3 mils. Damage to coating shall be repaired as directed by the manufacturer.

Method of Measurement: This work will be measured for payment by the number of linear feet of completed and accepted fence, measured horizontally from centerline to centerline of posts.

Basis of Payment: This work will be paid for at the contract unit price per linear foot for "Protective Fence (5' High)", complete and accepted in place, which price includes all materials, equipment, tools and work incidental thereto.

Pay Item	Pay Unit
Protective Fence (5' High)	l.f.

ITEM #0949160A - SPECIAL SOIL PREPARATION

Description: This work shall consist of soil preparation, and composted leaves application at the locations indicated on the plans, or as directed by the Engineer.

Materials: Composted leaves from a source to be approved by the Engineer.

Construction Methods: The Contractor shall perform deep plowing or sub-soiling, to a depth of 18" to 20", shall be performed by using either a chisel plow or a backhoe. The Contractor shall perform deep plowing or sub-soiling operations at a time of optimum moisture content as approved by the Engineer.

After deep plowing or sub-soiling is performed, the Contractor shall rake the areas to a uniform surface. Thereafter, apply 3" of composted leaves to the entire surface which has been deep plowed or sub-soiled. Rototill the composted leaves into the top 4" to 5" of soil, assuring a thorough incorporation into the soil. The Contractor shall then place the topsoil at the locations and depth indicated on the plans, or as directed by the Engineer.

Method of Measurement: Special Soil Preparation will be measured for payment by the number of square yard of surface area which have been deep plowed or sub-soiled, rototilled and amended with composted leaves, and raked to a uniform surface.

Basis of Payment: Special Soil Preparation will be paid for at the contract unit price per square yard For "Special Soil Preparation" which price shall include all materials, equipment, tools, labor and work incidental thereto.

Pay Item	Pay Unit
Special Soil Preparation	Square Yard

ITEM #0950019A - TURF ESTABLISHMENT - LAWN

Description: The work included in this item shall consist of providing an accepted stand of grass by furnishing and placing seed as shown on the plans or as directed by the Engineer.

Materials: The materials for this work shall conform to the requirements of Section 9.50 of Standard Specification Form 816. The following mix shall be used for this item:

Turf Seed Mix:
In order to preserve and enhance the diversity, the source for seed mixtures shall be locally obtained within the Northeast USA including New England, New York, Pennsylvania, New Jersey, Delaware, or Maryland. One approved seed mixture is detailed below. Other proposed mixtures must be approved by the ConnDOT Landscape Design office.

Proportion (Percent)	Species Common name	Scientific name
25	Abbey Kentucky Bluegrass	Poa pratensis
15	Envicta Kentucky Bluegrass	Poa pratensis
25	Pennlawn Red Fescue	Festuca rubra
15	Ambrose Chewing Fescue	Festuca rubra
20	Manhattan Ryegrass	Lolium perenne

Construction Methods: Construction Methods shall be those established as agronomically acceptable and feasible and that are approved by the Engineer. Rate of application shall be field determined in Pure Live Seed (PLS) based on the minimum purity and minimum germination of the seed obtained. Calculate the PLS for each seed species in the mix. Adjust the seeding rate for the above composite mix, based on 250 lbs. (274 kg.) per acre (hectare). The seed shall be mulched in accordance with Article 9.50.03.

Method of Measurement: This work will be measured for payment by the number of square yards (square meters) of surface area of accepted established grasses as specified or by the number of square yards (square meters) of surface area of seeding actually covered and as specified.

Basis of Payment: This work will be paid for at the contract unit price per square yard (square meters) for "Turf Establishment - Lawn" which price shall include all materials maintenance, equipment, tools, labor, and work incidental thereto. Partial payment of up to 60% may be made for work completed, but not accepted.

Pay Item	Pay Unit
Turf Establishment - Lawn	S.Y. (S.M.)

ITEM #0950040A - CONSERVATION SEEDING FOR SLOPES

Description: The work included in this item shall consist of providing an accepted stand of established meadow grasses by furnishing and placing seed as shown on the plans or as directed by the Engineer.

Materials: The materials for this work shall conform to the requirements of Section 9.50 of Standard Specification Form 816. The following mix shall be used for this item:

Conservation Seed Mix:
In order to preserve and enhance the diversity, the source for seed mixtures shall be locally obtained within the Northeast USA including New England, New York, Pennsylvania, New Jersey, Delaware, or Maryland. One approved seed mixture is detailed. Other proposed mixtures must be approved by the ConnDOT Landscape Design Unit.

Percentage	Common Name	Scientific Name
25	Creeping Red Fescue	Festuca rubra
10	Little Bluestem	Schizachyrium scoparium
10	Black Eyed Susan	Rudbeckia hirta
10	Kentucky Blue Grass	Poa pratensis
10	Arrowwood Viburnum	Viburnum dentatum
10	Flowering Dogwood	Cornus florida
10	Gray Dogwood	Cornus racemosa
5	Meadow Goldenrod	Solidago canadensis
5	Indian Grass	Sorghastrum nutans
5	Partridge Pea	Chamaecrista fasciculate

Construction Methods: Construction Methods shall be those established as agronomically acceptable and feasible and that are approved by the Engineer. Rate of application shall be 25 lbs. per acre. The seed shall be mulched in accordance with Article 9.50.03.

Method of Measurement: This work will be measured for payment by the number of Square Yards of surface area of accepted established grasses as specified or by the number of Square Yards of surface area of seeding actually covered and as specified.

Basis of Payment: This work will be paid for at the contract unit price per Square Yard for "Conservation Seeding for Slope," which price shall include all materials maintenance, equipment, tools, labor, and work incidental thereto. Partial payment of up to 60% may be made for work completed, but not accepted.

Pay Item	Pay Unit
Conservation Seeding for Slopes	Square Yard

ITEM #0952051A - CONTROL AND REMOVAL OF INVASIVE VEGETATION

Description: This work shall include all materials, labor and equipment necessary for the identification, eradication, removal, and disposal of unwanted vegetation in locations either indicated on the plan sheets or as directed by a Landscape Designer from the Connecticut Department of Transportation's Landscape Design Unit. While any and all invasive species, including those listed on the website for the Connecticut Invasive Plant Working Group's (CIPWG) Invasive Plants Council (http://www.hort.uconn.edu/cipwg/ IPC.html), may be subject to eradication at the direction of the Landscape Designer, the following species must always be eradicated: tree-of-heaven (*Ailanthus altissima*), Russian and autumn olive (*Elaeagnus angustifolia and E. umbellata*), smooth buckthorn *(Rhamnus cathartica)* and glossy buckthorn (*Frangula alnus*), multiflora rose (*Rosa multiflora*), Japanese barberry (*Berberis thunbergii*), winged euonymus (*Euonymus alata*), shrub honeysuckles (*Lonicera maackii, L. morrowii, L. tartarica,L. X bella, L. xylosteum*), privet (*Ligustrum obtusifolium, L. ovalifolium, L. sinense, L. vulgare*), Oriental bittersweet (*Celastrus orbiculatus*), Japanese knotweed (*Polygonum cuspidatum*), common reed *(Phragmites australis)*, and reed canary grass (*Phalaris arundinacea*). If project-specific invasive species additional to those listed above need to be removed, the Landscape Designer will give appropriate direction.

All vegetation designated for removal shall be eradicated in its entirety in accordance with the methods submitted by the Contractor and approved by the Landscape Designer. Some work will be completed within areas where desirable species are present and will remain. The Contractor will be responsible for protection of desirable species that are to remain.

Materials: Mechanical removal shall consist of either manual labor, utilizing a weed wrench or other approved machine, or some other approved method that will enable removal of all root pieces and other parts of the target species while minimizing soil disturbance and avoiding any spread of invasive plant material. Where large infestations of invasive/unwanted vegetation are present and identified on the plans, removal via over-excavation of such vegetation and the underlying soils may be required

All herbicides shall be registered for the species being treated and shall be formulated as applicable for target-species foliar treatment, cut surface, or injection applications. Where work in or immediately adjacent to wetlands is necessary, the product label(s) for any chemical/adjuvant formulation applied must indicate that the formulation is approved for aquatic environments.

Construction Methods: The Contractor shall have sole responsibility for identifying all invasive species present within the invasive removal areas called out in the contract documents prior to the Pre-Construction Meeting. The Contractor shall submit the required invasive removal plan at the Pre-Construction Meeting for the review and approval of the Landscape Designer. This plan shall include a list of all invasive species present on site, along with a schedule of operations and an outline of construction methodologies for the required control and removal of invasive vegetation specific to each species listed.

While the Landscape Designer will review the Contractor's delineation and removal plan, the Contractor must be competent to identify invasive vegetation at all times of the year and to prepare a plan for its eradication without assistance.

During the Pre-Construction Meeting, a field review shall be scheduled so that the Contractor and the Landscape Designer can review the areas of invasive species removal, the specific species required to be removed, and the Contractor's submitted invasive species control plan. At this time, the Landscape Designer may designate areas for removal that are additional to those shown on the plans. If changes are required to the originally submitted plan, these changes must be submitted to the Landscape Designer at least 10 days prior to beginning work.

Upon receiving a Notice to Proceed, the Contractor will delineate all areas designated for invasive species removal. The Contractor will be responsible for maintaining this delineation throughout the life of the contract.

The Contractor will not be allowed to begin construction activities in the designated removal areas until all schedules, outlines, and methodologies are approved in writing by the Landscape Designer. This schedule must take into consideration the time period required between herbicide application and the physical removal of the target species wherever such removal is to occur. No removal work can occur for a minimum of two weeks after herbicide application. In all cases, the submitted schedule shall consider mechanical methods for removal before proposing herbicide application.

The schedule and outline shall include:

1) The type(s) of invasive species identified in the designated area(s);
2) Species specific treatment methods describing a full course of treatment for each species to achieve eradication. These methods must show:
    a. Removal methods planned (e.g. pulling, cutting, spraying, etc);
    b. Types and concentrations of any herbicides to be used, including any adjuvants; and
    c. Schedules showing dates and types of initial, intermediate and final treatments;
3) Any construction activities planned in designated removal area(s) during the eradication period;
4) Disposal methods, including:
    a. Onsite methods and locations; and
    b. Requests for off-site disposal locations;
5) Proof of DEEP licensure for herbicide application;
6) A description of safety equipment required; and
7) Procedures for handling chemical spills.

The Contractor shall also:

a. Maintain the labels for herbicides being used in his/her possession;
b. Provide Landscape Design with a 10 day work notice prior to proceeding so that the Landscape Designer can schedule to be present when appropriate;
c. Conduct all herbicide formulations and applications, including the addition of appropriate surfactants and other adjuvants, in strict conformance with the

manufacturer's recommendation and per requirements of regulatory agencies; and

d. Maintain a written record of herbicide application, including the formulation, concentration, area treated, and date for each application, to be provided by the commercial applicator and submitted to the Landscape Designer following each treatment.

A “treatment period” for each designated area will be derived from the schedule submitted by the Contractor and determined by the following:

1) The first treatment date of the earliest treatable vegetation; and
2) The last treatment date of the latest treatable vegetation

It is anticipated that many species will require more than one season to obtain complete eradication. The treatment period must take into consideration those species that will require follow up treatments and more than one season for complete eradication. Upon completion of the treatment period, the Contractor shall notify the Landscape Designer in writing of the status of eradication. If the eradication has not been successful, the Contractor shall also submit additional treatment plans. If the Contractor believes that eradication has been achieved, the Contractor shall request a site inspection by the Landscape Designer for concurrence. If the Landscape Designer concurs that eradication has been achieved, the area will be subject to a one (1) year warranty starting on the first day following the inspection by the Landscape Designer. During this period the Contractor will be responsible for any further occurrences of the invasive species inside the delineated area.

The Contractor will be responsible for removal and eradication of all plant material deemed as invasive or unwanted within the delineated area(s) for the duration of the project or until relieved of responsibility of the removal item, and the delineation shall remain in place until this time.

Flush cut brush and trees shall not be more than 2 inches (50mm) above the ground line. Flush cutting shall be performed in a controlled manner that will prevent the spread of parts or seeds of invasive species. Brush hogging or any other clearing method that may promote the spread of invasive plant material is also not permissible.

Broadcast or uncontrolled spray application will not be permitted, and care must be taken to avoid contacting non-target species and/or deterring the recolonization of native species following application.

Remove all twining vines in treetops to the greatest extent possible without damaging the branches of the supporting desired vegetation. Cut and remove vines overtopping tree canopies. Climbing spikes will not be permitted for aerial work.

Prune out any branches on non-treatment plants that are damaged during removal of vegetation. All corrective pruning shall conform to the National Arborists Association Pruning Standards.

The site must be monitored by the Contractor and any new or regrowth treated prior to beginning installation of any landscape plantings.

Processing and disposal of unwanted vegetation shall be done in a controlled manner so as not to spread invasive seed or plant parts within the surrounding areas. All cut invasive vegetation shall be separated from clearing and grubbing operations and all other cleared material. Invasive plant materials may be buried on site within the Department ROW provided that they are under a minimum of 10 feet (3.0 m) of cover on all sides for Japanese knotweed and phragmites and 3 feet (1 m) of cover on all sides for all other species and/or removed from the site and disposed of at the approved location(s) identified in the Contractor's submitted schedule and outline of construction methodologies.

No equipment or vehicles other than that required to complete the work will be permitted in the areas designated for invasive vegetation removal. Any equipment used to process invasive materials, such as chippers and transport vehicles, must be cleaned prior to further use. Processing equipment must also be cleaned prior to further transport.

Wherever removal operations result in exposed soils, disturbed areas must be vegetatively stabilized with the appropriate seed mix and protected with hay, cellulous fiber mulch, or erosion control matting. The application rate for hay mulch and fiber mulch shall be 3500 lbs per acre (3920 kg/hectare).

Method of Measurement: The control and removal of invasive vegetation will be measured by the number of square yards (square meters) of invasive and unwanted vegetation identified and eradicated as required above, including any required re-treatment of any regrowth or new growth. The area for removal will be delineated prior to treatment and measured for payment. After a review of the delineated areas, the Landscape Designer may designate additional areas for removal that are not shown on the plans. These additional areas will be delineated, measured for payment, and included as part of the contract work.

Where selective removal is required, the drip line of the invasive vegetation will be measured for payment and shall include larger trees.

Basis of Payment: This work will be paid for at the contract unit price per square yard (square meter) for "Control and Removal of Invasive Vegetation". This payment shall include all labor, materials, tools, and equipment necessary for delineation of the invasive area(s); maintenance of the delineation throughout the project; species identification; and cutting, treating, re-treating, removal, and on or off-site disposal of designated invasive plant material. Off-site disposal of residue shall include the loading, transport, dumping, and fees associated with legal off-site disposal.

- Upon approval of the required schedules, the Contractor will receive a payment equal to 10% of all areas delineated.
- Upon initial treatment as it is described in the schedule of operations, the Contractor will receive a payment equal to 30% of all areas receiving initial treatment.
- Upon successful completion of the treatment period as determined during the site review by the Landscape Designer, the Contractor will receive a payment equal to 30% of all areas receiving final treatment.

- Upon successful completion of the 1 year warranty period covering all treated areas on the project, the contractor will receive a payment equal to 30% of the areas treated.

Where excavation is required for removal, this work shall be covered under the contract Item "Earth Excavation". All other vegetation removed shall be included in the Item "Clearing and Grubbing" in accordance with Section 2.01.

Vegetative stabilization of disturbed areas shall be paid for under the respective contract Items: "Turf Establishment", "Wetland Grass Establishment", and/or "Conservation Seeding for Slopes".

Pay Item	**Pay Unit**
Control and Removal of Invasive Vegetation	S.Y. (S.M.)

ITEM #0969060A - CONSTRUCTION FIELD OFFICE, SMALL

Description: Under the item included in the bid document, adequate weatherproof office quarters with related materials, equipment and other services, shall be provided by the Contractor for the duration of the work, and if necessary, for a close-out period determined by the Engineer. The office, materials, equipment, and services are for the exclusive use of CTDOT forces and others who may be engaged to augment CTDOT forces with relation to the Contract. The office quarters shall be located convenient to the work site and installed in accordance with Article 1.08.02. This office shall be separated from any office occupied by the Contractor. Ownership and liability of the office quarters shall remain with the Contractor.

Materials/Supplies/Equipment: Materials shall be in like new condition for the purpose intended and shall be approved by the Engineer.

Office Requirements: The Contractor shall furnish the office quarters and equipment as described below.

Description \ Office Size	Small	Med.	Large	Extra Large
Minimum Sq. Ft. of floor space with a minimum ceiling height of 7 ft.	400	400	1000	2000
Minimum number of exterior entrances.	2	2	2	2
Minimum number of parking spaces.	7	7	10	15

Office Layout: The office shall have a minimum square footage as indicated in the table above, and shall be partitioned as shown on the building floor plan as provided by the Engineer.

Tie-downs and Skirting: Modular offices shall be tied-down and fully skirted to ground level.

Lavatory Facilities: For field offices sizes Small and Medium the Contractor shall furnish a toilet facility at a location convenient to the field office for use by Department personnel and such assistants as they may engage; and for field offices sizes Large and Extra Large the Contractor shall furnish two (2) separate lavatories with toilet (men and women), in separately enclosed rooms that are properly ventilated and comply with applicable sanitary codes. Each lavatory shall have hot and cold running water and flush-type toilets. For all facilities the Contractor shall supply lavatory and sanitary supplies as required.

Windows and Entrances: The windows shall be of a type that will open and close conveniently, shall be sufficient in number and size to provide adequate light and ventilation, and shall be fitted with locking devices, blinds and screens. The entrances shall be secure, screened, and fitted with a lock for which four keys shall be furnished. All keys to the construction field office shall be furnished to the Department and will be kept in their possession while State personnel are using the office. Any access to the entrance ways shall meet applicable building codes, with appropriate handrails. Stairways shall be ADA/ABA compliant and have non-skid tread surfaces. An

ADA/ABA compliant ramp with non-skid surface shall be provided with the Extra-Large field office.

Lighting: The Contractor shall equip the office interior with electric lighting that provides a minimum illumination level of 100 foot-candles at desk level height, and electric outlets for each desk and drafting table. The Contractor shall also provide exterior lighting that provides a minimum illumination level of 2 foot-candles throughout the parking area and for a minimum distance of 10 ft. on each side of the field office.

Additional Equipment, Facilities and Services: The Contractor shall provide at the field Office at least the following to the satisfaction of the Engineer:

Parking Facility: The Contractor shall provide a parking area, adjacent to the field office, of sufficient size to accommodate the number of vehicles indicated in the table above. If a paved parking area is not readily available, the Contractor shall construct a parking area and driveway consisting of a minimum of 6 inches of processed aggregate base graded to drain. The base material will be extended to the office entrance.

Field Office Security: Physical Barrier Devices - This shall consist of physical means to prevent entry, such as: 1) All windows shall be barred or security screens installed; 2) All field office doors shall be equipped with dead bolt locks and regular day operated door locks; and 3) Other devices as directed by the Engineer to suit existing conditions.

Electric Service: The field office shall be equipped with an electric service panel to serve the electrical requirements of the field office, including: lighting, general outlets, computer outlets, calculators etc., and meet the following minimum specifications:

A. 120/240 volt, 1 phase, 3 wire
B. Ampacity necessary to serve all equipment. Service shall be a minimum 100 amp dedicated to the construction field office.
C. The electrical panel shall include a main circuit breaker and branch circuit breakers of the size and quantity required.
D. Additional 120 volt, single phase, 20 amp, isolated ground dedicated power circuit with dual NEMA 5-20 receptacles will be installed at each computer workstation location.
E. Additional 120 volt, single phase, 20 amp, isolated ground dedicated power circuit with dual NEMA 5-20 receptacles will be installed, for use by the Telephone Company.
F. Additional 120-volt circuits and duplex outlets as required meeting National Electric Code requirements.
G. One exterior (outside) wall mounted GFI receptacle, duplex, isolated ground, 120 volt, straight blade.
H. After work is complete and prior to energizing, the State's CTDOT electrical inspector, must be contacted at 860-594-2240. (Do Not Call Local Town Officials)
I. Prior to field office removal, the CTDOT Office of Information Systems (CTDOT OIS) must be notified to deactivate the communications equipment.

Heating, Ventilation and Air Conditioning (HVAC): The field office shall be equipped with sufficient heating, air conditioning and ventilation equipment to maintain a temperature range of 68°-80° Fahrenheit within the field office.

Telephone Service: The Contractor shall provide telephone service with unlimited nation-wide calling plan. For a Small, Medium and Large field office this shall consist of the installation of two (2) telephone lines: one (1) line for phone/voice service and one (1) line dedicated for the facsimile machine. For an Extra-Large field office this shall consist of four (4) telephone lines: three (3) lines for phone/voice service and one (1) line dedicated for facsimile machine. The Contractor shall pay all charges.

Data Communications Facility Wiring: Contractor shall install a Category 5e 468B patch panel in a central wiring location and Cat 5e cable from the patch panel to each PC station, terminating in a (category 5e 468B) wall or surface mount data jack. The central wiring location shall also house either the data circuit with appropriate power requirements or a category 5 cable run to the location of the installed data circuit. The central wiring location will be determined by the CTDOT OIS staff in coordination with the designated field office personnel as soon as the facility is in place.

For a Small, Medium and Large field office the Contractor shall run a CAT 5e LAN cable a minimum length of 25 feet for each computer to LAN switch area leaving an additional 10 feet of cable length on each side with terminated RJ45 connectors. For an Extra-Large field office the Contractor shall run CAT 5e LAN cables from workstations, install patch panel in data circuit demark area and terminate runs with RJ45 jacks at each computer location. Terminate runs to patch panel in LAN switch area. Each run / jack shall be clearly labeled with an identifying Jack Number.

The installation of a data communication circuit between the field office and the CTDOT OIS in Newington will be coordinated between the CTDOT District staff, and the local phone company. The CTDOT District staff will coordinate the installation of the data communication service with CTDOT OIS once the field office phone number is issued. The Contractor shall provide the field office telephone number(s) to the CTDOT Project Engineer within 10 calendar days after the signing of the Contract as required by Article 1.08.02. This is required to facilitate data line and computer installations.

The following furnishings and equipment shall be provided in the applicable field office type:

Furnishing Description	Office Size			
	Small	Med.	Large	Extra Large
	Quantity			
Office desk (2.5 ft x 5 ft) with drawers, locks, and matching desk chair that have pneumatic seat height adjustment and dual wheel casters on the base.	1	3	5	8
Standard secretarial type desk and matching desk chair that has pneumatic seat height adjustment and dual wheel casters on the base.	-	-	-	1
Personal computer tables (4 ft x 2.5 ft).	2	3	5	8
Drafting type tables (3 ft x 6 ft) and supported by wall brackets and legs; and matching drafters stool that have pneumatic seat height adjustment, seat back and dual wheel casters on the base.	1	1	1	2
Conference table, 3 ft x 12 ft.	-	-	-	1
Table – 3 ft x 6 ft.	-	-	-	1
Office Chairs.	2	4	8	20
Mail slot bin – legal size.	-	-	1	1
Non-fire resistant cabinet.	-	-	2	4
Fire resistant cabinet (legal size/4 drawer), locking.	1	1	2	3
Storage racks to hold 3 ft x 5 ft display charts.	-	-	1	2
Vertical plan racks for 2 sets of 2 ft x 3 ft plans for each rack.	1	1	2	2
Double door supply cabinet with 4 shelves and a lock – 6 ft x 4 ft.	-	-	1	2
Case of cardboard banker boxes (Min 10 ea)	1	1	2	3
Open bookcase – 3 shelves – 3 ft long.	-	-	2	2
White Dry-Erase Board, 36” x 48”min. with markers and eraser.	1	1	1	1
Interior partitions – 6 ft x 6 ft, soundproof type, portable and freestanding.	-	-	6	6
Coat rack with 20 coat capacity.	-	-	-	1
Wastebaskets - 30 gal., including plastic waste bags.	1	1	1	2
Wastebaskets - 5 gal., including plastic waste bags.	1	3	6	10
Electric wall clock.	-	-	-	2
Telephone.	1	1	1	-
Full size stapler 20 (sheet capacity, with staples)	1	2	5	8
Desktop tape dispensers (with Tape)	1	2	5	8

Business telephone system for three lines with ten handsets, intercom capability, and one speaker phone for conference table.	-	-	-	1
Mini refrigerator - 3.2 c.f. min.	1	1	1	1
Hot and cold water dispensing unit. Disposable cups and bottled water shall be supplied by the Contractor for the duration of the project.	1	1	1	1
Microwave, 1.2 c.f. , 1000W min.	1	1	1	1
Fire extinguishers - provide and install type and *number to meet applicable State and local codes for size of office indicated, including a fire extinguisher suitable for use on a computer terminal fire.	*	*	*	*
Electric pencil sharpeners.	1	2	2	2
Electronic office type printing calculators capable of addition, subtraction, multiplication and division with memory and a supply of printing paper.	1	1	2	4
Small Multi-Function Laser Printer/Copier/Scanner/Fax combination unit, network capable, as specified below under Computer Hardware and Software.	1	1		
Large Multi-Function Laser Printer/Copier/Scanner/Fax combination unit, network capable, as specified below under Computer Hardware and Software.			1	1
Computer System as specified below under Computer Hardware and Software.	2	3	5	8
Digital Camera as specified below under Computer Hardware and Software.	1	1	3	3
Video Projector as specified below under Computer Hardware and Software.	-	-	-	1
Smart Board as specified below under Computer Hardware and Software.	-	-	-	1
Infrared Thermometer, including annual third party certified calibration, case, and cleaning wipes.	1	1	1	2
Rain Gauge.	1	1	1	1
Concrete Curing Box as specified below under Concrete Testing Equipment.	1	1	1	1
Concrete Air Meter and accessories as specified below under Concrete Testing Equipment as specified below. Contractor shall provide third party calibration on a quarterly basis.	1	1	1	1
Concrete Slump Cone and accessories as specified below under Concrete Testing Equipment.	1	1	1	1
First Aid Kit	1	1	1	1

The furnishings and equipment required herein shall remain the property of the Contractor. Any supplies required to maintain or operate the above listed equipment or furnishings shall be provided by the Contractor for the duration of the project.

Computer Hardware and Software: Computer System(s), Digital Camera(s), Multifunction Laser Printer/Copier/Scanner/Fax, Video Projectors and Smart Board(s) as well as associated hardware and software, must meet the requirements of this specification as well as the latest minimum specifications posted, as of the project advertising date, at Departments web site http://www.ct.gov/dot/cwp/view.asp?a=1410&q=563904

The Contractor shall provide the Engineer, Computer Systems, Software and Related Equipment, with support and documentation.

The Contractor shall provide a licensed copy of the required software on original media and/or download information, as well as license keys. The Contractor shall also supply instructions, manuals, maintenance for future version upgrades, and customer support services offered by each software producer, for the duration of the Contract. **The peripheral required software in excess of the operating system normally installed by the computer vendor should not be preinstalled. The installation will be performed by CTDOT OIS.**

The Contractor is responsible for service and repairs to all hardware. All repairs must be performed with-in 48 hours. If the repairs require more than a 48 hours then a replacement must be provided.

The Contractor shall provide all supplies, paper, maintenance, and repairs (including labor and parts) for the computers, laptops, printers, copiers, and fax machines and other facilities required by this specification for the duration of the Contract.

Within 10 calendar days after the signing of the Contract but before ordering/purchasing the Computer System(s), Software, Digital Camera(s), Multifunction Laser Printer/Copier/Scanner/Fax, Video Projectors and Smart Board(s) as well as associated hardware and software, the Contractor must submit a copy of their proposed order(s) with catalog cuts and specifications to the Administering CTDOT District for review and approval. The Computer System(s), Software, Multifunction Laser Printer/Copier/Scanner/Fax, and Smart Board(s) will be initially reviewed by the CTDOT District personnel and forwarded to the CTDOT OIS for final approval. The digital cameras will be reviewed and approved by the CTDOT District. The Contractor shall not purchase the equipment or software until the Administering CTDOT District informs them that the proposed equipment and software is approved. The Contractor will be solely responsible for the costs of any equipment or software purchased without approval.

Prior to delivery of the computer hardware and software the Contractor should create or procure any backup media necessary to restore the operating system and any preloaded software provided (Example: the Windows software, driver disks and others necessary to reinstall the operating system.). At the conclusion of the project the Department must wipe

the hard drive for security purposes. The Department will not be responsible for returning the computer to the out of the box state. It will be the responsibility of the Contractor.

After the approval of the hardware and software, the Contractor must speak to one of the representatives at the CTDOT OIS by calling 860-594-3500, Option #1, a minimum of 2 working days in advance of the proposed delivery.

The approved computer system(s) including all hardware and software shall be delivered at the same time (all software and hardware necessary for the complete installation of the latest versions of the software listed). If all items are not delivered at the same time or the CTDOT OIS has not been contacted 2 working days in advance the delivery cannot be accepted. Digital Cameras should be delivered to the District.

All software, hardware and licenses provided shall be clearly labeled, specifying the (1) Project No., (2) Contractor Name, (3) Project Engineer's Name and (4) Project Engineer's Phone No., and shall be delivered to the CTDOT OIS , 2710 Berlin Turnpike, Newington, CT, where it will be configured and prepared for field installation. Installation will then be coordinated with CTDOT District and Project personnel and the computer system specified will be stationed in the Department's Project field office.

Once the Contract has been completed, the hardware and software will remain the property of the Contractor. Prior to the return of any computer(s) to the Contractor, field personnel will coordinate with the CTDOT OIS personnel for the hard-drive wiping and removal of Department owned equipment, software, data, and associated equipment.

First Aid Kit: The Contractor shall supply a first aid kit adequate for the number of personnel expected based on the size of the field office specified and shall keep the first aid kit stocked for the duration that the field office is in service.

Concrete Testing Equipment: If the Contract includes items that require compressive strength cylinders for concrete, in accordance with the Schedule of Minimum Testing Requirements for Sampling Materials for Test, the Contractor shall provide the following. All testing equipment will remain the property of the Contractor at the completion of the project.

A) Concrete Cylinder Curing Box – meeting the requirements of Section 6.12 of the Standard Specifications.

B) Air Meter – The air meter provided shall be in good working order and meet the requirements of AASHTO T 152.

C) Slump Cone Mold – Slump cone, base plate, and tamping rod shall be provided in like-new condition and meet the requirements of AASHTO T119, Standard Test Method for Slump of Hydraulic-Cement Concrete.

Insurance Policy: The Contractor shall provide a separate insurance policy, with no deductible, in the minimum amount of five thousand dollars ($5,000) in order to insure all State-owned data equipment and supplies used in the office against all losses. The Contractor shall be named insured on that policy, and the Department shall be an additional named insured on the policy. These losses shall include, but not be limited to: theft, fire, and physical damage. The Department will be responsible for all maintenance costs of Department owned computer hardware. In the event of loss, the Contractor shall provide replacement equipment in accordance with current Department equipment specifications, within seven days of notice of the loss. If the Contractor is unable to provide the required replacement equipment within seven days, the Department may provide replacement equipment and deduct the cost of the equipment from monies due or which may become due the Contractor under the Contract or under any other contract. The Contractor's financial liability under this paragraph shall be limited to the amount of the insurance coverage required by this paragraph. If the cost of equipment replacement required by this paragraph should exceed the required amount of the insurance coverage, the Department will reimburse the Contractor for replacement costs exceeding the amount of the required coverage.

Maintenance: During the occupancy by the Department, the Contractor shall maintain all facilities and furnishings provided under the above requirements, and shall maintain and keep the office quarters clean through the use of weekly professional cleaning to include, but not limited to, washing & waxing floors, cleaning restrooms, removal of trash, etc. Exterior areas shall be mowed and clean of debris. A trash receptacle (dumpster) with weekly pickup (trash removal) shall be provided. Snow removal, sanding and salting of all parking, walkway, and entrance ways areas shall be accomplished during a storm if on a workday during work hours, immediately after a storm and prior to the start of a workday. If snow removal, salting and sanding are not completed by the specified time, the State will provide the service and all costs incurred will be deducted from the next payment estimate.

Method of Measurement: The furnishing and maintenance of the construction field office will be measured for payment by the number of calendar months that the office is in place and in operation, rounded up to the nearest month.

There will not be any price adjustment due to any change in the minimum computer hardware and software requirements.

Basis of Payment: The furnishing and maintenance of the Construction Field Office will be paid for at the Contract unit price per month for “Construction Field Office, (Type),” which price shall include all material, equipment, labor, service contracts, licenses, software, repair or replacement of hardware and software, related supplies, utility services, parking area, external illumination, trash removal, snow and ice removal, and work incidental thereto, as well as any other costs to provide requirements of this specified this specification.

Pay Item	Pay Unit
Construction Field Office, (Type)	Month

ITEM #0970006A - TRAFFICPERSON (MUNICIPAL POLICE OFFICER)
ITEM #0970007A - TRAFFICPERSON (UNIFORMED FLAGGER)

Delete SECTION 9.70 TRAFFICPERSON *in its entirety and replace with the following:*

9.70.01—Description: Under this item the Contractor shall provide the services of Trafficpersons of the type and number, and for such periods, as the Engineer approves for the control and direction of vehicular traffic and pedestrians. Traffic persons requested solely for the contractor's operational needs will not be approved for payment.

9.70.03—Construction Methods: Prior to the start of operations on the project requiring the use of Trafficpersons, a meeting will be held with the Contractor, Trafficperson agency or firm, Engineer, and State Police, if applicable, to review the Trafficperson operations, lines of responsibility, and operating guidelines which will be used on the project. A copy of the municipality's billing rates for Municipal Police Officers and vehicles, if applicable, will be provided to the Engineer prior to start of work.

On a weekly basis, the Contractor shall inform the Engineer of their scheduled operations for the following week and the number of Trafficpersons requested. The Engineer shall review this schedule and approve the type and number of Trafficpersons required. In the event of an unplanned, emergency, or short term operation, the Engineer may approve the temporary use of properly clothed persons for traffic control until such time as an authorized Trafficperson may be obtained. In no case shall this temporary use exceed 8 hours for any particular operation.

If the Contractor changes or cancels any scheduled operations without prior notice of same as required by the agency providing the Trafficpersons, and such that Trafficperson services are no longer required, the Contractor will be responsible for payment at no cost to the Department of any show-up cost for any Trafficperson not used because of the change. Exceptions, as approved by the Engineer, may be granted for adverse weather conditions and unforeseeable causes beyond the control and without the fault or negligence of the Contractor.

Trafficpersons assigned to a work site are to only take direction from the Engineer.

Trafficpersons shall wear a high visibility safety garment that complies with OSHA, MUTCD, ASTM Standards and the safety garment shall have the words "Traffic Control" clearly visible on the front and rear panels (minimum letter size 2 inches (50 millimeters). Worn/faded safety garments that are no longer highly visible shall not be used. The Engineer shall direct the replacement of any worn/faded garment at no cost to the State.

A Trafficperson shall assist in implementing the traffic control specified in the Maintenance and Protection of Traffic contained elsewhere in these specifications or as directed by the Engineer. Any situation requiring a Trafficperson to operate in a manner contrary to the Maintenance and Protection of Traffic specification shall be authorized in writing by the Engineer.

Trafficpersons shall consist of the following types:

1. Uniformed Law Enforcement Personnel: Law enforcement personnel shall wear the high visibility safety garment provided by their law enforcement agency. If no high visibility safety garment is provided, the Contractor shall provide the law enforcement personnel with a garment meeting the requirements stated for the Uniformed Flaggers' garment.

Law Enforcement Personnel may be also be used to conduct motor vehicle enforcement operations in and around work areas as directed and approved by the Engineer.

Municipal Police Officers: Uniformed Municipal Police Officers shall be sworn Municipal Police Officers or Uniformed Constables who perform criminal law enforcement duties from the Municipality in which the project is located. Their services will also include an official Municipal Police vehicle when requested by the Engineer. Uniformed Municipal Police Officers will be used on non-limited access highways. If Uniformed Municipal Police Officers are unavailable, other Trafficpersons may be used when authorized in writing by the Engineer.
Uniformed Municipal Police Officers and requested Municipal Police vehicles will be used at such locations and for such periods as the Engineer deems necessary to control traffic operations and promote increased safety to motorists through the construction sites.

2. Uniformed Flagger: Uniformed Flaggers shall be persons who have successfully completed flagger training by the American Traffic Safety Services Association (ATSSA), National Safety Council (NSC) or other programs approved by the Engineer. A copy of the Flagger's training certificate shall be provided to the Engineer before the Flagger performs any work on the project. Uniformed Flaggers shall conform to Chapter 6E, Flagger Control, in the Manual of Uniformed Traffic Control Devices (MUTCD) and shall wear high-visibility safety apparel, use a STOP/SLOW paddle that is at least 18 inches (450 millimeters) in width with letters at least 6 inches (150 millimeters) high. The paddle shall be mounted on a pole of sufficient length to be 6 feet (1.8 meters) above the ground as measured from the bottom of the sign.

Uniformed Flaggers will only be used on non-limited access highways to control traffic operations when authorized in writing by the Engineer.

9.70.04—Method of Measurement: Services of Trafficpersons will be measured for payment by the actual number of hours for each person rendering services approved by the Engineer. These services shall include, however, only such trafficpersons as are employed within the limits of construction, project right of way of the project or along detours authorized by the Engineer to assist the motoring public through the construction work zone. Services for continued use of a detour or bypass beyond the limitations approved by the Engineer, for movement of construction vehicles and equipment, or at locations where traffic is unnecessarily restricted by the Contractor's method of operation, will not be measured for payment.

Trafficpersons shall not work more than twelve hours in any one 24 hour period. In case such services are required for more than twelve hours, additional Trafficpersons shall be furnished and

measured for payment. In cases where the Trafficperson is an employee on the Contractor's payroll, payment under the item "Trafficperson (Uniformed Flagger)" will be made only for those hours when the Contractor's employee is performing Trafficperson services.

Travel time will not be measured for payment for services provided by Uniformed Municipal Police Officers or Uniformed Flaggers.

Mileage fees associated with Trafficperson services will not be measured for payment.

Safety garments and STOP/SLOW paddles will not be measured for payment.

9.70.05—Basis of Payment: Trafficpersons will be paid in accordance with the schedule described herein.

There will be no direct payment for safety garments or STOP/SLOW paddles. All costs associated with furnishing safety garments and STOP/SLOW paddles shall be considered included in the general cost of the item.

1. **Uniformed Law Enforcement Personnel**: The sum of money shown on the Estimate and in the itemized proposal as "Estimated Cost" for this work will be considered the bid price even though payment will be made as described below. The estimated cost figure is not to be altered in any manner by the bidder. Should the bidder alter the amount shown, the altered figures will be disregarded and the original price will be used to determine the total amount for the contract.

The Department will pay the Contractor its actual costs for "Trafficperson (Municipal Police Officer)" plus an additional 5% as reimbursement for the Contractor's administrative expense in connection with the services provided. The 5% markup will be paid when the Engineer receives cancelled check(s) or receipted invoice(s) as proof of payment from the Contractor.

The invoice must include a breakdown of each officer's actual hours of work and actual rate applied. Mileage fees associated with Trafficperson services are not reimbursable expenses and are not to be included in the billing invoice. The use of a municipal police vehicle authorized by the Engineer will be paid at the actual rate charged by the municipality. Upon receipt of the invoice from the municipality, the Contractor shall forward a copy to the Engineer. The invoice will be reviewed and approved by the Engineer prior to any payments. The rate charged by the municipality for use of a uniformed municipal police officer and/or a municipal police vehicle shall not be greater than the rate it normally charges others for similar services.

2. **Uniformed Flagger:** Uniformed flaggers will be paid for at the contract unit price per hour for "Trafficperson (Uniformed Flagger)", which price shall include all compensation, insurance benefits and any other cost or liability incidental to the furnishing of the trafficpersons ordered.

Pay Item	Pay Unit
Trafficperson (Municipal Police Officer)	est.
Trafficperson (Uniformed Flagger)	Hr.

ITEM #0971001A - MAINTENANCE AND PROTECTION OF TRAFFIC

Article 9.71.01 – Description is supplemented by the following:

The Contractor shall maintain and protect traffic as described by the following and as limited in the Special Provision "Prosecution and Progress":

Route 99 (Main Street)

The Contractor shall maintain and protect a minimum of one lane of traffic in each direction, each lane on a paved travel path not less than 11 feet in width.

Excepted therefrom will be those periods, during the allowable periods, when the Contractor is actively working, at which time the Contractor shall maintain and protect at least an alternating one-way traffic operation, on a paved travel path not less than 11 feet in width. The length of the alternating one-way traffic operation shall not exceed 300 feet and there shall be no more than one alternating one-way traffic operation within the project limits without prior approval of the Engineer.

The Contractor will be allowed to close Route 99 to through traffic and detour traffic as shown on the Detour Plans contained in the contract plans.

All Other Roadways

The Contractor shall maintain and protect a minimum of one lane of traffic in each direction, each lane on a paved travel path not less than 11 feet in width.

Excepted therefrom will be those periods, during the allowable periods, when the Contractor is actively working, at which time the Contractor shall maintain and protect at least an alternating one-way traffic operation, on a paved travel path not less than 11 feet in width. The length of the alternating one-way traffic operation shall not exceed 300 feet and there shall be no more than one alternating one-way traffic operation within the project limits without prior approval of the Engineer.

Commercial and Residential Driveways

The Contractor shall maintain access to and egress from all commercial and residential driveways throughout the project limits. The Contractor will be allowed to close said driveways to perform the required work during those periods when the businesses are closed, unless permission is granted from the business owner to close the driveway during business hours. If a temporary closure of a residential driveway is necessary, the Contractor shall coordinate with the owner to determine the time period of the closure.

Article 9.71.03 - Construction Method is supplemented as follows:

General

The Contractor is required to delineate any raised structures within the travel lanes, so that the structures are visible day and night, unless there are specific contract plans and provisions to temporarily lower these structures prior to the completion of work.

The Contractor shall schedule operations so that pavement removal and roadway resurfacing shall be completed full width across a roadway (bridge) section by the end of a workday (work night), or as directed by the Engineer.

When the installation of all intermediate courses of bituminous concrete pavement is completed for the entire roadway, the Contractor shall install the final course of bituminous concrete pavement.

When the Contractor is excavating adjacent to the roadway, the Contractor shall provide a 3-foot shoulder between the work area and travel lanes, with traffic drums spaced every 50 feet. At the end of the workday, if the vertical drop-off exceeds 3 inches, the Contractor shall provide a temporary traversable slope of 4:1 or flatter that is acceptable to the Engineer.

If applicable, when an existing sign is removed, it shall be either relocated or replaced by a new sign during the same working day.

The Contractor shall not store any material on-site which would present a safety hazard to motorists or pedestrians (e.g. fixed object or obstruct sight lines).

The field installation of a signing pattern shall constitute interference with existing traffic operations and shall not be allowed, except during the allowable periods.

Existing Signing

The Contractor shall maintain all existing overhead and side-mounted signs throughout the project limits during the duration of the project. The Contractor shall temporarily relocate signs and sign supports as many times as deemed necessary, and install temporary sign supports if necessary and as directed by the Engineer.

Requirements for Winter

The Contractor shall schedule a meeting with representatives from the Department including the offices of Maintenance and Traffic, and the Town/City to determine what interim traffic control measures the Contractor shall accomplish for the winter to provide safety to the motorists and permit adequate snow removal procedures. This meeting shall be held prior to October 31 of each year and will include, but not be limited to, discussion of the status and schedule of the

following items: lane and shoulder widths, pavement restoration, traffic signal work, pavement markings, and signing.

Signing Patterns

The Contractor shall erect and maintain all signing patterns in accordance with the traffic control plans contained herein. Proper distances between advance warning signs and proper taper lengths are mandatory.

Pavement Markings

The Contractor will be responsible for the furnishing of all pavement markings, either temporary or permanent. The Contractor shall repaint roadways as directed by the engineer. This work will be paid for under the appropriate pavement marking items.

The Contractor is alerted that all pavement markings must be in place by the end of the work day for any roadway to be opened on that day.

TRAFFIC CONTROL DURING CONSTRUCTION OPERATIONS

The following guidelines shall assist field personnel in determining when and what type of traffic control patterns to use for various situations. These guidelines shall provide for the safe and efficient movement of traffic through work zones and enhance the safety of work forces in the work area.

TRAFFIC CONTROL PATTERNS

Traffic control patterns shall be used when a work operation requires that all or part of any vehicle or work area protrudes onto any part of a travel lane or shoulder. For each situation, the installation of traffic control devices shall be based on the following:

Speed and volume of traffic
Duration of operation
Exposure to hazards

Traffic control patterns shall be uniform, neat and orderly so as to command respect from the motorist.

In the case of a horizontal or vertical sight restriction in advance of the work area, the traffic control pattern shall be extended to provide adequate sight distance for approaching traffic.

If a lane reduction taper is required to shift traffic, the entire length of the taper should be installed on a tangent section of roadway so that the entire taper area can be seen by the motorist.

Any existing signs that are in conflict with the traffic control patterns shall be removed, covered, or turned so that they are not readable by oncoming traffic.

When installing a traffic control pattern, a Buffer Area should be provided and this area shall be free of equipment, workers, materials and parked vehicles.

Typical traffic control plans 19 through 25 may be used for moving operations such as line striping, pot hole patching, mowing, or sweeping when it is necessary for equipment to occupy a travel lane.

Traffic control patterns will not be required when vehicles are on an emergency patrol type activity or when a short duration stop is made and the equipment can be contained within the shoulder. Flashing lights and appropriate trafficperson shall be used when required.

Although each situation must be dealt with individually, conformity with the typical traffic control plans contained herein is required. In a situation not adequately covered by the typical traffic control plans, the Contractor must contact the Engineer for assistance prior to setting up a traffic control pattern.

PLACEMENT OF SIGNS

Signs must be placed in such a position to allow motorists the opportunity to reduce their speed prior to the work area. Signs shall be installed on the same side of the roadway as the work area. On multi-lane divided highways, advance warning signs shall be installed on both sides of the highway. On directional roadways (on-ramps, off-ramps, one-way roads), where the sight distance to signs is restricted, these signs should be installed on both sides of the roadway.

ALLOWABLE ADJUSTMENT OF SIGNS AND DEVICES SHOWN ON THE TRAFFIC CONTROL PLANS

The traffic control plans contained herein show the location and spacing of signs and devices under ideal conditions. Signs and devices should be installed as shown on these plans whenever possible.

The proper application of the traffic control plans and installation of traffic control devices depends on actual field conditions.

Adjustments to the traffic control plans shall be made only at the direction of the Engineer to improve the visibility of the signs and devices and to better control traffic operations. Adjustments to the traffic control plans shall be based on safety of work forces and motorists, abutting property requirements, driveways, side roads, and the vertical and horizontal curvature of the roadway.

The Engineer may require that the traffic control pattern be located significantly in advance of the work area to provide better sight line to the signing and safer traffic operations through the work zone.

Table I indicates the minimum taper length required for a lane closure based on the posted speed limit of the roadway. These taper lengths shall only be used when the recommended taper lengths shown on the traffic control plans cannot be achieved.

TABLE I – MINIMUM TAPER LENGTHS

POSTED SPEED LIMIT MILES PER HOUR	MINIMUM TAPER LENGTH IN FEET FOR A SINGLE LANE CLOSURE
30 OR LESS	180
35	250
40	320
45	540
50	600
55	660
65	780

SECTION 1. WORK ZONE SAFETY MEETINGS

1.a) Prior to the commencement of work, a work zone safety meeting will be conducted with representatives of DOT Construction, Connecticut State Police (Local Barracks), Municipal Police, the Contractor (Project Superintendent) and the Traffic Control Subcontractor (if different than the prime Contractor) to review the traffic operations, lines of responsibility, and operating guidelines which will be used on the project. Other work zone safety meetings during the course of the project should be scheduled as needed.

1.b) A Work Zone Safety Meeting Agenda shall be developed and used at the meeting to outline the anticipated traffic control issues during the construction of this project. Any issues that can't be resolved at these meetings will be brought to the attention of the District Engineer and the Office of Construction. The agenda should include:

- Review Project scope of work and time
- Review Section 1.08, Prosecution and Progress
- Review Section 9.70, Trafficpersons
- Review Section 9.71, Maintenance and Protection of Traffic
- Review Contractor's schedule and method of operations.
- Review areas of special concern: ramps, turning roadways, medians, lane drops, etc.
- Open discussion of work zone questions and issues
- Discussion of review and approval process for changes in contract requirements as they relate to work zone areas

SECTION 2. GENERAL

2.a) If the required minimum number of signs and equipment (i.e. one High Mounted Internally Illuminated Flashing Arrow for each lane closed, two TMAs, Changeable Message Sign, etc.) are not available; the traffic control pattern shall not be installed.

2.b) The Contractor shall have back-up equipment (TMAs, High Mounted Internally Illuminated Flashing Arrow, Changeable Message Sign, construction signs, cones/drums, etc.) available at all times in case of mechanical failures, etc. The only exception to this is in the case of sudden equipment breakdowns in which the pattern may be installed but the Contractor must provide replacement equipment within 24 hours.

2.c) Failure of the Contractor to have the required minimum number of signs, personnel and equipment, which results in the pattern not being installed, shall not be a reason for a time extension or claim for loss time.

2.d) In cases of legitimate differences of opinion between the Contractor and the Inspection staff, the Inspection staff shall err on the side of safety. The matter shall be brought to the District Office for resolution immediately or, in the case of work after regular business hours, on the next business day.

SECTION 3. INSTALLING AND REMOVING TRAFFIC CONTROL PATTERNS

3.a) Lane Closures shall be installed beginning with the advanced warning signs and proceeding forward toward the work area.

3.b) Lane Closures shall be removed in the reverse order, beginning at the work area, or end of the traffic control pattern, and proceeding back toward the advanced warning signs.

3.c) Stopping traffic may be allowed:

- As per the contract for such activities as blasting, steel erection, etc.

3.d) Rolling roadblocks or stoppages of traffic are not permitted for the installation or removal of traffic control patterns.

3.e) The Contractor must adhere to using the proper signs, placing the signs correctly, and ensuring the proper spacing of signs.

3.f) Additional devices are required on entrance ramps, exit ramps, and intersecting roads to warn and/or move traffic into the proper travelpath prior to merging/exiting with/from the main line traffic. This shall be completed before installing the mainline pattern past the ramp or intersecting roadway.

3.g) Prior to installing a pattern, any conflicting existing signs shall be covered with an opaque material. Once the pattern is removed, the existing signs shall be uncovered.

3.h) On limited access roadways, workers are prohibited from crossing the travel lanes to install and remove signs or other devices on the opposite side of the roadway. Any signs or devices on the opposite side of the roadway shall be installed and removed separately.

SECTION 4. USE OF HIGH MOUNTED INTERNALLY ILLUMINATED FLASHING ARROW

4.a) On limited access roadways, one Flashing Arrow shall be used for each lane that is closed. The Flashing Arrow shall be installed concurrently with the installation of the traffic control pattern and its placement shall be as shown on the traffic control plan. For multiple lane closures, one Flashing Arrow is required for each lane closed. If conditions warrant, additional Flashing Arrows should be employed (i.e.: curves, major ramps, etc.).

4.b) On non-limited access roadways, the use of a Flashing Arrow for lane closures is optional. The roadway geometry, sight line distance, and traffic volume should be considered in the decision to use the Flashing Arrow.

4.c) The Flashing Arrow shall not be used on two lane, two-way roadways for temporary alternating one-way traffic operations.

4.d) The Flashing Arrow board display shall be in the "arrow" mode for lane closure tapers and in the "caution" mode (four corners) for shoulder work, blocking the shoulder, or roadside work near the shoulder. The Flashing Arrow shall be in the "caution" mode when it is positioned in the closed lane.

4.e) The Flashing Arrow shall not be used on a multi-lane roadway to laterally shift all lanes of traffic, because unnecessary lane changing may result.

SECTION 5. USE OF TRUCK MOUNTED IMPACT ATTENUATOR VEHICLES (TMAs)

5.a) For lane closures on limited access roadways, a minimum of two TMAs shall be used to install and remove traffic control patterns. If two TMAs are not available, the pattern shall not be installed.

5.b) On non-limited access roadways, the use of TMAs to install and remove patterns closing a lane(s) is optional. The roadway geometry, sight line distance, and traffic volume should be considered in the decision to utilize the TMAs.

5.c) Generally, to establish the advance and transition signing, one TMA shall be placed on the shoulder and the second TMA shall be approximately 1,000 feet ahead blocking the lane. The flashing arrow board mounted on the TMA should be in the "flashing arrow" mode when taking the lane. The sign truck and workers should be immediately ahead of the second TMA. In no case shall the TMA be used as the sign truck or a work truck. Once the transition is in place, the TMAs shall travel in the closed lane until all Changeable Message Signs, signs, Flashing Arrows, and cones/drums are installed. The flashing arrow board mounted on the TMA should be in the "caution" mode when traveling in the closed lane.

5.d) A TMA shall be placed prior to the first work area in the pattern. If there are multiple work areas within the same pattern, then additional TMAs shall be positioned at each additional work area as needed. The flashing arrow board mounted on the TMA should be in the "caution" mode when in the closed lane.

5.e) TMAs shall be positioned a sufficient distance prior to the workers or equipment being protected to allow for appropriate vehicle roll-ahead in the event that the TMA is hit, but not so far that an errant vehicle could travel around the TMA and into the work area. For additional placement and use details, refer to the specification entitled "Type 'D' Portable Impact Attenuation System". Some operations, such as paving and concrete repairs, do not allow for placement of the TMA(s) within the specified distances. In these situations,

the TMA(s) should be placed at the beginning of the work area and shall be advanced as the paving or concrete operations proceed.

5.f) TMAs should be paid in accordance with how the unit is utilized. When it is used as a TMA and is in the proper location as specified, and then it should be paid at the specified hourly rate for "Type 'D' Portable Impact Attenuation System". When the TMA is used as a Flashing Arrow, it should be paid at the daily rate for "High Mounted Internally Illuminated Flashing Arrow". If a TMA is used to install and remove a pattern and then is used as a Flashing Arrow, the unit should be paid as a "Type 'D' Portable Impact Attenuation System" for the hours used to install and remove the pattern, typically 2 hours (1 hour to install and 1 hour to remove), and is also paid for the day as a "High Mounted Internally Illuminated Flashing Arrow".

SECTION 6. USE OF TRAFFIC DRUMS AND TRAFFIC CONES

6.a) Traffic drums shall be used for taper channelization on limited-access roadways, ramps, and turning roadways and to delineate raised catch basins and other hazards.

6.b) Traffic drums shall be used in place of traffic cones in traffic control patterns that are in effect for more than a 36-hour duration.

6.c) Traffic Cones less than 42 inches in height shall not be used on limited-access roadways or on non-limited access roadways with a posted speed limit of 45 mph and above.

6.d) Typical spacing of traffic drums and/or cones shown on the Traffic Control Plans in the Contract are maximum spacings and may be reduced to meet actual field conditions as required.

SECTION 7. USE OF (REMOTE CONTROLLED) CHANGEABLE MESSAGE SIGNS (CMS)

7.a) For lane closures on limited access roadways, one CMS shall be used in advance of the traffic control pattern. Prior to installing the pattern, the CMS shall be installed and in operation, displaying the appropriate lane closure information (i.e.: Left Lane Closed - Merge Right). The CMS shall be positioned ½ - 1 mile ahead of the lane closure taper. If the nearest Exit ramp is greater than the specified ½ - 1 mile distance, than an additional CMS shall be positioned a sufficient distance ahead of the Exit ramp to alert motorists to the work and therefore offer them an opportunity to take the exit.

7.b) CMS should not be installed within 1000 feet of an existing CMS.

7.c) On non-limited access roadways, the use of CMS for lane closures is optional. The roadway geometry, sight line distance, and traffic volume should be considered in the decision to use the CMS.

7.d) The advance CMS is typically placed off the right shoulder, 5 feet from the edge of pavement. In areas where the CMS cannot be placed beyond the edge of pavement, it may be placed on the paved shoulder with a minimum of five (5) traffic drums placed in a taper in front of it to delineate its position. The advance CMS shall be adequately protected if it is used for a continuous duration of 36 hours or more.

7.e) When the CMS are no longer required, they should be removed from the clear zone and have the display screen cleared and turned 90° away from the roadway.

7.f) The CMS generally should not be used for generic messages (ex: Road Work Ahead, Bump Ahead, Gravel Road, etc.).

7.g) The CMS should be used for specific situations that need to command the motorist's attention which cannot be conveyed with standard construction signs (Examples include: Exit 34 Closed Sat/Sun - Use Exit 35, All Lanes Closed - Use Shoulder, Workers on Road - Slow Down).

7.h) Messages that need to be displayed for long periods of time, such as during stage construction, should be displayed with construction signs. For special signs, please coordinate with the Office of Construction and the Division of Traffic Engineering for the proper layout/dimensions required.

7.i) The messages that are allowed on the CMS are as follows:

Message No.	Frame 1	Frame 2	Message No.	Frame 1	Frame 2
1	LEFT LANE CLOSED	MERGE RIGHT	9	LANES CLOSED AHEAD	REDUCE SPEED
2	2 LEFT LANES CLOSED	MERGE RIGHT	10	LANES CLOSED AHEAD	USE CAUTION
3	LEFT LANE CLOSED	REDUCE SPEED	11	WORKERS ON ROAD	REDUCE SPEED
4	2 LEFT LANES CLOSED	REDUCE SPEED	12	WORKERS ON ROAD	SLOW DOWN
5	RIGHT LANE CLOSED	MERGE LEFT	13	EXIT XX CLOSED	USE EXIT YY
6	2 RIGHT LANES CLOSED	MERGE LEFT	14	EXIT XX CLOSED USE YY	FOLLOW DETOUR
7	RIGHT LANE CLOSED	REDUCE SPEED	15	2 LANES SHIFT AHEAD	USE CAUTION
8	2 RIGHT LANES CLOSED	REDUCE SPEED	16	3 LANES SHIFT AHEAD	USE CAUTION

For any other message(s), approval must be received from the Office of Construction prior to their use. No more than two (2) displays shall be used within any message cycle.

SERIES 16 SIGNS

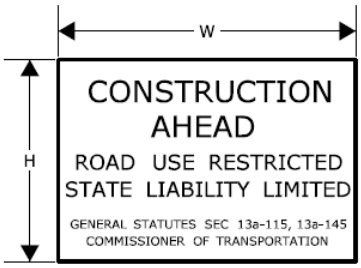

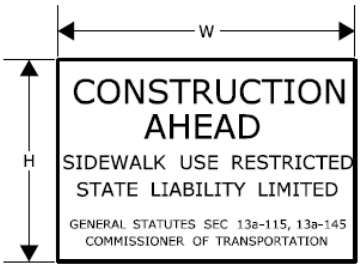

		W H
16-E	80-1605	84" x 60"
16-H	80-1608	60" x 42"
16-M	80-1613	30" x 24"

		W H
16-S	80-1619	48" x 30"

THE 16-S SIGN SHALL BE USED ON ALL PROJECTS THAT REQUIRE SIDEWALK RECONSTRUCTION OR RESTRICT PEDESTRIAN TRAVEL ON AN EXISTING SIDEWALK.

SERIES 16 SIGNS SHALL BE INSTALLED IN ADVANCE OF THE TRAFFIC CONTROL PATTERNS TO ALLOW MOTORISTS THE OPPORTUNITY TO AVOID A WORK ZONE. SERIES 16 SIGNS SHALL BE INSTALLED ON ANY MAJOR INTERSECTING ROADWAYS THAT APPROACH THE WORK ZONE. ON LIMITED-ACCESS HIGHWAYS, THESE SIGNS SHALL BE LOCATED IN ADVANCE OF THE NEAREST UPSTREAM EXIT RAMP AND ON ANY ENTRANCE RAMPS PRIOR TO OR WITHIN THE WORK ZONE LIMITS.

THE LOCATION OF SERIES 16 SIGNS CAN BE FOUND ELSEWHERE IN THE PLANS OR INSTALLED AS DIRECTED BY THE ENGINEER.

SIGNS 16-E AND 16-H SHALL BE POST-MOUNTED.

SIGN 16-E SHALL BE USED ON ALL EXPRESSWAYS.

SIGN 16-H SHALL BE USED ON ALL RAMPS, OTHER STATE ROADWAYS, AND MAJOR TOWN/CITY ROADWAYS.

SIGN 16-M SHALL BE USED ON OTHER TOWN ROADWAYS.

REGULATORY SIGN "ROAD WORK AHEAD, FINES DOUBLED"

THE REGULATORY SIGN "ROAD WORK AHEAD FINES DOUBLED" SHALL BE INSTALLED FOR ALL WORK ZONES THAT OCCUR ON ANY STATE HIGHWAY IN CONNECTICUT WHERE THERE ARE WORKERS ON THE HIGHWAY OR WHEN THERE IS OTHER THAN EXISTING TRAFFIC OPERATIONS.

THE "ROAD WORK AHEAD FINES DOUBLED" REGULATORY SIGN SHALL BE PLACED AFTER THE SERIES 16 SIGN AND IN ADVANCE OF THE "ROAD WORK AHEAD" SIGN.

31-1906

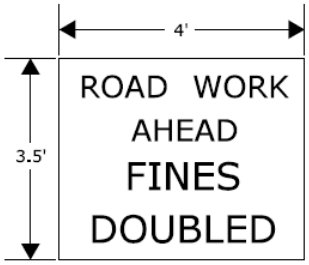

"END ROAD WORK" SIGN

THE LAST SIGN IN THE PATTERN MUST BE THE "END ROAD WORK" SIGN.

80-9612

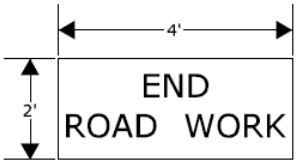

SCALE: NONE

CONSTRUCTION TRAFFIC CONTROL PLAN

REQUIRED SIGNS

CONNECTICUT DEPARTMENT OF TRANSPORTATION
BUREAU OF ENGINEERING & CONSTRUCTION

APPROVED Charles S. Harlow 2012.06.05 11:35:43-04'00'
PRINCIPAL ENGINEER

NOTES FOR TRAFFIC CONTROL PLANS

1. IF A TRAFFIC STOPPAGE OCCURS IN ADVANCE OF SIGN (A), THEN AN ADDITIONAL SIGN (A) SHALL BE INSTALLED IN ADVANCE OF THE STOPPAGE.

2. SIGNS (AA), (A), AND (D) SHOULD BE OMITTED WHEN THESE SIGNS HAVE ALREADY BEEN INSTALLED TO DESIGNATE A LARGER WORK ZONE THAN THE WORK ZONE THAT IS ENCOMPASSED ON THIS PLAN.

3. SEE TABLE 1 FOR ADJUSTMENT OF TAPERS IF NECESSARY.

4. IF THIS PLAN REMAINS IN CONTINUOUS OPERATION FOR MORE THAN 36 HOURS, THEN TRAFFIC DRUMS SHALL BE USED IN PLACE OF TRAFFIC CONES.

5. ANY LEGAL SPEED LIMIT SIGNS WITHIN THE LIMITS OF A ROADWAY / LANE CLOSURE AREA SHALL BE COVERED WITH AN OPAQUE MATERIAL WHILE THE CLOSURE IS IN EFFECT, AND UNCOVERED WHEN THE ROADWAY / LANE CLOSURE IS RE-OPENED TO ALL LANES OF TRAFFIC.

6. IF THIS PLAN REMAINS IN CONTINUOUS OPERATION FOR MORE THAN 36 HOURS, THEN ANY EXISTING CONFLICTING PAVEMENT MARKINGS SHALL BE ERADICATED OR COVERED, AND TEMPORARY PAVEMENT MARKINGS THAT DELINEATE THE PROPER TRAVELPATHS SHALL BE INSTALLED.

7. DISTANCES BETWEEN SIGNS IN THE ADVANCE WARNING AREA MAY BE REDUCED TO 100' ON LOW-SPEED URBAN ROADS (SPEED LIMIT < 40 MPH).

8. IF THIS PLAN IS TO REMAIN IN OPERATION DURING THE HOURS OF DARKNESS, INSTALL BARRICADE WARNING LIGHTS - HIGH INTENSITY ON ALL POST-MOUNTED DIAMOND SIGNS IN THE ADVANCE WARNING AREA.

9. A CHANGEABLE MESSAGE SIGN SHALL BE INSTALLED ONE HALF TO ONE MILE IN ADVANCE OF THE LANE CLOSURE TAPER.

10 SIGN (P) SHALL BE MOUNTED A MINIMUM OF 7 FEET FROM THE PAVEMENT SURFACE TO THE BOTTOM OF THE SIGN.

TABLE 1 - MINIMUM TAPER LENGTHS

POSTED SPEED LIMIT (MILES PER HOUR)	MINIMUM TAPER LENGTH FOR A SINGLE LANE CLOSURE
30 OR LESS	180' (55m)
35	250' (75m)
40	320' (100m)
45	540' (165m)
50	600' (180m)
55	660' (200m)
65	780' (240m)

METRIC CONVERSION CHART (1" = 25mm)

ENGLISH	METRIC	ENGLISH	METRIC	ENGLISH	METRIC
12"	300mm	42"	1050mm	72"	1800mm
18"	450mm	48"	1200mm	78"	1950mm
24"	600mm	54"	1350mm	84"	2100mm
30"	750mm	60"	1500mm	90"	2250mm
36"	900mm	66"	1650mm	96"	2400mm

SCALE: NONE

CONSTRUCTION TRAFFIC CONTROL PLAN

NOTES

CONNECTICUT DEPARTMENT OF TRANSPORTATION
BUREAU OF ENGINEERING & CONSTRUCTION

APPROVED Charles S. Harlow 2012.06.05 15:50:35-04'00'
PRINCIPAL ENGINEER

WORK IN TRAVEL LANE AND SHOULDER
TWO LANE HIGHWAY
ALTERNATING ONE-WAY TRAFFIC OPERATIONS

SIGN FACE
108 SQ. FT (MIN.)

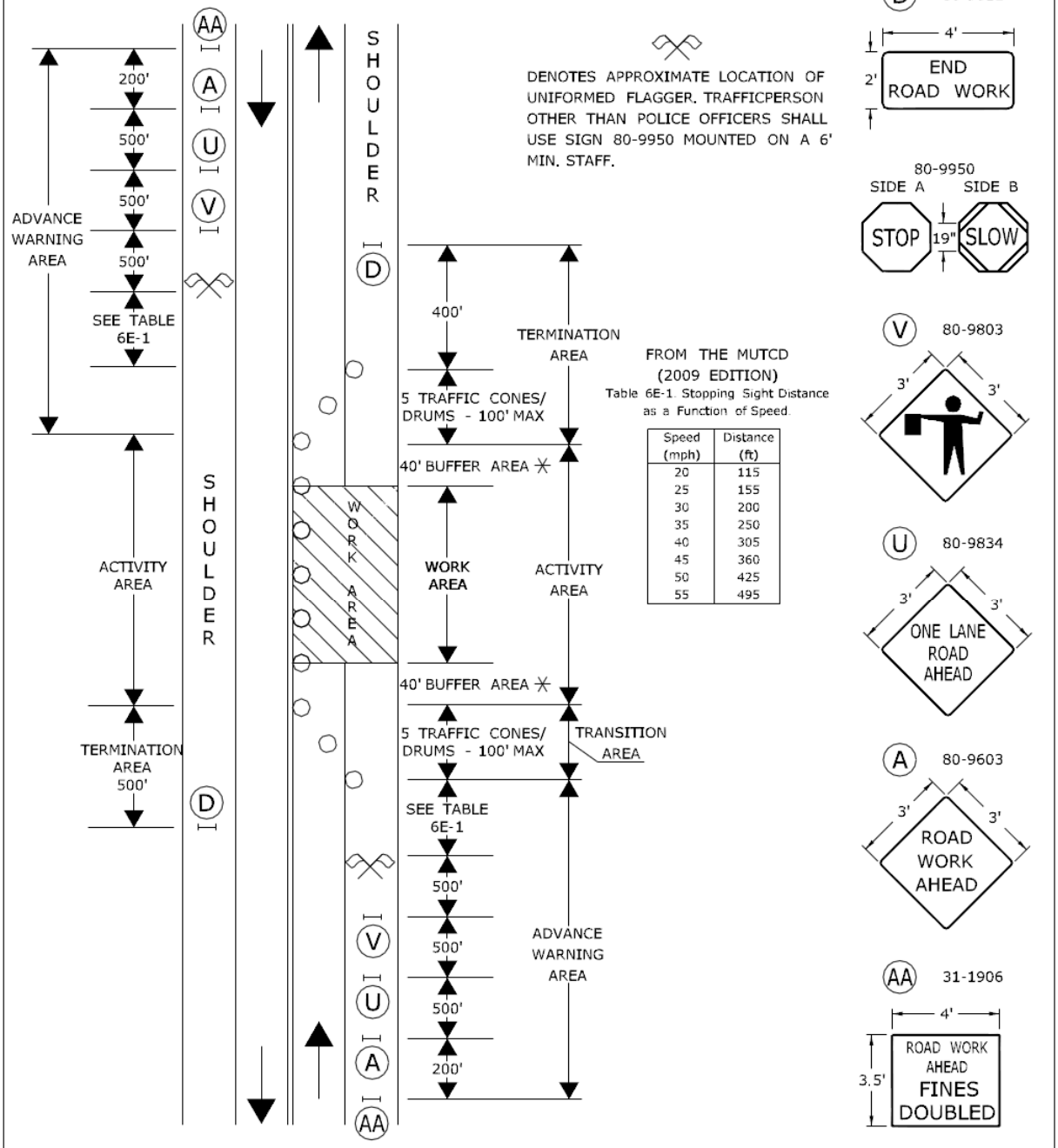

FROM THE MUTCD
(2009 EDITION)
Table 6E-1. Stopping Sight Distance as a Function of Speed

Speed (mph)	Distance (ft)
20	115
25	155
30	200
35	250
40	305
45	360
50	425
55	495

TRAFFIC CONE **OR** TRAFFIC DRUM
OPTIONAL TRAFFIC DRUM PORTABLE SIGN SUPPORT
HIGH MOUNTED INTERNALLY ILLUMINATED FLASHING ARROW

SCALE: NONE

CONSTRUCTION TRAFFIC CONTROL PLAN

PLAN 13 - SHEET 1 OF 2

SEE NOTES 1, 2, 4, 6, 7, 8

CONNECTICUT DEPARTMENT OF TRANSPORTATION
BUREAU OF ENGINEERING & CONSTRUCTION

APPROVED Charles S. Harlow 2012.06.05 15:55:23-04'00'
PRINCIPAL ENGINEER

WORK IN TRAVEL LANE AND SHOULDER
TWO LANE HIGHWAY
ALTERNATING ONE-WAY TRAFFIC OPERATIONS

SIGN FACE
108 SQ. FT (MIN.)

HAND SIGNAL METHODS TO BE USED BY UNIFORMED FLAGGERS

THE FOLLOWING METHODS FROM SECTION 6E.07, FLAGGER PROCEDURES, IN THE "MANUAL ON UNIFORM TRAFFIC CONTROL DEVICES," SHALL BE USED BY UNIFORMED FLAGGERS WHEN DIRECTING TRAFFIC THROUGH A WORK AREA. THE STOP/SLOW SIGN PADDLE (SIGN NO. 80-9950) SHOWN ON THE TRAFFIC STANDARD SHEET TR-1220 01 ENTITLED, "SIGNS FOR CONSTRUCTION AND PERMIT OPERATIONS" SHALL BE USED.

A. TO STOP TRAFFIC

TO STOP ROAD USERS, THE FLAGGER SHALL FACE ROAD USERS AND AIM THE STOP PADDLE FACE TOWARD ROAD USERS IN A STATIONARY POSITION WITH THE ARM EXTENDED HORIZONTALLY AWAY FROM THE BODY. THE FREE ARM SHALL BE HELD WITH THE PALM OF THE HAND ABOVE SHOULDER LEVEL TOWARD APPROACHING TRAFFIC.

B. TO DIRECT TRAFFIC TO PROCEED

TO DIRECT STOPPED ROAD USERS TO PROCEED, THE FLAGGER SHALL FACE ROAD USERS WITH THE SLOW PADDLE FACE AIMED TOWARD ROAD USERS IN A STATIONARY POSITION WITH THE ARM EXTENDED HORIZONTALLY AWAY FROM THE BODY. THE FLAGGER SHALL MOTION WITH THE FREE HAND FOR ROAD USERS TO PROCEED.

C. TO ALERT OR SLOW TRAFFIC

TO ALERT OR SLOW TRAFFIC, THE FLAGGER SHALL FACE ROAD USERS WITH THE SLOW PADDLE FACE AIMED TOWARD ROAD USERS IN A STATIONARY POSITION WITH THE ARM EXTENDED HORIZONTALLY AWAY FROM THE BODY. TO FURTHER ALERT OR SLOW TRAFFIC, THE FLAGGER HOLDING THE SLOW PADDLE FACE TOWARD ROAD USERS MAY MOTION UP AND DOWN WITH THE FREE HAND, PALM DOWN.

◯ TRAFFIC CONE **OR** TRAFFIC DRUM
✳ OPTIONAL ⊗ TRAFFIC DRUM ⊢⊣ PORTABLE SIGN SUPPORT
⟵ HIGH MOUNTED INTERNALLY ILLUMINATED FLASHING ARROW

SCALE: NONE

CONSTRUCTION TRAFFIC CONTROL PLAN
PLAN 13 - SHEET 2 OF 2
SEE NOTES 1, 2, 4, 6, 7, 8

CONNECTICUT DEPARTMENT OF TRANSPORTATION
BUREAU OF ENGINEERING & CONSTRUCTION

APPROVED Charles S. Harlow 2012.06.05 15:55:45-04'00'
PRINCIPAL ENGINEER

WORK IN SHOULDER - TWO LANE HIGHWAY

SIGN FACE
71 SQ. FT (MIN.)

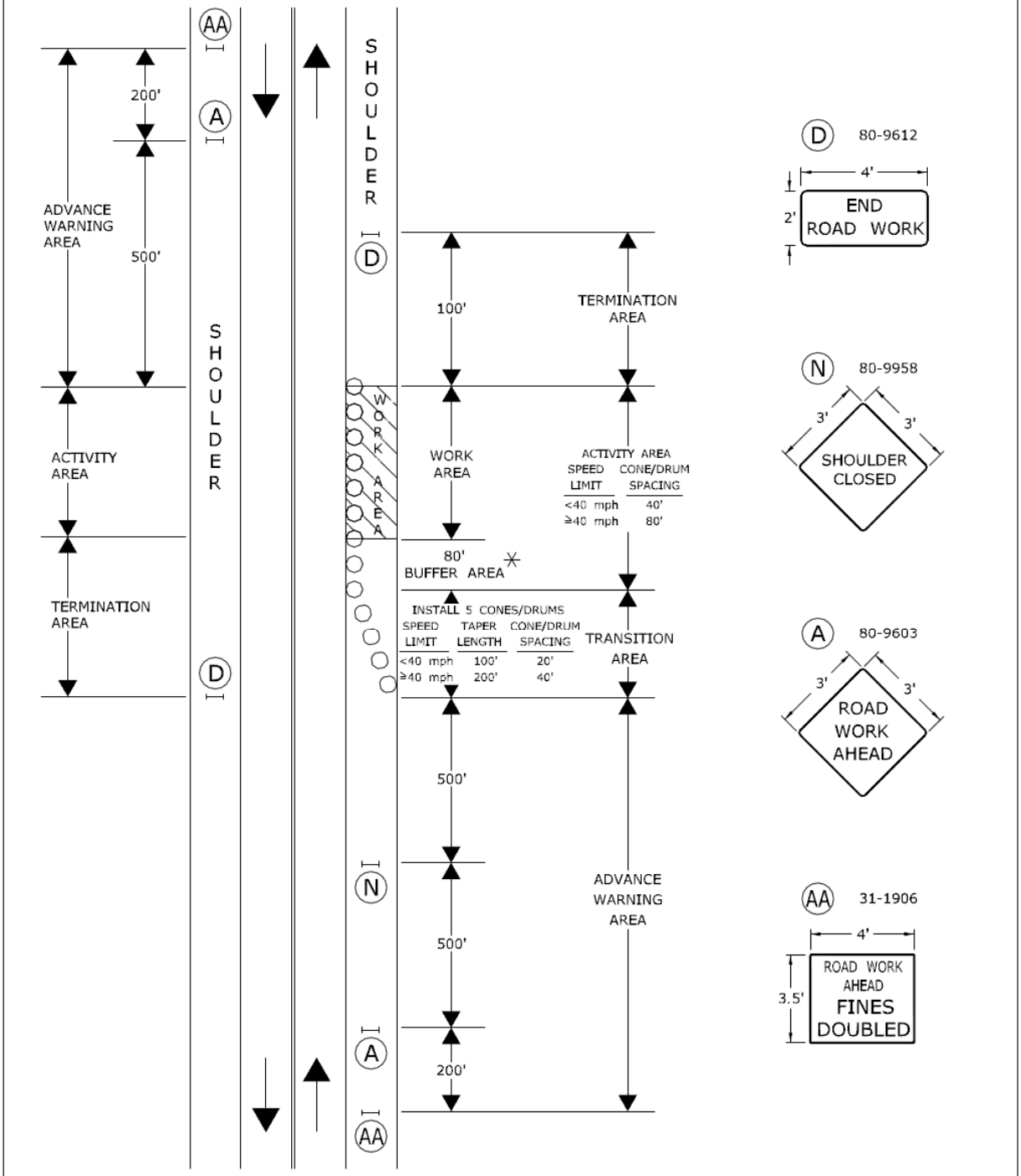

TRAFFIC CONE **OR** TRAFFIC DRUM
OPTIONAL TRAFFIC DRUM PORTABLE SIGN SUPPORT
HIGH MOUNTED INTERNALLY ILLUMINATED FLASHING ARROW

SCALE: NONE

CONSTRUCTION TRAFFIC CONTROL PLAN

PLAN 14

SEE NOTES 1, 2, 4, 7, 8

CONNECTICUT DEPARTMENT OF TRANSPORTATION
BUREAU OF ENGINEERING & CONSTRUCTION

APPROVED Charles S. Harlow 2012.06.05 15:56:09-04'00'
PRINCIPAL ENGINEER

WORK IN TRAVEL LANE AND SHOULDER
TWO LANE HIGHWAY

SIGN FACE
62 SQ. FT (MIN.)

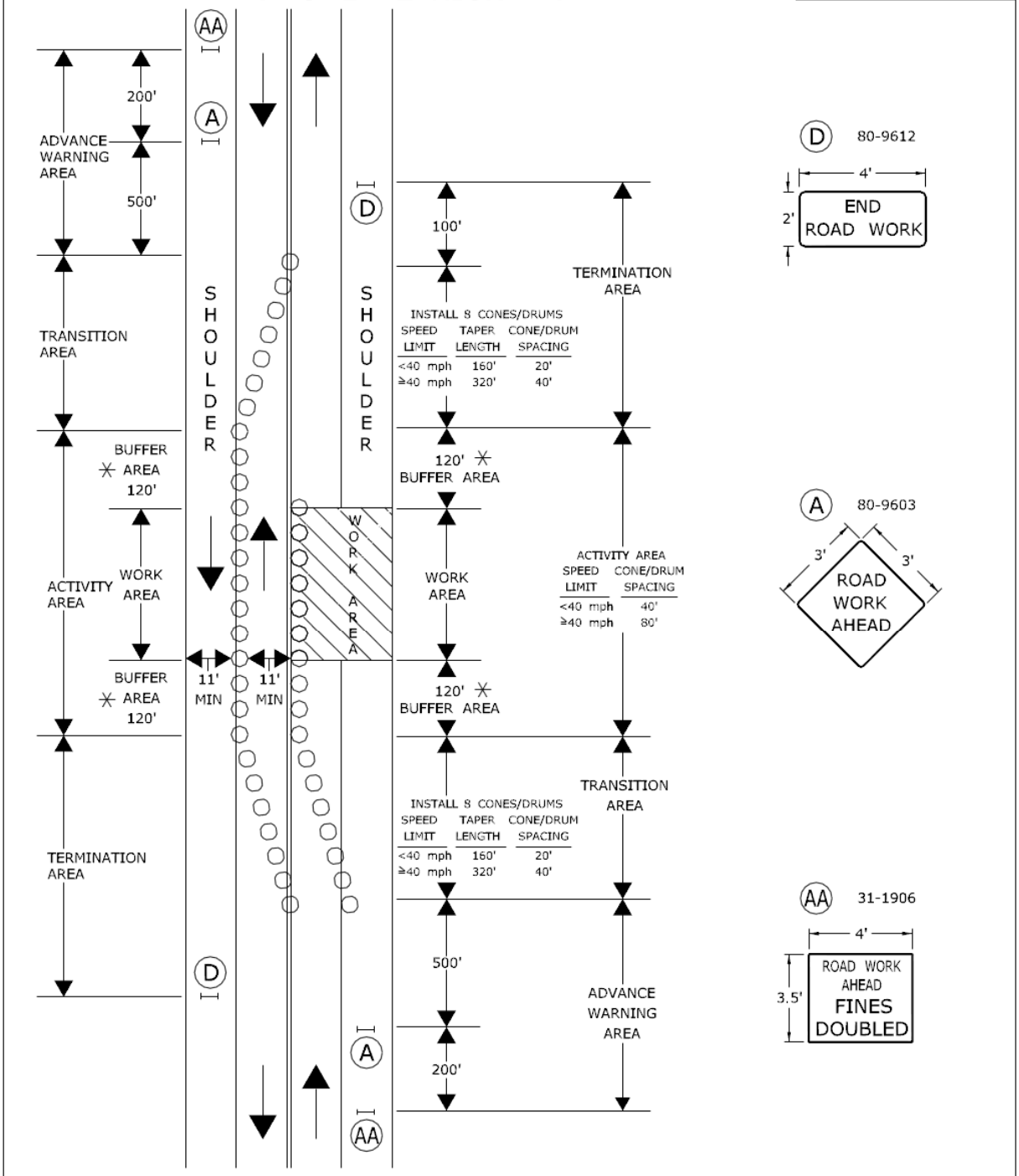

TRAFFIC CONE **OR** TRAFFIC DRUM
OPTIONAL TRAFFIC DRUM PORTABLE SIGN SUPPORT
HIGH MOUNTED INTERNALLY ILLUMINATED FLASHING ARROW

SCALE: NONE

CONSTRUCTION TRAFFIC CONTROL PLAN
PLAN 15
SEE NOTES 1, 2, 4, 6, 7, 8

CONNECTICUT DEPARTMENT OF TRANSPORTATION
BUREAU OF ENGINEERING & CONSTRUCTION

APPROVED Charles S. Harlow 2012.06.05 15:56:29-04'00'
PRINCIPAL ENGINEER

Article 9.71.05 – Basis of Payment is supplemented by the following:

The temporary relocation of signs and supports, and the furnishing, installation and removal of any temporary supports shall be paid for under the item “Maintenance and Protection of Traffic”. Temporary overhead sign supports and foundations shall be paid for under the appropriate item(s).

The cost of furnishing, installing, and removing the material for the 4H:1V traversable slope shall be paid for under the item “Maintenance and Protection of Traffic.”

ITEM #1131002A - REMOTE CONTROLLED CHANGEABLE MESSAGE SIGN

Description: Work under this item shall include furnishing and maintaining a trailer-mounted, "Changeable Message Sign", "Remote Controlled Changeable Message Sign", "Changeable Message Sign with Radar", or "Remote Controlled Changeable Message Sign with Radar" whichever is applicable, at the locations indicated on the plans or as directed by the Engineer.

Materials: The full matrix, internally illuminated variable message sign shall consist of a LED, fiber optic, lamp matrix, or hybrid magnetically operated matrix – LED message board; and a computer operated interface, all mounted on a towable, heavy duty trailer.

The sign shall have a minimum horizontal dimension of 115 inches and rotate a complete 360 degrees atop the lift mechanism.

In the raised position, the bottom of the sign shall be at least 7 feet above the roadway. The messages displayed shall be visible from a distance of 1/2 mile and be clearly legible from a distance of 900 feet during both the day and night.

The lighting system shall be controlled both manually and by a photocell for automatic sign dimming during nighttime use.

The sign shall be capable of storing a minimum of 100 preprogrammed messages and be able to display any one of those messages upon call from the trailer mounted terminal and/or through the cellular telephone hookup for the remote controlled sign.

The sign shall be a full matrix sign that is able to display messages composed of any combination of alphanumeric text, punctuation symbols, and graphic images (notwithstanding NTCIP limitations). The display shall be capable of producing arrow functions. Full- matrix displays shall allow the use of graphics, traffic safety symbols and various character heights.

Standard messages shall be displayed in a three-line message format with 8 characters per line. The letter height shall not be less than 18 inches.

The sign shall utilize yellow green for the display with a black background. Each matrix shall have a minimum size of 6 x 9 pixels. Each pixel shall utilize a minimum of four high output yellow green LEDs or equivalent light source. The LEDs or light source shall have a minimum 1.4 candela luminance intensity, 22 degrees viewing angle, and wavelength of 590 (+/- 3) nanometers.

For hybrid magnetically operated matrix – LED matrix, each pixel shall have one single shutter faced with yellow green retro-reflective sheeting with a minimum of four high output yellow green LEDs or equivalent light source. The hybrid magnetically operated matrix – LED matrix sign shall be capable of operating in three display modes; shutter only, LED only, and both LED

and shutter. These modes shall be automatically controlled by a photocell for day and night conditions and also capable of being manually controlled through the software.

The sign shall be controlled by an on-board computer. The sign shall automatically change to a preselected default message upon failure. That default message shall remain on display until the problem is corrected.

The sign shall include all necessary controls, including, but not limited to, personal computer, keyboard or alphanumeric hand-held keyboard, and software. The sign shall interface with PCs, cellular phones, and radar speed detection devices as required.

Controls shall be furnished for raising and lowering the message board, aligning the message board and, for solar powered units, a read-out of the battery bank charge.

Power shall be provided by a self-contained solar maintained power source or a diesel engine driven generator. Hardware for connection to a 110-volt power source shall also be provided.

Solar powered signs shall display programmed messages with the solar panel disconnected, in full night conditions, for a minimum of 30 consecutive days.

Remote Controlled Changeable Message Signs shall include one (1) industrial-grade cellular telephone and be equipped with a modem to control the sign and a security system to prevent unauthorized access. The security system shall allow access only through use of a code or password unique to that sign. If the proper code or password is not entered within 60 seconds of initial telephone contact, the call will be terminated. Remote control for the Remote Controlled Changeable Message Sign shall be by cellular telephone and touch tone modem decoder.

The radar equipped signs shall include a high-speed electronic control module (ECM-X), Radar SI transceiver, signal processing board and radar logging software.

The radar software will operate the sign in four modes:
1) The sign will display words “YOUR SPEED” followed by the speed (2 digits). The display will repeat the message as long as vehicles are detected. The sign will blank when no vehicles are present.
2) The sign will display a series of up to six messages (programmed by the user) when a preset speed (programmed by the user) is exceeded. The sign will blank when no vehicles are present.
3) Will perform like mode #2 with the addition of displaying the actual speed with it.
4) The sign will work as a standard Changeable Message Sign or Remote Controlled Changeable Message Sign with no radar.

Construction Methods: The Contractor shall furnish, place, operate, maintain and relocate the sign as required. When the sign is no longer required, it shall be removed and become the property of the Contractor. The cellular telephone required for the Remote Controlled Changeable Message Sign shall be provided to the Engineer for his use, and subsequently returned to the Contractor.

When the sign is not in use, it shall either be turned off with a blank display or turned from view.

Any signs that are missing, damaged, defaced or improperly functioning so that they are not effective, as determined by the Engineer and in accordance with the ATSSA guidelines contained in "Quality Standards for Work Zone Traffic Control Devices," shall be replaced by the Contractor at no cost to the State.

Method of Measurement: This work will be measured for payment for each "Changeable Message Sign", "Remote Controlled Changeable Message Sign", "Changeable Message Sign with Radar", or "Remote Controlled Changeable Message Sign with Radar", whichever applies, furnished and installed, for the number of calendar days that the sign is in place and in operation, measured to the nearest day. When a sign is in operation for less than a day, such a period of time shall be considered to be a full day regardless of actual time in operation.

Basis of Payment: This work will be paid for at the Contract unit price per day for each "Changeable Message Sign", "Remote Controlled Changeable Message Sign", "Changeable Message Sign with Radar", or "Remote Controlled Changeable Message Sign with Radar" which price shall include placing, maintaining, relocating and removing the sign and its appurtenances and all material, labor, tools and equipment incidental thereto. Additionally, for the "Remote Controlled Changeable Message Sign", or "Remote Controlled Changeable Message Sign with Radar", the cellular telephone service and telephone charges shall be included.

Pay Item	Pay Unit
Changeable Message Sign	Day
Remote Controlled Changeable Message Sign	Day
Changeable Message Sign with Radar	Day
Remote Controlled Changeable Message Sign with Radar	Day

ITEM #1210101A - 4" (100 mm) WHITE EPOXY RESIN PAVEMENT MARKINGS

ITEM #1210102A - 4" (100 mm) YELLOW EPOXY RESIN PAVEMENT MARKINGS

SECTION 12.10 – EPOXY RESIN PAVEMENT MARKINGS, SYMBOLS AND LEGENDS is amended as follows:

*Delete "**SYMBOLS AND LEGENDS**" from the title of the section.*

SECTION 12.10.03 – Construction Methods is amended as follows:

*Delete the entire sections titled "**3. Performance and Warranty:**" and "**WARRANTY:**" and replace them with the following:*

3. Initial Performance: The retroreflectivity of the markings applied must be measured by the Contractor three (3) to fourteen (14) days after installation. A Certified Test Report (CTR), in accordance with Section 1.06.07, must be submitted to the Engineer no later than ten (10) days after the measurements are taken using the procedures and equipment detailed below:

Test Lots - The following test lots shall be randomly selected by the Engineer to represent the line markings applied:

Table 3.1: Line Test Lots

Length of line	Number of Lots	Length of Test Lot
< 1.0 mi. (1.5 km)	1	1000 ft. (300 m)
≥1.0 mi. (1.5 km)	1 per 1.0 mi. (1.5 km)	1000 ft. (300 m)

Measurement Equipment and Procedure

Portable Retroreflectometer

1. Skip line measurements shall be obtained for every other stripe, taking no more than two readings per stripe with readings no closer than 20 in. (0.5 m) from either end of the marking.
2. Solid line test lots shall be divided into ten sub-lots of 100 ft. (30 m) length and measurements obtained at one randomly select location within each sublot.
3. For symbols and legends, 10 percent of each type shall be measured by obtaining five (5) measurements at random locations on the symbol or legend.

4. The Apparatus and Measurements shall be made in accordance with ASTM E1710 (Standard Test Method for Measurement of Retroreflective Pavement Marking Materials with CEN-Prescribed Geometry Using a Portable Retroreflectometer) and evaluated in accordance with ASTM D7585/D7585M (Standard Practice for Evaluating Retroreflective Pavement Markings Using Portable Hand-Operated Instruments).

Mobile Retroreflectometer

1. Calibration of the instruments shall be in accordance with the manufacturer's instructions.
2. Retroreflectivity shall be measured in a manner proposed by the Contractor and approved by the Engineer. The basis of approval of the test method will be conformance to a recognized standard test method or provisional standard test method.

The measurements shall be obtained when the pavement surface is clean and dry and shall be reported in millicandellas per square foot per foot candle - mcd/ft^2/fc (millicandelas per square meter per lux (mcd/m^2/lux)). Measurements shall be obtained sequentially in the direction of traffic flow.

Additional Contents of Certified Test Report

The CTR shall also list:

- Project and Route number
- Geographical location of the test site(s), including distance from the nearest reference point.
- Manufacturer and model of retroreflectometer used.
- Most recent calibration date for equipment used.
- Grand Average and standard deviation of the retroreflectivity readings for each line, symbol or legend.

Initial Performance:

In order to be accepted, all epoxy resin pavement markings must meet the following minimum retroreflectivity reading requirement:

White Epoxy: minimum retroreflectivity reading of 400 mcd/ft^2/fc (mcd/m^2/lux)
Yellow Epoxy: minimum retroreflectivity reading of 325 mcd/ft^2/fc (mcd/m^2/lux)

At the discretion of the Engineer, the Contractor shall replace, at its expense, such amount of lines, symbols and legends that the grand average reading falls below the minimum value for retro-reflectivity. The Engineer will determine the areas and lines to be replaced. The cost of replacement shall include all materials, equipment, labor and work incidental thereto.

ITEM #1301083A - 10” DUCTILE IRON PIPE (WATER MAIN)

Description:

Ductile Iron Pipe - The Contractor shall furnish and install ductile iron pipe, of the sizes indicated, and all the fittings and appurtenances to the lines and grades shown on the Contract Drawings, complete as shown, specified or directed, including but not limited to; pressure reducing valves, vaults, bends, restraint, blow off assemblies, gate/butterfly valves, air valves, sterilization fittings, tapping sleeves, tapping gates, DI casing sleeve, casing spacers, gate boxes, tees, thrust blocks and anchors, transporting materials, digging test pits, the clearing, trenching, disposing of unused excavated materials, removing and disposing of sections of the present water mains and concrete anchors, removing abandoned water gate boxes and water manholes, furnishing installing and field testing the pipelines complete with lacings and harnessing, concrete anchor / thrust blocks and utility identification tape, all trenching, rock removal, refilling trenches, filter fabric, furnishing additional material for refilling, trench compaction / testing, temporary and permanent surface restoration, miscellaneous grading, sheeting, bracing, pumping and all incidental work where required, to the specifications and details of the District, except as otherwise herein provided for.

Reference to “District” in this Item refers to “The Metropolitan District”.

Materials: All materials used shall be from manufacturers and models as specified in the MDC “Approved Materials List for Water Main Installations” unless otherwise approved by the Engineer

Ductile Iron Pipe - Submittals: Six (6) sets of the manufacturer's literature and/or shop drawings for the materials of this section shall be submitted for approval. The Contractor shall furnish detailed drawings as follows and no work shall be fabricated until they have been approved by the Engineer:

1. Dimensions and general details for typical length of pipe.

2. Detail of joint between pipes for both push-on and restrained joints together with installation instructions.

3. Dimensions and general details for all fittings including joint details for both mechanical and restrained joints.

4. Location plans or lists showing number of pipes and fittings and other such information as needed for installation.

Prior to pipe-laying, the Contractor shall dig test pits where the new pipe connects to the present water main to ascertain the location, elevation and cross sectional dimensions of the present mains.

Pipe Specifications: All ductile iron pipe with push-on joints shall be the 60-42-10 grade cast in revolving molds in full accord with the following American National Standard, except for details for the joints and other modifications stated herein: "Ductile Iron Pipe, Centrifugally Cast in Metal Molds or Sand-Lined Molds, for Water or Other Liquids".

ANSI/AWWA C151/A 21.51, furnished in 18-foot or 20-foot lengths. Push-on joints for such pipe shall be in accordance with ANSI/AWWA C111/A 21.11.

All requirements of the American National Standards Institute Specifications will be rigidly enforced and the foundry shall submit regularly to the Engineer, single copies of the report of tensile tests and low temperature impact tests as required in Section 51-12 and 51-13 of the ANSI/AWWA C151/A 21.51.

The Contractor shall submit to the Engineer a certified statement that the inspection and all of the specified tests have been made and met as required in Section 511.4.2 of ANSI/AWWA C151/ A21.51.

The ductile iron pipe to be furnished under this Contract shall conform to the following dimensions:

Size (Inches)	Thickness (Inches)	Thickness (Class)
4	0.35	54
10	0.41	54
16	0.46	54

Where shown, specified or ordered, the pipe shall have push-on joints of the type which employs a single elongated, grooved rubber gasket to affect a watertight joint seal. The joints shall conform to the latest American National Standard for "Rubber Gasket Joints for Ductile Iron and Gray Iron Pressure Pipe and Fittings", ANSI/AWWA C111/A21.11, except as otherwise specified herein. The rubber gaskets shall be manufactured from high quality rubber satisfactory to the Engineer and shall be similar to the gaskets used in the Tyton joint as manufactured by the United States Pipe and Foundry Company or the Fastite joint as manufactured by the American Cast Iron Pipe Company or the Grip-Tite joint as manufactured by Griffin Pipe Products Co. or approved equal.

Where shown, specified or ordered, the pipe shall have restrained joints of a type which employs a single elongated, rubber gasket to affect a watertight joint seal. The joints shall conform in general to ANSI/AWWA C111/A21.11. The rubber gaskets shall be manufactured from high quality rubber satisfactory to the Engineer. The restrained joint pipe shall be as manufactured by McWane, Super Lock, TR Flex, or approved equal.

The grooved rubber gaskets and joint lubricant shall be furnished with the pipe and shall be considered included in the price bid per linear feet of pipe. The gasket shall be plainly identified as to pipe size and packaged in a suitable and satisfactory manner for shipment.

Each pipe shall have cast or stamped on it the maker's name or mark, the year in which the pipe is cast, and the letters "DI" or "DUCTILE" as required by the American National Standards Institute Specifications. The weight and thickness class shall be painted on each pipe, as required by the American National Standards Institute Specifications, and a record of weight for each pipe before the application of a lining or coating shall be submitted to the Engineer.

Fitting Specifications: All ductile iron fittings to be furnished under this Contract shall conform to the American National Standard for "Ductile-Iron and Gray-Iron Fittings, 3-inch through 48-inch, for Water and other Liquids", ANSI/AWWA C110/A21.10. In addition to the marking required by the American National Standards Institute Specifications, the year of casting shall be cast on all fittings. Single copies of the results of tests required by the ANSI/AWWA C110-A21.10 shall be submitted to the Engineer.

Bolt holes in the mechanical joint bells of all fittings shall straddle the vertical centerline of the fitting (fitting laying in horizontal position).

Unless otherwise shown, specified or ordered, all fittings shall be mechanical joint (MJ).

Joint Accessories: All joint accessories shall be furnished with each pipe and fitting and shall be plainly identified as to pipe size. A certified statement that all required tests on the joint accessories have been made and met as specified shall be submitted to the Engineer.

Lining and Coating: All pipe and fittings, except sleeves, caps and plugs shall be lined with cement mortar in accord with the American National Standard for "Cement Mortar Lining for Ductile-Iron Pipe and Fittings for Water", ANSI/AWWA C104/A21.4. However, linings with thickness twice those specified in Section 4-10.1 shall be furnished. Thickness determinations, in accord with Section 4-9, shall be made on at least one fitting of each type.

All pipe and fittings, including steel sleeves, caps, plugs, tees, bends and reducers, shall be coated inside and outside with an approved bituminous material, neither sufficiently soft to flow when exposed to the summer sun, nor brittle enough to crack and scale off when exposed to temperatures below freezing.

Coating may be applied by painting, dipping or spraying, but in no case are the pipe fittings or the coating material to be heated to a high enough temperature to be detrimental to the cement lining. In addition, the coating of the interior shall conform to the requirements of ANSI/AWWA C104/A21.1.

The Contractor shall submit to the Engineer a certified statement that the inspection and all of the specified tests have been made and met.

THE FOLLOWING ARE ACCEPTABLE PIPE MANUFACTURERS:

Atlantic States Pipe (McWane)
United States Pipe & Foundry Co.
Griffin Pipe Products, Inc.
Clow Corp. (McWane)
ACIPCO

Inspection: All pipe and fittings shall be subject to inspection by the Engineer after delivery to the job site and may also be subject to inspection at the foundry by a representative of the District.

Harnessing Specifications: Eyebolts and lacing rods shall be of A-36 steel as manufactured by Star National Products, Columbus, Ohio or approved equal. All components shall be hot -dipped galvanized.

Retainer glands for mechanical joints shall conform to ANSI/AWWA C111/A21.11 and the following additional requirements:

1. All retainer glands shall be ductile iron and all retaining devices shall be heat treated ductile iron.

2. All retainer glands shall have a minimum rated working pressure of 250 psi.

The retainer glands shall be Megalug Series 1100 as manufactured by EBAA Iron Sales, Inc. Eastland, Texas or approved equal.

Trench Refill: Trench refill materials shall meet the following requirements:

Native Backfill: Native backfill shall consist of granular soil excavated on site meeting the approval of the Engineer. Materials shall be of such a nature that they will form a stable dense fill. Materials shall not contain stones larger than 6-inch, vegetation, masses of roots, individual roots more than 12-feet long or more than ½-inch in diameter, trash, clays, or plastic fines. Organic matter shall not exceed two percent (2%). Non-plastic fines (silts) shall not exceed 20 percent (20%).

Bank Gravel: Bank gravel shall conform to the requirements of Article M.02.01-2, CDOT Form 816.

Crushed Stone: Crushed stone shall conform to the requirements of Article M.02.01-1 Grading A, CDOT Form 816 and Sub article M.02.02-2(a), CDOT Form 816, for loss on abrasion.

Granular Base: Granular base shall conform to the requirements of Article M.02.03, Grading "C", CTDOT Form 816.
Sand: Sand shall conform to the requirements of Sub article M.11.04c, CDOT Form 816.

Ductile Iron Pipe and Fittings: Refer to the "Ductile Iron Pipe (Water Main)" specification.

Gate Valve, Extension Stem and Gate Box: Refer to MDC Detail.

Concrete anchor/ Thrust blocks: Anchors and thrust blocks shall be Class "A" concrete conforming to Article M.03.01.

Harnessing: Refer to MDC Detail.

Filter fabric: Fabric shall conform to Article M.08.01-26.

Utility Identification Tape: The tape shall be 4-inches wide, designed to withstand extended underground exposure, colored blue and be durably imprinted with an appropriate warning indicating the presence of the buried pipe.

Construction Methods:

Transporting and Distributing Pipe: The Contractor shall transport the pipe and fittings from the place of manufacture, shall secure all permits which may be necessary, and comply with the requirements of the Connecticut Bureau of Highways, Cities and Towns, concerning heavy transporting over State, City and Town highways.

During loading, transportation and unloading, more than ordinary care shall be taken to prevent injury to the pipes. Such work shall be done with each section of the pipe under full control at all times and under no condition shall a pipe be dropped on the ground. Pipes shall be placed on sand beds or other methods may be employed to avoid chances of pipe being frozen to the ground surface.

In distributing the pipe in the field, as permitted, each piece shall be placed as near as possible to the point where it is to be installed and faced in the proper direction. In case any pipe received damage from handling or other cause and made unacceptable to the Engineer, it shall be replaced with a new pipe at the expense of the Contractor. The Contractor is cautioned that State, City, or Town authorities may not permit storing pipe, etc., within street or highway limits.

Clearing Trees and Bushes: No trees within streets and highways, or adjacent to the normal trench therein, shall be damaged or removed. In streets and highways where there is no permanent paving, the Contractor shall, unless otherwise directed, remove and dispose of only those trees, bushes or shrubs required for construction and approved by the Engineer. The unlimited removal of trees and brush will generally not be required or permitted. All trees, bushes or shrubs which are not to be removed shall be preserved and protected by the Contractor. Should any trees, bushes or shrubs, which are to be preserved and protected, become damaged by the conduct of the work, the Contractor shall replace them at his own expense. Brush, small branches, trash, large trunks, stumps and all other surplus material and debris shall be removed from the site of the work.

Trenching: Prior to any excavation, the Contractor shall notify all affected utilities in accord with Public Act 77-350 (CALL BEFORE YOU DIG 1-800-922-4455).

The trench for the pipe shall be 18-inches beyond the outside of the barrel of the pipe on each side, the top of the barrel of the pipe shall be as shown on the Contract Drawings or as directed by the Engineer; and the bottom of the trench shall be at the bottom of the pipe. The Contractor alone shall be responsible for the stability and safety of the trenches and adjacent structures, and shall use such trench support and bracing as necessary without additional payment therefor. Pavement cuts shall be made with the edges reasonably smooth and without cracking or damage to the pavement outside the limits of the portion excavated. The methods used and the location of such cuts shall conform to the requirements and specifications of the City or State. Repairs to pavement shall be made in accordance with the requirements and specifications of the City/Town or State.

In any area to receive fill, no pipe trench shall be excavated until the fill has been placed and compacted to a level at least 3-feet above the top of the pipe to be installed.

The Contractor may be required to excavate locally to determine the location and depth of existing underground structures on the lines of the pipe well in advance of the pipe laying. There will be no additional payment for this work, including backfilling and temporary surfacing.

Sheeting, Bracing and Pumping: The Contractor shall furnish and put in place such sheeting and bracing as may be necessary, to support the sides of the excavation, to prevent undermining of the pavement or to protect from possible injury any pipes, sewers, ducts, poles, conduits or other structures existing in the streets, or highways, and shall remove such sheeting and bracing as the trench is refilled unless the Engineer shall order it left in place.

The Contractor shall maintain all excavations in proper condition for carrying on the work, and to this end shall do all bailing, draining, or pumping which may be necessary to keep the trenches or other excavations free of water. No direct payment will be made for this work but the cost thereof will be considered as having been included in the price bid per linear feet of pipe.

If the Contractor installs and operates wellpoints on any section of the work, the expense of the same shall be borne by the Contractor.

Protection of Pipes, Drains, Culverts, etc.: All existing gas pipes, water pipes, sewers, drains, manholes, catch basins, culverts, electrical conduits, telephone ducts, utility poles or other structures which are uncovered by the excavation, and which do not, in the opinion of the Engineer, require to be changed in location, shall be carefully supported and protected from injury by the Contractor; and in case of damage, they shall be restored by him without compensation; therefore, to as good condition as that in which they were found and shall be kept in repair during the existence of this Contract.

Laying Ductile Iron Pipe: Proper and suitable tools and appliances for safe and convenient handling and laying of pipe shall be used, and care shall be taken to prevent the coating of the pipe from being damaged, particularly on the inside of the pipes. The Contractor shall not start any pipe work until he has satisfied the Engineer that he has on hand and available the following minimum equipment:

1. Wheel pipe cutters, hydraulic pipe cutter or a pipe saw for the sizes of pipe to be laid;

2. Ratchet type socket wrenches for mechanical joint bolts and nuts;

3. At least two expandable pipe stops of the proper size for closing the end of the pipe being laid when not actually laying pipe.

All pipes shall be carefully examined for defects and no pipe or other casting shall be laid which is known to be defective, and should any defective pipe or other casting be discovered after being laid, it shall be removed and replaced with a sound casting at the expense of the Contractor.

The pipe shall be laid upon sound soil, cut true and even so that the barrel of the pipe will have a bearing for its full length. In the event the trench is excavated below the grade of the bottom of the pipe, the trench will be brought up to grade with acceptable crushed stone or processed gravel, pneumatically tamped, at the expense of the Contractor, before the pipe is laid.

The utility identification tape shall be place approximately two (2) feet above the top of the pipe.

When not actually laying pipe (e.g. overnight, weekends, holidays, etc.) the open ends of the pipe shall be kept plugged with approved watertight night caps furnished by the Contractor.

The Contractor shall take all necessary precautions to prevent water from entering the pipe during installation of the pipeline.

Unless shown otherwise on the Contract Drawings or directed otherwise by the Engineer, the pipeline shall be installed a minimum of four (4) feet - six (6) inches below finished grade. The pipeline shall also be installed to provide at least eighteen (18) inches of vertical clearance between the water pipe and storm drains or sanitary sewers.

Cutting Pipe: Whenever the pipes require cutting, an approved saw, wheel, or hydraulic type cutter shall be used. This work shall be done by the Contractor without extra compensation, in a manner satisfactory to the Engineer, and only experienced men shall be engaged thereon.

Joints: On pipe with rubber gasket push-on joints, the gasket shall be installed in the socket of the pipe previously laid and the gasket then lubricated. The plain end of the pipe being laid shall then be inserted and pulled or pushed to the full depth of the socket. An approved jack-type tool shall be used to assemble pipe 10-inchs and larger. Plain ends of cut pipe shall be filed or ground to a taper to prevent damage to the gasket during insertion.

On fittings, butterfly and gate valves with mechanical joints, the follower ring and rubber gaskets shall be placed on the plain end of the pipe being (or previously) laid and entered into the socket of the fitting. The gasket shall then be evenly seated in the socket, the follower ring moved up to the face of the gasket and the "T" bolts inserted and made finger tight. The "T" bolts shall then be tightened with a ratchet or torque wrench to between 60 and 80 foot-pounds. See S-1.19 for additional joint requirements.

Joint Restraints: Where and as shown on the Contract Drawings, or as directed by the Engineer, retaining glands shall be installed with the standard lacing details shown for mechanical joint fittings.

The retaining glands shall be installed in lieu of the standard mechanical joint gland. The "T" bolts shall be tightened with a ratchet or torque wrench to between 60 and 80 foot-pounds. Only then shall the set screws be tightened to a maximum of 70 foot-pounds, tightening 180 degrees apart and making a final check with the wrench to ascertain that all set screws have 70 foot-pounds. The joint is then complete. Torque settings shall be done with the pipe laid in the trench in place.

Other special lacing or harnessing, if shown on the Contract Drawings, or directed by the Engineer shall be installed by the Contractor to the satisfaction of the Engineer.

Refilling Trenches: As soon as practicable after the pipes have been laid, the trenches shall be refilled at least to a level 2-feet above the top of the pipe with approved gravel, deposited in layers no more than 6-inchs in depth and satisfactorily compacted with pneumatic hand tampers, each layer to be leveled and thoroughly compacted to the satisfaction of the Engineer before the next layer is deposited. There will be no additional payment for necessary borrow to refill to this level. Special care shall be taken to consolidate the gravel under the pipes and the whole work of refilling shall be done in a manner which will prevent subsequent settlement and injury to the pipe. Above this level except for the surfacing material, the Contractor may use approved material from the trench excavation.

Trench Backfill: Backfill above the 24-inch level will comply with and be paid for under the appropriate items included in this Contract.

Frost in Trench or Refill: Every effort shall be extended to eliminate the presence of frost in the bottom and sides of the trench and refill material. The Contractor shall cover and heat the trench or take such other means as necessary to eliminate the frost and chance of subsequent pipe settlement.

Removal of abandoned water gate box and water manhole: water gate valves within the limits of relocation which are no longer in service shall be placed in the closed position and the gate box completely removed. Water manholes within the limits of relocation which are no longer in service shall be removed whenever possible. All work shall take place after the existing water main has been properly abandoned.

Cleaning: Prior to the installation of the pipeline, the Contractor shall clean the interior of the pipelines to the satisfaction of the Engineer, by such means as the Engineer approves.

Filling, Sterilizing and Flushing: At the location(s) as shown on the Contract Drawings or as ordered by the Engineer, the Contractor shall install an appropriately sized chlorination inlet, chlorination blow-off and sterilization sampling connection point on the crown of the pipe for sterilization testing. All costs for providing and installing said fittings shall be included in the unit price bid per foot of pipe or pipeline installed. As soon as practicable after the Contractor has completed installation of the pipeline to include a successful leakage and hydrostatic test, the District will fill, and flush the pipeline. The Contractor shall supply labor to assist the District in filling and flushing the pipeline. If the pipeline is not connected to an existing operating water main, the Contractor shall furnish all labor, materials, equipment, at no extra cost to the District or State, to temporarily connect a District water main to the pipeline to be tested. The Contractor will not be charged for the District water used in this operation. The Contractor shall be responsible for labor, equipment and material necessary for erosion control.

Subsequent to sterilizing and flushing the water main(s), the District will test the water in accord with required state regulations. Should the water fail to pass the required tests and it is determined that the failure was caused by the Contractor's operations, all costs for re-sterilization, re-flushing, re-testing, etc., shall be borne by the Contractor.

The Contractor will attempt to minimize any damage to the road work that may occur during the flushing operation; however, he shall repair any such minor damage and the cost thereof will be considered as included in the price bid per linear feet of pipe.

Disinfecting and Flushing Water Mains Continuous Hypochlorite Feed Method

The work specified in this section describes continuous feed method of disinfecting newly constructed potable-water mains. The Contractor installing water mains and appurtenances such as pipe, valves, fittings and accessories within the Owner service area is responsible for disinfecting the water main and pipe sections. The Owner requires the Contractor to adhere to the strict standards stipulated in latest edition of AWWA C651, "Standard for Disinfecting Water Mains" when performing disinfection procedures. The standards represent the physical, chemical and bacteriological parameters that must be satisfied prior to determining if newly installed water mains can be placed into service.

The Contractor installing water mains and appurtenances within the Owner service area is responsible for all operations related to disinfecting water mains and pipe sections except working on the existing water distribution system. The gates within the existing water distribution system shall be operated only by the Owner.
The Contractor shall be required to issue a submittal for the subcontractor that will be performing the chlorine injection. The submittal shall include a minimum of three disinfection jobs of equal size and scope within the last two years and three references with contact information to establish the minimum level of required experience to perform the chlorine

injection on the project. The Contractor shall be allowed to proceed with the implementation of this Section only if the submittal has been approved by the Owner.

After flushing and subsequent to performing the disinfection operation, the Owner will collect and analyze two complete sets of water samples**.** The two sets of water samples will be collected approximately twenty-four hours apart from each other. The first sample will be taken 2 hours after flushing and the second sample 24 hours after the first sample. Anticipate approximately two business days for sampling and test results. The Owner will compare the results from the water samples collected to the maximum allowable limits for each parameter. If all parameters are satisfactory then the water main is considered to have passed and can now be opened for service. It is important to note that if any one parameter fails then two additional water samples will be collected twenty-four hours apart from each other. The parameters used to compare to the water sample results are listed in Table 1.

Use of Owner supplied water for flushing purposes may be limited during periods of high demand or when temperatures exceed 95 degrees Fahrenheit.

Submittals

The Contractor shall provide submittals for the sodium hypochlorite solution verifying NSF/ANSI 60 along with Material Safety Data Sheets. The Contractor shall be responsible for developing a detailed plan that discusses at a minimum the scouring full pipe diameter flushing, methods for handling the volume of water from the flushing operation, disinfecting procedure with liquid sodium hypochlorite solution, de-chlorination procedure and sampling for each section of new water main to be tested. The Contractor shall provide a detailed submittal to the Engineer and Owner that outlines the specifics of the proposed procedures for each location.

SODIUM HYPOCHLORITE SOLUTION

Sodium hypochlorite conforming to ANSI/AWWA B300 is available in liquid form in glass, rubber-lined or plastic containers typically ranging in size from 1 quart to 5 gallons. Sodium hypochlorite contains approximately 5% to 15% available chlorine, and the storage conditions and time must be controlled to minimize its deterioration.

The sanitary handling of materials, the practices during construction, and the continual inspection of the work are the primary means for ensuring the sanitary condition of the water main. The effectiveness of disinfection depends on maintaining clean pipes and avoiding major contamination during construction activities.

PREVENTATIVE AND CORRECTIVE MEASURES DURING CONSTRUCTION

Heavy particles generally harbor bacteria and prevent elevated chlorine concentrations from contacting and killing these organisms. The procedures of this specification must be observed to assure that a water main and its appurtenances have been thoroughly cleaned for the final disinfection by chlorination. Also, any connection of a new water main to the active distribution system prior to the receipt of satisfactory physical and bacteriological sample results may

constitute a cross-connection. Therefore, new water mains must be isolated until physical and bacteriological tests, immediately after and 24 hours following flushing of the water main, are satisfactorily completed and meeting Owner specifications.

A successful disinfection process begins at the early stages of construction. The Contractor must protect piping systems from contamination including interiors of pipes, fittings and valves. Pipe and appurtenances delivered for construction shall be capped or bagged to minimize the entrance of foreign material. All openings in the pipeline shall be closed with watertight plugs when pipe laying is stopped at the close of the day's work or for other reasons, such as rest breaks or meal periods. Rodent-proof plugs may be used when watertight plugs are not practicable and when thorough cleaning will be performed by flushing or other means. The sanitary handling of materials, the practices during construction, and the continual inspection of the work are the primary means for ensuring the sanitary condition of the water main.

Delay in placement of delivered pipe invites contamination. The more closely the rate of delivery is correlated to the rate of pipe laying, the lower the risk of contamination.

JOINTS. Joints of all pipes in the trench shall be completed before work is stopped. If water accumulates in the trench, the plugs shall remain in place until the trench is dry.

SEALING MATERIALS. No contaminated material or any material capable of supporting prolific growth of microorganisms shall be used for sealing joints. Sealing material or gaskets shall be handled in a manner that avoids contamination. The lubricant used in the installation of sealing gaskets shall be suitable for use in potable water and approved by the pipe manufacturer, and not contribute odors. It shall be delivered to the job in closed containers and shall be kept clean and applied with dedicated, clean applicator brushes.

CLEANING AND SWABBING. Each pipe section that is being readied for assembly in the field and just prior to installation, shall have the interior pipe surface swabbed with a 1% to 5% hypochlorite disinfecting solution using mechanical means like pulling a chlorine soaked mop or pigging device through the pipe or by power washing . If in the opinion of the Engineer, any dirt enters the pipe while being installed, the pipe will be swabbed again with 1% to 5%. The cleaning method used shall not force mud or debris into the interior pipe-joint spaces and shall be acceptable to the Engineer.

WET TRENCH CONSTRUCTION. If it is not possible to keep the pipe and fittings dry during installation, the water that may enter the pipe-joint spaces shall contain an available chlorine concentration of approximately 25 mg/L. This may be accomplished by adding calcium hypochlorite granules or tablets to each length of the pipe before it is lowered into a wet trench or by treating the trench water with hypochlorite tablets.

FLOODING BY STORM OR ACCIDENT DURING CONSTRUCTION. If the main is flooded during construction, it shall be cleared of the floodwater by draining and flushing with potable water until the main is clean. The section exposed to the floodwater shall then be filled with chlorinated potable water that, at the end of a 24-hour holding period, will have a free chlorine residual of not less than 25 mg/L. The chlorinated water may then be drained or flushed from the main.

PREFLUSHING OF SOURCE WATER.
The source water used for disinfection and pressure testing shall be flushed prior to its use to ensure that normally occurring contaminants or debris are not introduced into the new water main pipe. The Owner will be responsible for operating gate valves in the street as necessary. Adequate drainage must be provided during flushing, away from the construction area. The contractor shall be responsible for constructing temporary discharge piping and/or materials as necessary, at no additional cost to the Owner.

CONTINUOUS FEED METHOD OF CHLORINATION

Hypo-chlorination utilizes a concentrated dose of chlorine solution, usually 25 ppm for a 24 hour period, to eradicate bacterial contamination. This is a critical operation that requires skilled personnel and therefore the Owner reserves his right to request the replacement of any Contractor / Subcontractor's personnel for lack of skills performing these tests The Contractor shall not be compensated for the replacement of his Subcontractor or its personnel if requested by the Owner as a result of lack of skills in performing these tests. The Owner has developed safe and effective hypo-chlorination procedures**.** These procedures allow for disinfecting a new section of the MDC water distribution system, minimizing the risk to the field crews, to customers and to the environment. These procedures are to be followed when disinfecting all new pipelines which utilize the injection of sodium hypochlorite.

FINAL FLUSHING

After the applicable retention period of 24 hours, heavily chlorinated water should not remain in prolonged contact with the pipe. In order to prevent damage to the pipe lining or to prevent corrosion damage to the pipe itself, the heavily chlorinated water shall be flushed from the main, fittings, valves and branches until chlorine measurements show that the concentration in the main is no higher than that generally prevailing in the distribution system.

The Contractor shall make arrangements with the Owner to flush the new water main following disinfection. Owner forces shall be responsible for operating the gate valves in the street as

necessary. It is important to note here that the new water main shall be kept isolated from the active distribution system using a physical separation until disinfectant has been flushed and satisfactory bacteriological, physical and VOC testing has been completed. Operation of all valves used in filling and flushing the line shall be performed by Owner personnel.

The Contractor shall be responsible for supplying necessary materials, equipment and appurtenances for neutralizing the chlorine and to perform all flushing operations except the operating of gate valves within the existing water distribution system. The minimum materials and equipment required to flush and neutralize the water main are:

- Five 3-inch x 20-foot rubber hoses, each with 3-inch male x female Camlock Couplings.
- Dechlorination device, model 3M-CLA, manufactured by Measurement Technologies, Sammamish WA or approved equal.
- Standard hydrant wrench.
- 90-degree ductile iron elbow with retaining gland, either 4 or 6-inch depending on blow off size.
- Customized 4 or 6-inch, 3/8-inch thick metal plate that bolts on to the 90-degree ductile iron elbow with 2-1/2-inch male fire connection (NST) thread. 4 or 6-inch depends on the blow off size.
- Ascorbic acid powder supplied by Bran NU Labs in Meriden CT or approved equal.

The Contractor shall also be responsible for determining where the water will drain during the flushing operation so as not to cause localized flooding or cause damage to property or the environment. The environment to which the chlorinated water is to be discharged shall be inspected. Following neutralization of the chlorinated water, the level of chlorine shall be between 0.1 and 0.8 mg/l and in no case higher than the chlorine level in the distribution system. It is important to note that during the summer months water mains tend to take longer to disinfect due to higher ambient temperatures increasing the bacterial count. Usually, additional flushing will result in successfully disinfecting the water main.

DISINFECTION TESTS

Following disinfection and flushing, Owner forces will collect and analyze water samples from the new main utilizing a copper sterilization sampling fitting located no more than every 1,200 feet along the newly constructed water main. Two sets of water samples will be collected: the first approximately 2 hours following the flushing operation, and the second set of samples will be collected 24 hours after the first set of samples was taken. The results are available approximately two business days following collection. The analytical results for the samples will be compared to the maximum allowable limits for each parameter as established by the Owner shown in Table 1. If the parameters are satisfactory for BOTH sets of water samples, then the water main is considered passing and can be opened for service.

To ensure the water sample integrity, the Owner requires the person taking the sample to complete a "Chain of Custody" form, see attachment. This form must accompany the water sample when transporting to the Owner's laboratory at Reservoir 6 prior to analyzing.

Table 1
Physical, Chemical and Bacteriological Parameters for Water Mains

Parameter	Maximum Allowable Limit
pH	6.4 to 10
Color	15 units
Turbidity	1.0 NTU
Odor	2
Hardness	60 ppm.
Specific Conductance	150 microhms at 25 ^{o}C
Coliform Bacteria	0 per 100 milliliters
Standard Heterotrophic Plate Count	< 500 per milliliter at 35 ^{o}C
Chlorine Residual	<0.1- 0.8 ppm.
Volatile Organic Compounds (VOC)	See attached **Procedure**

RESAMPLING

If the initial disinfection fails to produce satisfactory physical and bacteriological results for EITHER set of water samples, the new main shall be re-flushed and re-sampled (two sets of water samples).

If the new water main fails two rounds of sampling, the Owner shall determine if re-disinfection is needed or if the new main should only be flushed.

ATTACHMENT-CHAIN OF CUSTODY FORM
MDC - Sample Collection \ Chain of Custody

Rev. Date 5/30/12

Distribution Specials
New Mains

Project DVW (when applicable to Developer Permit Agreement):

Project Name (for all projects): _____

Town: _____

Sample I.D.	Location (street)	Size of Main	Length of Main
S1			
S2			
S3			
S4			

Is a VOC being submitted? **YES / NO**

Time Collected

S1	S2	S3	S4

Chlorine residual

S1	S2	S3	S4

Collected by _____

Any observations that might affect the physical and bacteriological quality of the water should be noted below:

_____

_____

Relinquished By:	Date / Time:
Received By:	Date / Time:
Relinquished By:	Date / Time:
Received By:	Date / Time:

Air Valve Assembly:

All brass fittings shall be of standard design generally used by water utilities and be in accord with ASTM B62 and ANSI/AWWA C800.

The corporation stops and angle valves shall be of good, tough, composition bronze well-mixed and free from flaws and imperfections. The corporation stops shall be of a type suitable for use in ductile iron mains. The inlet end shall have an inlet taper thread type known as the "Mueller Taper Thread".

Compression fittings, valves, etc. shall be of the design employing the pipe clamp feature.

The gate valve box shall conform to the following requirements:

1. Cast iron shall conform to ASTM A48, Class 25.

2. Top section shall be of the top flange design and shall have no bead on the bottom.

3. The word "WATER" shall be cast with raised letters in the center of the cover.
4. Base section shall be of the Dwyer design which centers the operating nut for positive access to the valve.

5. For specific gate box details, see the MDC Details.

Inspection Before Installation: All tubing and fittings shall be carefully examined for defects and no material shall be installed which is known to be defective and should any defective tubing or fitting be discovered after being installed, it shall be removed and replaced with sound material at no additional cost to the District.

Installation: The air valves, chlorination valve and blow-off shall be installed according to the details and to the satisfaction of the Engineer. To properly receive the air valve or other assembly the ductile iron pipe shall be drilled and tapped. All tapped holes for corporation stops shall be tapped Mueller Thread.

All tapped holes in ductile iron pipe shall be cleaned by running the correct size tap into the hole immediately prior to installing the corporation.

Gate valve boxes shall be set plumb and centered on the fitting, etc. Earth fill shall be carefully tamped around the gate box to a distance of 4 feet on all sides of the box or to the undistributed trench face, if less than 4 feet.

Excavation and refill shall conform to the requirements under other applicable Contract Sections.

12-Inch and Smaller Gate Valves:

Quality Assurance: All gate valves, accessories and gate boxes shall be inspected and tested at the foundry as required by the standard specifications to which the material is manufactured.

A certified statement that inspection and all of the specified tests have been made and met shall also be submitted.

All gate valves, accessories and gate boxes shall be subject to inspection by the Engineer after delivery to the job site and may also be subject to inspection at the foundry by a representative of the District.

In addition the District reserves the right to have any or all materials inspected and/or tested by an independent service at either the manufacturer's plant or elsewhere. Such inspection and/or tests shall be at the District's expense.

A certified statement that inspection and all of the specified tests have been made and met shall also be submitted.

Gate Valve: The gate valve shall conform to ANSI/AWWA C500, ANSI/AWWA C509 and the following additional requirements:

1. Valve shall be double disc or resilient sealed.

2. Bolts and nuts for connecting O-ring seal plates and bonnet to body shall either be copper-silicon alloy or stainless steel.

3. Valve shall be furnished with O-ring seals utilizing two O-rings, consistent with appropriate specifications.

4. Valve shall have mechanical joint ends, unless otherwise specifically indicated, which shall conform to ANSI/AWWA C111/A21.11. All joint accessories shall be furnished with each valve.

5. Direction to open (right-hand or left-hand) shall be as shown on the contract Drawings.

6. Operating nut shall be 2" square.

Gate Valve Box: The gate valve box shall conform to the following requirements:

1. Cast iron shall conform to ASTM A48, Class 25.

2. Top section shall be of the top flange design and shall have no bead on the bottom.

3. The word "WATER" shall be cast with raised letters in the center of the cover.

4. Base section shall be of the Dwyer design which centers the operating nut for positive access to the valve.

5. For specific gate box details, see the MDC Details.

Extension Stem: The extension stem shall be fabricated from steel conforming to ASTM A 36. Galvanizing shall conform to the latest edition of ASTM A 123.

Inspection Before Installation: The gate valve, gate box, etc. shall be subject to a careful inspection before being installed. The valve shall be run through a full open-close cycle to insure proper operation.

Installation of Gate Valve: The gate valve shall be installed according to the details shown and to the satisfaction of the Engineer.

All debris and foreign material shall be cleared from valve openings and seats. All mechanisms shall be checked and all nuts and bolts checked for tightness.

The valve box shall be set plumb and centered directly over the operating nut of the valves. Earth fill shall be carefully tamped around the valve box to a distance of 4 feet on all sides of the box or to the undisturbed trench face, if less than 4 feet.
Where and as shown on the Contract Drawings, or ordered, a valve extension stem shall be installed. An extension stem will be ordered when the valve-operating nut is more than 4.5 feet below finished grade.

Excavation and refill shall conform to the requirements under other applicable Contract Sections.

Blow-Off Assembly:
Quality Assurance: All blow-off assemblies including gate valves and fittings shall be inspected and tested at the foundry as required by the standard specifications to which the material is manufactured.

All blow-off assemblies including valves and fittings shall be subject to inspection by the Engineer after delivery to the job site and may also be subject to inspection at the foundry by a representative of the District.

In addition, the District reserves the right to have any or all blow-off assemblies including valves, fittings and special castings inspected and/or tested by an independent service at either the manufacturer's plant or elsewhere. Such inspection and/or the tests shall be at the District's expense.
A certified statement that inspection and all of the specified tests have been made and met shall also be submitted.

Inspection Before Installation: Blow-off assemblies including gate valves, pipe, fittings, gate boxes, etc. shall be subject to a careful inspection before being installed. Valves shall be run through a full open-close cycle to insure proper operation.

Installation of Blow-off Assemblies: Blow-off assemblies including piping, gate valves, fittings, etc. shall be installed according to the details shown and to the satisfaction of the Engineer.

All debris and foreign material shall be cleared from valve openings. The blow-off assembly shall be set plumb. Blow-off assemblies and connecting pipe shall have at least the same depth of cover as the distributing main.

Special trench refill shall be placed over the pipe and fittings from the bottom of the trench to 2 feet above the top of the pipe and fittings.

Ductile iron pipe and harnessing shall be installed in accord with the specifications.

The utility identification tape shall be placed approximately two (2) feet above the top of the pipe.

Gate valves and gate boxes shall be installed in accord with the specifications.

Three-quarter inch (3/4") crushed stone, special trench refill and concrete shall be placed in accord with the specifications.

Excavation and refill shall conform to the requirements under other applicable Contract Sections. Temporary and permanent paved and unpaved surface restoration shall conform to the requirements under other applicable Contract Sections.

Method of Measurement: This work will be measured for payment by the actual number of linear feet of ductile iron pipe, in the sizes indicated, complete as shown, specified and directed. The length of pipe to be measured shall be the length of the line after the pipes have been installed, measured or computed along the center line of the pipe from the center line of the main line valves or face of the terminal pipe or fitting, as shown on the Contract Drawings.

Gravel fill from the bottom of the trench to the level 24-inches above the top of the pipe will not be measured for payment, but will be included in the cost of the pipe.

The removal of abandoned water gate boxes will not be measured for payment, but will be included in the cost of the pipe.

Basis of Payment: This work will be paid for at the contract unit price per linear foot for “Ductile Iron Pipe (Water Main)”, of the appropriate size, complete and in place. The price shall also include the cost of digging test pits; transporting the materials; clearing, trenching; disposing of excavated materials, removing and disposing of the present water pipes and any appurtenances as needed, removing abandoned water gate boxes, furnishing and installing the pipelines complete as shown on plans or as directed, with lacing and harnessing where required, including fittings, pressure reducing valves, vaults, bends, restraint, filter fabric, bank gravel, sand, blow

off assemblies, gate/butterfly valves, air valves, sterilization fittings, DI casing sleeve, casing spacers, gate boxes, tees, thrust blocks, anchors, utility identification tape, refilling trenches; furnishing the additional materials; temporary and permanent resurfacing; grading; sheeting; bracing; pumping and all incidental work, except as otherwise herein provided for. No claim will be allowed because the number of pipes and joints may be greater than estimated by the Contractor. The price shall also include all material, transportation, labor, including labor required to assist the District during the testing, and equipment necessary to construct the pipelines in accord with the Contract Drawings, the Specifications and the requirements of the Engineer there under.

The cost of all excavation, disposing of excavated material, except that which is suitable for refilling, and furnishing other materials for refilling, unless otherwise specified, will be considered as having been included in the price bid per linear foot of pipeline.

No direct payment will be made for any work done or materials used in making the pipeline tight.

Pay Item	Pay Unit
10” DUCTILE IRON PIPE (WATER MAIN)	L.F.

ITEM #1507000A - PROTECTION AND SUPPORT OF EXISTING UTILITIES

Description: Work under this item shall consist of the protection and temporary support of utilities which will require support during the construction of the new structure as shown on the contract plans. The Contractor shall be responsible for providing facilities for the temporary support of the following utility during construction:

(10) – Conduits owned by Frontier Communications
(1) – 6" diameter gas main owned by Connecticut Natural Gas Corporation

Construction Methods: The Contractor shall design and construct the temporary support system for the utilities in a temporary location necessary to complete the new structure and shall be solely responsible for the adequacy of his design and erection scheme. The Contractor shall obtain all necessary permits for the performance of the work and shall assume all liabilities in connection therewith. The Contractor shall prepare and submit to the Engineer or any regulatory agency, working drawings showing the plan for construction of temporary support system. Working drawings shall be developed and submitted in accordance with Article 1.05.02. These drawings shall bear the seal of a Professional Engineer licensed in the State of Connecticut. Work shall not be started until approval from the Engineer and Southern New England Telephone Company has been obtained.

The approval of any regulatory agency or of the Engineer shall not serve to relieve the Contractor of the responsibility for the safety of his method or equipment of from carrying out the work in full accordance with the plans and specifications.

The relocation of the existing utility will be accomplished by the utility company involved. The Contractor shall fully coordinate his activities with the utility company, giving them adequate opportunity to relocate their facilities to the temporary locations as required and insuring that utility service remains uninterrupted if and as required by the utility company.

All parts of any temporary structures used in this work shall be removed and disposed of off the site after relocation of the utilities to their final location.

Method of Measurement: Work on this item, being paid for on a lump sum basis, will not be measured for payment.

Basis of Payment: This work will be paid for at the contract lump some price for "Protection and Support of Existing Utilities", which price shall include all materials, equipment, tools, labor and work incidental thereto. This shall include the construction and removal of any temporary structures, the implementation of any means of protection or support of existing utility facilities, and all else necessary by the Contractor for the support and protection of the utilities involved.

PERMITS AND/OR PERMIT APPLICATIONS

- GENERAL PERMIT FOR WATER RESOURCE CONSTRUCTION ACTIVITIES
- ARMY CORPS OF ENGINEERS CATEGORY 1

INTERDEPARTMENTAL MESSAGE **STATE OF CONNECTICUT**

To	NAME, TITLE Central Permit Processing Unit, 1st Floor	DATE October 2, 2015
	AGENCY, ADDRESS Department of Energy and Environmental Protection, 79 Elm Street, Hartford, CT.06106	
From	NAME, TITLE Mark W. Alexander, Transportation Assistant Planning Director	TELEPHONE 860-594-2931
	AGENCY, ADDRESS Department of Transportation, 2800 Berlin Turnpike, Newington, CT.06131-7546	

Subject: State DOT Project # 118-166
Replacement of Bridges Nos. 02102 and 04179, Route 99 o/ Hog Brook, Rocky Hill

Attached are an original and one hard copy of the CT DEEP Request for Authorization Form for the General Permit for Water Resource Construction Activities associated with the above referenced project.

Any questions pertaining to this application may be directed to Mr. Andrew H. Davis, Transportation Supervising Planner of my staff, at 860-594-2157.

Attachments

Zoltan M. Kanyo/zmk
bcc: Robbin L. Cabelus – Mark W. Alexander
Andrew H. Davis – Michael J. Salter
Kevin F. Carifa – Andrew Piraneo
Theodore H. Nezames – Rabih M. Barakat – Bryan H. Reed – Bao K. Chuong
Ravi Chandran – Dean Cerasoli – Mohammed Bishtawi

DEPARTMENT OF ENVIRONMENTAL PROTECTION
CENTRAL PERMIT PROCESSING UNIT
OCT 0 2 2015
RECEIVED BY BC

Connecticut Department of
Energy & Environmental Protection

CPPU USE ONLY
App #:
Doc #:
Check #:

Permit Application Transmittal Form

Please complete this transmittal form in accordance with the instructions in order to ensure the proper handling of your application(s) and the associated fee(s). Print legibly or type.

Part I: Applicant Information:

- **If an applicant is a corporation, limited liability company, limited partnership, limited liability partnership, or a statutory trust, it must be registered with the Secretary of State. If applicable, applicant's name shall be stated **exactly** as it is registered with the Secretary of State.*
- *If an applicant is an individual, provide the legal name (include suffix) in the following format: First Name; Middle Initial; Last Name; Suffix (Jr, Sr., II, III, etc.).*

Applicant: **Connecticut Department of Transportation**

Mailing Address: **2800 Berlin Turnpike**

City/Town: **Newington** State: **CT** Zip Code: **06111**

Business Phone: **(860) 594-2931** ext.: Fax: **(860) 594-3028**

Contact Person: **Mark W. Alexander** Phone: **(860) 594-2931** ext.

E-Mail: **Mark.W.Alexander@ct.gov**

Applicant (check one): ☐ individual ☐ *business entity ☐ federal agency ☒ state agency ☐ municipality ☐ tribal
*If a business entity, list type (e.g., corporation, limited partnership, etc.):

☐ Check if any co-applicants. If so, attach additional sheet(s) with the required information as supplied above.

Please provide the following information to be used for *billing purposes only*, if different:

Company/Individual Name:

Mailing Address:

City/Town: State: Zip Code:

Contact Person: Phone: ext.

Part II: Project Information

Brief Description of Project: *(Example: Development of a 50 slip marina on Long Island Sound)*

Replacement of Bridges Nos. 02102 and 04179 carrying Route 99 and a sidewalk over Hog Brook in Rocky Hill. Existing structures will be replaced by a single, box culvert in the same alignment as the existing.

Location (City/Town): **Rocky Hill**

Other Project Related Permits (*not* included with this form):

Permit Description	Issuing Authority	Submittal Date	Issuance Date	Denial Date	Permit #
ACOE CAT I	ACOE	Concurrent Submission			TBD

Part III: Individual Permit Application and Fee Information

New, Mod. or Renew	Individual Permit Applications	Initial Fees	No. of Permits Applied For	Total Initial Fees	Original + Required Copies
	AIR EMISSIONS				
	New Source Review	$940.00			1 + 0
	Title V Operating Permits	none			1 + 0
	Title IV	none			1 + 0
	Clean Air Interstate Rule (CAIR)	none			1 + 0
	WATER DISCHARGES				
	To Groundwater	$1300.00			1 + 1
	To Sanitary Sewer (POTW)	$1300.00			1 + 1
	To Surface Water (NPDES)	$1300.00			1 + 2
	INLAND WATER RESOURCES-multiple permits 1 + 6 total copies				
	Dam Construction	none			1 + 2
	Flood Management Certification	none			1 + 1
	Inland 401 Water Quality Certification	none			1 + 5
	Inland Wetlands and Watercourses	none			
	Stream Channel Encroachment Lines	★			
	Water Diversion	★			1 + 5
	OFFICE OF LONG ISLAND SOUND PROGRAMS				
	Certificate of Permission	$375.00			1 + 3
	Coastal 401 Water Quality Certification	none			1 + 3
	Structures and Dredging/Tidal Wetlands	$660.00			1 + 3
	WASTE MANAGEMENT				
	Aerial Pesticide Application	★			1 + 2
	Aquatic Pesticide Application	$200.00			1 + 0
	CGS Section 22a-454 Waste Facilities	★			1 + 1
	Hazardous Waste Treatment, Storage and Disposal Facilities	★			1 + 1
	Marine Terminal License	$125.00			1 + 0
	Stewardship	$4000.00			1 + 1
	Solid Waste Facilities	★			1 + 1
	Waste Transportation	★			1 + 0
		Subtotal ➡			
	GENERAL PERMITS and AUTHORIZATIONS	Subtotals Page 3 ➡			
	Enter subtotals from Part IV, pages 3 & 4 & 5 of this form	Subtotals Page 4 ➡	1	2500	
		Subtotals Page 5 ➡			
		TOTAL ➡	1	2500	
	☒ Indicate whether municipal discount or state waiver applies.	Less Applicable Discount ➡		100%	
		AMOUNT REMITTED ➡		0	

Check # ➡ _____ Check or money order should be made payable to: "Department of Energy and Environmental Protection"

★ See fee schedule on individual application.

Part IV: General Permit Registrations and Requests for Other Authorizations Application and Fee Information

✓	General Permits and Other Authorizations	Initial Fees	No. of Permits Applied For	Total Initial Fees	Original + Required Copies
	AIR EMISSIONS				
☐	Limit Potential to Emit from Major Stationary Sources of Air Pollution	$2760.00			1 + 0
☐	Ionizing Radiation Registration	$200.00			1 + 0
☐	Emergency/Temporary Authorization	★★			★★
☐	Other, (please specify):				
	WATER DISCHARGES				
☐	Domestic Sewage	$500.00			1 + 0
☐	Food Processing Wastewater	$500.00			1 + 0
☐	Groundwater Remediation Wastewater to a Sanitary Sewer	$500.00			1 + 0
☐ ☐	Groundwater Remediation Wastewater to a Surface Water Registration Only Approval of Registration by DEP	 $625.00 $1250.00			1 + 0
☐ ☐	Hydrostatic Pressure Testing Wastewater Registration Only Approval of Registration by DEP (natural gas pipelines)	 $625.00 $1250.00			1 + 0
☐ ☐	Miscellaneous Discharges of Sewer Compatible Wastewater Flow < 5,000 gpd and fire sprinkler system testwater Flow > 5,000 gpd	 $625.00 $1250.00			1 + 1
☐	Non-Contact Cooling and Heat Pump Water (Minor)	$625.00			1 + 1
☐	Photographic Processing Wastewater (Minor)	$100.00			1 + 0
☐	Printing & Publishing Wastewater (Minor) Flow < 40 gpd	$500.00 $100.00			1 + 0
☐	Stormwater Associated with Commercial Activities	$500.00			1 + 0
☐	Stormwater Associated with Industrial Activities <500 employees–see general permit for additional requirements >500 employees–see general permit for additional requirements	 $500.00 $1000.00			1 + 0
☐ ☐	Stormwater & Dewatering Wastewaters-Construction Activities 5 – 10 acres > 10 acres	 $625.00 $1250.00			1 + 0
☐	Stormwater from Small Municipal Separate Storm Sewer Systems (MS4)	$250.00			1 + 0
☐	Swimming Pool Wastewater - Public Pools and Contractors	$500.00			1 + 0
☐	Tumbling or Cleaning of Parts Wastewater (Minor)	$1000.00			1 + 1
☐ ☐	Vehicle Maintenance Wastewater Registration Only Approval of Registration by DEP	 $625.00 $1250.00			1 + 0
☐	Water Treatment Wastewater	$625.00			1 + 0
☐	Emergency/Temporary Authorization - Discharge to POTW	$1500.00			1 + 0
☐	Emergency/Temporary Authorization - Discharge to Surface Water	$1500.00			1 + 0
☐	Emergency/Temporary Authorization - Discharge to Groundwater	$1500.00			1 + 0
☐	Other, (please specify):				
	Note: Carry subtotals over to Part III, page 2 of this form.	Subtotal ➡			

★★ Contact the specific permit program for this information (Contact numbers are provided in the instructions).

Part IV: General Permit Registrations and Requests for Other Authorizations (continued)

✓	General Permits and Other Authorizations	Initial Fees	No. of Permits Applied For	Total Initial Fee	Original + Required Copies
	AQUIFER PROTECTION PROGRAM				
☐	Registration for Regulated Activities	$625.00			1 + 0
☐	Permit Application to Add a Regulated Activity	$1250.00			1 + 0
☐	Exemption Application from Registration	$1250.00			1 + 0
	INLAND WATER RESOURCES				
☐	Dam Safety Repair and Alteration	$1000.00			1 + 2
☐	Diversion of Water for Consumptive Use: Reauthorization Categories	$1000.00			1 + 2
☐	Diversion of Water for Consumptive Use: Authorization Required	$2500.00			1 + 5
☐	Diversion of Water for Consumptive Use: Filing Only	$1500.00			1 + 4
☐	Habitat Conservation	$1000.00			1 + 2
☐	Lake, Pond and Basin Dredging	$1000.00			1 + 2
☐	Minor Grading	$1000.00			1 + 2
☐	Minor Structures	$1000.00			1 + 2
☐	Utilities and Drainage	$1000.00			1 + 2
☐	Emergency/Temporary Authorization	★★			★★
☒	Other, (please specify): IWRD WATER RESOURCE CONSTRUCTION ACT		1	2500	
	OFFICE OF LONG ISLAND SOUND PROGRAMS				
☐	4/40 Docks	$700.00			1 + 1
☐	Beach Grading	$100.00			1 + 1
☐	Coastal Remedial Activities Required by Order	$700.00			1 + 1
☐	Dock Reconstruction	$300.00			1 + 1
☐	Marina and Mooring Field Reconfiguration	$700.00			1 + 1
☐	Non-harbor Moorings	$100.00			1 + 1
☐	Osprey Platforms and Perch Poles	none			1 + 1
☐	Pump-out Facilities (no fee for Clean Vessel Act grant recipients)	$100.00			1 + 1
☐	Removal of Derelict Structures	$100.00			1 + 1
☐	Residential Flood Hazard Mitigation	$100.00			1 + 1
☐	Swim Floats	$100.00			1 + 1
☐	Emergency/Temporary Authorization	★★			★★
☐	Other, (please specify):				
	Note: Carry subtotals over to Part III, page 2 of this form. Subtotal		1	2500	

★ See fee schedule on registration/application. ★★ Contact the specific permit program for this information.

Part IV: General Permit Registrations and Requests for Other Authorizations (continued)

✓	General Permits and Other Authorizations	Initial Fees	No. of Permits Applied For	Total Initial Fee	Original + Required Copies
	WASTE MANAGEMENT				
☐	Addition of Grass Clippings at Registered Leaf Composting Facilities	$500.00			1 + 0
☐	Asbestos Disposal Authorization	$300.00			1 + 0
	Certain Recycling Facilities				
☐	Drop-site Recycling Facility	$200.00			1 + 0
☐	Limited Processing Recycling Facility	$500.00			1 + 0
☐	Recyclables Transfer Facility	$500.00			1 + 0
☐	Single Item Recycling Facility	$500.00			1 + 0
	Contaminated Soil and/or Staging Management (Staging/Transfer)				
☐	Registration Only	$250.00			1 + 0
☐	Approval of Registration by DEP	$1500.00			1 + 0
☐	Connecticut Solid Waste Demonstration Project	$1000.00			1 + 0
☐	Disassembling Used Electronics	$400.00			1 + 0
☐	Leaf Composting Facility	none			1 + 1
☐	Municipal Transfer Station	$800.00			1 + 1
☐	One Day Collection of Certain Wastes and Household Hazardous Waste	$1000.00			1 + 0
☐	Special Waste Authorization	$660.00			1 + 0
☐	Storage and Distribution of Two (2) Inch Nominal Tire Chip Aggregate	$500.00			1 + 0
☐	Storage and Processing of Asphalt Roofing Shingle Waste and/or Storage and Distribution of Ground Asphalt Aggregate	★			1 + 0
☐	Storage and Processing of Scrap Tires for Beneficial Use	$1000.00			1 + 0
☐	Emergency/Temporary Authorization	★★			★★
☐	Other, (please specify):				
	REMEDIATION				
☐	In Situ Groundwater Remediation: Enhance Aerobic Biodegradation	★			1 + 2
	Note: Carry subtotals over to Part III, page 2 of this form. Subtotal ➡				

★See fee schedule on registration/application. ★★Contact the specific permit program for this information.

The Department of Energy and Environmental Protection is an affirmative action/equal opportunity employer and service provider. In conformance with the Americans with Disabilities Act, DEEP makes every effort to provide equally effective services for persons with disabilities. Individuals with disabilities who need this information in an alternative format, to allow them to benefit and/or participate in the agency's programs and services, should call 860-424-3035 or e-mail the ADA Coordinator at DEP.aaoffice@ct.gov. Persons who are hearing impaired should call the State of Connecticut relay number 711.

Connecticut Department of
Energy & Environmental Protection
Bureau of Water Protection & Land Reuse
Inland Water Resources Division

Request for Authorization Form for the General Permit for Water Resource Construction Activities

CPPU USE ONLY
App #:
Doc #:
Check #:
Program: GP IWRD Construction Activities

Please complete this form in accordance with the instructions (DEP-IWRD-REG-013) to ensure the proper handling of your request. Print or type unless otherwise noted. You must submit the fee along with this completed form.

Part I: Request and Fee Type

Check the appropriate box identifying the request type.

☐ *$5000* [#1757] for each **Request for Authorization** for Section 3(a)(1), (a)(2), (a)(3), (a)(4), (a)(5), (a)(6), or (a)(7) activities under the subject general permit, unless you qualify as one of the following: ☐ *$2500* for any municipality ☐ *$2500* for electronic filing*	☒ *$2500* [#1758] for each **Request for Authorization** for Section 3(a)(8) or 3(a)(9) activities under the subject general permit, unless you qualify as one of the following: ☐ *$1250* for any municipality ☐ *$1250* for electronic filing*

In order to file electronically, **ALL supporting documents under Part VI of this application must be submitted in an electronic format on a CD, along with this original completed application in hard copy.*

The request will not be processed without the fee. The fee shall be non-refundable and shall be paid by check or money order to the Department of Energy and Environmental Protection.

Town where site is located: Rocky Hill, Connecticut

Brief Description of Project: Bridge No. 02102 carries State Route 99 over Hog Brook in Rocky Hill. The existing structure is a masonry arch extended with a concrete slab on reinforced concrete abutments. Due to superstructure deterioration, the existing structure will be replaced with a 18'x6'-6" pre-cast, 4-sided box culvert with two feet of natural streambed material and dual riparian shelves. This new structure will be lengthened to encompass the existing pedestrian bridge No. 04179 that carries the sidewalk along the inlet over Hog Brook. Work is anticipated to begin in spring 2016 and last for 5 months with a road closure of 7 continuous days taking place in August 2016. During this road closure, all traffic will be detoured to provide a safe work environment and to minimize the duration of the construction so that the road can be opened to the public as soon as possible. Accelerated bridge construction techniques will be used with the goal of keeping the interruption of traffic to a minimum.

If there are any changes or corrections to your company/facility or individual name, mailing or billing address or contact information, please complete and submit the Request to Change Company/Individual Information to the address indicated on the form. For any other changes you must contact the specific program from which you hold a current DEEP license. If there is a change in ownership, please contact the Permit Assistance Office for questions concerning license transfers at 860-424-3003.

Part II: Requestor Information

- **If a requester is a corporation, limited liability company, limited partnership, limited liability partnership, or a statutory trust, it must be registered with the Secretary of State. If applicable, requester's name shall be stated **exactly** as it is registered with the Secretary of State. Please note, for those entities registered with the Secretary of State, the registered name will be the name used by DEEP. This information can be accessed at the Secretary of State's database (CONCORD).* (**www.concord-sots.ct.gov/CONCORD/index.jsp**)
- *If a requester is an individual, provide the legal name (include suffix) in the following format: First Name; Middle Initial; Last Name; Suffix (Jr, Sr., II, III, etc.).*

1. **Requester Name:** Connecticut Department of Transportation

Mailing Address: 2800 Berlin Turnpike

City/Town: Newington State: CT Zip Code: 06111

Business Phone: 860-594-2931 ext.:

Contact Person: **Mark W. Alexander** Phone: 860-594-2931 ext.

E-mail: Mark.W.Alexander@ct.gov

*By providing this e-mail address you are agreeing to receive official correspondence from the department, at this electronic address, concerning the subject request. Please remember to check your security settings to be sure you can receive e-mails from "ct.gov" addresses. Also, please notify the department if your e-mail address changes.

a) Requester Type (check one):

☐ individual ☐ federal agency ☒ state agency ☐ municipality ☐ tribal

☐ *business entity (*If a business entity complete i through iii):

i) check type: ☐ corporation ☐ limited liability company ☐ limited partnership ☐ limited liability partnership ☐ statutory trust ☐ Other: _____

ii) provide Secretary of the State business ID #:_____This information can be accessed at *database (CONCORD).* (**www.concord-sots.ct.gov/CONCORD/index.jsp**)

iii) ☐ Check here if you are **NOT** registered with the Secretary of State's office.

☐ Check here if any co-registrants. If so, attach additional sheet(s) with the required information as requested above.

b) Requester's interest in property at which the proposed activity is to be located:

☒ site owner ☐ option holder ☐ lessee ☐ easement holder ☐ operator

☐ other (specify): _____

2. **Billing contact, if different than the requester.**

Name: **N/A**

Mailing Address:

City/Town: State: Zip Code:

Business Phone: ext.

Contact Person: Title:

Email:

Part II: Requestor Information (continued)

3. **Primary contact for departmental correspondence and inquiries, if different than the requester.**

Name: **N/A**

Mailing Address:

City/Town: State: Zip Code:

Business Phone: ext.

Contact Person: Title:

Email:

*By providing this e-mail address you are agreeing to receive official correspondence from the department, at this electronic address, concerning the subject request. Please remember to check your security settings to be sure you can receive e-mails from "ct.gov" addresses. Also, please notify the department if your e-mail address changes.

4. **Attorney or other representative, if applicable:**

Firm Name: **N/A**

Mailing Address:

City/Town: State: Zip Code:

Business Phone: ext.

Attorney:

Email:

5. **Site Owner, if different than the requester.**

Name: **N/A**

Mailing Address:

City/Town: State: Zip Code:

Business Phone: ext.

Contact Person: Title:

Email:

6. **Engineer(s) or other consultant(s) employed or retained to assist in preparing the request or in designing or constructing the activity.**

Name: **Connecticut Department of Transportation**

Mailing Address: **2800 Berlin Turnpike**

City/Town: **Newington** State: **CT** Zip Code: **06111**

Business Phone: **860-594-3316** ext.

Contact Person: **Bao K. Chuong** Title: **Project Engineer**

Email: **Bao.Chuong@ct.gov**

Service Provided: **Application Preparation**

☐ Check here if additional sheets are necessary, and label and attach them to this sheet.

Part III: Site Information

1. **SITE NAME AND LOCATION**

Name of Site : **Project No. 118-166 in Rocky Hill, Bridge No. 02102 and No. 04179 carrying Route 99 (Main Street) over Hog Brook.**

Street Address or Location Description: **State Route 99 approximately 0.6 miles south of the junction with State Route 160 (Elm Street). Bridge No. 02102 carries Route 99 over Hog Brook.**

City/Town: **Rocky Hill** State: **CT** Zip Code: **06067**

Tax Assessor's Reference: Map **N/A** Block Lot

Latitude and longitude of the exact location of the proposed activity in degrees, minutes, and seconds or in decimal degrees: Latitude: **N 41° 39' 25"** Longitude: **W 72° 38' 24"**

Method of determination (check one):

☐ GPS ☐ USGS Map ☒ Other (please specify): **Google Earth**

If a USGS Map was used, provide the quadrangle name:

2. **INDIAN LANDS:** Is or will the facility be located on federally recognized Indian lands? ☐ Yes ☒ No

3. **COASTAL BOUNDARY:** Is the activity which is the subject of this registration located within the coastal boundary as delineated on DEEP approved coastal boundary maps? ☐ Yes ☒ No

If yes, and this registration is for a new authorization, or a modification of an existing authorization where the physical footprint of the subject activity is modified, you must submit a *Coastal Consistency Review Form* (DEP-APP-004) with your registration as Attachment C.

Information on the coastal boundary is available at the local town hall or on the "Coastal Boundary Map" available at DEEP Maps and Publications (860-424-3555).

4. **ENDANGERED OR THREATENED SPECIES:** According to the most current "State and Federal Listed Species and Natural Communities Map", is the project site located within an area identified as a habitat for endangered, threatened or special concern species or located less than ½ mile upstream or downstream of such an area? ☒ Yes ☐ No Date of Map: **December 2014**

If yes, complete and submit a *Request for NDDB State Listed Species Review Form* (DEP-APP-007) to the address specified on the form. **Please note NDDB review generally takes 4 to 6 weeks and may require additional documentation from the registrant.**

A **copy** of the completed *Request for NDDB State Listed Species Review Form* **and** the CT NDDB response ***must*** be submitted with this completed registration as Attachment D.

For more information visit the DEEP website at www.ct.gov/dep/nddbrequests or call the NDDB at 860-424-3011.

5. **AQUIFER PROTECTION AREAS:** Is the site located within a town required to establish Aquifer Protection Areas, as defined in section 22a-354a through 354bb of the General Statutes (CGS)?

☒ Yes ☐ No To view the applicable list of towns and maps visit the DEEP website at www.ct.gov/deep/aquiferprotection

If yes, is the site within an area identified on a Level A map? ☐ Yes ☒ No

If yes, is the site within an area identified on a Level B map? ☐ Yes ☒ No

If your site is on a Level A map, check the DEEP website, Business and Industry Information to determine if your activity is required to be registered under the Aquifer Protection Area Program.

If your site is on a Level B map, no action is required at this time, however you may be required to register under the Aquifer Protection Area Program in the future when the area is delineated as Level A.

Part III: Site Information (continued)

6. **CONSERVATION OR PRESERVATION RESTRICTION:** Is the property subject to a conservation or preservation restriction? ☐ Yes ☒ No

   If Yes, proof of written notice of this registration to the holder of such restriction or a letter from the holder of such restriction verifying that this registration is in compliance with the terms of the restriction, must be submitted as Attachment E.

Part IV: Construction Activity Details

1. Proposed Date of Initiation of Activity: **April 1, 2016**
2. Anticipated Date of Completion: **October 31, 2016**
3. Name of the wetland or watercourse involved with or adjacent to the subject activity:

   Hog Brook

4. Is the subject activity within a watercourse or floodplain? ☐ Yes ☒ No
5. Will the subject activity be within a FEMA floodway? ☐ Yes ☒ No
6. If the project requires a Flood Management Certification for the subject activity, provide the Flood Management Certification Number: **Not required**
7. Disturbance to wetlands, watercourses and flood plains:

   Wetlands (acres):
   excavation: **0.0014 temporary/ 0.0390 permanent** fill: **0.0021 temporary/ 0.0356 permanent** total disturbance: **0.0116 temporary/ 0.0482 permanent**

   Floodplain (cubic yards):
   excavation: _____ fill: _____ net: _____

   Watercourse (linear feet): **26.67 temporary / 119.67 permanent**

8. Describe the present and intended use(s) of the property at which the subject activity will be conducted and the reason for conducting or maintaining the activity. **The existing bridge No. 02102 is composed of a masonry arch extended with a concrete slab on reinforced concrete abutments. It carries Route 99 over Hog Brook in Rocky Hill. Pedestrian Bridge No. 04179 is made up of rolled steel beams on reinforced concrete abutments, and carries the concrete sidewalk over Hog Brook to the West of Bridge No. 02102. Due to superstructure deterioration, Bridge Nos. 02102 and 04179 will be replaced with a single 18'x6'-6" 4-sided box culvert containing 2 feet of natural streambed material. The intended use remains the same.**
9. Describe all natural and manmade features impacted by the subject activity, including wetlands, watercourses, fish and wildlife habitat, floodplains, and structures and appurtenances thereto, and the impact of the subject activity on such features. **Hog Brook and the surrounding wetlands will be disturbed with some areas being permanently altered. Temporary impacts include impacts from the temporary water-handling system, excavation of the existing roadway and temporary right-of-way for construction activities. Some trees and plants will be stumped or removed, and pavement and guiderails on Route 99 will be temporarily removed during construction. Permanent impacts include the new culvert with natural streambed material, the water main relocation underneath the inlet, the relocation of 4 utility poles, the regrading of the existing ground surface, the addition of riprap for permanent slope stabilization, and the reconstruction of a deteriorated paved swale into a new riprap swale on the outlet side.**

☐ Check here if additional sheets are necessary, and label and attach them to this sheet.

Part V: Municipal Information

You must submit a complete copy of this completed request for authorization, including supporting documents, to the municipal wetlands agency, zoning commission, planning commission or combined planning and zoning commission, and conservation commission of each municipality which is or may be affected by the subject activity. Enter the names and address of the municipal agencies which were provided a complete copy of your request for authorization and the date such copy was submitted (Date of Service) and the Type of Service. **Note: For those activities not required to obtain approval from the commissioner, the activity may not be conducted sooner than sixty days after the date of service to the municipal agencies.**

1. Name: **CONSERVATION COMMISSION**
   Address: **761 Old Main St.**
   City/Town: **Rocky Hill** State: **CT** Zip Code: **06067**
   Business Phone: **860-258-2766** ext.
   Email:
   Date of Service:
   Type of Service: ☐ First Class Mail ☐ Certified Mail ☐ Hand Delivery

2. Name: **INLAND WETLANDS COMMISSION**
   Address: **761 Old Main St.**
   City/Town: **Rocky Hill** State: **CT** Zip Code: **06067**
   Business Phone: **860-258-2766** ext.
   Email:
   Date of Service:
   Type of Service: ☐ First Class Mail ☐ Certified Mail ☐ Hand Delivery

3. Name: **PLANNING AND ZONING COMMISSION**
   Address: **761 Old Main St.**
   City/Town: **Rocky Hill** State: **CT** Zip Code: **06067**
   Business Phone: **860-258-2766** ext.
   Email:
   Date of Service:
   Type of Service: ☐ First Class Mail ☐ Certified Mail ☐ Hand Delivery

4. Name:
   Address:
   City/Town: State: Zip Code:
   Business Phone: ext.
   Email:
   Date of Service:
   Type of Service: ☐ First Class Mail ☐ Certified Mail ☐ Hand Delivery

☐ Check here if additional sheets are necessary, and label and attach them to this sheet.

Part VI: Supporting Documents

Check the applicable box below for each attachment being submitted with this request. When submitting any supporting documents, please label the documents as indicated in this part (e.g., Attachment A, etc.) and be sure to include the requester's name as indicated on this request. ***In order to file electronically, ALL supporting documents must be submitted in an electronic format on a CD with this original completed application in hard copy.***

☒	Attachment A:	Location Map: A depiction, on an 8.5" x 11" copy of the relevant portion of the most recent version of the United States Geologic Survey topographic map (Scale 1:24,000), of the exact location of the property at which such activity will be conducted.
☒	Attachment B:	Site plan pursuant Section 4(c) (2) (I) of the subject general permit.
☐	Attachment C:	*Coastal Consistency Review Form* (DEP-APP-004), if applicable
☒	Attachment D:	Copy of the completed *Request for NDDB State Listed Species Review Form* (DEP-APP-007) and the NDDB response, if applicable.
☐	Attachment E:	Conservation or Preservation Restriction Information, if applicable.
☒	Attachment F:	A copy of the Category 2 approval letter from the Army Corps of Engineers, or a copy of the Appendix 1A: Category 1 Certification Form filed with the US Army Corps of Engineers, if applicable.
☐	Attachment G:	Drainage Maintenance Plan, Trail Maintenance Plan, Boat Launch Maintenance Plan, or Beach Maintenance Plan for Inland Beaches as defined in Section 2 of the subject general permit, if applicable.
☒	Attachment H:	Other information provided by requester (list): **Concurrence from Fisheries, Hydraulics Analysis Report Cover Page**

Part VII: Requester Certification

The requester *and* the individual(s) responsible for actually preparing the request must sign this part. A request will be considered incomplete unless all required signatures are provided. If the requester is the preparer, please mark N/A in the spaces provided for the preparer.

"I have personally examined and am familiar with the information submitted in this document and all attachments thereto, and I certify that based on reasonable investigation, including my inquiry of the individuals responsible for obtaining the information, the submitted information is true, accurate and complete to the best of my knowledge and belief.

I certify that this general permit request for authorization is on complete and accurate forms as prescribed by the commissioner without alteration of the text.

I understand that the subject activity is authorized only on or after the date the commissioner issues a written approval of registration with respect to such activity.

I certify that a complete copy of this request for authorization, including all documents attached thereto, was sent by regular or certified mail or was hand delivered to the municipal wetlands agency, zoning commission, planning commission or combined planning and zoning commission, and conservation commission of each municipality which is or may be affected by the subject activity.

I understand that a false statement in the submitted information may be punishable as a criminal offense, in accordance with section 22a-6 of the General Statutes, pursuant to section 53a-157b of the General Statutes, and in accordance with any other applicable statute."

Thomas J. Maziarz	10-2-2015
Signature of Requester	Date
Thomas J. Maziarz	**Bureau Chief, Policy and Planning**
Name of Requester (print or type)	Title (if applicable)
Bao Chuong	9/24/15
Signature of Preparer (if different than above)	Date
Bao K. Chuong	**Project Engineer, Bridge Design**
Name of Preparer (print or type)	Title (if applicable)

☐ Check here if additional signatures are required. If so, please reproduce this sheet and attach signed copies to this sheet. You must include signatures of any person preparing any report or parts thereof required in this registration (i.e., professional engineers, surveyors, soil scientists, consultants, etc.)

Note: Please submit this completed Request for Authorization, Fee, and all Supporting Documents to:

CENTRAL PERMIT PROCESSING UNIT
DEPARTMENT OF ENERGY AND ENVIRONMENTAL PROTECTION
79 ELM STREET
HARTFORD, CT 06106-5127

You must submit a complete copy of this completed request for authorization, including supporting documents, to the municipal wetlands agency, zoning commission, planning commission or combined planning and zoning commission, and conservation commission of each municipality which is or may be affected by the subject activity.

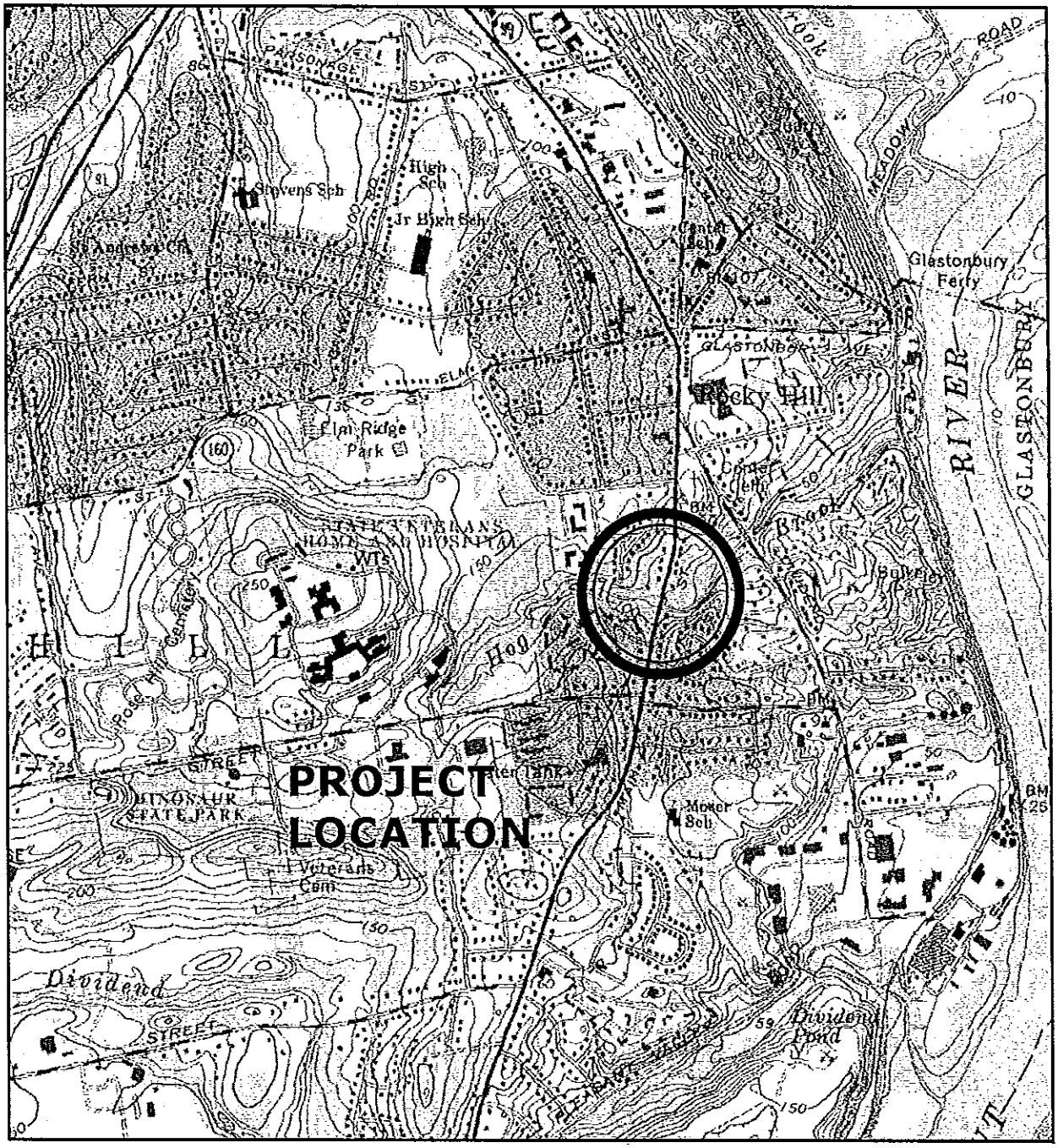

SCALE 1:24 000

1 ½ 0 1 MILE

1000 0 1000 2000 3000 4000 5000 6000 7000 FEET

1 .5 0 1 KILOMETER

QUADRANGLE NO. 52

CONTOUR INTERVAL 10 FEET
NATIONAL GEODETIC VERTICAL DATUM OF 1929

STATE PROJECT NO.: 118-166
REPLACEMENT OF BRIDGE NOS. 02102 AND 04179 CARRYING ROUTE 99 OVER HOG BROOK
COUNTY: HARTFORD

CITY/TOWN: ROCKY HILL

APPLICATION BY:
STATE OF CONNECTICUT
DEPARTMENT OF TRANSPORTATION

OFFICE OF ENGINEERING

DATE:

ATTACHMENT A

GENERAL NOTES:

1. THESE PLANS ARE INTENDED ONLY FOR EROSION AND SEDIMENTATION CONTROL PURPOSES. FOR ALL OTHER PLANIMETRIC INFORMATION REFER TO THE BRIDGE CONSTRUCTION PLANS.
2. THE CONTRACTOR SHALL PREPARE EROSION AND SEDIMENTATION CONTROL PLANS BASED ON THESE CONTRACT DRAWINGS AND IN ACCORDANCE WITH SECTION 1.10 ENVIRONMENTAL, INCLUDING BEST MANAGEMENT PRATICES. AS SPECIFIED, THE PLANS SHALL BE CONSISTENT IN ALL RESPECTS WITH THE 2002 CONNECTICTUT GUIDELINES FOR SOIL EROSION AND SEDIMENTATION CONTROL, AND WITH CONNDOT'S ON-SITE MITIGATION FOR CONSTRUCTION ACTIVITIES. THE PLANS SHALL INCLUDE DETAILS OF THE PROPOSED SYSTEMS.
3. IN ALL CASES, THE CONTRACTOR SHALL IMPLEMENT STABILIZATION MEASURES AS SOON AS POSSIBLE AFTER ANY SOIL DISTURBANCE. WHERE CONSTRUCTION ACTIVITIES HAVE BEEN PERMANENTLY CEASED OR HAVE TEMPORARILY BEEN SUSPENDED FOR MORE THAN SEVEN DAYS, STABILIZATION PRACTICES SHALL BE IMPLEMENTED WITHIN THREE DAYS. TEMPORARY STABILIZATION MEASURES MAY INCLUDE MULCHING AND TRACKING AND SHALL BE PAID FOR AT THE CONTRACT UNIT PRICE PER SQUARE YARD FOR "TEMPORARY SEEDING".
4. ALL EXISTING AND PROPOSED STORMWATER DRAINAGE WITHIN THE PROJECT LIMITS THAT WILL REMAIN IN USE UPON PROJECT COMPLETION SHALL BE CLEANED IN ACCORDANCE WITH SECTION 6.53.
5. FOR A DESCRIPTION OF THE WATERCOURSES, WETLANDS AND WETLAND SOILS SEE RELEVANT SECTIONS OF THE PERMIT APPLICATION.

ENVIRONMENTAL PERMIT PLANS

STATE PROJECT NO. 118-166

REPLACEMENT OF BRIDGE NOS. 02102 AND 04179

CARRYING ROUTE 99 OVER HOG BROOK

TOWN OF ROCKY HILL

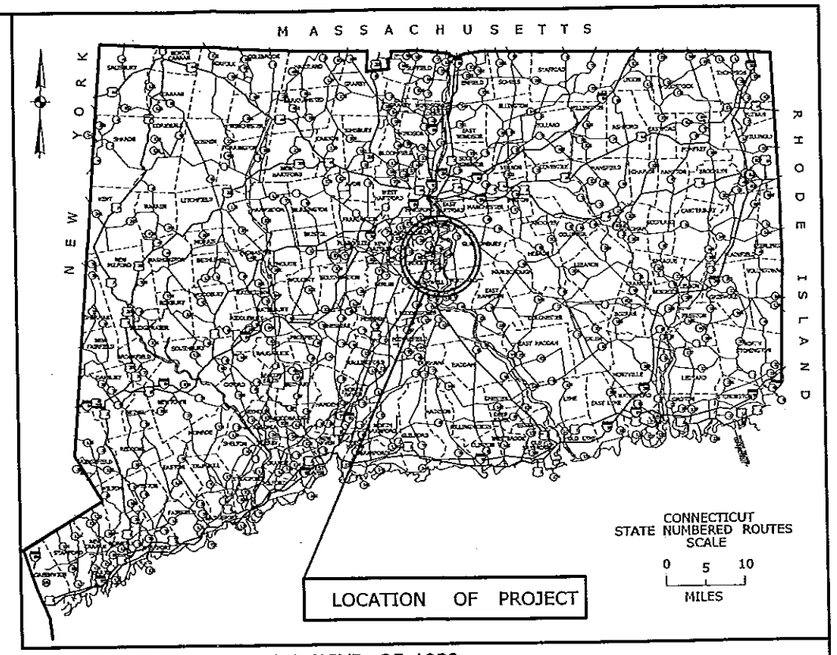

ALL ELEVATIONS BASED ON NGVD OF 1929
COORDINATES BASED ON CONNECTICUT COORDINATE SYSTEM NAD 1983

PROJECT LOCATION

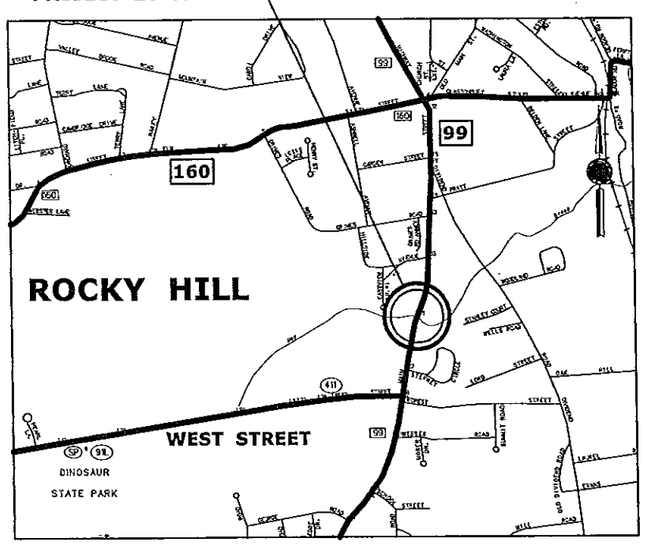

LOCATION MAP
SCALE 1"=1000'

WETLAND SITE

INDEX SHEET OF WETLAND SITES
SCALE 1"=1000'

PROJECT LOCATION

USGS QUADRANGLE TOPOGRAPHIC MAP
USGS QUAD MAP NO. 52
HARTFORD SOUTH QUADRANGLE
7.5 MINUTE SERIES
SCALE 1"=1000'

ATTACHMENT B

DEPARTMENT OF ENVIRONMENTAL PROTECTION PLAN REVISION BLOCK

WETLAND SITE NO.	APPLICANT NAME	ORIGINAL SUBMISSION DATE	REVISION DATE	REVISION DESCRIPTION	REVISION NUMBER

REV.	DATE	REVISION DESCRIPTION	SHEET NO.
-	-	-	-
-	-	-	-
-	-	-	-
-	-	-	-
-	-	-	-
-	-	-	-

THE INFORMATION, INCLUDING ESTIMATED QUANTITIES OF WORK, SHOWN ON THESE SHEETS IS BASED ON LIMITED INVESTIGATIONS BY THE STATE AND IS IN NO WAY WARRANTED TO INDICATE THE CONDITIONS OF ACTUAL QUANTITIES OF WORK WHICH WILL BE REQUIRED.

Plotted Date: 7/23/2015

DESIGNER/DRAFTER: ZMK
CHECKED BY: BKC
SCALE AS NOTED

STATE OF CONNECTICUT
DEPARTMENT OF TRANSPORTATION

Filename: ...\S8.118.166.P-01.Attachment_B_Title_Sheet.dgn

SIGNATURE/BLOCK: OFFICE OF ENGINEERING
APPROVED BY:

PROJECT TITLE: REPLACEMENT OF BRIDGE NOS. 02102 AND 04179 CARRYING ROUTE 99 OVER HOG BROOK

TOWN: ROCKY HILL

DRAWING TITLE: ENVIRONMENTAL PERMIT PLAN

PROJECT NO. 118-166
DRAWING NO. P-01
SHEET NO.

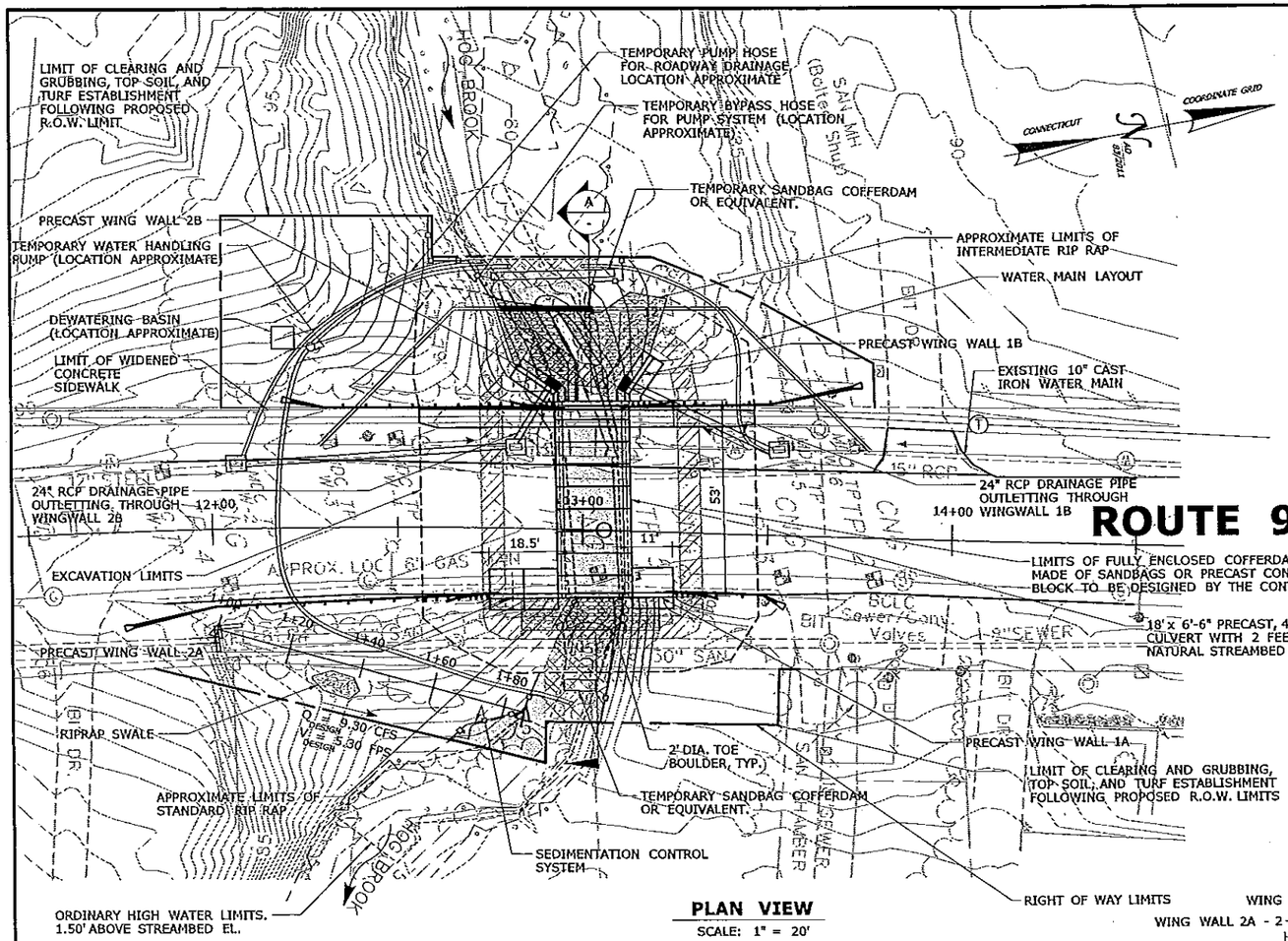

PLAN VIEW

SCALE: 1" = 20'

WETLAND IMPACT AREAS (ABOVE O.H.W. LEVEL)	
TEMPORARY (S.F.)	235
PERMANENT (S.F.)	565
TOTAL (S.F.)	800

STREAM IMPACT AREAS (BELOW O.H.W. LEVEL)	
TEMPORARY (S.F.)	270
PERMANENT (S.F.)	1535
TOTAL (S.F.)	1805

TOTAL WETLAND + STREAM IMPACT AREA = 2605 (S.F.)

TEMPORARY WETLAND IMPACT

PERMANENT WETLAND IMPACT

WATER HANDLING NOTES:

1. PUMP SYSTEM MUST BE ABLE TO BYPASS A MINIMUM CAPACITY OF 4 TIMES THE AVERAGE SPRING FLOW (9.2 CFS).
2. A SECONDARY SPARE PUMP WITH A FLOAT SWITCH SHALL BE PROVIDED BY THE CONTRACTOR.
3. ALL WORK RELATING TO WATER HANDLING SHALL BE INCLUDED UNDER THE PAY ITEM "HANDLING WATER" (SEE SPECIAL PROVISIONS).
4. APPROXIMATE FINAL TOP AND BOTTOM TEMPORARY SANDBAG COFFERDAM ELEVATIONS GIVEN ON DRAWING NO. S-5.

NOTES:

ROADWAY WILL BE CLOSED FOR A PERIOD OF ONE WEEK DURING NEW STRUCTURE PLACEMENT. CONTRACTOR IS ALLOWED TO USE CLOSED ROADWAY FOR STAGING PURPOSES.

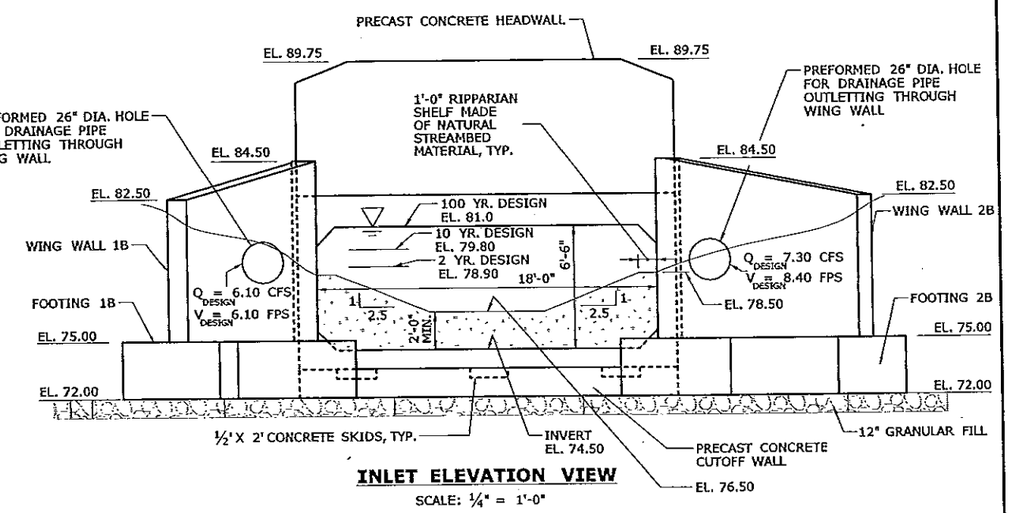

INLET ELEVATION VIEW

SCALE: ¼" = 1'-0"

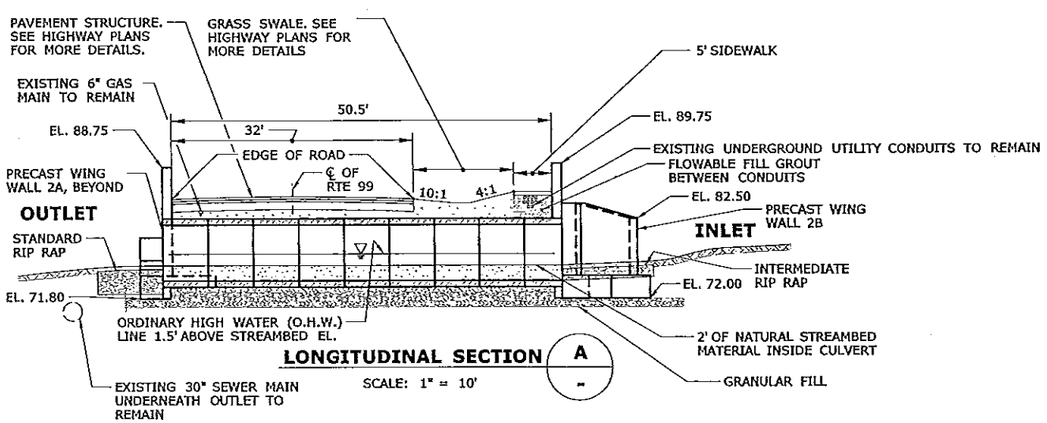

LONGITUDINAL SECTION A

SCALE: 1" = 10'

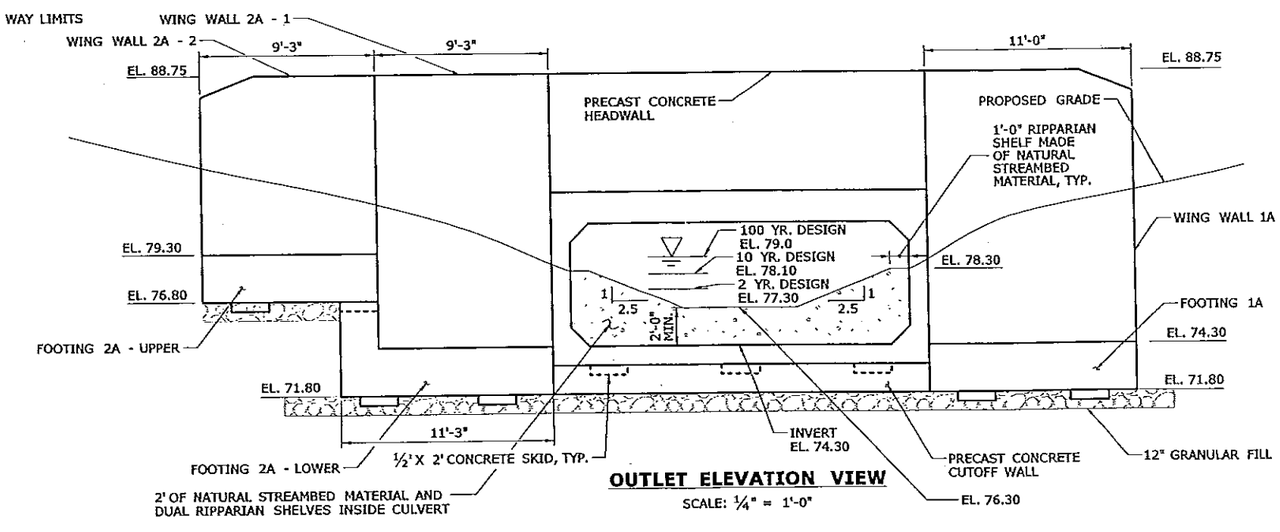

OUTLET ELEVATION VIEW

SCALE: ¼" = 1'-0"

REV.	DATE	REVISION DESCRIPTION	SHEET NO.
-	-	-	-
-	-	-	-
-	-	-	-
-	-	-	-
-	-	-	-
-	-	-	-

THE INFORMATION, INCLUDING ESTIMATED QUANTITIES OF WORK, SHOWN ON THESE SHEETS IS BASED ON LIMITED INVESTIGATIONS BY THE STATE AND IS IN NO WAY WARRANTED TO INDICATE THE CONDITIONS OF ACTUAL QUANTITIES OF WORK WHICH WILL BE REQUIRED.

Plotted Date: 9/24/2015

DESIGNER/DRAFTER: ZMK

CHECKED BY: BKC

SCALE AS NOTED

STATE OF CONNECTICUT
DEPARTMENT OF TRANSPORTATION

Filename: ...\S8.118-166.P-02.Bridge No.02102.Environmental Permit Plan.dgn

SIGNATURE/BLOCK: OFFICE OF ENGINEERING

APPROVED BY:

PROJECT TITLE: REPLACEMENT OF BRIDGE NOS. 02102 AND 04179 ON ROUTE 99 OVER HOG BROOK

TOWN: ROCKY HILL

DRAWING TITLE: ENVIRONMENTAL PERMIT PLAN

PROJECT NO. 118-166

DRAWING NO. ENVE-02

SHEET NO.

118-166

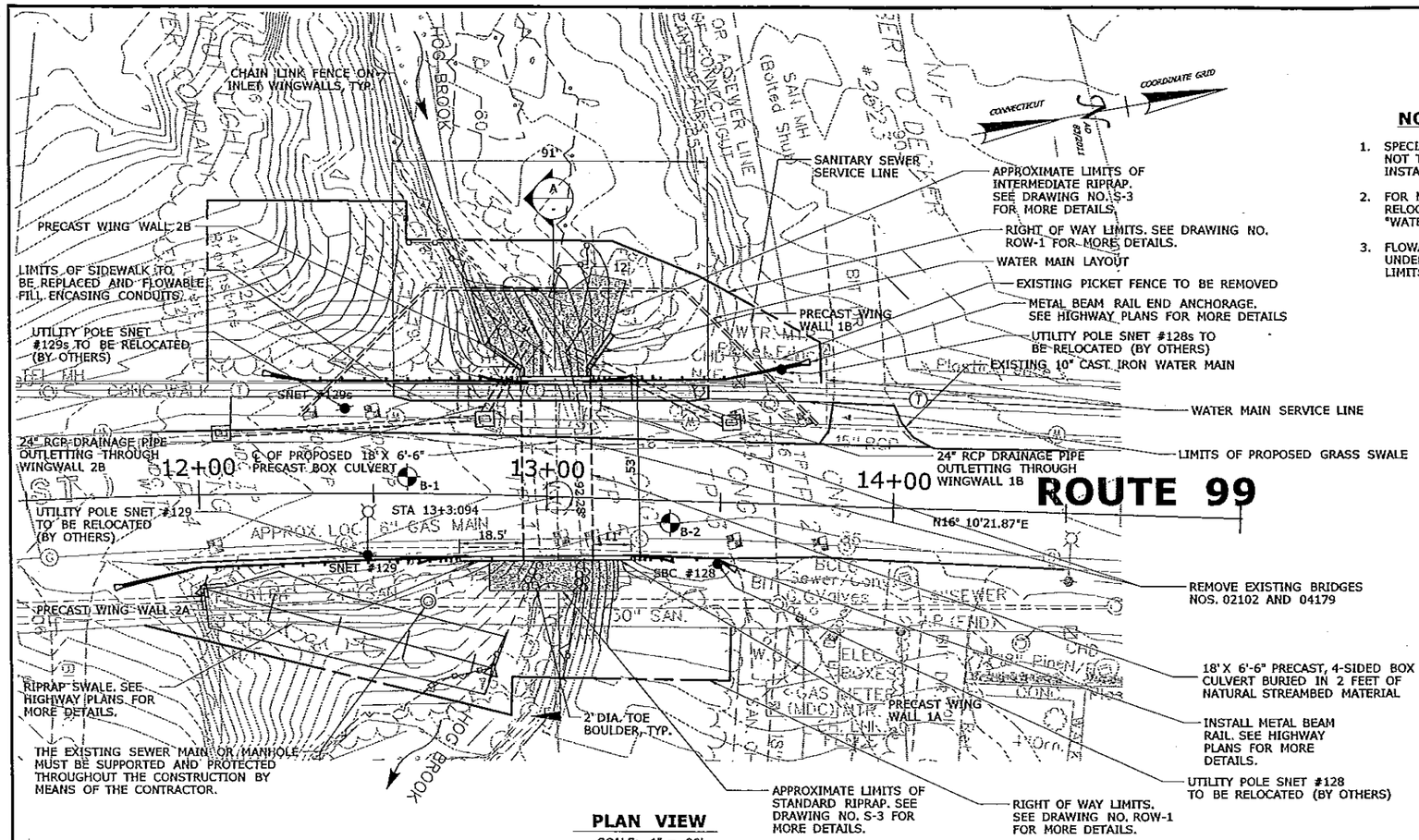

PLAN VIEW

SCALE: 1" = 20'

NOTES

1. SPECIAL PRECAUTIONS MUST BE TAKEN NOT TO DAMAGE ANY UTILITIES WHILE INSTALLING MBR POSTS AND ANCHORAGE.
2. FOR MORE DETAILS ON WATER MAIN RELOCATION, SEE MDC PLAN ENTITLED "WATER MAIN RELOCATION PLAN".
3. FLOWABLE FILL SHALL BE PLACED AROUND UNDERGROUND CONDUITS UNDER THE LIMITS OF THE PROPOSED SIDEWALK

DESCRIPTION OF WORK

1. CLEARING AND GRUBBING
2. INSTALL COFFERDAMS AND WATER HANDLING SYSTEM
3. RELOCATE MDC WATER MAIN UNDER INLET
4. CLOSE ROAD/DETOUR TRAFFIC
5. SUPPORT EXISTING GAS MAIN AND AT&T CONDUITS
6. OPEN EXCAVATE DOWN TO ELEVATION SHOWN ON PLANS
7. REMOVE EXISTING STRUCTURES BRIDGE NO. 02102 AND NO. 04179.
8. PLACE 1' OF GRANULAR FILL AND INSTALL CONCRETE SKIDS.
9. INSTALL CULVERT SECTIONS USING SKIDS TO SLIDE SECTIONS UNDER EXISTING UTILITIES. BACKFILL AS NEEDED
10. BACKFILL TO PROPOSED GRADE.
11. REMOVE TEMPORARY SUPPORT FOR UTILITIES.
12. INSTALL 2' OF NATURAL STREAMBED MATERIAL INSIDE CULVERT AND RIP-RAP AT THE INLET AND OUTLET.
13. REMOVE COFFERDAMS AND WATER HANDLING SYSTEM.
14. INSTALL PAVEMENT, RAILS, AND PERMANENT MARKINGS.
15. REOPEN TRAFFIC
16. CONSTRUCT RIP RAP SWALE NEAR OUTLET
17. PLACE TOPSOIL, ESTABLISH TURF
18. RELOCATE UTILITY POLES TO FINAL LOCATIONS

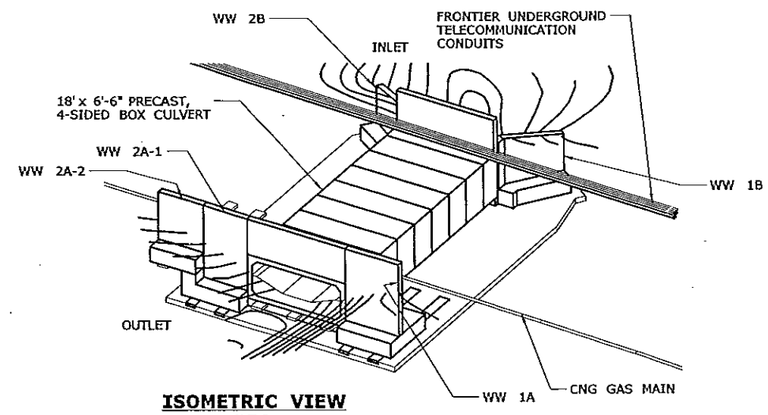

ISOMETRIC VIEW

N.T.S.

INSPECTION OF FIELD WELDS		
METHOD	UNIT	AMOUNT
ULTRASONIC	IN.	
MAGNETIC PARTICLE	L.F.	

BRIDGE NO. 02102--PRELIMINARY FREQUENCY/DISCHARGES						
FREQUENCY	AVE. SPRING	2-YR	10-YR	25-YR	50-YR	100-YR
DISCHARGE (CFS)	2.3	130	295	385	470	555

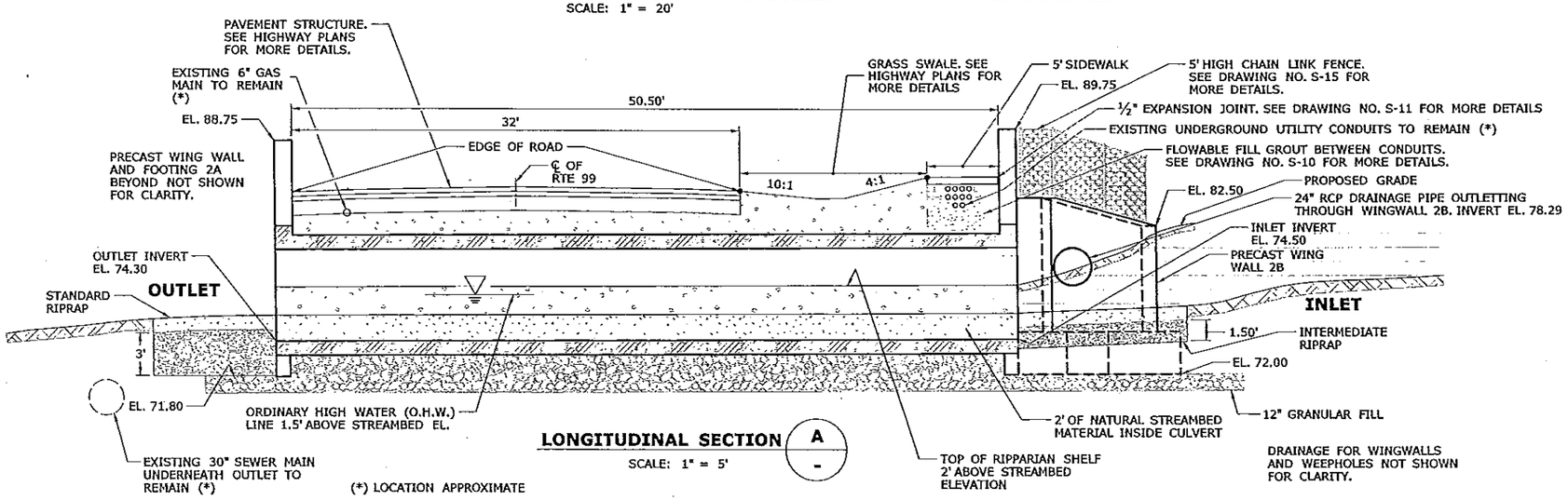

LONGITUDINAL SECTION A

SCALE: 1" = 5'

(*) LOCATION APPROXIMATE

NOTICE TO BRIDGE INSPECTORS

THE DEPARTMENT'S BRIDGE SAFETY PROCEDURES REQUIRE THIS BRIDGE TO BE INSPECTED FOR, BUT NOT LIMITED TO, ALL APPROPRIATE COMPONENTS INDICATED IN THE GOVERNING MANUALS FOR BRIDGE INSPECTION. ATTENTION MUST BE GIVEN TO INSPECTING THE FOLLOWING SPECIAL COMPONENTS AND DETAILS. (THE LISTING FOR COMPONENTS FOR SPECIFIC ATTENTION SHALL NOT BE CONSTRUED TO REDUCE THE IMPORTANCE OF INSPECTION OF ANY OTHER COMPONENT OF THE STRUCTURE). THE FREQUENCY OF INSPECTION OF THIS STRUCTURE SHALL BE IN ACCORDANCE WITH THE GOVERNING MANUALS FOR BRIDGE INSPECTION, UNLESS OTHERWISE DIRECTED BY THE MANAGER OF BRIDGE SAFETY AND EVALUATION.

COMPONENT OR DETAIL	BRIDGE SHEET REFERENCE
FOLLOW NORMAL INSPECTION PROCEDURES	-
-	-

REV.	DATE	REVISION DESCRIPTION	SHEET NO.
-	-	-	-
-	-	-	-
-	-	-	-
-	-	-	-
-	-	-	-
-	-	-	-

THE INFORMATION, INCLUDING ESTIMATED QUANTITIES OF WORK, SHOWN ON THESE SHEETS IS BASED ON LIMITED INVESTIGATIONS BY THE STATE AND IS IN NO WAY WARRANTED TO INDICATE THE CONDITIONS OF ACTUAL QUANTITIES OF WORK WHICH WILL BE REQUIRED.

Plotted Date: 9/24/2015

DESIGNER/DRAFTER: ZMK
CHECKED BY: BKC
SCALE AS NOTED

STATE OF CONNECTICUT
DEPARTMENT OF TRANSPORTATION

Filename: ...\S8.118-166.S-2.Bridge No.02102.General Plan.dgn

SIGNATURE/BLOCK: OFFICE OF ENGINEERING
APPROVED BY:

PROJECT TITLE: REPLACEMENT OF BRIDGE NOS. 02102 AND 04179 ON ROUTE 99 OVER HOG BROOK

TOWN: ROCKY HILL

DRAWING TITLE: GENERAL PLAN

PROJECT NO. 118-166
DRAWING NO. S-2
SHEET NO.

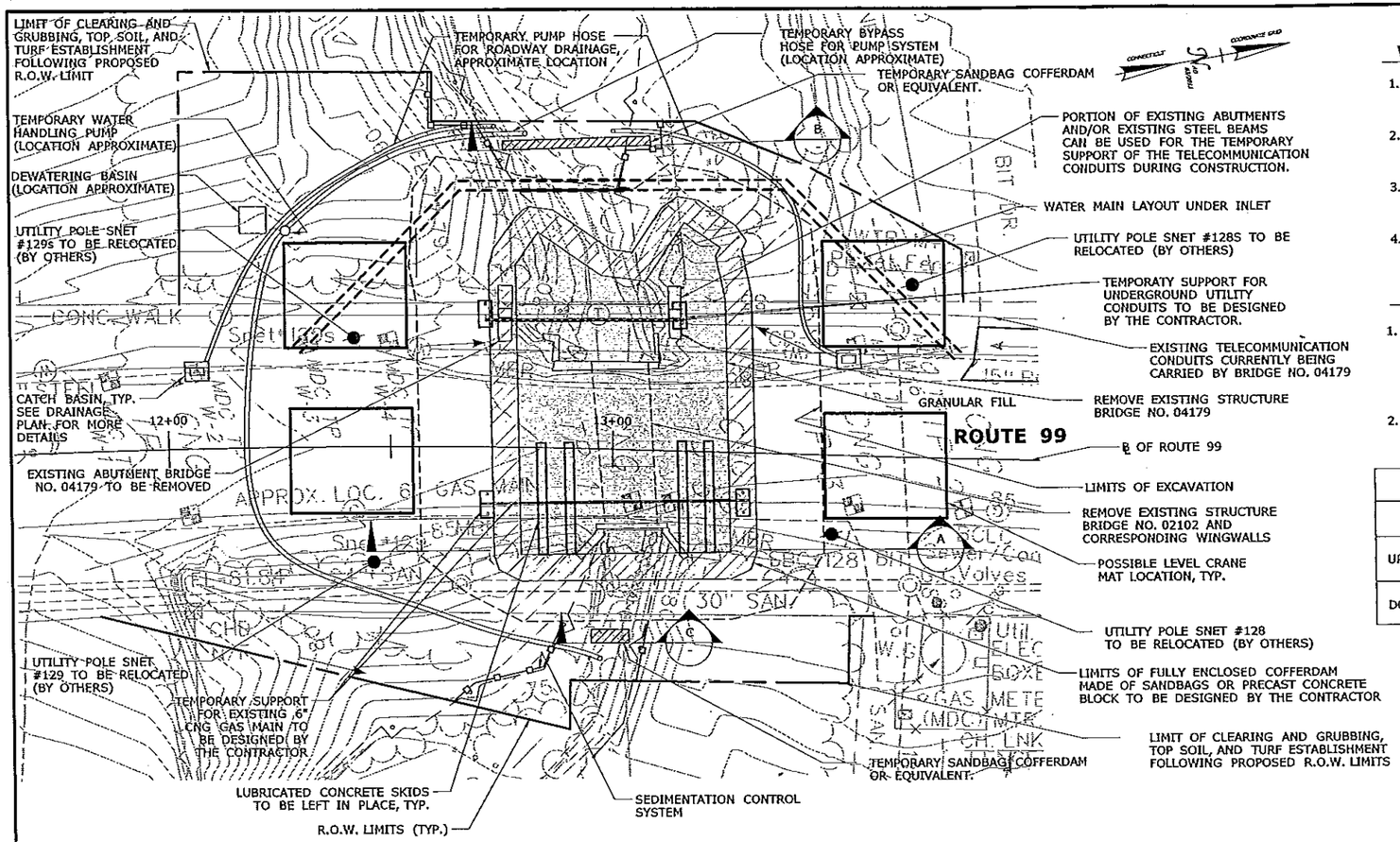

STAGE 1: RELOCATION OF UTILITIES, INSTALLATION OF WATER HANDLING SYSTEM, AND SITE EXCAVATION

SCALE: 1/16" = 1'-0"

WATER HANDLING NOTES:

1. PUMP SYSTEM MUST BE ABLE TO BYPASS A MINIMUM CAPACITY OF 4 TIMES THE AVERAGE SPRING FLOW (9.2 CFS).
2. A SECONDARY SPARE PUMP WITH A FLOAT SWITCH SHALL BE PROVIDED BY THE CONTRACTOR.
3. ALL WORK RELATING TO WATER HANDLING SHALL BE INCLUDED UNDER THE PAY ITEM "HANDLING WATER" (SEE SPECIAL PROVISIONS).
4. APPROXIMATE FINAL TOP AND BOTTOM TEMPORARY SANDBAG COFFERDAM ELEVATIONS GIVEN.

CONSTRUCTION NOTES:

1. TEMPORARY SUPPORT FOR EXISTING GAS MAIN AND UNDERGROUND TELECOMMUNICATION CONDUITS IS TO BE DESIGNED BY THE CONTRACTOR. UTILITIES MUST BE SUPPORTED THROUGHOUT THE ENTIRETY OF CONSTRUCTION UNTIL FINAL BACKFILL HAS TAKEN PLACE.
2. RELOCATED WATER MAIN MUST BE PROTECTED THROUGHOUT CONSTRUCTION.

SUGGESTED SEQUENCE OF CONSTRUCTION

STAGE 1

1. CLEARING AND GRUBBING AND INSTALLATION OF SEDIMENTATION CONTROL SYSTEM
2. INSTALL COFFERDAMS AND WATER HANDLING SYSTEM DESIGNED BY THE CONTRACTOR. PRIOR TO DETOURING TRAFFIC, THE TEMPORARY BYPASS HOSE SHALL BE RUN THROUGH EXISTING CULVERT.
3. RELOCATE 10" CAST IRON MDC WATER MAIN UNDERNEATH THE INLET. SEE MDC PLAN SHEETS FOR DETAILS. WORK TO BE DONE BY THE CONTRACTOR.
4. INSTALL THE CATCH BASINS OUTSIDE THE EXCAVATION LIMITS. SEE DRAINAGE PLAN FOR MORE DETAILS. INSTALL TEMPORARY DRAINAGE PUMPS OUT OF CATCH BASINS AS SHOWN ON THIS SHEET.
5. CLOSE ROAD AND DETOUR TRAFFIC.
6. EXCAVATE EARTH, SUPPORT GAS MAIN OVER BRIDGE NO. 02102 AND UNDERGROUND UTILITY CONDUITS BEING CARRIED BY PEDESTRIAN BRIDGE NO. 04179. RELOCATE TEMPORARY BYPASS HOSE TO APPROXIMATE LOCATION AS SHOWN ON PLANS.
7. REMOVE EXISTING STRUCTURES, METAL BEAM RAIL, AND ANY APPURTENANCES.
8. PLACE 1' OF GRANULAR FILL
9. INSTALL STAY-IN-PLACE CONCRETE SKIDS TO BE USED FOR THE PLACEMENT OF THE OUTLET SIDE FOOTINGS.

DESIGN STORM ELEVATIONS

	2 - YEAR	10 - YEAR	100 - YEAR
UPSTREAM	78.90	79.80	81.00
DOWNSTREAM	77.30	78.10	79.00

BRIDGE NO. 02102--PRELIMINARY FREQUENCY/DISCHARGES

FREQUENCY	AVE. SPRING	2-YR	10-YR	25-YR	50-YR	100-YR
DISCHARGE (CFS)	2.3	130	295	385	470	555

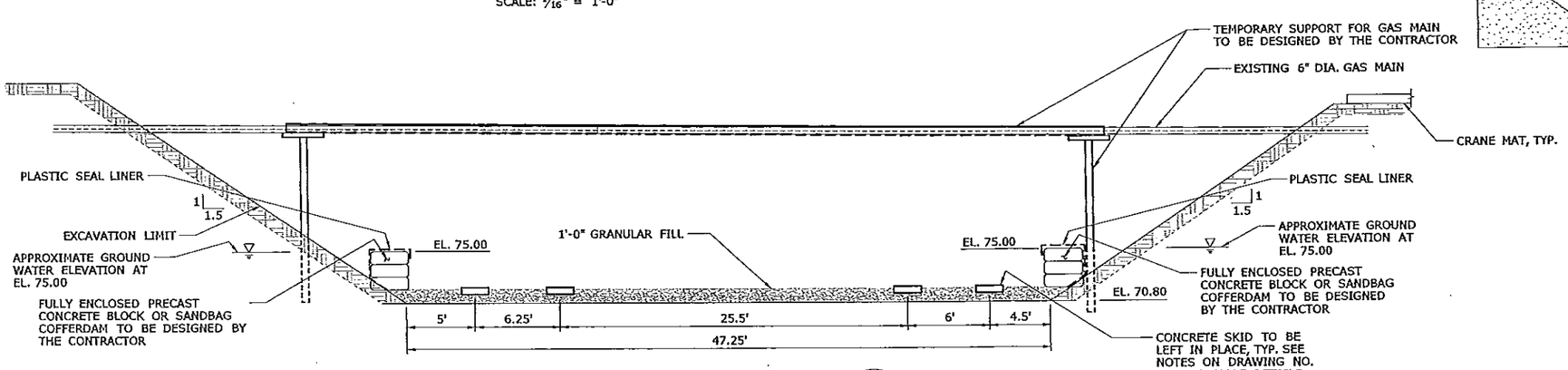

OUTLET ELEVATION VIEW (A / -)

SCALE: 1" = 5'

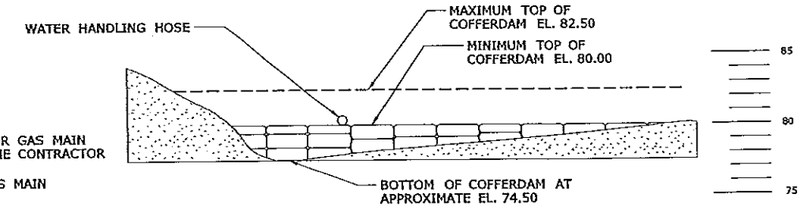

SECTION - INLET COFFERDAM (B / -)

SCALE: 3/16" = 1'-0"

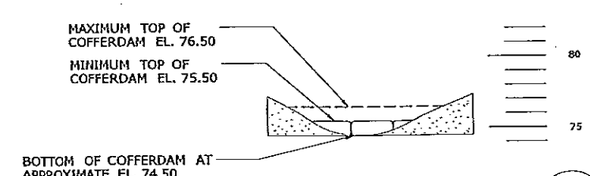

SECTION - OUTLET COFFERDAM (C / -)

SCALE: 3/16" = 1'-0"

FINAL DESIGN REVIEW

REV.	DATE	REVISION DESCRIPTION	SHEET NO.

118-166

THE INFORMATION, INCLUDING ESTIMATED QUANTITIES OF WORK, SHOWN ON THESE SHEETS IS BASED ON LIMITED INVESTIGATIONS BY THE STATE AND IS IN NO WAY WARRANTED TO INDICATE THE CONDITIONS OF ACTUAL QUANTITIES OF WORK WHICH WILL BE REQUIRED.

Plotted Date: 9/24/2015

DESIGNER/DRAFTER: ZMK
CHECKED BY: BKC
SCALE AS NOTED

STATE OF CONNECTICUT
DEPARTMENT OF TRANSPORTATION

Filename: ...\S8.118-166.S-5.Bridge No.02102.Construction Sequence - 1.dgn

SIGNATURE/BLOCK: OFFICE OF ENGINEERING
APPROVED BY:

PROJECT TITLE: REPLACEMENT OF BRIDGE NO. 02102 AND 04179 ON ROUTE 99 OVER HOG BROOK

TOWN: ROCKY HILL
-

DRAWING TITLE: SUGGESTED CONSTRUCTION SEQUENCE - 1

PROJECT NO. 118-166
DRAWING NO. S-5
SHEET NO.

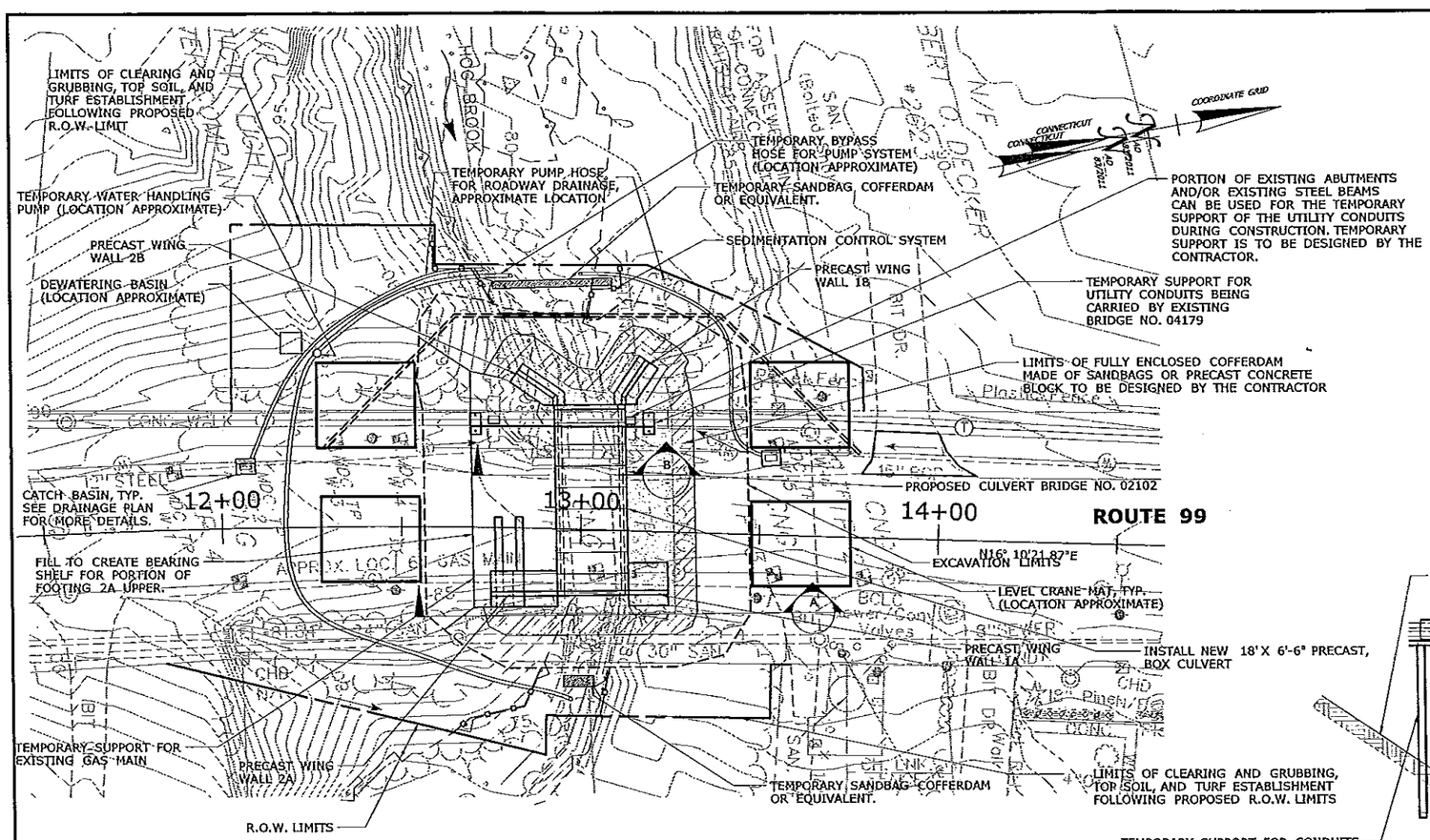

STAGE 2: INSTALLATION OF BOX CULVERT STRUCTURE

SCALE: 1" = 20'

SUGGESTED CONSTRUCTION SEQUENCE

STAGE 2

1. INSTALL OUTLET WINGWALL FOOTINGS AND CUTOFF WALL USING LUBRICATED CONCRETE SKIDS. INSTALL ONLY "LOWER" PORTION OF FOOTING 2A.
2. DROP INLET WINGWALL FOOTINGS AND CUTOFF WALL INTO PLACE.
3. BACKFILL UP TO CUTOFF WALL TOP ELEVATION (EL. 72.5) WITH GRANULAR FILL AND PLACE FULL LENGTH CONCRETE SKIDS TO TO BE USED FOR THE PLACEMENT OF THE CULVERT SECTIONS.
4. INSTALL OUTLET END CULVERT SECTION BY SLIDING IT ON THE CONCRETE SKIDS UNDERNEATH THE EXISTING GAS MAIN.
5. INSTALL REMAINING CULVERT PIECES. SLIDE BOX SECTIONS UNDER EXISTING UTILITIES AS NECESSARY.
6. INSTALL PRECAST WINGWALLS AND PARAPET SECTIONS. BACKFILL LOCALLY AS NEEDED AT THE INLET AND OUTLET.
7. BACKFILL ON SOUTHERN SIDE OF CULVERT FOR THE INSTALLATION OF THE "UPPER" PORTION OF FOOTING 2A.
8. PLACE A 1' LAYER OF GRANULAR FILL UNDERNEATH PROPOSED LOCATION OF THE "UPPER" PORTION OF FOOTING 2A. INSTALL FOOTING SKIDS.
9. INSTALL "UPPER" PORTION OF FOOTING 2A AND CORRESPONDING WINGWALL.

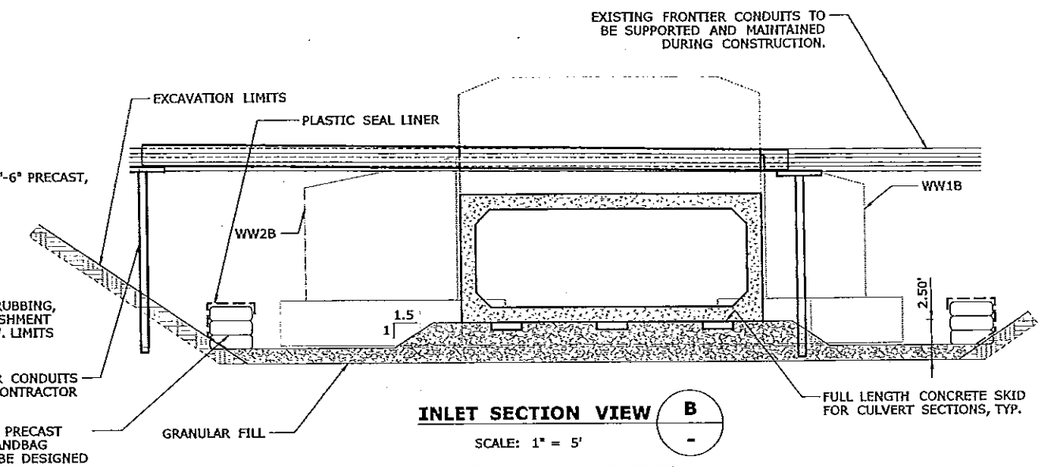

INLET SECTION VIEW (B / -)

SCALE: 1" = 5'

CONCRETE SKID NOTES:

1. CONCRETE SKIDS ARE TO BE DESIGNED BY CONTRACTOR. RECOMMENDED LOCATIONS SHOWN.
2. SKIDS ALONG WITH THE BOTTOM FACE OF THE CULVERT SECTION MUST BE LUBRICATED TO ALLOW FOR THE CULVERT PIECES TO BE SLID ON SKIDS UNDER EXISTING UTILITIES.
3. NO SKIDS ARE NEEDED FOR THE PLACEMENT OF INLET WING WALLS 1B AND 2B.
4. PAYMENT FOR THE SKIDS USED TO INSTALL CULVERT SECTIONS SHALL BE PAID FOR UNDER THE ITEM "18' X 6'-6" PRECAST CONCRETE BOX CULVERT". SEE SPECIAL PROVISION FOR MORE DETAILS.
5. PAYMENT FOR THE SKIDS USED TO INSTALL WING WALL FOOTINGS SHALL BE PAID FOR UNDER THE ITEM "PRECAST CONCRETE WALLS". SEE SPECIAL PROVISION FOR MORE DETAILS.

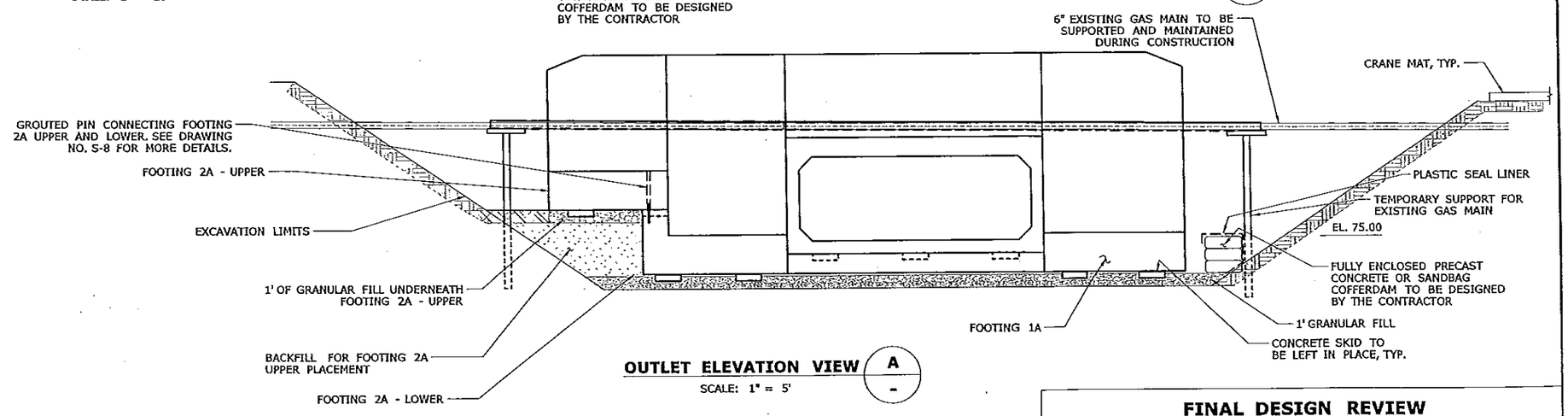

OUTLET ELEVATION VIEW (A / -)

SCALE: 1" = 5'

FINAL DESIGN REVIEW

REV.	DATE	REVISION DESCRIPTION	SHEET NO.

THE INFORMATION, INCLUDING ESTIMATED QUANTITIES OF WORK, SHOWN ON THESE SHEETS IS BASED ON LIMITED INVESTIGATIONS BY THE STATE AND IS IN NO WAY WARRANTED TO INDICATE THE CONDITIONS OF ACTUAL QUANTITIES OF WORK WHICH WILL BE REQUIRED.

Plotted Date: 9/24/2015

DESIGNER/DRAFTER: ZMK
CHECKED BY: BKC
SCALE AS NOTED

STATE OF CONNECTICUT
DEPARTMENT OF TRANSPORTATION

Filename: ...\SB.118-166_S-6.Bridge No.02102_Construction Sequence - 2.dgn

SIGNATURE/BLOCK: OFFICE OF ENGINEERING
APPROVED BY:

PROJECT TITLE: REPLACEMENT OF BRIDGES NO. 02102 AND 04179 ON ROUTE 99 OVER HOG BROOK

TOWN: ROCKY HILL
-

DRAWING TITLE: SUGGESTED CONSTRUCTION SEQUENCE - 2

PROJECT NO. 118-166
DRAWING NO. S-6
SHEET NO.

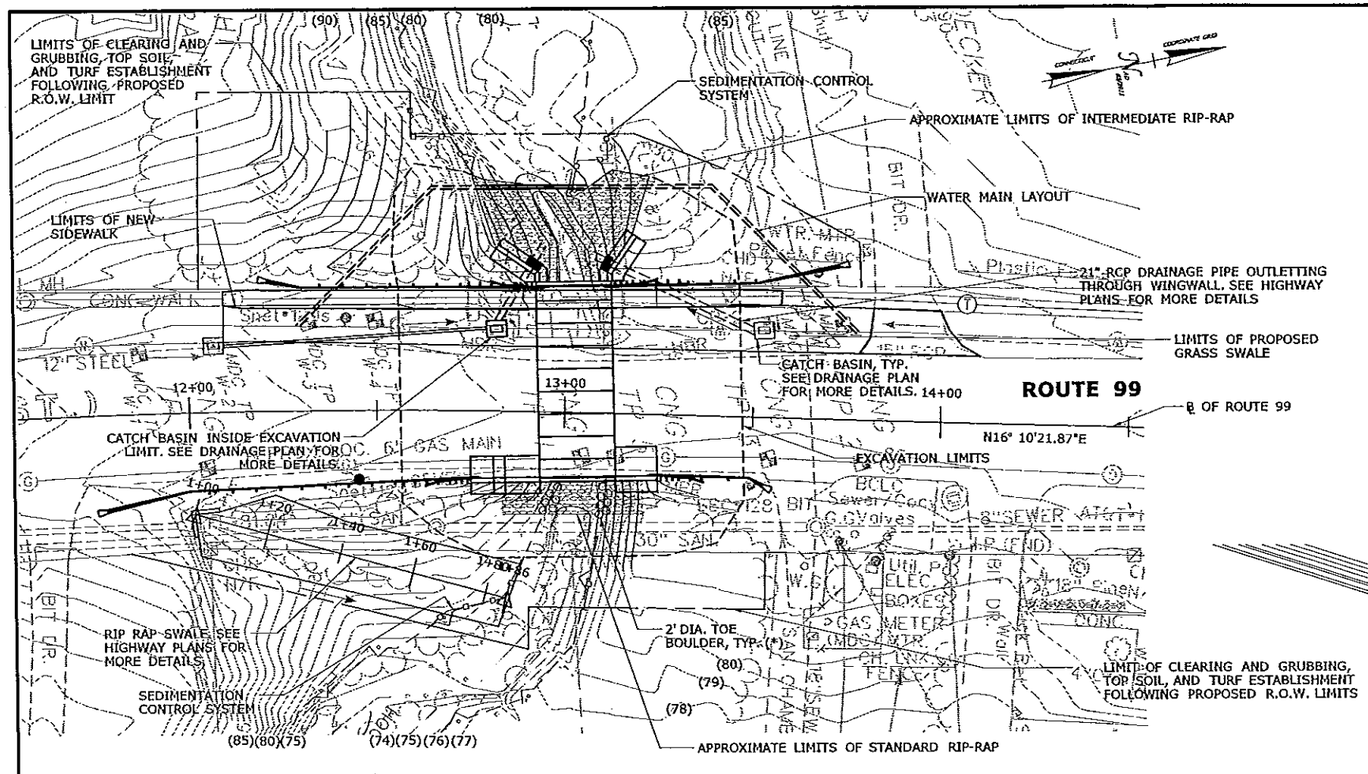

STAGE 3: BACKFILL, REMOVE WATER HANDLING, REOPEN TO TRAFFIC

SCALE: 1" = 20'

(*) INSTALLATION OF TOE BOULDERS SHALL BE DIRECTED IN THE FIELD BY CT DEEP FISHERIES OR DOT OEP STAFF.

SUGGESTED SEQUENCE OF CONSTRUCTION

STAGE 3

1. INSTALL FINAL CATCH BASIN THAT IS INSIDE EXCAVATION LIMIT, AND REMOVE TEMPORARY ROADWAY DRAINAGE.
2. INSTALL HIGHWAY DRAINAGE SYSTEMS OUTLETTING THROUGH INLET WINGWALLS
3. ADD THE 2 FEET OF NATURAL STREAMBED MATERIAL AND FORM DUAL RIPPARIAN SHELVES INSIDE CULVERT.
4. INSTALL RIP-RAP AND TOE BOULDERS WITHIN THE LIMITS SHOWN, REMOVE TEMPORARY SUPPORTS, FINISH BACKFILLING, AND GRADE GROUND SURFACE TO PROPOSED ELEVATIONS.
5. REMOVE COFFERDAMS AND WATER HANDLING SYSTEM.
6. PAVE ROAD, INSTALL RAILS AND PROTECTIVE FENCE.
7. ADD TEMPORARY PAVEMENT MARKINGS.
8. REOPEN TRAFFIC.
9. POUR FLOWABLE FILL SURROUNDING CONDUITS, REPLACE WIDENED SIDEWALK, PLACE TOPSOIL, ESTABLISH TURF, CREATE GRASS SWALE, LANDSCAPE, AND INSTALL PERMANENT PAVEMENT MARKINGS.
10. INSTALL RIPRAP SWALE COFFERDAM.
11. INSTALL RIPRAP SWALE. REMOVE COFFERDAM ONCE SWALE CONSTRUCTION IS COMPLETED.
12. REMOVE SEDIMENTATION CONTROL SYSTEM.
13. RELOCATE UTILITY POLES TO FINAL LOCATIONS.

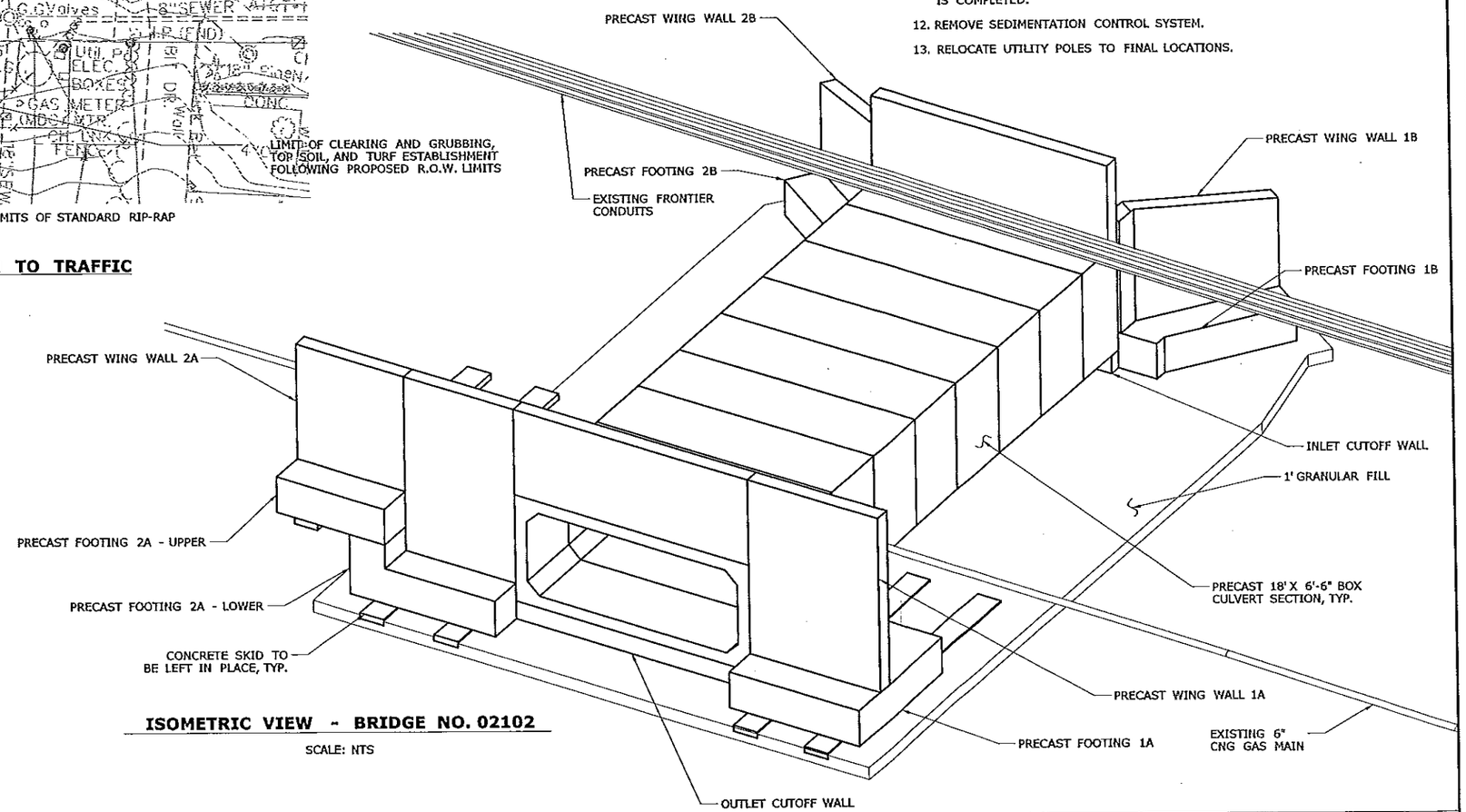

ISOMETRIC VIEW - BRIDGE NO. 02102

SCALE: NTS

FINAL DESIGN REVIEW

REV.	DATE	REVISION DESCRIPTION	SHEET NO.

THE INFORMATION, INCLUDING ESTIMATED QUANTITIES OF WORK, SHOWN ON THESE SHEETS IS BASED ON LIMITED INVESTIGATIONS BY THE STATE AND IS IN NO WAY WARRANTED TO INDICATE THE CONDITIONS OF ACTUAL QUANTITIES OF WORK WHICH WILL BE REQUIRED.

Plotted Date: 9/24/2015

DESIGNER/DRAFTER: ZMK
CHECKED BY: BKC
SCALE AS NOTED

STATE OF CONNECTICUT
DEPARTMENT OF TRANSPORTATION

Filename: ...\S8.118-166.S-7.Bridge No.02102.Construction Sequence - 3.dgn

SIGNATURE/BLOCK: OFFICE OF ENGINEERING
APPROVED BY:

PROJECT TITLE: REPLACEMENT OF BRIDGE NO. 02102 AND 04179 ON ROUTE 99 OVER HOG BROOK

TOWN: ROCKY HILL
-

DRAWING TITLE: SUGGESTED CONSTRUCTION SEQUENCE - 3

PROJECT NO. 118-166
DRAWING NO. S-7
SHEET NO.

118-166

09/24/2014

PROJECT 118-166
RT. 99 OVER HOG BROOK
ROCKY HILL
BRIDGE 02102
PROJECT DESCRIPTION

Bridge 02102 carries Rt. 99 (Main St.) over Hog Brook in Rocky Hill. It is located approximately 0.6 miles south of the junction with Route 160 (Elm St.). The existing structure is a single span bridge, approximately 13' long by 29' curb to curb, consisting of a masonry arch extended with a concrete slab on reinforced concrete abutments. Existing metal beam rail is installed on each approach along each side of the roadway, continuous across the bridge.

An independent, state owned, pedestrian bridge is located approximately 10' upstream of the existing bridge. The pedestrian bridge, Bridge 04179, constructed in 1947, consists of a 37' span reinforced concrete slab on two rolled steel beams founded on reinforced concrete abutments. It is frequently utilized by Veteran's home occupants from around the corner and currently carries a telephone utility.

Bridge 02102 was included on List 25 by Bridge Safety and Evaluation. Based on the current condition of the existing bridge, Bridge Safety and Evaluation recommended the structure be replaced.

The proposed project consists of replacing Bridge 02102 and pedestrian Bridge 04179 with a single structure. The new structure type has been determined to be an 18' x 7' precast, 4-sided box culvert buried 2' in natural streambed material with double riparian shelves. The design is utilizing Accelerated Bridge Construction (ABC) methods so all components, including wingwalls and footings, of the structure are to be fabricated prior to the road closure. The new structure will be constructed in the same location and alignment as the existing structure, but widened on the inlet end to include the pedestrian bridge. The sidewalk at the site location will be widened to 5' to adhere to ADA minimums.

Utility poles carrying overhead wires are located along each side of the road. The poles are owned by AT&T. The overhead facilities are owned by AT&T and CL&P. AT&T conduits are located below the sidewalk and carried by the pedestrian bridge. A 10" MDC water main is located beneath the brook at the inlet between the vehicular and pedestrian bridges. A 30" MDC sewer main is located beneath the brook at the outlet. A 6" CNG gas main is located underground in the northbound lane over the bridge. Above the 10" water main, between the two bridges, there is a 12" steel drainage pipe emptying into Hog Brook to the south, and a 15" RCP drainage pipe emptying into Hog Brook to the north.

Utility poles will be relocated in order to provide the Contractor construction access and proper deflection distance from the approach metal beam rail. The water main will be relocated upstream of the proposed structure. The conduits, gas main and sewer are to remain in place and be maintained and protected throughout the duration of construction.

A utility break out project will be established to relocate the utility poles and overhead facilities prior to construction. The water main will be relocated as part of the construction project.

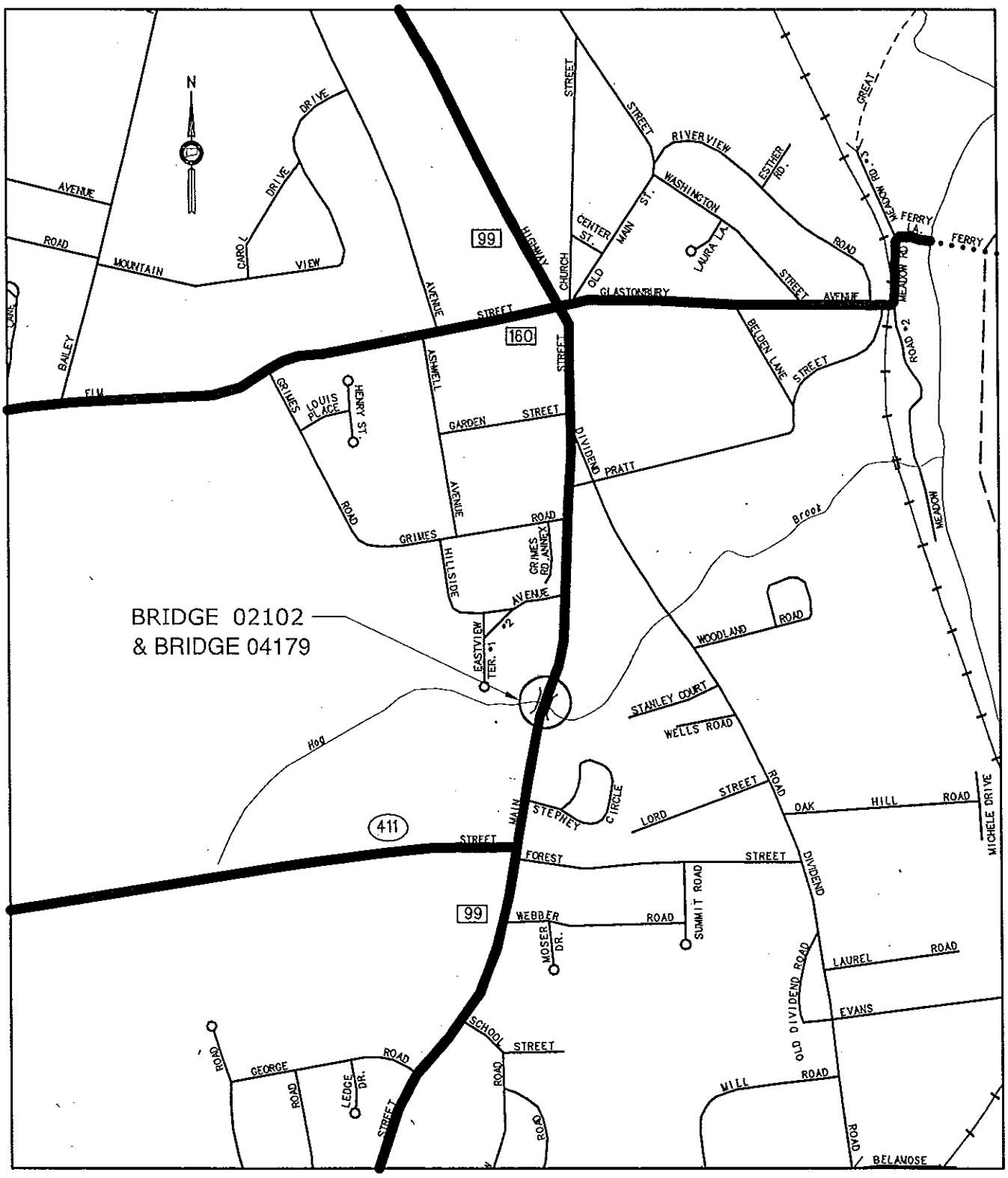

SCALE IN FEET

1000 0 1000 2000

STATE PROJECT NO.: 118-166	STATE OF CONNECTICUT DEPARTMENT OF TRANSPORTATION BRIDGE NO. 02102 RTE. 99 OVER HOG BROOK	OFFICE OF ENGINEERING	DATE: 07/03/2013
CITY/TOWN: ROCKY HILL			

Connecticut Department of
Energy & Environmental Protection
Bureau of Natural Resources
Wildlife Division

CPPU USE ONLY
App #: _____
Doc #: _____
Check #: No fee required
Program: Natural Diversity Database Endangered Species
Hardcopy _____ Electronic _____

Request for Natural Diversity Data Base (NDDB) State Listed Species Review

Please complete this form in accordance with the instructions (DEEP-INST-007) to ensure proper handling of your request.
There are no fees associated with NDDB Reviews.

Part I: Preliminary Screening & Request Type

Before submitting this request, you must review the most current Natural Diversity Data Base "State and Federal Listed Species and Significant Natural Communities Maps" found on the DEEP website. These maps are updated twice a year, usually in June and December.

Does your site, including all affected areas, fall in an NDDB Area according to the map instructions:

☒ Yes ☐ No **Enter the date** of the map reviewed for pre-screening: **December 2014**

This form is being submitted for a :

☒ *New* NDDB request ☐ *Renewal/Extension* of a NDDB Request, ***without** modifications and within **one year** of issued NDDB determination* (no attachments required) [*CPPU Use Only - NDDB-Listed Species Determination # 1736*]	☐ *New* **Safe Harbor Determination** (optional) must be associated with an application for a GP for the Discharge of Stormwater and Dewatering Wastewaters from Construction Activities ☐ *Renewal/Extension* of an existing Safe Harbor Determination ☐ With modifications ☐ Without modifications (no attachments required) [*CPPU Use Only - NDDB-Safe Harbor Determination # 1736*]
Enter NDDB Determination Number for Renewal/Extension:	Enter Safe Harbor Determination Number for Renewal/Extension:

Part II: Requester Information

If the requester is a corporation, limited liability company, limited partnership, limited liability partnership, or a statutory trust, it must be registered with the Secretary of State. If applicable, the name shall be stated **exactly as it is registered with the Secretary of State. Please note, for those entities registered with the Secretary of State, the registered name will be the name used by DEEP. This information can be accessed at the Secretary of the State's database CONCORD.* (www.concord-sots.ct.gov/CONCORD/index.jsp)

If the requester is an individual, provide the legal name (include suffix) in the following format: First Name; Middle Initial; Last Name; Suffix (Jr, Sr., II, III, etc.).

If there are any changes or corrections to your company/facility or individual mailing or billing address or contact information, please complete and submit the Request to Change company/Individual Information to the address indicated on the form.

1. Requester*

Company Name: **Connecticut Department of Transportation**

Contact Name: **Michael Salter**

Address: **2800 Berlin Turnpike**

City/Town: **Newington** State: **CT** Zip Code: **06131**

Business Phone: **860-594-2933** ext.

E-mail: **Michael.Salter@ct.gov

**By providing this email address you are agreeing to receive official correspondence from the department, at this electronic address, concerning this request. Please remember to check your security settings to be sure you can receive emails from "ct.gov" addresses. Also, please notify the department if your e-mail address changes

a) Requester can best be described as:

☐ Individual ☐ Federal Agency ☒ State agency ☐ Municipality ☐ Tribal

☐ *business entity (* if a business entity complete i through iii):

i) Check type ☐ corporation ☐ limited liability company ☐ limited partnership ☐ limited liability partnership ☐ statutory trust ☐ Other:

ii) Provide Secretary of the State Business ID #: This information can be accessed at the Secretary of the State's database (CONCORD). (www.concord-sots.ct.gov/CONCORD/index.jsp)

iii) ☐ Check here if your business is **NOT** registered with the Secretary of State's office.

b) Acting as (Affiliation), pick one:

☐ Property owner ☐ Consultant ☐ Engineer ☐ Facility owner ☒ Applicant

☐ Biologist ☐ Pesticide Applicator ☐ Other representative:

2. List Primary Contact to receive Natural Diversity Data Base correspondence and inquiries, if different from requester.

Company Name:

Contact Person: Title:

Mailing Address:

City/Town: State: Zip Code:

Business Phone: ext.

**E-mail:

Part III: Site Information

This request can only be completed for one site. A separate request must be filed for each additional site.

1. **SITE NAME AND LOCATION**

Site Name or Project Name: **Project No. 118-166, Route 99 over Hog Brook**

Town(s): **rocky Hill**

Street Address or Location Description:
Route 99 over Hog Brook

Size in acres, or site dimensions: **Approx. 200 ft. by 200 ft.**

Latitude and longitude of the center of the site in decimal degrees (e.g., 41.23456 -71.68574):

Latitude: **41.657113** Longitude: **-72.640082**

Method of coordinate determination (check one):

☐ GPS ☐ Photo interpolation using CTECO map viewer ☒ Other (specify): **GIS**

2a. Describe the current land use and land cover of the site.

Route 99 over Hog Brook with a pedestrian bridge north of road bridge. There is development in all four corners of the structure.

b. Check all that apply and enter the size in acres or % of area in the space after each checked category.

☐ Industrial/Commercial _____ ☐ Residential _____ ☒ Forest 25%

☐ Wetland _____ ☐ Field/grassland _____ ☐ Agricultural _____

☒ Water 25% ☐ Utility Right-of-way _____

☒ Transportation Right-of-way 50% ☐ Other (specify): _____

Part IV: Project Information

1. **PROJECT TYPE:**

Choose Project Type: Bridge work , If other describe: _____

2. Is the subject activity limited to the maintenance, repair, or improvement of an existing structure within the existing footprint? ☐ Yes ☒ No If yes, explain.

Part IV: Project Information (continued)

3. Give a detailed description of the activity which is the subject of this request and describe the methods and equipment that will be used. Include a description of steps that will be taken to minimize impacts to any known listed species.

Bridge 02102 carries Rt. 99 (Main St.) over Hog Brook in Rocky Hill. It is located approximately 0.6 miles south of the junction with Route 160 (Elm St.). The existing structure is a single span bridge, approximately 13' long by 29' curb to curb, consisting of a masonry arch extended with a concrete slab on reinforced concrete abutments. Existing metal beam rail is installed on each approach along each side of the roadway, continuous across the bridge.

An independent, state owned, pedestrian bridge is located approximately 10' upstream of the existing bridge. The pedestrian bridge, Bridge 04179, constructed in 1947, consists of a 37' span reinforced concrete slab on two rolled steel beams founded on reinforced concrete abutments. It is frequently utilized by Veteran's home occupants from around the corner and currently carries a telephone utility.

Bridge 02102 was included on List 25 by Bridge Safety and Evaluation. Based on the current condition of the existing bridge, Bridge Safety and Evaluation recommended the structure be replaced.

The proposed project consists of replacing Bridge 02102 and pedestrian Bridge 04179 with a single structure. The new structure type has been determined to be an 18' x 7' precast, 4-sided box culvert buried 2' in natural streambed material with double riparian shelves. The design is utilizing Accelerated Bridge Construction (ABC) methods so all components, including wingwalls and footings, of the structure are to be fabricated prior to the road closure. The new structure will be constructed in the same location and alignment as the existing structure, but widened on the inlet end to include the pedestrian bridge. The sidewalk at the site location will be widened to 5' to adhere to ADA minimums.

Utility poles carrying overhead wires are located along each side of the road. The poles are owned by AT&T. The overhead facilities are owned by AT&T and CL&P. AT&T conduits are located below the sidewalk and carried by the pedestrian bridge. A 10" MDC water main is located beneath the brook at the inlet between the vehicular and pedestrian bridges. A 30" MDC sewer main is located beneath the brook at the outlet. A 6" CNG gas main is located underground in the northbound lane over the bridge. Above the 10" water main, between the two bridges, there is a 12" steel drainage pipe emptying into Hog Brook to the south, and a 15" RCP drainage pipe emptying into Hog Brook to the north.

Utility poles will be relocated in order to provide the Contractor construction access and proper deflection distance from the approach metal beam rail. The water main will be relocated upstream of the proposed structure. The conduits, gas main and sewer are to remain in place and be maintained and protected throughout the duration of construction.

A utility break out project will be established to relocate the utility poles and overhead facilities prior to construction. The water main will be relocated as part of the construction project.

4. If this is a renewal or extension of an existing Safe Harbor request *with* modifications, explain what about the project has changed.

5. Provide a contact for questions about the project details if different from Part II primary contact.

   Name:

   Phone:

   E-mail:

Part V: Request Requirements and Associated Application Types

Check *one* box from either Group 1, Group 2 *or* Group 3, indicating the appropriate category for this request.

Group 1. If you check one of these boxes, complete Parts I – VII of this form and submit the required attachments A and B.

- ☐ Preliminary screening was negative but an NDDB review is still requested
- ☐ Request regards a municipally regulated or unregulated activity (no state permit/certificate needed)
- ☐ Request regards a preliminary site assessment or project feasibility study
- ☐ Request relates to land acquisition or protection
- ☐ Request is associated with a *renewal* of an existing permit, with no modifications

Group 2. If you check one of these boxes, complete Parts I – VII of this form and submit required attachments A, B, *and* C.

- ☒ Request is associated with a *new* state or federal permit application
- ☐ Request is associated with modification of an existing permit
- ☐ Request is associated with a permit enforcement action
- ☐ Request regards site management or planning, requiring detailed species recommendations
- ☐ Request regards a state funded project, state agency activity, or CEPA request

☐ **Group 3.** If you are requesting a **Safe Harbor Determination**, complete Parts I-VII and submit required attachments A, B, and D. Safe Harbor determinations can only be requested if you are applying for a GP for the Discharge of Stormwater and Dewatering Wastewaters from Construction Activities

If you are filing this request as part of a state or federal permit application(s) enter the application information below.

Permitting Agency and Application Name(s): _____

State DEEP Application Number(s), if known: _____

State DEEP Enforcement Action Number, if known: _____

State DEEP Permit Analyst(s)/Engineer(s), if known: _____

Is this request related to a previously submitted NDDB request? ☒ Yes ☐ No

If yes, provide the previous NDDB Determination Number(s), if known: **201403757**

Part VI: Supporting Documents

Check each attachment submitted as verification that *all* applicable attachments have been supplied with this request form. Label each attachment as indicated in this part (e.g., Attachment A, etc.) and be sure to include the requester's name, site name and the date. **Please note that Attachments A and B are required for all new requests and Safe Harbor renewals/extensions with modifications.** Renewals/Extensions with no modifications do not need to submit any attachments. Attachments C and D are supplied at the end of this form.

☒ Attachment A:	**Overview Map:** an 8 1/2" X 11" print/copy of the relevant portion of a USGS Topographic Quadrangle Map clearly indicating the exact location of the site.
☒ Attachment B:	**Detailed Site Map:** fine scaled map showing site boundary and area of work details on aerial imagery with relevant landmarks labeled. (Site and work boundaries in GIS [ESRI ArcView shapefile, in NAD83, State Plane, feet] format can be substituted for detailed maps, see instruction document)
☒ Attachment C:	**Supplemental Information, Group 2 requirement (attached, DEEP-APP-007C)** ☒ Section i: Supplemental Site Information and supporting documents ☒ Section ii: Supplemental Project Information and supporting documents
☐ Attachment D:	**Safe Harbor Report Requirements, Group 3 (attached, DEEP-APP-007D)**

Part VII: Requester Certification

The requester *and* the individual(s) responsible for actually preparing the request must sign this part. A request will be considered incomplete unless all required signatures are provided.

"I have personally examined and am familiar with the information submitted in this document and all attachments thereto, and I certify that based on reasonable investigation, including my inquiry of the individuals responsible for obtaining the information, the submitted information is true, accurate and complete to the best of my knowledge and belief."

Signature of Requester (a typed name will substitute for a handwritten signature)	**7/24/2015** Date
Michael J. Salter Name of Requester (print or type)	**Transportation Planner** Title (if applicable)
Signature of Preparer (if different than above)	Date
Name of Preparer (print or type)	Title (if applicable)

Note: Please submit the completed Request Form and all Supporting Documents to:

CENTRAL PERMIT PROCESSING UNIT
DEPARTMENT OF ENERGY & ENVIRONMENTAL PROTECTION
79 ELM STREET
HARTFORD, CT 06106-5127

Or email request to: **deep.nddbrequest@ct.gov**

Attachment C: Supplemental Information, Group 2 requirement

Section i: Supplemental Site Information

1. **Existing Conditions**

   Describe all natural and man-made features including wetlands, watercourses, fish and wildlife habitat, floodplains and any existing structures potentially affected by the subject activity. Such features should be depicted and labeled on the site plan that must be submitted. Photographs of current site conditions may be helpful to reviewers.

   The project area includes fish and wildlife habitat within and adjacent to Hog Brook. There are no mapped FEMA floodzones within the project area.

   ☐ **Site Photographs (optional) attached**

   ☐ **Site Plan/sketch of existing conditions attached**

2. **Biological Surveys**

   Has a biologist visited the site and conducted a biological survey to determine the presence of any endangered, threatened or special concern species ☐ Yes ☒ No

   If yes, complete the following questions and submit any reports of biological surveys, documentation of the biologist's qualifications, and any NDDB survey forms.

   Biologist(s) name: _____

   Habitat and/or species targeted by survey: _____

   Dates when surveys were conducted: _____

   ☐ **Reports of biological surveys attached**

   ☐ **Documentation of biologist's qualifications attached**

   ☐ **NDDB Survey forms for any listed species observations attached**

Section ii: Supplemental Project Information

1. Provide a schedule for all phases of the project including the year, the month and/or season that the proposed activity will be initiated and the duration of the activity.

   The proejct is scheduled to be constructed during the 2016 construction season.

2. Describe and quantify the proposed changes to existing conditions and describe any on-site or off-site impacts. In addition, provide an annotated site plan detailing the areas of impact and proposed changes to existing conditions.

   Bridge 02102 carries Rt. 99 (Main St.) over Hog Brook in Rocky Hill. It is located approximately 0.6 miles south of the junction with Route 160 (Elm St.). The existing structure is a single span bridge, approximately 13' long by 29' curb to curb, consisting of a masonry arch extended with a concrete slab on reinforced concrete abutments. Existing metal beam rail is installed on each approach along each side of the roadway, continuous across the bridge.
   An independent, state owned, pedestrian bridge is located approximately 10' upstream of the existing bridge. The pedestrian bridge, Bridge 04179, constructed in 1947, consists of a 37' span reinforced concrete slab on two rolled steel beams founded on reinforced concrete abutments. It is frequently utilized by

Veteran's home occupants from around the corner and currently carries a telephone utility.
Bridge 02102 was included on List 25 by Bridge Safety and Evaluation. Based on the current condition of the existing bridge, Bridge Safety and Evaluation recommended the structure be replaced.
The proposed project consists of replacing Bridge 02102 and pedestrian Bridge 04179 with a single structure. The new structure type has been determined to be an 18' x 7' precast, 4-sided box culvert buried 2' in natural streambed material with double riparian shelves. The design is utilizing Accelerated Bridge Construction (ABC) methods so all components, including wingwalls and footings, of the structure are to be fabricated prior to the road closure. The new structure will be constructed in the same location and alignment as the existing structure, but widened on the inlet end to include the pedestrian bridge. The sidewalk at the site location will be widened to 5' to adhere to ADA minimums.
Utility poles carrying overhead wires are located along each side of the road. The poles are owned by AT&T. The overhead facilities are owned by AT&T and CL&P. AT&T conduits are located below the sidewalk and carried by the pedestrian bridge. A 10" MDC water main is located beneath the brook at the inlet between the vehicular and pedestrian bridges. A 30" MDC sewer main is located beneath the brook at the outlet. A 6" CNG gas main is located underground in the northbound lane over the bridge. Above the 10" water main, between the two bridges, there is a 12" steel drainage pipe emptying into Hog Brook to the south, and a 15" RCP drainage pipe emptying into Hog Brook to the north.
Utility poles will be relocated in order to provide the Contractor construction access and proper deflection distance from the approach metal beam rail. The water main will be relocated upstream of the proposed structure. The conduits, gas main and sewer are to remain in place and be maintained and protected throughout the duration of construction.
A utility break out project will be established to relocate the utility poles and overhead facilities prior to construction. The water main will be relocated as part of the construction project.

☐ **Annotated Site Plan attached**

Attachment D: Safe Harbor Report Requirements

Submit a report, as Attachment D, that synthesizes and analyzes the information listed below. Those providing synthesis and analysis need appropriate qualifications and experience. A request for a safe harbor determination shall include:

1. **Habitat Description and Map(s), including GIS mapping overlays, of a scale appropriate for the site, identifying:**
   - wetlands, including wetland cover types;
   - plant community types;
   - topography;
   - soils;
   - bedrock geology;
   - floodplains, if any;
   - land use history; and
   - water quality classifications/criteria.
2. **Photographs** - The report should include photographs of the site taken from the ground and also all reasonably available aerial or satellite photographs and an analysis of such photographs.
3. **Inspection** - A visual inspection(s) of the site should be conducted, preferably when the ground is visible, and described in the report. This inspection can be helpful in confirming or further evaluating the items noted above.
4. **Biological Surveys** - The report should include all biological surveys of the site where construction activity will take place that are reasonably available to a registrant. A registrant shall notify the Department's Wildlife Division of biological studies of the site where construction activity will take place that a registrant is aware of but are not reasonably available to the registrant.
5. **Based on items #1 through 4 above, the report shall include a Natural Resources Inventory of the site of the construction activity.** This inventory should also include a review of reasonably available scientific literature and any recommendations for minimizing adverse impacts from the proposed construction activity on listed species or their associated habitat.
6. **In addition, to the extent the following is available at the time a safe harbor determination is requested, a request for a safe harbor determination shall include and assess:**
   - Information on Site Disturbance Estimates/Site Alteration information
   - Vehicular Use
   - Construction Activity Phasing Schedules, if any; and
   - Alteration of Drainage Patterns

Connecticut Department of

ENERGY &
ENVIRONMENTAL
PROTECTION

July 29, 2015

Mr. Michael Salter
State of Connecticut
Department of Transportation
2800 Berlin Turnpike
P.O. Box 31546
Newington, CT 06131-7546
michael.salter@ct.gov

Project: CT DOT State Project 118-166, Replacement of Bridge 02102 and Pedestrian Bridge 04179 with a Single Structure, Route 99 over Hog Brook in Rocky Hill, Connecticut
NDDB Determination No.: 201504915

Dear Michael,

I have reviewed Natural Diversity Data Base maps and files regarding the area delineated on the map you provided for the proposed CT DOT State Project 118-166, Replacement of Bridge 02102 and Pedestrian Bridge 04179 with a Single Structure, Route 99 over Hog Brook in Rocky Hill, Connecticut. According to our information we have records for State Special Concern *Terrapene carolina carolina* (eastern box turtle) from the area covered by this project. Thank you for including the protection strategies and protocols that will be in place to protect this species from project impacts. If these protection strategies are followed then the proposed activities will not have an adverse impact on the eastern box turtle. This determination is good for one year. Please re-submit an NDDB Request for Review if the scope of work changes or if work has not begun on this project by July 29, 2016.

Natural Diversity Data Base information includes all information regarding critical biological resources available to us at the time of the request. This information is a compilation of data collected over the years by the Department of Energy and Environmental Protection's Natural History Survey and cooperating units of DEEP, private conservation groups and the scientific community. This information is not necessarily the result of comprehensive or site-specific field investigations. Consultations with the Data Base should not be substitutes for on-site surveys required for environmental assessments. Current research projects and new contributors continue to identify additional populations of species and locations of habitats of concern, as well as, enhance existing data. Such new information is incorporated into the Data Base as it becomes available.

Please contact me if you have further questions at (860) 424-3592, or dawn.mckay@ct.gov . Thank you for consulting the Natural Diversity Data Base. Also be advised that this is a preliminary review and not a final determination. A more detailed review may be conducted as part of any subsequent environmental permit applications submitted to DEEP for the proposed site.

Sincerely,

Dawn M. McKay

Dawn M. McKay
Environmental Analyst 3

US Army Corps of Engineers®
New England District

Appendix 1A: Category 1 Certification Form
(Required for all Inland Projects in Connecticut)

Submit this form **before** work commences to the following addresses:

U.S. Army Corps of Engineers, Permits & Enforcement Branch B (CT),
696 Virginia Road, Concord, MA 01742-2751

Connecticut Department of Energy & Environmental Protection, CT DEEP,
Inland Water Resources Division, 79 Elm Street, Hartford, CT 06106-5127
(not required if work is done within exterior boundaries of Mashantucket)

Permittee Name & Address: Mark W. Alexander - Connecticut DOT

Phone number & Email address: (860) 594-2931, e-mail: Mark.W.Alexander@ct.gov

Work Location/Address: 2800 Berlin Turnpike, Newington, CT 06111

Latitude/Longitude coordinates: N 41° 39' 25" , W 72° 38' 24"

Waterway name: Hog Brook

Contractor Name & Address: _____

Phone number & Email address: _____

Proposed Work Dates: Start: April 2016 Finish: October 2016

Work will be done within Inland Waters & Wetlands under the following categories – refer to Appendix 1 (check all that apply):

- [✓] 1.A. New Fill and/or Fill Associated with Excavation
- [ ] 1.B. Stream Bank Stabilization
- [ ] 1.C. Repair & Maintenance of Existing Authorized or Grandfathered Fill.

Wetland impact: 235 temp./ 565 perm. square feet (sf) Waterway impact: 270 temp./ 1535 perm. sf and/or 150 linear feet

Brief Project Description Project No. 118-166: Replacement of Bridges Nos. 02102 and 04179 carrying Route 99 and a sidewalk over Hog Brook with a single, 4 sided box culvert in the same alignment with 2' of natural streambed material.

Project purpose: Address superstructure deterioration issues.

Secondary Impacts include but are not limited to impacts to inland waters or wetlands drained, dredged, flooded, cleared or degraded resulting from a single and complete project. See General Condition 3.

Does your project include any of these secondary impacts? Y/(N) – If yes, please describe them:

_____

_____

Your signature below, as permittee, indicates that you accept and agree to comply with the terms, eligibility criteria, and general conditions of Category 1 of this Connecticut General Permit.

Permittee Signature: Thomas J Maziarz **Date:** 10-2-2015

Attachment H: General Permit State Project No. 118-166

Replacement of Bridges Nos. 02102 and 04179 Carrying

Route 99 over Hog Brook

Rocky Hill, CT

Includes:

1.....Concurrence from DEEP Fisheries

2.....Final Hydraulic Analysis Report Cover Page

CTDEP INLAND FISHERIES DIVISION COORDINATION TRANSMITTAL MEMORANDUM

DOT Project #: 118-166 Town: Town of Rocky Hill Bridge #: 02102 & 04179
Waterway: Hog Brook Drainage Basin Name & Number: Connecticut River, Basin #: 4000
Project Description / Scope of work: Reconstruction of vehicular bridge, 02102, and pedestrian bridge, 04179, into a single, new structure.
Design contact: (860)594-3316 Town Initiated Project? No

Initial Coordination

The following information is provided as required:

Plan/submittal date: 9/15/2014

_x_ Legible location map with project site clearly marked
_x_ Description of scope of work and if developed, pertinent ½ scale plans as deemed relevant.
_x_ Area photographs

To be completed by CTDEP Inland Fisheries Division and returned to DOT Environmental Planning Division

__ Affect of proposal on our program interests is negligible. No further review is warranted.
__ Additional information is required; a list of requested information is attached.
__ Comments and recommendations are attached.

_____ Initials
_____ Date

Structure Type Agreement

The following information is provided as required:

Plan date:

__ Copies of previous correspondence from Fisheries Division
__ If previous recommendations cannot be incorporated, provide narrative explaining why.
__ ½ scale plans of pertinent plan sheets including plan view, elevation view, profile and details as deemed relevant.

To be completed by CTDEP Inland Fisheries Division and returned to DOT Environmental Planning Division

_x_ DEP Fisheries agrees to the structure type presented in the plans.
_x_ Unconfined in-stream work must be limited to June 1 through September 30.
__ Other comments and recommendations are attached.

[signature] Initials
09/16/14 Date

Final Fisheries Sign-Off

☐ *Check here if project is not FM MOU eligible and will be finalized through DEP IWRD.*

The following information is provided as required:

Plan date: Click for Date

__ Copies of all previous correspondence from Fisheries Division
__ If previous recommendations cannot be incorporated, provide narrative explaining why.
__ ½ scale plans of pertinent plan sheets including plan view, elevation view, profile and details as deemed relevant.

To be completed by CTDEP Inland Fisheries Division and returned to DOT Environmental Planning Division

__ DEP Fisheries comments have been adequately incorporated into project plans
__ The attached Special Conditions must be incorporated into the contract language

_____ DEP Fisheries Biologist _____ Date

Project 118-166
Final Hydraulic Analysis Report
Replacement of Br. No. 02102
Route 99 over Hog Brook
Rocky Hill

Prepared by the

CTDOT Hydraulics and Drainage Section

September 2015

STATE OF CONNECTICUT
DEPARTMENT OF TRANSPORTATION

2800 BERLIN TURNPIKE, P.O. BOX 317546
NEWINGTON, CONNECTICUT 06131-7546
Phone:

October 2, 2015

TO: Rocky Hill Inland Wetlands Commission
761 Old Main St.
Rocky Hill, CT 06067

FROM: Mark W. Alexander
Transportation Assistant Planning Director
Bureau of Policy and Planning

SUBJECT: Notification of Submittal of Application to the Department of Energy and Environmental Protection (DEEP) for a General Permit for Water Resource Construction Activities

PROJECT: State Project No. 118-166
Route 99 Over Hog Brook
Rocky Hill, CT

Enclosed is a copy of our Request for Authorization under the State of Connecticut Department of Energy and Environmental Protection's General Permit for Water Resources Construction Activities. If your agency wishes to comment on the enclosed application, comments must be submitted to the State Department of Energy and Environmental Protection.

Comments should be directed to:

Inland Water Resources Division
Department of Energy and Environmental Protection
79 Elm Street
Hartford, CT 06106-5127

If we can provide additional information, please contact Mr. Andrew H. Davis at 860-594-2157.

Enclosures

An Equal Opportunity Employer
Printed on Recycled & Recovered Paper

Zoltan M. Kanyo/zmk
bcc: Robbin L. Cabelus– Mark W. Alexander – Andrew H. Davis – Michael J. Salter
Theodore H. Nezames – Rabih M. Barakat – Bryan H. Reed – Bao K. Chuong

STATE OF CONNECTICUT
DEPARTMENT OF TRANSPORTATION

2800 BERLIN TURNPIKE, P.O. BOX 317546
NEWINGTON, CONNECTICUT 06131-7546
Phone:

October 2, 2015

TO: Rocky Hill Conservation Commission
761 Old Main St.
Rocky Hill, CT 06067

FROM: Mark W. Alexander
Transportation Assistant Planning Director
Bureau of Policy and Planning

SUBJECT: Notification of Submittal of Application to the Department of Energy and Environmental Protection (DEEP) for a General Permit for Water Resource Construction Activities

PROJECT: State Project No. 118-166
Route 99 over Hog Brook
Rocky Hill, CT

Enclosed is a copy of our Request for Authorization under the State of Connecticut Department of Energy and Environmental Protection's General Permit for Water Resources Construction Activities. If your agency wishes to comment on the enclosed application, comments must be submitted to the State Department of Energy and Environmental Protection.

Comments should be directed to:

Inland Water Resources Division
Department of Energy and Environmental Protection
79 Elm Street
Hartford, CT 06106-5127

If we can provide additional information, please contact Mr. Andrew H. Davis at 860-594-2157.

Enclosures

An Equal Opportunity Employer
Printed on Recycled or Recovered Paper

Zoltan M. Kanyo/zmk

bcc: Robbin L. Cabelus– Mark W. Alexander – Andrew H. Davis – Michael J. Salter
Theodore H. Nezames – Rabih M. Barakat – Bryan H. Reed – Bao K. Chuong

STATE OF CONNECTICUT
DEPARTMENT OF TRANSPORTATION

2800 BERLIN TURNPIKE, P.O. BOX 317546
NEWINGTON, CONNECTICUT 06131-7546
Phone:

October 2, 2015

TO: Rocky Hill Planning and Zoning Commission
761 Old Main St.
Rocky Hill, CT 06067

FROM: Mark W. Alexander
Transportation Assistant Planning Director
Bureau of Policy and Planning

SUBJECT: Notification of Submittal of Application to the Department of Energy and Environmental Protection (DEEP) for a General Permit for Water Resource Construction Activities

PROJECT: State project No. 118-166
Route 99 Over Hog Brook
Rocky Hill, CT

Enclosed is a copy of our Request for Authorization under the State of Connecticut Department of Energy and Environmental Protection's General Permit for Water Resources Construction Activities. If your agency wishes to comment on the enclosed application, comments must be submitted to the State Department of Energy and Environmental Protection.

Comments should be directed to:

Inland Water Resources Division
Department of Energy and Environmental Protection
79 Elm Street
Hartford, CT 06106-5127

If we can provide additional information, please contact Mr. Andrew H. Davis at 860-594-2157.

Enclosures

An Equal Opportunity Employer
Printed on Recycled or Recovered Paper

Zoltan M. Kanyo/zmk
bcc: Robbin L. Cabelus– Mark W. Alexander – Andrew H. Davis – Michael J. Salter
Theodore H. Nezames – Rabih M. Barakat – Bryan H. Reed – Bao K. Chuong

PERMITS AND/OR SUPPLEMENTAL TO FORM 816 AND REQUIRED PROVISIONS

The following Permits and/or Supplemental to Form 816 and Required Provisions follow this page and are hereby made part of this Contract.

- **PERMITS AND/OR PERMIT APPLICATIONS**

General Permit for Water Resource Construction Activities	Approved on October 2, 2015
Army Corps of Engineers Category 1	Approved on October 2, 2015

- **SUPPLEMENTAL SPECIFICATIONS TO STANDARD SPECIFICATIONS FORM 816**

- **Construction Contracts - Required Contract Provisions (State Funded Only Contracts)**

State of Connecticut

Department of Transportation

SUPPLEMENTAL SPECIFICATIONS

TO

THE STANDARD SPECIFICATIONS

FOR

ROADS, BRIDGES AND INCIDENTAL CONSTRUCTION

FORM 816

2004

JULY 2015

July 2015

DIVISION I
GENERAL REQUIREMENTS AND COVENANTS

SECTION		SPECIFICATION NUMBER
1.01	Definition of Terms and Permissible Abbreviations	101
1.02	Proposal Requirements and Conditions	102
1.03	Award and Execution of Contract	103
1.05	Control of the Work	105
1.07	Legal Relations and Responsibilities	107
1.08	Prosecution and Progress	108
1.09	Measurement and Payment	109
1.10	Environmental Compliance	110
1.11	Claims	111
1.20	General Clauses for Facilities Construction	120

DIVISION II
CONSTRUCTION DETAILS

SECTION		SPECIFICATION NUMBER
2.02	Roadway Excavation, Formation of Embankment and Disposal of Surplus Material	202
2.05	Trench Excavation	205
2.12	Subbase	212
2.16	Pervious Structure Backfill	216
3.04	Processed Aggregate Base	304
4.01	Concrete for Pavement	401
5.08	Shear Connectors	508
5.14	Prestressed Concrete Members	514
6.01	Concrete for Structures	601
6.03	Structural Steel	603
6.12	Concrete Cylinder Curing Box	612
6.51	Culverts	651
7.01	Drilled Shafts	701
7.02	Piles	702
7.06	Micropiles	706
8.11	Concrete Curbing	811
8.13	Stone Curbing	813
8.22	Temporary Precast Concrete Barrier Curb	822
9.10	Metal Beam Rail	910
9.18	Three-Cable Guide Railing (I-Beam Post) and Anchorages	918
9.21	Concrete Sidewalks and Ramps	921
9.22	Bituminous Concrete Sidewalk Bituminous Concrete Driveway	922
9.44	Topsoil	944
9.49	Furnishing, Planting and Mulching Trees, Shrubs, Vines and Ground Cover Plants	949
9.50	Turf Establishment	950
9.75	Mobilization and Project Closeout	975
9.77	Traffic Cone	977
9.78	Traffic Drum	978
9.79	Construction Barricades	979
9.80	Construction Staking	980
9.81	42 Inch (1 Meter) Traffic Cone	981
10.00	General Clauses for Highway Illumination and Traffic Signal Projects	1000
10.01	Trenching and Backfilling	1001
10.10	Concrete Handhole	1010
11.13	Control Cable	1113
12.07	Sign Face – Extruded Aluminum	1207
12.08	Sign Face – Sheet Aluminum	1208

DIVISION II
CONSTRUCTION DETAILS

SECTION		SPECIFICATION NUMBER
12.10	Epoxy Resin Pavement Markings, Symbols and Legends	1210
12.20	Construction Signs	1220
18.00	General Clauses – Impact Attenuation Systems	1800
18.06	Type D Portable Impact Attenuation System	1806

July 2015

DIVISION III
MATERIALS SECTION

SECTION		SPECIFICATION NUMBER
M.03	Portland Cement Concrete	M03
M.06	Metals	M06
M.08	Drainage	M08
M.11	Masonry Facing, Cement and Dry Rubble Masonry, Brick, Mortar	M11
M.13	Roadside Development	M13
M.16	Traffic Control Signals	M16
M.17	Elastomeric Materials	M17
M.18	Signing	M18

JULY 2015

STANDARD SPECIFICATIONS
FOR
ROADS, BRIDGES AND INCIDENTAL CONSTRUCTION
FORM 816

ERRATA

PG.	ARTICLE OR SUBARTICLE	LINE NO.	CORRECTION	REV. DATE
i	Table of Contents	20	Insert “1.11 Claims”	July10
iii	Table of Contents	10	Insert “7.01 Drilled Shafts”	July14
iii	Table of Contents	15	Insert “7.06 Micropiles”	July14
iv	Table of Contents	11	Change “Guild” to “Guide”	Jan05
iv	Table of Contents	13	Change “Concrete Sidewalks” to “Concrete Sidewalks and Ramps”	July15
v	Table of Contents	2	Change “Mobilization” to “Mobilization and Project Closeout”	July14
vi	Table of Contents	21	Change “Sign Face – Extruded Aluminum (Type III Reflective Sheeting)” to “Sign Face – Extruded Aluminum”	Jan15
vi	Table of Contents	33	Change “Construction Signs – Encapsulated Lens Type III Reflective Sheeting” to “Construction Signs”	Jan15
32	1.05.01	38	Change “Connecticut General Statutes” to “CGS”	Jan05
97	1.10.03-2	32	Change “D.E.P.” to “DEEP”	Jan14
97	1.10.03-2	39	Change “D.E.P,” to “DEEP,”	Jan14
98	1.10.03-2.1	13	Change “D.E.P.” to “DEEP”	Jan14
99	1.10.03-2.6	23	Change “D.E.P.” to “DEEP”	Jan14
100	1.10.03-2.9	32	Change “D.E.P.” to “DEEP”	Jan14
101	1.10.03-2.12	22	Change “D.E.P.” to “DEEP”	Jan14
102	1.10.04	26	Change “D.E.P.” to “DEEP”	Jan14
105	1.20	29	Change “Workmen and Equipment” to “Personnel and Equipment”	Jan05
105	1.20	31	Delete “Completion of Construction Work and”	Jan05
108	1.20-1.04.01	26	Change “othewise” to “otherwise”	July07
122	1.20-1.06.08	3	Change “Certificate of Compliance” to “C.O.C.”	July07
131	1.20-1.08.05	34	Change “Workmen and Equipment” to “Personnel and Equipment”	Jan05
132	1.20-1.08.11	12	Change “Certificate of Compliance” to “C.O.C.”	July07
133	1.20-1.08.13	7	Delete “Completion of Construction Work and”	Jan05
133	1.20-1.08.13	9	Change “Certificate of Compliance” to “C.O.C.”	July07
133	1.20-1.08.13	15	Change “Certificate of Compliance” to “C.O.C.”	July07
133	1.20-1.08.13	20	Change “Certificate of Compliance” to “C.O.C.”	July07
164	2.04.03-1	2	Change “6.01.03-10” to “6.01.03-6”	Jan14
196	3.03.02	33	Change “Article M.03.01” to “Section M.03”	Jan14
203	3.05.05	21	Change “(t) to “(mton)”	Jan15
230	4.03.05	38	Change “(t) to “(mton)”	Jan15
245	4.06.04	11	Change “**Over weight (mass) Adjustments -**” and replace with indented “Over weight (mass) Adjustments -” as a subsection of “**1. Bituminous Concrete Class ( ).**”	Jan05

PG.	ARTICLE OR SUBARTICLE	LINE NO.	CORRECTION	REV. DATE
256	5.01.02	22	Change “DEP” to “DEEP”.....	Jan14
259	5.03.03	24	Change “Such requirements of Article 5.02.03 ... equally to this construction.” to “All such plans prepared by the Contractor shall be considered working drawings and shall be submitted with engineering calculations to the Engineer for review in accordance with the requirements of Article 1.05.02.".....	July10
262	5.06.02	26	Change “Article M.03.01” to “Section M.03”.....	Jan14
262	5.06.02	27	Change “Article M.03.01” to “Section M.03”.....	Jan14
265	5.07.02	19	Change “Subarticle M.03.01-11” to “Article M.03.09”.....	Jan14
265	5.07.02	23	Change “Approved Products List for Geotextiles referred to in Subarticle M.08.01-26.” to “Qualified Products List referred to in Subarticle M.08.01-19 Geotextiles.”.....	July14
271	5.09.02	39	Change “M.06.02-12” to “M.06.02-4 Welded Stud Shear Connectors”.....	July10
272	5.13.02	22	Change “M.08.01-27” to “M.08.01-20 PVC Pipe or M.08.01-21 PVC Gravity Pipe”.....	July13
378	6.52.02	2	Change “M.08.01-22” to “M.08.01-11 Reinforced Concrete Culvert End”.....	July13
378	6.52.02	3	Change “M.08.01-23” to “M.08.01-6 Metal Culvert End”.....	July13
378	6.52.02	4	Change “gravel fill” to “granular fill”.....	Jan15
378	6.52.03	12	Change “gravel fill” to “granular fill”.....	Jan15
378	6.52.04	22	Change “gravel fill” to “granular fill”.....	Jan15
378	6.52.05	35	Change “gravel fill” to “granular fill”.....	Jan15
404	7.05.02	11	Change “Article M.03.01” to “Section M.03”.....	Jan14
414	7.28.05	4	Change “(t) to “(mton)”.....	Jan15
416	7.51.02-(4)	7	Change “M.08.01-26” to “M.08.01-19 Geotextiles”.....	July13
418	7.55.02	26	Change “M.08.01-26” to “M.08.01-19 Geotextiles”.....	July13
420	8.11.02	37	Change “Article M.03.01” to “Section M.03”.....	Jan14
420	8.11.02	38	Change “Article M.03.01” to “Subarticle M.03.08-2”.....	Jan14
421	8.11.02	1	Change “Article M.03.01” to “Section M.03”.....	Jan14
421	8.11.03-4	42	Change “4.01.03 for concrete pavement” to “ 6.01.03 Concrete for Structures”...	Jan15
422	8.11.04	12	Change “meters” to “linear feet (meters)”.....	Jan15
426	8.16.02	28	Change “Subarticle M.03.01-8” to “Article M.03.08”.....	Jan14
428	8.18.02	10	Change “Subarticle M.03.01-11” to “Article M.03.09”.....	Jan14
429	8.21.02-6	30	Change “M.03.01-11” to “Article M.03.09”.....	Jan14
430	8.21.03-6	37	Change “M.03.01-11” to “Article M.03.09”.....	Jan14
434	9.04.02	14	Change “Subarticle M.06.02-1” to “Article 6.03.02”.....	July10
434	9.04.02	15	Change “M.06.02-9(d) for metal bridge rail (cast post—aluminum)” to “Malleable castings shall conform to the requirements of the specifications for malleable iron castings, ASTM A 47, Grade No. 32510 (22010). Ductile iron castings shall conform to the Specifications for Ductile Iron Castings, ASTM A 536, Grade 60-40-18 (414-276-18) unless otherwise specified. In addition to the specified test coupons, test specimens from parts integral with the castings, such as risers, shall be tested for castings having a weight (mass) of more	

PG.	ARTICLE OR SUBARTICLE	LINE NO.	CORRECTION	REV. DATE
			than 1000 pounds (455 kilograms) to determine that the required quality is obtained in the castings in the finished condition.”	July10
445	9.11.02	14	Change “Subarticle M.03.01-12” to “Article M.03.05”	Jan14
452	9.14.02	2	Change “Subarticle M.06.02-8” to “ASTM A 53, Type E or S, Grade A, Schedule 40 Black Finish.”	July10
452	9.14.02	4	Change “Subarticle M.06.02-9(d) except that the grade shall be 32510” to “the specifications for malleable iron castings, ASTM A 47, Grade No. 32510 (22010). Ductile iron castings shall conform to the Specifications for Ductile Iron Castings, ASTM A 536, Grade 60-40-18 (414-276-18) unless otherwise specified. In addition to the specified test coupons, test specimens from parts integral with the castings, such as risers, shall be tested for castings having a weight (mass) of more than 1000 pounds (455 kilograms) to determine that the required quality is obtained in the castings in the finished condition.”	July10
454	9.16.02	20	Change “Article M.03.01” to “Section M.03”	Jan14
464	9.23.05	9	Change “ton (t)” to “ton (mton)”	Jan15
464	9.24.02-1	19	Change “Article M.03.01” to “Section M.03”	Jan14
467	9.30.02	36	Change “reflective” to “retroreflective”	July15
467	9.30.02	39	Change “reflective” to “retroreflective”	July15
471	9.42.05	9	Change “(t)” to “(mton)”	Jan15
475	9.46.05	2	Change “(t)” to “(mton)”	Jan15
475	9.47.02-5	34	Change “Article M.03.01” to “Section M.03”	Jan14
496	9.70.01	37	Change “CDOT” to “ConnDOT”	Jan05
517	10.00	21	Add “10.00.14—Maintenance of Illumination During Construction”	July14
518	10.00.03(2)	41	Change “pre-emotion” to “pre-emption”	July14
519	10.00.04	12	Capitalize “Section”	July14
519	10.00.04	18	Capitalize “Project”	July14
533	10.02.02	6	Change “Article M.03.01” to “Section M.03”	Jan14
544	10.11.02	5	Change “M.08.01-25 or M.08.01-27” to “M.08.01-20 or M.08.01-21”	July13
548	10.17.03	14	Change “6.01.03-21” to “6.01.03-10”	Jan14
552	11.03.03-1	18	Change “M.03.01-12” to “M.03.05”	Jan14
569	11.14.05	19	Change “Span Wire” to “Span Wire (Type)”	July12
576	12.01.02	40	Change “Subarticle M.03.01-12” to “Article M.03.05”	Jan14
577	12.01.03	7	Change “6.03.03-19” to “6.03.03-4 (f) High Strength Bolted Connections”	July10
577	12.01.03	23	Change “Article 6.03.03-15” to “Subarticle 6.03.03-4(c) Bearings”	July10
577	12.01.03	27	Change “Article 6.03.03-19 (c)(3)” to “Subarticle 6.03.03-4 (f) High Strength Bolted Connections Turn-of-Nut Installation Method”	July10
578	12.02.02	23	Change “M.03.01-12” to “M.03.05”	Jan14
580	12.02.03	16	Change “6.01.03-21” to “6.01.03-10”	Jan14

PG.	ARTICLE OR SUBARTICLE	LINE NO.	CORRECTION	REV. DATE
583	12.05.01	10	Change “reflective” to “retroreflective”.....	July15
583	12.05.02	15	Change “Reflective” to “Retroreflective”.....	July15
583	12.05.02	16	Change “either Subarticle M.18.09.01 (Type V) or M.18.09.02” to “Article M.18.09”.....	Jan15
583	12.05.03	28	Change “reflective” to “retroreflective”.....	July15
583	12.05.04	35	Change “12.05.040” to “12.05.04”.....	July14
598	12.12.02	1	Change “reflective” to “retroreflective”.....	July15
604	18.02.02	36	Change “Approved Products List” to “Qualified Products List”.....	July14
609	18.07.02	30	Change “M18” to “M.18”.....	July14
638	M.04.02	37	Change “Asphalt Institute’s” to “AI’s”.....	Jan05
705	M.09.02-2	18	Change “Article M.09.02(1)” to “Subarticle M.09.02-1”.....	July14
708	M.09.02-5	5	Change “Article M.03.01” to “Section M.03”.....	Jan14
708	M.09.02-6	40	Change “Article M.03.01-2” to “Subarticle M.03.01-2”.....	July14
711	M.10.02-1	17	Change “Subarticle M.06.02-1(b)” to “Article M.06.02”.....	July10
713	M.10.02-7	8	Change “Article M.03.01” to “Section M.03”.....	Jan14
720	M.10.08-3	2	Change “Subarticle M.06.02-1(b)” to “Article M.06.02”.....	July10
720	M.10.08-4	10	Change “Article M.03.01” to “Section M.03”.....	Jan14
726	M.12.03	18	After “M.03.01” add “and M.03.02”.....	Jan14
731	M.12.08-3	20	Change “Article M.06.01-1” to “Subarticle M.06.01-1”.....	July14
748	M.14.01-3	42	Change “Article M.06.01-1” to “Subarticle M.06.01-1”.....	July14
749	M.14.01-4	2	Change “Article M.08.01-5” to “Subarticle M.08.01-5”.....	July14
749	M.14.01-7	22	Change “Article M.14.01-2” to “Subarticle M.14.01-2”.....	July14
749	M.14.01-8	32	Change “Article M.03.01-12” to “Article M.03.05”.....	Jan14
758	M.15.10	9	Change “Article M.15.09-1” to “Subarticle M.15.09-1”.....	July14
759	M.15.15-4	23	Change “Article M.16.03.2” to “Subarticle M.16.03-2”.....	July14
759	M.15.15-5	26	Change Article M.15.02.2” to “Subarticle M.15.02-2”.....	July14
759	M.15.15-5	24	Change “Article M.03.01” to “Section M.03”.....	Jan14
759	M.15.15-6	27	Change “Article M.03.01” to “Section M.03”.....	Jan14
760	M.15.15-16	21	Change “non-fusible” to “fused”.....	Jan05
823	Pay Items	28	Change “ton (t)” to “ton (mton)”.....	Jan15
823	Pay Items	29	Change “ton (t)” to “ton (mton)”.....	Jan15
823	Pay Items	35	Change “ton (t)” to “ton (mton)”.....	Jan15
824	Pay Items	4	Change “ton (t)” to “ton (mton)”.....	Jan15
825	Pay Items	25	Change “l.s. (l.s.)” to “ea. (ea.)”.....	Jan15
828	Pay Items	29	Add “7.01, Furnishing Drilled Shaft Drilling Equipment, l.s. (l.s.)”.....	July14
828	Pay Items	30	Add “7.01, Drilled Shaft (Diameter), l.f. (m).....	July14
828	Pay Items	31	Add “7.01, Drilled Shaft Earth Excavation (Diameter), l.f. (m)”.....	July14
828	Pay Items	32	Add “7.01, Drilled Shaft Rock Excavation (Diameter), l.f. (m)”.....	July14
828	Pay Items	33	Add “7.01, Obstructions, hr. (hr.)”.....	July14
828	Pay Items	34	Add “7.01, Trial Drilled Shaft (Diameter), l.f. (m)”.....	July14
828	Pay Items	35	Add “7.01, Exploration Test Boring, l.f. (m)”.....	July14
828	Pay Items	36	Add “7.01, Permanent Casing (Diameter), l.f. (m)”.....	July14
828	Pay Items	37	Add “7.01, Access Tubes, l.f. (m)”.....	July14

PG.	ARTICLE OR SUBARTICLE	LINE NO.	CORRECTION	REV. DATE
829	Pay Items	4	Add “7.02, Dynamic Pile Driving Analysis (PDA) Test, ea. (ea.)”	July13
829	Pay Items	5	Add “7.02, Pre-Augering of Piles, l.f. (m)”	July13
829	Pay Items	13	Add “7.06, Micropiles, ea. (ea.)”	July14
829	Pay Items	14	Add “7.06, Verification Test for Micropiles, ea. (ea.)”	July14
829	Pay Items	15	Add “7.06, Proof Test for Micropiles, ea. (ea.)”	July14
829	Pay Items	16	Add “7.06, Micropile Length Adjustment, l.f. (m)”	July14
829	Pay Items	24	Change “ton (t)” to “ton (mton)”	Jan15
833	Pay Items	14	Add “9.21, Concrete Sidewalk Ramp, s.f.”	July15
833	Pay Items	15	Add “9.21, Detectable Warning Strip, ea.”	July15
833	Pay Items	16	Add “9.21, Retrofit Detectable Warning Strip, ea.”	July15
833	Pay Items	20	Change “ton (t)” to “ton (mton)”	Jan15
834	Pay Items	4	Change “ton (t)” to “ton (mton)”	Jan15
835	Pay Items	3	Change “Mobilization” to “Mobilization and Project Closeout”	July14
837	Pay Items	24	Change “Span Wire” to “Span Wire (Type)”	July12
839	Pay Items	3	Change “Sign Face – Extruded Aluminum (Type III Reflective Sheeting)” to “Sign Face – Extruded Aluminum”	Jan15
840	Pay Items	6	Change “Construction Signs – Type III Reflective Sheeting” to “Construction Signs”	Jan15
845	Index	6	Add page 133 to “Acceptance of Project”	Jan05
846	Index	13	Add page 107 to “Bids: Consideration of”	Jan05
847	Index	28	Add page 132 to “Cleaning Up, Final”	Jan05
849	Index	25	Add page 107 to “Consideration of Bids”	Jan05
849	Index	39	Add page 108 to “Contract: Intent of”	Jan05
850	Index	3	Add page 133 to “Contractor’s: Responsibility, Termination of the”	Jan05
850	Index	13	Add page 114 to “Cooperation by Contractor”	Jan05
850	Index	15	Add page 114 to “Coordination of Special Provisions, Plans, Supplemental Specifications and Standard Specifications and Other Contract Requirements”	Jan05
850	Index	40	Add page 128 to “Cutting and Patching:”	Jan05
852	Index	16	Add page 106 to “Examination of Plans, Specifications, Special Provisions and Site of Work”	Jan05
852	Index	38	Insert “Facilities, Temporary…126”	Jan05
853	Index	7	Add page 132 to “Final: Cleaning Up”	Jan05
854	Index	35	Add page 115 to “Inspection”	Jan05
855	Index	11	Add page 108 to “Intent of Contract”	Jan05
855	Index	22	Add page 106 to “Knowledge of Applicable Laws”	Jan05
855	Index	25	Add page 106 to “Laws: Knowledge of Applicable”	Jan05
856	Index	27	Add page 120 to “Materials: Source of Supply and Quality”	Jan05
856	Index	28	Add page 121 to “Materials: Storage of”	Jan05
857	Index	33	Add page 133 to “Operation and Maintenance Manuals:”	Jan05
857	Index	34	Change page 133 to 136 for “Equipment and Systems Maintenance Manual”	Jan05
859	Index	2	Add page 131 to “Personnel and Equipment”	Jan05

PG.	ARTICLE OR SUBARTICLE	LINE NO.	CORRECTION	REV. DATE
860	Index	6	Add page 114 to “Plans: Coordination of Special Provisions, Supplemental Specifications and Standard Specifications and Other Contract Requirements”.....	Jan05
860	Index	7	Add page 106 to “Plans: Examination of”.....	Jan05
860	Index	30	Change page 108 to 112 for “Product Data”.....	Jan05
860	Index	31	Change page 108 to 112 for “Product Samples”.....	Jan05
860	Index	32	Add page 124 to “Product Selection:”.....	Jan05
861	Index	12	Add page 126 to “Prosecution of Work”.....	Jan05
861	Index	38	Change page 115 to 135 for “Record Drawings”.....	Jan05
863	Index	3	Add page 125 to “Sanitary Provisions”.....	Jan05
863	Index	18	Insert “Services, Temporary…126”.....	Jan05
863	Index	23	Add page 111 to “Shop Drawings”.....	Jan05
864	Index	4	Add page 106 to “Site of Work, Examination of”.....	Jan05
864	Index	12	Add page 120 to “Source of Supply and Quality”.....	Jan05
864	Index	19	Add page 114 to “Special Provisions: Coordination of Plans, Supplemental Specifications and Standard Specifications and Other Contract Requirements”.....	Jan05
864	Index	20	Add page 106 to “Special Provisions: Examination of”.....	Jan05
864	Index	26	Add page 114 to “Specifications: Coordination of Plans, Special Provisions and Other Contract Requirements”.....	Jan05
864	Index	27	Add page 106 to “Specifications: Examination of”.....	Jan05
864	Index	43	Add page 121 to “Storage”.....	Jan05
865	Index	27	Delete page 108 from “Submittals: Shop Drawings”.....	Jan05
865	Index	45	Insert “Temporary Utilities, Services, and Facilities…126”....	Jan05
866	Index	2	Add page 133 to “Termination of Contractor’s Responsibility”.....	Jan05
866	Index	23	Insert “Training…137”.....	Jan05
866	Index	45	Add page 133 to “Utility Services”.....	Jan05
867	Index	8	Insert “Warranties…121”.....	Jan05
867	Index	24	Add page 126 to “Work: Prosecution of”.....	Jan05

CONNECTICUT
SUPPLEMENTAL SPECIFICATION
SECTION 1.01
DEFINITIONS OF TERMS AND PERMISSIBLE ABBREVIATIONS

1.01.01 — Definitions:

After the definition for "Award" *add the following definition:*

"**BID**: The submission of a proposal for the work contemplated."

After the definition for "Bid Manual" *add the following definition:*

"**BIDDER**: Any individual, firm, partnership, corporation, or combination thereof, submitting a proposal for the work contemplated, acting directly or through a duly authorized representative."

After the definition for "Calendar Day" *add the following definition:*

"**CATALOG CUT (PRODUCT DATA):** Document(s) with information such as manufacturer's product specifications, manufacturer's installation instructions, standard color charts, wiring diagrams showing factory-installed wiring, printed performance curves and operational range diagrams. Product data that must be specially prepared because standard printed data is not suitable shall be considered shop drawings."

*Change the title of "***Construction Order***" to "***Construction Order, Change Order.***"*

After the definition for "Contractor" *add the following definition:*

"CULVERT: A covered channel or a large pipe for carrying a watercourse below ground level, usually under a road or railway."

After the definition for "Material" *add the following definitions:*

"MUNICIPALITY: City, town or county.
NOTICE TO PROCEED: A written notice issued by the Engineer to the Contractor stating the date on which the Contractor is authorized to commence and proceed with the Contract work."

After the end of the definition for "Plans" *insert the following:*

"A. Standard Sheets – Standardized plans containing details approved by the Department and the FHWA, for construction of a given type on any project, included in contracts on an as-needed basis.

PRODUCT DATA (CATALOG CUT): Document(s) with information such as manufacturer's product specifications, manufacturer's installation instructions, standard color charts, wiring diagrams showing factory-installed wiring, printed performance curves and operational range diagrams Product data that must be specially prepared because standard printed data is not suitable shall be considered shop drawings."

After the definition for "Project Site" *add the following definition:*

"QUALIFIED PRODUCTS LIST (QPL): A report that has been developed as a means for determining what products, suppliers, manufacturers, equipment and methodologies may be used on construction projects. This report can be located on the CT Department of Transportation Website."

After the definition for "Reclaimed Waste" *add the following definition:*

"RIGHT-OF-WAY: A general term denoting land, property of interest therein, usually in a strip, acquired for or devoted to transportation purposes."

After the definition for "Subcontractor" a*dd the following definition:*

"**SUBSTANTIAL COMPLETION:** The date at which the performance of all work on the Project has been completed except minor or incidental items, final cleanup, work required under a warranty, and repair of unacceptable work, and provided the Engineer has determined that:

A. The Project is safe and convenient for use by the public, and
B. All traffic lanes including all safety appurtenances are in their final configuration, and
C. Failure to complete the work and repairs excepted above does not result in the deterioration of other completed work; and provided further, that the value of work remaining to be performed, repairs, and cleanup is less than one percent (1%) of the estimated final Contract amount, and
D. If applicable a Certificate of Compliance has been issued."

1.01.02 — Abbreviations, Publications, and Standards:

Delete the entire Article and replace with the following:

" **1.01.02—Abbreviations, Publications and Standards:** Whenever one of the following abbreviations is used in the Contract, its meaning shall be interpreted as follows:

AA—Aluminum Association, Inc. (The)
AABC—Associated Air Balance Council
AAMA—American Architectural Manufacturers Association
AAPA—American Association of Port Authorities
AASHTO—American Association of State Highway and Transportation Officials: Wherever reference is made to an AASHTO Standard Method of Test or Standard Specification, it refers by letter and number to the method or specification published

by AASHTO in the "Standard Specifications for Transportation Materials and Methods of Sampling and Testing". The edition governing the work shall be in effect on the date the Contract was advertised for solicitation of bids shall govern.

ABMA—American Bearing Manufacturers Association
ACGIH—American Council of Government Industrial Hygienists
ACI—ACI International (American Concrete Institute)
ADAAG—Americans with Disabilities Act (ADA) Accessibility Guidelines for Buildings and Facilities
ADSC—The International Association of Foundation Drilling
AF&PA—American Forest & Paper Association
AGA—American Gas Association
AGC—Associated General Contractors of America (The)
AHA—American Hardboard Association
AHAM—Association of Home Appliance Manufacturers
AI—Asphalt Institute
AIA—The American Institute of Architects (The)
AISC—American Institute of Steel Construction
AISI—American Iron and Steel Institute
AITC—American Institute of Timber Construction
A.L.I.—Automotive Lift Institute
ALSC—American Lumber Standard Committee, Incorporated
AMCA—Air Movement and Control Association International, Inc.
ANLA—American Nursery and Landscape Association
ANSI—American National Standards Institute
AOAC—AOAC International
AOSA—Association of Official Seed Analysts
APA—APA-The Engineered Wood Association
API—American Petroleum Institute
AREMA—American Railway Engineering and Maintenance-of-Way Association
ARI—Air-Conditioning & Refrigeration Institute
ARTBA—American Road and Transportation Builders Association
ASA—Acoustical Society of America
ASC—Adhesive and Sealant Council
ASCE—American Society of Civil Engineers
ASHRAE—American Society of Heating, Refrigerating and Air-Conditioning Engineers
ASME—ASME International (The American Society of Mechanical Engineers International)
ASNT—American Society for Non-Destructive Testing
ASSE—American Society of Sanitary Engineering
ASTM—American Society of Testing and Materials (ASTM International): Wherever reference is made to an ASTM specification, test method, or practice, it refers by letter, number, or both to standards published by ASTM International in the "ASTM Standards Source™ Database". The edition governing the work shall be in effect on the date the Contract was advertised for solicitation of bids shall govern.
ATSSA—American Traffic Safety Services Association
AWI—Architectural Woodwork Institute
AWPA—American Wood-Preservers' Association
AWPI—American Wood Preservers Institute

AWS—American Welding Society: Wherever reference is made to an AWS materials specification, inspection methods, or welding procedures, it refers by section number to standards of the American Welding Society published in the applicable steel, or aluminum welding code. The edition governing the work shall be in effect on the date the Contract was advertised for solicitation of bids shall govern.
AWWA—American Water Works Association
BHMA—Builders Hardware Manufacturers Association
BIA—Brick Industry Association (The)
BOCA—BOCA International, Inc.
CBM—Certified Ballast Manufacturers Association
CCRL—Cement and Concrete Reference Laboratory
CDA—Copper Development Association (The)
CGA—Compressed Gas Association
CISCA—Ceilings and Interior Systems Construction Association
CLFMI—Chain Link Fence Manufacturers Institute
ConnDOT—Connecticut Department of Transportation
CFR—Code of Federal Regulations
CGS—Connecticut General Statutes
CISPI—Cast Iron Soil Pipe Institute
CRI—Carpet and Rug Institute (The)
CRSI—Concrete Reinforcing Steel Institute
CSI—Construction Specifications Institute (The)
CSSB—Cedar Shake & Shingle Bureau
CTI—Cooling Technology Institute
DASMA—Door and Access Systems Manufacturers Association, International
~~DEP—Connecticut Department of Environmental Protection~~ *see DEEP*
DEEP—Connecticut Department of Energy and Environmental Protection
DHI—Door and Hardware Institute
DOD—Department of Defense Military Specifications and Standards
~~DPUC—Department of Public Utility Control~~ *see PURA*
EIA—Electronic Industries Alliance
EPA—Environmental Protection Agency
FAA—Federal Aviation Administration
FCC—Federal Communications Commission
FCICA—Floor Covering Installation Contractors Association
FHWA—Federal Highway Administration
FMG—FM Global
FRA—Federal Railway Administration
FS—Wherever reference is made to FS in the contract, it refers by number, letter, or both, to the latest standard or tentative standard of the Federal Specification Unit, General Services Administration, Federal Supply Service, as to materials, specifications, or methods of testing, whichever the case may be.
FTA—Federal Transit Administration
GA—Gypsum Association
GANA—Glass Association of North America
GSA—General Services Administration
HI—Hydraulics Institute
HPVA—Hardwood Plywood & Veneer Association
ICC—International Code Council

ICC-ES—ICC Evaluation Service, Inc.
ICEA—Insulated Cable Engineers Association, Inc.
IEC—International Electrotechnical Commission
IEEE—Institute of Electrical and Electronics Engineers, Inc. (The)
IES—Illuminating Engineers Society
IESNA—Illuminating Engineering Society of North America
IGCC—Insulating Glass Certification Council
IGMA—Insulating Glass Manufacturers Alliance
IMSA—International Municipal Signal Association
IRI—HSB Industrial Risk Insurers
ISO—International Organization for Standardization
ITE—Institute of Traffic Engineers
KCMA—Kitchen Cabinet Manufacturers Association
LMA—Laminating Materials Association
LPI—Lightning Protection Institute
MASH—Manual for Assessing Safety Hardware
MBMA—Metal Building Manufacturers Association
MILSPEC—Military Specification and Standards
MMA—Monorail Manufacturers Association
MSHA—Mine Safety and Health Administration
MSS—Manufacturers Standardization Society of The Valve and Fittings the Valve Industry, Inc.
MUTCD—Manual on Uniform Traffic Control Devices
NAAMM—National Association of Architectural Metal Manufacturers
NADCA—National Air Duct Cleaners Association
NAIMA—North American Insulation Manufacturers Association (The)
NBFU—National Board of Fire Underwriters
NCHRP—National Cooperative Highway Research Program
NCMA—National Concrete Masonry Association
NCPI—National Clay Pipe Institute
NEBB—Natural Environmental Balancing Bureau
NEC—National Electrical Code
NECA—National Electrical Contractors Association
NEMA—National Electrical Manufacturers Association
NEPCOAT—North East Protective Coatings Committee
NESC—National Electrical Safety Code
NETA—InterNational Testing Association
NETTCP—NorthEast Transportation Technician Certification Program
NFPA—National Fire Protection Association
NFRC—National Fenestration Rating Council
NHLA—National Hardwood Lumber Association
NICET—National Institute for Certification in Engineering Technologies
NIOSH—National Institute of Occupational Safety and Health
NIST—National Institute of Standards and Technology
NLGA—National Lumber Grades Authority
NOAA—National Oceanic and Atmospheric Administration
NRCA—National Roofing Contractors Association
NSF—NSF International
NTMA—National Terrazzo and Mosaic Association, Inc.

OEO—Office of Equal Opportunity
OSHA—Occupational Safety and Health Administration
PCA—Portland Cement Association
PCI—Precast/Prestressed Concrete Institute
PDI—Plumbing & Drainage Institute
PTI—Post-Tensioning Institute
PURA—Public Utilities Regulatory Authority
RMA—Rubber Manufacturers Association
SAE—SAE International
SDI—Steel Deck Institute *or*
.....—Steel Door Institute
SFPA—Southern Forest Products Association
SHRP—Strategic Highway Research Program
SJI—Steel Joist Institute
SMACNA—Sheet Metal and Air Conditioning Contractors National Association
SPIB—Southern Pine Inspection Bureau (The)
SPRI—Single Ply Roofing Institute
SSPC—Where reference is made to SSPC in the Contract, it refers by number, letter, or both, to the latest standard or tentative standard specification of The Society for Protective Coatings, Formerly the Steel Structures Painting Council, as to materials specifications, methods of testing, systems, procedures, inspection or other specification pertaining to any or all phases of cleaning or painting, whichever may apply.
SWRI—Sealant, Waterproofing, & Restoration Institute
TCA—Tile Council of America, Inc.
TIA—Telecommunications Industry Association
TIA/EIA—Telecommunications Industry Association/Electronics Industries Alliance
TPI—Truss Plate Institute, Inc.
TRB—Transportation Research Board
UFAS—Uniform Federal Accessibility Standards
UL—Underwriters Laboratories Inc.
USDA—United States Department of Agriculture
USGBC—U.S. Green Building Council
WCLIB—West Coast Lumber Inspection Bureau
WCSC—Window Covering Safety Council
WDMA—Window & Door Manufacturers Association
WWPA—Western Wood Products Association”

1.01.03 — Abbreviations and Terms:

Add the following abbreviations:

“ACSR – Aluminum Conductor, Steel Reinforced
AOEC – Area of Environmental Concern
APA – Aquifer Protection Area
AWG – American Wire Gauge
CMS – Changeable Message Sign
cu.dm - Cubic Decimeter

cu.m - Cubic Meters
CWI – Certified Welding Inspector
dm^3 - Cubic Decimeter
DMT – Division of Materials Testing
DTI – Direct Tension Indicator
est. – estimated
FRC – Fiberglass Reinforced Composite
HASP – Health and Safety Plan
m^2 - Square Meter
m^3 - Cubic Meters
MSDS—Material Safety Data Sheet(s)
mton - Metric Ton
NDT – non-destructive testing
PCC – Portland Cement Concrete
sq.m - Square Meter
SSA – Sole Source Aquifer
TL – Test Level
TMA – Truck Mounted Impact Attenuator
TMP – Transportation Management Plan
TTC – Temporary Traffic Control
Vert. M - Vertical Meter
vert.m - Vertical Meter
VMS – Variable Message Sign
VOC – Volatile Organic Compound
WSA – Temporary Waste Stockpile Area”

CONNECTICUT
SUPPLEMENTAL SPECIFICATION
SECTION 1.02
PROPOSAL REQUIREMENTS AND CONDITIONS

In the list of articles, make the following changes:

"1.02.02—Vacant
1.02.05—Vacant
1.02.06—Vacant
1.02.07—Vacant
1.02.08—Vacant
1.02.09—Vacant
1.02.10—Vacant
1.02.11—Vacant
1.02.14—Vacant
1.02.15—Vacant"

1.02.01 – Contract Bidding and Award:

Replace the entire article with the following:

"**1.02.01—Contract Bidding and Award:** All bids for construction contracts must be submitted electronically. It is the responsibility of each bidder and all other interested parties to obtain all bidding related information and documents from the Department of Administrative Services (DAS) State Contracting Portal.

Connecticut Department of Transportation bidding and other information and documents which are obtained from any other source must not be submitted to the Department. Reproduced, reformatted or altered forms of documents are not authorized or acceptable.

For information about the bidding and award of Department construction contracts, consult the "State of Connecticut Department of Transportation Construction Contract Bidding and Award Manual," available from the Division of Contracts. In order to be eligible for award of a Department construction contract, a bidder must follow the requirements of this Bid Manual, and all bidding and award matters regarding Department construction contracts shall be governed by the terms of the Bid Manual, unless treated otherwise in the Contract, including these Specifications."

Replace "**1.02.02—Competence of Bidder:** See Article 1.02.01." *with* "**1.02.02—Vacant**"

Replace "**1.02.05—Preparation of Proposals:** See Article 1.02.01." *with* "**1.02.05—Vacant**"

Replace "**1.02.06—Rejection of Non-responsive Proposals:** See Article 1.02.01." *with* "**1.02.06—Vacant**"

Replace "**1.02.07—Proposal Guaranty:** See Article 1.02.01." *with* "**1.02.07—Vacant**"

Replace "**1.02.08—Delivery of Proposal:** See Article 1.02.01." *with* "**1.02.08—Vacant**"

Replace "**1.02.09—Withdrawal of Proposals:** See Article 1.02.01." *with* "**1.02.09—Vacant**"

Replace "**1.02.10—Public Opening of Proposals:** See Article 1.02.01." *with* "**1.02.10—Vacant**"

Replace "**1.02.11—Miscellaneous Grounds for Rejection of Proposals:** See Article 1.02.01." *with* "**1.02.11—Vacant**"

Replace "**1.02.14—Sworn Statement by Bidder:** See Article 1.02.01." *with* "**1.02.14—Vacant**"

Replace "**1.02.15—Required Certifications of Eligibility to Bid:** See Article 1.02.01." *with* "**1.02.15—Vacant**"

CONNECTICUT
SUPPLEMENTAL SPECIFICATION
SECTION 1.03
AWARD AND EXECUTION OF CONTRACT

Replace Article 1.03.07 in its entirety with the following:

1.03.07—Insurance:

Coverage shall be on a primary basis.

The Contractor shall carry and maintain at all times during the term of the Contract the insurance coverages required by this Article and any additional coverages(s) or higher minimum insurance coverage amount(s) required by the Special Provisions of the Contract.

If the Project includes work on or adjacent to railroad property additional insurance may be required as specified by the railroad. Please refer to the Special Provisions for any additional insurance requirements by the railroad.

1. **Worker's Compensation Insurance:** With respect to all operations the Contractor performs and all those performed for it by subcontractors, the Contractor shall carry, and require each subcontractor to carry, Workers' Compensation insurance as required by the laws of the State of Connecticut.

Employer's Liability insurance shall be provided in amounts not less than $100,000 per accident for bodily injury by accident; $100,000 policy limit by disease and $100,000 per employee for bodily injury by disease. Each Workers' Compensation policy shall contain the U.S. Longshoreman's and Harbor Workers' Act endorsement when work is to be performed over or adjacent to navigable water.

2. **Commercial General Liability Insurance:** With respect to the operations the Contractor performs and also those performed for it by subcontractors, the Contractor shall carry, and require each subcontractor to carry, Commercial General Liability insurance, including Contractual Liability, Products and Completed Operations, Broad Form Property Damage and Independent Contractors.

Products and completed operations insurance for ongoing and completed operations shall be maintained for a period of one (1) year after the acceptance of the project by the Department in accordance with Article 1.08.14. See chart below for applicable minimum coverage amounts.

Contract Amount ($)	Minimum Single Occurrence Amount ($)	Minimum Annual Aggregate Amount ($)
0-2,000,000	1,000,000	2,000,000
>2,000,001-10,000,000	2,000,000	4,000,000
>10,000,000	4,000,000	8,000,000

In Facilities construction projects, if underground work is to be undertaken, each policy shall have coverage for and exclusions removed for “Explosion, Collapse and Underground” (“XCU”).

3. **Automobile Liability Insurance:** The Contractor shall obtain automobile liability insurance covering the operation of all motor vehicles, including those hired or borrowed, that are used in connection with the Project for all damages arising out of: (1) bodily injury to or death of all persons and/or (2) injury to or destruction of property; in any one accident or occurrence. This policy shall not be subject to an annual aggregate limitation. See chart above for applicable minimum coverage amounts.

4. **Owner’s and Contractor’s Protective Liability Insurance for and in the Name of the State:** With respect to the Contractor’s Project operations and also those of its subcontractors, the Contractor shall carry, for and on behalf of the State for each accident or occurrence resulting in damages from (1) bodily injury to or death of persons and/or (2) injury to or destruction of property. See chart below for applicable minimum coverage amounts.

Contract Amount ($)	Minimum Single Occurrence Amount ($)	Minimum Annual Aggregate Amount ($)
0 - 20 Million	1,000,000	1,000,000
20 Million - 50 Million	2,000,000	2,000,000
> 50 Million	4,000,000	4,000,000

5. **Railroad Protective Liability Insurance:** When the Contract involves work within fifty (50) feet of the railroad right-of-way or State-owned rail property, with respect to Project operations and also those of its subcontractors, the Contractor shall carry Railroad Protective Liability Insurance providing coverage of at least $2,000,000 for each accident or occurrence resulting in damages from (1) bodily injury to or death of all persons and/or (2) injury to or destruction of property, and subject to that limit per accident or occurrence, an aggregate coverage of at least $6,000,000 for all damages during the policy period, and with all entities falling within any of the following listed categories named as insured parties: (i) the owner of the railroad right-of-way, (ii) the owner of any railcar licensed or permitted to travel within that affected portion of railroad right-of-way, and (iii) the operator of any railcar licensed or permitted to travel within that affected portion of the railroad right-of-way, and with the State, if not falling within any of the above-listed categories, also named as an insured party.

6. **Blasting:** When explosives are to be used in the Project, the Commercial General Liability insurance policy shall include XCU coverage, in the same limits as the per occurrence policy limits.

7. **Protection and Indemnity Insurance for Marine Construction Operations in Navigable Waters:**

If a vessel of any kind will be involved in Project work, the Contractor shall obtain the following additional insurance coverage:

A. Protection and Indemnity Coverage of at least $300,000 per vessel or equal to at least the value of hull and machinery, whichever is greater.

B. If there is any limitation or exclusion with regard to crew and employees under the protection and indemnity form, the Contractor must obtain and keep in effect throughout the Project a workers' compensation policy, including coverage for operations under admiralty jurisdiction, with a limit of liability of at least $300,000 per accident or a limit equal to at least the value of the hull and machinery, whichever is greater, or for any amount otherwise required by statute.

8. **Builder's Risk Insurance:** For Facilities construction projects, the Contractor shall maintain comprehensive replacement cost builder's risk (completed value) insurance providing coverage for the entire work at the Project site, including all fixtures, machinery and equipment, any heating, cooling and constituting a permanent part of the building and shall cover portions of work located away from the site, but intended for use at the site. If it is determined that all or a portion of the project is located within an area designated as a Special Flood Hazard Area, the Contractor shall maintain flood insurance (no less than $10,000,000 sublimit). The State of Connecticut shall be named as Loss Payee. Equipment breakdown coverage may be sub limited to 50% of the project cost.

9. **Architects and Engineer's Professional Liability Insurance for Structural Engineer:** If required, limits will be specified in Article 1.03.07 of the Special Provisions of the Contract or Article 1.05.02.

10. **Umbrella Liability Insurance:** The Contractor may satisfy the minimum limits required for Commercial General Liability and Automobile Liability Insurance using Umbrella Liability Insurance. In the event that the Contractor obtains Umbrella Liability Insurance to meet the minimum coverage requirements for Commercial General Liability or Automobile Liability Insurance coverage, the Umbrella Liability Insurance policy shall have an annual aggregate at a limit not less than twice the single occurrence and must specifically endorse the State of Connecticut as an additional insured. Specifically for Bridge Projects with a low bid equal to or higher than $80,000,000, the Umbrella Liability Insurance policy must have a minimum limit of at least $25,000,000.

11**.** **Certificate of Insurance:** Before the Contract is executed, the Contractor must provide to the Department a certificate of insurance acceptable to the Commissioner and executed by an insurance company or companies satisfactory to the State of Connecticut for the insurance coverage(s) required by this Article and the Special

Provisions of the Contract. The Contractor shall maintain the required insurance coverage during the entire term of the Contract. The certificate of insurance must clearly include the name of the insured and identify the project for which it is being issued.

12. **Copies of Policies:** The Contractor shall provide, within five (5) business days, a copy or copies of all applicable insurance policies when requested by the State. In providing said policies, the Contractor may redact provisions of the policy that are proprietary. This provision shall survive the expiration or termination of the Contract.

13. **Sovereign Immunity:** The Contractor may not assert the defense of sovereign immunity in the adjustment of claims or in the defense of any claim or suit brought against the Contractor or the State, unless the State, in writing, requests that the Contractor do so or consents to its doing.

14. **Contractor Assumes Costs:** The Contractor shall assume and pay all costs and billings for premiums, deductibles, self-insured retentions and audit charges earned and payable under the required insurance.

15. **State Named as Additional Insured:** The State must be named as an additional insured party for the Commercial General Liability and Automobile Liability insurance policies required by this Article and the Special Provisions to the Contract, and any Umbrella Liability Insurance, as applicable, obtained in accordance with this Article. Each policy shall waive right of recovery (waiver of subrogation) against the State of Connecticut.

16. **Termination or Change of Insurance:**

A. The Contractor shall notify the Department of any cancelation of insurance carrier or change to the required insurance coverage by submitting a new insurance certificate to the Department immediately following said cancelation or change in required coverage.

B. It is the responsibility of the Contractor to maintain evidence of a current insurance coverage with the Department for the duration of contract. It is the responsibility of the Contractor to file with the Department all renewals and new certificates of insurance issued due to changes in policy terms or changes in insurance carriers prior to the expiration dates on the forms already on file with the Department.

17. **Duration of Coverage**. The Contractor shall keep all the required insurance in continuous effect until the date that the Department designates for the termination of the Contractor's responsibility, as defined by Article 1.08.14.

18. **Compensation:** There shall be no direct compensation allowed the Contractor on account of any premium or other charge necessary to obtain and keep in effect any insurance or bonds in connection with the Project, but the cost thereof shall be considered included in the general cost of the Project work.

CONNECTICUT
SUPPLEMENTAL SPECIFICATION
SECTION 1.05
CONTROL OF THE WORK

In the list of Articles, replace

"**1.05.02—Plans, Working Drawings and Shop Drawings**"
with "**1.05.02—Plans, Working Drawings, Shop Drawings, Product Data, Submittal Preparation and Processing, and Designers Action**"

replace

"**1.05.08—Vacant**"
with "**1.05.08—Schedules and Reports**"

In the list of Articles, after **1.05.16—Dimensions and Measurements** *add* "**1.05.17—Welding**"

1.05.02—Plans, Working Drawings and Shop Drawings

Delete the entire Article and replace with the following:

1.05.02—Plans, Working Drawings, Shop Drawings, Product Data, Submittal Preparation and Processing, and Designers Action:

1. Plans: The plans prepared by the Department show the details necessary to give a comprehensive idea of the construction contemplated under the Contract. The plans will generally show location, character, dimensions, and details necessary to complete the Project. If the plans do not show complete details, they will show the necessary dimensions and details, which when used along with the other Contract documents, will enable the Contractor to prepare working drawings, shop drawings or product data necessary to complete the Project.

2. Working Drawings: When required by the Contract, or when ordered to do so by the Engineer, the Contractor shall prepare and submit six printed copies and one electronic copy in a pdf file format of the working drawings, signed, sealed and dated by a qualified Professional Engineer licensed to practice in the State of Connecticut, for review. The drawings shall be submitted to the Assistant District Engineer sufficiently in advance of the work detailed, to allow for their review in accordance with the review periods specified in Subarticle 1.05.02-5 (including any necessary revisions, resubmittal, and final review).

There will be no direct payment for furnishing any working drawings, procedures or supporting calculations, but the cost thereof shall be considered as included in the general cost of the work.

a. Working Drawings for Permanent Construction: Drawings shall be submitted on 22 in x 34 in (559 mm x 864 mm) sheets with a border and title block similar to the Department standard. Calculations, procedures and other supporting data may be submitted in an 8-1/2 in x 11 in (216 mm x 279 mm) format.

   The Contractor shall supply to the Assistant District Engineer a certificate of insurance in accordance with Article 1.03.07 at the time that the working drawings for the Project are submitted.

   The Contractor's designer, who prepares the working drawings, shall secure and maintain at no direct cost to the State a Professional Liability Insurance Policy for errors and omissions in the minimum amount of $2,000,000 per error or omission. The Contractor's designer may elect to obtain a policy containing a maximum $250,000 deductible clause, but if the Contractor's designer should obtain a policy

containing such a clause, they shall be liable to the extent of at least the deductible amount. The Contractor's designer shall obtain the appropriate and proper endorsement of its Professional Liability Policy to cover the indemnification clause in this Contract, as the same relates to negligent acts, errors or omissions in the Project work performed by them. The Contractor's designer shall continue this liability insurance coverage for a period of (1) 3 years from the date of acceptance of the work by the Engineer, as evidenced by a State of Connecticut, Department of Transportation Form Number CON-500, entitled "Certificate of Acceptance of Work," issued to the Contractor; or (2) 3 years after the termination of the Contract, whichever is earlier, subject to the continued commercial availability of such insurance.

b. Working Drawings for Temporary Construction: The Contractor shall submit drawings, calculations, procedures and other supporting data in a format acceptable to the Assistant District Engineer.

3. Shop Drawings: When required by the Contract, or when ordered to do so by the Engineer, the Contractor shall prepare and submit six printed copies and one electronic copy in a pdf file format of the shop drawings to the Designer for review. Review timeframes and submission locations are specified in Subarticle 1.05.02-5.

Drawings shall be submitted on 22 in x 34 in (559 mm x 864 mm) sheets with an appropriate border and with a title block in the lower right-hand corner of each sheet. Procedures and other supporting data may be submitted on 8½ in x 11 in (216 mm x 279 mm) sheets.

There will be no direct payment for furnishing any shop drawings, but the cost thereof shall be considered as included in the general cost of the work.

4. Product Data: When required by the Contract, or when ordered to do so by the Engineer, the Contractor shall prepare and submit six printed copies and one electronic copy in a pdf file format of the product data.

The product data shall be submitted to the Designer for review, sufficiently in advance of the work detailed, to allow for their review in accordance with the review periods specified in Subarticle 1.05.02-5 (including any necessary revisions, resubmittal, and final review), and acquisition of materials, without causing a delay of the Project.

The Contractor shall submit the product data in a single submittal for each element of construction.

The Contractor shall mark each copy of the product data submittal to show applicable choices and options. Where product data includes information on several products that are not required, copies shall be marked to indicate the applicable information. Product data shall include the following information and confirmation of conformance with the Contract to the extent applicable: manufacturer's printed recommendations, compliance with recognized trade association standards, compliance with recognized testing agency standards, application of testing agency labels and seals, notation of coordination requirements, Contract item number, and any other information required by the individual Contract provisions.

There will be no direct payment for furnishing any product data, but the cost thereof shall be considered as included in the general cost of the work.

5. Submittal Preparation and Processing – Review Timeframes: The Contractor shall allow 30 calendar days for submittal review by the Department, from the date of receipt of printed copies in the appropriate Designer or Engineer's office. For any submittals marked with "Revise and Resubmit" or "Rejected," the Department is allowed an additional 20 calendar days for review of any resubmissions.

An extension of Contract time will not be authorized due to the Contractor's failure to transmit submittals sufficiently in advance of the work to permit processing.

The furnishing of shop drawings, working drawings or product data, any comments or suggestions by the Designer or Engineer concerning shop drawings, working drawings or product data, shall not relieve the Contractor of any of its responsibility for claims by the State or by third parties, as per Article 1.07.10.

The furnishing of the shop drawings, working drawings and product data shall not serve to relieve the Contractor of any part of its responsibility for the safety or the successful completion of the Project construction.

Submissions: Unless otherwise defined in the Contract, the Contractor shall transmit the working drawings, shop drawings and product data as follows:

(a) Working drawings for permanent construction, shop drawings, and product data shall be submitted to the Designer. A copy of the transmittal or cover letter shall be forwarded to the Assistant District Engineer of the administering Construction District.

(b) Working drawings for temporary construction shall be submitted to the Assistant District Engineer of the administering Construction District.

(c) If not provided in the Contract, the Contractor shall request a list detailing the delivery location and contact person for each type of submittal, from the administering Construction District.

6. Designers Action: The Designer or Engineer will review each submittal, mark each with a uniform, self-explanatory action stamp, and return the stamped submittal promptly to the Contractor. The Contractor shall not proceed with the part of the Project covered by the submittal until the submittal is marked “No Exceptions Noted” or “Exceptions as Noted” by the Designer or Engineer. The Contractor shall retain sole responsibility for compliance with all Contract requirements. The stamp will be marked as follows to indicate the action taken:

(a) If submittals are marked “No Exceptions Noted,” the Designer or Engineer has not observed any statement or feature that appears to deviate from the Contract requirements. This disposition is contingent on being able to execute any manufacturer’s written warranty in compliance with the Contract provisions. The Contractor may proceed with the work covered in the submittal.

(b) If submittals are marked “Exceptions as Noted” the considerations or changes noted by the Designer or Engineer are necessary in order for the submittal to comply with Contract requirements. The Contractor shall review the required changes and inform the Designer or Engineer if they feel the changes violate a provision of the Contract or would lessen the warranty coverage.

(c) If submittals are marked “Revise and Resubmit,” the Contractor shall revise the submittals to address the deficiencies or provide additional information as noted by the Designer or Engineer. The Contractor shall allow an additional review period as specified in Subarticle 1.05.02-5.

(d) If submittals are marked “Rejected,” the Contractor shall prepare and submit a new submittal in accordance with the Designer’s or Engineer’s notations. The resubmissions require an additional review and determination by the Designer or Engineer. The Contractor shall allow an additional review period as specified in Subarticle 1.05.02-5.”

1.05.05—Cooperation by Contractor:

After the second paragraph, add the following:

“ Voluntary Partnering: The Connecticut Department of Transportation ("Department") wants to establish a cohesive partnership with the Contractor and its principal subcontractors on the Project, so that the partnership can draw on the strengths of each organization in order to identify and pursue the partners' mutual Project goals. Chief among those will be the effective and efficient completion of the Project, within budget, on schedule, and in accordance with applicable plans, specifications, and other Contract provisions.

If the Contractor believes at any point before or during Project construction that the creation of formal partnering between itself and the Department, with the use of a third-party facilitator, would help the Contractor and the Department ("Partners") to reach these goals, the Contractor may submit a written request to the District Engineer of the District in which the Project will be constructed for the establishment of formal partnering between the Parties. If the Contractor makes such a request, the Department will engage in that partnering.

Any costs incurred by the Partners jointly in connection with Project partnering activities, to the extent that those costs are recognized as legitimate and appropriate by both

Partners, will be shared equally between them. Any other costs incurred because of partnering activities will be borne by the Partner that incurred them.

If the Contractor and the Department decide to pursue a formal partnering initiative, the Contractor and The Department will arrange first to meet in order to select a third-party partnering facilitator and to plan a partnering development and team-building workshop. After they agree upon the services to be performed by the facilitator and the range of compensation for the facilitator that would be acceptable to them, the Contractor will contract accordingly for the services of said facilitator. The Department will reimburse the Contractor for fifty percent (50%) of the payments made under that contract, so long as the activities paid for were appropriate and within the contemplation of the Partners.

At the Partners' initial partnering meeting, the Partners will also determine who should attend the first partnering workshop, what the workshop's agenda will be, how long the workshop should last, and when and where it will be held. Unless the Partners agree otherwise, attendance at the first partnering workshop will be mandatory for the Department's District Engineer for the Project and the Department's other key Project personnel, the Contractor's on-Site Project manager and other key supervisory Project personnel, and, if the Contractor agrees to it, the key supervisory personnel of the Contractor's principal Project subcontractors. The Partners will also request that the Project design engineers and key local government personnel send Regional/District and Corporate/State-level managers to the workshop and direct them to participate in Project partnering activities as and when requested to do so by the Partners.

With the agreement of the Partners, follow-up Project partnering workshops will be held periodically until the Department closes out the Contract.

If the Partners agree on a formal partnering charter for the Project, the establishment of that charter will not change the legal relationship of the Partners to the Contract; it will not alter, supplement, or eliminate any of the Partners' rights or obligations under the Contract."

1.05.08–Vacant:

Replace with the following:

"**1.05.08—SCHEDULES AND REPORTS:**

When a project coordinator is not required by the Contract the following shall apply:

Baseline Bar Chart Construction Schedule: Within 20 calendar days after contract award the Contractor shall develop a comprehensive bar chart as a baseline schedule for the project. The bar chart schedule shall be submitted to the Engineer for approval and shall be based on the following guidelines:

1. The bar chart schedule shall contain a list of activities that represents the major activities of the project. At a minimum, this list should include a breakdown by individual structure or stage, including major components of each. The bar chart schedule shall contain sufficient detail to describe the progression of the work in a comprehensive manner. As a guide, 10 to 15 bar chart activities should be provided for each $1 million of contract value.

The following list is provided as an example only and is not meant to be all-inclusive or all-applicable:

Project Constraints

-Winter shutdowns
-Environmental permits/application time of year restrictions
-Milestones
-Third Party approvals

-Long lead time items (procurement and fabrication of major elements)
-Adjacent Projects or work by others

Award
Notice to Proceed
Signing (Construction, temporary, permanent by location)
Mobilization
Permits as required
Field Office
Utility Relocations
Submittals/shop drawings/working drawings/product data
Construction of Waste Stock pile area
Clearing and Grubbing
Earthwork (Borrow, earth ex, rock ex etc.)
Traffic control items (including illumination and signalization)
Pavement markings
Roadway Construction (Breakdown into components)
Drainage (Breakdown into components)
Culverts
Plantings (including turf establishment)
Semi-final inspection
Final Cleanup

As required the following may supplement the activities listed above for the specific project types indicated:

a. For bridges and other structures, include major components such as abutments, wingwalls, piers, decks and retaining walls; further breakdown by footings, wall sections, parapets etc.

   Temporary Earth Retention Systems
   Cofferdam and Dewatering
   Structure Excavation
   Piles/test piles
   Temporary Structures
   Removal of Superstructure
   Bearing Pads
   Structural Steel (Breakdown by fabrication, delivery, installation, painting etc.)
   Bridge deck

b. Multiple location projects such as traffic signal, incident management, lighting, planting and guiderail projects will be broken down first by location and then by operation. Other major activities of these types of projects should include, but are not limited to:

   Installation of anchors
   Driving posts
   Foundations
   Trenching and Backfilling
   Installation of Span poles/mast arms
   Installation of luminaries

Installation of cameras
Installation of VMS
Hanging signal heads
Sawcut loops
Energizing equipment

c. Facility Projects – Facilities construction shall reflect the same breakdown of the Project as the Schedule of Values:

Division 2 – Existing Conditions
Division 3 – Concrete
Division 4 – Masonry
Division 5 – Metals
Division 6 – Wood, Plastic, and Composites
Division 7 – Thermal and Moisture Protection
Division 8 – Openings
Division 9 – Finishes
Division 10 – Specialties
Division 11 – Equipment
Division 12 - Furnishings
Division 13 – Special Construction
Division 14 – Conveying Equipment
Division 21 – Fire Suppression
Division 22 – Plumbing
Division 23 – Heating, Ventilating, and Air Conditioning
Division 26 – Electrical
Division 27 – Communications
Division 28 – Electronic Safety and Security
Division 31 – Earthwork
Division 32 – Exterior Improvements
Division 33 - Utilities

2. If the Engineer determines that additional detail is necessary, the Contractor shall provide it.
3. Each activity shall have a separate schedule bar. The schedule timeline shall be broken into weekly time periods with a vertical line to identify the first working day of each week.
4. The bar chart schedule shall show relationships among activities. The critical path for the Project shall be clearly defined on the schedule. The schedule shall show milestones for major elements of work, and shall be prepared on a sheet, or series of sheets of sufficient width to show data for the entire construction period.
5. If scheduling software is used to create the bar chart schedule, related reports such as a predecessor and successor report, a sort by total float, and a sort by early start shall also be submitted.
6. Project activities shall be scheduled to demonstrate that the construction completion date for the Project will occur prior to expiration of the Contract time. In addition, the schedule shall demonstrate conformance with any other dates stipulated in the Contract.
7. The Contractor is responsible to inform its subcontractor(s) and supplier(s) of the project schedule and any relevant updates.

8. There will be no direct payment for furnishing schedules, the cost thereof shall be considered as included in the general cost of the work.
9. For projects without a Mobilization item, 5% of the contract value will be withheld until such time as the Baseline Schedule is approved.

Monthly Updates: No later than the 10th day of each month, unless directed otherwise by the Engineer, the Contractor shall deliver to the Engineer three copies of the schedule to show the work actually accomplished during the preceding month, the actual time spent on each activity, and the estimated time needed to complete any activity which has been started but not completed. Each time bar shall indicate, in 10% increments, the estimated percentage of that activity which remains to be completed. As the Project progresses, the Contractor shall place a contrasting mark in each bar to indicate the actual percentage of the activity that has been completed.

The monthly update shall include revisions of the schedule necessitated by revisions to the Project directed by the Engineer (including, but not limited to extra work), during the month preceding the update. Similarly, any changes of the schedule required due to changes in the Contractor's planning or progress shall also be included. The Engineer reserves the right to reject any such revisions. If the schedule revisions extend the contract completion date, due to extra or added work or delays beyond the control of the Contractor, the Contractor shall submit a request in writing for an extension of time in accordance with Article 1.08.08. This request shall be supported by an analysis of the schedules submitted previously.

Any schedule revisions shall be identified and explained in a cover letter accompanying the monthly update. The letter shall also describe in general terms the progress of the Project since the last schedule update and shall identify any items of special interest.

If the Contractor fails to provide monthly schedule updates, the Engineer has the right to hold 10% of the monthly estimated payment, or $5,000, whichever is less, until such time as an update has been provided in accordance with this provision.

Biweekly Schedules: Each week, the Contractor shall submit to the Engineer a two week look-ahead schedule. This short-term schedule may be handwritten but shall clearly indicate all work planned for the following two week period.

Recovery Schedules: If the updated schedule indicates that the Project has fallen behind schedule, the Contractor shall either submit a time extension request in accordance with 1.08.08 or immediately institute steps acceptable to the Engineer to improve its progress of the Project. In such a case, the Contractor shall submit a recovery plan, as may be deemed necessary by the Engineer, to demonstrate the manner in which an acceptable rate of progress will be regained."

Article 1.05.12–Payrolls:

Replace the first paragraph with the following:

" For each week of the Project from the first week during which an employee of the Contractor does Project work to which prevailing wage requirements apply, until the last week on which such an employee does such work, the Contractor shall furnish to the Engineer certified copies of payrolls showing:

(a) the names of the employees who worked on the Project and whose work is subject to prevailing wage requirements,
(b) the specific days and hours and numbers of hours that each such employee worked on the Project, and
(c) the amount of money paid to each such employee for Project work.

Each such payroll shall include the statement(s) of compliance with prevailing wage laws required by the State of Connecticut and, if applicable, by the Federal government. Said payrolls must contain all information required by Connecticut General Statutes Section 31-53 (as it may be revised). For contracts subject to Federal prevailing wage requirements, each payroll shall also contain the information required by the Davis Bacon and Related Acts (DBR). All of the payroll requirements in this Article shall also apply to the work of any subcontractor or other party that performs work on the Project site, and the Contractor shall be responsible for ensuring that each such party meets said requirements."

Article 1.05.15–Markings for Underground Facilities:

Replace the beginning of the first sentence with the following:

"In conformance with Sections 16-345 through 16-359 of the Regulations of the PURA state statutes, the Contractor is responsible for notifying 'Call Before You Dig' ..."

After **Article 1.05.16–Dimensions and Measurements**, *add the following article:*

"**1.05.17 - WELDING**

The Contractor shall ensure that all welding of materials permanently incorporated into the work, and welding of materials used temporarily during construction of the work is performed in accordance with the following codes:

- American Welding Society (AWS) Structural Welding Code – Steel – ANSI/AWS D1.1: Miscellaneous steel items that are statically loaded including but not limited to columns, and floor beams in buildings, railings, sign supports, cofferdams, tubular items, and modifications to existing statically loaded structures.
- AWS Structural Welding Code – Aluminum – AWS D1.2/D1.2M: Any aluminum structure or member including but not limited to brackets, light standards, and poles.
- AWS Structural Welding Code – Sheet Steel – AWS D1.3/D1.3M: Sheet steel and cold-formed members 0.18 in.(4.6 mm) or less in thickness used as, but not limited, to decking and stay-in-place forms.
- AWS Structural Welding Code – Reinforcing Steel – AWS D1.4/D1.4M: Steel material used in the reinforcement of cast-in-place or pre-cast Portland cement concrete elements including but not limited to bridge decks, catch basin components, walls, beams, deck units, and girders.
- AASHTO/AWS – Bridge Welding Code, AASHTO/AWS D1.5/D1.5M: Steel highway bridges and other dynamically loaded steel structures. Also includes sign supports, and any other fracture critical structure.

The edition governing the work shall be in effect on the date the Contract was advertised for solicitation of bids.

The Contractor is responsible to provide a Certified Welding Inspector in accordance with the above noted codes. The cost for this service is included in the general cost of the work.

All welders shall be certified by the Engineer in accordance with Section 6.03."

CONNECTICUT
SUPPLEMENTAL SPECIFICATION
SECTION 1.07
LEGAL RELATIONS AND RESPONSIBILITIES

In the list of Articles, change **"1.07.07 – Public Convenience and Safety"** *to* **"1.07.07 – Safety and Public Convenience."**

1.07.05 – Load Restrictions

Delete the entire article and replace with the following:

"**1.07.05 – Load Restrictions**

(a) Vehicle Weights: This subarticle will apply to travel both on existing pavements and pavements under construction. The Contractor shall comply with all legal load restrictions as to vehicle size, the gross weight of vehicles, and the axle weight of vehicles while hauling materials. Throughout the duration of the contract, the Contractor shall take precautions to ensure existing and newly installed roadway structures and appurtenances are not damaged by construction vehicles or operations.

Unless otherwise noted in contract specifications or plans, on and off road equipment of the Contractor, either loaded or unloaded, will not be allowed to travel across any bridge or on any highway when such a vehicle exceeds the statutory limit or posted limit of such bridge or highway. Should such movement of equipment become necessary the Contractor shall apply for a permit from the Department for such travel, as provided in the Connecticut General Statutes (CGS). The movement of any such vehicles within the project limits or detour routes shall be submitted to the Engineer for project record. Such permit or submittal will not excuse the Contractor from liability for damage to the highway caused by its equipment.

The Contractor is subject to fines, assessments and other penalties that may be levied as a result of violations by its employees or agents of the legal restrictions as to vehicle size and weight.

(b) Storage of Construction Materials/Equipment on Structures: Storage is determined to be non-operating equipment or material. The Contractor shall not exceed the statutory limit or posted limit for either an existing or new structure when storing materials and/or construction equipment. When a structure is not posted, then the maximum weight of equipment or materials stored in each 12 foot wide travel lane of any given span shall be limited to 750 pounds per linear foot combined with a 20,000 pound concentrated load located anywhere within the subject lane. If anticipated storage of equipment or material exceeds the above provision, then the Contractor shall submit his proposal of storage supported by calculations stamped by a Professional Engineer registered in the State of Connecticut, to the Engineer for approval 14 days prior to the storage operation. Operations related to structural steel demolition or erection shall follow the guidelines under Section 6.03. All other submittals shall include a detailed description of the material/equipment to be stored, the quantity of storage if it is stockpiled materials, the storage location, gross weight with supporting calculations if applicable, anticipated duration of storage and any environmental safety, or traffic protection that may be required. Storage location on the structure shall be clearly defined in the field. If structures are in a state of staged construction or demolition, additional structural analysis may be required prior to authorization of storage."

1.07.07 – Safety and Public Convenience

Change the title of Article 1.07.07 to read **"1.07.07 – Safety and Public Convenience"** *and change the last sentence of the seventh paragraph to read as follows:*

"The Contractor must make available for reference in its field office, throughout the duration of the Project, a copy of the Safety Plan and the latest edition, including all supplements, of the CFR pertaining to OSHA."

After the ninth paragraph insert the following:

" Before beginning work on the Project, the Contractor shall have a Safety Plan on file with the Department. The Safety Plan shall include the policies and procedures necessary for the Contractor to comply with OSHA and other pertinent regulatory rules, regulations and guidelines. The Safety Plan may be a comprehensive company-wide plan provided it addresses the scope and type of work contemplated by the Contract. The Safety Plan shall address all the requirements of this Section and any applicable State or Federal regulations, and shall be revised and updated as necessary.

The following elements shall be included in the Safety Plan:

1. General introduction describing the scope and applicability of the Safety Plan.
2. Identification of key staff responsible for the implementation and monitoring of the Contractor's Safety Plan, and their roles and responsibilities for safety.
3. Training requirements relative to safety.
4. Safety rules and checklists specific to the types of work generally performed by the Contractor.
5. Record-keeping and reporting requirements.
6. Identification of special hazards related to specific work elements.

The Contractor is responsible for the Safety Plan. Pursuant to Article 1.07.10, the Contractor shall indemnify, and save harmless the State from any and all liability related to any violation of the Safety Plan."

1.07.18 – Use of State Property

After Subarticle **(h)** *add the following sentence:*

"Gore areas are not available for disposal of surplus material."

CONNECTICUT
SUPPLEMENTAL SPECIFICATION
SECTION 1.08
PROSECUTION AND PROGRESS

1.08.01 – Transfer of Work or Contract:

Replace the last paragraph with the following paragraphs:

" The Contractor shall not sublet, sell, transfer, assign, or otherwise dispose of the Contract or any portion thereof, or of the work provided for therein, or of its right, title, or interest therein, to any individual or entity without the written consent of the Commissioner. No payment will be made for such work until written consent is provided by the Commissioner.

The Contractor shall pay the subcontractor for work performed within thirty (30) days after the Contractor receives payment for the work performed by the subcontractor. Withholding retainage by the Contractor, subcontractor or lower tier subcontractors is not allowed.

Payment for work that has been performed by a subcontractor does not eliminate the Contractor's responsibilities for all the work as defined in Article 1.07.12, "Contractor's Responsibility for Work."

Payment for work that has been performed by a subcontractor also does not release the subcontractor from its responsibility for maintenance and other periods of subcontractor responsibility specified for the subcontractor's items of work. Failure of a subcontractor to meet its maintenance, warranty or defective work responsibilities may result in administrative action on future Department contracts.

For any dispute regarding prompt payment, the alternate dispute resolution provisions of this article shall apply.

The above requirements are also applicable to all sub-tier subcontractors and the above provisions shall be made a part of all subcontract agreements.

Failure of the Contractor to comply with the provisions of this section may result in a finding that the Contractor is nonresponsible as a bidder for a Department contract."

1.08.07 – Determination of Contract Time:

Replace the first paragraph with the following:

" Unless the Contract requires the Project completion by a specified date, the number of calendar days allowed for the completion of the Project will be fixed by the Department, will be stated in the Contract, and will be known (with any subsequent adjustments) as the "Contract time." If at any time the Contractor submits a schedule showing completion of the work more than 30 calendar days in advance of the Contract completion date, the Department will issue a no-cost construction order revising the allowable Contract time to that shown on the Contractor's schedule."

Replace the fifth paragraph with the following:

“ The total elapsed time in calendar days, computed as described above, from the commencement date specified in the Engineer's "Notice to Proceed" to the “Substantial Completion” date specified in the Engineer's "Notice of Substantial Completion" shall be considered as the time used in the performance of the Contract work.”

1.08.09 – Failure to Complete Work on Time:

Replace the second paragraph with the following:

“ If the last day of the initial Contract time or the initial Contract date determined for Substantial Completion is before December 1 in the given year, liquidated damages as specified in the Contract shall be assessed against the Contractor per calendar day (including any days during a winter shutdown period) from that day until the date on which the Project is substantially completed.”

1.08.12—Final Inspection:

Replace the first paragraph with the following:

“ If the Engineer determines that the work may be substantially complete, a Semi Final Inspection will be held as soon as practical. After the Semi Final Inspection is held and the Engineer determines that the requirements for Substantial Completion have been satisfied the Engineer will prepare a “Notice of Substantial Completion”.

When the Contractor has completed all work listed in the “Notice of Substantial Completion” the Contractor shall prepare a written notice requesting a Final Inspection and a “Certificate of Acceptance of Work”. The Engineer will hold an Inspection of the Project as soon as practical after the Engineer determines that the Project may be completed. If the Engineer deems the Project complete, said inspection shall constitute the Final Inspection, and the Engineer will notify the Contractor in writing that the Final Inspection has been performed.”

1.08.13 – Acceptance of Work and Termination of the Contractor’s Responsibility:

Replace the only paragraph with the following:

“ The Contractor’s responsibility for non-administrative Project work will be considered terminated when the final inspection has been held, any required additional work and final cleaning-up have been completed, all final operation and maintenance manuals have been submitted, and all of the Contractor’s equipment and construction signs have been removed from the Project site. When these requirements have been met to the satisfaction of the Engineer, the Commissioner will accept the work by certifying in writing to the Contractor that the non-administrative Project work has been completed.”

CONNECTICUT
SUPPLEMENTAL SPECIFICATION
SECTION 1.09
MEASUREMENT AND PAYMENT

1.09.04 – Extra and Cost-Plus Work

Delete the word "bonding" under section (a) Labor, (3).

Delete existing subarticle (e) and replace with the following:

"**(e) Administrative Expense:** When extra work on a cost-plus basis is performed by an authorized subcontractor, the Department will pay the Contractor an additional 7.5% for that work; such payment will be in addition to the percentage payments described in (a), (b), (c) and (d) above, as a reimbursement for the Contractor's administrative expense in connection with such work. Approval of such additional payments will be given only after the Contractor provides to the Engineer receipted invoices for all relevant costs."

1.09.06 – Partial Payments:

In the first paragraph under **A. Monthly and Semi-monthly Estimates:**, *delete the second, third and fourth sentences and replace the remainder of subarticle (1) with the following:*

"Retainage will not be held.

Exceptions may be made as follows:

(a) When not in conflict with the interests of the State, the Contractor may request, and the Engineer may make, semi-monthly estimates for payment.
(b) If, in the judgment of the Assistant District Engineer, the Project is not proceeding in accordance with the Contract the Engineer may decline to make a payment estimate.
(c) If the total value of the Project work complete since the last estimate amounts to less than $2,500 the Engineer also may decline to make a payment estimate."

Replace the first paragraph of subarticle **B. Payment for Stored Materials:** *with the following:*

"**B. Payment for Stored Materials:** Non-perishable materials that are required for Project construction and that the Contractor has produced or purchased specifically for incorporation into the Project, but which have not yet been so incorporated, may be included in a payment estimate if

(i) the materials meet all applicable Contract specifications,
(ii) the materials have been delivered to the Project site or to another location approved by the Engineer, and

(iii) the Contractor has submitted to the Engineer, as evidence of the Contractor's purchase of the materials, either a copy of a receipted bill for same or a Certificate of Title to the materials, in the form approved by the Department, duly-executed by the Contractor and Vendor.

The Engineer will decide at what fair and appropriate fraction of the applicable Contract price such materials may be included in a payment estimate."

1.09.07 – Final Payment:

Replace the entire article with the following:

"**1.09.07 – Final Payment:** When the Commissioner has accepted the Project in accordance with Article 1.08.14, the Engineer will prepare a final payment estimate."

CONNECTICUT
SUPPLEMENTAL SPECIFICATION
SECTION 1.10
ENVIRONMENTAL COMPLIANCE

Add the following Article:

"**1.10.08 – VEHICLE EMISSIONS**

All motor vehicles and/or construction equipment (both on-highway and off-road) shall comply with all pertinent State and Federal regulations relative to exhaust emission controls and safety.

The Contractor shall establish staging zones for vehicles that are waiting to load or unload at the contract area. Such zones shall be located where the emissions from the vehicles will have minimum impact on abutters and the general public.

Idling of delivery trucks, dump trucks, and other equipment shall not be permitted in excess of 3 minutes during periods of non-activity except as allowed by the Regulations of Connecticut State Agencies Section 22a-174-18(b)(3)(c):

No mobile source engine shall be allowed to operate for more than three (3) consecutive minutes when the mobile source is not in motion, except as follows:

(i) When a mobile source is forced to remain motionless because of traffic conditions or mechanical difficulties over which the operator has no control,

(ii) When it is necessary to operate defrosting, heating or cooling equipment to ensure the safety or health of the driver or passengers,

(iii) When it is necessary to operate auxiliary equipment that is located in or on the mobile source to accomplish the intended use of the mobile source,

(iv) To bring the mobile source to the manufacturer's recommended operating temperature,

(v) When the outdoor temperature is below twenty degrees Fahrenheit (20 degrees F) [negative seven degrees Celsius (-7 degrees C)],

(vi) When the mobile source is undergoing maintenance that requires such mobile source be operated for more than three (3) consecutive minutes, or

(vii) When a mobile source is in queue to be inspected by U.S. military personnel prior to gaining access to a U.S. military installation.

All work shall be conducted to ensure that no harmful effects are caused to adjacent sensitive receptors. Sensitive receptors include but are not limited to hospitals, schools, daycare facilities, elderly housing and convalescent facilities. Engine exhaust shall be located away from fresh air intakes, air conditioners, and windows.

A Vehicle Emissions Mitigation plan will be required for areas where extensive work will be performed within (less than 50 feet (15 meters)) to sensitive receptors. No work will proceed until a sequence of construction and a Vehicle Emissions Mitigation plan is submitted in writing to the Engineer for review and all comments are addressed in a manner acceptable to the Engineer. The mitigation plan must address the control of vehicle emissions from all vehicles and construction equipment.

Any costs associated with this "Vehicle Emissions" article shall be included in the general cost of the Contract. In addition, there shall be no time granted to the contractor for compliance with this notice. The contractor's compliance with this notice and any associated regulations shall not be grounds for claims as outlined in Section 1.11 – "Claims.""

CONNECTICUT
SUPPLEMENTAL SPECIFICATION
SECTION 1.11
CLAIMS

Add the following Section:

SECTION 1.11
CLAIMS

1.11.01 – General
1.11.02 – Notice of Claim
1.11.03 – Record Keeping
1.11.04 – Claim Compensation
1.11.05 – Required Claim Documentation
1.11.06 – Auditing of Claims

1.11.01 – General: When filing a formal claim under Section 4-61 (referred to as "Section 4-61" below) of the C.G.S. (as revised), either as a lawsuit in the Superior Court or as a demand for arbitration, the Contractor must follow the procedures and comply with the requirements set forth in this Section of the Specifications. This Section does not, unless so specified, govern informal claims for additional compensation which the Contractor may bring before the Department. The Contractor should understand, however, that the Department may need, before the Department can resolve such a claim, the same kinds of documentation and other substantiation that it requires under this Section. It is the intent of the Department to compensate the Contractor for actual increased costs caused by or arising from acts or omissions on the part of the Department that violate legal or contractual duties owed to the Contractor by the Department.

1.11.02 – Notice of Claim: Whenever the Contractor intends to file a formal claim against the Department under Section 4-61, seeking compensation for additional costs, the Contractor shall notify the Commissioner in writing (in strict compliance with Section 4-61) of the details of said claim. Such written notice shall contain all pertinent information described in Article 1.11.05 below.

Once formal notice of a claim under C.G.S. Section 4-61 (b) (as revised) has been given to the Commissioner, the claimant may not change the claim in any way, in either concept or monetary amount, (1) without filing a new notice of claim and demand for arbitration to reflect any such change and (2) without the minimum period of six months after filing of the new demand commencing again and running before any hearing on the merits of the claim may be held. The only exception to this limitation will be for damages that continue to accrue after submission of the notice, in ways described and anticipated in the notice.

1.11.03 – Record Keeping: The Contractor shall keep daily records of all costs incurred in connection with its construction-related activities on behalf of the Department. These daily records shall identify each aspect of the Project affected by

matters related to any claim for additional compensation that the Contractor has filed, intends to file, or has reason to believe that it may file against the Department; the specific Project locations where Project work has been so affected; the number of people working on the affected aspects of the Project at the pertinent time(s); and the types and number of pieces of equipment on the Project site at the pertinent time(s). If possible, any potential or anticipated effect on the Project's progress or schedule which may result in a claim by the Contractor should also be noted contemporaneously with the cause of the effect, or as soon thereafter as possible.

1.11.04 – Claim Compensation: The payment of any claim, or any portion thereof, that is deemed valid by the Engineer shall be made in accordance with the following provisions of this Article:

(a) Compensable Items: The liability of the Department for claims will be limited to the following specifically-identified items of cost, insofar as they have not otherwise been paid for by the Department, and insofar as they were caused solely by the actions or omissions of the Department or its agents (except that with regard to payment for extra work, the Department will pay to the Contractor the mark-ups provided for in Article 1.04.05.):

(1) Additional Project-site labor expenses.
(2) Additional costs for materials.
(3) Additional, unabsorbed Project-site overhead (**e.g.**, for mobilization and demobilization).
(4) Additional costs for active equipment.
(5) For each day of Project delay or suspension caused solely by actions or omissions of the Department, either
    (i) an additional ten percent (10%) of the total amount of the costs identified in Subarticles (1) through (4) above; except that if the delay or suspension period prevented the Contractor from incurring enough Project costs under Subarticles (1) through (4) during that period to require a payment by the Department that would be greater than the payment described in subparagraph (ii) below, then the payment for affected home office overhead and profit shall instead be made in the following *per diem* amount:
    (ii) six percent (6%) of the original total Contract amount divided by the original number of days of Contract time.

Payment under either (i) or (ii) hereof shall be deemed to be complete and mutually-satisfactory compensation for any unabsorbed home office overhead and any profit related to the period of delay or suspension.

(6) Additional equipment costs. Only actual equipment costs shall be used in the calculation of any compensation to be made in response to claims for additional Project compensation. Actual equipment costs shall be based upon records kept in the normal course of business and in accordance with generally-accepted accounting principles. Under no circumstances shall Blue Book or other guide or rental rates be used for this purpose (unless the Contractor had to rent the equipment from an unrelated party, in which case the actual rental charges paid by the Contractor, so long as they are reasonable, shall be used). Idle equipment, for instance, shall be paid for based only on its actual cost to the Contractor.

(7) Subcontractor costs limited to, and determined in accordance with, Subarticles (1), (2), (3), (4), and (5) above and applicable statutory and case law. Such subcontractor costs may be paid for by the Department only (a) in the context of an informal claims settlement or (b) if the Contractor has itself paid or legally-assumed, present unconditional liability for those subcontractor costs.

(b) Non-Compensable Items: The Department will have no liability for the following specifically-identified non-compensable items:

(1) Profit, in excess of that provided for herein.
(2) Loss of anticipated profit.
(3) Loss of bidding opportunities.
(4) Reduction of bidding capacity.
(5) Home office overhead in excess of that provided for in Article 1.11.04(a)(5) hereof.
(6) Attorneys fees, claims preparation expenses, or other costs of claims proceedings or resolution.
(7) Any other consequential or indirect expenses or costs, such as tort damages, or any other form of expense or damages not provided for in these Specifications or elsewhere in the Contract.

1.11.05 – Required Claim Documentation: All claims shall be submitted in writing to the Commissioner, and shall be sufficient in detail to enable the Engineer to ascertain the basis and the amount of each claim, and to investigate and evaluate each claim in detail. As a minimum, the Contractor must provide the following information for each and every claim and sub-claim asserted:

(a) A detailed factual statement of the claim, with all dates, locations and items of work pertinent to the claim.
(b) A statement of whether each requested additional amount of compensation or extension of time is based on provisions of the Contract or on an alleged breach of the Contract. Each supporting or breached Contract provision and a statement of the reasons why each such provision supports the claim, must be specifically identified or explained.
(c) Excerpts from manuals or other texts which are standard in the industry, if available, that support the Contractor's claim.
(d) The details of the circumstances that gave rise to the claim.
(e) The date(s) on which any and all events resulting in the claim occurred, and the date(s) on which conditions resulting in the claim first became evident to the Contractor.
(f) Specific identification of any pertinent document, and detailed description of the substance of any material oral communication, relating to the substance of such claim.
(g) If an extension of time is sought, the specific dates and number of days for which it is sought, and the basis or bases for the extension sought. A critical path method, bar chart, or other type of graphical schedule that supports the extension must be submitted.
(h) When submitting any claim over $50,000, the Contractor shall certify in writing, under oath and in accordance with the formalities required by the contract, as to the following:
    (1) That supporting data is accurate and complete to the Contractors best

knowledge and belief;

(2) That the amount of the dispute and the dispute itself accurately reflects what the Contractor in good faith believes to be the Departments liability;

(3) The certification shall be executed by:

a. If the Contractor is an individual, the certification shall be executed by that individual.

b. If the Contractor is not an individual, the certification shall be executed by a senior company official in charge at the Contractor's plant or location involved or an officer or general partner of the Contractor having overall responsibility for the conduct of the Contractors affairs.

1.11.06 – Auditing of Claims: All claims filed against the Department shall be subject to audit by the Department or its agents at any time following the filing of such claim. The Contractor and its subcontractors and suppliers shall cooperate fully with the Department's auditors. Failure of the Contractor**,** its subcontractors, or its suppliers to maintain and retain sufficient records to allow the Department or its agents to fully evaluate the claim shall constitute a waiver of any portion of such claim that cannot be verified by specific, adequate, contemporaneous records, and shall bar recovery on any claim or any portion of a claim for which such verification is not produced. Without limiting the foregoing requirements, and as a minimum, the Contractor shall make available to the Department and its agents the following documents in connection with any claim that the Contractor submits:

(1) Daily time sheets and foreman's daily reports.
(2) Union agreements, if any.
(3) Insurance, welfare, and benefits records.
(4) Payroll register.
(5) Earnings records.
(6) Payroll tax returns.
(7) Records of property tax payments.
(8) Material invoices, purchase orders, and all material and supply acquisition contracts.
(9) Materials cost distribution worksheets.
(10) Equipment records (list of company equipment, rates, etc.).
(11) Vendor rental agreements
(12) Subcontractor invoices to the Contractor, and the Contractor's certificates of payments to subcontractors.
(13) Subcontractor payment certificates.
(14) Canceled checks (payroll and vendors).
(15) Job cost reports.
(16) Job payroll ledger.
(17) General ledger, general journal (if used), and all subsidiary ledgers and journals**,** together with all supporting documentation pertinent to entries made in these ledgers and journals.
(18) Cash disbursements journals.
(19) Financial statements for all years reflecting the operations on the Project.
(20) Income tax returns for all years reflecting the operations on the Project.
(21) Depreciation records on all company equipment**,** whether such records are maintained by the company involved, its accountant, or others.

(22) If a source other than depreciation records is used to develop costs for the Contractor's internal purposes in establishing the actual cost of owning and operating equipment, all such other source documents.
(23) All documents which reflect the Contractor's actual profit and overhead during the years that the Project was being performed**,** and for each of the five years prior to the commencement of the Project.
(24) All documents related to the preparation of the Contractor's bid**,** including the final calculations on which the bid was based.
(25) All documents which relate to the claim or to any sub-claim, together with all documents that support the amount of damages as to each claim or sub-claim.
(26) Worksheets used to prepare the claim, which indicate the cost components of each item of the claim, including but not limited to the pertinent costs of labor, benefits and insurance, materials, equipment, and subcontractors' damages, as well as all documents which establish the relevant time periods, individuals involved, and the Project hours and the rates for the individuals.
(27) The name, function, and pertinent activity of each Contractor's or subcontractor's official, or employee involved in or knowledgeable about events that give rise to, or facts that relate to, the claim.
(28) The amount(s) of additional compensation sought and a break-down of the amount(s) into the categories specified as payable under Article 1.11.04 above.
(29) The name, function, and pertinent activity of each Department official, employee or agent involved in or knowledgeable about events that give rise to, or facts that relate to, the claim.

CONNECTICUT
SUPPLEMENTAL SPECIFICATION
SECTION 1.20
GENERAL CLAUSES FOR FACILITIES CONSTRUCTION

1.20-1.00 – General:

Delete the last sentence of the first paragraph and replace with the following:

"Facilities Construction is defined as the type of construction that requires the issuance of a Certificate of Compliance (C.O.C.) by the State Building Inspector or his authorized representative at the completion of a project, and includes site work considered ancillary to this type of construction."

Add the following article:

"**1.20-1.01.01—Definitions:**

OWNER: Where used herein, it is synonymous with Department or State."

1.20-1.02.04 – Examination of Plans, Specifications, Special Provisions and Site of Work:

Delete the first sentence of the first paragraph and replace with the following:

"CSI-formatted specifications are organized into Divisions and Sections based on the CSI's "MasterFormat" numbering system."

1.20-1.02.13 – Knowledge of Applicable Laws:

Delete Items 1 through 9 in their entirety and replace with the following:

1. "The 2003 International Building Code with the State Building Code, including latest Connecticut Supplement and Amendments.
2. The 2003 International Plumbing Code.
3. The 2003 International Mechanical Code.
4. The 2003 International Existing Building Code.
5. The 2009 International Energy Conservation Code.
6. The 2011 NFPA 70 National Electrical Code.
7. The 2003 ICC/ANSI A117.1.
8. The Fire Safety Code, including latest Connecticut Supplement and Amendments.
9. The 2003 International Fire Code.
10. The 2003 NFPA 1 Uniform Fire Code.

11. The 2003 NFPA 101 Life Safety Code."

Add the following as the new last paragraph:

"All work to be performed by the Contractor shall comply with the "Americans with Disabilities Act Accessibility Guidelines.""

1.20-1.03.01 – Consideration of Bids:

Delete the entire article and replace with the following:

"The apparent low bidder shall submit to the Manager of Contracts a Schedule of Values within 14 days after bid opening. Any other Contractor that the Department may subsequently designate as the apparent lowest bidder shall make the aforesaid submission within 14 days from the date on which the Department notifies said Contractor that it has become the apparent lowest bidder. If, however, the Department deems it necessary for such a subsequently designated Contractor to make said submission within a shorter period of time, the Contractor shall make the submission within the time designated by the Department.

The total in the Schedule of Values shall equal the bid dollar amount for the Major Lump Sum Item (MLSI).

The Schedule of Values shall be divided into "Line Items" listed separately for each CSI Section of the Special Provisions. An additional line item for "Mobilization" shall be incorporated into the Schedule of Values; however, this item may not exceed 7.5% of the value of the MLSI. The "Mobilization" line item will also include costs associated with "General Conditions" and "Insurance/Bonding." An additional line item for "Project Closeout" shall be incorporated into the Schedule of Values; however, this item must be at least 2.5% of the value of the MLSI. Where requested by the Department, the Contractor shall break down the line items further into more specific line items.

In the event that this Contract is terminated or a portion of this Contract is deleted for any reason or in any way allowable by law under this Contract after the apparent low bidder has been awarded the Contract, the Schedule of Values will <u>not</u> be used for estimating payment due the Contractor for work completed prior to such termination of the Contract or deletion of work thereunder. In the case of Contract termination, payment shall be made in accordance with Article 1.05.14."

1.20-1.05.02--Shop Drawings, Product Data, Product Samples and Quality Assurance Submittals:

Delete the last sentence of the first paragraph and replace with the following:

"All facsimiles or other electronic documents from the Contractor shall be followed by an

official transmittal."

Delete the third paragraph and replace with the following:

"The Contractor shall number each submittal consecutively: When resubmitting a "Revise and Resubmit" or "Rejected" submittal, the Contractor shall label the transmittal with the original submittal number followed by a letter to designate the additional submission. All submittals shall be numbered conforming to the following examples:"

In column B of line 001, line 001a, and line 001b of the table in subsection 1, replace "07511" with "075110."

Add the following to the end of the first paragraph of subsection 2:

"The Department reserves the right to return partial submittals unreviewed to the Contractor."

Revise the third paragraph of subsection 2 to read:

"The Contractor shall allow at least 60 calendar days for review of any submittal requiring approval by FAA, FTA, any railroad, DEEP, U.S. Coast Guard, Army Corps of Engineers, or any other outside agency."

Delete the third and fourth paragraphs of subsection 3 and replace with the following:

"The Designer will not review submittals and the Engineer will not process payment estimates until the initial submittal schedule has been provided. Any delays in construction due to the Contractor's failure to provide a submittal schedule shall be the responsibility of the Contractor.

The Contractor must update its submittal schedule at least once a month, and distribute and post each updated schedule in the manner described above. The Engineer reserves the right not to process payment estimates without a recently updated submittal schedule on file."

Replace the first sentence of the first paragraph of subsection 4 with the following:

"Shop Drawings consist of fabrication and installation drawings, roughing-in and setting drawings, schedules, patterns, templates and similar drawings, and wiring diagrams showing field-installed wiring, including power, signal, and control wiring."

Replace the second paragraph of subsection 4 with the following:

"Shop drawings shall include the following information: Contract number, Project

description, number and title of the drawing, date of drawing, revision number, name of Contractor and subcontractor submitting drawings, dimensions, identification of products, shop work manufacturing instructions, design calculations, statement of compliance with Contractual standards, notation of dimensions established by field measurement, relationship to adjoining construction clearly indicated, seal and signature of a professional engineer if specified, and any other information required by individual Contract provisions."

Replace the first sentence of the first paragraph of subsection 5 with the following:

"Product data consist of printed information such as manufacturer's product specifications, manufacturer's installation instructions, manufacturer's catalog cuts, standard color charts, wiring diagrams showing factory-installed wiring, printed performance curves, operational range diagrams, and mill reports."

Replace the first sentence of the first paragraph of subsection 7 with the following:

"Quality assurance submittals consist of qualification data, design data, certifications, manufacturer's instructions, manufacturer's field reports, test reports, Material Safety Data Sheets (MSDSs), and other quality assurance information required by individual Contract provisions."

1.20-1.05.04—Coordination of Special Provisions, Plans, Supplemental Specifications and Standard Specifications and Other Contract Requirements:

Delete the first and second paragraphs and replace with the following:

"Industry Standards: Each entity engaged in construction of the Contract shall be familiar with industry standards applicable to that entity's construction activities. If printed standards have been established by organizations referenced in Article 1.01.02 or in the Contract, the Contractor shall obtain copies of said standards directly from the publication source.

Unless the Special Provisions include more stringent requirements, applicable construction industry standards have the same force and effect as if bound or copied directly into the Special Provisions to the extent referenced. Such standards are made a part of the Contract by reference."

Add the following article:

1.20-1.05.08—Schedules and Reports:

Daily Construction Reports: The Contractor shall assist the Engineer in the preparation of a daily construction report, by ensuring that each of the Contractor's

employees and subcontractors working on the Project site on a given day signs the Engineer's sign-in sheet for that day; and by keeping and providing to the Engineer its own daily list of employees and subcontractors who worked on the Project site on that day.

Add the following article:

1.20-1.05.23—Requests for Information (RFIs):

The Contractor shall forward all RFIs to the Engineer in writing (facsimile or other electronic document) for review. The Engineer will forward the RFI to the Designer for review. Upon receipt of an RFI, the Designer will attempt to determine if additional information is required from the Contractor to respond to the RFI, and request said information from the Engineer.

All other RFIs will be responded to within 10 calendar days of receipt by the Designer.

1.20-1.05.24—Project Meetings:

Delete the third paragraph under subsection 1.

Delete the second paragraph under subsection 2 and replace with the following:

"The meeting participants shall review progress of other construction activities and preparations for the particular activity under consideration, including requirements of Contract documents, related requests for interpretations, related construction orders, purchases, deliveries, submittals, review of mockups, possible conflicts, compatibility problems, time schedules, weather limitations, manufacturer's written recommendations, warranty requirements, compatibility of materials, acceptability of substrates, temporary facilities and controls, space and access limitations, regulations of authorities having jurisdiction, testing and inspecting requirements, installation procedures coordination with other work, required performance results, protection of adjacent work, and protection of construction and personnel."

Delete the second, third and fourth paragraph under subsection 3 and replace with the following:

"The Contractor shall provide the Engineer with a detailed agenda for the proposed meeting, specifying what topics will be covered. In addition to representatives of the Engineer, each subcontractor, supplier or other entity concerned with current progress or involved in planning, coordination or performance of future activities shall attend these meetings. All participants at the meeting shall be familiar with the Project and authorized to conclude matters relating to the Project.

At each progress meeting, the participants shall (1) review items of significance that could affect progress; (2) discuss topics appropriate to the current status of the Project;

(3) review progress since the last meeting; (4) determine whether each activity is on time, ahead of schedule, or behind schedule, in relation to the Contractor's Construction Schedule; (5) determine how to expedite any Project work that may be behind schedule; (6) discuss whether or not schedule revisions are required to ensure that current and subsequent activities will be completed within the Contract time; and (7) review the present and future needs of each entity represented at the meeting, including such items as interface requirements, time, sequences, deliveries, off-site fabrication problems, access, site utilization, temporary facilities and controls, hours of work, hazards and risks, housekeeping, quality and work standards, status of correction of deficient items, field observations, requests for interpretations, status of proposal requests, pending changes, status of construction orders, and documentation of information for payment requests. The Engineer will distribute copies of minutes of the meeting to the Designer and the Contractor. The Contractor shall distribute copies to parties who were or should have been at the meeting."

*Delete article **1.20-1.05.25—Schedules and Reports** in its entirety*

1.20-1.06.08—Warranties:

Delete the eighth and ninth paragraph and replace with the following:

"The Contractor shall:

(a) Bind warranties in heavy-duty, commercial-quality, durable 3-ring vinyl-covered loose-leaf binders, thick enough to accommodate the contents, and sized to receive 8 1/2-inch x 11-inch paper (216-millimeter x 279-millimeter) paper.

(b) Identify the binder's contents on the binder's front and spine with the typed or printed title "WARRANTIES," the Project title or name, and the name of the Contractor.

(c) Provide a heavy paper divider with a tab for each separate warranty.

(d) Mark the tab to identify the related product or installation.

(e) Provide a typed description of the product or installation, including the name of the product, and the name, address and telephone number of the Contractor or pertinent subcontractor.

(f) Furnish to the Department a written warranty for all Project work accompanied by a cover letter with the following contents:

[Addressed to:]

Commissioner of Transportation
Department of Transportation
P.O. Box 317546
Newington, Connecticut 06131-7546

Project Title and Number

[We] hereby warrant all materials and workmanship for <u>all</u> work performed under this Contract for a period of one (1) year from [date of issuance of C.O.C.] against failures of

workmanship and materials in accordance with the Contract. Furthermore, as a condition of this warranty, [we] agree to have in place all insurance coverage identified in the Contract for the performance of any warranty work.

[Signature:] [Name of authorized signatory]
[Title]

(g) Submit to the Engineer, upon completion of installation of materials or assemblies that are required to have either a flame-rating or a fire-endurance hourly rating, a detailed letter certifying that the required rating has been attained.

Upon determination by the Engineer that Project work covered by a warranty has failed, the Contractor shall replace or rebuild the work to an acceptable condition complying with Contract requirements. The Contractor is responsible for the cost of replacing or rebuilding defective construction or components and those which may have needed to be damaged or removed in order to cure the defective work including costs of material, equipment, labor, and material disposal, regardless of whether or not the State has benefited from use of the work through a portion of its anticipated useful service life. The Contractor shall respond to the Project Site when Project work covered by a warranty has failed within 3 calendar days, unless in the Engineer's opinion said failure is deemed to be an emergency, in which case the Contractor shall respond to the Project Site as directed by the Engineer."

1.20-1.08.03—Prosecution of Work:

Under subsection '3. Cutting and Patching,' delete the heading 'B. Protection of Structural Elements' and replace with the following:

"**B. Protection:**"

Move the existing first and second paragraphs to under the following subparagraph:

"1. Structural Elements:"

Add the following after the first paragraph under B:

"2. Operational Elements: The Contractor shall not cut and patch operating elements and related components in a manner that results in their reducing their capacity to perform as intended or that results in increased maintenance or decreased operational life or safety.

3. Miscellaneous Elements: The Contractor shall not cut and patch miscellaneous elements or related components in a manner that could change their load-carrying capacity, that results reducing their capacity to perform as intended, or that results in increased maintenance or decreased operational life or safety."

Add the following after subsection 3:

“4. Selective Demolition:

A. Definitions:

Remove: The Contractor shall detach materials from existing construction and legally dispose or recycle them off-site, unless indicated to be removed and salvaged or removed and reinstalled. Except for materials indicated to be reused, salvaged, reinstalled, or otherwise indicated to remain Engineer's property, demolished materials shall become Contractor's property and shall be removed from the Project Site.

Remove and Salvage: The Contractor shall detach materials from existing construction and deliver them to Engineer. The Engineer reserves the right to identify other materials for salvage during the course of demolition.

Remove and Reinstall: The Contractor shall detach materials from existing construction, prepare them for reuse, and reinstall them where indicated.

Existing to Remain: Existing materials of construction that are not to be removed and that are not otherwise indicated to be removed, removed and salvaged, or removed and reinstalled.

B. Approval Process:

The Contractor shall submit pre-demolition photographs to the Engineer prior to the commencement of Project work to show existing conditions of adjoining construction and site improvements, including finish surfaces, that might be misconstrued as damage caused by selective demolition operations.

Well in advance of performing any selective demolition on the Project, the Contractor shall submit to the Engineer a proposal describing the procedures that the Contractor intends to use for same.

The Contractor shall include the following information, as applicable, in its proposal: (1) detailed sequence of selective demolition and removal work with starting and ending dates for each activity while ensuring that the Engineer's on-site operations are not disrupted; (2) interruption of utility services; (3) coordination for shutoff, capping, and continuation of utility services; (4) use of elevators and stairs; (5) locations of temporary partitions and means of egress; (6) coordination of Engineer's continuing occupancy of portions of existing building and of Engineer's partial occupancy of completed Project work; and (7) means of protection for items to remain and items in path of waste removal from building.

The Contractor shall comply with (1) governing EPA notification regulations before beginning selective demolition; (2) hauling and disposal regulations of authorities having jurisdiction; (3) ANSI A10.6; and (4) NFPA 241.

The Engineer will conduct a Pre-Demolition Meeting at the Project site in accordance with Article 1.20-1.05.24. Said meeting will review the methods and procedures related to selective demolition including, but not limited to, the following: (1) an inspection and discussion of the condition of construction to be selectively demolished; (2) a review of the structural load limitations of the existing structure; (3) a review and finalization of the selective demolition schedule and a verification of the availability of materials, demolition personnel, equipment, and facilities needed to make progress and avoid delays; (4) a review of requirements of Project work performed by other trades that rely on substrates exposed by selective demolition operations; and (5) a review of areas where existing construction is to remain and requires protection.

C. Repair Materials:

The Contractor shall comply with Article 1.20-1.08.03 subsection 3E for repair materials and shall comply with material and installation requirements specified in other Contract provisions.

D. Examination:

The Contractor shall (1) verify that utilities have been disconnected and capped; (2) survey existing conditions and correlate with requirements indicated to determine extent of selective demolition required; (3) inventory and record the condition of items to be removed and reinstalled and items to be removed and salvaged; (4) investigate and measure the nature and extent of unanticipated mechanical, electrical, or structural elements that conflict with intended function or design and submit a written report to Engineer; and (5) perform surveys as the Project work progresses to detect hazards resulting from selective demolition activities.

E. Utility Services:

The Contractor shall (1) maintain existing utility services indicated to remain and protect them against damage during selective demolition operations; (2) not interrupt existing utilities serving occupied or operating facilities unless authorized in writing by the Engineer; (3) provide temporary services during interruptions to existing utilities, as acceptable to Engineer; (4) provide at least 3 calendar days' notice to the Engineer if shutdown of service is required during changeover; and (5) locate, identify, disconnect, and seal or cap off indicated utilities serving areas to be selectively demolished. The Contractor shall arrange to shut off indicated utilities with utility companies. If utility services are required to be removed, relocated, or abandoned, before proceeding with selective demolition the Contractor shall provide temporary utilities that bypass area of selective demolition and that maintain continuity of service to other parts of building.

The Contractor shall cut off pipe or conduit in walls or partitions to be removed and shall cap, valve, or plug and seal remaining portion of pipe or conduit after bypassing.

The Contractor shall refer to other Contract provisions for shutting off, disconnecting, removing, and sealing or capping utilities. The Contractor shall not start selective demolition work until utility disconnecting and sealing have been completed and verified by the Engineer in writing.

F. Preparation:

The Contractor shall conduct selective demolition and debris-removal operations to ensure minimum interference with adjacent occupied and used facilities on the Project site. The Contractor shall not disrupt the Owner's operations without the Engineer's permission. The Contractor shall protect existing site improvements, appurtenances, and landscaping to remain.

The Contractor shall provide temporary barricades and other protection required to prevent injury to people and damage to adjacent buildings and facilities to remain. The Contractor shall provide temporary weather protection, during interval between selective demolition of existing construction on exterior surfaces and new construction, to prevent water leakage and damage to structure and interior areas. The Contractor shall protect walls, ceilings, floors, and other existing finish work that are to remain or that are exposed during selective demolition operations. The Contractor shall cover and protect furniture, furnishings, and equipment that have not been removed.

The Contractor shall provide temporary enclosures for protection of existing building and construction, in progress and completed, from exposure, foul weather, other construction operations, and similar activities. The Contractor shall provide temporary weathertight enclosure for building exterior. Where heating is needed and permanent enclosure is not complete, the Contractor shall provide insulated temporary enclosures and shall coordinate enclosure with ventilating and material drying or curing requirements to avoid dangerous conditions and effects.

The Contractor shall erect and maintain dustproof partitions and temporary enclosures to limit dust and dirt migration and to separate areas from fumes and noise.

The Contractor shall provide and maintain interior and exterior shoring, bracing, or structural support to preserve stability and prevent movement, settlement, or collapse of construction to remain, and to prevent unexpected or uncontrolled movement or collapse of construction being demolished. The Contractor shall strengthen or add new supports when required during progress of selective demolition.

G. Pollution Controls:

The Contractor shall comply with governing regulations pertaining to environmental protection.

The Contractor shall not use water when it may create a hazardous or objectionable condition such as ice, flooding, or pollution.

The Contractor shall remove and transport debris in a manner that will prevent spillage on adjacent surfaces and areas. The Contractor shall remove debris from elevated portions of building by chute, hoist, or other device that will convey debris to grade level in a controlled descent.

The Contractor shall clean adjacent structures and improvements of dust, dirt, and debris caused by selective demolition operations. The Contractor shall return adjacent areas to condition existing before selective demolition operations began.

H. Performance:

The Contractor shall not use explosives for demolition purposes.

The Contractor shall demolish and remove existing construction only to the extent required by new construction and as indicated. The Contractor shall (1) proceed with selective demolition systematically; (2) neatly cut openings and holes plumb, square, and true to dimensions required; (3) use cutting methods least likely to damage remaining or adjoining construction; (4) use hand tools or small power tools designed for sawing or grinding, not hammering and chopping, to minimize disturbance of adjacent surfaces; (5) temporarily cover openings to remain; (6) cut or drill from the exposed or finished side into concealed surfaces to avoid marring existing finished surfaces; (7) not use cutting torches until work area is cleared of flammable materials; (8) verify condition and contents of concealed spaces such as duct and pipe interiors before starting flame-cutting operations; (9) maintain fire watch and portable fire-suppression devices during flame-cutting operations; (10) maintain adequate ventilation when using cutting torches; (11) remove decayed, vermin-infested, or otherwise dangerous or unsuitable materials and promptly dispose of off-site; (12) remove structural framing members and lower to ground by method suitable to avoid free fall and to prevent ground impact or dust generation; (13) locate selective demolition equipment and remove debris and materials so as not to impose excessive loads on supporting walls, floors, or framing; and (14) dispose of demolished items and materials promptly.

The Contractor shall comply with the Engineer's requirements for using and protecting walkways, building entries, and other building facilities during selective demolition operations.

The Contractor shall demolish and remove foundations and other below-grade structures completely unless otherwise indicated on the plans. The Contractor shall fill below-grade areas and voids resulting from demolition of structures with granular fill materials. Prior to placement of fill materials, the Contractor shall ensure that the areas

to be filled are free of standing water, frost, frozen material, trash, and debris. After fill placement and compaction, grade surface to meet adjacent contours and provide flow to surface drainage structures. Backfilling and grading related to demolition is included in the Major Lump Sum Item (MLSI) for the Project. There will be no separate payment for this backfilling and grading.

The Contractor shall (1) demolish concrete in sections; (2) cut concrete at junctures with construction to remain to the depth shown on the Contract plans and at regular intervals using power-driven saw; and (3) remove concrete between saw cuts.

The Contractor shall (1) demolish masonry in small sections; (2) cut masonry at junctures with construction to remain using power-driven saw; and (3) remove masonry between saw cuts.

The Contractor shall (1) saw-cut perimeter of concrete slabs-on-grade to be demolished as shown on the Contract plans; and (2) break up and remove concrete slabs-on-grade.

The Contractor shall (1) remove floor coverings and adhesive according to recommendations in RFCI-WP and its Addendum; and (2) remove residual adhesive and prepare substrate for new floor coverings by one of the methods recommended by RFCI.

The Contractor shall (1) only remove existing roofing in one day to the extent that it can be covered by new roofing; and (2) refer to other Contract provisions for new roofing requirements.

The Contractor shall remove air conditioning equipment without releasing refrigerants.

I. Reuse of Building Elements:

The Contractor shall not demolish building elements beyond what is indicated on the plans without the Engineer's approval.

J. Removed and Salvaged Materials:

Unless otherwise directed by the Engineer, the Contractor shall (1) store materials in a secure area until delivery to the owner; (2) transport materials to the owner's storage area off-site; and (3) protect materials from damage during transport and storage.

K. Removed and Reinstalled Materials:

Unless otherwise directed by the Engineer, the Contractor shall (1) clean and repair materials to functional condition adequate for intended reuse; (2) paint equipment to match the color of new equipment; (3) protect materials from damage during transport and storage; and (4) reinstall items in locations indicated complying with installation

requirements for new materials and equipment and providing connections, supports, and miscellaneous materials necessary to make item functional for use indicated.

L. Existing Materials to Remain:

The Contractor shall protect construction indicated to remain against damage and soiling during selective demolition.

The Contractor shall drain piping and cap or plug piping with the same or a compatible piping material for piping to be abandoned in place.

The Contractor shall cap or plug ducts with the same or a compatible ductwork material for ducts to be abandoned in place.

The Contractor shall cut and remove concealed conduits and wiring to be abandoned in place 2-inches (50-mm) below the surface of the adjacent construction, cap the conduit end, and patch the surface to match the existing finish. The Contractor shall cut existing conduits installed in concrete slabs to be abandoned in place flush with the top of the slab and fill conduit end with a minimum of 4-inches (100-mm) of concrete.

M. Patching and Repairing:

The Contractor shall comply with Article 1.20-1.08.03 subsection 3H for patching and repairing damage to adjacent construction caused by selective demolition operations.

N. Disposal of Demolished Materials:

The Contractor shall (1) not allow demolished materials to accumulate or be sold on the Project Site; (2) not burn demolished materials on the Project Site; and (3) promptly and legally dispose or recycle demolished materials off the Project Site."

1.20-1.08.05—Personnel and Equipment:

Replace "FM with "FMG" in subsection (a)

Add the following article:

"**1.20-1.08.12—Semi-Final and Final Inspections:**

1. Semi-Final Inspection: Before requesting the Semi-Final Inspection, the Contractor shall show 100% completion for all Project work claimed as complete. The Contractor shall submit final test/adjust/balance records including the final air and water balance report. For all incomplete Project work, the Contractor shall prepare its own "Punch List" of the incomplete items and reasons the work is not complete. The Contractor shall submit final test/adjust/balance records including the final air and water balance report.

On receipt of a Contractor request for inspection, the Engineer will proceed with inspection or notify the Contractor of unfulfilled requirements. The Engineer will prepare a “Punch List” of unfilled, substandard, or incomplete items. During this inspection, the Contractor shall have all technicians necessary to demonstrate the complete operation of all systems on-site. Examples of such systems include, but are not limited to, the following: boiler, HVAC, fire alarm, and building automation. The Engineer will advise the Contractor of the construction that must be completed or corrected before the issuance of the C.O.C. Results of the completed inspection will form the basis of requirements for the Final Inspection. The Engineer reserves the right to issue the C.O.C. after the Semi-Final Inspection if there are no Building Code or Fire Code compliance issues or any major “Punch List” items.

2. Final Inspection: Before requesting Final Inspection for issuance of the C.O.C., the Contractor shall: (1) submit specific warranties, maintenance service agreements, final certifications and similar documents; (2) submit Record Drawings, Record Specifications, operations and maintenance manuals, final project photographs, property surveys, and similar final record information; (3) deliver spare parts; (4) make final changeover of permanent locks and deliver the keys to the Engineer; (5) complete start-up testing of systems; (6) train the owner's operation and maintenance personnel; (7) discontinue or change over and remove temporary facilities from the Project Site, along with construction tools, mock-ups, and similar elements; (8) complete final cleaning requirements, including touch-up painting; (9) touch-up and otherwise repair and restore marred exposed finishes to eliminate visual defects; (10) submit a certified copy of the Engineer's “Punch List” of items to be completed or corrected, stating that each item has been completed or otherwise resolved for acceptance, and the list has been endorsed and dated by the Engineer; (11) submit final meter readings for utilities, a measured record of stored fuel, and similar data as of the date of Final Inspection, or when the Engineer took possession of and responsibility for corresponding elements of the Project work; and (12) install permanent electrical service. The Contractor shall install permanent electrical service prior to Semi-Final Inspection if requested by the Engineer, or if necessary for the Engineer or Contractor to perform testing of building and other related systems and equipment to certify acceptance and completion of Project work. The Contractor shall submit all outstanding items or unacceptable submissions from the Semi-Final Inspection, or other outstanding items required for submittal, prior to the Final Inspection.

On receipt of a Contractor request for inspection, the Engineer will proceed with inspection and notify the Contractor of unfulfilled requirements.”

1.20-1.08.13—Termination of the Contractor’s Responsibility:

Add subsection 3 as follows:

“**3. Insurance Coverage:** The Contractor shall have in place all insurance coverage identified in Article 1.03.07 for the performance of any warranty work.”

1.20-1.08.14—Acceptance of Project:

Add the following to subsection 2 under the heading "Equipment and Systems Maintenance Manual:"

"(j) Copies of maintenance agreements with service agent name and telephone number."

Add the following paragraph in subsection 3 after the second paragraph:

"The Contractor shall provide a syllabus prior to the training to ensure that the appropriate owner's operation and maintenance personnel are in attendance."

Delete the last paragraph and replace with the following:

" The Contractor shall submit to the Engineer for approval, a qualified commercial videographer to videotape the training sessions. The videographer shall be a firm or an individual of established reputation that has been regularly engaged as a professional videographer for not less than 3 years.

The Contractor shall video record each training session and provide said video in DVD format to the Engineer for the owner's future use."

Add the following section:

"1.20-1.09.06—Partial Payments:

With each payment request under the MLSI, the Contractor shall submit AIA Form G702 (Application and Certificate of Payment) and Form G703 (Continuation Sheet). The Contractor is not required to obtain the Architect's signature on Form G702. Once approved by the Engineer, the Forms G702 and G703 become the basis of payment under the MLSI."

Add the following section:

"1.20-9.75.04—Method of Measurement:

Mobilization as defined in Article 1.20-1.03.01 will be paid in the manner described hereinafter; however, the determination of the total contract price earned shall not include the amount of mobilization earned during the period covered by the current monthly estimate – but shall include amounts previously earned and certified for payment:

1. When the first payment estimate is made, 25 percent of the "Mobilization" line item will be certified for payment.

2. When the Baseline Schedule, as specified under Section 1.05.08, is accepted, 50 percent of the “Mobilization” line item, minus any previous payments, will be certified for payment.

3. When 10 percent of the total original contract price is earned and the Baseline Schedule, as specified under Section 1.05.08, is accepted, 75 percent of the “Mobilization” line item, minus any previous payments, will be certified for payment.

4. When 30 percent of the total original contract price is earned and the Baseline Schedule, as specified under Section 1.05.08, is accepted, 100 percent of the “Mobilization” line item, minus any previous payments, will be certified for payment.

Project Closeout as defined in Article 1.20-1.03.01 shall include demobilization of plant and equipment, completion of all physical work, and administrative closeout items necessary to satisfy all Contract requirements. Project Closeout will be paid in the manner described hereinafter:

1. When the non-administrative project completion requirements (as specified under Article 1.08.13) and the administrative completion requirements (as specified under Article 1.08.14) have been satisfied, 100 percent of the “Project Closeout” line item will be certified for payment.”

CONNECTICUT
SUPPLEMENTAL SPECIFICATION
SECTION 2.02
ROADWAY EXCAVATION, FORMATION OF EMBANKMENT AND DISPOSAL OF SURPLUS MATERIAL

2.02.01 – Description:

In the first sentence, insert “, swales” *between* “channels” *and* “and other miscellaneous construction to the ...”

2.02.04 – Method of Measurement:

In the second to last Paragraph, replace the last sentence with the following:

“Bituminous parking areas are considered as bituminous concrete pavement.”

CONNECTICUT
SUPPLEMENTAL SPECIFICATION
SECTION 2.05
TRENCH EXCAVATION

2.05.01—Description:

In Paragraph 2, delete the only sentence and replace with the following:

"2) The removal of stormwater drainage structures, stormwater pipes and appurtenances beyond the limits of the roadway and structure excavation."

In Subarticle 2, Rock in Trench, delete the only sentence and replace with the following:

"(2) Rock, insofar as it applies to trench excavation, shall be defined as rock in definite ledge formation, boulders, or portions of boulders, cement masonry structures, concrete structures, reinforced concrete pipe, Portland cement concrete pavement or base, of 1/2 cubic yard (0.5 cubic meters) or more in volume, removed as indicated or directed from within the payment lines for trench excavation."

2.05.04—Method of Measurement:

In the first sentence under **Horizontal Payment Limits** *insert* "culvert ends," *between* "pipe culverts," *and* "pipe arches,"

2.05.05—Basis of Payment:

*In Paragraph 13 - Delete the entire sentence "*There will be no direct payment for the plugging of existing pipes...*" and replace it with the following:*

"There will be no direct Payment for the plugging of existing pipes, removal and disposal of metal or plastic pipes or for the breaking up of floors in drainage structures being abandoned. The cost shall be included in the contract unit prices of the drainage and excavation items."

CONNECTICUT
SUPPLEMENTAL SPECIFICATION
SECTION 2.12
SUBBASE

2.12.02 – Materials:

Delete the second sentence: "Grading 'B' shall be used."

CONNECTICUT
SUPPLEMENTAL SPECIFICATION
SECTION 2.16
PERVIOUS STRUCTURE BACKFILL

2.16.01 - Description:

Add the following sentence after the only sentence:

"This item shall also consist of furnishing and placing crushed stone or gravel in permeable material bags at the inlet ends of weep holes in structures to the dimensions indicated on the plans or as ordered by the Engineer."

2.16.02 – Materials:

Add the following paragraph after the only sentence:

" The materials for bagged stone shall conform to the following requirements:

1. The crushed stone or gravel shall conform to the grading requirements of Article M.01.01 for No. 3 or No. 4 coarse aggregate or a mixture of both.
2. The bag shall be of permeable material sized to contain 1 c.f. (0.03 cu.m) of loosely packed granular material."

2.16.03 - Construction Methods:

Add the following paragraph at the end of the section:

" Where weep holes are installed, bagged stone shall be placed around the inlet end of each weep hole, to prevent movement of the pervious material into the weep hole. Approximately 1 c.f. (0.03 cu.m) of crushed stone or gravel shall be enclosed in each of the permeable material bags. All bags shall then be securely tied at the neck with cord or wire so that the enclosed material is contained loosely. The filled bags shall be stacked at the weep holes to the dimensions shown on the plans or as directed by the Engineer. The bags shall be unbroken at the time pervious material is placed around them, and bags which are broken or burst prior to or during the placing of the pervious material shall be replaced at the Contractor's expense."

2.16.04 - Method of Measurement:

Add the following paragraph after the only paragraph:

" There will be no direct payment for bagged stone, but the cost thereof shall be included in the cost of the work for "Pervious Structure Backfill.""

CONNECTICUT
SUPPLEMENTAL SPECIFICATION
SECTION 3.04
PROCESSED AGGREGATE BASE

Delete the entire Section and replace with the following:

" 3.04.01 - Description: The base shall consist of a foundation constructed on the prepared subbase or subgrade in accordance with these specifications and in conformity with the lines, grades, compacted thickness and typical cross-section as shown on the plans.

3.04.02 - Materials: All materials for this work shall conform to the requirements of Article M.05.01.

3.04.03 - Construction Methods: Only one type of coarse aggregate shall be used on a Project unless otherwise permitted by the Engineer.

Prior to placing the processed aggregate base, the prepared subbase or subgrade shall be maintained true to line and grade, for a minimum distance of 200 ft (60 m) in advance of the work. None of the aggregate courses shall be placed more than 500 ft (150 m) ahead of the compaction and binding operation on that particular course.

The processed aggregate base shall be spread uniformly by a method approved by the Engineer. The thickness of each course shall not be more than 4 inches (100 millimeters) after compaction, unless otherwise ordered.

After the aggregate is spread, it shall be thoroughly compacted and bound by use of equipment specifically manufactured for that purpose. Rollers shall deliver a ground pressure of not less than 300 lbs/in (52.5 N/mm) of contact width and shall have a weight (mass) not less than 10 t (9100 kg). Vibratory units shall have a static weight (mass) of not less than 4 t (3650 kg). Water may be used during the compaction and binding operation and shall be applied from an approved watering device. The compacting and binding operation shall begin at the outside edges, overlapping the shoulders for a distance of not less than 6 in (150 mm) and progress towards the middle, parallel with the centerline of the pavement. The work shall cover the entire surface of the course with uniform overlapping of each preceding track or pass. Areas of super-elevation and special cross slope shall be compacted by beginning at the lowest edge and proceeding towards the higher edge, unless otherwise directed by the Engineer. The compacting and binding operation shall be continued until the voids in the aggregates have been reduced to provide a firm and uniform surface satisfactory to the Engineer. The amount of compactive effort shall in no case shall be less than four (4) complete passes of the compacting and binding operations. All aggregate shall be completely compacted and bound at the end of each day's work or when traffic is to be permitted to operate on the road. The dry density of each layer of processed aggregate base after compaction shall not be less than ninety-five percent (95%) of the dry density

for that material when tested in accordance with AASHTO T180, Method D.

Should the subbase or subgrade material become churned up or mixed with the processed aggregate base at any time, the Contractor shall, without additional compensation remove the mixture. The Contractor shall add new subbase material, if required, and reshape and recompact the subbase in accordance with the requirements of Article 2.12.03. New aggregate material shall be added, compacted and bound, as hereinbefore specified, to match the surrounding surface.

Any surface irregularities which develop during, or after work on each course, shall be corrected by loosening material already in place and removing or adding aggregate as required. The entire area, including the surrounding surface, shall be re-compacted and rebound until it is brought to a firm and uniform surface satisfactory to the Engineer.

3.04.04 - Method of Measurement: Processed Aggregate Base will be measured horizontally in–place after final grading and compaction. Materials placed beyond the horizontal limits indicated on the plans will not be measured for payment.

The total thickness shall be as indicated on the plans, or as ordered by the Engineer and within a tolerance of minus three-fourths of an inch (-$^{3}/_{4}$") to plus one-half inch (+ $^{1}/_{2}$") (-19 mm to +13 mm).

Measurements to determine the thickness will be taken by the Engineer at intervals of 500 ft (150 m) or less, along lanes, and shall be considered representative of the lane. For the purpose of these measurements, a shoulder will be considered a lane.

If a thickness measurement is taken and found deficient, additional measurements considered necessary by the Engineer will be taken to determine the longitudinal limits of the deficiency. Areas not within allowable tolerances shall be corrected, as ordered by the Engineer, without additional compensation to the Contractor.

3.04.05 - Basis of Payment: This work will be paid for at the Contract unit price per cubic yard (cubic meter) for "Processed Aggregate Base," complete in place, which price shall include all materials, tools, equipment and work incidental thereto.

Pay Item	Pay Unit
Processed Aggregate Base	c.y. (cu.m)"

CONNECTICUT
SUPPLEMENTAL SPECIFICATION
SECTION 4.01
CONCRETE FOR PAVEMENT

Article 4.01.03—Construction Methods:

Replace Subarticle A. "Composition" with the following:

" **A. Material Documentation, Transportation and Testing:** All material delivered to the Project shall be documented, transported and testing in accordance with Subarticle 6.01.03-3 Transportation and Delivery of Concrete and Subarticle 6.01.03-4 Acceptance Testing and Test Specimens. The plastic properties for concrete pavement shall conform to the standard mix properties as indicated in Subarticle 6.01.03-4a.
In addition, the air content of the plastic concrete shall be determined in accordance with AASHTO Method T152, Pressure Method. No alternative method is acceptable."

Delete Subarticles B, C, D and E.

Change Subarticle F "Placing Concrete" to be Subarticle B and as follows:

Article 4.01.03-B. Placing Concrete:

3. Placement:

In the last sentence of the first paragraph, change "... tested in accordance with 4.01.03-I ..." *to read* "... tested in accordance with Subarticle 4.01.03-D ..."

6. Joints:
(e) Load Transfer Devices:

Change the only sentence as follows:

"Load transfer devices shall conform to the requirements of Article M.03.08."

7. Curing:

(a) Liquid Membrane-Forming Cure:

Change the first sentence as follows:

"The liquid curing compound shall conform to Subarticle M.03.04-3."

(b) Moist Curing:

Change the end of the first sentence as follows:

"... moist mats of the size and quality specified in Subarticle M.03.04-2."

(c) Cover Sheet Curing:

Change the end of the first sentence as follows:

"... paper or polyethylene cover sheets conforming to Subarticle M.03.04-4."

Change Subarticle G "Protection of Pavement" to be Subarticle C.

Change Subarticle H "Riding Surface Tests" to be Subarticle D.

Change Subarticle I "Flexural Testing of Concrete" to be Subarticle E.

Change Subarticle J "Opening to Traffic" to be Subarticle F.

CONNECTICUT
SUPPLEMENTAL SPECIFICATION
SECTION 5.08
SHEAR CONNECTORS

5.08.02 – Materials:

Replace the only paragraph with the following:

“ Stud shear connectors shall conform to the requirements of Subarticle M.06.02-4 Welded Stud Shear Connectors.”

5.08.03 – Construction Methods:

Replace the last sentence of the third paragraph with the following:

“ Stud shear connectors may be stacked to meet heights greater than the 8 in (200 mm) maximum for individual studs.”

Replace the last sentence of the fifth paragraph with the following:

“ Studs exhibiting no signs of failure after bending shall be left in the bent position, if allowed by the Engineer.”

5.08.04 – Method of Measurement:

Delete the entire article and replace with the following:

“ Installed and accepted shear connectors will be measured as units.
For stacked studs, the Department will measure for payment any stack higher than 8 in (200 mm) as two (2) studs.”

5.08.05—Basis of Payment:

Delete the entire article and replace with the following:

“ This work will be paid for at the Contract unit price each for “Shear Connectors,” which price shall include all materials, tools, equipment and labor incidental thereto for all work under this item on the Project.

Pay Item	Pay Unit
Shear Connectors	ea. (ea.)”

CONNECTICUT
SUPPLEMENTAL SPECIFICATION
SECTION 5.14
PRESTRESSED CONCRETE MEMBERS

5.14.03 – Construction Methods:

2. Prestressing:

Change the outline level of "**Final Stressing of Straight Strands:**" *and* "**Final Stressing of Draped Strands:**" *and their subsections as follows:*

" **A. Final Stressing of Straight Strands:**
(1) Single-strand tensioning:
(2) Multiple-strand tensioning:
B. Final Stressing of Draped Strands:
(1) Partial stressing and subsequent strains:
(2) Final stressing in draped position:"

5. Finishing: Deck Units:

Change the first sentence as follows:

"Deck units in structures that will have a bituminous concrete wearing surface shall be given a float finish on the top surface as specified in Subarticle 6.01.03-10."

9. Joining Deck Units:

Change the end of the last sentence of the first paragraph as follows:

"... shall be filled with non-shrink grout conforming to the requirements of Article M.03.05."

12. Inspection:

Change the beginning of the first sentence as follows:

"The provisions of Subarticle 6.03.03-3 (Shop Fabrication), (a) Notification shall apply to the steel items, ..."

16: Methods and Equipment:

Change the last sentence as follows:

"The results of this investigation, including computations, shall be submitted to the Engineer."

CONNECTICUT
SUPPLEMENTAL SPECIFICATION
SECTION 6.01
CONCRETE FOR STRUCTURES

Delete the entire Section and replace it with the following:

SECTION 6.01
CONCRETE FOR STRUCTURES

6.01.01—Description
6.01.02—Materials
6.01.03—Construction Methods
6.01.04—Method of Measurement
6.01.05—Basis of Payment

6.01.01—Description: This item shall include concrete for use in bridges and culverts, walls, catch basins, drop inlets and other incidental construction as required. The concrete shall be composed of Portland cement, pozzolans, fine and coarse aggregate, admixtures and water, prepared and constructed in accordance with these specifications, at the locations and of the form dimensions and class shown on the plans, or as directed by the Engineer.

The use of concrete from dry batch or central mixed plants is permitted for all concrete mixtures.

6.01.02—Materials: The materials for this work shall conform to the requirements of Section M.03.

6.01.03—Construction Methods:

1. Falsework and Forms: Falsework is considered to be any temporary structure which supports structural elements of concrete, steel, masonry or other material during the construction or erection. Forms are considered to be the enclosures or panels which contain the fluid concrete and withstand the forces due to its placement and consolidation. Forms may in turn be supported on falsework.

This work shall consist of the construction and removal of falsework and forms that are designed by the Contractor in the execution of the work, and whose failure to perform properly could adversely affect the character of the Contract work or endanger the safety of adjacent facilities, property, or the public. Falsework and forms shall be mortar tight and of sufficient rigidity and strength to safely support all loads imposed and to produce in the finished structure the lines and grades indicated in the Contract documents. Forms shall also impart the required surface texture and rustication and shall not detract from the uniformity of color of the formed surfaces. Forms shall be of wood, steel or other material approved by the Engineer.

(a) Design: The design of falsework and formwork shall conform to the *AASHTO Guide Design Specifications for Bridge Temporary Works,* or to other established and generally accepted design codes such as ACI Standard *ACI 347 Recommended Practice for Concrete Formwork* or specific form or falsework manufacturer specifications. When other than new or undamaged materials are used, appropriate reductions in allowable stresses, and decreases in resistance factors or imposed loads shall be used for design.

(b) Loads: The design of the falsework and forms shall be based on load factors specified in the *AASHTO LRFD Bridge Design Specifications* and all applicable load combinations shall be investigated. The design load for falsework shall consist of the sum of appropriate dead and live vertical loads and any horizontal loads.

As a minimum, dead loads shall include the weight (mass) of the falsework and all construction material to be supported. The combined unit weight (density) of concrete, reinforcing and pre-stressing steel and forms that is supported shall be assumed to be not less than:

1. Normal-weight (normal-density) concrete: 0.16 kip/ft3 (2560 kg/m3)
2. Lightweight (low-density) concrete: 0.13 kip/ft3 (2080 kg/m3)

Live loads shall consist of the actual weight (mass) of any equipment to be supported, applied as concentrated loads at the points of contact and a uniform load of not less than 0.02 kip/ft^2 (0.001 MPa) applied over the area supported, plus 0.075 kip/ft (1.10 N/mm) applied at the outside edge of deck overhangs.

The horizontal load used for the design of the falsework bracing system shall be the sum of the horizontal loads due to equipment; construction sequence including unbalanced hydrostatic forces from fluid concrete and traffic control devices; stream flow, when applicable; and an allowance for wind. However, in no case shall the horizontal load to be resisted in any direction be less than two percent (2%) of the total dead load.

For post-tensioned structures, the falsework shall also be designed to support any increase in or redistribution of loads caused by tensioning of the structure. Loads imposed by falsework onto existing, new, or partially completed structures shall not exceed those permitted in 6.01.03-12, “Application of Loads.”

(c) Working Drawings: The working drawings for falsework and formwork shall be prepared in accordance with Article 1.05.02 whenever the falsework or formwork exceeds 14.0 feet (4300 mm) in height or whenever vehicular, marine, or pedestrian traffic may travel under or adjacent to the falsework or formwork. Working drawings shall include the sequence, method and rate of placement of the concrete.

Manufacturer catalog cuts or written installation procedures shall be provided for any clips, braces, hangers or other manufactured parts used with the formwork or falsework.

(d) Construction: Forms and falsework shall be built true to lines and grades, shall be strong, stable, firm, mortar-tight and adequately braced or tied, or both. They shall be designed and constructed to withstand all loads and pressures including those imposed by plastic concrete, taking full account of the stresses due to the rate of placement, effect of vibration and conditions brought about by construction methods. Forms and falsework shall be constructed to compensate for variations in camber of supporting members and allow for deflections.

Falsework and formwork shall be chamfered at all sharp corners, unless otherwise ordered or permitted, and shall be given a slight bevel or draft in the case of projections to ensure satisfactory removal. Materials for falsework and formwork and their supports, ties and bracing, shall be of the type, quality and strength to achieve the structural requirements. Form material in contact with concrete shall provide the finished concrete surface smoothness as specified in 6.01.03-10, "Finishing Concrete Surfaces," and have a uniform appearance.

Falsework and formwork shall be treated with form oil or other release agent approved by the Engineer before the reinforcing steel is placed, or self-releasing forms approved by the Engineer may be used. Release agents which will adhere to or discolor the concrete shall not be used.

Falsework and formwork for concrete surfaces exposed to view shall produce a smooth surface of uniform texture, free of voids, indentations, protrusions and bulges. Panels lining falsework and formwork shall be arranged so that the joint lines form a symmetrical pattern conforming to the general lines of the structure. The same type of form-lining material shall be used throughout each element of a structure. Falsework and formwork shall be sufficiently rigid so that the undulation of the concrete surface shall not exceed 1/4 inch (6 mm) when checked with a 4 foot (1200 mm) straightedge or template.

For non-exposed surfaces the falsework and formwork shall be sufficiently rigid so that the undulation of the concrete surface shall not exceed 1/2 inch (13 mm) when checked with a 4 foot (1200 mm) straightedge or template.

Metal ties and anchors to hold the falsework and formwork in alignment and location shall be so constructed that the metal work can be removed to a depth of at least 2 inches (50 mm) from the concrete surface without damage to the concrete. All cavities resulting from the removal of metal ties shall be filled after removal of forms with cement mortar of the same proportions used in the body of the work or other materials approved by the Engineer, and the surface finished smooth and even, and if exposed in the finished work, shall conform to the texture and color of adjacent surfaces. With permission of the Engineer, the Contractor need not remove from the underneath side of bridge decks portions of metal devices used to support reinforcing steel providing such devices are of material, or are adequately coated with material, that will not rust or corrode. When coated reinforcing steel is required, all metal ties, anchorages, or spreaders that remain in the concrete shall be of corrosion-resistant material or coated with a dielectric material.

Forms shall be clean and clear of all debris. For narrow walls and columns where the bottom of the form is inaccessible, an access opening will be allowed in the form and falsework for cleaning out extraneous material.

(e) Date of Completion: The year in which the superstructure is completed in its entirety shall be cast in at least two (2) places as shown on the plans unless otherwise ordered by the Engineer. The date shall be placed in diagonally opposite ends of the bridge parapets or as designated by the Engineer. The reverse molds for the date shall be furnished by the Contractor.

(f) Bridge Decks: After erection of beams and prior to placing falsework and forms, the Contractor shall take elevations along the top of the beam at the points shown on the plans or as directed by the Engineer. The Contractor shall calculate the haunch depths and provide them to the Engineer a minimum of seven (7) days prior to installing the falsework and forms. The Contractor shall also provide calculations for the setting of the overhang brackets based on the final beam deflection. These calculations shall be based on the final proposed deck grade and parapet elevations.

Falsework or formwork for deck forms on girder bridges shall be supported directly on the girders so that there will be no appreciable differential settlement during placing of the concrete. Girders shall be either braced and tied to resist any forces that would cause rotation or torsion in the girders caused by the placing of concrete for diaphragms or decks, or shown to be adequate for those effects. Unless specifically permitted, welding of falsework support brackets or braces to structural steel members or reinforcing steel shall not be allowed.

(g) Stay-In-Place Metal Forms for Bridge Decks: These forms may be used if shown in the Contract or approved by the Engineer. Prior to the use of such forms and before fabricating any material, the Contractor shall submit working drawings to the Engineer for review in accordance with Article 1.05.02, Working Drawings. These drawings shall include the proposed method of form construction, erection plans including placement plans, attachment details, weld procedure(s), material lists, material designation, gage of all materials, and the details of corrugation. Also, copies of the form design computations shall be submitted with the working drawings. Any changes necessary to accommodate stay-in-place forms, if approved, shall be at no cost to the Department.

The metal forms shall be designed on the basis of the dead load of the form, reinforcement and the plastic concrete, including the additional weight (mass) of concrete [considered to be equivalent to the weight (mass) imposed by an additional concrete thickness equal to three percent (3%) of the proposed deck thickness, but not to exceed 0.3 inches (8 mm)] due to the deflection of the metal forms, plus 50 pounds per square foot (2.40 kilopascals) for construction loads. The allowable stress in the corrugated form and the accessories shall not be greater than 0.725 times the yield strength of the furnished material and the allowable stress shall not exceed 36,000 psi (250 megapascals). The span for design and deflection shall be the clear distance between edges of the beams or girders less 2 inches (50 mm) and shall be measured parallel to the form flutes. The maximum deflection under the weight (mass) of plastic concrete, reinforcement, and forms shall not exceed 1/180 of the form span or 0.5 inches (13 mm), whichever is less. In no case shall the loading

used to estimate this deflection be less than 120 pounds per square foot (586 kilograms per square meter). The permissible form camber shall be based on the actual dead load condition. Camber shall not be used to compensate for deflection in excess of the foregoing limits. The form support angles shall be designed as a cantilever with horizontal leg not more than 3 inches (75 mm).

No stay-in-place metal forms shall be placed over or be directly supported by the top flanges of beams or girders. The form supporting steel angles may be supported by or attached to the top flanges.

Stay-in-place metal forms shall not be used in bays where longitudinal slab construction joints are located, under cantilevered slabs such as the overhang outside of fascia members, and bridges over a salt-laden body of water with a clearance of less than 15 feet (4.5 m) above mean high water level.

Welding to the top flanges of steel beams and girders is not permitted in the areas where the top flanges are in tension, or as indicated on the plans. Alternate installation procedures shall be submitted addressing this condition.

Drilling of holes in pre-stressed concrete beams or the use of power-actuated tools on the pre-stressed concrete beams for fastening of the form supports to the pre-stressed concrete beams will not be permitted. Welding of the reinforcing steel to the pre-stressed units is not permitted.

All edges of openings cut for drains, pipes, and similar appurtenances shall be independently supported around the entire periphery of the opening.

All fabricated stay-in-place metal forms shall be unloaded, stored at the Project site at least 4 inches (100 mm) above the ground on platforms, skids or other suitable supports and shall be protected against corrosion and damage and handled in such a manner as to preclude damage to the forms. Damaged material shall be replaced at no additional cost to the State.

Any exposed form or form support metal where the galvanized coating has been damaged, shall be thoroughly cleaned, wire brushed, then coated with two (2) coats of Zinc Dust – Zinc Oxide primer, FS No. TT-P-641d, Type II or another product acceptable to the Engineer.

The forms shall be installed from the topside in accordance with the manufacturer's recommended installation procedures. The form supports shall ensure that the forms retain their correct dimensions and positions during use at all times. Form supports shall provide vertical adjustment to maintain design slab thickness at the crest of corrugation, to compensate for variations in camber of beams and girders and to allow for deflections. Stay-in-place metal forms shall have a minimum depth of the form valley equal to 2 inches (50 mm). The forms shall have closed tapered ends. Lightweight filler material shall be used in the form valleys.

All field cutting shall be done with a steel cutting saw or shears including the cutting of supports, closures and cutouts Flame cutting of forms is not permitted.

All welding shall be performed by Department certified welders in accordance with the "Welding" Subarticle in Section 6.03. Welding of forms to supports is not permitted.

The steel form supports shall be placed in direct contact with the flange of stringer or floor beam flanges and attached by bolts, clips, welding where permitted, or other approved means. Form sheets shall not be permitted to rest directly on the top of the stringer or floor beam flanges. The forms shall be securely fastened to form supports with self-drilling fasteners and shall have a minimum bearing length of 1 inch (25 mm) at each end. In the areas where the form sheets lap, the form sheets shall be securely fastened to one another by fasteners at a maximum spacing of 18 inches (450 mm). The ends of the form sheets shall be securely attached to the support angles with fasteners at a maximum spacing of 18 inches (450 mm), or two (2) corrugation widths, whichever is less.

The depth of the concrete slab shall be as shown on the plans and the corrugated forms shall be placed so that the top of the corrugation will coincide with the bottom of the deck slab. No part of the forms or their supports shall protrude into the slab. All reinforcement in the bottom reinforcement mat shall have a minimum concrete cover of 1 inch (25 mm) unless noted otherwise on the plans.

The completed stay-in-place metal form system shall be sufficiently tight to prevent leakage of mortar. Where forms or their installation are unsatisfactory in the opinion of the Engineer, either before or during placement of the concrete, the Contractor shall correct the defects before proceeding with the work.

(h) Construction Joints: Construction joints other than those shown on the plans will not be permitted without prior approval of the Engineer. In joining fresh concrete to concrete that has already set, the work already in place shall have all loose and foreign material removed, and the surface roughened and thoroughly drenched with water.

All reinforcing steel shall extend continuously through joints. Where unplanned construction joints may be needed, they shall be constructed as directed by the Engineer.

(i) Expansion and Contraction Joints: Expansion and contraction joints shall be constructed at the locations and in accordance with the details specified in the Contract documents. The forming of joint openings shall be dimensioned in accordance with the joint manufacturer's design requirements. Joints include open joints, filled joints, joints sealed with sealants, joints reinforced with steel armor plates or shapes, paraffin coated joints, and joints with combinations of these features.

For mechanical joint systems, the concrete shall be placed in such a manner that does not interfere with the movement of the joint.

Open joints shall be placed at locations designated on the plans and shall be formed by the insertion and subsequent removal of templates of wood, metal or other suitable material. The templates shall be so constructed that their removal may be readily accomplished without damage to the work.

Filled joints shall be made with joint filler, the materials for which shall conform to the requirements of the plans and of these specifications.

(j) Pipes, Conduits and Utility Installations: The Contractor shall coordinate the installation of pipes, conduits and utilities as shown on the plans and in conformance with the Contract documents or as directed by the Engineer. The openings accommodating such pipe, conduit and utility installations shall be incorporated into the formwork by the Contractor.

(k) Anchorages: Anchor bolts and systems shall be set to the requirements of the plans and Contract documents. Anchor bolts and systems shall be clean and free of dirt, moisture or other foreign materials at the time of installation. The anchor bolts and systems shall be installed prior to placing concrete.

With the Engineer's approval, the Contractor may install anchorages after placement and setting of the concrete or in formed holes. The anchorages shall be installed into drilled or formed holes having a diameter and a depth suitable to receive the bolts in accordance with the grout manufacturer's requirements. Such holes shall be located to avoid damage to the existing reinforcement. All holes shall be perpendicular to the plane surface. The Contractor shall take every precaution necessary to prevent damage to the concrete due to freezing of water or grout in anchor bolt holes.

(l) Ornament or Reverse Moulds: Ornamental work, when so noted on the plans, shall be formed by the use of reverse moulds. These moulds shall be produced by a qualified manufacturer approved by the Engineer. They shall be built in accordance with the general dimensions and appearance shown on the plans. The Contractor shall submit all detailed drawings, models, or carvings for review by the Engineer before the moulds are made.

The Contractor shall be responsible for their condition at all times, and shall be required to remove and replace any damaged or defective moulds at no additional cost to the State.

The surfaces of the moulds shall be given a coating of form release agent to prevent the adherence of concrete. Any material which will adhere to or discolor the concrete shall not be used.

Form Liners, if required, shall be installed per the Contract Special Provisions.

(m) Removal of Falsework and Forms: The Contractor shall consider the location and character of the structure, the weather, the materials used in the mix, and other conditions influencing the early strength of the concrete when removing forms and falsework. Methods of removal likely to cause damage to the concrete surface shall not be used.

Supports shall be removed in such a manner as to permit the structure to uniformly and gradually take the stresses due to its own weight. For structures of two (2) or more spans, the sequence of falsework release shall be as specified in the Contract documents or as approved by the Engineer.

Removal shall be controlled by field-cured cylinder tests. The removal shall not begin until the concrete has achieved seventy-five percent (75%) of the design compressive strength. To facilitate finishing, side forms carrying no load may be removed after twenty-four (24) hours with the permission of the Engineer, but the curing process must be continued for seven (7) days.

When the results of field-cured cylinder tests are unavailable, the following periods, exclusive of days when the temperature drops below 40ºF (5ºC), may govern the removal of forms:

Form Removal Requirements	
Structure Element	Minimum Time Period
Arch Centers, centering under beams, pier caps, and unsupported elements	14 days
Slabs on grade, Abutments and Walls	24 hours
Columns	2 days
Bridge Decks	28 days

The Contractor may submit alternate methods to determine the in-place strength of the concrete for removal of forms and falsework, for review and approval by the Engineer.

2. Protection from Environmental Conditions: The concrete shall be protected from damage due to weather or other environmental conditions during placing and curing periods. In-place concrete that has been damaged by weather conditions shall be either repaired to an acceptable condition or removed and replaced as determined by the Engineer.

(a) Rain Protection: The placement of concrete shall not commence or continue unless adequate protection satisfactory to the Engineer is provided by the Contractor.

(b) Hot Weather Protection: When the ambient air temperature is above 90ºF (32ºC), the forms, which will come in contact with the mix shall be cooled to below 90ºF (32ºC) for a minimum of one (1) hour prior to and one (1) hour after completion of the concrete placement by means of a water spray or other methods satisfactory to the Engineer.

(c) Cold Weather Protection: When there is a probability of ambient air temperature below 40ºF (5ºC) during placement and curing, a Cold-Weather Concreting Plan shall be submitted to the Engineer for review and comment. The Plan shall detail the methods and equipment, including temperature measuring devices, that will be used to ensure that the required concrete and air temperatures are maintained.

1. Placement: The forms, reinforcing steel, steel beam flanges, and other surfaces which will come in contact with the mix shall be heated to a minimum of 40ºF (5ºC), by methods satisfactory to the Engineer, for a minimum of one (1) hour prior to, and maintained throughout, concrete placement.

2. Curing: For the first six (6) days, considered the initial cure period, the concrete shall be maintained at a temperature of not less than 45ºF (7ºC) and the air temperature surrounding the structure shall be maintained at a temperature of not less than 60ºF (16ºC). When the concrete mix includes pozzolans or slag, the initial cure period shall be increased to ten (10) days. After the initial cure period, the air surrounding the structure shall be maintained above 40º F (5ºC) for an additional eight (8) days. If external heating is employed, the heat shall be applied and withdrawn gradually and uniformly so that no part of the concrete surface is heated to more than 90ºF (32ºC) or caused to change temperature by more than 20ºF (11ºC) in eight (8) hours. The Engineer may reduce or increase the amount of time that the structure must be protected or heated based on an indication of in-place concrete strength acceptable to the Engineer.

(d) Additional Requirements for Bridge Decks: Prior to the application of curing materials, all the concrete placed on bridge decks shall be protected from damage due to rapid evaporation by methods acceptable to the Engineer. During periods of low humidity (less than 60% relative humidity), sustained winds of 25 mph (40 kph) or more, or ambient air temperatures greater than 80ºF (25ºC) the Contractor shall provide written details of additional measures to be taken during placement and curing.

Protection may include increasing the humidity of the surrounding air with fog sprayers and employing wind-breaks or sun-shades. Additional actions may include reduction of the temperature of the concrete prior to placement, scheduling placement during cooler times of days or nights, or a combination of these actions.

(e) Concrete Exposed to Salt Water: No Construction joints shall be formed between the levels of extreme low water and extreme high water or the upper limit of wave action as determined by the Engineer.

3. Transportation and Delivery of Concrete: All material delivered to the Project shall be supplied by a producer qualified in accordance with Section M.03. The producer shall have sufficient plant capacity and trucks to ensure continuous delivery at the rate required to prevent the formation of cold joints.

(a) Material Documentation: All vendors producing concrete must have their weigh scales and mixing plant automated to provide a detailed ticket. Delivery tickets must include the following information:

1. State of Connecticut printed on ticket
2. Name of producer, identification of plant
3. Date and time of day
4. Type of material
5. Cubic yards (cubic meters) of material loaded into truck
6. Project number, purchase order number, name of Contractor (if Contractor other than producer)
7. Truck number for specific identification of truck
8. Individual aggregate, cement, water weights (masses) and any admixtures shall be printed on plant tickets
9. Water/cement ratio, and
10. Additional water allowance in gallons (liters) based on water/cement ratio for mix

A State inspector may be present to monitor batching and weighing operations.

The Contractor shall notify the Engineer immediately if, during the production day, there is a malfunction of the recording system in the automated plant or weigh scales.

Manually written tickets containing all required information may be allowed for up to one (1) hour after malfunction provided they are signed by an authorized representative of the producer.

(b) Transportation of Mixture: Trucks delivering concrete shall be qualified in accordance with Section M.03.

If the concrete mix arrives at the Project with a slump lower than allowed by specification, water may be considered as a means to temper concrete to bring the slump back to within specification. This tempering may only be done prior to discharge with the permission of the Engineer. The quantity of water in gallons (liters) added to the concrete cannot exceed the allowance shown on the delivery ticket.

The concrete shall be completely discharged into the forms within one and one-half (1-1/2) hours from the batch time stamped on the delivery ticket. This time may be extended if the measured temperature of the concrete is below 90ºF (32ºC). This time may also be reduced if the temperature of the concrete is over 90ºF (32ºC).

Rejected concrete shall be disposed of by the Contractor at no cost to the State.

The addition of chemical admixtures or air entrainment admixtures at the Project site, to increase the workability or to alter the time of set, will only be permitted if prior approval has been granted by the Engineer. The addition of air entrainment admixtures at the Project site will only be permitted by the producer's quality control staff. The Contractor is responsible for follow-up quality control testing to verify compliance with the Specifications.

4. Acceptance Testing and Test Specimens: The Contractor shall furnish the facilities and concrete required for sampling, transport to the testing location in the field, performing field testing and for casting sample cylinders for compressive-strength determinations. The Department will furnish personnel for sampling and casting Acceptance specimens and the number of specimens required will be determined by the Engineer. The equipment for the Department's testing is provided for elsewhere in the Contract.

(a) Temperature, Air Content and Slump: Field testing in accordance with AASHTO T-23, "Making and Curing Concrete Test Specimens in the Field" will be performed at the point of placement and at a frequency determined by the Engineer.

English Units

Standard Mix Class	Air Content	Slump	Concrete Temperature
A (3300 psi)	6.0 +/- 1.5%	4” +/- 1”	60º-90ºF
C (3300 psi)			
F (4400 psi)			
Modified Standards[1]	6.0 +/- 1.5% [2]	4” +/- 1” [2]	
Special Provision Mix[3]	As specified	As specified	

[1] Modifications to Standard Mixes, including mixes placed by pumping, shall be reviewed by the Engineer prior to use. These include but are not limited to the use of chemical admixtures such as high range water reducing (HRWR) admixtures and the use of coarse aggregate sizes for that class not specified in M.03.

[2] If the only modification is the addition of HRWR, the maximum allowable slump shall be 7 inches.

[3] All concrete mixes with a mix design strength not shown in the table must be approved by the Engineer on a case-by-case basis. Limits on the plastic properties and strength requirements of these mixes are listed in the Specifications.

Metric Units

Standard Mix Class	Air Content	Slump	Concrete Temperature
A (23MPa)	6.0 +/- 1.5%	100 mm +/- 25mm	15.5º-32ºC
C (23 MPa)			
F (30 MPa)			
Modified Standards[1]	6.0 +/- 1.5% [2]	100mm +/- 25mm [2]	
Special Provision Mix[3]	As specified	As specified	

[1] Modifications to Standard Mixes, including mixes placed by pumping, shall be reviewed by the Engineer prior to use. These include but are not limited to the use of chemical admixtures such as high range water reducing (HRWR) admixtures and the use of coarse aggregate sizes for that class not specified in M.03.

[2] If the only modification is the addition of HRWR, the maximum allowable slump shall be 175 mm.

[3] All concrete mixes with a mix design strength not shown in the table must be approved by the Engineer on a case-by-case basis. Limits on the plastic properties and strength requirements of these mixes are listed in the Specifications.

(b) Acceptance Testing and Compressive Strength Specimens: Concrete samples are to be taken at the point of placement into the forms or molds. Representatives of the Engineer will sample the mix.

The Contractor shall provide and maintain facilities on the Project site, acceptable to the Engineer, for sampling, transporting the initial sample, casting, safe storage and initial curing of the concrete test specimens as required by AASHTO T-23. This shall include but not be limited to a sampling receptacle, a means of transport of the initial concrete sample from the location of the concrete placement to the testing location, a level and

protected area of adequate size to perform testing, and a specimen storage container capable of maintaining the temperature and moisture requirements for initial curing of Acceptance specimens. The distance from the location of concrete placement to the location of testing and initial curing shall be 100 feet (30 m) or less, unless otherwise approved by the Engineer.

The specimen storage container described in this section is in addition to the concrete cylinder curing box provided for elsewhere in the Contract documents.

After initial curing, the test specimens will be transported by Department personnel and stored in the concrete cylinder curing box until they can be transported to the Division of Materials Testing for strength evaluation.

(c) Sampling Procedure for Pumping: It is the responsibility of the Contractor to provide concrete that meets required specifications at the point of placement.

Samples of concrete shall be taken at the discharge end of the pump at the point of placement with the exception of underwater concrete. The Contractor may submit an alternate location to provide a sample from the discharge end of the pump with verification showing that the characteristics of the mix will not be altered from that which would have been attained at the point of placement. The Engineer will review the documentation and other extenuating circumstances when evaluating the request.

In the case of underwater concrete the Contractor shall submit the proposed sampling location with the submittals required in 6.01.03-6(f).

(d) Additional field testing: Additional field testing such as density and yield measurements may be required at the time of placement as determined by the Engineer.

5. Progression Cylinders and Compressive Strength Specimens: Progression Cylinders outlined in this section are field cured compressive strength specimens taken for information related to when a structure or segment of a structure can be loaded or put into service, adequacy of curing and protection of concrete in the structure, or when formwork or shoring may be removed from the structure. The information produced from strength results of Progression Cylinders will not be considered for acceptance of the concrete.

The personnel, equipment, and molds for sampling, casting, curing and testing of Progression Cylinders shall be furnished by the Contractor at no expense to the Department.

Sampling, casting, and field curing of the specimens shall be performed in accordance with AASHTO T23 by an ACI Concrete Field Testing Technician Grade 1 or higher and will be witnessed by a representative of the Department.

The sample shall be taken at the point of placement into the forms or molds from one (1) or more of the same truck loads that an Acceptance sample is taken from.

A minimum of two (2) cylinder results will be used to determine in-place strength.

Compression testing shall be performed in accordance with AASHTO T-22 by personnel approved by the Engineer.

A Certified Test Report in accordance with Article 1.06.07 shall be provided to the Engineer reporting the Progression Cylinder test results. A copy of the results of the compressive strength testing shall be provided to the Engineer at least twenty-four (24) hours prior to any Project activity that the results may control.

6. Handling and Placing Concrete: Concrete shall be handled, placed, and consolidated by methods acceptable to the Engineer that will not segregate the mix and shall result in a dense homogeneous concrete. The methods used shall not cause displacement of reinforcing steel or other materials to be embedded in the concrete. Concrete shall not be placed until the forms and all materials have been inspected by the Engineer. All mortar from previous placements, debris, and foreign material shall be removed from the forms and steel prior to commencing placement. The forms and subgrade shall be thoroughly moistened with water immediately before concrete is placed. All water that has ponded within the forms shall also be removed. Temporary form spreader devices shall not be left in place.

All laitance or unsound material shall be removed before placing substructure concrete onto the surface of any concrete placed underwater.

Placement of concrete for each section of the structure shall be performed continuously between construction or expansion joints as shown on the plans. The delivery rate, placing sequence and methods shall be such that fresh concrete is always placed and consolidated against previously placed concrete before initial set has occurred. The temperature of the concrete mixture during placement shall be maintained between 60ºF (16ºC) and 90ºF (32ºC). During and after placement of concrete, care shall be taken not to damage the concrete or break the bond with reinforcing steel. Platforms for workers and equipment shall not be supported directly on any reinforcing steel. Forces that may damage the concrete shall not be applied to the forms or reinforcing steel.

(a) Sequence of Placement: The sequence of placement shall be in accordance with the Contract documents or as permitted by the Engineer.

Concrete for integral horizontal members, such as caps, slabs, or footings shall not be placed until the concrete for the columns, substructure, culvert walls and similar vertical members has achieved sufficient strength as stated in 6.01.03-1(m).

The concrete in arches shall be placed in such a manner as to load the formwork uniformly and symmetrically.

The base slab or footings of cast-in-place box culverts shall reach sufficient strength before the remainder of the culvert is constructed.

(b) Placement Methods: The Contractor shall notify the Engineer at least twenty-four (24) hours in advance of intention to place concrete.

Vibrators shall not be used to shift the fresh concrete horizontally. Vibrators shall be adequate to consolidate the concrete and integrate it with the previous lift.

The rate of concrete placement must not produce loadings that exceed those considered in the design of the forms.

The use of chutes and pipes for conveying concrete into the forms must be reviewed by the Engineer. Chutes shall be clean, lined with smooth watertight material and, when steep slopes are involved, shall be equipped with baffles or reverses. When the discharge must be intermittent, a hopper or other device for regulating the discharge shall be provided.

Aluminum shall not be permanently incorporated into the concrete unless otherwise specified.

When placing operations involve dropping the concrete more than 5 feet (1500 mm), the Contractor shall take action to prevent segregation of the mix and spattering of mortar on steel and forms above the elevation of the lift being placed. This restriction shall not apply to cast-in-place pilings.

When using stay-in-place forms, concrete shall not be dropped more than 3 feet (1000 mm) above the top of the forms, and the concrete shall be discharged directly over the beams or girders.

(c) Pumping: The Contractor shall use equipment specifically manufactured to pump concrete mixes and that meets the needs of the specific concrete placement.

(d) Consolidation: Unless otherwise specified, all concrete, except concrete placed under water, shall be sufficiently consolidated by mechanical vibration immediately after placement.

The Contractor shall provide a sufficient number of commercially available mechanical immersion type vibrators to properly consolidate the concrete immediately after it is placed in the forms unless external form vibrators are used. The Contractor shall have an adequate number of operable vibrators available in case of breakdown.

External form vibrators may be used if submitted prior to concrete placement and reviewed by the Engineer.

Vibration shall not be applied directly to the reinforcement or hardened concrete. Special care shall be taken in placing and consolidating concrete around ornamental moulds, form liners and other embedded items. The vibrator shall not touch these items at any time.

(e) Additional Requirements for Bridge Decks: At least fifteen (15) days before the erection of the screed rails, the Contractor shall submit screed erection plans, grades and sequence of concrete placement and proposed rate of placing concrete for review by the Engineer. These plans shall include details of equipment to be

used in the placement and finishing of the concrete, including the number and type of personnel who will be engaged in placing the concrete. The screed equipment shall be a commercially available vibratory system. The use of wooden screeds is prohibited.

When setting screed rails for mechanical finishing, the Contractor shall take into consideration and make proper allowances for the deflection of the bridge superstructure due to all operations.

Screed and runway supports shall not be located on any stay-in-place metal form sheets, form supports or reinforcing steel. The Contractor shall operate the mechanical screed at least twenty-four (24) hours prior to actual placement of the concrete to verify deck survey and equipment operations to the satisfaction of the Engineer.

Concrete shall be deposited in a uniform manner across the entire width being placed, and only two (2) passes of the transverse screed will be permitted over a given deck area, unless otherwise allowed by the Engineer.

If the Contractor proposes to place concrete outside of daylight hours, an adequate lighting system must be provided.

Concrete shall be deposited in accordance with the placement sequence as noted on the plans. If no sequence is indicated, the Contractor shall provide a placement sequence to the Engineer for review. The placement sequence shall proceed in such a manner that the total deflection or settlement of supporting members, and final finishing of the surface will occur before initial set of the concrete takes place.

At construction joints, concrete shall not be placed against the previously placed concrete for at least twelve (12) hours unless otherwise allowed by the Engineer.

(f) Underwater Placement: Concrete may only be placed under water within a cofferdam unless otherwise specified in the documents or otherwise allowed by the Engineer. Placement shall begin following inspection and acceptance of the depth and character of the foundation material by the Engineer.

Underwater concrete mixes are considered non-standard designs and shall be submitted to the Engineer for approval. Typically a minimum of ten percent (10%) additional cement than comparable non-underwater mixes will be required.

Underwater concrete shall be placed continuously with the surface of the concrete kept as horizontal as practical. To ensure thorough bonding, each succeeding layer shall be placed before the preceding layer has taken initial set. For large concrete placements, more than one (1) tremie or pump shall be used to ensure compliance with this requirement.

Mass concrete placement requirements, outlined in 6.01.03-6(g), do not apply to underwater concrete.

To prevent segregation, underwater concrete shall be placed in a compact mass, in its final position, by means of a tremie, concrete pump, or other approved method and shall not be disturbed. Still water shall be maintained at the point of deposit. Cofferdams shall be vented during the placement and curing of the concrete to equalize the hydrostatic pressure and thus prevent flow of water through the concrete.

If a tremie is used, the method of depositing the concrete shall be detailed in a working drawing submitted to the Engineer for review. The tube shall have watertight couplings and shall permit the free movement of the discharge end over the area of the work.

(g) Mass concrete placement: Mass concrete placement shall be defined as any placement, excluding underwater concrete placement, in which the concrete being cast has dimensions of 5 feet (1500 mm) or greater in each of three (3) different directions. For placements with a circular cross-section, a mass concrete placement shall be defined as any placement that has a diameter of 6 feet (1800 mm) or greater and a height of 5 feet (1500 mm) or greater. For all mass concrete placements, the mix temperature shall not exceed 85°F (30°C) as measured at point of discharge into the forms.

Any special concrete mix design proposed by the Contractor to meet the above temperature requirements shall be submitted to the Engineer for review.

7. Finishing Plastic Concrete: Unless otherwise specified in the Contract documents, after concrete has been consolidated and prior to final curing, all surfaces of concrete that are not placed against forms shall be struck-off to the planned elevation or slope. The surface shall be finished by floating with an acceptable tool. While the concrete is still in a workable state, all construction and expansion joints shall be tooled with an edger. Joint filler shall be left exposed. For requirements on float finish, refer to 6.01.03-10, “Finishing Concrete Surfaces.”

After completion of the placing and finishing operation and for at least twelve (12) hours after the concrete has set, the Contractor shall not operate any equipment in the immediate vicinity of the freshly placed concrete if, in the opinion of the Engineer, it could cause excessive vibration, movement or deflection of the forms.

The addition of water to the surface of the concrete to assist in finishing operations will not be permitted.

(a) Bridge Decks: After the concrete has been consolidated and brought to the proper elevation by the screed machine, it shall be finished by use of a suitable float. The Contractor shall not disturb the fresh concrete after it has been finished. All finishing work, including the application of the fog spray and placement of the curing mats, shall be performed from work bridges supported above the deck surface. A work bridge shall be made available to the Engineer for inspection of the concrete work.

Surfaces that are to be covered with a waterproofing membrane shall be finished to a smooth surface, free of mortar ridges and other projections and in accordance with the membrane manufacturer's recommendations.

Unless otherwise noted in the Contract, the concrete wearing surfaces shall be given a skid-resistant texture by dragging, brooming, tining, or by a combination of these methods These methods shall be done after floating and at such time and in such manner that the desired texture will be achieved while minimizing displacement of the larger aggregate particles.

1. Dragging: The surface shall be finished by dragging a seamless strip of damp burlap over the surface. The burlap to be dragged shall consist of sufficient layers and have sufficient length in contact with the concrete to slightly groove the surface. The burlap shall be drawn longitudinally along the surface in a slow manner so as to leave an even texture. The burlap shall be kept damp, clean, and free of particles of hardened concrete. The Contractor may propose an alternate material for the Engineer's consideration.

2. Tining: Tining shall be in a transverse direction using a wire broom, comb, or float having a single row of tines or fins. The tining grooves shall be between 1/16 inch (1.5 mm) and 3/16 inch (5 mm) wide and between 1/8 inch (3 mm) and 3/16 inch (5 mm) deep, spaced 1/2 inch (12.5 mm) to 3/4 inch (20 mm) on centers. Tining shall be discontinued 12 inches (300 mm) from the curb line on bridge decks. The area adjacent to the curbs shall be given a light broom finish longitudinally. As an alternative, tining may be achieved using a machine designed specifically for tining or grooving concrete pavements.

The transverse grooving shall be performed when the grooves can be formed to a maximum depth of 3/16 inch (5 mm) with relative ease and without the walls of the grooves closing in on each other. The tining shall be aligned so as to prevent overlapping of grooves in any two (2) successive transverse passes. The Contractor shall measure the depth of the grooves in the presence of the Engineer with an appropriate device to ensure compliance.

(b) Surface Testing and Correction: The completed surface shall be constructed in accordance with grades and cross slopes shown on the plans. The entire surface shall be checked by the Contractor in the presence of the Engineer, with an acceptable 10 foot (3 meter) straightedge.

1. The surface shall not vary more than +/- 1/8 inch (3 mm) in 10 feet (3 m) for decks which will not be covered with an overlay.

2. The surface shall not vary more than +/- 1/4 inch (6 mm) in 10 feet (3 m) for decks which will be covered with an overlay.

Variances greater than these, which, in the opinion of the Engineer, may adversely affect the riding qualities of the surface shall be corrected, and this shall be done at the expense of the Contractor. The Contractor shall submit a corrective procedure to the Engineer for review and approval. The procedure shall correct such irregularities by methods such as, but not limited to, concrete planing or grooving.

8. Bearing Surfaces: Concrete surfaces under metallic masonry plates and elastomeric bearings shall have a float finish. After the concrete has set, the area which will be in contact with the masonry plate shall be ground as necessary to provide full and even bearing. The finished surface shall not vary from a straightedge laid on the surface in any direction within the limits of the masonry plate by more than 0.0625 inches (1.5 mm). Surfaces which fail to conform shall be ground or filled until acceptable to the Engineer.

9. Curing Concrete: All newly placed concrete shall be cured so as to prevent loss of water by use of the methods specified. The Engineer may request that the Contractor furnish a curing plan.

The duration of the initial and final curing period in total shall continue uninterrupted for a minimum of seven (7) days.

(a) Curing Methods:

1. Forms-In-Place Method: Formed surfaces of concrete may be cured by retaining the forms in place without loosening. During periods of hot weather, water shall be applied to the forms until the Engineer determines that it is no longer required.

2. Water Method: Exposed concrete surfaces shall be kept continuously wet by ponding, spraying, or covering with materials that are kept continuously and thoroughly wet. Such materials may consist of cotton mats, multiple layers of burlap, or other approved materials that do not discolor or otherwise damage the concrete.

3. Waterproof Cover Method: This method shall consist of covering exposed surfaces with a waterproof sheet material to prevent moisture loss from the concrete. The concrete shall be wet at the time the cover is installed. The sheets shall be of the widest practicable width and adjacent sheets shall overlap a minimum of 6.0 inches (150 mm) to form a waterproof cover of the entire concrete surface and shall be adequately secured. Broken or damaged sheets shall be immediately repaired and the concrete shall be remoistened.

(b) Additional Requirements for Bridge Decks:

1. Curing Plan: The Contractor shall submit to the Engineer, at least fourteen (14) days prior to the placement of concrete for the bridge deck, a detailed curing plan that describes the following:

   A. the initial and final curing durations,
   B. equipment and materials to be used for curing concrete and monitoring concrete temperature, and
   C. proposed primary and secondary water and heat sources

2. Initial Curing Period: A water fog spray shall be used by the Contractor from the time of initial placement until the final curing period begins. The amount of fog spray shall be strictly controlled so that accumulations of standing or flowing water on the surface of the concrete shall not occur.

   Should atmospheric conditions render the use of fog spray impractical, the Contractor shall request approval from the Engineer to use a curing compound that meets the requirements of Section M.03 in lieu of a fog spray. The application shall be in accordance with the manufacturer's recommendation and be compatible with the membrane waterproofing.

3. Final Curing: After completion of finishing and as soon as any bleed water has dissipated and the concrete reaches sufficient strength to avoid marring, the Final curing period shall begin and the entire concrete surface shall be covered with water-retaining materials such as cotton mats, multiple layers of burlap, or other materials approved by the Engineer. Materials used shall be kept saturated by means of an acceptable sprinkler or wetting system.

   The Contractor may cover the wet water-retaining material with a suitable polyethylene film to minimize evaporation during the curing period. The use of the polyethylene film does not relieve the Contractor from maintaining saturation of the curing materials.

4. Temperature Monitoring: The internal temperature of the concrete shall be monitored with a calibrated continuous recording thermometer for a minimum of seven (7) days. The air temperature at the concrete surface or the air temperature between the concrete surface and its protective covering shall be monitored with a minimum of one (1) recording thermometer.

   The number and placement of the thermometers will be determined by the Engineer. A minimum of two (2) thermometers per concrete placement shall be provided by the Contractor.

   The following types of thermometers shall be used to monitor curing temperatures:

   A. Continuously Recording Thermometer: The thermometer shall be capable of continuously recording temperatures within a range of -4 ºF to 122 ºF (-20°C to 50°C) for a minimum of twenty-four (24) hours.

   B. Maximum–Minimum Recording Thermometer: For all placements, the thermometer shall be capable of recording maximum and minimum temperatures in a range of -4 ºF to 122 ºF (-20°C to 50°C).

10. Finishing Concrete Surfaces: Any minor repairs due to fins, bulges, offsets and irregular projections shall be performed immediately following the removal of forms. For areas of newly placed concrete that are honeycombed or segregated the Contractor shall provide a written corrective procedure for review by the Engineer prior to the work being performed. Construction and expansion joints in the completed work shall be left

carefully tooled and free of mortar and concrete. The joint filler shall be left exposed for its full length with clean and true edges.

The cavities produced by form ties and all other holes, broken corners or edges, and other defects shall be cleaned, saturated with water, pointed and trued with a mortar conforming to M.11.04. Cement similar in color to the exposed surface being repaired shall be added to the mortar. Mortar used in pointing shall be used within one (1) hour of mixing. The concrete shall be finished as defined below if required and the cure continued as previously specified in "Curing Concrete."

Finishing work shall not interrupt the curing period unless permitted by the Engineer. The curing period may be extended to provide the minimum total number of days required.

Concrete surface finishes shall be classified as follows:

(a) Float Finish: This finish shall be achieved by placing an excess of material in the form and removing or striking off of such excess forcing the coarse aggregate below the mortar surface. Concave surfaces in which water will be retained will not be allowed. After the concrete has been struck off, the surface shall be thoroughly worked and floated. Before this last finish has set, the surface shall be lightly stripped with a fine brush to remove the surface cement film, leaving a fine-grained, smooth, but sanded texture. Curing, as specified elsewhere, shall follow. Any surfaces that will support appurtenances such as light standards, railing, or fences shall be finished in accordance with 6.01.03-8, “Bearing Surfaces.”

(b) Rubbed Finish: The initial rubbing shall only be allowed within three (3) days after placement. The entire surface shall be thoroughly wet with a brush and rubbed with a No. 16 Carborundum Stone or an abrasive of equal quality, bringing the surface to a paste. The rubbing shall be continued sufficiently to remove all form marks and projections, producing a smooth, dense surface without pits or irregularities. The paste formed by the rubbing may be finished by stripping with a clean brush, or it may be spread uniformly over the surface and allowed to re-set. If all or portions of the rubbed surface are unacceptable to the Engineer or a rubbed finish is not provided within three (3) days after removal of forms, the Contractor will be directed to provide a grout clean down finish.

(c) Grout Clean-Down Finish: As soon as all cavities have been filled as required elsewhere and the cement mortar has set sufficiently, grout clean-down shall be performed. All burrs, unevenness, laitance, including that in air holes, and any other material which will adversely affect the bond of the grout to the concrete, shall be removed by acceptable methods. This cleaning shall be done from the top or uppermost part of the surface to be finished to the bottom.

A mixture of a fine aggregate and Portland cement shall be thoroughly blended while dry. The proportions shall be such that when mixed with the proper amount of water, the color will match that of the concrete to be finished. Water shall be added to this mixture in an amount which will bring the grout to a workable thick paint-like consistency.

The surface to be treated shall be thoroughly wetted with a sufficient amount of water to prevent the absorption of water from the grout. Grout shall then be applied to the wetted surface before setting of the grout occurs. Grout which has set shall not be re-tempered and shall be disposed of by the Contractor at no cost to the State.

The grout shall be uniformly applied over the entire surface, completely filling all air bubbles and holes. Immediately after applying the grout, the surface shall be floated with a suitable float, scouring the surface vigorously. While the grout is still plastic, all excess grout shall be removed.

After the final rubbing is completed and the surface has dried, it shall be rubbed to remove loose powder and shall be left free from all unsound patches, paste, powder, and objectionable marks. Wetting, application and removal of excess grout shall be completed in one (1) work shift.

All finished surfaces shall be cured for a minimum of twenty-four (24) hours. Horizontal surfaces shall have a float finish and vertical exposed surfaces shall have a rubbed finish. A grout clean down finish may be substituted for a rubbed finish as noted in this section or as directed by the Engineer

11. Mortar, Grout, Epoxy and Joint Seal

(a) Mortar and Grout: This work consists of the making and placing of mortar and grout. At least forty-eight (48) hours prior to the planned use, a copy of the installation instructions and MSDS sheet(s) shall be provided to the Engineer for review and concurrence of their applicability and for verification of proper hole sizes in concrete structures. Such uses include mortar for filling under masonry plates, mortar used to fill voids and repair surface defects, grout used to fill sleeves for anchor bolts, and mortar and grout for other such uses where required or approved.

Concrete areas to be in contact with the mortar or grout shall be cleaned of all loose or foreign material that would in any way prevent bond, and the concrete surfaces shall be flushed with water and allowed to dry until no free-standing water is present.

The mortar or grout shall completely fill and shall be tightly packed into recesses and holes, on surfaces, under structural members, and at other locations specified. After placing, all surfaces of mortar or grout shall be cured as previously specified in 6.01.03-9(a)-2 “Curing Concrete – Water Method," for a period of not less than three (3) days.

(b) Epoxy: The epoxy shall be prepared and placed in accordance with the manufacturer's directions and with the equipment prescribed by the manufacturer. Instructions furnished by the supplier for the safe storage, mixing, handling and

application of the epoxy shall be followed. Contents of damaged or previously opened containers shall not be used.

(c) Joint Seal: This work consists of sealing joints where shown on the plans or as otherwise directed by the Engineer.

Before placement of the sealing material, the joints shall be thoroughly cleaned of all scale, loose concrete, dirt, dust or other foreign matter. Projections of concrete into the joint space shall be removed. The joint shall be clean and dry before the sealing compound is applied.

The joint sealant shall be prepared and placed in accordance with the manufacturer's directions and with the equipment prescribed by the manufacturer. The sealing compound shall be flush with, or not more than 1/8 inch (3 mm) above the adjacent surface of concrete, cutting off all excess compounds after the application. The joints shall be sealed in a neat and workmanlike manner and when the work is completed, the joints shall effectively seal against infiltration of moisture and water.

The Contractor shall arrange for, and have present at the commencement of the joint-sealing operation, a technically competent manufacturer's representative knowledgeable in the methods of installation of the sealant. The Contractor shall also arrange to have the representative present at such other times as the Engineer may request.

(d) Closed Cell Elastomer: The closed cell elastomer shall be of the thickness, size and type specified and installed as shown on the plans and shall be in accordance with Section M.03.

12. Application of Loads: Loads shall not be applied to concrete structures until the concrete has attained sufficient strength and, when applicable, sufficient pre-stressing and post tensioning has been completed, so that damage will not occur. The means to determine when the concrete has attained sufficient strength shall be the use of Progression cylinders as defined elsewhere in this specification, or other means approved in advance by the Engineer.

(a) Earth Loads: The placement of backfill shall not begin until the concrete is cured and has reached at least eighty percent (80%) of its specified strength unless otherwise permitted by the Engineer. The sequence of placing backfill around structures shall minimize overturning or sliding forces and flexural stresses in the concrete.

(b) Construction Loads: Light materials and equipment may be hand carried onto bridge decks only after the concrete has been in place at least twenty-four (24) hours providing curing is not interfered with and the surface texture is not damaged.

Prior to the concrete achieving its specified compressive strength, any other live or dead loads imposed on existing, new, or partially completed portions of structures, shall not exceed the reduced load carrying capacity of the structure, or portion of structure. The Contractor may be required to submit calculations to the Engineer

that verify these requirements are being met. The compressive strength of concrete (f' c) to be used in computing the load-carrying capacity shall be the smaller of the actual field compressive strength at the time of loading or the specified design strength of the concrete. The means to determine the actual field compressive strength shall be approved by the Engineer.

For post-tensioned structures, no live or dead loads shall be allowed on any span until the steel for that span has been tensioned.

(c) Loading of Completed Elements: Precast concrete or steel girders shall not be placed on substructure elements until the substructure concrete has attained eighty-five percent (85%) of its specified strength.

No load shall be allowed on mortar or grout that has been in place less than seventy-two (72) hours.

(d) Traffic Loads: The concrete deck will not be opened to traffic until at least fourteen (14) days after the last placement of deck concrete and until such concrete has attained its specified strength.

13. Dispute Resolution: The basis of any dispute resolution is side-by-side and quality control testing by the Contractor or the Contractor's representative. The Contractor and Engineer should perform independent testing on the material to reasonably establish the true characteristics of the material at the time of delivery. Absent of Contractor QC testing, the Engineer's test results will apply to the quantity of concrete represented by the sample, not to exceed 75 cubic yards (60 cubic meters).

(a) Air Content: Contractor QC Testing must be performed by personnel qualified by The American Concrete Institute as an ACI Concrete Field Testing Technician Grade 1 or higher and performed in accordance with AASHTO T-23. If the Contractor's test results vary from those of the Engineer, the Contractor shall immediately notify the Engineer of the difference and work cooperatively to determine the reasonable cause and recognize the valid test. Should there be agreement, the result of the valid test will be used for acceptance and adjustment purposes for that lot of material. Should there not be an agreement as to the valid test, an additional set of tests should be performed. Results of all valid tests on the same lot may be averaged and used for acceptance and adjustment purposes. Should the Contractor wish to perform additional QC testing on subsequent material, the lot sizes may be adjusted to the amount of material included in that specific delivery. Any such QC testing must be witnessed and agreed to by the Engineer.

(b) Compressive Strength: Contractor QC testing for compressive strength must be performed in accordance with AASHTO T-22 by personnel approved by the Engineer. Samples used to dispute the Engineer's test results must be made simultaneously and from the same batch of concrete. Should the Contractor wish to pursue a dispute resolution with regard to compressive strength, the Contractor shall submit in writing to the Engineer all test results, control charts, or other documentation that may be useful in determining if the specific lot(s) of material met the Contract specifications. The Engineer will consider the submittal and may average specific test results on the disputed lot(s) for acceptance and adjustment purposes. Destructive testing of any kind on the placed concrete structure will not be allowed.

6.01.04—Method of Measurement: This work will be measured for payment as follows:

1. Concrete: The quantity of concrete will be the actual volume in cubic yards (cubic meters) of the specified class or classes, with the exception of underwater concrete, completed and accepted within the neat lines as shown on the plans or as ordered by the Engineer.

When concrete is placed against bedrock, a maximum of 6 additional inches (150 additional millimeters) beyond the neat lines can be measured for payment.

No deduction will be made for panels, form liners, reinforcing bars, structural steel shapes or for pile heads. There will be no deduction made for the volume occupied by culvert and drainage pipes, scuppers, weep holes, public utility structures or any other opening, unless the surface area of any such single opening is 9 square feet (1 square meter) or more.

In the case of culverts or drainage pipes, the computation of the surface area will be based on the nominal diameter of the pipe, disregarding the thickness of the shell.

Miscellaneous materials necessary for completion of the work such as felt, mortar, grout, epoxy, joint seal, paraffin coating and closed cell elastomer will not be measured for payment.

Incidental work such as forming for anchor bolts, utilities, keyways, and sampling and testing will not be measured for payment.

2. Underwater Concrete: When underwater concrete is used, it will be measured by the volume in cubic yards (cubic meters) within the actual horizontal limits of the cofferdam and between the elevations established by the Engineer.

3. Joint Filler: This material will be measured by the area in square feet (square meters) of the joint filler, of the type and thickness specified, actually installed and accepted.

6.01.05—Basis of Payment: Payment for this work will be made as follows:

1. Concrete: Progress payments may be allowed for completed major labor elements of work such as forming, placing and curing. Prior to placement, the Contractor shall submit a proposed schedule of values for review and approval by the Engineer.

Payment for any lot of concrete allowed to remain in place will be adjusted when the field and laboratory testing of the material is completed. The quantity of concrete in each lot will be a maximum of 75 cubic yards (60 cubic meters). Payment for each lot of concrete will be adjusted based on the results of the Acceptance testing performed by the Engineer.

The following pay factors apply for Standard and Modified Standard Mix classes with regard to entrained air content:

Air Pay Factors

Measured air (%)		Pay factor (%)
4.5 to 7.5		1.00 (100)
4.3 and 4.4	7.6 and 7.7	0.98 (98)
4.1 and 4.2	7.8 and 7.9	0.96 (96)
3.9 and 4.0	8.0 and 8.1	0.94 (94)
3.7 and 3.8	8.2 and 8.3	0.92 (92)
3.5 and 3.6	8.4 and 8.5	0.90 (90)
Concrete lots with less than 3.5% or greater than 8.5% entrained air will be rejected.		

The following pay factors apply for Standard and Modified Standard Mix classes with regard to compressive strength:

Strength Pay Factors

Compressive Strength (%)	Pay factor (%)
95 or greater	1.00 (100)
90 to 94.9	0.95 (95)
85 to 89.9	0.90 (90)
Concrete lots with less than 85% specified strength will be rejected.	

The payment adjustment value for entrained air and 28-day strength for any lot of concrete that is allowed to remain in-place is determined using the formulas below. An index price of $400.00 per c.y. (cu.m) shall be used to calculate each adjustment. The total adjustment value will be the sum of each individual adjustment value and will be deducted from the payment for the appropriate item.

English Units:	Metric Units:
Adjustment (air) = (1 - air pay factor) x $400/c.y. x lot size (c.y.)	Adjustment (air) = (1 - air pay factor) x $400/cu.m x lot size (cu.m)
Adjustment (strength) = (1 - strength pay factor) x $400/c.y. x lot size (c.y.)	Adjustment (strength) = (1 - strength pay factor) x $400/cu.m x lot size (cu.m)
Total Adjustment = Adjustment (air) + Adjustment (strength)	

The Contractor shall request permission from the Engineer to remove and replace a lot(s) of concrete to avoid a negatively adjusted payment. Any replacement material will be sampled, tested and evaluated in accordance with this specification.

No direct payment will be made for any labor, equipment or materials used during the sampling and testing of the concrete for Progression or Acceptance. The cost shall be considered as included in the general cost of the work or as stated elsewhere in the Contract. The work of transporting the concrete test specimens, after initial curing, for Acceptance testing will be performed by the Department without expense to the Contractor.

This material will be paid for at the Contract unit price per cubic yard (cubic meter) less any adjustments, for the specified class or classes, complete in place, which price shall include all materials, equipment, tools, labor and work incidental thereto, including heating, all admixtures, joint sealer, roofing felt and closed cell elastomer, and any miscellaneous materials such as metal flashing and metal used in expansion joints and bearings.

2. Underwater Concrete: When this class of concrete is used, it will be paid for at the Contract unit price per cubic yard (cubic meter) for "Underwater Concrete," complete in place, which price shall include all materials, equipment, tools, labor and work incidental thereto.

3. Joint Filler: Expansion joint filler will be paid for at the Contract unit price per square foot (square meter) for "Joint Filler for Bridges" of the type and thickness specified, complete in place, which price shall include all materials, equipment, tools, labor and work incidental thereto.

Pay Item	Pay Unit
Concrete (Class A, C, F)	c.y. (cu.m)
Underwater Concrete	c.y. (cu.m)
Joint Filler for Bridges (Thickness and Type)	s.f. (s.m.)

CONNECTICUT
SUPPLEMENTAL SPECIFICATION
SECTION 6.03
STRUCTURAL STEEL

Delete the entire section and replace it with the following:

SECTION 6.03
STRUCTURAL STEEL

6.03.01—Description: Work under this item shall consist of furnishing, fabricating, transporting, storing, handling and erecting of structural steel of the type and size designated, as shown on the plans, as directed by the Engineer and in accordance with these Specifications.

All work except as stated in the following paragraph shall conform to the requirements of the AASHTO LRFD Bridge Construction Specifications and the ANSI/AASHTO/AWS D1.5 – Bridge Welding Code.

All work subject to railroad loading shall conform to AREMA and the ANSI/AASHTO/AWS D1.5 – Bridge Welding Code.

6.03.02—Materials: The materials for this work shall conform to the requirements of Section M.06.

Materials for this work shall be stored off the ground before, during, and after fabrication. It shall be kept free from dirt, grease and other contaminants and shall be reasonably protected from corrosion. In addition, weathering steel shall be stored as to allow free drainage and promote the development of the oxide coating and a uniform appearance.

6.03.03—Construction Methods:

1. Pre-qualification:

(a) Fabricators producing material for Department projects under this item are required to have as a minimum, an active AISC Certification for Simple Steel Bridges. For fabrication of material for use on bridges other than un-spliced rolled beam bridges, AISC Major Steel Bridge Certification is required. If so noted on the plans, additional AISC endorsement for fabrication of fracture critical members is also required.

(b) Field Welders: Prior to working on material for Department projects under this Specification, all field welders, field welding operators, and field tackers must possess a valid welder certification card issued by the Department's Division of

Materials Testing. If such person has not been engaged in welding operations on a Department project or project acceptable to the Department within a period of six (6) months, or cannot produce an approved welding certificate dated within the previous twelve (12) months from a welding agency acceptable to the Engineer, the field welder shall be required to re-qualify through examination. The Engineer may require re-qualification of anyone whose quality of work is in question.

2. Submittals:

(a) Shop Drawings: Prior to any fabrication, the Contractor shall submit shop drawings in accordance with Article 1.05.02 to the Engineer for review. Shop drawings shall include a cambering procedure and diagram. In the case of trusses, the Contractor is responsible for calculation of the camber (lengthening and shortening) of all truss members.

(b) Shop Schedule: The Contractor shall submit a detailed shop fabrication schedule to the Engineer for review within 30 days of the Notice to Proceed unless otherwise agreed to by the Engineer. At a minimum the schedule shall include the start date, milestone dates, and completion date. Any significant changes shall be brought to the attention of the Engineer immediately.

(c) Welding Procedures: Prior to start of fabrication, all welding procedures shall be submitted to the Engineer for review.

(d) Working Drawings for Falsework and Erection of Structural Steel: Prior to erecting any steel fabricated under this Specification, the Contractor shall submit drawings and supporting calculations, including erection stresses, in accordance with Article1.05.02 to the Engineer. The design of temporary supports and falsework shall conform to the *AASHTO Specifications,* the *AASHTO Guide Design Specifications for Bridge Temporary Works* or any other standard acceptable to the Engineer. Falsework shall be of sufficient rigidity and strength to safely support all loads imposed and to produce in the finished structure the lines and grades indicated in the Contract.

The working drawings submittal shall include at a minimum:

- Title block with Contract number, Project identification number (PIN), town, and structure number and name.
- Plan of the work area showing support structures, roads, railroad tracks, Federal and State regulated areas as depicted on the plans, utilities or any other information relative to erection.
- A detailed narrative describing the erection sequence for main members and secondary members (cross frames, diaphragms, lateral bracing, portals, etc.), noting use of holding cranes or temporary supports, falsework, or bents.
- Delivery location of each girder.
- Location of each crane for each pick.
- Capacity chart for each crane and boom length used in the work.
- The capacity of the crane and of all lifting and connecting devices shall be adequate for the total pick load including spreaders and other materials. In the area of railroads and navigable waterways, the capacity shall be as

required by Amtrak, Metro North, U.S. Coast Guard or other regulatory authorities. No picks shall be allowed over vehicular or pedestrian traffic unless otherwise noted on the plans or permitted by the Engineer.

- Pick point location(s) on each member.
- Lifting weight of each member including clamps, spreader beams, etc.
- Lift and setting radius for each pick (or maximum lift radius).
- Description of lifting devices or other connecting equipment.
- Girder tie-down details or other method of stabilizing erected girders.
- Bolting requirements, including the minimum number of bolts and erection pins required to stabilize members during the erection sequence.
- Blocking details for stabilizing members supported on expansion bearings and on bearings that do not limit movement in the transverse direction.
- The method and location for temporary supports for field spliced or curved girders, including shoring, false work, holding cranes, guys, etc. The Engineer will review, but not approve details of temporary supports. The design, erection, and stability of these supports shall be the sole responsibility of the Contractor.
- Offsets necessary to adjust expansion bearings during erection to provide for temperature variance and dead load rotation.

The following notes shall be placed on the Erection Drawings:

- Cranes shall be operated in accordance with the Connecticut Department of Public Safety regulations.
- The Contractor shall be responsible for verifying the weight of each lift and for insuring the stability of each member during all phases of erection.
- Members shall be subject to only light drifting to align holes. Any drifting that results in distortion of the member or damage to the holes will be cause for rejection of the member.
- Field reaming of holes shall not be performed unless required by the Contract Drawings or approved by the Engineer.

The Contractor shall submit these documents to the Engineer at least sixty (60) calendar days in advance of their proposed use. If the proposed method of erection requires additional members or modifications to the existing members of the structure, such additions and modifications shall be made by the Contractor at no expense to the State.

3. Shop Fabrication: Unless otherwise shown on the plans or indicated in the Special Provisions, Structural Steel shall be fabricated in accordance with the AASHTO LRFD Bridge Construction Specifications, amended as follows:

(a) Notification: The Contractor shall submit written notification to both the Engineer and the Division Chief (OOC) not less than thirty (30) calendar days prior to start of fabrication. No material shall be manufactured or worked in the shop before the Engineer has been so notified. The notification shall include the name and location of the fabrication shop where the work will be done so that arrangements can be made for an audit of the facility and the assignment of a Department Quality Assurance inspector.

(b) Camber: All members shall be cambered prior to heat curving and painting. Rolled beams shall be heat cambered by methods approved by the Engineer. Plate girders shall be cambered by cutting the web to the prescribed shape with allowances for shrinkage due to cutting, welding, and heat curving. The fabricator is responsible to determine what allowances should be made. Rolled, plate-rolled, or fabricated sections shall be cambered to the total amount shown on the plans and within the camber deviation tolerances permitted for welded beams and girders, as indicated in the ANSI/AASHTO/AWS D1.5 Bridge Welding Code. The Contractor must submit to the Engineer for approval, a plan for corrective action if the actual camber is not within tolerance.

(c) Welding: Unless otherwise indicated in the Contract, all work shall be performed in accordance with ANSI/AASHTO/AWS D1.5 – Bridge Welding Code.

(d) Preassembly of Field Connections: Field connections of main members of continuous beams, plate girders, bents, towers, rigid frames, trusses and arches shall be preassembled prior to erection as necessary to verify the geometry of the completed structure or unit and to verify or prepare field splices. The Contractor shall propose an appropriate method of preassembly for review and comment by the Engineer. he method and details of preassembly shall be consistent with the erection procedures shown on the working drawings and camber diagrams. As a minimum, the preassembly procedure shall consist of assembling three (3) contiguous panels accurately adjusted for line and camber. Successive assemblies shall consist of at least one (1) section or panel of the previous assembly plus two (2) or more sections or panels added at the advancing end. In the case of structures longer than 150 feet (45 meters), each assembly shall not be less than 150 feet (45 meters) long regardless of the length of individual continuous panels or section. All falsework, tools, machinery and appliances, including drift pins and bolts necessary for the expeditious handling of the work shall be provided by the Contractor at no cost to the State.

(e) Inspection: The Contractor shall furnish facilities for the inspection of material and workmanship in the shop by the Engineer. The Engineer and his representative shall be allowed free access to the necessary parts of the premises.

The Engineer will provide Quality Assurance (QA) inspection at the fabrication shop to assure that all applicable Quality Control plans and inspections are adequately adhered to and maintained by the Contractor during all phases of the fabrication. A thorough inspection of a random selection of elements at the fabrication shop may serve as the basis of this assurance.

Prior to shipment to the Project, each individual piece of structural steel shall be stamped or marked in a clear and permanent fashion by a representative of the fabricator's Quality Control (QC) Department to indicate complete final inspection by the fabricator and conformance to the Project specifications for that piece. The stamp or mark must be dated. A Materials Certificate in accordance with Article 1.06.07 may be used in lieu of individual stamps or markings, for all material in a

single shipment. The Materials Certificate must list each piece within the shipment and accompany the shipment to the Project Site.

Following the final inspection by the fabricator's QC personnel, the Engineer may select pieces of structural steel for re-inspection by the Department's QA inspector. Should non-conforming pieces be identified, all similar pieces must be re-inspected by the fabricator and repair procedure(s) submitted to the Engineer for approval. Repairs will be made at the Contractor's expense.

The pieces selected for re-inspection and found to be in conformance, or adequately repaired pieces, may be stamped or marked by the QA inspector. Such markings indicate the Engineer takes no exception to the pieces being sent to the Project Site. Such marking does not indicate acceptance or approval of the material by the Engineer.

Following delivery to the Project Site, the Engineer will perform a visual inspection of all material to verify shipping documents, fabricator markings, and that there was no damage to the material or coatings during transportation and handling.

The Engineer is not responsible for approving or accepting any fabricated materials prior to final erection and assembly at the Project Site.

(f) Nondestructive Testing: All nondestructive testing of structural steel and welding shall be performed as designated in the plans and specifications. Such testing shall be performed by personnel approved by the Engineer.

Personnel performing Radiographic, Ultrasonic or Magnetic Particle testing shall be certified as a NDT Level II technician in accordance with the American Society for Non Destructive Testing (ASNT), Recommended Practice SNT-TC-1A.

Nondestructive testing shall be performed in accordance with the procedures and standards set forth in the AASHTO/AWS D1.5, Bridge Welding Code. The Department reserves the right to perform additional testing as determined by the Engineer.

All nondestructive testing shall be witnessed by an authorized representative of the Department. Certified reports of all tests shall be submitted to the Division of Materials Testing for examination. Each certified report shall identify the structure, member, and location of weld or welds tested. Each report shall also list the length and location of any defective welds and include information on the corrective action taken and results of all retests of repaired welds.

Should the Engineer require nondestructive testing on welds not designated in the Contract, the cost of such inspection shall be borne by the Contractor if the testing indicates that any weld is defective. If the testing indicates the weld to be satisfactory, the actual cost of such inspection will be paid for by the Department.

(g) Marking: Each member shall be identified with an erection mark corresponding with the member identification mark on the approved shop drawings. Identification marks shall be impressed into the member with a low stress stamp in a location in accordance with standard industry practice.

(h) Shipping, Handling, Storage and Receiving: The Contractor shall make all arrangements necessary to properly load, transport, unload, handle and store all material. The Contractor shall furnish to the Engineer copies of all shipping statements. The weight (mass) of the individual members shall be shown on the statements. Members having a weight (mass) of more than 3 tons (2700 kilograms) shall have the weight (mass) marked thereon. All material shall be unloaded promptly upon delivery. The Contractor shall be responsible for any demurrage charges. Damage to any material during transportation, improper storage, faulty erection, or undocumented fabrication errors may be cause for rejection of said material at the Project Site. Top lateral bracing shall be installed in tub girders prior to shipping and erection of the field pieces. All costs associated with any corrective action will be borne by the Contractor.

4. Field Erection: A meeting shall be held on Site prior to any erection of structural steel. The Contractor shall name the person responsible for the steel erection work and provide copies of all crane operator licenses. Proposed equipment, rigging, timetable and methods shall be proposed at this meeting.

(a) Falsework: Any temporary work shall be constructed in conformance with the working drawings. The Contractor shall verify that the quality of materials and work employed are consistent with their design.

All girders shall be stabilized with falsework, temporary braces, or holding cranes until a sufficient number of adjacent girders are erected with all diaphragms and cross frames connected to provide necessary lateral support as shown in the erecting diagrams.

Adjustment shall be provided in the falsework and other temporary supports so that the temporary elevation of the structural steel provided by the falsework is consistent with the deflections that will occur as the structure is completed. The elevation of falsework shall be such as to support the girders at the cambered no-load elevation. Unloading of temporary supports shall be performed such that all temporary supports at each cross section are unloaded uniformly. Unless specifically permitted by the Engineer, welding of falsework support brackets to structural steel is not allowed.

Unless erected by the cantilever method, truss spans shall be erected on blocking. The blocking shall be left in place until the tension chord splices are fully bolted and all other truss connections pinned and bolted and the proper geometric shape is achieved.

(b) Anchorages: Anchor bolts and similar materials which are to be placed during the erection of the structural steel shall be carefully and accurately set to the requirements of Article 6.01.03.

(c) Bearings: Bearing plates shall have a full and uniform bearing upon the substructure masonry. Bearing plates shall be placed upon bearing areas which are finished according to the requirements of Article 6.01.03.

Prefabricated pads conforming to the requirements of Article M.12.01 shall be installed unless specifically noted otherwise in the Contract plans.

Each piece shall be the same size as the bearing plate it is to support and the holes to accommodate the anchor bolts shall be clearly and accurately punched before setting the pad in place.

In placing expansion bearings, due consideration shall be given to the temperature at the time of erection and stage construction requirements. The nuts of anchor bolts at expansion bearings shall be adjusted to permit the free movement of the span.

(d) Field Assembly: Members and components shall be accurately assembled as shown on the plans and any match marks shall be followed. The material shall be carefully handled so that no components will be bent, broken or otherwise damaged.

Hammering which will injure or distort the members is not permitted. Bearing surfaces and surfaces to be in permanent contact shall be cleaned before the members are assembled.

Cylindrical erection pins shall be 1/32 inch (0.8 mm) larger than the nominal diameter of the holes.

Splices and field connections of main stress carrying members shall be made with a minimum of fifty percent (50%) of the holes filled and tightened with high strength bolts before the lifting system is released. The bolts shall be installed uniformly throughout the connection. Lateral stability must be maintained until the deck is placed.

The Contractor shall ensure that girders are stable throughout the erection process. The stage of completeness of the bolted connections shall be considered when evaluating the strength and stability of the steel during erection. For Closed Box and Tub Girders the Contractor shall ensure that the cross-section shape of each box is maintained during erection. Top lateral bracing shall be installed in tub girders prior to shipping and erection of the field pieces.

(e) Welded Connections: Unless otherwise shown on the plans or indicated by the special provisions, welding of structural steel shall be done in accordance with "ANSI/AASHTO/AWS D1.5 Bridge Welding Code."

The Contractor's welding and inspection procedures for each type of field weld and field tacking must be submitted to the Engineer on the form designated by the Department. All procedures must be approved by the Division of Materials Testing prior to any work and must be adhered to at all times.

Quality control is the responsibility of the Contractor. The Contractor must provide an AWS Certified Welding Inspector (CWI) in accordance with AWS D1.5. The CWI must be qualified and certified in accordance with the provisions of AWS QC1, *Standard for Qualification and Certification of Welding Inspectors.*

The CWI shall make visual inspection of all welds. The Contractor shall perform magnetic particle inspection, ultrasonic testing inspection, or radiographic testing inspection of field welds when required in the plans or special provisions. Each test may be witnessed by an authorized representative of the Engineer.

Welds or sections of welds containing imperfections determined to be unacceptable by either the CWI or the Engineer shall be removed and re-welded by the Contractor at their expense. Welds so removed and replaced shall be re-inspected by the CWI. All costs for re-inspection or testing of such welds shall be borne by the Contractor.

(f) High Strength Bolted Connections: The assembly of structural connections using ASTM A 325/ A 325M or ASTM A 490/A 490M high-strength bolts shall be installed so as to develop the minimum required bolt tension specified in Table A. The Manufacturer's certified test report, including the rotational capacity test results, **must** accompany the fastener assemblies. Fastener assemblies delivered without the certified reports will be rejected.

Bolts, nuts and washers from each rotational-capacity lot shall be shipped in the same container. If there is only one production lot number for each size of nut and washer, the nuts and washers may be shipped in separate containers. Each container shall be permanently marked with the rotational-capacity lot number such that identification will be possible at any stage prior to installation. Assemblies of bolts, nuts and washers shall be installed from the same rotational-capacity lot. Pins, small parts and packages of bolts, washers, and nuts shall be shipped in boxes, crates, kegs, or barrels. A list and description of the contained materials shall be plainly marked on the outside of each shipping container.

Bolted Parts: All material within the grip of the bolt shall be steel; there shall be no compressible material, such as gaskets or insulation, within the grip. Bolted steel shall fit solidly together after the bolts are tensioned. The length of the bolts shall be such that the end of the bolt will be flush with or outside of the face of the nut when properly installed.

Surface Conditions: At the time of assembly, all connection surfaces, including surfaces adjacent to the bolt head and nut, shall be free of scale, except tight mill scale, and shall be free of dirt or other foreign material. Burrs that would prevent solid seating of the connected parts in the snug tight condition shall be removed.

Paint is permitted on the faying surface, including slip critical connections, only when shown on the plans. The faying surfaces of slip-critical connections shall meet the requirements of the following paragraphs, as applicable:

- Connections specified to have un-coated faying surfaces: any paint, including any inadvertent over spray, shall be excluded from areas closer than one (1) bolt diameter, but not less than 1.0 in (25 mm), from the edge of any hole and all areas within the bolt pattern.

- Connections specified to have painted faying surfaces shall be blast cleaned and coated in accordance with the Contract, and shall not be assembled until the coating system has been properly cured.

- Connections specified to have galvanized faying surfaces shall be hot-dip galvanized in accordance with ASTM A 123/A 123M, and shall subsequently be roughened by means of hand wire brushing. Power wire brushing is not permitted.

Installation: At the pre-erection meeting, the Contractor shall inform the Engineer of its planned method of tensioning high strength bolts. Acceptable methods are: Turn-of-Nut, Calibrated Wrench or Direct Tension Indicator.

Fastener Assemblies: A "fastener assembly" is defined as a bolt, a nut, and a washer. Only complete fastener assemblies of appropriately assigned lot numbers shall be installed.

Fastener assemblies shall be stored in an area protected from dirt and moisture. Only as many fastener assemblies as are anticipated to be installed and tensioned during a work shift shall be taken from protected storage. Fastener assemblies not used shall be returned to protected storage at the end of the shift. Prior to installation, fastener assemblies shall not be cleaned of lubricant. Fastener assemblies which accumulate rust or dirt resulting from site conditions shall be cleaned, relubricated and tested for rotational-capacity prior to installation. All galvanized nuts shall be lubricated with a lubricant containing a visible dye. Plain bolts must be oily to the touch when delivered and installed. Lubricant shall be removed prior to painting.

All bolts shall have a hardened washer under the turned element (nut or bolt head). All hardened washers shall conform to the requirements of ASTM F 436/F 436M.

Where necessary, washers may be clipped on one side to a point not closer than 7/8 of the bolt diameter from the center of the washer. Circular and beveled washers, when used adjacent to direct tension indicator washers shall not be clipped. Direct tension indicator washers shall not be clipped.

Bolt Tension Measuring Device: The Contractor shall provide a calibrated bolt tension measuring device (a Skidmore-Wilhelm calibrator (Skidmore) or other acceptable bolt tension indicating device) at all times when, and at all locations where high-strength fasteners are being installed and tensioned. The tension measuring device (Skidmore) shall be calibrated by an approved testing agency at least annually. The Skidmore shall be used to perform the rotational-capacity test of the fastener assemblies. The Skidmore will also be used to substantiate (1) the suitability of the fastener assembly to satisfy the requirements of Table A, including lubrication as required, (2) calibration of the installation wrenches, if applicable, and (3) the

understanding and proper use by the Contractor of the selected method of tensioning to be used.

Complete fastener assemblies shall be installed in properly aligned holes and then tensioned by the Turn-of-Nut, Calibrated Wrench or Direct Tension Indicator method to the minimum tension specified in Table A. Tensioning may be done by turning the bolt while the nut is prevented from rotating when it is impractical to turn the nut. Impact wrenches, if used, shall be of adequate capacity and sufficiently supplied with air to perform the required tensioning of each bolt in approximately ten (10) seconds.

Bolts shall be installed in all holes of the connection and the connection brought to a snug condition. Snug is defined as having all the plies of the connection in firm contact. Snugging shall progress systematically from the most rigid part of the connection to the free edges. The bolts of the connection shall then be tightened in a similar manner as necessary until the connection is properly tensioned.

Nuts shall be located, whenever practical, on the side of the connection which will not be visible from the traveled way.

Unless otherwise approved by the Engineer fastener assemblies shall be brought to full tension immediately following snugging.

Fully tensioned fastener assemblies shall not be reused. Retightening previously tensioned bolts which may have been loosened by the tensioning of adjacent bolts shall not be considered as reuse.

Rotational-Capacity Tests: In addition to the certified test reports, on site Rotational-capacity tests may be required by the Engineer. This test shall be performed by the Contractor at the location where the fasteners are installed and tensioned. When performed in the field, the procedure shall conform to the requirements of ASTM A 325/ A 325M Appendix A-1.

Turn-of-Nut Installation Method: At the start of the work, the Contractor shall demonstrate that the procedure used by the bolting crew to develop a snug condition and to control the turns from a snug condition develops the tension required in Table A. To verify their procedure, the Contractor shall test a representative sample of not less than three complete fastener assemblies of each diameter, length and grade to be used in the work. This shall be performed at the start of work using a Skidmore. Periodic retesting shall be performed when ordered by the Engineer.

After snugging the connection, the applicable amount of rotation specified in Table B shall be achieved. During the tensioning operation there shall be no rotation of the part not turned by the wrench. Tensioning shall progress systematically from the most rigid part of the connection to its free edges.

Calibrated Wrench Installation Method: Calibrated wrench method may be used only when the installation wrenches are properly calibrated daily, or as determined by the Engineer. Standard torques determined from tables or from formulas which are assumed to relate torque to tension **shall not** be acceptable.

The Contractor shall demonstrate to the Engineer periodically that all equipment and wrenches are providing a torque which has been calibrated to produce the minimum tension specified in Table A. The installation procedures shall be verified periodically, as determined by the Engineer, for each bolt diameter, length and grade using the fastener assemblies that are being installed in the work. This verification testing shall be accomplished in a Skidmore by tensioning three (3) complete fastener assemblies of each diameter, length and grade from those being installed with a hardened washer under the element turned.

When significant difference is noted in the surface condition of the bolts, threads, nuts or washers, as determined by the Engineer, wrenches shall be recalibrated. The Contractor shall verify during the installation of the assembled steel work that the wrench adjustment selected by the calibration does not produce a nut or bolt head rotation from snug greater than that permitted in Table B. If manual torque wrenches are used, nuts shall be turned in the tensioning direction when torque is measured.

When calibrated wrenches are used to install and tension bolts in a connection, bolts shall be installed with hardened washers under the element turned to tension the bolts. Once the connection has been snugged, the bolts shall be tensioned using the calibrated wrench. Tensioning shall progress systematically from the most rigid part of the connection to its free edges. A calibrated torque wrench shall be used to "touch up" previously tensioned bolts which may have been relaxed as a result of the subsequent tensioning of adjacent bolts until all bolts are tensioned to the prescribed amount.

Direct Tension Indicator Installation Method: When Direct Tension Indicators (DTIs) meeting the requirements of Section M.06 are used with high-strength bolts to indicate bolt tension, they shall be subjected to the verification testing described below and installed in accordance with the method specified below. Unless otherwise approved by the Engineer, the DTIs shall be installed under the head of the bolt and the nut turned to tension the bolt. The Manufacturer's recommendations shall be followed for the proper orientation of the DTI and additional washers, if any, required for the correct use of the DTI. Installation of a DTI under the turned element may be permitted if a washer is used to separate the turned element from the DTI.

Verification: Verification testing shall be performed in a Skidmore. A special flat insert shall be used in place of the normal bolt head holding insert. Three verification tests shall be required for each combination of fastener assembly rotational-capacity lot, DTI lot, and DTI position relative to the turned element (bolt head or nut) to be used on the Project. The fastener assembly shall be installed in the tension-measuring device with the DTI located in the same position as in the work. The element intended to be stationary (bolt or nut) shall be restrained from rotation.

The verification tests shall be conducted in two stages. The bolt nut and DTI assembly shall be installed in a manner so that at least three (3) and preferably not more than five (5) threads are located between the bearing face of the nut and the bolt head. The bolt shall be tensioned first to the load equal to that listed in Table C under Verification Tension for the grade and diameter of the bolt. If an impact wrench is used, the tension developed using the impact wrench shall be no more than two-thirds (2/3) of the required tension. Subsequently, a manual wrench shall be used to attain the required tension. The number of refusals of the 0.005 in (0.125 mm) tapered feeler gage in the spaces between the protrusions shall be recorded. The number of refusals for uncoated DTIs under the stationary or turned element, or coated DTIs under the stationary element, shall not exceed the number listed under Maximum Verification Refusals in Table C for the grade and diameter of bolt used. The maximum number of verification refusals for coated DTIs (galvanized, painted, or epoxy-coated), when used under the turned element, shall be no more than the number of spaces on the DTI less one. The DTI lot shall be rejected if the number of refusals exceeds the values in the table or, for coated DTIs if the gage is refused in all spaces.

After the number of refusals is recorded at the verification load, the bolt shall be further tensioned until the 0.005 in (0.125 mm) feeler gage is refused at all the spaces and a visible gap exists in at least one space. The load at this condition shall be recorded and the bolt removed from the tension-measuring device. The nut shall be able to be run down by hand for the complete thread length of the bolt excluding thread run-out. If the nut cannot be run down for this thread length, the DTI lot shall be rejected unless the load recorded is less than ninety-five percent (95%) of the average load measured in the rotational capacity test of the fastener lot as specified previously in “Rotational-Capacity Tests.”

If the bolt is too short to be tested in the calibration device, the DTI lot shall be verified on a long bolt in a calibrator to determine the number of refusals at the verification tension listed in Table C. The number of refusals shall not exceed the values listed under maximum verification refusals in Table C. Another DTI from the same lot shall then be verified with the short bolt in a convenient hole in the work. The bolt shall be tensioned until the 0.005 in. (0.125 mm) feeler gage is refused in all spaces and a visible gap exists in at least one space. The bolt shall then be removed from the tension-measuring device and the nut shall be able to be run down by hand for the complete thread length of the bolt excluding thread run-out. The DTI lot shall be rejected if the nut cannot be run down this thread length.

Installation: Installation of fastener assemblies using DTIs shall be performed in two stages. The stationary element shall be held against rotation during each stage of the installation. The connection shall be first snugged with bolts installed in all holes of the connection and tensioned sufficiently to bring all the plies of the connection into firm contact. The number of spaces in which a 0.005 in (0.125 mm) feeler gage is refused in the DTI after snugging shall not exceed those listed under Maximum Verification Refusals in Table C. If the number exceeds the values in the table, the fastener assembly shall be removed and another DTI installed and snugged.

For uncoated DTIs used under a stationary or turned element and for coated DTIs used under a stationary element, the bolts shall be further tensioned until the number of refusals of the 0.005 in. (0.125 mm) feeler gage shall be equal or greater than the number listed under Minimum Installation Refusals in Table C. If the bolt is tensioned so that no visible gap in any space remains, the bolt and DTI shall be removed and replaced by a new properly tensioned bolt and DTI.

When coated DTIs (galvanized, painted or epoxy coated) are used under a turned element, the 0.005 in (0.125 mm) feeler gage shall be refused in all spaces.

Inspection: The Contractor shall provide all the material, equipment, tools and labor necessary for the inspection of the bolted connections. Access to the bolted parts and fastener assemblies, both before and after the fasteners are installed and tensioned, shall be provided.

The Contractor is responsible for Quality Control (QC). The Contractor shall review this Specification with its project personnel prior to performing the work. The Contractor shall verify the proper markings, surface conditions and storage of fastener assemblies. The Contractor shall inspect the faying surfaces of connections for compliance with the plans and specifications. The Contractor shall provide to the Engineer a copy of their written QC Report for each shift of the calibration or verification testing specified. This Report shall confirm that the selected procedure is properly used and that the fastener assemblies installed meet the tensions specified in Table A. The Contractor shall monitor the installation of fasteners in the work to assure that the selected procedure, as demonstrated in the initial testing to provide the specified tension, is routinely and properly applied.

The Contractor, in the presence of the Engineer, shall inspect the tensioned bolts using an inspection torque wrench, as defined below. If DTI devices are used, the appropriate feeler gauge will be used. Inspection tests shall be performed within 24 hours of bolt tensioning to prevent possible loss of lubrication or corrosion influence on tensioning torque.

The inspection torque wrench shall be calibrated as follows: Three (3) bolts of the same grade, size, and condition as those under inspection shall be placed individually in a device calibrated to measure bolt tension. This calibration operation shall be done at least once each inspection day. There shall be a washer under the part turned in torqueing each bolt. In the calibrated device, each bolt shall be tightened by any convenient means to the specified tension. The inspection wrench shall then be applied to the tensioned bolt to determine the torque required to turn the nut or head five degrees (5°) in the tightening direction. The average of the torque required for all three (3) bolts shall be defined as the job-inspection torque.

Twenty-five percent (25%), but a minimum of two (2), of the tensioned bolts shall be selected by the Engineer for inspection in each connection. (The Engineer may reduce the number of bolts tested at a connection to ten percent (10%) based on the Contractor's past performance and splice location.) The job-inspection torque shall then be applied to each selected assembly with the inspection torque wrench turned in

the tightening direction. If all inspected bolt heads or nuts do not turn, the bolts in the connection shall be considered to be properly tensioned. If the torque turns one or more bolt heads or nuts, the job-inspection torque shall then be applied to **all** bolts in the connection or to the satisfaction of the Engineer. Any bolt whose head or nut turns shall be re-tensioned and re-inspected. The Contractor may, however, re-tension all the bolts in the connection with the inspection torque wrench and resubmit it for inspection, so long as the bolts are not over-tensioned or damaged by this action.

(g) Field Corrections and Misfits: Reaming of bolt holes during erection shall be permitted only with approval of the Engineer. No excessive forces shall be applied to any member to provide for proper alignment of the bolt holes.

The correction of minor misfits involving minor amounts of reaming, cutting, grinding and chipping shall be considered a legitimate part of the erection. However, any error in the shop fabrication or deformation resulting from handling and transportation may be cause for rejection. The Contractor shall be responsible for all misfits, errors and damage and shall make the necessary corrections and replacements.

Table A (English)
Minimum Bolt Tension in kips*

Bolt Size (Inches)	ASTM A 325	ASTM A 490
5/8	19	24
¾	28	35
7/8	39	49
1	51	64
11/8	56	80
1¼	71	102
13/8	85	121
1½	103	148

*Equal to 70% of specified minimum tensile strength of bolts (as specified in ASTM Specifications for tests of full-size A 325 and A 490 bolts with UNC threads, loaded in axial tension) rounded to the nearest kip.

TABLE A (Metric)
Minimum Bolt Tension in Kilonewtons*

Bolt Size	ASTM A 325M	ASTM A 490M
M16	91	114
M20	142	179
M22	176	221
M24	205	257
M27	267	334
M30	326	408
M36	475	595

*Equal to 70% of specified minimum tensile strength of bolts (as specified in ASTM Specifications for tests of full-size A 325M and A 490M bolts with metric coarse threads series ANSI B1.13M, loaded in axial tension) rounded to the nearest kilonewton.

TABLE B (English and Metric)
Nut Rotation from the Snug Condition
Geometry[a,b,c] of Outer Faces of Bolted Parts

Bolt Length (measured from underside of head to end of bolt)	Both Faces Normal to Bolt Axis	One Face Normal to Bolt Axis and Other Face Sloped Not More Than 1:20, Bevel Washer Not Used	Both Faces Sloped Not More Than 1:20 From Normal to Bolt Axis, Bevel Washer Not Used
Up to and including 4 diameters	1/3 turn	1/2 turn	2/3 turn
Over 4 diameters but not exceeding 8 diameters	1/2 turn	2/3 turn	5/6 turn
Over 8 diameters but not exceeding 12 diameters	2/3 turn	5/6 turn	1 turn

(a) Nut rotation, as used in Table B, shall be taken as relative to the bolt, regardless of the element (nut or bolt) being turned. For bolts installed by 1/2 turn and less, the tolerance should be plus or minus 30 degrees; for bolts installed by 2/3 turn and more, the tolerance should be plus or minus 45 degrees.

To determine the nut rotation for installation and inspection of the fasteners, the nut and the end of the bolt or the head of the bolt and the adjacent steel shall be match marked.

(b) The values, given in Table B, shall be applicable only to connections in which all material within grip of the bolt is steel.

(c) No research work has been performed by the Research Council on Riveted and Bolted Structural Joints to establish the turn-of-nut procedure when bolt lengths exceed 12 diameters. For situations in which the bolt length, measured from the underside of the head to the end of the bolt, exceeds 12 diameters, the required rotation shall be determined by actual tests in a suitable tension device simulating the actual conditions.

TABLE C (English)

Bolt Dia. (in.)	Verification Tension		Maximum Verification Refusals		DTI Spaces		Minimum Installation Refusals	
	A325	A490	325	490	325	490	325	490
5/8	20	25	1	2	4	5	2	3
¾	29	37	2	2	5	6	3	3
7/8	41	51	2	2	5	6	3	3
1	54	67	2	3	6	7	3	4
1 1/8	59	84	2	3	6	7	3	4
1¼	75	107	3	3	7	8	4	4
1 3/8	89	127	3	3	7	8	4	4
1½	108	155	3	4	8	9	4	5

TABLE C (Metric)

Bolt Dia. (in.)	Verification Tension		Maximum Verification Refusals		DTI Spaces		Minimum Installation Refusals	
	A325	A490	Type 8.8	Type 10.9	Type 8.8	Type 10.9	Type 8.8	Type 10.9
M16	96	120	1	1	4	4	2	2
M20	149	188	2	2	5	6	3	3
M22	185	232	2	2	5	6	3	3
M24	215	270	2	2	5	6	3	3
M27	280	351	2	3	6	7	3	4
M30	342	428	3	3	7	8	4	4
M36	499	625	3	4	8	9	4	5

6.03.04—Method of Measurement: Payment under this item will be at the Contract lump sum price per each complete bridge structure or shall be based on the net weight (mass) of metal in the fabricated structure, whichever method appears on the bid proposal form.

When payment is on a lump sum basis, the work, including anchor bolts, steel bearings and plates will not be measured for payment. Bearing plates welded to the girder are included in the price of the structural steel and bearing plates bonded to the bearings are included in the price of the bearing.

When payment is based on the net weight (mass) of metal in the fabricated structure, it shall be computed as described below.

The weight (mass) of the metal works to be paid for under the item of structural steel shall be computed on the basis of the net finished dimensions of the parts as shown on the shop drawings, deducting for copes, cuts, clips and all open holes, except bolt holes, and on the following basis:

1. The weights (masses) of rolled shapes shall be computed on the basis of their nominal weights (masses) per foot (meter), as shown in the shop drawings or listed in handbooks.

The weight (mass) of plates shall be computed on the basis of the nominal weight (mass) for their width and thickness as shown on the shop drawings.

2. The weight (mass) of temporary erection bolts, shop and field paint, galvanization, boxes, crates and other containers used for shipping, and materials used for supporting members during transportation and erection, shall not be included.

3. The weight (mass) of all high strength bolts, nuts, and washers shall be included on the basis of the following weights (masses):

Weight per 100 pieces			
English units		Metric units	
Nominal diameter of H.S. bolt (inch)	**Bolthead, nut, 1 washer and stick through (lbs)**	**Nominal diameter of H.S. bolt (mm)**	**Bolthead, nut, 1 washer and stick through (kg)**
1/2	22	16	17
5/8	33	20	26
3/4	55	22	39
7/8	84	24	50
1	120	27	60
1 1/8	169	30	73
1 1/4	216	36	122

4. The weight (mass) of weld metal shall be computed on the basis of the theoretical volume from plan dimensions of the welds.

Size of fillet in Inches (mm)		**Weight of weld in pounds per foot (kg per meter)**	
3/16	(5)	0.08	(0.119)
¼	(6)	0.14	(0.208)
5/16	(8)	0.22	(0.327)
3/8	(9.5)	0.30	(0.446)
½	(13)	0.55	(0.818)
5/8	(16)	0.80	(1.190)
¾	(19)	1.10	(1.636)
7/8	(22)	1.50	(2.231)
1	(25)	2.00	(2.974)

5. The weight (mass) of steel shims, filler plates and anchor bolts shall be measured for payment.

6.03.05—Basis of Payment: The structural steel, incorporated in the completed and accepted structure, will be paid for at the Contract lump sum price for "Structural Steel (Site No.)," or at the Contract unit price per hundredweight (kilogram) for "Structural Steel," whichever is indicated in the Contract.

Payment for either method shall be for structural steel, complete in place, which price shall include quality control, furnishing, fabricating, transporting, storage and handling, erecting, welding, surface preparation and all materials including fastener assemblies, steel bearing assemblies and anchor bolts, equipment, tools and labor incidental thereto.

The cost of the raw material is included in the lump sum payment for “Structural Steel (Site No.).” All remaining work including, but not limited to, preparation of shop drawings, fabricating, transporting, storage and handling, erecting, surface preparation and all materials, equipment, tools and labor incidental thereto, will be paid for under “Structural Steel (Site No.).”

No direct payment will be made for setting anchor bolts, preparing bearing areas, furnishing and placing materials under bearings. No direct payment will be made for non destructive testing as shown on the plans.

Pay Item	Pay Unit
Structural Steel (Site No.)	l.s. (l.s.)
Structural Steel	cwt. (kg)

CONNECTICUT
SUPPLEMENTAL SPECIFICATION
SECTION 6.12
CONCRETE CYLINDER CURING BOX

Delete the entire section and replace with it the following:

6.12.01 –Description: This item shall consist of furnishing a box for curing concrete test cylinders. The box shall be commercially available and manufactured specifically for curing concrete test cylinders. The box will remain the property of the Contractor at the conclusion of the project. The box shall be delivered to a location on the project as directed by the Engineer.

6.12.02 – Materials: A catalog cut listing detailed specifications of the box and operating instructions from the manufacturer must be submitted to the Engineer. The box and its components shall be constructed of non-corroding materials and shall be capable of storing a minimum of 18 test cylinders, 6” X 12” (152 mm X 305 mm) stored vertically with the lid closed. The lid must be watertight when closed and hinged in the back with security latches on the front that can be padlocked. The box must be capable of holding water to a maximum level of one inch above test cylinders placed in the box vertically. A drain hole must be provided in a wall of the box to allow manual drainage of the water that exceeds this level. A drain hole must also be provided at the bottom of the box so that it can be manually emptied. The temperature of the water must be controlled by heating and cooling device capable of maintaining the temperature of the water within a range of 60 to 80º F, +/- 2 ºF (15.5 to 26.7 ºC, +/- 1 ºC) within an outside ambient air temperature range of -10 to 120 º F (-23.3 to 49 ºC). The heating and cooling device must be positioned to allow free circulation of air and water around the cylinders and be rated at 120 volts and 15 amps. A rack must be provided within the box to support the cylinders above the pool of temperature controlled water. The device must be thermostatically controlled with a digital readout that is capable of displaying the high/low water temperature within the box since the last reading was taken.

6.12.03 - Construction Methods: The Contractor shall maintain the curing box in working order and shall provide all necessary electrical service and water so that the curing box can be used properly during the entire course of the project. Any curing box that is not operating properly, as determined by the Engineer, shall be replaced within 24 hours by the Contractor at no expense to the State. The Engineer reserves the right to prohibit placement of fresh concrete on the project until a curing box acceptable to the Engineer is operational on the project site.

6.12.04 - Method of Measurement: The furnishing of the concrete test cylinder curing box will be measured for payment by the number of boxes delivered by the Contractor and accepted by the Engineer.

6.12.05 – Basis of Payment: This item will be paid for at the contract unit price each for "Concrete Cylinder Curing Box" ordered and accepted on the project, which price shall include all submittals, material, tools, equipment, and labor incidental thereto. The price shall also include all maintenance and operating costs related to the curing box for the duration of the project.

Pay Item	Pay Unit
Concrete Cylinder Curing Box	ea. (ea.)

CONNECTICUT
SUPPLEMENTAL SPECIFICATION
SECTION 6.51
CULVERTS

6.51.02 – Materials:

Delete the 2nd paragraph, "Pipes of the type indicated ... of Article M.02.01." and insert the following paragraph:

"Pipes of the type indicated on the plans and joint sealant shall conform to the requirements of Article M.08.01. Bedding material shall conform to the requirements of Article M.08.03. Granular fill shall conform to the requirements of Article M.02.01."

6.51.03 – Construction Methods:

In the 8th paragraph replace "gravel fill" with "granular fill".

Delete the 13th paragraph, "Bituminous fiber and … as the pipe."

6.51.04 – Methods of Measurement:

In the 7th paragraph, replace "Gravel Fill" with "Granular Fill".

6.51.05 – Basis of Payment:

In the 8th paragraph, replace "Gravel Fill" with "Granular Fill".

CONNECTICUT
SUPPLEMENTAL SPECIFICATION
SECTION 7.01
DRILLED SHAFTS

Add the following section:

SECTION 7.01
DRILLED SHAFTS

7.01.01 – Description
7.01.02 – Materials
7.01.03 – Construction Methods
7.01.04 – Method of Measurement
7.01.05 – Basis of Payment

7.01.01 - Description: This work shall consist of all labor, materials, equipment and services necessary to complete the Drilled Shaft installation in accordance with the Contract. Drilled shafts shall be made primarily of reinforced or unreinforced concrete.

7.01.02 - Materials: Drilled Shafts shall be made of the following materials:

1. **Portland Cement Concrete:** Concrete used in the construction of the shaft shall conform to the plans, Section M.03, and to the following:

   (a) The concrete shall have a minimum initial slump of 8 in (200 mm).

   (b) The concrete mix shall maintain a slump of no less than 4 in (100 mm) for a minimum of three (3) hours beyond the expected time for placement of concrete and removal of temporary casing (if used), as indicated by trial mixes and physical tests of slump loss. The trial mix and physical tests (slump loss tests) shall be conducted using concrete mix and ambient air temperatures anticipated during concrete placement.

   (c) All admixtures, if approved for use, shall be adjusted for the conditions encountered on the job so as to conform to the slump loss requirements within this specification and must not adversely affect the timing of, taking of or interpretation of any Nondestructive Testing that may be called for in the Contract.

   (d) Coarse aggregate shall conform to Article M.01.01, No. 8 Gradation.

2. **Reinforcing Steel**: Reinforcing steel used in construction of the shaft shall conform to Article M.06.01.

3. **Access Tubes:** Access tubes for cross-hole acoustic logging shall be made of Schedule 40 steel pipe conforming to ASTM A 53, Grade A or B, Type E, F, or S. The tubes' inside diameter shall be at least 1.5 in (38 mm). All access tubes, including all pipe joints, shall

have a round, regular inside surface free of defects and obstructions, in order to permit the free, unobstructed passage of probes to the bottoms of the tubes. The access tubes shall be watertight, free from corrosion and free of deleterious material on the outside that could prevent bonding with the concrete. All access tubes shall be fitted with watertight caps on the bottom and top.

4. **Grout:** Grout used for filling Access Tubes shall meet the requirements of Article M.03.05. The grout shall have strength properties equivalent to or better than those of the drilled shaft concrete.

5. **Permanent Casing:** Steel casing shall conform to the requirements of ASTM A36 or A252 Grade 2 unless otherwise specified on the plans. Casings shall be smooth, clean, watertight, and of ample strength to withstand handling, installation, and the pressure from surrounding concrete and earth materials. The outside diameter of any casing shall not be less than the specified diameter of the shaft.

7.01.03 - Construction Methods:

1. **Qualifications of Drilled Shaft Contractor and Submittals:** The Contractor performing the work described in this specification shall have been installing drilled shafts of both diameter and length similar to those shown on the plans for a minimum of three (3) years prior to the bid date for this Project. The Contractor shall submit a list of projects that it has performed in said three (3) years that met these criteria. The list of projects shall contain names and phone numbers of owner's representatives who can verify the Contractors' participation on those projects, and that they met said criteria.

   As early as possible, and no later than thirty (30) days prior to constructing drilled shafts, the Contractor shall submit to the Engineer an Installation Plan for the shafts. This Plan shall provide the following information:

   (a) A list identifying the intended on-Site supervisor(s) and drill operator(s), for approval by the Engineer. The on-Site supervisor(s) shall have a minimum of two (2) years' experience supervising the construction of drilled shafts of a diameter and length similar to those shown on the plans. The drill operator(s) shall have a minimum of one (1) years' experience drilling for the construction of drilled shafts of a diameter and length similar to those shown on the plans. The list shall contain a summary of each individual's experience.

   Should the Contractor elect to change any of these intended personnel during construction of the shafts, this same approval process will need to be completed for the new personnel prior to their starting work on the Project. The Contractor shall not be compensated for any delays resulting from such changing of personnel.

   (b) List of proposed equipment to be used, including cranes, drills, augers, bailing buckets, final cleaning equipment, desanding equipment, slurry pumps, core sampling equipment, tremies or concrete pumps, casing and any other equipment required for construction of the shafts.

   (c) Details of overall construction operation sequence and the sequence of shaft

construction in bents or groups.

(d) Details of the Contractor's intended shaft excavation methods.

(e) When the use of slurry is anticipated, details of the mix design and its suitability for the subsurface conditions at the Site, mixing and storage methods, maintenance methods, and disposal procedures.

(f) Details of methods for cleaning the shaft excavation.

(g) Details of reinforcement placement, including support and centralization methods.

(h) Details of concrete mix design and test results of both a trial mix and a slump loss test. The tests shall be conducted by an approved testing laboratory, using approved methods to demonstrate that the concrete meets slump loss requirements.

(i) Details of concrete placement, including proposed operational procedures for free fall, tremie or pumping methods, proposed concreting log form and computations for time duration of shaft pour estimates.

(j) Details of casing installation and removal methods. If welding of casing is proposed, submit the welding procedure. All welding shall be done in accordance with the current AWS Structural Welding Code.

(k) Details of methods for removal of obstructions. Obstructions for which the Contractor shall provide details of methods for removal include, but are not necessarily limited to, removal of boulders, concrete, riprap, steel, timber or miscellaneous debris.

(l) Details for any monitoring plan as called for in the Contract.

The Engineer will evaluate the drilled shaft Installation Plan for conformance with the Contract and will then notify the Contractor of any additional information required or changes necessary in order to meet Contract requirements. All procedural approvals given by the Engineer shall be subject to trial in the field and shall not relieve the Contractor of the responsibility to satisfactorily complete Project work as detailed in the plans and specifications. The Contractor shall not commence construction of drilled shafts until the Engineer has approved the Installation Plan.

If integrity or load testing of the drilled shafts is called for by the Contract or the Site conditions, this submittal shall be developed in coordination with and submitted concurrently with working drawing submittals, as required in the testing specifications.

All submittals shall comply with the working drawing submittal requirements outlined in Article 1.05.02.

2. **Trial Drilled Shaft Installation and Load Testing:** When called for in the Contract, the Contractor shall demonstrate the adequacy of the proposed methods, techniques and equipment by successfully constructing a trial drilled shaft in accordance with these

specifications. This trial drilled shaft shall be positioned away from production shafts, in the location shown on the plans or as directed by the Engineer. The trial shaft shall be drilled to the maximum depth shown in the plans. Failure by the Contractor to demonstrate to the Engineer the adequacy of methods and equipment shall be reason for the Engineer to require alterations of the Contractor's equipment or methods in order to prevent results unacceptable under the Contract or to the Engineer. Any additional trial drilled shaft required to demonstrate the adequacy of altered methods or construction equipment shall be at the Contractor's expense. Once the Engineer approves construction of production shafts, no changes will be permitted in the personnel, materials, methods or equipment used by the Contractor in constructing the satisfactory trial drilled shaft, unless the Contractor obtains the Engineer's written approval to do so.

Unless otherwise shown in the Contract, the trial drilled shaft shall have reinforcing bars, access tubes and concrete placed using the same materials and methods of construction to be used during construction of the production drilled shafts. The trial drilled shaft shall be cut off 2 ft (0.6 m) below finished grade and left in place. The disturbed area(s) at the site(s) of the trial drilled shaft(s) shall be restored as nearly as practical to original conditions.

Should the plans call for load testing of the trial drilled shaft, all necessary loading apparatus, instrumentation and other equipment required for performing the load test will be specified and paid for under a separate item.

All trial drilled shaft(s) and load test(s) must be completed and accepted by the Engineer prior to construction of any production drilled shafts. In the event that there is more than one trial drilled shaft and load test, the Contractor may begin construction of some of the production drilled shafts, in whatever way that the Engineer requires or approves.

3. **Protection of Existing Structures:** The Contractor shall control drilled shaft operations in a way that will prevent damage to existing structures or utilities, in accordance with Articles 1.07.09 and 1.07.13. Preventive measures shall include, but are not limited to: selecting construction methods and procedures to prevent caving of the shaft excavation, and that will include monitoring and controlling the vibrations from construction activities such as the driving of casing or sheeting, drilling of the shaft, or from any blasting that the Contract or the Engineer may have permitted.

   If monitoring is called for in the Contract, a preconstruction survey of existing facilities shall be performed to establish baseline data, including ambient vibration levels and existing structural defects. In general, monumented survey points shall be established on structures which are located within a distance of either ten (10) shaft diameters or the estimated shaft depth, whichever is greater. These points shall be monitored by the Contractor for vertical and lateral movement in an approved manner to the accuracy required by the Engineer.

   When deformations exceed the predetermined amount included in the plans, the Contractor shall immediately stop work and, if directed by the Engineer to do so, backfill the excavated hole. The Contractor shall be responsible for selecting and using equipment and procedures that keep deformations of existing structures within levels specified by the Contract or Engineer.

When vibrations are to be monitored, the Contractor must engage the services of a professional vibrations consultant to monitor and record vibration levels during drilled shaft construction. Unless the Engineer states otherwise, vibration monitoring equipment must be capable of detecting velocities of 0.1 in/sec (2.5 mm/sec) or less. When vibration levels exceed tolerable levels established by the Contract or Engineer, the Contractor shall immediately stop the work causing the vibrations and take whatever measures are necessary to reduce vibration levels to below tolerable levels. All costs related to vibration monitoring required in the Contract shall be included in the bid price for the Drilled Shaft item.

4. **Construction Sequence:** Excavation to footing elevation shall be completed before shaft construction begins unless otherwise noted in the Contract or approved by the Engineer. Any disturbance at or below the footing area caused by shaft installation shall be repaired by the Contractor prior to the footing construction.

   When drilled shafts are to be installed in conjunction with embankment placement, the Contractor shall construct drilled shafts after the placement of fills, unless shown otherwise in the Contract or approved by the Engineer.

   Drilled shafts, constructed prior to the completion of the fills, shall not be capped until the fills have been placed as near to final grade as possible, leaving only the workroom necessary for construction of the caps.

5. **Exploration Test Borings:** As soon as possible, the Contractor shall take soil samples or rock cores, where shown on the plans or as directed by the Engineer, in order to determine the character of the material directly below the completed shaft excavation. The soil samples shall be extracted with a split spoon sampler or undisturbed sample tube. The rock cores shall be cut with an approved triple tube core barrel to a minimum of 10 ft (3 m) below the bottom of the drilled shaft excavation before the excavation is made. The Engineer may require the depth of coring be extended up to a total depth of 20 ft (6 m). Rock core and standard penetration test samples shall be measured, visually identified and described in the Contractor's log. The samples shall be placed in suitable containers, identified by shaft location, elevation, and Project number and shall be delivered with the Contractor's field log to the Engineer within twenty-four (24) hours after each boring exploration is completed. The Engineer will inspect the samples and log in order to determine the final depth of required excavation based on evaluation of the material's suitability. The Contractor shall not start shaft drilling or construction of the shafts until the Engineer has determined the final depth of required excavation. Two (2) copies of the Contractor's final typed log shall be furnished to the Engineer within seven (7) calendar days after completion of the borings. The logs shall contain specific information about the drilling equipment and tools used and the rate of hole advancement, as well as descriptions of soil, rock, obstructions, and water encountered. The Contractor shall supply a suitable, secure location on the Site for storage of all soil and rock samples. At no time shall the soil or rock core samples be taken off the Site without the Engineer's permission to do so.

6. **General Methods and Equipment:** The Contractor shall perform the excavations required for shafts through whatever materials are encountered, to the dimensions and elevations shown in the plans or otherwise required by the Contract. The Contractor's methods and equipment shall be suitable for the intended purpose and materials encountered. The

permanent casing method shall be used only at locations shown on the plans or authorized by the Engineer in writing. Blasting shall be permitted only if specifically authorized on the plans or in writing by the Engineer.

7. **Uncased Construction Method:** This method consists of using water or slurry (mineral or polymer) to maintain stability of the borehole perimeter while advancing the excavation to final depth, placing the reinforcing cage, and concreting the shaft. Where drilled shafts are located in open water areas, exterior casings shall be extended from above the anticipated high water elevation into the ground in order to protect the shaft concrete from water action during placement and curing of the concrete. The exterior casing shall be installed in a manner that will produce a positive seal at the bottom of the casing, so that no piping of water or other materials occurs into or from the shaft excavation.

8. **Casing Construction Method:** The casing method may be used either where shown on the plans or at sites where uncased construction methods are inadequate to prevent hole caving or excessive deformation of the hole. In using this method, the casing may either be placed in a predrilled hole or advanced through the ground by twisting, driving or vibration before being cleaned out.

9. **Excavation and Drilling Equipment:** The Contractor's excavation and drilling equipment shall have adequate capacity, including power, torque and down-thrust to make it possible to excavate a hole of the maximum diameter and to a depth of twenty percent (20%) beyond the depths shown on the plans.

   The excavation and overreaming tools shall be of adequate design, size and strength to perform the work shown in the plans or described herein. When the material encountered cannot be drilled using conventional earth augers with soil or rock teeth, drill buckets, grooving tools, or underreaming tools, the Contractor shall provide special drilling equipment, including but not limited to: rock core barrels, rock tools, air tools, blasting materials, or other equipment as necessary to enable construction of the shaft excavation to the size and depth required. Excavation by blasting may not be performed without the prior written approval of same by the Engineer.

10. **Excavation:** Shaft excavations shall be made at locations and to the top of shaft elevations, estimated bottom of shaft elevations, shaft geometry and dimensions shown in the Contract. If material encountered during excavation is unsuitable for these purposes or differs from that anticipated in the design of the drilled shaft, the Contractor shall extend drilled shaft tip (base) elevations as and when the Engineer directs it to do so.

    The Contractor shall maintain a construction method log during shaft excavation. The log shall contain information such as the description and approximate top and bottom elevation of each soil or rock material encountered, of seepage or ground water, and any other relevant information or observations, including a description of the tools and drill rigs used and any changes necessitated by changing ground conditions.

    The Contractor shall dispose of any excavated materials removed from shaft excavations in accordance with the applicable Contract requirements for disposal of excavated materials, including those in Section 1.10.

The Contractor shall not permit workers to enter the shaft excavation for any reason unless (1) a suitable casing has been installed and the water level has been lowered and stabilized below the level to be occupied, and (2) adequate safety equipment and procedures have been provided to workers entering the excavation. Any placement of workers within the shaft excavation shall be in conformance with OSHA regulations and industry standards.

11. **Drilled Shaft Earth Excavation:** Drilled shaft earth excavation is (1) excavation accomplished with conventional tools such as augers and drilling buckets attached to drilling equipment of the size, power, torque, and down-thrust (crowd) proposed by the Contractor in a construction procedure approved by the Engineer, or (2) successful construction of a trial drilled shaft. Earth excavation may include, but will not necessarily be limited to, excavation of clay, silt, sand, gravel, cobbles, boulders, weathered rock, and miscellaneous fill.

12. **Drilled Shaft Rock Excavation:** Drilled shaft rock excavation is (1)excavation of competent rock, accomplished with conventional rock drilling tools, such as core barrels attached to drilling equipment of the size, power, torque, and down-thrust (crowd) as proposed by the Contractor in a construction procedure approved by the Engineer or (2) successful construction of a trial drilled shaft. Top of competent rock is as shown on the Contract drawings.

13. **Obstructions:** When obstructions are encountered, the Contractor shall notify the Engineer of them immediately. Obstructions are defined as impenetrable objects that

    (a) cannot be removed or excavated using conventional augers fitted with soil or rock teeth, underreaming tools, or drilling buckets; or

    (b) cause a significant decrease in the rate of excavation advancement, relative to the rate of advancement for the rest of the shaft excavation within the particular strata where the obstruction is located that had been achieved using the techniques and equipment that had previously been used successfully to excavate the shaft.

    The Engineer will be the sole judge of the significance of any reduced rate of shaft advancement and of the classification of obstruction excavation. The Engineer will be present at the site of the obstruction in order to evaluate obstructions, to authorize measures for dealing with them, and to approve the designation each obstruction. Sloping bedrock or bedrock that is higher than anticipated by the plans shall not be considered as requiring obstruction excavation. Shallow obstructions are obstructions located within 5 ft (1.5 m) of the top level of the shaft. Shallow obstructions at shaft locations shall be removed at the Contractor's expense.

    The Contractor shall remove all subsurface obstructions at drilled shaft locations. Such obstructions may include man-made materials, such as concrete foundations, and natural materials, such as boulders. Subsurface obstruction removal special procedures/tools may include, but are not limited to, chisels, boulder breakers, core barrels, down-the-hole hammers, air tools, hand excavation, temporary casing, and increases of the hole diameter. Blasting shall not be permitted unless specifically approved in advance in writing by the Engineer.

14. **Lost Tools:** Drilling tools lost in the excavation shall not be considered obstructions and shall be promptly removed by the Contractor without compensation. All costs due to lost tool removal shall be borne by the Contractor including, but not limited to, costs associated with the repair of hole degradation due to removal operations or due to the hole's remaining open for an excessively long time.

15. **Casing:** Casings shall be steel, smooth, clean, watertight, and of ample strength to withstand both handling and installation and the pressure of both concrete and the surrounding earth materials. The outside diameter of casings shall not be less than the specified diameter of the shaft, and the outside diameter of any excavation made below the casing shall not be less than the specified diameter of the shaft. No extra compensation will be paid for concrete required to fill an oversized casing or oversized excavation. All casings, except permanent casings, shall be removed from shaft excavations. Any length of permanent casing installed below the shaft cutoff elevation shall remain in place.

    When the shaft extends above ground or through a body of water, the portion exposed above ground or through the water may be formed with removable casing, except when permanent casing is specified. Removable casing shall be stripped from the shaft in a manner that will not damage the concrete. Casings may be removed when the concrete has attained sufficient strength, provided: curing of the concrete is continued for a seventy-two (72) hour period; the shaft concrete is not exposed to salt water or moving water for seven (7) days; and the concrete reaches a compressive strength of at least 2500 psi (17,235 kPa) as determined from concrete cylinder breaks.

16. **Temporary Casing:** All subsurface casing shall be considered temporary unless specifically shown as permanent casing in the Contract. The Contractor shall be required to remove temporary casing before or immediately after completion of concreting the drilled shaft. Casing shall never be pulled after the concrete begins to set, due to probable entrapment of drilling fluid in the shaft concrete and probable separation of the concrete within the shaft.

    If the Contractor elects to remove a casing and substitute a longer or larger-diameter casing through caving soils, the excavation shall either be stabilized with slurry or backfilled before the new casing is installed. Other methods approved by the Engineer may be used to control the stability of the excavation and protect the integrity of foundation materials.

    Before the casing is withdrawn, the level of fresh concrete in the casing shall be a minimum of 5 ft (1.5 m) above either the hydrostatic water level in the formation or the level of drilling fluid in the annular space behind the casing, whichever is higher. As the casing is withdrawn, care shall be exercised to maintain an adequate level of concrete within the casing, so that fluid trapped behind the casing is displaced upward and discharged at the ground surface without contaminating or displacing the shaft concrete.

    Temporary casings that become bound or fouled during shaft construction and cannot practicably be removed shall constitute a defect in the drilled shaft. The Contractor shall be responsible to improve such defective shafts to the satisfaction of the Engineer. Improvement may consist of, but not be limited to, removing the shaft concrete and extending the shaft deeper, in order to compensate for loss of frictional capacity in the cased zone; providing straddle shafts to compensate for capacity loss; grouting around the

exterior of the shaft; or providing a replacement shaft. All corrective measures, including redesign of footings caused by defective shafts, shall be done to the satisfaction of the Engineer by the Contractor without either compensation or an extension of Contract time of the Project. In addition, no compensation will be paid for casing remaining in place.

17. **Permanent Casing:** Permanent casing shall be used where specified by the Contract. The casing shall be continuous between top and bottom elevations as shown in the plans. After installation is complete, the permanent casing shall be cut off at the prescribed elevation.

    In cases in which special temporary casings are shown on the plans or authorized in writing by the Engineer to be used in conjunction with permanent casing, the Contractor shall maintain both alignment of the temporary casing with the permanent casing and a positive, watertight seal between the two casings during excavation and concreting operations.

    Permanent casing shall maintain close contact with the surrounding earth after installation. Use of an oversized hole or temporary casing outside the permanent casing beneath the ground surface will not be allowed without the advance written permission of the Engineer to do so. Should an oversized hole or temporary casing outside the permanent casing beneath the ground surface be allowed by the Engineer, grouting of the exterior annular space shall be provided by the Contractor in order to create close contact between the casing and the surrounding ground. The grouting shall extend from the bottom of the annular space to an elevation determined by the Engineer. No compensation will be paid to the Contractor for grouting of the exterior annular space.

18. **Slurry:** Mineral or polymer slurries shall be employed when slurry is used in the drilling process, unless other drilling fluids are approved in writing by the Engineer. Mineral slurry shall have both a mineral grain size that will remain in suspension and sufficient viscosity and gel characteristics to allow it to transport excavated material to a suitable screening system. The percentage and specific gravity of the material used to make the mineral suspension shall be sufficient to maintain the stability of the excavation and to allow proper concrete placement.

    During construction, the level of the slurry shall be maintained at a height sufficient to prevent caving of the hole. The slurry head shall remain above the piezometric head of the groundwater. This includes initial drilling of the borehole down to the piezometric level. Slurry shall be introduced when the depth of the borehole is still above the piezometric level, not after the inflow of water can be detected and sloughing has begun. In the event of a sudden significant loss of slurry to the hole, the construction of that foundation shall be stopped until either a method to stop slurry loss or an alternate construction procedure has been approved by the Engineer.

    Mineral slurry shall be premixed thoroughly with clean fresh water and adequate time (as prescribed by the mineral manufacturer) shall be allotted for hydration prior to introduction into the shaft excavation. Slurry tanks of adequate capacity shall be required for slurry circulation, storage, and treatment. No excavated slurry pits will be allowed in lieu of slurry tanks without the written consent of the Engineer to the substitution. Desanding equipment shall be provided by the Contractor as necessary to keep slurry sand content at less than

four percent (4%) by volume at any point in the borehole at the time the slurry is introduced, including situations in which temporary casing will be used. The Contractor shall take all steps necessary to prevent the slurry from "setting up" in the shaft. Such methods may include, but are not limited to: agitation, circulation and adjusting the properties of the slurry. The Contractor shall dispose of all slurry in suitable off-Site areas. Disposal of the slurry shall also comply with Section 1.10.

Control tests using suitable apparatus shall be carried out on the mineral slurry by the Contractor in order to determine density, viscosity and pH. An acceptable range of values for mineral slurry physical properties is shown in Table 7.01-1:

TABLE 7.01-1, MINERAL SLURRY PROPERTIES
(Sodium Bentonite or Attapulgite in Fresh Water)

	Acceptable Range of Values		
Property	**At Time of Slurry Introduction**	**In Hole at Time of Concreting**	**Test Method**
Density - pcf (kN/m^2)	64.3* - 69.1* (10.1* - 10.8*)	64.3* - 75.0* (10.1* - 11.8*)	Density Balance
Viscosity - sec./quart (sec./liter)	28 – 45 (26 – 43)	28 – 45 (26 – 43)	Marsh Funnel
pH	8 - 11	8 - 11	pH paper, pH meter

* Increase by 2 pcf (0.3 kN/m^2) in salt water

Notes:
(a) Tests shall be performed when the slurry temperature is above 40° F (4.5° C).
(b) If desanding is required, sand content shall not exceed 4% (by volume) at any point in the borehole, as determined by the American Petroleum Institute sand content test when the slurry is introduced.

Tests to determine density, viscosity and pH value shall be performed during the shaft excavation to establish a consistent working pattern. A minimum of four (4) sets of tests shall be made during the first eight (8) hours of slurry use. When the tests show consistent results, the testing frequency may be decreased to one (1) set every four (4) hours of slurry use.

If the Contractor proposes to use polymer slurry, either natural or synthetic, use of the product must be approved in advance by the Engineer. Slurry properties at the time of mixing and at the time of concreting must comply with the manufacturer's written recommendations. Whatever product is used, the sand content at the base of the drilled shaft excavation shall not exceed one percent (1%) when measured by Method API 13B-1, Section 5, immediately prior to concreting.

If the Contractor proposes to use blended mineral-polymer slurry, the Contractor shall submit to the Engineer a detailed report specific to the Project, prepared and signed by a qualified slurry consultant, describing the proposed slurry materials, the mix proportions, mixing methods and quality control methods.

If polymer slurry, or blended mineral-polymer slurry, is proposed, the Contractor's slurry management plan shall include detailed provisions for controlling the quality of the slurry, including tests to be performed, the frequency of those tests, the test methods, and any maximum or minimum property requirements that must be met in order to ensure that the slurry meets its intended functions in the subsurface conditions at the Project site and with the construction methods to be used. The slurry management plan shall include a set of the slurry manufacturer's written recommendations and shall include the following tests, as a minimum: Density test (API 13B-1, Section 1), viscosity test (Marsh funnel and cup, API 13B-1, Section 2.2, or approved viscometer), pH test (pH meter, pH paper), and sand content test (API sand content kit, API 13B-1, Section 5).

If such a proposal is approved by the Engineer, the Contractor may use water as a drilling fluid. In that case, all of the provisions in Table 7.01-1 for mineral slurries must be met, except that the maximum density shall not exceed 70 pcf (11 kN/m^2).

The Contractor shall ensure that a heavily-contaminated slurry suspension, which could impair the free flow of concrete, has not accumulated in the bottom of the shaft. Prior to placing concrete in any shaft excavation, the Contractor shall take slurry samples using a sampling tool approved by the Engineer. Slurry samples shall be extracted from the base of the shaft and at intervals not exceeding 10 ft (3 m) up the slurry column in the shaft, until two (2) consecutive samples produce acceptable values for density, viscosity, and pH.

When any slurry samples are found to be unacceptable, the Contractor shall take whatever action is necessary to bring the slurry within specification requirements. Concrete shall not be placed until the slurry in the hole is re-sampled and test results produce acceptable values.

Reports of all tests specified above, signed by an authorized representative of the Contractor, shall be furnished to the Engineer on completion of each drilled shaft.

During construction, the level of mineral or blended mineral-polymer slurry in the shaft excavation shall be maintained at a level not less than 4 ft (1.2 m) above the highest expected piezometric pressure head along the depth of the shaft, and the level of polymer slurry shall be maintained at a level not less than 6 ft (1.8 m) above the highest expected piezometric pressure head along the shaft. If at any time, in the opinion of the Engineer, the slurry construction method fails to produce the desired final results, the Contractor shall discontinue this method and propose an alternate method for approval by the Engineer.

Drilling tools shall contain vents to stabilize hydrostatic pressure above and below the tool during insertion and extraction. The rate of tool extraction shall not cause any noticeable turbulence in the slurry column in the borehole.

The Contractor shall arrange for the slurry manufacturer's technical representative to be present at the Site during Project startup, or throughout the entire Project if continual difficulty is expected, in order to ensure that the slurry is mixed and managed properly.

19. **Excavation Inspection:** The Contractor shall check the dimensions and alignment of each shaft excavation. Final shaft depths shall be measured with a suitable weighted tape or other approved method after final cleaning. The Contractor shall provide equipment and

access to the Engineer for confirming dimension, alignment, and bottom cleanliness. Acceptable shaft cleanliness will be determined by the Engineer.

20. Construction Tolerances: The following construction tolerances apply to drilled shafts, unless otherwise stated in the Contract:

(a) The center of the drilled shaft shall be within 3 in (76 mm) of plan position in the horizontal plane at the plan elevation for the top of the shaft.

(b) The vertical alignment of a vertical shaft excavation shall not vary from the plan alignment by more than 1/4 in/ft (21 mm/m) of depth.

(c) After the concrete is placed, the top of the reinforcing steel cage shall be no more than 6 in (150 mm) above and no more than 3 in (76 mm) below plan position.

(d) All casing diameters shown on the plans refer to outside diameter ("OD") dimensions. The dimensions of casings are subject to American Petroleum Institute tolerances applicable to regular steel pipe. The Contractor may elect to provide a casing larger in diameter than shown in the plans, if the Engineer approves its doing so.

(e) The top elevation of the shaft shall have a tolerance of plus 1 in (25 mm) or minus 3 in (76 mm) from the plan top-of-shaft elevation.

(f) Excavation equipment and methods shall be designed so that the completed shaft excavation will have a planar bottom. The cutting edges of excavation equipment shall be normal to the vertical axis of the equipment within a tolerance of +/- 3/8 in/ft (+/- 3 mm/m) of diameter.

Drilled shaft excavations and completed shafts not constructed within the required tolerances are unacceptable. The Contractor shall be responsible for correcting all unacceptable shaft excavations and completed shafts to the satisfaction of the Engineer. Materials and work necessary, including engineering analysis and redesign, in order to complete corrections for out-of-tolerance drilled shaft excavations, shall be furnished without cost to the State or extension of Contract time.

21. Reinforcing Steel Cage Construction and Placement: The reinforcing steel cage, consisting of longitudinal bars, ties, cage stiffener bars, spacers, centralizers, and other necessary appurtenances, shall be completely assembled and placed as a unit immediately after the shaft excavation is inspected and accepted, and prior to concrete placement. Internal stiffeners shall be removed as the cage is placed in the borehole, so as not to interfere with the placement of concrete.

The reinforcing steel in the shaft shall be tied and supported so that the reinforcing steel will remain within allowable tolerances. Concrete spacers or other approved noncorrosive spacing devices shall be used at sufficient intervals near the bottom and at intervals not exceeding 10 ft (3 m) up the shaft, in order to ensure concentric spacing for the entire cage length. Spacers shall be constructed of approved material, equal in quality and durability to the concrete specified for the shaft. The spacers shall be of adequate dimension to ensure

a minimum 3 in (76 mm) annular space between the outside of the reinforcing cage and the side of the excavated hole. Approved cylindrical concrete feet (bottom supports) shall be provided to ensure that the bottom of the cage is maintained the proper distance above the base.

The elevation of the top of the steel cage shall be checked before and after the concrete is placed. If the upward displacement of the rebar cage exceeds 2 in (51 mm) or if the downward displacement exceeds 6 in per 20 ft (152 mm per 6 m) of shaft length, the drilled shaft will be considered defective. In such a case, corrections shall be made by the Contractor to the satisfaction of the Engineer. No additional shafts shall be constructed until the Contractor has modified the rebar cage support in a manner satisfactory to the Engineer.

22. **Concrete Placement:** Concrete placement shall be performed in accordance with the applicable portions of Section 6.01 and with the requirements herein dealing with concrete materials.

    Concrete shall be placed as soon as possible after reinforcing steel placement and after the Engineer has accepted the cleanliness of the shaft. The Engineer may re-inspect the shaft for cleanliness should there be any delays between initial acceptance of shaft cleanliness and commencement of the concrete placement. If during such a delay the Engineer has determined that shaft cleanliness has deteriorated, the Engineer may require the Contractor to re-clean the shaft. The Contractor may be required to remove the rebar cage should it be necessary in order to achieve the required shaft cleanliness. The Contractor will not be compensated for any cost or loss of time due to the need to re-clean the shaft.

    Concrete placement shall be continuous from the bottom to the top elevation of the shaft. Concrete placement shall continue after the shaft excavation is filled and good quality concrete is evident at the top of shaft. Concrete shall be placed by free fall, or through a tremie or concrete pump. Free fall placement will be permitted only in dry holes. Concrete placed by free fall shall fall directly to the base without contacting the rebar cage or hole sidewall. Drop chutes may be used to direct concrete to the base during free fall placement.

    The Contractor shall maintain Concreting Logs during all concrete placement. The log shall include, but not be limited to, concreting curves plotting Depth-to-Top of Concrete vs. Volume of Concrete Placed (for both theoretical and actual volumes of concrete placed). The Contractor shall provide a copy of each log to the Engineer upon completion of each drilled shaft concrete placement. A sample of the proposed log to be used by the Contractor shall be submitted as part of the Installation Plan working drawing submittal.

23. **Tremies:** Tremies may be used for concrete placement in either wet or dry holes. Tremies used to place concrete shall consist of a tube of sufficient length, weight, and diameter to discharge concrete at the shaft base elevation. The tremie shall not contain aluminum parts that may come in contact with the concrete. The tremie's inside diameter shall be at least six (6) times the maximum size of aggregate used in the concrete mix, but shall not be less than 10 in (254 mm). The inside and outside surfaces of the tremie shall be clean and

smooth in order to permit flow of concrete and unimpeded withdrawal during concreting. The wall thickness of the tremie shall be adequate to prevent crimping or sharp bends, which would restrict concrete placement.

The tremie used for wet excavation concrete placement shall be watertight. Underwater or under-slurry placement shall not begin until the tremie is placed to the shaft base elevation, and the concrete shall be kept completely separated from the water or slurry prior to the time that it is discharged. Valves, bottom plates or plugs may be used for this purpose only if concrete discharge can begin within 1 tremie diameter of the base of the drilled shaft. Plugs shall either be removed from the excavation or be of a material approved by the Engineer that will not cause a defect in the shaft if not removed. The discharge end of the tremie shall be constructed to permit the free radial flow of concrete during placement operations. The tremie discharge end shall be immersed at least 5 ft (1.5 m) in concrete at all times after starting the flow of concrete. The flow of the concrete shall be continuous. The level of the concrete in the tremie shall be maintained above the level of slurry or water in the borehole at all times, in order to prevent water or slurry intrusion into the shaft concrete.

If at any time during the concrete placement, the tremie line orifice is removed from the fluid concrete column and it discharges concrete above the rising concrete level, the shaft will be considered defective. All costs of repair or replacement of defective shafts shall be the responsibility of the Contractor.

24. **Pumped Concrete:** Concrete pumps and lines may be used for concrete placement in either wet or dry excavations. All pump lines shall have a minimum 4 in (102 mm) diameter and be constructed with watertight joints. Concrete placement shall not begin until the pump line discharge orifice is at the shaft base elevation.

    For wet excavations, a plug or similar device shall be used to separate the concrete from the fluid in the hole until pumping begins. The plug shall either be removed from the excavation or be of a material approved by the Engineer that will not cause a defect in the shaft if not removed.

    The discharge orifice shall remain at least 5 ft (1.5 m) below the surface of the fluid concrete. When lifting the pump line during concreting, the Contractor shall temporarily reduce the line pressure until the orifice has been repositioned at a higher level in the excavation.

    If at any time during the concrete placement the pump line orifice is removed from the fluid concrete column and it discharges concrete above the rising concrete level, the shaft will be considered defective. All costs of repair or replacement of defective shafts shall be the responsibility of the Contractor.

25. **Drop Chutes:** Drop chutes may be used to direct placement of free-fall concrete in excavations where the maximum depth of water does not exceed 3 in (76 mm). Free fall placement is not permitted in wet excavations. Drop chutes shall consist of a smooth tube of either one-piece construction or sections that can be added and removed. A drop chute can also be a hopper with a short tube to direct the flow of concrete. Concrete may be placed through either the hopper at the top of the tube or side openings as the drop chute

is retrieved during concrete placement. If concrete placement causes the shaft excavation to cave or slough, or if the concrete strikes the rebar cage or sidewall, the Contractor shall reduce the height of free fall or reduce the rate of concrete flow into the excavation, or both. If caving or sloughing of the borehole walls occurs during free-fall placement of concrete, the shaft will be considered defective. All costs of repair or replacement of defective shafts shall be the responsibility of the Contractor. If concrete placement cannot be satisfactorily accomplished by free fall, in the opinion of the Engineer, the Contractor shall use either tremie or pumping techniques to accomplish the concrete placement.

26. **Access Tubes for Crosshole Acoustic Logging:** Access tubes for crosshole acoustic logging shall be placed on each reinforcing cage designated in the Contract in the position and at the frequency shown on the plans. Access tubes must be firmly secured to the cage. Normally, the tubes shall extend from 6 in (150 mm) above the bottom of the shaft to at least 3 ft (0.9 m) above the top of the shaft, or 2 ft (0.6 m) above the ground surface if the shaft is cut off below the ground surface. If cross-hole acoustic tests are to be performed, the access tubes shall be filled with clean water no later than four (4) hours after placement of the concrete and the tubes capped during concrete placement to keep out concrete and debris. In all cases, the access tubes shall be as nearly parallel as possible and be placed as far from the longitudinal steel bars as possible.

    Prior to the beginning of downhole logging, the Contractor shall assure that the Cross-Hole Acoustic Logging test probes can pass through every tube to the bottom. If a tube is obstructed, the entire length of the obstructed access tube will not be measured for payment. The Engineer may also require the Contractor to core a hole within the drilled shaft near and to the full depth of the obstructed tube. The cored hole shall be large enough to accommodate the test probe for the full length of the hole. The coring equipment, coring procedure and location of the core hole shall be approved by the Engineer before the coring process may begin. The coring method shall provide for complete core recovery and shall minimize abrasion and erosion of the core. The core hole shall be placed at a position in the shaft that will not produce damage to the reinforcing steel in the shaft. The core hole shall be logged, voids or defects indicated on the log, and the log submitted to the Engineer. Cores shall be preserved and made available for inspection by the Engineer. The core hole will be treated as an access tube for downhole testing. Core holes that are drilled to substitute for a blocked access tube shall be measured and paid for at the Contract unit price for Access Tubes.

    Upon completion of all tests involving access tubes and after acceptance of the drilled shaft, the access tubes and core holes shall be filled with grout.

27. **Evaluation and Acceptance or Rejection of Drilled Shafts:** Upon completion and integrity testing (if called for) of a drilled shaft, the Engineer will review all available drilling logs, drilled shaft construction logs, concreting logs, inspection reports, load test results, and integrity test results in order to determine the acceptability of the drilled shaft. If the Engineer determines that available data is inconclusive, the Engineer may call for additional integrity testing, coring, or other appropriate actions necessary for evaluating the drilled shaft. Should the additional integrity testing or coring confirm the presence of anomalies, the Contractor will not be compensated for the cost of the additional integrity testing or coring (even if the anomalies are determined to be non-critical and the shaft is found to be acceptable). Should additional integrity testing or coring demonstrate that anomalies are

not present (prior to any remedial work), the additional integrity testing or coring will be paid for by the Department. The Contractor may continue to construct drilled shafts before receipt of notice of acceptance of the tested shaft or shafts by the Engineer. If the Engineer finds previously-constructed shaft(s) to be unacceptable, the Contractor shall be required to repair, at its expense, the unacceptable shaft(s) to the satisfaction of the Engineer. The Contractor shall prove to the satisfaction of the Engineer, at no expense to the State, the acceptability of all shafts constructed since the time that the unacceptable shaft was constructed and to prove the acceptability of the procedure to be used in constructing future shafts. If the Engineer deems the construction procedure to be unacceptable, the Contractor shall cease all drilled shaft construction until submittal of a new construction procedure to the Engineer and the Engineer has accepted it.

The Contractor shall submit repair procedures to the Engineer for review and approval. If these plans involve change of or impact on the structural design of the shafts or shaft caps, or the geometry of the shafts, any proposed redesign of the Contractor's plan shall be performed at the Contractor's expense by a qualified Professional Engineer registered in the State of Connecticut.

The Engineer may require that additional shafts be tested. If the testing of the additional shaft(s) indicates the presence of a defect in any additional shaft, the testing cost for that shaft shall be borne by the Contractor, and the Contractor shall repair the shaft at its own expense, as above. Any additional testing required by the Engineer on repaired drilled shafts shall be considered part of the Contractors remediation plan, to be paid for by the Contractor.

7.01.04 - Method of Measurement:

1. **Furnishing Drilled Shaft Drilling Equipment**: There will be no measurement of the work performed under this Lump Sum item.

2. **Drilled Shaft** will be measured for payment by the length in linear feet (meters) of the completed and accepted concrete drilled shaft, of the diameter and containing the reinforcement shown on the plans. The length will be determined as the difference between the plan top-of-shaft elevation and the final bottom-of-shaft elevation.

3. **Drilled Shaft Earth Excavation** will be measured for payment by the length in linear feet (meters) of completed earth excavation of the diameter shown on the plans (measured along the centerline of the shaft), either from the top of existing grade elevation prior to drilling or from the bottom of the drilled shaft cap elevation (whichever is lower), to either the top of competent rock elevation (if the drilled shaft extends onto or into competent rock) or to the bottom of the shaft elevation (if the shaft does not extend onto or into competent rock).

4. **Drilled Shaft Rock Excavation** will be measured for payment by the length in linear feet (meters) of completed rock excavation of the diameter shown on the plans, measured along the centerline of the shaft from the top-of-competent-rock elevation to the bottom-of-the-shaft elevation

5. **Obstructions** will be measured for payment, after designation as an obstruction by the

Engineer, by the number of hours of work, or fraction thereof per obstruction, required to remove the obstruction.

6. **Trial Drilled Shaft** will be measured for payment by the authorized linear feet (meters) of trial shaft holes drilled to the diameter shown on the plans, completed (including backfill and restoration of area, when required) and accepted. The length of trial shaft holes will be determined as the difference between the existing ground surface elevation at the center of the trial shaft hole prior to drilling and the authorized bottom elevation of the hole.

7. **Exploration Test Borings** will be measured for payment by the length in linear feet (meters), measured from the existing grade elevation to the bottom elevation of the exploration hole, for each authorized exploration boring drilled.

8. **Permanent Casing** will be measured for payment by the length in linear feet (meters) of each diameter casing installed and accepted. The length to be paid will be measured along the casing from the top-of-the-shaft elevation or the top of the casing, whichever is lower, to the bottom of the casing at each shaft location where permanent casing is used.

9. **Access Tubes** will be measured for payment by the length in linear feet (meters) of unobstructed access tube, installed and accepted in the drilled shafts, to the depths shown on the plans

7.01.05 - Basis of Payment:

1. **Furnishing Drilled Shaft Drilling Equipment:** Payment for this item will be at the Contract lump sum price for “Furnishing Drilled Shaft Drilling Equipment” which will be considered full and complete payment for furnishing and moving the drilling equipment to the Site, setting up the equipment at the required locations, and removing the equipment from the Site.

   Payment of sixty percent (60%) of the lump sum amount bid for this item will be made when all drilling equipment is on the Site, assembled and ready to drill foundation shafts. Payment of the remaining forty percent (40%) of the lump sum amount will be made when all shafts have been drilled, all shaft concrete has been placed to the top of the shaft, all defects are repaired, and all drilled shafts have been accepted by the State.

2. **Drilled Shaft:** Drilled shafts will be paid for at the Contract unit price per linear foot (meter) for “Drilled Shaft (Diameter)” complete and accepted in place, including submittals, concrete and reinforcing steel, all labor, equipment, materials, temporary casings, slurry, slurry technical representative, blasting (if allowed), protection of existing facilities or utilities, vibration monitoring and incidentals necessary to complete the drilled shaft.

3. **Drilled Shaft Earth Excavation:** This work will be paid for at the Contract unit price per linear foot (meter) for “Drilled Shaft Earth Excavation (Diameter)” complete, including all labor, equipment, materials, water control, and disposal of excavated material necessary.

4. **Drilled Shaft Rock Excavation:** Drilled shaft rock excavation will be paid for at the Contract unit price per linear foot (meter) for “Drilled Shaft Rock Excavation (Diameter)” complete, including all labor, equipment, materials, water control, and disposal of excavated

material necessary. No payment will be made for additional rock excavation or placement of additional shaft concrete resulting from blasting overbreak (if blasting is allowed).

5. **Obstructions:** Removal of obstructions will be paid for at the Contract unit price per hour for “Obstructions” complete, including all labor, equipment, materials, excavation of obstructions, water control, disposal of excavated material necessary. If the Contractor chooses to use a larger shaft diameter for obstruction excavation, no additional compensation will be paid for performing such oversized obstruction excavation.

6. **Trial Drilled Shaft:** Trial drilled shafts will be paid for at the Contract unit price per linear foot (meter) for “Trial Drilled Shaft (Diameter)” complete and accepted, including all labor, equipment, materials, excavation of the trial drilled shaft through whatever materials are encountered, to the bottom of shaft elevation shown on the plans or as authorized by the Engineer (using slurry approved by the Engineer as necessary), providing inspection facilities, backfilling the hole, restoring the Site as required, and all other expenses to complete the trial shaft.

7. **Exploration Test Borings:** Soil samples, rock cores or both, of the diameter and length required and authorized by the Engineer will be paid for at the Contract unit price per linear foot (meter) for “Exploration Test Boring” complete, including drilling, extracting, packaging and classifying samples or cores, delivery of same to the Engineer, furnishing concrete or grout to fill the core hole, providing a written log of the hole, and all other expenses necessary.

8. **Permanent Casing:** Permanent casings will be paid for at the Contract price per linear foot (meter) for “Permanent Casing (Diameter)” complete, including furnishing and placing the permanent casing in the shaft excavation.

9. **Access Tubes:** Access tubes will be paid for at the Contract unit price per linear foot (meter) of unobstructed “Access Tubes” complete and accepted, installed in the drilled shafts to the depths shown on the plans, including the post-test grouting of the access tubes.

Pay Item	Pay Unit
Furnishing Drilled Shaft Drilling Equipment	l.s. (l.s.)
Drilled Shaft (Diameter)	l.f. (m)
Drilled Shaft Earth Excavation (Diameter)	l.f. (m)
Drilled Shaft Rock Excavation (Diameter)	l.f. (m)
Obstructions	hr. (hr.)
Trial Drilled Shaft (Diameter)	l.f. (m)
Exploration Test Boring	l.f. (m)
Permanent Casing (Diameter)	l.f. (m)
Access Tubes	l.f. (m)

CONNECTICUT
SUPPLEMENTAL SPECIFICATION
SECTION 7.02
PILES

Delete the entire section and replace it with the following:

SECTION 7.02
PILES

7.02.01—Description
7.02.02—Materials
7.02.03—Construction Methods
7.02.04—Method of Measurement
7.02.05—Basis of Payment

7.02.01—Description: This item shall consist of furnishing and driving foundation piles of the type and dimensions designated. Piles shall conform to and be installed in accordance with these specifications, and at the location, and to the elevation, penetration and/or capacity shown on the plans, or as directed by the Engineer. If specified in the plans or directed by the Engineer, piles shall be tipped, shaped, reinforced or otherwise pointed and strengthened
Test piles shall be piles of the type specified, driven in advance of placing orders for the piles, for the purpose of determining length or bearing capacity of piles. The Contractor shall furnish the piles in accordance with an itemized order list which will be furnished by the Engineer, showing the number and length of all piles. When test piles are specified, the pile lengths shown on the plans are for estimating purposes only. The actual lengths to be furnished for production piles will be determined by the Engineer after the test piles have been driven.

7.02.02—Materials: Piles of the type indicated on the plans shall conform to the requirements of Articles M.09.02 and M.14.01.

7.02.03—Construction Methods

1. Pile Types:
(a) Timber Piles: The method of storing and handling timber piles shall be such as to avoid damage to the piles. Special care shall be taken to avoid breaking the surface of treated piles. Cant dogs, hooks, or pike-poles shall not be used. Cuts or breaks in the surface of treated piling shall be given three brush coats of hot creosote oil of approved quality, and hot creosote oil shall be poured into all bolt holes.

(**b) Steel Piles:** The methods of storing and handling steel piles shall be such as to prevent damage to the piles and to protect them from corrosion.

(c) Cast-In-Place Concrete Piles: Cast-in-place concrete piles shall be constructed by driving steel shells and filling them with concrete. Shells shall be continuously or incrementally tapered, or cylindrical, or a combination of continuously or incrementally

tapered lower sections, which are extended with cylindrical upper sections, unless otherwise provided in the plans or special provisions. The tapered portion of piles shall have a minimum tip diameter of 8 inches (200 millimeters) and shall change in diameter not less than 1 inch in every 12 feet (7 millimeters/meter). Cylindrical piles and the cylindrical extension portions of tapered piles shall have a minimum diameter of 12 inches (300 millimeters). Shells for cast-in-place concrete piles shall be formed by joining sections of the same manufacture, unless otherwise permitted by the Engineer. Composite shell piles, which are piles composed of different thicknesses or of different manufacture, shall not be used unless shown on the plans or approved by the Engineer. Prefabricated driving points or other type tip enclosures shall be subject to the approval of the Engineer.

The Contractor shall furnish shells of a type and gage which can be driven without distortion. Shells which fail, fracture or otherwise distort during driving or after driving shall be withdrawn or replaced at the Contractor's expense. The metal of shells which are to be driven without a mandrel shall be of sufficient thickness to withstand the driving without failure, fracture or distortion, but in no case shall the thickness be less than No. 7 gage. Shells driven with a mandrel shall have a thickness not less than No. 18 gage. Piles having a shell thickness less than No. 9 gage shall be reinforced as shown on the plans.

Composite shell piles formed by extending lower sections of No. 7 or heavier gage, with upper sections of lighter than No. 7 gage, shall be driven with an internal mandrel in such a manner so as to insure shell alignment and maximum hammer energy transmission throughout the pile shell length. All details concerning compatibility of shell and mandrel construction shall be subject to the approval of the Engineer.

After driving has been completed, the shell shall be inspected and approved before any concrete is placed. The Contractor shall provide suitable lights and other equipment necessary to inspect each shell throughout its length.

All seams, joints and splices in shells shall develop the full strength of the shell and shall be watertight. Damaged shells that are unacceptable to the Engineer shall be filled with sand and a replacement shell or shells shall be driven adjacent thereto.

Reinforcement shall be placed in accordance with the requirements of the plans or special provisions.

No concrete shall be placed in a pile until all driving within a radius of 15 feet (4.5 meters) from the pile has been completed, or until all the shells for any one bent have been completely driven. If this is not practical, all driving within the above limits shall be discontinued until the concrete in the last pile cast has set at least 7 days.

Concrete shall be placed continuously in each pile, care being used to fill every part of the shell, and to work concrete around the reinforcement without displacing it. No concrete shall be placed in shells containing an accumulation of water or any foreign material.

Extensions, or "build-ups" on concrete piles, shall be avoided; but when necessary, they shall be made as specified in Subarticle 7.02.03-7.

(d) Prestressed Concrete Piles (Pretensioned): The piles shall be manufactured in accordance with the provision of Article 5.14.03, except as follows:

(1) Forms: The forms for the piles shall be of substantial construction and shall produce a uniformly smooth surface on all formed sides. A minimum concrete cover of 2 inches (50 millimeters) shall be maintained for prestressing elements by the use of spreaders or by bundling in areas adjacent to openings or inserts. Ties shall also have a minimum cover of 2 inches (50 millimeters) at these locations. Side forms carrying no load may be removed after 24 hours with the permission of the Engineer or after the concrete has reached the minimum transfer strength as required by Subarticle M.09.02-6.

(2) Finishing: The topside surface of the piles shall be given a uniformly smooth steel trowel finish to match the surface of the formed sides. The prestressing elements shall be cut flush or recessed 1/8 inch (3 millimeters) to the top of the pile. Projecting fins and surface imperfections shall be removed in a workmanlike manner. Exposed jet pipe connections, inserts or other devices shall be removed or recessed to a depth as directed, and the hole or opening patched with non-shrink grout in a workmanlike manner. The patching material shall have a degree of finish comparable to the adjacent surfaces. Additional finishing of piles, if required, shall be as shown on the plans or as otherwise directed.

(3) Handling and Storage: Care shall be taken during storage, transporting, hoisting and handling of the prestressed piles to prevent cracking or damage. Damaged piles shall be replaced by the Contractor at his expense. Lifting and support points shall be marked on the piles as required.

(4) Pile Extensions: Pile extensions shall normally be fabricated for this purpose in accordance with the specifications. However, sound sections of pile cutoffs or sound portions of rejected piles may be used, subject to the approval of the Engineer. Short pile extensions may, with the permission of the Engineer, be cast-in-place monolithically with the footing or cap.

2. Pile Driving Equipment:

(a) Hammers: Piles shall be driven with approved air, steam, diesel, or hydraulic hammers or a combination of acceptable hammer and water jet. The plant and equipment furnished for air/steam hammers shall have sufficient capacity to maintain at the hammer, under working conditions, the volume and pressure specified by the manufacturer. The plant and equipment shall be equipped with accurate pressure gauges which are easily accessible to the Engineer. The valve mechanism and other parts of the hammer shall be properly maintained so that the length of stroke for a single-acting hammer and the number of blows per minute for a double-acting hammer will be obtained. The power plant for hydraulic hammers shall have sufficient capacity to maintain at the hammer, under working conditions, the volume and pressure specified by the manufacturer. The power plant and equipment shall be equipped with accurate pressure gauges which are easily accessible to the Engineer.

The size of hammer shall be adapted to the type and size of piles and the driving conditions. Unless otherwise specified, the minimum rated striking energy per blow for

hammers used shall be 7,000-foot pounds (9,500 joules) for driving timber piles; 15,000-foot pounds (20,000 joules) for driving steel piles and for driving shells for cast-in-place concrete piles; and 19,000-foot pounds (25,000 joules) for driving precast concrete piles and for driving prestressed concrete piles. The hammer model used for the driving of test piles shall be used for the driving of service or production piles, unless a change is authorized by the Engineer in writing. Hammers delivering an energy which the Engineer considers detrimental to the piles shall not be used.

Non-impact hammers, such as vibratory hammers, or driving aids such as jets, followers, pre-augered and prebored holes shall not be used unless either specifically permitted in writing by the Engineer or stated in the contract documents.

(b) Pile Hammer Approval: All pile driving equipment furnished by the Contractor shall be subject to the approval of the Engineer. All pile driving equipment shall be sized in such a way that the piles can be driven with reasonable effort to the ordered lengths without damage. Approval of pile driving equipment by the Engineer will be based on wave equation analysis and/or other judgments. In no case shall the driving equipment be used without written approval of the Engineer. Prerequisite to such approval, the Contractor shall submit to the Engineer the necessary pile driving equipment information and wave equation analysis at least 30 days prior to driving piles. The wave equation analysis shall be signed, sealed and dated by a Connecticut licensed Professional Engineer.

The criteria that the Engineer will use to evaluate the driving equipment consists of both the required number of hammer blows per foot (per 0.25 meters) as well as the pile stresses at the required ultimate pile capacity. The required number of hammer blows indicated by the wave equation at the ultimate pile capacity shall be between 36 and 180 blows per foot (29 and 147 blows per 0.25 meters) for the driving equipment to be acceptable. In addition, for the driving equipment to be acceptable the pile stresses which are indicated by the wave equation to be generated by the driving equipment shall not exceed the maximum driving stresses allowed by the governing design code stated in the contract documents.

During pile driving operations, the Contractor shall use the approved system. No variations in the driving system will be permitted without the Engineer's written approval. Any change in the driving system will only be considered after the Contractor has submitted the necessary information for a revised wave equation analysis.

If the Engineer determines the Contractor's hammer is unable to transfer sufficient energy to the pile, the hammer shall be removed from service until repaired to the satisfaction of the Engineer.

(c) Drive System Components and Accessories:

(1) Hammer Cushion: Impact pile driving equipment designed to be used with a hammer cushion shall be equipped with a suitable thickness of hammer cushion material to prevent damage to the hammer or pile and to insure uniform driving behavior. Hammer cushions shall be made of durable manufactured materials, provided in accordance with the hammer manufacturer's guidelines. Wood, wire rope, and asbestos hammer cushions are specifically disallowed and shall not be

used. A striker plate as recommended by the hammer manufacturer shall be placed on the hammer cushion to insure uniform compression of the cushion material. The hammer cushion shall be removed from the helmet and inspected prior to beginning pile driving at each structure or after each 100 hours of pile driving, whichever is less. The Contractor shall replace any hammer cushion whose thickness is less than 75% of the original thickness.

(2) Helmet: Piles driven with impact hammers require an adequate helmet or drive head to distribute the hammer blow to the pile head. The helmet shall be axially aligned with the hammer and the pile. The helmet shall be guided by the leads and not be free-swinging. The helmet shall fit around the pile head in such a manner as to prevent transfer of torsional forces during driving, while maintaining proper alignment of hammer and pile. For steel and timber piling, the pile heads shall be cut squarely and a helmet, as recommended by the hammer manufacturer, shall be provided to hold the axis of the pile in line with the axis of the hammer. For precast concrete and prestressed concrete piles, the pile head shall be plane and perpendicular to the longitudinal axis of the pile to prevent eccentric impacts from the helmet. For special types of piles, appropriate helmets, mandrels or other devices shall be provided in accordance with the manufacturer's recommendations so that the piles may be driven without damage.

(3) Pile Cushion: The heads of concrete piles shall be protected by a pile cushion. Pile cushions shall be made of plywood, hardwood, or composite plywood and hardwood materials. The minimum pile cushion thickness placed on the pile head prior to driving shall be at least 4 inches (100 millimeters). A new pile cushion shall be provided for each pile. In addition the pile cushion shall be replaced if, during the driving of any pile, the cushion is compressed more than one-half the original thickness or it begins to burn. The pile cushion dimensions shall match the cross sectional area of the pile top. The use of manufactured pile cushion materials in lieu of a wood pile cushion shall be evaluated on a case by case basis.

(4) Leads: Piles shall be supported in line and position with leads while being driven. Pile driver leads shall be constructed in a manner that affords freedom of movement of the hammer while maintaining alignment of the hammer and the pile to insure concentric impact for each blow. Leads may be either fixed or swinging type. Swinging leads, when used, shall be fitted with a pile gate at the bottom of the leads and, in the case of batter piles, a horizontal brace may be required between the crane and the leads. The pile section being driven shall not extend above the leads. The leads shall be adequately embedded in the ground or the pile constrained in a structural frame such as a template to maintain alignment. The leads shall be of sufficient length to make the use of a follower unnecessary, and shall be so designed as to permit proper alignment of batter piles.

(5) Followers: Followers shall only be used when approved in writing by the Engineer, or when specifically stated in the contract documents. In cases where a follower is permitted, the first pile in each bent and every tenth pile driven thereafter shall be driven full length without a follower, to determine that adequate pile penetration is being attained to develop the ultimate pile capacity. The follower and pile shall be held and maintained in equal and proper alignment during driving. The follower shall be of such material and dimensions to permit the piles to be driven to the penetration depth

determined necessary from the driving of the full length piles. The final position and alignment of the first two piles installed with followers in each substructure unit shall be verified to be within the required location tolerances before additional piles are installed.

(6) Jets: Jetting shall only be permitted if approved in writing by the Engineer or when specifically stated in the contract documents. When jetting is not required in the contract documents, but approved after the Contractor's request, the Contractor shall determine the number of jets and the volume and pressure of water at the jet nozzles necessary to freely erode the material adjacent to the pile without affecting the lateral stability of the in place pile. When jetting is specifically required in the contract documents, the plant shall have sufficient capacity to deliver at all times at least 100 psi (700 kilopascals) pressure at two 3/4-inch (19 millimeter) jet nozzles. In either case, unless otherwise indicated by the Engineer, jet pipes shall be removed when the pile toe is a minimum of 5 feet (1.5 meters) above prescribed toe elevation and the pile shall be driven to the required ultimate pile capacity with an impact hammer. Also, the Contractor shall control, treat if necessary, and dispose of all jet water in a manner satisfactory to the Engineer and in accordance with the provisions of Article 1.10.

(7) Pre-Augering: When stated in the contract documents, the Contractor shall pre-auger holes at pile locations to the depths shown on the plans. Pre-augered holes shall be of a size smaller than the diameter or diagonal of the pile cross section; however, large enough to allow penetration of the pile to the specified depth. If subsurface obstructions, such as boulders or rock layers, are encountered, the hole diameter may be increased to the least dimension which is adequate for pile installation. Any void space remaining around the pile after completion of driving shall be filled with sand or other approved material. The use of spuds shall not be permitted in lieu of pre-augering. Augering, wet-rotary drilling, or other methods of pre-augering shall be used only when approved by the Engineer. When permitted, such procedures shall be carried out in a manner which will not impair the capacity of the piles already in place or the safety of existing adjacent structures. If the Engineer determines that pre-augering has disturbed the capacities of previously installed piles, those piles that have been disturbed shall be restored to conditions meeting the requirements of this specification by redriving or by other methods acceptable to the Engineer. Redriving or other remedial measures shall be instituted after the pre-augering operations in the area have been completed.

3. Pile Capacity

(a) Ultimate Pile Capacity: Piles shall be driven by the Contractor to the penetration depth shown on the plans or to a greater depth if necessary to obtain the ultimate pile capacity. The ultimate pile capacity shall be as defined in the contract documents.

Jetting or other methods shall not be used to facilitate pile penetration unless specifically permitted in the contract documents or in writing by the Engineer. The ultimate pile capacity of jetted piles shall be based on driving resistances recorded during impact driving after the jet pipes have been removed. Jetted piles not attaining the ultimate pile capacity at the ordered length shall be spliced, as

required, at the Contractor's cost, and driven with an impact hammer until the ultimate pile capacity is achieved.

The ultimate pile capacity of piles driven with followers shall only be considered acceptable when the follower driven piles attain the same pile toe elevation or top of bedrock elevation as required for the full length piles driven without followers that attained the required ultimate pile capacity.

(b) Wave Equation: The ultimate pile capacity shall be determined by the Engineer. Piles shall be driven with the approved driving equipment to the ordered length or other lengths necessary to obtain the required ultimate pile capacity. Jetting or other methods to facilitate pile penetration shall not be used unless specifically permitted either in the contract documents or approved by the Engineer after a revised driving resistance is established from the wave equation analysis. Adequate pile penetration shall be considered to be obtained when the specified wave equation resistance criteria is achieved within 5 feet (1.5 meters) of the pile toe elevation, based on ordered length. Piles not achieving the specified resistance within these limits shall be driven to penetrations established by the Engineer.

(c) Static Load Tests: Compression load tests shall be performed by procedures set forth in ASTM D-1143 using the quick load test method, except that the test shall be taken to plunging failure or the capacity of the loading system. Testing equipment and measuring systems shall conform to ASTM D-1143, except that the loading system shall be capable of applying 150% of the ultimate pile capacity as stated in the contract documents, and that a load cell and spherical bearing plate shall be used. The apparatus shall be constructed to allow the various increments of the load to be placed gradually, without causing vibration to the test pile. The Contractor shall submit to the Engineer for approval working drawings of the loading apparatus in accordance with Article 1.05.02. When the approved method requires the use of tension (reaction) piles, the tension piles, when feasible, shall be of the same type and diameter as the production piles, and shall be driven in the location of permanent piles except that timber or tapered piles installed in permanent locations shall not be used as tension piles.

The top elevation of the test pile shall be determined immediately after driving and again just before load testing to check for heave. Any pile which heaves more than 1/4 inch (6 millimeters) shall be redriven or jacked to the original elevation prior to testing. Unless otherwise specified in the contract, a minimum 3-day waiting period shall be observed between the driving of any anchor piles or the load test pile and the commencement of the load test.

On completion of the load testing, any test or anchor piling not a part of the finished structure shall be removed or cut off at least 1 foot (300 millimeters) below either the bottom of footing or the finished ground elevation, if not located within the footing area.

(d) Dynamic Pile Driving Analysis (PDA) Test: Dynamic measurements following procedures set forth in ASTM D-4945 will be taken during the driving of piles designated as dynamic monitoring test piles. The Contractor shall employ a qualified specialty Consultant, which has successfully completed no less than ten

dynamic pile driving tests, to perform the testing and report preparation for all Dynamic Pile Driving Analysis (PDA) Tests to be performed.

At least thirty days prior to driving the test piles the Contractor shall submit to the Engineer for review and approval the qualified specialty consultant, as well as the complete installation, and testing procedures. The submittal shall include all necessary pile driving equipment and support facilities to drive the piles to capacities and depths shown on the plans within allowable stress limits. As part of the submittal the Contractor's Consultant shall perform a wave equation analyses, and a summary report confirming that the pile driving system proposed by the Contractor can meet the capacity, driving resistance and allowable stress limits.

All equipment necessary for the dynamic monitoring of the piles such as gages, cables, etc., shall be furnished by the Contractor's Consultant. The equipment shall conform to the requirements of ASTM D-4945, Standard Test Method for High Strain Dynamic Testing of Piles, and be capable of testing the pile to one and one-half times the ultimate pile capacity. An experienced engineer, who has successfully completed no less than ten dynamic pile driving tests, shall operate the Pile Driving Analyzer in the field. The Contractor shall furnish a shelter within 100 feet (30 meters) of test location(s) to protect the dynamic test equipment from the elements. The shelter shall be a minimum floor size of 400 square feet (40 square meters), with a minimum ceiling height of 7 feet (2 meters), and an inside temperature maintained between 50° and 85°F (10° and 29°C).

The Contractor shall provide power to the test pile locations for the duration of the dynamic testing. The power supply shall consist of a power source providing 115-Volt alternating current with a frequency of 60 Hz and a minimum of 2 kilowatts. If field generators are used as the power source, provide functioning meters to monitor power voltage and frequency. Direct current welders or non-constant power sources are unacceptable.

Prior to lifting the pile to be dynamically tested, the Contractor shall provide as a minimum 3 feet (1 meter) of clear access to 180 degree opposite faces of the pile for pile preparation. The Contractor or its Consultant shall then drill and prepare holes in the pile for gage attachment.

The Contractor or its Consultant shall attach the gages to the pile before driving the piles. Pile driving shall be performed using routine pile installation procedures. When the level of the gages is within 1 foot (300 millimeters) of the ground surface, or obstruction, driving shall be halted to remove the gages from the pile. If additional driving is required, the pile shall be spliced and gages shall be reattached to the head of the next pile segment.

With the dynamic testing equipment attached, the Contractor shall drive the pile to the design penetration depth or to a depth determined by the Engineer. The Engineer will use the ultimate pile capacity estimates at the time of driving and/or restriking from dynamic test methods to determine the required pile penetration depth for the ultimate pile capacity. The stresses in the piles will be monitored during driving with the dynamic test equipment to ensure that the actual driving stresses do not exceed the maximum allowed values. If necessary, the Contractor

shall reduce the driving energy transmitted to the pile by using additional cushions or reducing the energy output of the hammer in order to maintain driving stresses below the maximum values. If non-axial driving is indicated by dynamic test equipment measurements, the Contractor shall immediately realign the driving system.
After the initial drive of the pile, the Contractor shall wait 24 hours, or the time specified in the contract documents, and restrike the dynamic monitoring test pile with the dynamic testing instruments attached. A cold hammer shall not be used for the restrike. The hammer shall be warmed up before restrike begins by applying at least 20 blows to another pile. The maximum amount of penetration required during restrike shall be 6 inches (150 millimeters), or 50 hammer blows, whichever occurs first.

The Contractor's Consultant shall provide preliminary estimates of pile capacity of the test pile to the Engineer within 24 hours of the restrike of each tested pile. The Contractor's Consultant shall also prepare and submit a written report within 5 calendar days of the completion of the testing. This report shall contain a discussion of the pile capacity obtained from the dynamic testing. CAPWAP analyses of the dynamic testing data shall be performed on data obtained at the end of initial driving and the beginning of restrike. The Engineer may request additional analyses at selected pile penetration depths. The report shall also discuss hammer and driving system performance, driving stress levels, and pile integrity. The report is to be prepared, signed, sealed and dated by a Connecticut licensed Professional Engineer. No production piles can be driven until the report has been submitted and approved by the Engineer.

4. Test Piles and Order Lists: Test piles shall be driven at the locations shown on the plans and to the penetration depths specified by the Engineer. Test piles shall be driven to a driving resistance established by the Engineer at the estimated pile toe elevation. The Contractor shall excavate the ground at each test pile to the elevation of the bottom of the footing before the pile is driven. All test piles shall be driven with impact hammers unless specifically stated otherwise in the plans. In general, the specified length of test piles will be greater than the estimated length of production piles in order to provide for variation in soil conditions. The driving equipment used for driving test piles shall be identical to the equipment proposed for driving the production piling. Approval of driving equipment shall conform to the requirements of these Specifications.

Test piles that do not attain the specified driving resistance at a depth of 6 inches (150 millimeters) above the estimated pile tip elevation, or are specified as a dynamic monitoring pile, shall be redriven after being allowed to set up. The minimum time period before restrike shall be 24 hours, or as specified in the contract documents. A cold hammer shall not be used for the restrike. The hammer used shall be warmed up by applying at least 20 blows to another pile.

Unless otherwise specified in the contract documents, the Contractor shall not order piling to be used in the permanent structure until test pile data has been reviewed and pile order lengths are authorized by the Engineer. The Engineer will provide the pile order list after completion of the test pile(s) and dynamic pile driving analysis (PDA) tests and/or pile loading tests specified in the contract documents.

When no test piles are specified for a substructure, the estimated pile lengths in the contract documents are taken as the pile order length.

The lengths given in the order list will be based on the lengths which are assumed after cutoff to remain in the completed structure. The Contractor shall, without added compensation, increase the lengths to provide for fresh heading and for such additional length as may be necessary to suit the Contractor's method of operation.

5. Pile Preparation and Driving: The heads of all piles shall be plane and perpendicular to the longitudinal axis of the pile before the helmet is attached. Approval of a pile hammer relative to driving stress damage shall not relieve the Contractor of responsibility for piles damaged because of misalignment of the leads, failure of cushion materials, failure of splices, malfunctioning of the pile hammer, or other improper construction methods. Piles damaged for such reasons shall be rejected and replaced at the Contractor's expense when the Engineer determines that the damage impairs the strength of the pile.

If it becomes necessary and is authorized by the Engineer to resort to jetting, spudding or pre-holing — and further, if no contract bid price is asked for in the proposal for jetting, spudding, or pre-holing — such work will be paid for as "extra work" in accordance with Articles 1.04.05 and 1.09.04.

The use of a hammer with a greater mass, or the use of piles manufactured or designed with pile tips of a nature to provide for better penetration such as but not limited to composite shells, tapered sections or H-pile sections, shall not be considered as extra work. Authorized point reinforcement for piles shall be a separate item.

Piles for exposed pile bents shall be driven with pile driver leads and templates. They shall be of rigid design and construction and shall maintain the required position and alignment of the piles within the tolerances hereinafter specified. Templates shall be anchored or spudded into position, shall be capable of guiding all piles required for the bent and shall remain in place until all the piles in the bent are driven.

(a) Location and Alignment Tolerance: Piles shall be driven with a variation of not more than 1/4 inch per foot (20 millimeters/meter) from the vertical or from the batter line indicated, except that piles for trestle bents shall be so driven that the cap may be placed in its proper location without inducing excessive stresses in the piles. Upon completion of driving and released from leads, exposed piles such as in bents shall not have a variation of more than 2 inches (50 millimeters) at the cut-off elevation from the position shown on the plans. Unless otherwise permitted in writing by the Engineer, failure to meet this tolerance shall be cause for rejection. Other foundation piles shall not be out of the position shown on the plans more than 6 inches (150 millimeters) after driving. The Engineer may require that driving be stopped in order to check the pile alignment. Pulling laterally on piles to correct misalignment, or splicing a properly aligned section on a misaligned section shall not be permitted.

If the location and/or alignment tolerances specified are exceeded, the extent of overloading shall be evaluated by the Engineer. If in the judgment of the Engineer, corrective measures are necessary, suitable measures shall be designed and constructed by the Contractor.

(b) Heaved Piles: Level readings to measure pile heave after driving shall be made by the Contractor at the start of pile driving operations and shall continue until the Engineer determines that such checking is no longer required. Level readings shall be taken immediately after the pile has been driven and again after piles within a radius of 15 feet (4.5 meters) have been driven. If pile heave is observed, the Contractor shall take accurate level readings referenced to a fixed datum on all piles immediately after installation and periodically thereafter as adjacent piles are driven to determine the pile heave range. All piles that have been heaved more than ¼ inch (6 millimeters) shall be redriven at the Contractor's cost, to the required resistance or penetration. Concrete shall not be placed in pile casings until pile driving has progressed beyond a radius of 15 feet (4.5 meters) from the pile to be concreted. If pile heave is detected for pipe or shell piles which have been filled with concrete, the piles shall be redriven to original position after the concrete has obtained sufficient strength and a proper hammer-pile cushion system, satisfactory to the Engineer, is used.

(c) Installation Sequence: The order of placing individual piles in pile groups shall be either starting from the center of the group and proceeding outwards in both directions or starting at the outside row and proceeding progressively across the group.

6. Unsatisfactory Piles: The method used in driving piles shall not subject the piles to excessive or undue abuse producing crushing and spalling of concrete, injurious splitting, splintering, and brooming of the wood, or deformation of the steel. Misaligned piles shall not be forced into proper position. Any pile damaged during driving by reason of internal defects, or by improper driving, or driven out of its proper location, or driven below the designated cutoff elevation, shall be corrected by the Contractor by a method approved by the Engineer.

Piles which have been bent during installation shall be considered unsatisfactory unless the ultimate capacity is proven by load tests performed at the Contractor's expense. If such tests indicate inadequate capacity, corrective measures as determined by the Engineer shall be taken, such as use of bent piles at reduced capacity, installation of additional piles, strengthening of bent piles, or replacement of bent piles.

A concrete pile will be considered defective if a visible crack, or cracks, appears around the entire periphery of the pile, or if any defect is observed which, as determined by the Engineer, affects the strength or life of the pile.

7. Splicing Piles and Extensions: Full length piles shall be used when practicable; but if splices cannot be avoided, piles or shells for cast-in-place piles may be spliced in accordance with the requirements of the plans. Piles shall not be spliced except with the approval of the Engineer. Splices in excess of two per pile for timber, steel and cast-in-place concrete piles will not be permitted except with special permission of the Engineer. Only one splice per pile will be permitted in precast concrete or prestressed concrete piles. In the absence of splice details in the plans, piles or shells for cast-in-place concrete piles shall be spliced in accordance with the pile or shell manufacturer's recommendations, subject to the approval of the Engineer. Working Drawings for prefabricated splicing devices and their method of installation shall be submitted to the Engineer for review. All seams, joints and splices shall develop the full strength of the pile.

8. Point Reinforcement: When directed by the Engineer, the contractor shall point-reinforce piles. Such point-reinforcement shall be in accordance with the plans or as directed.

9. Cutoff Lengths: The pile head of all permanent piles and pile casings shall be cutoff at the elevation shown on the plans or as ordered by the Engineer. All cutoff lengths shall become the property of the Contractor, and shall be removed by the Contractor from the site of the work.

10. Painting Steel Piles and Steel Pile Shells: When steel piles or steel pile shells extend above the ground surface or water surface, they shall be painted as specified elsewhere in the contract documents or as ordered by the Engineer. This protection shall extend from an elevation 2 feet (600 millimeters) below the ground or water surface to the top of the exposed steel.

11. Welding on Piles: When required or permitted, all welding on piles shall be done in accordance with the requirements of the current AWS Structural Welding Code.

7.02.04—Method of Measurement

1. Steel Piles-Timber Piles-Precast Concrete Piles: The length of (type) piles which will be the basis for the pay computation to be included under the item of furnishing (type) piles, shall be number of linear feet (meters) of (type) piles authorized by the Engineer or actually furnished by the Contractor, whichever is the lesser amount.

Length of pile cutoffs previously paid for under authorized lengths of piles and subsequently incorporated into the work will not be measured for payment.

The work, materials, tools, equipment and labor incidental to the disposal of pile cutoffs will not be measured for payment.

The amounts to be included under the item for driving (type) piles will be the number of linear feet (meters) of piles actually driven and accepted in the completed structure.

2. Cast-in-Place Concrete Piles: The amount to be included under the item of cast-in-place concrete piles shall be the number of linear feet (meters) of piles actually driven and accepted in place in the completed structure.

Cut-off materials from shells shall remain the property of the Contractor. They will be paid for in accordance with the unit cost applying in the Contractor's bill or bills for such shells, except that no payment will be made of material cut off from shells furnished by the Contractor in excess of the ordered length. The unit of measurement will be the unit applying in the Contractor's bill or bills for such shells. Material cut off from shells furnished by the Contractor in lengths in excess of those ordered by the Engineer will not be measured for payment hereunder. The work, materials, tools, equipment and labor incidental to the disposal of cutoffs will not be measured for payment.
Reinforcement, if required in cast-in-place concrete piles, will not be measured for payment.

3. Prestressed Concrete Piles (Pretensioned): The length of the prestressed concrete piles, which will be the basis for the pay computation, shall be the number of linear feet (meters) of piles authorized by the Engineer or actually furnished by the Contractor, whichever is the lesser amount. The length of any specified pile tip protruding from the concrete will be included in the length measured for payment.

Also included in the length measured for payment will be the length of precast pile extensions ordered by the Engineer. Not to be included, however, is the length of pile extension furnished in excess of the ordered length. The length of projection dowels shall not be included in the length measured for payment.

Extensions to prestressed concrete piles which are poured monolithically with the footing or pier cap will be paid for at the Contract unit prices for the several items involved, which prices shall be full compensation for all materials, tools, equipment and labor necessary to the completion of the work.

Cut-offs shall not be used for pile extension. The work, material, tools equipment and labor incidental to the disposal of cutoffs will not be measured for payment.

The amounts to be included under the item for driving prestressed concrete piles shall be the number of linear feet (meters) of piles actually driven and accepted in the completed structure.

4. Test Piles: The amounts to be included under the respective items for test piles, of the type and length specified, shall be the number of test piles actually driven and accepted. Lengths of test piles ordered by the Engineer in excess of the length or lengths specified in the contract will be measured for payment by the actual number of linear feet (meters) ordered, furnished and accepted by the Engineer. Driving of such pile extensions will be measured for payment by the actual length driven and left in place.

Authorized splices performed on test piles will be measured for payment by the number of authorized splices actually completed and accepted. Splicing of test piles shall not be considered as authorized splices when such splicing is done to complete piles to the test pile length specified in the contract.

5. Static Load Tests: The amount to be included under the item of static loading tests shall be the actual number of static load tests completed and accepted.

6. Dynamic Pile Driving Analysis (PDA) Test: The amount to be included under this item shall be the actual number of piles which are driven and restruck with dynamic monitoring equipment attached, completed and accepted
.

7. Splices: The amount to be included under the items for splicing timber, steel, cast-in-place concrete, precast concrete and prestressed concrete piles (pretensioned) shall be the number of authorized pile splices actually completed and accepted.
The splicing of timber and steel piles, steel shells for cast-in-place concrete piles, precast concrete piles and prestressed concrete piles (pretensioned) shall not be considered as authorized splices when such splicing is performed to complete piles to the order lengths, as defined in Subarticle 7.02.03-7, or when the furnished lengths of such piles are less than the order lengths approved by the Engineer.

8. Point Reinforcement for Piles: The amount to be included under the item of "Point Reinforcement for Piles" for the type of piles specified shall be the number of authorized reinforced points actually completed and accepted.

9. Pre-Augering of Piles: The amount to be included under the item “Pre-Augering of Piles” shall be the number of linear feet (meters) of pre-augering completed and accepted by the Engineer.

7.02.05--Basis of Payment: This work will be paid for as follows:

1. Steel Piles: Payment for furnishing steel piles of the lengths authorized will be at the Contract unit price per pound (kilogram) for "Furnishing Steel Piles," which price shall include furnishing, delivery, storage and handling, and all materials, equipment, tools and labor incidental thereto. The weight (mass) of steel pile caps will be included with and paid for under this item.

Payment for driving steel piles will be at the contract unit price per linear foot (meter) for "Driving Steel Piles," complete in place, which price shall include all materials, equipment, tools and labor incidental thereto.

2. Timber Piles: Payment for furnishing timber piles or treated timber piles, up to a length 10 feet (3 meters) greater than that specified on the plans or in the proposal form, will be at the Contract unit price per foot (meter) for "Furnishing Timber Piles (‘ Length)" and "Furnishing Treated Timber Piles (‘ Length)," respectively, which price shall include furnishing, delivery, peeling, storage and handling, and all materials, equipment, tools and labor incidental thereto.

In case the length of any piles finally ordered is more than 10 feet (3 meters), but less than 20 feet (6 meters), greater than the length specified on the plans or proposal form, payment for furnishing such piles shall be at a price per linear foot (meter) equal to the original contract price, plus 20 percent thereof.

In case the length of any piles finally ordered is 20 feet (6 meters) or more greater than the length specified on the plans or proposal form, payment for furnishing such piles shall be at a price per linear foot (meter) equal to the original contract price plus 40 percent thereof.

Payment for driving timber piles or treated timber piles will be at the contract unit price per linear foot (meter) for "Driving Timber Piles" and "Driving Treated Timber Piles," respectively, complete in place and regardless of length, which price shall include all materials, equipment, tools and labor incidental thereto.

3. Cast-in-Place Concrete Piles: Payment for cast-in-place concrete piles will be at the contract unit price per linear foot (meter) for "Cast-in-Place Concrete Piles," complete in place, including all materials, equipment, tools and labor incidental thereto.

Cut-off materials from shells shall remain the property of the Contractor. They will be paid for in accordance with the unit cost applying in the Contractor's bill or bills for such shells, except that no payment will be made for material cut off from shells furnished by the Contractor in excess of the ordered length.

4. Prestressed Concrete Piles: Payment for furnishing prestressed concrete piles, of the lengths required, will be at the contract unit price per linear foot (meter) for "Furnishing Prestressed Concrete Piles" of the type and size as shown on the plans, which price shall include furnishing, delivery, storage and handling, and all materials, equipment, tools and labor incidental thereto.

Payment for driving prestressed concrete piles will be at the contract unit price per linear foot (meter) for "Driving Prestressed Concrete Piles," complete in place, which price shall include all material, equipment, tools and labor incidental thereto. Also included shall be all work involved in cutting piles to the direct cut-off elevation.

5. Test Piles: Test piles will be paid for at the contract unit price each for "Test Pile," of the type and length specified, which price shall constitute the complete compensation for furnishing and driving test piles and shall include all materials, equipment, tools and labor incidental thereto. Authorized splices to test piles will be paid for at 200 percent of the contract unit price bid for Splicing Timber Piles, Splicing Steel Piles, Splicing Cast-in-Place Piles or Splicing Prestressed Concrete Piles, whichever type of test pile the splice has been performed on; and such payment shall be for all costs including materials, equipment, tools and labor incidental thereto.

Extension to test piles in excess of the specified length will be paid for on the following basis, which shall include all equipment, tools, splices, labor and work incidental thereto.

(a) Timber Test Piles: Extensions will be paid for at 125 percent of the contract unit price per linear foot (meter) for "Furnishing Timber Piles," of the shortest length specified in the proposal, and at 125 percent of the contract unit price per linear foot (meter) for "Driving Timber Piles."

(b) Steel Test Piles: Extensions will be paid for at 125 percent of the contract unit price per pound (kilogram) for "Furnishing Steel Piles" and at 125 percent of the contract unit price per linear foot (meter) for "Driving Steel Piles."

(c) Cast-in-Place Concrete Test Piles: Extensions will be paid for at 125 percent of the contract unit price per linear foot (meter) for "Cast-in-Place Concrete Piles." Cut-off materials from shells will be paid for as provided in Subarticle 7.02.05-3.

(d) Prestressed Concrete Test Piles: Extensions will be paid for at 125 percent of the contract unit price per linear foot (meter) for "Furnishing Prestressed Concrete Piles," and at 125 percent of the contract unit price per linear foot (meter) for "Driving Prestressed Concrete Piles."

6. Static Load Tests: Loading tests will be paid for at the contract unit price each for "Pile Loading Test," which price shall include all expenses incidental to loading the pile or group of piles and removing the load, platform, etc., upon completion of the test.

7. Dynamic Pile Driving Analysis (PDA) Test: Dynamic monitoring will be paid for at the contract unit price each for “Dynamic Pile Driving Analysis (PDA) Test” which price shall include complete compensation for each pile tested using a pile driving analyzer during driving and restrike, including all materials, equipment, tools and labor incidental thereto, as well as providing preliminary and summary report(s).

8. Splices: Authorized splices in timber, steel, cast-in-place piles, precast concrete and prestressed concrete piles will be paid for at the contract unit price each for "Splicing Timber Piles," "Splicing Steel Piles," "Splicing Cast-in-Place Concrete Piles," "Splicing Precast Concrete Piles," "Splicing Prestressed Concrete Piles," respectively, which price shall include all materials, except as otherwise noted, and all equipment, tools and labor incidental thereto. In the absence of such prices, authorized splices will be paid for as extra work.

9. Trimming and Cutting: There shall be no direct compensation for cutting off timber, steel, precast concrete or prestressed concrete piles and shells for cast-in-place concrete piles as ordered; but the cost thereof shall be considered as included in the cost of the pile items.

10. Point Reinforcement for Piles: Authorized points for pointing and reinforcing piles will be paid for at the contract unit price each for "Point Reinforcement for Timber Piles," or "Point Reinforcement for Steel Piles," respectively, whichever applies, which price shall include all materials, equipment, tools and labor incidental thereto. In the absence of such prices, authorized points will be paid for as extra work.

11. Pre-Augering of Piles: Payment for “Pre-Augering of Piles” will be at the contract unit price per linear foot (meter) for “Pre-Augering of Piles,” which price shall include which price shall include all materials, and all equipment, tools and labor incidental thereto.

12. Underground Obstructions: If the required pile penetration is not reached due to the presence of underground obstructions which are not the result of the Contractor's operations but are due to the presence of earlier construction at the site, then the cost of removing these obstructions and back-filling the area will be paid for as extra work unless otherwise specified in the contract documents.

13. Painting: There will be no additional payment for painting steel piles and steel pile shells, but the cost thereof shall be considered as included in the cost of furnishing and driving the piles.

14. Disposal of Pile Cutoffs: All costs incidental to the disposal of cutoff material will be included in the price of furnishing of the type of pile specified.

Pay Item	Pay Unit
Furnishing (Type) Piles (Lengths)	lb. (kg)
Driving (Type) Piles	l.f. (m)
Test Pile (Type-Length)	ea. (ea.)
Splicing (Type) Piles	ea. (ea.)
Point Reinforcement for (Type) Piles	ea. (ea.)
Pile Loading Test	ea. (ea.)
Dynamic Pile Driving Analysis (PDA) Test	ea. (ea.)
Pre-Augering of Piles	l.f. (m)

CONNECTICUT
SUPPLEMENTAL SPECIFICATION
SECTION 7.06
MICROPILES

Add the following section:

SECTION 7.06
MICROPILES

7.06.01 – Description
7.06.02 – Materials
7.06.03 – Construction Methods
7.06.04 – Method of Measurement
7.06.05 – Basis of Payment

7.06.01 - Description: This work shall consist of constructing micropiles in accordance with the Contract. The Contractor is responsible for furnishing all design, materials, products, accessories, tools, equipment, services, transportation, labor and supervision required for design, installation and testing of micropiles and micropile top attachments for this Project.

The Contractor shall select the micropile type, size, pile-top attachment, installation means and methods, and shall estimate the grout-to-ground bond value(s) and determine the required grout bond length and final micropile diameter.

The Contractor shall design and install micropiles that will develop the load capacities indicated on the plans. The micropile load capacities shall be confirmed by verification and proof-load testing as required and must meet the test acceptance criteria specified herein. The Contractor's micropile design shall conform to requirements set forth in this specification and to micropile design minimums/maximums shown on the Contract drawings.

7.06.02 - Materials: Furnish new materials without defects. Materials for micropiles shall comply with the following:

1. **Admixtures for Grout:** Admixtures shall comply with Article M.03.01 hereof. Accelerators are not permitted. Expansive admixtures and admixtures containing chlorides are not permitted.

2. **Cement:** Cement shall conform to ASTM C 150/AASHTO M85, Types II, III or V.

3. **Centralizers and Spacers:** Centralizers and spacers shall be fabricated from Schedule 40 PVC pipe.

4. **Grout:** Grout shall consist of neat cement or fine aggregate/cement mixture meeting the three (3) and twenty-eight-(28-)day required compressive strengths specified in the Contract. The grout shall conform to AASHTO T106/ASTM C109 and to any minimum and

maximum properties shown on the plans or in Article M.03.05.

5. **Permanent Casing Pipe:** Permanent steel casing or steel pipe shall conform to required minimum and maximum properties shown on the plans. The steel casing or steel pipe shall comply with one or more of the following specifications: ASTM A252 or A106, or API N-80.

6. **Reinforcing Bars:** Reinforcing steel shall be deformed bars in accordance with ASTM A615/AASHTO M31. Continuous spiral deformations (*i.e.*, continuous thread bars) shall be used for same. Bar tendon couplers, if required, shall develop the ultimate tensile strength of the bars without evidence of any failure.

7. **Encapsulation:** Encapsulation (double corrosion protection) shall be shop-fabricated using high-density, corrugated polyethylene tubing complying with the requirements of ASTM D3350/AASHTO M252 with a nominal wall thickness of 0.03 in (0.8 mm). The inside annulus between the reinforcing bar(s) and the encapsulation tube shall measure a minimum 0.2 in (5 mm) and be fully grouted with non-shrink grout conforming to Section M.03.

7.06.03 - Construction Methods:

1. **Contractor's Experience Requirements:** The micropile Contractor shall be experienced in the construction and load testing of micropiles, having successfully constructed at least five (5) projects in the last five (5) years involving construction totaling at least one hundred (100) micropiles of capacity similar to that required of the ones in these plans and Specifications.

   The Contractor shall have previous micropile drilling and grouting experience in soil/rock conditions similar to those on this Project. The Contractor shall submit construction details, structural details and load test results for at least three (3) previous successful micropile load tests from different projects similar in scope to this Project.

   The Contractor shall assign or hire a professional engineer, licensed in the State of Connecticut, to supervise the micropile work. That engineer shall have experience on at least ten (10) projects of similar scope to this Project, completed over the past five (5) years. The Contractor shall not use manufacturers' representatives to satisfy the supervising engineer requirements of this Section. The Contractor may use a single independent consultant for this purpose, provided that the consultant has specific experience as described above and operates specifically for the purpose of transferring technology and skills in micropiling to contractors. The on-Site foremen and drill rig operators shall also have experience on at least ten (10) projects over the past five (5) years installing micropiles of equal or greater capacity than is required in these plans and Specifications.

   The Contractor shall assign or hire a professional engineer, licensed in the State of Connecticut, to design the micropiles. This engineer shall have experience in the design of at least three (3) successfully-completed micropile projects over the past five (5) years, with micropiles of capacity similar to that required in these plans and specifications. This engineer shall also be responsible for design, supervision and reporting of the verification and proof test(s).

At least forty-five (45) calendar days before the planned start of micropile construction, the Contractor shall submit five (5) copies of the completed Project reference list and a personnel list. The Project reference list shall include a brief Project description with the owner's name and current phone number and load test reports. The personnel list shall identify the supervising Project Engineer, drill rig operators, and on-Site foremen to be assigned to this Project by the Contractor. The personnel list shall contain a summary of each individual's experience and be complete enough for the Engineer to determine whether each individual has the required qualifications.

Work shall not start, nor materials be ordered, until the Engineer gives written approval of the Contractor's experience qualifications. The Engineer may suspend work if the Contractor uses non-approved personnel on the Project. If work is suspended for that reason, the Contractor shall be fully liable for all resulting costs, and Department will not make any Contract time adjustments because of the suspension.

2. **Micropile Design Requirements and Submittals:** The micropiles shall be designed to meet the specific loading conditions, as shown on the plans and approved working drawings. The micropile design shall conform to all required minimum and maximum properties shown on the plans, the "American Association of State Highway and Transportation Officials (AASHTO) LRFD Bridge Design Specifications" (including the latest Interims), and the "Connecticut Department of Transportation Bridge Design Manual."

Where called for on the plans, the Contractor shall provide corrosion protection of the internal steel reinforcing bars, consisting of encapsulation, epoxy coating or grout. Where the permanent casing is used for a portion of the micropile, the corrosion protection shall extend at least 5 ft (1.5 m) into the casing. Steel pipe used for micropile permanent casing shall incorporate an additional 1/16 in (1.6 mm) thickness of sacrificial steel for corrosion protection.

The Contractor shall submit working drawings in accordance with Section 1.05 to the Engineer. The working drawings shall include all information required for the design, plans, construction and quality control of the micropile installation. The information shall include, but not necessarily be limited to, the following;

(a) Design Computations

I. A written summary report describing the overall micropile design.

II. A statement of applicable code requirements and design references.

III. Micropile structure critical design cross-section(s) geometry, including soil/rock strata and piezometric levels and location, magnitude and direction of applied loadings, including slope or external surcharge loads.

IV. A description of design criteria to be applied to the work, including, soil/rock shear strengths (friction angle and cohesion), unit weights, and grout-to-ground bond value(s) and micropile drill-hole diameter assumptions for each soil/rock stratum.

V. A statement of Resistance/Load factors used in the design of the grout-to-ground

bond value(s), surcharges, soil/rock and material unit weights, steel, grout and concrete materials.

VI. Design calculation sheets with the Project number, micropile structure location, designation, date of preparation, initials of designer and checker, and page number at the top of each page. Provide an index page for the design calculations.

VII. Design notes including a list of symbols and computer program used in the design.

VII. Pile-to-footing connection calculations.

(b) Plans

I. A plan view of the micropile structures providing:

i. A reference baseline and elevation datum.

ii. The offset from the construction centerline or baseline to the face of the micropile structure at all changes in horizontal alignment.

iii. Beginning and end of micropile structure stations.

iv. Right-of-way and permanent or temporary construction easement limits, location of all known active and abandoned utilities, adjacent structures or other potential interference; and the centerline of any drainage structure or drainage pipe behind, passing through or passing under the micropile structure.

v. Subsurface exploration locations shown on the plan view of the proposed micropile structure alignment with appropriate reference baselines to fix the locations of the exploration relative to the micropile structure.

II. An elevation view of the micropile structure(s) providing:

i. Elevation view showing micropile locations and elevations; vertical and horizontal spacing; batter and alignment and the location of drainage elements (if applicable).

ii. Existing and finished grade profiles both behind and in front of the micropile structure.

III. Design parameters and applicable codes.

IV. General notes for constructing the micropile structure, including construction sequencing or other special construction requirements.

V. Horizontal and vertical curve data affecting the micropile structure and micropile structure control points. Match lines or other details to relate micropile structure stationing to centerline stationing.

VI. A listing of the summary of quantities on the elevation drawing of each micropile structure, showing pay item estimated quantities.

VII. Micropile typical sections, including micropile spacing and inclination; minimum drill-hole diameter; pipe casing and reinforcing bar size and details; splice type and locations; centralizers and spacers; grout bond zone and casing plunge length (if used); corrosion protection details; and connection details to the substructure footing, anchorages and plates.

VIII. A typical detail of verification and production proof test micropiles defining the micropile length, minimum drill-hole diameter, inclination, and load test bonded and unbonded test lengths.

IX. Details, dimensions and schedules for all micropiles, casing and reinforcing steel, including reinforcing bar bending details.

X. Details for constructing micropile structures around drainage facilities (if applicable).

(c) Construction Procedures

I. Detailed step-by-step description of the proposed micropile construction procedure, including personnel, testing and equipment to ensure quality control. This step-by-step procedure shall be shown in sufficient detail to allow the Engineer to monitor the construction and quality of the micropiles.

II. Proposed start date, time schedule and micropile installation schedule providing the following:

i. Micropile number.

ii. Micropile design load.

iii. Type and size of rebar.

iv. Minimum total bond length.

v. Total micropile length.

vi. Micropile top footing attachment.

III. If welding of casing is proposed, submit the welding procedure. All welding shall be done in accordance with the current AWS Structural Welding Code.

IV. Information on space requirements for installation equipment that verify the proposed equipment can perform at the Site.

V. Proposed plan describing how surface water, drill flush, and excess waste grout will be controlled and disposed. This will include computations showing that the proposed equipment used for flushing the micropile during installation (*i.e.*, pumps for water flushing and compressors for air flushing) will maintain up-hole (flushing) velocities necessary to ensure that all of the flush and drill cuttings are returned up through the annulus between the drill rod and casing.

VI. Certified mill test reports for the reinforcing steel and for permanent casing. The ultimate strength, yield strength, elongation, and material properties composition shall be included. For API N-80 pipe casing, coupon test results may be submitted in lieu of mill certification.

VII. Proposed Grouting Plan. The grouting plan shall include complete descriptions, and details for the following:

a. Grout mix design and type of materials to be used in the grout, including certified test data and trial batch reports. The Contractor shall also provide specific gravity of the wet mix design.

b. Methods and equipment for accurately monitoring and recording the grout depth and grout volume as the grout is being placed.

c. Estimated curing time for grout to achieve specified strength. Previous test results for the proposed grout mix completed within one (1) year of the start of grouting may be submitted for initial verification and acceptance and start of production work. During production, grout shall be tested in accordance with Article M.03.05.

d. Procedure and equipment for Contractor monitoring of grout quality. At a minimum, the Contractor shall be required to use a Baroid Mud Balance (per API RP-13B-1) to check the specific gravity of the mixed grout prior to placement into each drilled micropile.

(d) Detailed plans for the proposed micropile load testing method. This shall include all drawings, details, and structural design calculations necessary to clearly describe the proposed test method, reaction load system capacity and equipment setup, types and accuracy of apparatus to be used for applying and measuring the test loads and pile top movements in accordance with this Specification.

(e) Calibration reports and data for each test jack, pressure gauge and master pressure gauge and electronic load cell to be used. The calibration tests shall have been performed by an independent testing laboratory within ninety (90) calendar days of the date submitted. Testing shall not commence until the Engineer has reviewed and accepted the jack, pressure gauge, master pressure gauge and electronic load cell calibration data.

Work shall not begin until the construction submittals have been received, reviewed, and accepted in writing by the Engineer. Any submittals found to be unacceptable by the Engineer shall be revised, resubmitted and accepted prior to commencing work.

3. Pre-construction Meeting: A pre-construction meeting will be scheduled by the Engineer and held prior to the start of micropile construction. The Engineer, prime Contractor, micropile specialty Contractor and micropile design engineer shall attend the meeting. Attendance is mandatory. The pre-construction meeting will be conducted in order to clarify the construction requirements for the work, to coordinate the construction schedule and activities, and to identify contractual relationships and delineation of responsibilities among the prime Contractor and the various subcontractors - specifically those pertaining to

excavation for micropile structures, installation of temporary sheeting, anticipated subsurface conditions, micropile installation and testing, micropile structure survey control and Site drainage control.

4. **Site Drainage Control:** The Contractor shall control and properly dispose of drill flush and construction related waste, including excess grout, in accordance with Section 1.10, any related Special Provisions in the Contract, and all applicable codes and regulations. Drill flush shall be conveyed by pipe, hose or conduit away from the location where the micropile is being drilled and away from any adjacent structure or facility. The Engineer will determine the acceptable distance required to convey the drill flush away from the micropile location. The Contractor shall provide positive control and discharge of all surface water that will affect construction of the micropile installation; maintain all pipes or conduits used to control surface water during construction; and repair any damage caused by surface water at no additional cost to the Department. Upon substantial completion of the work, the Contractor shall remove surface water control pipes or conduits from the Site. Alternatively, with the approval of the Engineer, the Contractor may leave pipes or conduits in place if fully grouted.

The Contractor shall immediately contact the Engineer if unanticipated existing subsurface drainage structures or other utilities are discovered during excavation or drilling; and shall suspend work in such areas until remedial measures meeting the Engineer's approval are implemented.

5. **Micropile Allowable Construction Tolerances:**

   (a) Centerline of piling shall not be more than 3 in (75 mm) from indicated plan location. Centerline of reinforcing steel shall not be more than 0.5 in (13 mm) from the centerline of the pile.

   (b) Pile shall be plum or battered within two percent (2%) of total-length plan alignment.

   (c) Top elevation of pile shall be plus 1 in (25 mm) or minus 1 in (25 mm) maximum from vertical elevation indicated.

6. **Micropile Installation:** The micropile Contractor shall select the drilling method, the grouting procedure and the grouting pressure used for installation of the micropiles. The micropile Contractor shall also determine the micropile casing size, final drill-hole diameter and bond length, and central tendon reinforcement steel size necessary to develop the specified load capacities and load testing requirements. All micropile material properties and dimensions shall conform to minimum/maximum properties and dimensions as shown in the Contract drawings. The micropile Contractor is also responsible for estimating the grout take. The Department will make no extra payment for grout overruns.

   Should the plans require uncased drilling of the micropile into bedrock, the permanent or temporary casing shall be drilled a minimum 6 in (150 mm) into ledge or to a depth within the ledge so as to prevent subsidence of overburden into the uncased and bonded zone portion of the drill-hole (*i.e.*, the rock socket). The plans show estimated permanent casing lengths for each substructure unit. Any difference in the required length of permanent casing accepted by the Engineer from the estimated lengths shown on the plans shall be

measured for payment and credit. The Department will make no payment for differences in required length of temporary casing.

The drilling equipment and methods shall be suitable for drilling through the conditions to be encountered, without causing damage to the overburden, any overlying or adjacent structures, buried structures, utilities or services. If called for in the drilling method description, or by the nature of the stratum to be drilled through, the micropile Contractor shall furnish an overburden casing of the type and thickness that can be installed without distortion. Casings that fail, fracture, or otherwise distort during drilling or after drilling shall, unless otherwise directed, be withdrawn or replaced at the micropile Contractor's expense. The drill-hole must be open along its full length to at least the design minimum drill-hole diameter prior to placing grout and reinforcement.

Temporary casing or other approved method of pile drill-hole support will be required in caving or unstable ground in order to permit the pile shaft to form a drill hole of the minimum design diameter. The Contractor's proposed method(s) to provide drill-hole support and to prevent detrimental ground movements must be reviewed by the Engineer in advance of its use. Detrimental ground movement is defined as movement that requires remedial repair measures, in order to maintain Site conditions as determined by the Engineer.

Drilling and flushing methods shall be selected by the Contractor. Use of drilling fluid containing bentonite or any other non-reverting drilling fluid, however, is not allowed. The drilling and flushing system chosen by the Contractor shall be capable of providing the necessary up-hole velocity so as to ensure that all the flush and drill cuttings are returned up through the annulus between the drill rod and casing. The flush must not be allowed to escape in an uncontrollable fashion into the soil and rock formations outside the casing. The return flush must never be blocked or suppressed within the casing on its way back to the surface. The Contractor shall monitor and modify, as needed, the flush velocity and other elements of its drilling methods that could contribute to return of flush outside the casing. When return of flush is substantially lost during drilling, the Contractor shall halt drilling operations and immediately notify the Engineer of the situation.

During construction, the Contractor shall observe the ground conditions in the vicinity of the micropile construction site on a daily basis for signs of ground heave or subsidence, and must immediately notify the Engineer if signs of movements are observed. The micropile Contractor shall immediately suspend or modify drilling or grouting operations if ground heave or subsidence is observed, if the micropile structure is adversely affected, or if adjacent structures are damaged because of the drilling or grouting. If the Engineer determines that the movements require corrective action, the micropile Contractor shall take corrective actions necessary to stop the movement or perform repairs.

Reinforcement may be placed prior to grouting the drill-hole. Reinforcement surface shall be free of deleterious substances such as soil, mud, grease or oil that might contaminate the grout or coat the reinforcement and impair bond. Pile reinforcement groups, if used, shall be sufficiently strong to withstand the installation and grouting process without damage or disturbance.

The micropile Contractor shall check pile-top elevations and adjust all installed micropiles to the planned elevations.

Centralizers and spacers shall be provided at 10 ft (3 m) on center maximum spacing. The uppermost and lowest centralizers shall be located a maximum of 3 ft (0.9 m) from the top and bottom of the micropile. Centralizers and spacers shall be securely attached to the reinforcement, sized to position the reinforcement within 1/2 in (12 mm) of plan location from center of pile, sized to allow grout tremie pipe insertion to the bottom of the drill-hole, and must be of sufficient size to allow grout to flow freely up the drill-hole, up the casing, and between adjacent reinforcing bars. The reinforcing steel shall be inserted into the drill-hole to the desired depth without difficulty. Partially inserted reinforcing bars shall not be driven or forced into the hole. The micropile Contractor shall re-drill and reinsert reinforcing steel when necessary in order to facilitate insertion.

Lengths of casing and reinforcing bars to be spliced shall be secured in proper alignment and in a manner that prevents eccentricity or an angle between the axes of the lengths to be spliced. Splices and threaded joints shall meet the requirements of the rebar material. Threaded pipe casing joints shall be located at least two (2) casing diameters (OD) from a splice in any reinforcing bar. When multiple bars are used, bar splices shall be staggered at least 1 ft (0.3 m).

Micropiles shall be grouted on the same day that the load transfer bond length is drilled. The grouting equipment used shall be a colloidal grout plant and shall produce a grout free of lumps and undispersed cement. Paddle type mixers are not acceptable. The micropile Contractor shall have means and methods of measuring the grout quantity and pumping pressures during the grouting operations. The grout pump shall be equipped with a pressure gauge to monitor grout pressure. A second pressure gauge shall be placed at the point of injection into the pile top. The pressure gauge shall be capable of measuring pressures of at least 145 psi (1000 kPa) or two (2) times the actual grout pressure used, whichever is greater. The grout shall be kept in agitation prior to mixing. Grout shall be placed within one (1) hour of mixing. The grouting equipment shall be sized to enable each pile to be grouted in one continuous operation. The grout shall be injected from the lowest point of the drill-hole, and injection shall continue until uncontaminated grout flows from the top of the pile. The grout may be pumped through grout tubes, casing, hollow stem augers or drill rods. Temporary casing, if used, shall be extracted in stages so as to ensure that, after each length of casing is removed, the grout level is brought back up to the ground level before the next length is removed. The tremie pipe or casing shall always extend below the level of the existing grout in the drill-hole. The grout takes shall be controlled to prevent excessive heave or fracturing of rock or soil formations. Upon completion of grouting, the grout tube may remain in the hole, but must be filled with grout.

If the Contractor elects to use a post-grouting system, working drawings and details shall be submitted to the Engineer for review in accordance with Section 1.05.

Grout within the micropile verification and proof test piles shall attain the minimum required three-(3-)day compressive strength prior to load testing. During production, micropile grout shall be tested by the Contractor for compressive strength in accordance with AASHTO T106/ASTM C109 at a frequency of no less than one (1) set of three (3) each 2 in (50 mm) grout cubes, or 3 in (75 mm) cylinders, from each grout plant each day of operation, or per every ten (10) micropiles, whichever occurs more frequently. The compressive strength shall be the average of the three (3) cubes or cylinders tested.

Grout consistency as measured by grout density shall be determined by the micropile Contractor per API RP-13B-1 at a frequency of at least one (1) test per pile, conducted just prior to start of pile grouting. The Baroid Mud Balance used in accordance with API RP-13B-1 is an approved device for determining the grout density of neat cement grout.

Provide grout cube or cylinder compressive strength and grout density test results to the Engineer within twenty-four (24) hours of testing.

7. **Micropile Installation Records:** The micropile Contractor shall prepare and submit to the Engineer full-length installation records for each micropile installed. The records shall be submitted within one (1) work shift after that pile installation is completed. The data shall be recorded on a micropile installation log. A separate log shall be provided for each micropile.

8. **Verification and Proof Tests:** The Contractor shall perform verification and proof testing of piles at the locations specified on the plans, and perform compression load testing in accord with ASTM D1143 and tension load testing in accord with ASTM D3689, except as modified herein. If the Contractor designs micropiles using tip resistance, it shall use ASTM 1143 for verification and proof tests thereof.

   The Contractor shall perform pre-production verification pile load test(s) to verify the design of the pile system and the construction methods proposed prior to installing any production piles. Sacrificial verification test pile(s) shall be constructed by the Contractor in conformance with the approved working drawings, and shall install verification test pile(s) at the location(s) shown on the plans or at location(s) approved by the Engineer.

   Verification load test(s) shall be performed in order to verify that the micropiles installed by the Contractor will meet the compression and tensile load capacities and load test acceptance criteria, and to verify that the length of the micropile load transfer bond zone is adequate. The micropile verification load test results must verify the Contractor's design and installation methods.

   The drilling method, grouting method, permanent casing length, micropile diameter (cased and uncased) and bond zone length for the verification test pile shall be identical to those specified for the production piles at the given locations. The verification test micropile structural steel sections shall be sized to safely resist the maximum test load.

   The maximum verification and proof test loads applied to the micropile shall not exceed eighty percent (80%) of the structural capacity of the micropile structural elements, including steel yield in tension, steel yield or buckling in compression, or grout crushing in compression. Any required increase in strength of the verification and proof test pile elements above the strength required for the production piles shall be provided for in the Contractor's bid price.

   Testing equipment used in connection with the micropiles shall include dial gauges, dial gauge independent reference frame, jack and pressure gauge, electronic load cell (with readout device), and a reaction frame. The load cell is required only for the creep test portion of the verification test. The Contractor shall provide a description of test setup and jack, pressure gauge and load cell calibration curves as outlined in the Submittals Section.

The Contractor shall design the testing reaction frame to be sufficiently rigid and of adequate dimensions to ensure that excessive deformation of the testing equipment does not occur; and must align the jack, bearing plates, and stressing anchorage so that unloading and repositioning of the equipment will not be required during the test.

The Contractor shall also apply and measure the test load with a hydraulic jack and pressure gauge. The pressure gauge shall be graduated in 100 psi (690 kPa) increments or less. The jack and pressure gauge shall have a pressure range not exceeding twice the anticipated maximum test pressure. Jack ram travel shall be sufficient to allow the test to be done without resetting the equipment. The Contractor shall monitor the creep-test-load-hold during verification tests with both the pressure gauge and the electronic load cell; and shall use the load cell in order to accurately maintain a constant load hold during the creep-test-load-hold increment of the verification test.

The Contractor shall measure the pile top movement with a dial gauge capable of measuring to 0.001 in (0.025 mm). The dial gauge shall have a travel sufficient to allow the test to be done without having to reset the gauge; and the Contractor shall visually align the gauge to be parallel with the axis of the micropile and support the gauge independently from the jack, pile or reaction frame. The Contractor shall also use a minimum of two (2) dial gauges when the test setup requires reaction against the ground or single reaction piles on each side of the test pile.

The Contractor shall test verification piles to the following loads: Alignment Load ("AL"), Maximum Service Limit Pile Load ("SVL") and the Ultimate Pile Capacity ("UPC"). The SVL and UPC loads are provided on the Contract drawings. The AL is the minimum load applied to the micropile during testing needed to keep the testing equipment correctly positioned. The AL shall not exceed five percent (5%) of the SVL. The verification pile load tests shall be made by incrementally loading the micropile in accordance with the cyclic load schedule shown in Table 7.06-1, for both compression and tension loading (test the compression prior to tension).

Table 7.06-1, Cyclic Load Schedule for Verification Pile Load Test

Step	Loading	Applied Load	Hold Time (minutes)
1	Apply AL	AL	2.5
2	Cycle 1	0.15 SVL	2.5
		0.30 SVL	2.5
		0.45 SVL	2.5
		0.60 SVL	2.5
		0.75 SVL	2.5
		0.90 SVL	2.5
		1.00 SVL	10 to 60 minutes
		0.60 SVL	2.5
		0.30 SVL	2.5
		AL	
3	Cycle 2	0.075 UPC	2.5
		0.150 UPC	2.5
		0.225 UPC	2.5
		0.300 UPC	2.5
		0.375 UPC	2.5
		0.450 UPC	2.5
		0.525 UPC	2.5
		0.600 UPC	2.5
		0.675 UPC	2.5
		0.750 UPC	2.5
		0.825 UPC	2.5
		0.900 UPC	2.5
		1.000 UPC	10 to 60 minutes
		0.750 UPC	2.5
		0.525 UPC	2.5
		0.225 UPC	2.5
		AL	

Pile-top movement shall be measured at each load increment. The load-hold period shall start as soon as each test load increment is applied. Pile movement during the 1.00 SVL and 1.000 UPC loads shall be measured and recorded at 1,2,3, 4, 5, 6, 10, 20, 30, 50, and sixty (60) minutes. The alignment load shall not exceed five percent (5%) of the SVL. Dial gauges shall be reset to zero after the initial AL is applied.

The acceptance criteria for micropile verification load test are:

(a) The Engineer shall determine the criteria for tolerable movement during the load test at the top of the micropile.

(b) At the end of the maximum test load increment for each cycle, test piles shall have a creep rate not exceeding 0.05 in (1.3 mm) /log cycle time (1 to 10 minutes) or 0.1 in (2.5 mm) /log cycle time (6 to 60 minutes or the last log cycle if held longer). The creep rate shall be linear or decreasing throughout the hold period.

(c) Failure does not occur at any load increment up to and including the maximum test load for each cycle. Failure is defined as load at which attempts to further increase the test load simply result in continued pile movement.

Upon completion of the test, the Contractor shall prepare and submit a report of the test results, stamped by a professional engineer, for review and acceptance by the Engineer prior to beginning installation of production micropiles. This report shall include written confirmation of the verification micropile' s capacity.

If a verification tested micropile fails to meet the acceptance criteria, the Contractor shall modify the design, the construction procedure, or both. These modifications may include modifying the installation methods, increasing the bond length, or changing the micropile type. Any modification that necessitates changes of the structure shall be submitted as a revision to the working drawings and require the Engineer's review and acceptance. Any modifications of design or construction procedures or cost of additional verification test piles and load testing shall be at the Contractor's expense. At the completion of verification testing, the Contractor shall remove test piles down to the elevation specified by the Engineer.

The Contractor shall perform proof load tests at the micropile locations as shown on the plans, and shall perform proof-load tests on the first set of production piles installed at each designated substructure unit prior to the installation of the remaining production piles in that unit. The initial proof-test piles shall be installed at the locations shown on the plans. Upon completion of each test, the Contractor shall prepare and submit a report of the test results, stamped by a professional engineer, for review and acceptance by the Engineer

The Contractor shall test proof test piles to a maximum test load of 1.00 times the Maximum Strength Limit Pile Load (STL). The STL load is provided on the Contract drawings. Proof tests shall be made by incrementally loading the micropile as shown in Table 7.06-2, to be used for both compression and tension loading:

Table 7.06-2, Incremental Loading for Proof Test Piles

Step	Loading	Applied Load	Hold Time (minutes)
1	Apply AL		2.5
2	Cycle 1	0.15 STL	2.5
		0.30 STL	2.5
		0.45 STL	2.5
		0.60 STL	2.5
		0.75 STL	2.5
		0.90 STL	2.5
		1.00 STL	10 to 60 minutes
		0.60 STL	2.5
		0.30 STL	2.5
		AL	

Depending on performance, either a ten-(10-)minute or sixty-(60-)minute creep test shall be performed at the 1.00 STL test load. Where the pile top movement between one (1) and then (10) minutes exceeds 0.039 in (1 mm), the Maximum Test Load shall be

maintained an additional fifty (50) minutes. Movements shall be recorded at 1, 2, 3, 5, 6, 10, 20, 30, 50 and 60 minutes. The alignment load shall not exceed five percent (5%) of STL. Dial gauges shall be reset to zero after the initial AL is applied.

The acceptance criteria for micropile proof load tests are:

(a) The Engineer shall determine the criteria for tolerable movement during the load test at the top of the micropile.

(b) At the end of the 1.00 STL test load increment, test piles shall have a creep rate not exceeding 0.05 in (1.3 mm) /log cycle time (1 to 10 minutes) or 0.1 in (2.5 mm) /log cycle time (6 to 60 minutes). The creep rate shall be linear or decreasing throughout the creep-load hold period.

(c) Failure does not occur at the 1.00 STL maximum test load. Failure is defined as the load at which attempts to further increase the test load simply result in continued pile movement.

If a proof-tested micropile fails to meet the acceptance criteria, the Contractor shall immediately proof test another micropile within that footing. For failed piles and further construction of other piles, the Contractor shall modify the design, the construction procedure, or both. These modifications may include installing replacement micropiles, incorporating piles at not more than fifty percent (50%) of the maximum load attained, post-grouting the tested pile and re-proof testing the pile, modifying installation methods, increasing the bond length, or changing the micropile type. Any modification that necessitates changes of the structure design shall require the Engineer's prior review and acceptance. Any modifications of design or construction procedures, or cost of additional verification test piles and verification or proof load testing, or replacement production micropiles, shall be at the Contractor's expense.

7.06.04 - Method of Measurement:

1. **Micropiles** will be measured for payment by the number of micropiles installed and accepted. There will be no separate measurement or payment for furnishing the design of the micropiles or developing installation methods to meet these Specifications.

2. **Verification Test for Micropiles** will be measured for payment by the number of verification tests performed on sacrificial micropiles.

3. **Proof Test for Micropiles** will be measured for payment by the number of proof tests performed on production micropiles.

4. **Micropile Length Adjustment** will be measured for payment by the length in linear feet (meter) of the difference between the estimated length of permanent casing, as shown on the plans, and the actual length of permanent casing installed and accepted by the Engineer. (Note that the permanent casing length is measured from the bottom of the pile cap to the permanent casing tip, including the required embedment of casing into rock. Embedment into the pile cap will not be measured for payment because it is considered incidental to micropile construction. Any increase in casing length will be measured for

payment to the Contractor, and any decrease in casing length will be measured for credit to the State.)

There will be no separate measurement or payment for mobilization and demobilization associated with this item.

7.06.05 - Basis of Payment:

1. **Micropiles** will be paid for at the Contract unit price each for “Micropiles” complete and accepted in place, including all design, development of installation methods, materials, equipment, tools, proper disposal of drilling spoil and labor incidental thereto.

2. **Verification Test for Micropiles** will be paid for at the Contract unit price each for “Verification Test for Micropiles” completed on sacrificial micropiles, including all materials, testing equipment, tools, test reports, removal of test piles and labor incidental thereto.

3. **Proof Test for Micropiles** will be paid for at the Contract unit price each for “Proof Test for Micropiles” completed on production micropiles, including all materials, testing equipment, tools, test reports and labor incidental thereto.

4. **Micropile Length Adjustment** will be paid for at the Contract unit price per linear foot (meter) for “Micropile Length Adjustment” complete and accepted, including all materials, equipment, tools, and labor incidental thereto.

Pay Item	Pay Unit
Micropiles	ea. (ea.)
Verification Test for Micropiles	ea. (ea.)
Proof Test for Micropiles	ea. (ea.)
Micropile Length Adjustment	l.f. (m)

CONNECTICUT
SUPPLEMENTAL SPECIFICATION
SECTION 8.22
TEMPORARY PRECAST CONCRETE BARRIER CURB

8.22.02 – Materials:

In the second sentence of the third paragraph, change "reflective" *to* "retroreflective."

8.22.04 – Method of Measurement:

Add the following sentence to the end of the second paragraph:

"Relocation of Temporary Precast Concrete Barrier Curb for access to the work area or for the convenience of the Contractor shall be considered incidental to Maintenance and Protection of Traffic and will not be measured for payment."

CONNECTICUT
SUPPLEMENTAL SPECIFICATION
SECTION 9.10
METAL BEAM RAIL

9.10.02 – Materials:

Change Subarticles 1 and 2 as follows:

“ 1. Chemical anchoring material shall meet the requirements of Article M.03.07.
2. Metal beam rail delineators shall meet the requirements of Article M.18.09 and Article M.18.13.”

9.10.04 – Method of Measurement:

1 – Metal Beam Rail (Type)

Delete the only sentence and replace with the following:

“The length of metal beam rail measured for payment will be the number of linear feet (meters) of accepted rail of the type or designation installed, including radius rail other than Curved Guide Rail Treatment, measured along the top of rail between centers of end posts in each continuous section.”

CONNECTICUT
SUPPLEMENTAL SPECIFICATION
SECTION 9.18
THREE CABLE GUIDE RAILING
(I-BEAM POSTS) AND ANCHORAGES

9.18.02—Materials:

In the second sentence of the only paragraph, change “reflective” *to* “retroreflective.”

9.18.03 – Construction Methods:

In the 10th paragraph, replace “MIL” *with* “MILSPEC.”

CONNECTICUT
SUPPLEMENTAL SPECIFICATION
SECTION 9.21
CONCRETE SIDEWALKS

Delete the entire Section and replace with the following:

SECTION 9.21
CONCRETE SIDEWALKS AND RAMPS

9.21.01—Description
9.21.02—Materials
9.21.03—Construction Methods
9.21.04—Method of Measurement
9.21.05—Basis of Payment

9.21.01—Description: This item shall consist of concrete sidewalks and ramps constructed on a gravel or reclaimed miscellaneous aggregate base course in the locations and to the dimensions and details shown on the plans or as ordered and in accordance with these specifications.

9.21.02—Materials: Materials for this work shall conform to the requirements of Article M.03.01 for Class “F” Concrete.

Gravel or reclaimed miscellaneous aggregate for base shall conform to Article M.02.01 for granular fill.

Detectable warning strips shall be prefabricated detectable warning tile chosen from the Department’s Qualified Products List for retrofit or cast in place applications.

9.21.03—Construction Methods:

1. Excavation: Excavation, including removal of any existing sidewalk (bituminous or concrete) and curbing, shall be made to the required depths below the finished grade, as shown on the plans or as directed. All soft and yielding material shall be removed and replaced with suitable material.

When connecting new concrete sidewalk to a section of existing concrete sidewalk, the connection point shall be at the nearest joint in the existing sidewalk.

The Contractor shall establish the limits required to achieve grades for each ramp prior to removal of existing sidewalk and ramps. The Contractor shall document and notify the Engineer of any control points that may conflict with the design grades or configuration of ramps shown on the plans. Control points can be but are not limited to ROW, utility poles, drainage structures, buildings, fences, walls or other features found near the proposed ramp. When control points are encountered within the limits of the ramp, the Engineer will determine if an alternative ramp type is required or the ramp is to be constructed as shown on the plans.

2. Gravel or Reclaimed Miscellaneous Aggregate Base: The gravel or reclaimed miscellaneous aggregate base shall be placed in layers not to exceed 6 inches in depth and to such a depth that after compaction it shall be at the specified depth below the

finished grade of the walk. The base shall be wetted and rolled or tamped after the spreading of each layer.

3. Forms: Forms shall be of metal or wood, straight, free from warp and of sufficient strength to resist springing from the pressure of the concrete. If made of wood, they shall be of 2-inch surfaced plank except that at sharp curves thinner material may be used. If made of metal, they shall be of an approved section and have a flat surface on the top. Forms shall be of a depth equal to the depth of the sidewalk. Forms shall be securely staked, braced and held firmly to the required line and grade and shall be sufficiently tight to prevent leakage of mortar. All forms shall be cleaned and oiled or wetted before concrete is placed against them. Sheet metal templates 1/8 inch in thickness, of the full depth and width of the walk, shall be spaced at intervals of 12 feet or as directed. If the concrete is placed in alternate sections, these templates shall remain in place until concrete has been placed on both sides of the template. As soon as the concrete has obtained its initial set, the templates shall be removed.

4. Concrete: The concrete shall be proportioned, mixed, placed, etc., in accordance with the provisions of Section 6.01 for Class “F” Concrete. Concrete shall be cured in accordance with the provisions of Article 4.01.03 for Concrete Pavement.

5. Finishing: The surface of the concrete shall be finished with a wood float or by other approved means. The outside edges of the slab and all joints shall be edged with a 1/4-inch radius edging tool. Each slab shall be divided into two or more sections by forming dummy joints with a jointing tool as directed.

6. Backfilling and Removal of Surplus Material: The sides of the sidewalk shall be backfilled with suitable material thoroughly compacted and finished flush with the top of the sidewalk. All surplus material shall be removed and the site left in a neat and presentable condition to the satisfaction of the Engineer.

7. Detectable Warning Strip: The detectable warning strip for new construction shall be set directly in poured concrete and each tile shall be weighed down to prevent the tile from floating after placement in wet concrete in accordance with curing procedures. Install detectable warning strip, according to the plans and the manufacturer’s specifications, or as directed by the Engineer.

The detectable warning strip for retrofit construction shall be installed according to the plans in the direction of pedestrian route and contained wholly within painted crosswalk when present. Its installation shall conform to all manufacturer’s requirements.

9.21.04—Method of Measurement: This work will be measured for payment as follows:

1. Concrete Sidewalk or Sidewalk Ramp: This work will be measured by the actual number of square feet of completed and accepted concrete sidewalk or ramp.

2. Excavation: Excavation below the finished grade of the sidewalk or ramp, backfilling, and disposal of surplus material will not be measured for payment, but the cost shall be included in the price bid for the sidewalk or ramp. Excavation above the finished grade of the sidewalk or ramp will be measured and paid for in accordance with Section 2.02.

3. Gravel or Reclaimed Miscellaneous Aggregate Base: This work will not be measured for payment, but the cost shall be considered as included in the price bid for the sidewalk or ramp.

4. Detectable Warning Strip: For new construction (cast in place), the detectable warning strip will be measured for payment by the actual number of each ramp where a

detectable warning strip has been installed and accepted regardless of the number of tiles installed.

5. **Retrofit Detectable Warning Strip:** For retrofit construction (surface applied), the detectable warning strip will be measured for payment by the actual number of each ramp where a detectable warning strip has been installed and accepted regardless of the number of tiles installed.

6. **Construction Staking:** The establishment of control points and limits of grading will be measured in accordance with the item "Construction Staking."

9.21.05—Basis of Payment: Construction of a concrete sidewalk or ramp will be paid for at the Contract unit price per square foot for "Concrete Sidewalk," or “Concrete Sidewalk Ramp” complete in place, which price shall include all excavation as specified above, backfill, disposal of surplus material, curb removal and any monolithic or separately cast sidewalk curb when required for the sidewalk ramp as shown on the plans, gravel or reclaimed miscellaneous aggregate base, equipment, tools, materials and labor incidental thereto.

A new detectable warning strip will be paid for at the Contract unit price for each ramp where the detectable warning strip has been installed complete in place. This price shall include all tiles, materials, equipment, tools and labor incidental thereto.

Retrofitting the existing concrete sidewalk with a detectable warning strip will be paid for at the Contract unit price for each ramp where the retrofit detectable warning strip has been installed complete in place. This price will include all tiles, saw cutting concrete, adhesive, drilling holes for fasteners, materials, equipment, tools and labor incidental there to.

The establishment of control points and limits of grading will be paid for in accordance with the item "Construction Staking."

Pay Item	Pay Unit
Concrete Sidewalk	s.f.
Concrete Sidewalk Ramp	s.f.
Detectable Warning Strip	ea.
Retrofit Detectable Warning Strip	ea.

CONNECTICUT
SUPPLEMENTAL SPECIFICATION
SECTION 9.22
BITUMINOUS CONCRETE SIDEWALK
BITUMINOUS CONCRETE DRIVEWAY

9.22.03 – Construction Methods:

Replace the first paragraph with the following:

"**1. Excavation:** Excavation, including saw cutting, removal of any existing sidewalk, or driveway, shall be made to the required depth below the finished grade, as shown on the plans or as directed by the Engineer. All soft and yielding material shall be removed and replaced with suitable material."

9.22.05 – Basis of Payment:

Replace the only paragraph with the following:

"This work will be paid for at the contract unit price per square yard (square meter) for "Bituminous Concrete Sidewalk" or "Bituminous Concrete Driveway," as the case may be, complete in place, which price shall include all saw cutting, excavation as specified above, backfill, disposal of surplus material, gravel or reclaimed miscellaneous aggregate base, and all equipment, tools, labor and materials incidental thereto."

CONNECTICUT
SUPPLEMENTAL SPECIFICATION
SECTION 9.44
TOPSOIL

9.44.03—Construction Methods:

Add the following paragraph to the beginning of the article:

"The Contractor shall notify the Engineer of the location of the topsoil at least 15 calendar days prior to delivery. The topsoil and its source shall be inspected and approved by the Engineer before the material is delivered to the project. Any material delivered to the project, which does not meet specifications or which has become mixed with undue amounts of subsoil during any operation at the source or during placing and spreading, will be rejected and shall be replaced by the Contractor with acceptable material."

CONNECTICUT
SUPPLEMENTAL SPECIFICATION
SECTION 9.49
FURNISHING, PLANTING and MULCHING
TREES, SHRUBS, VINES and GROUND COVER PLANTS

9.49.03 – Construction Methods:

Replace subarticle "5. Pits" *with the following:*

"**5. Pits:** The pit diameters shall be twice the diameter of the root-spread or container diameters, and shall be 2- inches (50 millimeters) less than the height of the rootball measured from the bottom of the ball to the root collar. (i. e. A 12-inch (300 millimeters) measurement between the root collar and the bottom of the rootball will require a 10-inch (250 millimeters) deep pit). Any excavation in excess of that required shall be replaced with planting soil and compacted to the satisfaction of the Engineer."

Add the following sentence to subsection "6. Obstructions Below Ground:"

"If removal of obstructions results in a deeper hole than needed for planting, backfill material shall be added and compacted to the satisfaction of the Engineer."

Replace subarticle "7. Preparation of Backfill" *with the following:*

"**7. Backfill:** Backfill shall conform to M.13.01-1 Planting Soil."

Replace subarticle "8. Setting Plants" *with the following:*

"**8. Setting Plants:** All plants shall be plumb and at a level that is 2-inches (50 millimeters) higher than the surrounding ground. Backfill material for all plants shall be thoroughly and properly settled by firming or tamping. Thorough watering shall accompany backfilling. Saucers capable of holding water shall be formed at individual plants (exclusive of plant beds) by placing ridges of planting soil around each, or as directed by the Engineer.

a. Balled and Burlapped plants: Plants shall be handled in such manner so that the soil will not be loosened from the roots inside of the ball. Carefully place the plant into the prepared pits and backfill with planting soil to one - half the depth of the pit, thoroughly tamp to the satisfaction of the Engineer around the ball. Fill the remaining area of the pit with water. Once water has completely drained, loosen the burlap and peel down the top one third. If wire baskets are used, cut and bend down the top third of the basket. Roots that have been wrapped around the ball within the burlap shall be straightened and the remainder of the pit filled with planting soil tamped to ensure that no air pockets remain.

b. Container Grown Plants: Carefully remove the plant from the container over the prepared pits. Gently loosen the soil and straighten all roots as naturally as possible. Place into the bottom of the pit. Backfill with planting soil to one - half the depth of the pit. Thoroughly tamp to the satisfaction of the Engineer. Fill remaining area of the pit with water. Once water has completely drained fill the remainder of the pit with planting soil tamped to ensure that no air pockets remain.

c. Bare-roots Plants: Carefully spread roots as naturally as possible and place into the bottom of the pit. All broken or frayed roots shall be cleanly cut off. Backfill with planting soil to one - half the depth of the pit. Thoroughly tamp to the satisfaction of the Engineer. Fill remaining area of the pit with water. Once water has completely drained fill the remainder of the pit with planting soil tamped to ensure that no air pockets remain."

Replace subarticle "10. Watering" *with the following:*

"**10. Watering:** All plants shall be watered upon setting and as many times thereafter as conditions warrant.

The following is a guide for minimum requirements:

Trees:
- 2 ½" Caliper and less – Fifteen (15) gallons each.
- 3" to 5" Caliper – Twenty (20) gallon each.
- 5 ½" Caliper and above – Twenty-five (25) gallon each.

Shrubs:
- 24" and less – Six (6) gallon each.
- More than 24"- Ten (10) gallon each.

Vines, Perennials, and Ornamental Grasses – Three (3) gallons each.
Groundcovers and Bulbs – Two (2) gallons per square foot.

Water shall be applied at a controlled rate and in such a manner to ensure that the water reaches the root zone (saucer) of the plant or plant bed and does not run off to adjacent areas. Watering shall be applied in a manner that does not dislodge plants, erode soil or mulch, or cause damage to saucer.

The Contractor may use slow-release, drip irrigation bags for watering in accordance with manufacturer's instructions. The use of these portable/temporary irrigation bags will require the approval of the Engineer.

Overhead hydro-seeder spray nozzles shall not be used as watering devices."

Replace subarticle "17. Establishment Period" *with the following:*

"**17. One-Year Establishment Period:** All plant material shall be subject to a One-Year Establishment Period. During this time, the Contractor shall use currently accepted horticultural practices to keep all plant material installed in a healthy, vigorous growing condition at the date of final acceptance. The date of final acceptance shall be one full

calendar year following the satisfactory completion of the planting activities as confirmed by the Engineer.

An inspection will be held one year from the date of installation with the Contractor, Engineer, and Landscape Designer to determine the acceptability of the plant establishment. An inventory of losses and rejected materials will be made and corrective and necessary clean up measures will be determined at the plant inspection."

CONNECTICUT
SUPPLEMENTAL SPECIFICATION
SECTION 9.75
MOBILIZATION

Delete the entire section and replace with the following new section:

SECTION 9.75
MOBILIZATION AND PROJECT CLOSEOUT

9.75.01 – Description: This item consists of

1. all work necessary for moving Project personnel and equipment to the Project Site;
2. all work necessary for the establishment of the Contractors' field offices, buildings and other facilities necessary for Contract performance;
3. the preparation of work plans and other documents that must be submitted by the Contractor to the Department prior to the start of physical Project construction. These initial submittals are identified elsewhere in the Contract and may include Project schedules, Project management plans, staging and storage areas, safety plans, quality control plans, erosion and sedimentation control plans, and other documents addressing general Project sequencing or management;
4. demobilization of plant and equipment;
5. completion of all physical work, and
6. completion of administrative closeout items as required by the Contract.

The work entailed in this item shall not be subcontracted in whole or part.

9.75.04 – Method of Measurement: This work will be measured for payment in the manner described hereinafter; however, the total Contract amount earned will not include payments for mobilization that were earned during the period covered by the current monthly estimate, but will include those payments for mobilization that were previously earned and certified for payment.

1. When the first Project payment estimate is reviewed by the Engineer, twenty-five percent (25%) of the lump sum bid price for this item or two and a half percent (2.5%) of the total original Contract price, whichever is less, will be certified for payment as a part of that estimate.

2. When the Contractor's initial Project submittals are accepted by the Engineer, fifty percent (50%) of the lump sum bid price for this item or five percent (5%) of the total original Contract price, whichever is less, minus any previous Project payments made to the Contractor for this item, will be certified for payment.

3. When the Contractor's initial Project submittals are accepted by the Engineer, and fifteen percent (15%) of the total original Contract price has been earned by the Contractor, seventy percent (70%) of the lump sum price of this item or seven percent (7%) of the total original Contract price, whichever is less, minus any previous Project payments made to the Contractor for this item, will be certified for payment.

4. When thirty percent (30%) of the total original Contract price has been earned by the Contractor, eighty-five percent (85%) of the lump sum price of this item or eight and a half percent (8.5%) of the total original Contract price, whichever is less, minus any previous payments made to the Contractor for this item, will be certified for payment.

5. When the requirements of Article 1.08.13 have been satisfied by the Contractor, ninety-five percent (95%) of the lump sum price of this item, minus any previous payments made to the Contractor for this item, will be certified for payment.

6. When the requirements of Article 1.08.14 have been satisfied by the Contractor, one hundred percent (100%) of the lump sum price of this item, minus any previous payments made to the Contractor for this item, will be certified for payment. When this payment is made, the Contractor should have received full Contract payment for this item.

Nothing herein shall be construed to limit or preclude the Department from making partial payments to the Contractor that are provided for elsewhere in this Contract.

9.75.05 – Basis of Payment: The work under this item will be paid for at the Contract lump sum price for "Mobilization and Project Closeout," which price shall include materials, equipment, tools, transportation, labor and all work incidental thereto.

Payment for this item shall be made only once; *i.e.*, for only one instance of mobilization as described in Article 9.75.01 above. If the Contractor mobilizes equipment or facilities more than one time during the course of the Project, due to reasons solely the responsibility of the Department, the additional work entailed therein will be paid for as Extra Work under Section 1.04.05 hereof.

Pay Item	Pay Unit
Mobilization and Project Closeout	l.s. (l.s.)

CONNECTICUT
SUPPLEMENTAL SPECIFICATION
SECTION 9.77
TRAFFIC CONE

9.77.02—Materials:

Change the end of the last sentence as follows:

“ Traffic cones used at night shall be reflectorized by utilizing Type VI or Type IX Retroreflective Sheeting, in accordance with Article M.18.09.”

Add the following paragraph after the only paragraph:

“ Prior to using traffic cones on the project, the Contractor shall submit to the Engineer a copy of the manufacturer’s self-certification that the traffic cones comply with the requirements of the NCHRP Report 350 or the AASHTO MASH for Category 1 Devices.”

CONNECTICUT
SUPPLEMENTAL SPECIFICATION
SECTION 9.78
TRAFFIC DRUM

9.78.02—Materials:

Delete the second and third paragraph and replace with the following:

“ Type IX Retroreflective Sheeting, in accordance with Article M.18.09, shall be used on traffic drums. Only one type sheeting shall be used on a drum and all drums furnished on a construction project shall be manufactured with the same type retroreflective sheeting.

Prior to using traffic drums on the project, the Contractor shall submit to the Engineer a copy of the manufacturer’s self-certification that the traffic drums comply with the requirements of the NCHRP Report 350 or the AASHTO MASH for Category 1 Devices.”

CONNECTICUT
SUPPLEMENTAL SPECIFICATION
SECTION 9.79
CONSTRUCTION BARRICADES

9.79.01—Description:

Delete the entire article and replace with the following:

"**9.79.01—Description:** Under this item the Contractor shall furnish all construction barricades of the specified type required on the Project to comply with the requirements of NCHRP Report 350 (TL-3), or the AASHTO MASH, and the requirements stated in the item "Maintenance and Protection of Traffic," as shown on the plans and as directed by the Engineer."

9.79.02—Materials:

Delete the last two paragraphs and replace with the following:

" Alternate stripes of white and orange Type IV or Type IX retroreflective sheeting shall be applied to the horizontal members as shown on the plans. Only one type sheeting shall be used on a barricade and all barricades furnished on a construction project shall have the same type of retroreflective sheeting. Retroreflective sheeting shall conform to the requirements of Article M.18.09.

Construction barricades shall be designed and fabricated so as to prevent them from being blown over or displaced by the wind from passing vehicles. Construction barricades shall be approved by the Engineer before they are used.

Materials Certificates shall be required confirming compliance with the requirements set forth in the plans and specifications for these barricades.

Prior to using barricades on the Project, the Contractor shall submit to the Engineer a copy of the Letter of Acceptance issued by the FHWA to the manufacturer documenting that the barricades comply with the requirements of NCHRP Report 350 (TL-3) or the AASHTO MASH for Category 2 Devices."

9.79.03—Construction Methods:

Delete the second paragraph in its entirety.

Delete the third and fourth paragraphs and replace with the following:

" Ineffective barricades, as determined by the Engineer and in accordance with ATSSA guidelines contained in "Quality Standards for Work Zone Traffic Control Devices," shall be replaced by the Contractor at no cost to the State.

Barricades that are no longer required shall be removed from the Project and shall remain the property of the Contractor."

CONNECTICUT
SUPPLEMENTAL SPECIFICATION
SECTION 9.80
CONSTRUCTION STAKING

Delete the entire Section and replace with the following:

SECTION 9.80
CONSTRUCTION STAKING

9.80.01—Description: The work under this item shall consist of construction layout and reference staking necessary for the proper control and satisfactory completion of work on the Project, however establishment of Property lines, highway lines, or non-access lines shall not be deemed work under this item.

This item shall also include all construction layout and reference staking required for identifying construction features within 25 ft (7.625 m) of regulated areas, and for the proper placement of all relocated underground and aerial utilities.

9.80.02—Materials: Stakes used for control staking shall be a minimum of 1 in x 1 in (25 mm x 25 mm) in width and a minimum of 18 in (0.5 m) in length. Stakes shall be legibly marked and shall be visible from the edge of the travelway, and shall be durable enough to last for the duration of the Contract. In areas where traditional staking cannot be established, other materials or methods may be used to mark critical locations, as approved or directed by the Engineer. For slope limits, pavement edges, gutter lines, etc., where so-called "green" or "working" stakes are commonly used, lesser quality stakes will be acceptable, provided that the stakes are suitable for the intended purpose

9.80.03—Construction Methods: The Department will furnish the Contractor such control points, bench marks, and other data as may be necessary for the construction staking and layout by qualified engineering or surveying personnel as noted elsewhere herein.

The Contractor shall be responsible for the placement and preservation of adequate ties to reference points necessary for the accurate re-establishment of base lines, center lines and at all critical locations, including all line-striping and grooving for line-striping, and grades as shown on the plans or directed by the Engineer.

Stakes, references, and batter boards required for construction operations, signing and traffic control shall be furnished, set and properly referenced by the Contractor. The Contractor shall be solely and completely responsible for the accuracy of the line and grade of all features of the work. The Contractor shall call to the Engineer’s attention immediately any errors or apparent discrepancies found in previous surveys, plans, specifications or special provisions for correction or interpretation prior to proceeding with the affected work.

During roadway construction (or Site work), the Contractor shall provide and maintain for the appropriate periods, as determined by the Engineer, reference stakes at maximum 100-ft (30-m) intervals outside the slope limits. Further, the Contractor shall provide and maintain reference stakes at 50-ft (15-m) intervals immediately prior to and during the formation of subgrade and the construction of subsequent pavement layers.

These stakes shall be properly marked as to station and offset, and shall be referenced to the proposed grade.

Wetland Areas: When identified in the Contract, the Contractor shall provide additional reference stakes to assist the Engineer and regulatory personnel in the duties at regulated areas, including inland wetlands, tidal wetlands and watercourses. The Contractor shall place additional reference stakes to identify all slope limits, culvert ends, endwalls, riprap areas and other construction features within 25 ft (7.625 m) of regulated areas. For the placement of these additional stakes the regulated areas, approximate slope limits and other construction features are those shown on the environmental permit plates included in the Contract, or the latest revisions available. The Contractor shall provide stakes at a maximum spacing of 50 ft (15 m). Each stake shall be marked in a manner acceptable to the Engineer, to identify the baseline station and offset, and the feature it represents. The Contractor shall maintain or replace these stakes until the Engineer approves their removal.

Utility Relocations: The Contractor shall provide additional reference stakes to assist the Engineer and public utility personnel to accurately identify the proposed locations for utility facilities to be relocated. At least two weeks prior to the scheduled relocation of public utilities, the Contractor shall stake out the following features throughout the limits of utility relocations:

1. The proposed edge of road on the side adjacent to the proposed utility relocations.
2. Both edges of proposed sidewalks, where shown on the plans.

The Contractor shall provide stakes at a maximum spacing of 25 ft (7.625 m), unless directed otherwise by the Engineer.

The Contractor shall provide and maintain reference stakes at structures such as drainage structures, and shall include additional reference stakes for the determination of the structure alignments as may be needed for the proper construction of the drainage or other structure. The reference stakes shall be placed immediately prior to, and maintained during, the installation of the drainage structure. These stakes shall be properly marked as to station and offset, and shall be referenced to the proposed grade.

The Contractor shall furnish to the Engineer copies of any data used in setting and referencing stakes and other layout markings used by the Contractor after completion of each related operation, if requested to do so by the Engineer.

The Contractor shall provide safe facilities for convenient access by Department forces to all survey stakes, control points, batter boards, and references when requested to do so by the Engineer.

All staking shall be performed by qualified engineering or surveying personnel trained, experienced and skilled in construction layout and staking of the type required under the Contract. Prior to the start of related work, the Contractor shall submit to the Engineer for review and comment the qualifications of personnel responsible for construction staking on the Project. The submission shall include a description of the experience and training that the proposed personnel possesses and a list of State projects that the personnel have worked on previously. On all bridge projects, surveying shall be performed under the direct supervision of a Professional Surveyor licensed in the State of Connecticut. All field layout and staking required for the Project shall be performed under the direct supervision of a person, or persons, with engineering background, experienced in the direction of such work and acceptable to the Engineer. If the personnel responsible for construction staking should change during the course of the

Project, a revised submittal will be required prior to the Contractor's being allowed access to the Site.

The Department may check the control of the work, as established by the Contractor, at any time. The Contractor will be informed of the results of these checks, but the Department, by so doing, in no way relieves the Contractor of responsibility for the accuracy of the layout work. The Contractor shall correct or replace, at the Contractor's own expense, any deficient layout and construction work that may result from inaccuracies in the Contractor's staking operations from its failure to report such inaccuracies found in work done by the Department or by others. If, as a result of such inaccuracies, the Department is required to make further studies, redesign, or both, the Department will deduct all expenses incurred by the Department in doing so from any monies it owes to the Contractor.

The Contractor shall furnish all necessary personnel, surveying instruments, engineering equipment and supplies, materials, transportation, and work incidental to the accurate and satisfactory completion of work under this item.

For roadways where the existing pavement markings need to be reestablished or grooved markings are to be used: Prior to any resurfacing or obliteration of existing pavement markings, the Contractor and a representative of the Engineer must establish and document pavement marking control points from the existing markings. These control points shall be used to reestablish the positions of the lanes, the beginnings and endings of tapers, channelization lines for on- and off-ramps, lane-use arrows, stop bars, driveways, private drives, road entrances, and any lane transitions in the Project area, including all line striping grooving. The Contractor shall use these control points to provide appropriate premarking prior to the installation of final markings, including grooves.

The Contractor shall provide and maintain reference stakes or markings at 100-ft (30-m) intervals immediately off the edge of pavement, so that the Contractor will later be able to reestablish the existing pavement markings and necessary line stripe grooving limits. The Contractor shall also provide and maintain additional reference stakes and/or markings at any point where there is a change in pavement markings, so that the Contractor will later be able to reestablish the existing pavement markings and grooving limits.

For non-limited access roadways: On non-limited access roadways the Contractor may need to adjust the final locations of the pavement marking or grooving limits in light of a need to accommodate pedestrian and bicycle traffic. Prior to any resurfacing or obliteration of existing pavement markings, the Contractor, the Engineer, and a representative from the Division of Traffic Engineering must establish and document pavement marking control points from the existing marking and grooving limits as described above. The control points at that time may be adjusted to provide wider shoulders while maintaining through travel lane widths of no less than 11 ft (3.3 m). Suggested lane/shoulder widths for commonly encountered half sections are shown in the table below.

Centerline to curb or edge of road	Lane width	Shoulder width
12 to 16 ft (3.6 to 4.9 m)	11 ft (3.3 m)	Remaining Pavement
17 to 20 ft (5.2 to 6.1 m)	12 ft (3.6 m)	Remaining Pavement

9.80.04—Method of Measurement: Construction staking will be measured for payment as a Contract lump sum item.

9.80.05—Basis of Payment: Construction staking will be paid for at the Contract lump sum price for "Construction Staking," which price shall include all maintenance, materials, tools, equipment, labor and work incidental thereto, including removal of materials. The Contractor shall submit to the Department a schedule of payment values for review and comment prior to payment.

Pay Item	Pay Unit
Construction Staking	l.s. (l.s.)

CONNECTICUT
SUPPLEMENTAL SPECIFICATION
SECTION 9.81
42 INCH (1 METER) TRAFFIC CONE

9.81.01—Description:

Delete the only sentence and replace with the following:

“ This item shall consist of furnishing 42-inch (1.07-meter) retroflective traffic cones required on the Project to meet the requirements of the traffic control plans, as stated in the item "Maintenance and Protection of Traffic," as shown on the plans or as directed by the Engineer.”

9.81.02—Materials:

Delete the last two paragraphs and replace with the following:

“ Retroflective stripes shall be fabricated from Type IX retroflective sheeting. All stripes shall be of one type of sheeting. Retroflective sheeting shall conform to Article M.18.09. Prior to using traffic cones on the Project, the Contractor shall submit to the Engineer a copy of the manufacturer’s self-certification that the traffic cones comply with the requirements of NCHRP Report 350 or the AASHTO MASH for Category 1 Devices.”

9.81.03-Construction Methods:

In the first sentence, change “manufacturers” to “manufacturer’s.”

CONNECTICUT
SUPPLEMENTAL SPECIFICATION
SECTION 10.00
GENERAL CLAUSES FOR HIGHWAY ILLUMINATION AND TRAFFIC SIGNAL PROJECTS

Add the following new article after **10.00.13 Service Installations:**

" 10.00.14- Maintenance of Illumination During Construction: The Contractor shall organize the Project work so that any portion of roadway which has existing roadway illumination and is open for use remains lighted. The Contractor shall also provide illumination on all temporary crossovers, ramps and roadways that are constructed as part of staged construction and that are open for use. Highway illumination may consist of: existing lighting, new lighting, temporary lighting, or any combination thereof. It is the Contractor's responsibility to stage the installation or relocation of service cabinets, poles, lights, and circuitry so that all roadways of the kind described above remain lighted. If it is necessary to install temporary poles, lights, or circuitry to maintain the integrity of the highway illumination system, such work shall be submitted to the Engineer for approval prior to installation, and will be paid for at the Contract bid unit price for the relevant items. Temporary illumination work not specifically covered by the Contract specifications and pay items will be paid for as extra work at the discretion of the Engineer.

If the Contract includes temporary illumination plans, those plans shall serve as a framework for providing roadway illumination during construction. Temporary illumination plans may not represent the full extent of the temporary illumination work required, or the exact quantity of temporary lights required to maintain proper roadway illumination.

Prior to the start of any work that will interfere with the existing lighting system, the Contractor and ConnDOT District Electrical Maintenance personnel shall inspect the system for lighting outages, pole knockdowns, and circuit malfunctions. Deficiencies will be noted and repaired by Department forces prior to the start of work by the Contractor.

Once the Contractor's work interferes with or impacts the existing roadway lighting system, maintenance of that system within the Project limits becomes the Contractor's responsibility. The repair of lighting system malfunctions occurring outside of the project limits, caused by the Contractor's work, shall also be the Contractor's responsibility. District Construction personnel will note the start and end date of the Contractor's responsibility for maintenance of any existing lighting system.

The Contractor shall maintain the illumination throughout the duration of the Project, until the Project is accepted by the State. The Contractor shall supply to the Project Engineer and to the ConnDOT District Electrical Maintenance Supervisor, the names and phone numbers of a primary and back-up representative, to be contacted should a problem with the lighting system occur.

Whoever discovers a lighting outage or pole damage/knockdown within the Project limits shall immediately notify ConnDOT Highway Operations of same as follows:

1. For projects in Districts 1, 2, and 4, call (860) 594-3447.
2. For projects in District 3 and along the Interstate 95 corridor within District 2, call (203) 696-2690.

The following procedures will be followed for lighting outages:

1) Once notified of a lighting outage, ConnDOT Electrical Maintenance personnel will assess the situation, and in the case of a pole knockdown, may clear the pole from the roadway and make safe any exposed wires.

2) The Project Inspector and the Contractor's designated representative shall be notified after the lighting outage has been assessed by ConnDOT Electrical Maintenance, transferring responsibility for further repairs to the Contractor.

3) Upon notification, the Contractor shall be responsible to repair the lighting system before the normal nighttime turn-on of the lights. If this cannot be achieved, the Contractor shall make the lighting operational prior to the next normal nighttime turn-on of the lights, up to a maximum of 24 hours from the time the Contractor was notified of the problem. The Contractor shall contact the Project Inspector to discuss the situation, the steps to be taken to bring the lighting back on line, and the time frame for doing so.

4) For isolated individual luminaire outages (not a continuous circuit), the Contractor shall repair such luminaires within 48 hours from the time that the Contractor became aware of the outage.

The Contractor shall follow standard "lock-out," "tag-out," and "Call Before You Dig" procedures when working on the lighting circuit. Both the Contractor and ConnDOT Electrical Maintenance shall have mutual access to active lighting control cabinets.

The Contractor will be reimbursed for any costs associated with the maintenance of the existing lighting system that are beyond the Contractor's control. Reimbursements will be for damage caused by the general public and normal system age related component failures (such as lamp burn-out, ballast/starter failure or cable splice failure). However, the Contractor shall be responsible for repair of damage to the existing lighting system incurred as the result of their operations including damage caused by improper wiring methods. All repairs or replacements due to the Contractor's operations shall be made by the Contractor at their expense.

The Project Inspector will maintain a log book of any lighting repair work performed, which will include a description of the repairs, and the date the work was performed. The log book will be made accessible to ConnDOT Electrical Maintenance personnel.

Temporary illumination circuitry shall consist of pre-assembled aerial cable of the type and size as indicated in the Contract documents or as directed by the Engineer.

The Contractor shall notify the Engineer when aerial cable cannot be installed due to construction activities and shall suggest another method for installation of the cable.

Alternate options may include installing cable in duct underground, or installing surface-mounted cable in duct or PVC conduit with cable along the backside of a bridge parapet or temporary concrete barrier curbing. Temporary cable in duct/conduit or aerial cable lying directly on the ground will not be allowed. The option of surface-mounting duct or conduit to the backside of a parapet or barrier will be allowed only when construction activities make it necessary, and where the surface-mounted conduit will not expose workers to a high voltage hazard. The Contractor must obtain the Engineer's approval to do so prior to installing temporary circuitry not installed overhead, unless otherwise indicated on the plans.

When temporary circuitry is installed in trench, standard warning tape procedures shall be followed as set forth in Article 1.05.15. When temporary circuitry is surface mounted to the backside of a parapet or barrier wall, the Contractor shall install warning placards which read: "Live Electricity." Warning placards shall be installed at the beginning, end, and at intermittent points 100 feet (30 meters) apart along the exposed length of the duct/conduit. All temporary lighting circuits shall include a continuous No. 8 bare copper grounding conductor connected to all light standards and effectively grounded as per the NEC."

CONNECTICUT
SUPPLEMENTAL SPECIFICATION
SECTION 10.01
TRENCHING AND BACKFILLING

10.01.01- Description:

In the only sentence of the first paragraph after "…satisfactory…" *add the following:* "clean-up and".

In the only sentence of the second paragraph after "…reconstruction of…" *add the following:* "bituminous, concrete and granite curbing,".

10.01.05- Basis of Payment:

In the only sentence of the second paragraph after "…mulching…" *add the following:* "clean-up and". *After* "…installing…" *add the word* "curbing,".

At the end of the third paragraph, add the following: "In the absence of a "Rock in Trench Excavation" item, the work will be compensated as extra work."

In the only sentence of the sixth paragraph, after "…unit price for 'Concrete Sidewalk'…" *add the following:* "or as extra work, if no unit price has been established."

CONNECTICUT
SUPPLEMENTAL SPECIFICATION
SECTION 10.10
CONCRETE HANDHOLE

10.10.02 – Materials:

Replace “M.03.01” *with* “M.03” *for both Class A and Class C Concrete.*

10.10.05 – Basis of Payment

In the first sentence, remove the words “ground wire”.

At the end of the paragraph add the following sentence:

“The ground wire (bonding wire) is included in the Contract unit price under Section 10.08 – Electrical Conduit.”

Add the word “Cover” *to the end of the pay item* “Cast Iron Handhole”

CONNECTICUT
SUPPLEMENTAL SPECIFICATION
SECTION 11.13
CONTROL CABLE

11.13.03 – Construction Methods:

In the 1st paragraph of subsection 2 replace "MIL" with "MILSPEC."

CONNECTICUT
SUPPLEMENTAL SPECIFICATION
SECTION 12.07
SIGN FACE – EXTRUDED ALUMINUM

*Change the Section title from "***Sign Face – Extruded Aluminum (Type III Reflective Sheeting)***" to "***Sign Face – Extruded Aluminum***."*

12.07.01—Description:

In the first sentence, change "reflective" *to* "retroreflective."

12.07.03—Construction Methods:

In the first sentence of the second paragraph, change "Reflective" *to* "Retroreflective."

In the second sentence of the second paragraph, change "reflective" *to* "retroreflective."

After the last paragraph, add the following:

" All overhead sign foundations shall be field staked. The locations of the stakes shall be accepted by an Engineer from the Division of Traffic Engineering, a minimum of seven (7) days prior to installation.

For all side mounted signs, the edge of the sign closest to the roadway and the sign foundation shall be field staked and accepted by an Engineer from the Division of Traffic Engineering, a minimum of seven (7) days prior to installation.

For side-mounted signs, the offset to the near edge of the sign face shall exceed the maximum deflection of the guide rail, unless otherwise shown on the plans or directed by the Engineer."

12.07.05—Basis of Payment:

In the Pay Item – Pay Unit table, delete "(Type IV Reflective Sheeting)."

CONNECTICUT
SUPPLEMENTAL SPECIFICATION
SECTION 12.08
SIGN FACE – SHEET ALUMINUM

12.08.01—Description:

Delete the only paragraph and replace with the following:

“ This item shall consist of furnishing and installing sign face-sheet aluminum signs of the type specified, metal sign posts, span-mounted sign brackets and mast arm-mounted sign brackets at locations indicated on the plans or as ordered and complying with the requirements of the plans and these Specifications.”

12.08.02—Materials:

Delete the entire article and replace with the following:

“ Retroreflective sheeting shall meet the requirements of Article M.18.09, Type IV or IX.
Sheet aluminum sign blanks shall meet the requirements of Article M.18.13.
Silk screening of Type IV or IX retroreflective sheeting shall meet the requirements specified by the retroreflective sheeting manufacturer.
Metal sign posts shall meet the requirements of Article M.18.14.
Sign mounting bolts shall meet the requirements of Article M.18.15.”

12.08.03—Construction Methods:

In the first sentence of the first paragraph, change “... shall conform to ...*” to “*...shall be as shown in ...*”*

In the second, third and fourth sentences of the first paragraph, change “reflective” *to* “retroreflective.”

*In the third and fourth sentences of the first paragraph, change “*Type III reflective*” to “*Type IV or IX retroreflective*.”*

*In the first sentence of the second paragraph, change “*Reflective*” to “*Retroreflective*.”*

*In the second sentence of the second paragraph, change “*reflective*” to “*retroreflective*.”*

*In the first sentence of the third paragraph, change “*Type I, Type II or Type III reflective*” to “*Type IV or IX retroreflective*.”*

*In the first and second sentences of the third paragraph, change “*reflective*” to “*retroreflective*.”*

In the last sentence of the third paragraph, change "Type I or Type II reflective" *to* "Type IV or IX retroreflective."

Delete the last sentence of the last paragraph.

12.08.05—Basis of Payment:

In the only paragraph, delete "… or parapet mounted sign support …"

CONNECTICUT
SUPPLEMENTAL SPECIFICATION
SECTION 12.10
EPOXY RESIN PAVEMENT MARKINGS, SYMBOLS AND LEGENDS

12.10.03—Construction Methods:

2. Procedures:

Insert the following after the sixth paragraph:

"The epoxy shall be uniformly applied to the surface to be marked to ensure a wet film thickness of the applied epoxy, without glass beads, of 20 mils +/- 1 mil (500 um +/- 25 um)."

CONNECTICUT
SUPPLEMENTAL SPECIFICATION
SECTION 12.20
CONSTRUCTION SIGNS—
TYPE III REFLECTIVE SHEETING

Delete the entire Section, including "**Type III Reflective Sheeting**" *in the title, and replace it with the following:*

SECTION 12.20
CONSTRUCTION SIGNS

12.20.01—Description: Under this item the Contractor shall furnish, install and remove construction signs with retroreflective sheeting and their required portable supports or metal sign posts that comply with the requirements of NCHRP Report 350 (TL-3) or MASH for Category 2 Devices. The construction signs and their required portable supports or metal sign posts shall comply with the signing requirements stated in the item "Maintenance and Protection of Traffic," as shown on the plans and/or as directed by the Engineer. The Contractor shall furnish a sufficient number of signs to provide the signing patterns for all operations which are being undertaken concurrently.

12.20.02—Materials: Prior to using the construction signs and their portable supports, the Contractor shall submit to the Engineer a copy of the Letter of Acceptance issued by the FHWA to the manufacturer documenting that the devices (both sign and portable support tested together) comply with the requirements of NCHRP Report 350 (TL-3) or MASH for Category 2 Devices.

All sign faces shall be rigid and reflectorized and shall meet the requirements of Article M.18.09. If used as rigid substrate, sheet aluminum sign blanks shall comply with the requirements of Article M.18.13. Metal sign posts shall comply with the requirements of Article M.18.14. Application of retroreflective sheeting, legends, symbols, and borders shall comply with the requirements specified by the retroreflective sheeting manufacturer. Attachments shall be provided so that the signs can be firmly attached to the portable sign supports or metal posts without causing damage to the signs.

12.20.03—Construction Methods: The signs and their portable supports or metal posts shall comply with the requirements as shown on the plans and the latest edition of the "Manual on Uniformed Traffic Control Devices." Drawings of the signs, showing placement and dimensions of legend and border, are available for inspection at the Division of Traffic, Connecticut Department of Transportation.

Various types of portable sign supports may be used. These portable supports shall be fabricated in such a manner as to minimize the possibility of the signs being blown over or displaced by the wind from passing vehicles and are to be of a yielding type to withstand impact with minimal damage to the signs, supports, or vehicles. Portable sign supports shall be approved by the Engineer before they are utilized on the Project. Mounting height of signs on portable sign supports shall be a minimum of 1 ft (0.3 m)

and a maximum of 2 ft (0.6 m), measured from the pavement to the bottom of the sign.

Signs in other than good condition shall be replaced with acceptable signs as determined by the Engineer.

Suitable attachments shall be provided so that the signs can be firmly attached to the portable sign supports or metal posts without causing damage to the signs.

The following types of construction signs shall not be used: mesh, non-rigid, roll-up, corrugated or waffle board types substrates, foam core and composite aluminum sign substrates.

Field Performance: Retroreflective sheeting processed and applied to sign blank materials in accordance with the sheeting manufacturer's recommendations, shall perform effectively for a minimum of three (3) years. The retroreflective sheeting will be considered unsatisfactory if it has deteriorated due to natural causes to the extent that: (1) the sign is ineffective for its intended purpose when viewed from a moving vehicle under normal day and night driving conditions; or (2) the coefficient of retroreflection is less than 100 when measured at 0.2 degree observation angle and -4 degree entrance angle. All measurements shall be made after sign cleaning according to the sheeting manufacturer's recommendations.

Ineffective signs, as determined by the Engineer and in accordance with the ATSSA guidelines contained in "Quality Standards for Work Zone Traffic Control Devices," shall be replaced by the Contractor at no cost to the State.

Signs and their portable sign supports or metal posts that are no longer required shall be removed from the Project and shall remain the property of the Contractor.

12.20.04—Method of Measurement: The work to furnish, install and remove construction signs will be measured for payment by the number of square feet (square meters) of sign face delivered and used on the Project. Sign supports will not be measured for payment.

12.20.05—Basis of Payment: This item will be paid for at the Contract unit price per square foot (square meter) for "Construction Signs," delivered and used on the Project, which price shall include the signs, portable sign supports, metal sign posts and all hardware required to attach the sign to the support or posts. Each sign and support or posts furnished will be paid for once, regardless of the number of times used on the Project.

Pay Item	Pay Unit
Construction Signs	s.f. (s.m)

CONNECTICUT
SUPPLEMENTAL SPECIFICATION
SECTION 18.00
GENERAL CLAUSES -
IMPACT ATTENUATION SYSTEMS

18.00.01—Description:

Change the end of the first sentence "... with the Specifications and in conformity with the Plans or as directed by the Engineer." *to* "… with the plans and Specifications or as directed by the Engineer."

18.00.02—Performance Criteria:

Delete the entire article and replace it with the following:

" These devices shall have approval in writing from FHWA documenting that they comply with the requirements of the NCHRP Report 350 or the AASHTO MASH for Category 3 Devices."

18.00.05—Delineation of Impact Attenuation Systems:

Delete the entire article and replace it with the following:

" All impact attenuation systems shall have an attenuator reflector attached to the front of the system, as shown on the plans."

CONNECTICUT
SUPPLEMENTAL SPECIFICATION
SECTION 18.06
TYPE D PORTABLE IMPACT ATTENUATION SYSTEM

18.06.02—Materials:

Delete the first two paragraphs and replace with the following:

“ Prior to using a new TMA, the Contractor shall submit to the Engineer a materials certificate in accordance with Article 1.06.07 for each system supplied and a copy of the FHWA Letter of Acceptance issued to the manufacturer documenting that the device complies with the requirements of the NCHRP Report 350 (TL-3) or the AASHTO MASH for Category 3 Devices.

If the system is not furnished new, the Contractor shall document and demonstrate to the Engineer’s satisfaction that the system complies with the requirements of a new system, NCHRP Report 350 (TL-2), or the AASHTO MASH and may be used until the end of the attenuation device's useful service life.”

In the second sentence of the sixth paragraph, change “Type III retro-reflective” *to* “Type IV retroreflective.”

CONNECTICUT
SUPPLEMENTAL SPECIFICATION
SECTION M.03
PORTLAND CEMENT CONCRETE

Delete the entire Section and replace it with the following:

SECTION M.03
PORTLAND CEMENT CONCRETE

M.03.01 - Component Materials
M.03.02 - Mix Design Requirements
M.03.03 - Producer Equipment and Production Requirements
M.03.04 - Curing Materials
M.03.05 - Non Shrink, Non Staining Grout
M.03.06 - Expansive Cement for Anchoring
M.03.07 - Chemical Anchors
M.03.08 - Joint Materials
M.03.09 - Protective Compound/Sealers
M.03.10 - Formwork

M.03.01 – Component Materials

1. Coarse Aggregate: Coarse aggregate shall be broken stone, gravel, or reclaimed concrete aggregate defined as mortar-coated rock, consisting of clean durable fragments of uniform quality throughout. It shall be free from soft, disintegrated pieces, mud, dirt, organic or other injurious material and shall not contain more than 1 percent of dust by mass, as determined by AASHTO T-11. Coarse aggregate of a size retained on a 1-inch (25 mm) square opening sieve shall not contain more than 8% of flat or elongated pieces, whose longest dimension exceeds 5 times their maximum thickness. Heating or cooling of coarse aggregates may be required to meet concrete mix temperature requirements at time of placement.

(a) Soundness: When tested with magnesium sulfate solution for soundness, using AASHTO Method T 104, coarse aggregate shall not have a loss of more than 10% at the end of 5 cycles.

(b) Loss on Abrasion: When tested by means of the Los Angeles Machine, using AASHTO Method T 96, coarse aggregate shall not have a loss of more than 40%.

(c) Gradation: Grading and stone sizes of the coarse aggregate shall conform to Article M.01.01 as determined by AASHTO T-27. All coarse aggregate proportions shall be approved in advance by the Transportation Division Chief (TDC) as part of the Mix Design requirements.

(d) Storage: Aggregate stockpiles shall be located on smooth, hard, sloped/well-drained areas. Each source and gradation shall have an individual stockpile or bin. Aggregates shall be handled from stockpiles or other sources to the batching plant in such manner as to minimize segregation of the material. Aggregates that have become segregated, or mixed with earth or foreign material, shall not be used.

(e) Reclaimed Concrete Aggregate: In addition to the above requirements (a-d), when reclaimed concrete aggregate is proposed, it shall be tested for chloride in AASHTO T-260 "Sampling and Testing for Chloride Ion in Concrete and Concrete Raw Materials." Aggregate shall not be used if the chloride content as determined from this test exceeds 0.5 pound/cubic yard (297 g/cubic meter). Regardless of chloride content, reclaimed concrete aggregate shall not be used in concrete mixes used for pre-stressed concrete construction.

2. Fine Aggregate: Fine aggregate shall be natural or manufactured sand consisting of clean, hard, durable, uncoated particles of quartz or other rock, free from lumps of clay, soft or flaky material, mica, loam, organic or other injurious material. In no case shall fine aggregate containing lumps of frozen material be used. Heating or cooling of fine aggregates may be required to meet concrete mix temperature requirements at time of placement.

For continued shipments of fine aggregate from a given source, the fineness modulus of any sample shall not vary more than 0.20 from the base fineness modulus. The base fineness modulus for a source shall be established by the Engineer and may be revised based on current testing results.

(a) Fine Material: Fine aggregate shall contain not more than 3% of material finer than a #200 sieve (75µm), as determined by AASHTO T 11.

(b) Organic Impurities: Fine aggregate subjected to the colorimetric test shall not produce a color darker than Gardner Color Standard No. 11, using AASHTO T 21. If the fine aggregate fails to meet this requirement, the provisions of AASHTO M 6, Section 7.2.3, may apply.

(c) Gradation: Fine aggregate gradation shall be within the ranges listed in Table M.03.01-1 for any source. All fine aggregate proportions shall be approved in advance by the TDC as part of the Mix Design requirements.

(d) Soundness: When tested with magnesium sulfate solution for soundness, using AASHTO T 104, fine aggregate shall not have a loss of more than 10% at the end of 5 cycles. Fine aggregate that fails to meet this requirement, but meets all other requirements, may be allowed for use on a restricted basis with the approval of the Engineer on a case-by-case basis. Typically concrete forming any surface subject to polishing or erosion from running water will not be allowed to contain such material.

(e) Storage: Aggregate stockpiles shall be located on smooth, hard, sloped/well-drained areas. Each source and gradation shall have an individual stockpile or bin. Aggregates shall be handled from stockpiles or other sources to the batching plant in such manner as to minimize segregation of the material. Aggregates that have become segregated, or mixed with earth or foreign material, shall not be used.

Table M.03.01-1 TOTAL % PASSING BY WEIGHT

Sieve Size	3/8" (9.5mm)	No. 4 (4.75mm)	No. 8 (2.36mm)	No. 16 (1.18mm)	No. 30 (600µm)	No. 50 (300µm)	No. 100 (150µm)
Percent Passing	100	95-100	80-100	50-85	25-60	10-30	2-10

3. Cement:

(a) Portland: Types I, II, and III Portland cement shall conform to the requirements of AASHTO M 85. Type I and Type III Portland cement shall be used only when required or expressly permitted by the Project specification or the Engineer. The use of Type I or III will require that these mixtures be submitted as Non-standard Mix Designs. All cement shall be provided by a mill participating in the Departments' Cement Certification program. The requirements of the Certification Program are detailed in the Department's Quality Assurance Program for Materials.

(b) Pre-Blended Cements: Binary or Ternary cements consisting of Portland Cement and supplemental cementitious materials may be used provided that all the requirements of Subarticles M.03.01- 3(a) and -3(c) are met.

(c) Replacement Materials: Unless already approved as a Standard Mix Design, any Contractor proposed Mix Designs with partial replacement of Portland Cement (PC) with fly ash or ground granulated blast furnace slag (GGBFS), shall be submitted in writing to the Engineer for approval prior to the start of work, on a project-by-project basis. The type of material, source, and the percentage of the PC replaced shall be clearly indicated. Upon request, a Certified Test Report for the cement replacement material shall be provided to the Engineer for use during the Mix Design review.

1. Fly Ash: Fly ash to be used as a partial replacement for Portland cement shall meet the requirements of AASHTO M 295, either Class C or Class F, including the uniformity requirements of Table 2A. Loss on Ignition for either class of fly ash shall not exceed 4.0%. Fly ash may be used to replace up to a maximum of 20% of the required Portland cement. The fly ash shall be substituted on a weight (mass) basis, with a minimum of 1 pound (45 kg) of fly ash for 1 pound (45 kg) of Portland cement. Different classes of fly ash or the same class from different sources shall not be permitted on any single project without the written approval of the Engineer.
2. Ground Granulated Blast Furnace Slag (GGBFS): GGBFS used as a partial replacement for Portland cement shall conform to the requirements of AASHTO M 302/ASTM C989, Grade 100 or 120. As determined by the Engineer, GGBFS may be used to replace a maximum of 30% of the required Portland cement. The Engineer may restrict or prohibit the use of GGBFS if ambient temperatures anticipated during the placement and initial curing of the concrete are low. The GGBFS shall be substituted on a weight (mass) basis, with a minimum of 1 pound (45 kg) of slag for 1 pound (45 kg) of Portland cement. Different sources of GGBFS shall not be permitted on any single project without the written approval of the Engineer.

4. Water: All water used in the mixing of concrete shall be clear in appearance and free from oil, salt, acids, alkalis, sugar, and organic matter. Surface water may be used if not taken from shallow or muddy sources; classified as Class C or Class D on the Department of Energy and Environmental Protection (DEEP) Water Quality Classification mapping; and accommodations have been made to prevent contaminants from entering the supply to the satisfaction of the Engineer. The Engineer may request that water from any surface or ground source be tested in accordance with AASHTO T26 and AASHTO D512 if the appearance or scent of the water is suspect. To be acceptable, the pH of the water must not be less than 6.0 or greater than 8.0 and Chloride Ion Concentration of the water must not exceed 250ppm (250 mg/L). Potable water taken directly from a municipal or regional water supply may be used for mixing concrete without testing. Heating or cooling of water may be required to meet mix temperature requirements at time of placement.

5. Admixtures: All admixtures shall perform their function without injurious effects upon the concrete. If requested by the TDC, the Contractor shall present a certified statement from a recognized laboratory attesting to this requirement. A "recognized" laboratory is any cement and concrete laboratory approved and inspected regularly by the Cement and Concrete Reference Laboratory (CCRL). The statement shall contain results of compression tests of cylinder specimens made with concrete utilizing the admixture(s) in proportions equal to those proposed by the Contractor. The results of at least 5 standard 6-inch x 12-inch (150 mm x 300 mm) cylinders of each mix design shall be listed with the results of at least 5 like-sized cylinders not utilizing the admixture(s). Specimens must be made and cured in the laboratory in accordance with AASHTO T 126 and will be tested in accordance with AASHTO T 22.

(a) Air-Entraining Admixtures: In the event that air entrained concrete is required, an admixture conforming to the requirements of AASHTO M 154 may be used. Tests for 7 and 28-day compressive and flexural strengths and resistance to freezing and thawing are required, but tests for bleeding, bond strength and volume change will not be required.

(b) Other Chemical Admixtures: In the event that concrete properties are specified that require the use of additional admixtures, or the Contractor proposes the use of additional admixtures to facilitate placement, the admixtures shall conform to the requirements of AASHTO M194M/M, including the 1 year performance data.

M.03.02 – Mix Design Requirements

1. Standard ConnDOT Mix Designs: Standard Mix Designs shall be designed in accordance with applicable sections of ACI 211 and ACI 318. The mixtures shall consist of Portland cement, fine aggregate, coarse aggregate, admixtures[1], and water proportioned in accordance with Table M.03.02-1. The mixtures shall also be designed to obtain the physical properties of plastic concrete as specified in Article 6.01.03.

Table M.03.02-1

TYPE	28-day Minimum Compressive Strength psi (megapascals)	Water / Cement; or Water / Cement plus other approved Cementitious Material, by weight (mass), Maximum	Minimum Cement[2] Required lbs/cy (kg/cm)	Maximum Aggregate Size Required Section M.01.01
Class "A"	3300 (23)	0.53	615 (365)	No. 4
Class "C"	3300 (23)	0.53	658 (390)	No. 6
Class "F"	4400 (30)	0.44	658 (390)	No. 6
Pavement	3500 (24)	0.49	615 (365)	No. 4
Slope Paving	2200 (15)	0.69	455 (270)	No. 3

[1] Approved admixtures may be used in proportions recommended by the manufacturer.

[2] Portland Cement may be partially replaced within a Standard Mix Design by other approved cementitious material meeting the requirements of Article M.03.01-3(b) if permitted by the Engineer.

Mix designs shall indicate the dosage of admixtures anticipated to provide plastic properties required in the Project specification. Properties of standard classes of concrete in the plastic state are listed in Article 6.01.03

Standard Mix Designs are required to be designed and submitted by the concrete producers, and are approved by the Department on a standing basis. Submittal or re-approval of these Standard Mix Designs on an annual basis is not required. Previously approved producer-designed Standard Mixes that have a record of satisfactory performance may be utilized on Department projects unless there is a change in the gravimetric properties or the sources of any materials. Revisions to the Standard Mix Designs, which include changes in component sources, can be submitted at any time to the TDC, but must be approved prior to use on Department projects.

2. Non-Standard ConnDOT Mix Designs: Any proposed Mix Designs that do not comply with Table M.03.02-1 are required to be submitted 15 days prior to use on a project-by-project basis and be approved by the TDC prior to use. The use of an approved admixture with an otherwise approved Standard Mix Design is not considered non-standard.

All Non-standard Mix Designs used for load-bearing structures shall contain a minimum of 658 lbs/cubic yard (390 kg/cubic meter) of cementitious materials.

Concrete used in applications such as flowable fill or controlled low-strength material may be designed with less than 658 lbs/cubic yard (390 kg/cubic meter) of cementitious materials.

M.03.03 - Producer Equipment and Production Requirements

1. General Requirements: The source of the concrete must be approved by the Engineer prior to use on Department projects. Specifically the location and capacity of the central mix or dry batch plant, and complement of truck mixers/haulers, shall be adequate for continuous placement of concrete on a typical Department project. Approval may be revoked at any time in accordance with Section 1.06.01.

(a) Inspection: The production facility supplying hydraulic cement concrete shall have a current Certification of Ready Mixed Concrete Production Facilities from the National Ready Mixed Concrete Association (NRMCA), or equivalent certification approved by the Engineer.

(b) In addition to the requirements of approved third party certification, the facility shall produce batch tickets that conform to Subarticle 6.01.03-3(a).

(c) Quality Control: The Contractor is responsible for all aspects of Quality Control (QC). As determined by the Engineer, should material delivered to a project not meet specification, the Contractor may be required to submit to the Engineer a corrective procedure for approval within 3 calendar days. The procedure shall address any minor adjustments or corrections made to the equipment or procedures at the facility.

(d) Suspension: As determined by the Engineer, repeated or frequent delivery of deficient material to a Department project may be grounds for suspension of that source of material. A detailed QC plan that describes all QC policies and procedures for that facility may be required to formally address quality issues. This plan must be approved by the Engineer and fully implemented, prior to reinstatement of that facility.

2. Hand Mixed Concrete: Hand mixing shall be permitted only with the permission of the Engineer. Hand mixed batches shall not exceed 1/2 cubic yard (0.5 cubic meter) in volume. Hand mixing will not be permitted for concrete to be placed under water.

M.03.04 - Curing Materials

1. Water: Any water source deemed acceptable by the Engineer for mixing concrete may be used to provide water for curing purposes. Surface water may be used if classified as Class C or Class D on the Department of Energy and Environmental Protection (DEEP) Water Quality Classification mapping and accommodations have been made to prevent contaminants from entering the supply to the satisfaction of the Engineer.

In general, water shall not be taken from shallow or muddy sources. In cases where sources of supply are relatively shallow, the intake pipe shall be enclosed to exclude silt, mud, grass, etc.; and the water in the enclosure shall be maintained at a depth of not less than 2 feet (610 mm) under the intake pipe.

2. Mats: Mats for curing concrete shall be capable of maintaining moisture uniformly on the surface of the concrete. The mats shall not contain any materials such as dyes, sugar, etc., that may be injurious to the concrete.

The length or width of the mats shall be sufficient to cover all concrete surfaces being cured. Should more than one mat be required, sufficient overlap shall be provided by the Contractor as determined by the Engineer.

3. Liquid Membrane-Forming Compound: Liquid membrane-forming compound shall conform to the requirements of AASHTO M 148 Type 2, Class B, or shall be a water-soluble linseed oil-based compound conforming to the requirements of AASHTO M 148, Type 2.

4. White Polyethylene Sheeting (Film): White polyethylene sheeting (film) shall conform to the requirements of AASHTO M 171.

M.03.05 - Non Shrink, Non Staining Grout

1. Bagged (pre-mixed): Bagged (pre-mixed) formulations of non-shrink grout shall meet the requirements of ASTM C 1107. The grout shall be mixed with potable water for use. The grout shall be mixed to a flowable consistency as determined by ASTM C 230. All bagged material shall be clearly marked with the manufacturer's name, date of production, batch number, and written instructions for proper mixing, placement and curing of the product.

2. Bulk: The Contractor may formulate and design a grout mix for use on the Project in lieu of using a pre-bagged product. The Contractor shall obtain prior written approval of the Engineer for any such proposed Mix Design. Any such Mix Design shall include the proportions of hydraulic cement, potable water, fine aggregates, expansive agent, and any other necessary additive or admixture. This material shall meet all of the same chemical and physical requirements as shall the pre-bagged grout, in accordance with ASTM C 1107.

M.03.06 – Expansive Cement for Anchoring

The premixed anchoring cement shall be non-metallic, concrete gray in color and prepackaged. The mix shall consist of hydraulic cement, fine aggregate, expansive admixtures and water conforming to the following requirements:

1. The anchoring cement shall have a minimum 24 hour compressive strength of 2,600 psi (18 megapascals) when tested in accordance with ASTM C 109.

2. The water content of the anchoring cement shall be as recommended by the manufacturer. Water shall conform to the requirements of Subarticle M.03.01-4.

The Contractor shall provide a Certified Test Report and Materials Certificate for the premixed anchoring cement in conformance with Article 1.06.07. The Contractor shall also provide, when requested by the Engineer, samples of the premixed anchoring cement for testing and approval.

M.03.07 – Chemical Anchors

Chemical anchor material must be listed on the Departments' Qualified Products List and approved by the Engineer for the specified use.

The chemical anchor material shall be epoxy or polyester polymer resin. It shall not contain any metals or other products that promote corrosion of steel. The Contractor shall supply the Engineer with a Certified Test Report and Materials Certificate for the chemical anchor material in conformance with Article 1.06.07. When requested by the Engineer, the Contractor shall also provide samples of the chemical anchor material.

M.03.08 – Joint Materials

1. Transverse Joints for Concrete Pavement: Transverse joints shall consist of corrosion resistant load transfer devices, poured joint seal and in addition, in the case of expansion joints, expansion joint filler all conforming to the following requirements:

- **(a)** The corrosion resistant load transfer device shall be coated steel or sleeved steel or be made of corrosion resistant material. The dimensions of any devices used shall be as shown on the plans, exclusive of any coating or sleeving. Core material of coated or sleeved metallic devices shall be steel meeting the requirements of AASHTO M 255M/M 255 Grade 520, or steel having equal or better properties and approved by the Engineer. Nonmetallic devices shall meet the various strength requirements applicable to metallic devices as well as all other requirements stated herein.
- **(b)** All coated load transfer devices shall conform to the requirements of AASHTO M 254. Uncoated or sleeved load transfer devices shall meet the applicable physical requirements of AASHTO M 254. The use of field applied bond breakers will not be permitted.

(c) The basis of acceptance for corrosion resistant load transfer devices shall be the submission by the Contractor of a minimum of 2 samples accompanied by Certified Test Reports conforming to the requirements of Article 1.06.07 demonstrating that the load transfer device conforms to the requirements of AASHTO M 254 for the type of device supplied. The Engineer reserves the right to reject any load transfer device which he deems unsatisfactory for use.

2. **Joint Filler for Concrete Curbing:** Expansion joint filler shall be either preformed expansion joint filler or wood joint filler as indicated on the plans and shall conform to the following requirements:
   (a) Preformed expansion joint filler shall be the bituminous cellular type and shall conform to the requirements of AASHTO M 213.
   (b) Boards for wood joint filler shall have 2 planed sides and shall be redwood, cypress or white pine. Redwood and cypress boards shall be of sound heartwood. White pine boards shall be of sound sapwood. Occasional small, sound knots and medium surface checks will be permitted provided the board is free of any defects that will impair its usefulness for the purpose intended. The joint filler may be composed of more than one length of board in the length of the joint, but no board of a length less than 6 feet (1.9 meters) shall be used; and the separate boards shall be held securely to form a straight joint. Boards composed of pieces that are jointed and glued shall be considered as one board.
   (c) Dimensions shall be as specified or shown on the plans; and tolerances of plus 1/16-inch (1.6 millimeters) thickness, plus 1/8-inch (3.2 millimeters) depth and plus 1/4-inch (6.4 millimeters) length will be permitted.
   (d) All wood joint filler boards shall be given a preservative treatment by brushing with creosote oil conforming to AASHTO M 133. After treatment, the boards shall be stacked in piles, each layer separated from the next by spacers at least 1/4 inch (6.4 millimeters) thick; and the boards shall not be used until 24 hours after treatment. Prior to concreting, all exposed surfaces of the wood filler shall be given a light brush coating of form oil.
   (e) Testing of board expansion joint filler shall be in accordance with pertinent sections of AASHTO T 42.
3. **Longitudinal Joint Devices:** The metal used in the fabrication of longitudinal joint devices shall conform to ASTM requirements for each type of metal used. The dimensions shall be as shown on the plans.
4. **Expansion Joint Fillers for Bridges and Bridge Bearings:**
   (a) Preformed expansion joint filler for bridges shall conform to the requirements of AASHTO M 153, Type I or Type II.
   (b) Pre-molded expansion joint filler for bridge bearings shall conform to the requirements of AASHTO M 33.
5. **Joint Sealants:**
   (a) **Joint Sealer for Pavement:** The joint sealer for pavement shall be a rubber compound of the hot-poured type and shall conform to the requirements of AASHTO M 324 Type II unless otherwise noted on the plans or in the special provisions.
   (b) **Joint Sealer for Structures:** Structure joint sealers shall be one of the following type sealants:
      1. Where "Joint Seal" is specified on the plans, it shall conform to the Federal Specifications SS-S-200-E (Self-leveling type), TT-S-0227E (COM-NBS) Type II-Class A (Non-sag type), or 1 component polyurethane-base elastomeric sealants conforming to FS TT-S-00230C Type II-Class A or an approved equal.

         A Certified Test Report will be required in accordance with Article 1.06.07, certifying the conformance of the sealant to the requirements set forth in the Federal Specification. Should the consignee noted on a Certified Test Report be other than the Prime Contractor, a Materials Certificate shall be required to identify the shipment.

2. Where "Silicone Joint Sealant" is specified on the plans, it shall be one of the following or an approved equal:
   - Sealant, manufactured by the Dow Corning Corporation, Midland, Michigan Dow Corning 888 Silicone Joint Sealant or
   - Dow Corning 888-SL Self-Leveling Silicone Joint 48686-0994

6. **Closed Cell Elastomer:** The closed cell elastomer shall conform to the requirements of ASTM D1056, Grade RE-41 B2. The elastomer shall have a pressure-sensitive adhesive backing on one side.

   The Contractor shall deliver the closed cell elastomer to the job site a minimum of 30 days prior to installation. Prior to the delivery of the closed cell elastomer, the Contractor shall notify the Engineer of the date of shipment and the expected date of delivery. Upon delivery of the closed cell elastomer to the job site, the Contractor shall immediately notify the Engineer.

   Each separate length, roll or container shall be clearly tagged or marked with the manufacturer's name, trademark and lot number. A lot is defined as that amount of closed cell elastomer manufactured at one time from one batch of elastomer. A batch is defined as that amount of elastomer prepared and compounded at one time. The Contractor shall furnish a Certified Test Report in accordance with Article 1.06.07, confirming the conformance of the closed cell elastomer to the requirements set forth in these specifications. Should the co-signee noted on a Certified Test Report be other than the Prime Contractor, a Materials Certificate shall be required to identify shipment.

   The Contractor shall furnish a 1 foot (305 millimeter) length of closed cell elastomer in each lot for purposes of inspection and testing by the Engineer. The Engineer will cut a 1 foot (305 millimeter) sample from each lot and inspect the sample for conformance to size, and perform physical tests on the sample as deemed necessary.

   The Engineer shall reject any lot or portion of a lot that does not conform to the requirements stated herein. A rejected lot or portion of a lot may be resubmitted provided the Contractor has removed or corrected, in a manner acceptable to the Engineer, all non-conforming material.

M.03.09 – Protective Compound/Sealers

The brand and type of material must be listed on the Department's Qualified Products List and approved by the Engineer for the specified use.

M.03.10 – Formwork

1. **Stay-in-place Forms:** Material for stay-in-place metal forms shall be made of zinc-coated (galvanized) steel sheet conforming to ASTM Specification A653 (Structural Steel (SS) Grade 33 through 80). The minimum thickness shall be 20 gage (810 micrometers). Coating weight shall conform to ASTM A924, Class G235, and shall otherwise meet all requirements relevant to steel stay-in-place metal forms and the placing of concrete as specified herein and as noted in the Contract documents.

   Form supports shall either be fabricated and conform to the same material requirements as the forms, or be fabricated from structural steel conforming to the requirements of ASTM A36 and shall be hot-dip galvanized in accordance with ASTM A123.

   Lightweight filler material for forms shall be as recommended by the form manufacturer.
2. **Temporary Forms and Falsework:** Forms and Falsework shall be of wood, steel or other material approved by the Engineer. This approval does not relieve the Contractor from employing adequately sized materials of sufficient rigidity to prevent objectionable distortion of the formed concrete surfaces caused by pressure of the plastic concrete and other loads incidental to the construction operations.

CONNECTICUT
SUPPLEMENTAL SPECIFICATION
SECTION M.06
METALS

M.06.01 – Reinforcing Steel:

1. Bar Reinforcement:

Delete the third paragraph and replace it with:

"Epoxy coated bar reinforcement shall conform to the requirements of ASTM A 615/A 615M, Grade 60 (420) and shall be epoxy coated to the requirements of ASTM A 775/A 775M. All field repairs of the epoxy coating shall conform to the requirements of ASTM D 3963/D 3963M."

M.06.02—Structural Steel and Other Structural Materials:

Delete the entire article and replace it with the following:

"M.06.02—Structural Steel: The materials for this work shall conform to the following requirements:

1. **Structural Steel:**
   Structural steel for bridges shall conform to the designation shown on the plans. Unless otherwise indicated in the plans or specifications, structural steel for non-bridge related members or components shall conform to ASTM A709/A709M, Grade 36 (250).

   All surfaces of steel plates and shapes used in the fabrication of bridge girders shall be blast cleaned and visually inspected by the Contractor prior to any fabrication or preparation for fabrication. Blast cleaning shall conform to the requirements of SSPC-SP-6-Commercial Blast.

   All steel plates and shapes used in the fabrication of bridge girders shall be substantially free from pitting and gouges, regardless of the cause. Substantially free is defined as:
   - The measured surface area of all pits and gouges regardless of depth represent less than 1% of the surface area of theplate or shape.
   - No pit or gouge greater than 1/32 (0.08mm) inch deep.
   - No pit or gouge closer than six inches (15.25 cm) from another.

Any repair of plates or shapes will be performed in accordance with ASTM A6/A 6M.

2. **Anchor Bolts:**
Unless otherwise designated on the plans, anchor bolts, including suitable nuts and washers, shall conform to the following requirements:

Anchor bolt assemblies shall conform to the requirements of ASTM F1554, Grade 36 (250). All components of the bolt assembly shall be galvanized in conformance with ASTM A 153/A 153M.

Certified Test Reports and Material Samples: The Contractor shall submit notarized copies of Certified Test Reports in conformance with Article 1.06.07. Prior to incorporation into the work, the Contractor shall submit samples of the anchor bolt assemblies to the Engineer for testing in accordance with the latest edition of the "Schedule of Minimum Requirements for Acceptance Testing". One sample shall be submitted for each diameter, material designation, grade or coating of anchor bolt assembly.

3. **High Strength Bolts:** High strength bolts, including suitable nuts and hardened washers, shall conform to the following requirements:

   a) High strength bolts shall conform to ASTM A325 or ASTM A490 as shown on the plans. High-strength bolts used with coated steel shall be mechanically galvanized, unless otherwise specified. High-strength bolts used with uncoated weathering grades of steel shall be Type 3.

   Nuts for ASTM A325 bolts shall conform to ASTM A563, grades DH, DH3, C, C3 and D. Where galvanized high-strength bolts are used, the nuts shall be galvanized, heat treated grade DH or DH3. Where Type 3 high-strength bolts are used, the nuts shall be grade C3 or DH3.

   Nuts for ASTM A490 bolts shall conform to the requirements of ASTM A563, grades DH and DH3. Where Type 3 high-strength bolts are used, the nuts shall be grade DH3.

   All galvanized nuts shall be lubricated with a lubricant containing a visible dye of any color that contrasts with the color of the galvanizing. Black bolts must be oily to the touch when delivered and installed.

   Circular flat and square or rectangular beveled, hardened steel washers shall conform to ASTM F436. Unless otherwise specified, galvanized washers shall be furnished when galvanized high-strength bolts are specified, and washers with atmospheric corrosion resistance and weathering characteristics shall be furnished when Type 3 high-strength bolts are specified.

   Compressible-washer-type direct tension indicator washers, used in conjunction with high strength bolts, shall conform to ASTM F959. Where galvanized high-strength bolts are used, the washers shall be galvanized in accordance with ASTM B695, Class 50. Where Type 3 high-strength bolts are used, the washers shall be galvanized in accordance with ASTM B695, Class 50 and coated with epoxy.

b) **Identifying Marks:** ASTM A325 for bolts and the specifications referenced therein for nuts require that bolts and nuts manufactured to the specification be identified by specific markings on the top of the bolt head and on one face of the nut. Head markings must identify the grade by the symbol "A325", the manufacturer and the type, if Type 2 or 3. Nut markings must identify the grade, the manufacturer and if Type 3, the type. Markings on direct tension indicators must identify the manufacturer and Type "325". Other washer markings must identify the manufacturer and if Type 3, the type.

   ASTM A490 for bolts and the specifications reference therein for nuts require that bolts and nuts manufactured to the specifications be identified by specific markings on the top of the bolt head and on one face of the nut. Head markings must identify the grade by the symbol "A490", the manufacturer and the type, if Type 2 or 3. Nut markings must identify the grade, the manufacturer and if Type 3, the type. Markings on direct tension indicators must identify the manufacturer and Type "490". Other washer markings must identify the manufacturer and if Type 3, the type.

c) **Dimensions:** Bolt and nuts dimensions shall conform to the requirements for Heavy Hexagon Structural Bolts and for Heavy Semi-Finished Hexagon Nuts given in ANSI Standard B18.2.1 and B18.2.2, respectively.

d) **Galvanized Bolts:** Galvanized bolts shall conform to ASTM A325, Type 1. The bolts shall be hot-dip galvanized in accordance with ASTM A153, Class C or mechanically galvanized in accordance with ASTM B695, Class 50. Bolts, nuts, and washers of any assembly shall be galvanized by the same process. The nuts shall be overtapped to the minimum amount required for the fastener assembly, and shall be lubricated with a lubricant containing a visible dye so a visual check can be made for the lubricant at the time of field installation. Galvanized bolts shall be tension tested after galvanizing. ASTM A 490 bolts shall not be galvanized.

e) **Test Requirements:** The maximum hardness of A325 bolts 1" or less in diameter shall be 33 HRC.

   Plain, ungalvanized nuts shall have a minimum hardness of 89 HRB.

   Proof load tests, in accordance with the requirements of ASTM F606 Method 1, shall be required for the bolts. Wedge tests of full-size bolts are required in accordance with Section 8.3 of ASTM A325. Galvanized bolts shall be wedge tested after galvanizing. Proof load tests of ASTM A563 are required for nuts. Proof load tests for nuts used with galvanized bolts shall be performed after galvanizing, overtapping and lubricating.

Rotational-capacity tests are required and shall be performed on all plain or galvanized (after galvanizing) bolt, nut and washer assemblies by the manufacturer or distributor prior to shipping and by the Contractor at the job site.

The thickness of galvanizing on bolts, nuts and washers shall be measured. On bolts, it shall be measured on the wrench flats or on top of the bolt head, and on nuts it shall be measured on the wrench flats.

f) Certified Test Reports and Materials Certificates: The Contractor shall submit notarized copies of Certified Test Reports and Materials Certificates in conformance with Article 1.06.07 for fastener assemblies. In addition the Certified Test Reports and Materials Certificates shall include the following:

a. Mill test reports shall indicate the place where the material was melted and manufactured.

b. Test reports for proof load tests, wedge tests, and rotational-capacity tests shall indicate where the tests were performed, date of tests, location of where the components were manufactured and lot numbers.

c. The test report for galvanized components shall indicate the thickness of the galvanizing.

g) Material Samples: Prior to incorporation into the work, the Contractor shall submit samples of the bolt assemblies to the Engineer for testing in accordance with the latest edition of the "Schedule of Minimum Requirements for Acceptance Testing". Samples shall be submitted for each diameter, length, material designation, grade, coating and manufacturer of bolt assembly.

4. Welded Stud Shear Connectors:

a) Materials: Stud shear connectors shall conform to the requirements of ASTM A 108, cold-drawn bar, Grades 1015, 1018 or 1020, either semi- or fully-killed. If flux-retaining caps are used, the steel for the caps shall be of a low carbon grade suitable for welding and shall comply with ASTM A 109.

Stud shear connectors shall be of a design suitable for electrically end-welding to steel with automatically timed stud welding equipment. The studs shall be of the sizes and dimensions noted on the plans. Flux for welding shall be furnished with each stud, either attached to the end of the stud or combined with the arc shield for automatic application in the welding operation. Each stud shall be furnished with a disposable ferrule of sufficient strength to remain intact during the welding operation and not crumble or break; it shall not be detrimental to the weld or create excessive slag.

Tensile properties, as determined by tests of bar stock after drawing or of finished studs, shall conform to the following requirements in which the yield strength is as determined by the 0.2% offset method:

Tensile strength (min.)	60,000 psi (415 megapascals)
Yield strength (min.)	50,000 psi (345 megapascals)
Elongation (min.)	20% in 2 inches (50 millimeters)
Reduction of area (min.)	50%

b) Test Methods: Tensile properties shall be determined in accordance with the applicable sections of ASTM A 370. Tensile tests of finished studs shall be made on studs welded to test plates using a test fixture similar to that shown in Figure 7.2 of the current AASHTO/AWS D1.5 – Bridge Welding Code. If fracture occurs outside of the middle half of the gage length, the test shall be repeated.

c) Finish: Finished studs shall be of uniform quality and condition, free from injurious laps, fins, seams, cracks, twists, bends or other injurious defects. Finish shall be as produced by cold-drawing, cold-rolling or machining.

d) Certified Test Reports and Materials Certificates: The Contractor shall submit a certified copy of the in-plant quality control test report in conformance with Article 1.06.07. The Contractor shall submit a Materials Certificate in conformance with Article 1.06.07 for the welded studs.

e) Sample Materials for Testing: Prior to incorporation into the work, the Contractor shall submit samples of the stud shear connectors to the Engineer for testing in accordance with the latest edition of the “Schedule of Minimum Requirements for Acceptance Testing”. One sample shall be submitted for each diameter and length of welded stud."

CONNECTICUT
SUPPLEMENTAL SPECIFICATION
SECTION M.08
DRAINAGE

Delete the entire Section and replace with the following:

SECTION M.08
DRAINAGE

M.08.01 – Pipe
General
Iron/Steel
1. **Cast Iron Pipe**
2. **Coated Corrugated Metal Pipe and Coated Corrugated Metal Pipe Elbows**
3. **Perforated or Plain Coated Metal Pipe for Underdrains or Outlets**
4. **Coated Corrugated Metal Pipe Arches**
5. **Corrugated Structural Plates and Bolts**
6. **Metal Culvert Ends**

Concrete
7. **Reinforced Concrete Pipe**
8. **Reinforced Concrete Elliptical Pipe**
9. **Perforated Reinforced Concrete Pipe for Underdrains and Outlets**
10. **Slotted Drain Pipe**
11. **Reinforced Concrete Culvert Ends**

Aluminum
12. **Corrugated Aluminum Pipe**
13. **Corrugated Aluminum Pipe for Underdrains and Outlets**
14. **Corrugated Aluminum Pipe Arches**

Sealers/Gaskets
15. **Cold-Applied Bituminous Sealer**
16. **Preformed Plastic Gaskets**
17. **Flexible, Watertight, Rubber-Type Gaskets**

Plastic
18. **Corrugated Polyethylene Pipe**
19. **Geotextiles**
20. **Polyvinyl Chloride Plastic Pipe**
21. **Polyvinyl Chloride Gravity Pipe**

M.08.02 – Catch Basins, Manholes, and Drop Inlets
M.08.03 – Aggregates
1. **Bedding Material**
2. **Aggregates for Underdrains**

M.08.01 – Pipe

General

The Contractor shall submit manufacturer's material certifications for all metal and plastic pipes other than PVC, metal pipe-arches, metal fittings and metal coupling bands in accordance with Article 1.06.07.

IRON/STEEL

1. **Cast Iron Pipe:** This material shall conform to the requirements of AASHTO M 64 for Extra-Heavy Cast Iron Culvert Pipe.

2. **Coated Corrugated Metal Pipe and Coated Corrugated Metal Pipe Elbows:** This material shall conform to the following:

Pipe fabricated from zinc-coated steel sheet and aluminum-coated (Type 2) steel sheet must conform to AASHTO M 36, Type 1 or IR.

Pipe fabricated from metallic-coated and polymer-precoated steel sheet must conform to AASHTO M 245, Type 1.

Unless otherwise indicated on the plans, the corrugation size and sheet thickness shall conform to the following:

Nominal Inside Diameter (inches)	Corrugations	Minimum Specified Sheet Thickness (inches)	
6	1 1/2" X 1/4"	.052	
8, 10	1 1/2" X 1/4"	.064	
12, 15, 18 & 21	2 2/3" X 1/2"	.064	
24, 30 , 36	2 2/3" X 1/2"	.079	
42, 48	2 2/3" X 1/2"	.109	
54, 60	3" X 1" or 5” X 1”	.064	
66, 72	3" X 1" or 5” X 1”	.079	
78, 84, 90, & 96	3" X 1" or 5” X 1”	.109	
		Steel	Aluminum
18, 24, 30	Helical Rib ¾” X ¾ “ X 7 ½”	.064	.060
36	Helical Rib ¾” X ¾ “ X 7 ½”	.064	.075
42, 48 & 54	Helical Rib ¾” X ¾ “ X 7 ½”	.079	.105
60, 66, 72, 78, 84	Helical Rib ¾” X ¾ “ X 7 ½”	.109	.135

Aluminum pipe sheet thickness may be .004 inch less than specified above for 1 1/2-inch x 1/4-inch, 2 2/3-inch x 1/2-inch and 3-inch x 1-inch or 5-inch x 1-inch corrugations. Helical Rib shall be as specified above.

Zinc coated steel pipe, fittings, and coupling bands shall be coated with bituminous material as specified in AASHTO M 190 Type C. Pipe, fittings and coupling bands

fabricated from aluminum coated steel sheet (Type 2) does not require coating of bituminous material or paved invert.

Metallic-coated and polymer-precoated steel pipe, fittings, and coupling bands shall be coated as specified in AASHTO M 246, Type B. The thicker polymeric coating shall be on the inside of the pipe.

Only one type of coating will be allowed for any continuously connected run of pipe.

If elongation of the pipe is required, it shall be done by the manufacturer.

3. Perforated or Plain Coated Metal Pipe for Underdrains or Outlets: This material shall conform to the requirements of AASHTO M 36, Type III or AASHTO M 245, Type III.

(a) Perforations: The minimum diameter of perforations after asphalt coating shall be 1/4 inch.

(b) Coating: All requirements of M.08.01-2 shall apply except that the minimum thickness of the bituminous coating on zinc coated steel pipe, fittings, and coupling bands pipe shall be 0.03 inches instead of 0.05 inches.

4. Coated Corrugated Metal Pipe-Arches: This material shall conform to the requirements of AASHTO M 36, Type II, Type IIR or AASHTO M 245, Type II. All coating requirements of M.08.01-1 shall apply.

Unless otherwise indicated on the plans, the corrugation size and sheet thickness shall conform to the following:

Pipe-Arch Equivalent Diameter (Inches)	Corrugations	Minimum Sheet Thickness (Inches)
15, 18, 21	2 2/3" X 1/2"	.064
24, 30	2 2/3" X 1/2"	.079
36, 42, 48	2 2/3" X 1/2"	.109
54, 60	2 2/3" X 1/2"	.138
60, 66, 72	3" X 1" or 5” X 1”	.079
78, 84, 90, 96	3" X 1" or 5” X 1”	.109
18, 21, 24	Helical Rib ¾” X ¾ “ X 7 ½”	.064
30, 36	Helical Rib ¾” X ¾ “ X 7 ½”	.079
42, 48, 54, 60	Helical Rib ¾” X ¾ “ X 7 ½”	.109

5. Corrugated Structural Plates and Bolts: These plates and bolts are for use in the construction of metal pipe of the large diameter and for metal plate arches or pipe arches to be assembled in the field, and they shall conform to the requirements of AASHTO M 167 for corrugated metal pipe.

The dimensions of plates and details of fabrication shall conform to the requirements of the manufacturer. Where the plans call for a heavier gage for the bottom of the pipe than for the remainder of the pipe circumference, the lower fourth of the circumference shall be the minimum width of the heavier gage material.

The coating shall conform to the requirements of AASHTO M 243.

6. Metal Culvert End: The materials used in this work shall meet the pertinent requirements of Subarticles M.08.01-2 and M.08.01-4.

Bolts and fittings shall conform to the requirements of ASTM A 307 and shall be galvanized to conform to the requirements of ASTM A 153.

The units shall be coated as specified in Subarticles M.08.01-2, M.08.01-4 or M.08.01-5.

Fabrication: These units shall be formed from a rectangular sheet of metal by cutting and bending to form the desired shape. Two or more sheets may be fastened together by riveting or bolting so as to form a rectangular sheet of the required width. Skirt extensions and a top plate, as needed to complete the unit, shall be separately formed. Skirt extensions shall be riveted or bolted to the skirt.

All edges, which will be exposed above the surface of the ground, shall be reinforced before forming the unit by either of the following means:

(1) The edge shall be bent to form a semicircular roll with an exterior diameter of 1 inch, as shown in the detail drawing on the plans.

(2) A split tube of 1 inch outside diameter and not lighter than 14 gage, shall be slipped over a row of rivets spaced not more than 6 inches apart, as shown in the detail drawing on the plans.

One corrugation, matching the corrugations of the pipe or pipe-arch to which the unit is to be attached, shall be formed in the unit to insure secure and accurate alignment.

Attachment: The unit may be shop-riveted to a length of the appropriate pipe or pipe-arch, or may be field attached to the pipe or pipe arch by either of the other attachment systems shown on the plans, or by other means acceptable to the Engineer. If the unit is shop-riveted to a length of pipe or pipe-arch, this length shall be sufficient to permit proper use of standard coupling bands.

CONCRETE

7. Reinforced Concrete Pipe: Unless otherwise specified, this material shall conform to the requirements of AASHTO M 170, Class IV, as supplemented and modified by the following:

(a) Reinforcement: In circular pipe, only circular reinforcement will be allowed.

(b) Laps and Welds: The reinforcement shall be lapped not less than 2 inches and welded with an electric welding machine.

(c) Quality Assurance Testing: Circular and elliptical reinforced concrete pipe shall be tested by the three-edge bearing method prescribed in AASHTO T 280, except as follows:

1) Modified or special design pipe shall be tested to the 0.01-inch load and the ultimate load requirements as per AASHTO M 170 and M 207.

2) At the discretion of the Engineer, pipe of standard design, as specified in AASHTO M 170 and M 207, may be tested to the 0.01-inch requirement plus 10% additional load in lieu of ultimate load testing. Test pipe attaining a 0.01-inch crack will not be acceptable for use on Department projects.

3) Cores for absorption and determination of steel reinforcement shall be taken on a random basis as determined by the Engineer. The cores shall be at least 6 inches in diameter.

(d) Inspection: The pipe plant, materials, processes of manufacture and the finished pipe shall be subject to inspection and approval by the Department. The pipe manufacturer's records related to component materials, production and shipment of pipe for Department use shall be made available to the Department on request. The equipment and labor necessary for inspection, sampling and testing as required by the Department shall be furnished by the pipe manufacturer. Test equipment shall be calibrated at least once each 12 months, or as directed by the Engineer. The plant cement and aggregate scales shall be inspected and sealed by the approved agency at least once every twelve months.

(e) Preliminary Tests and Tests for Extended Deliveries: As directed by the Engineer, the Department shall select for test from the stock of any manufacturer proposing to supply pipe to the Department, 2 of each size pipe up through 30-inch diameter and 1 of each size greater than 30-inch diameter. These sample pipes shall be tested under Department supervision by the three-edge bearing method. For pipe that fails, it shall be necessary for the manufacturer to either physically isolate the rejected pipe at his plant or to provide some means to clearly indicate the unacceptability of the pipe. Either method shall be performed to the satisfaction of the Engineer. When production is resumed on any size, wall thickness or class previously rejected, preliminary tests shall be required. If 95% of all pipe tested at a particular plant from the first of the calendar year to September 30 meet specifications, including both preliminary and extended tests, it will not be necessary to perform the Fall three-edge bearing tests at this plant.

Use of compression tests on representative cylinders or cores to determine the compressive strength of the concrete incorporated into the pipe products will be at the discretion of the Engineer.

(f) Shipping: Pipe shall not be shipped until it is at least 7 days old unless earlier shipment is authorized by the Engineer on the basis of tests.

(g) Certification: Pipe will be accepted by the Department on the basis of manufacturer's certification. The manufacturer shall certify each shipment of pipe on Department Form MAT-073(PC-1), "Certification of Precast Concrete Products." Two (2) copies of this certification shall be furnished with the shipment to the Engineer at the project site.

8. Reinforced Concrete Elliptical Pipe: This material shall conform to the requirements of AASHTO M 207, Class HE IV and supplemented as follows:

(a) Manufacturing and testing shall conform to Subarticle M.08.01-7.

9. Perforated Reinforced Concrete Pipe for Underdrains and Outlets: This material shall conform to the requirements of Subarticle M.08.01-7 and shall be slotted in accordance with AASHTO M 175, Type 2, or as shown on the plans. Pipe for outlets shall not be perforated.

10. Slotted Drain Pipe: The pipe shall be asphalt coated and conform to Subarticle M.08.01-2. Concrete shall conform to Article M.03.01, Class "A" or pavement type. Concrete shall be cured in conformance with M.03. The inlet aperture shall be longitudinal on top of the pipe and may be continuous or intermittent. The opening in the pipe wall may be fabricated in the form of continuous bar risers and spacers or of intermittent cut-out segments with structural members supporting a continuous grating as indicated in the plans. End caps shall be as provided by the manufacturer.

Elastomeric polymer sealer shall meet the physical requirements of ASTM D 3406 and be accepted on manufacturer's certification.

The pipe shall be helically corrugated with a continuous welded or lock seam. Pipe ends shall have 2 rolled annular corrugations on each end for jointing.

Bar Riser and Spacer Type: Riser assemblies shall be fabricated from structural steel, in accordance with the dimensions on the plans. The riser assemblies shall be hot dipped galvanized according to ASTM A123. The assemblies shall be welded to the corrugated pipe on each side of the riser at the location of the solid web spacers. The riser shall terminate 1 inch from the ends of each pipe length to allow clearance for single bolt coupling bands. The ends of the riser shall be closed with a suitable welded plate where solid web spacers do not come to the ends of the riser.

The maximum deviation from straight in both the vertical and horizontal plane of the riser assembly shall not exceed 3/4 inch in a 20-foot length.

Continuous Grating Type: The cut-out pipe segments shall provide a 2-inch wide slot of maximum length between the lock seams. The slot shall be left intact 1 inch on each side of the lock seam and this material shall be utilized to fasten the reinforcing bar in place.

A bent epoxy coated reinforcing bar shall cross the slotted opening on 6-inch centers.

The reinforcing bar shall be an ASTM A 615, No. 13, deformed bar epoxy coated with 7 mils of fusion bonded epoxy powder conforming to AASHTO M 284.

Grating shall be furnished unless noted in the contract documents. Grating and all bearing bars, cross bars, and bent connecting bars shall be welding quality, mild carbon steel conforming to ASTM A 569 and to the dimensions shown on the plans.

Tie down bolts shall be J-Type bolts, plated, ASTM A 307 steel supplied with self-locking nuts.

Concrete forms shall be of cellular foam plastic base, fabricated as an integral part of the pipe and reinforcing bar assembly. The form shall be capped with a thick wood or plastic cap resting on top of the foam plastic and reinforcing bar.

The maximum deviation from straight in both the vertical and horizontal plane of the completed assembly shall not exceed 3/4 inch in a 20-foot length. All grating and hardware shall be galvanized in conformance with Article M.06.03. Expansion joint filler shall conform to M.03.

11. Reinforced Concrete Culvert End: The barrel shall conform to the requirements of AASHTO M 170, Class II, except that the three-edge bearing tests will not be required. The flare shall be of the same thickness and materials as the barrel and shall have steel reinforcement equaling or exceeding the amount shown on the table for the pertinent size.

Tongues and grooves shall be compatible with tongues and grooves of pipe meeting AASHTO M 170, Class IV.

Air entrainment shall be added to these units so as to maintain 5 to 8% entrained air.

ALUMINUM

12. Corrugated Aluminum Pipe: This material shall conform to the requirements of AASHTO M 196 Type I or Type IR. Sheet thickness shall conform to the requirements of M.08.01-2.

13. Corrugated Aluminum Pipe for Underdrains and Outlets: This material shall conform to the requirements of AASHTO M 196, Type III or Type IIIR. Sheet thickness shall conform to the requirements of M.08.01-2. Pipe for outlets shall not be perforated.

14. Corrugated Aluminum Pipe Arches: These pipe arches shall conform to the requirements of AASHTO M 196, Type II or Type IIR. Sheet thickness shall conform to the requirements of M.08.01-4.

SEALERS/GASKETS

15. Cold-Applied Bituminous Sealer: This material, for use in sealing of joints in concrete pipes, shall be free of asbestos and shall meet the following requirements:

It shall be of such consistency that it may be spread on the joints with a trowel when

the temperature of the air is between -20° F and 100° F. The bituminous material shall adhere to the concrete pipe so as to make a watertight seal and shall not flow, crack or become brittle when exposed to the atmosphere.

Unless otherwise specified, sampling shall be done in accordance with AASHTO T 40.

The bituminous sealer shall be delivered to the project in suitable containers for handling and shall be sealed or otherwise protected from contamination. The container shall show the brand name, net mass or volume, and the requirements for application.

16. Preformed Plastic Gaskets: This material for use in sealing of joints in concrete pipe shall conform to the requirements of ASTM C 1478.

17. Flexible, Watertight, Rubber-Type Gaskets: This material for use in sealing concrete pipe joints shall conform to the requirements of ASTM C 443.

PLASTIC

18. Corrugated Polyethylene Pipe: Corrugated Polyethylene Pipe, either corrugated interior surface (Type C) or smooth interior surface (Type S) without perforations or with perforations (Type CP or SP), shall conform to AASHTO M 252 or M 294. Type D pipe shall have a smooth interior surface braced circumferentially or spirally with projections or ribs joined to a smooth outer wall. Both surfaces shall be fused to, or be continuous with, the internal supports. Type D shall conform to AASHTO M 294.

19. Geotextiles: The geotextile shall be non-rotting, acid and alkali resistant, and have sufficient strength and permeability for the purpose intended including handling and backfilling operations. Fibers shall be low water absorbent. The fiber network must be dimensionally stable and resistant to delamination. The geotextile shall be free of any chemical treatment or coating that will reduce its permeability. The geotextile shall also be free of any flaws or defects which will alter its physical properties. Torn or punctured geotextiles shall not be used. For each specific use, only geotextiles that are already on the Connecticut Department of Transportation's Qualified Products List for the geotextile type will be used. The Engineer reserves the right to reject any geotextile he deems unsatisfactory for a specific use. The brand name shall be labeled on the geotextile or the geotextile container. Geotextiles that are susceptible to damage from sunlight or heat shall be so identified by suitable warning information on the packaging material.

Geotextiles susceptible to sunlight damage shall not be used in any installations where exposure to light will exceed 30 days, unless specifically authorized in writing by the Engineer.

20. Polyvinyl Chloride Plastic Pipe: The pipe shall conform to the requirements of ASTM D 1785. Couplings and elbows shall conform to the requirements of ASTM D 2466 or D 2467.

21. Polyvinyl Chloride Gravity Pipe: This pipe shall conform to one of the following specifications: ASTM F789, ASTM F 679, or ASTM F 794.

M.08.02—Catch Basins, Manholes, and Drop Inlets: The materials to be used in the construction shall conform to the following:

1. Brick for Catch Basins, Manholes or Drop Inlets: Brick for catch basins, manholes or drop inlets shall conform to the requirements of ASTM C 32, except that the depth shall be 2 1/4 inches, the width 3 5/8 inches, and the length 8 inches, and except that the maximum water-absorption by 5-hour boiling shall not exceed the following limits:

Average of 5 bricks	15%
Individual brick	18%

2. Concrete Building Brick for Catch Basins, Manholes, or Drop Inlets: Concrete building brick for catch basins, manholes, or drop inlets shall conform to the requirements of ASTM C 55, Grade S II.

3. Masonry Concrete Units for Catch Basins, Manholes, or Drop Inlets: Masonry concrete units for catch basins, manholes, or drop inlets shall conform to the requirements of ASTM C 139.

4. Precast Units for Drainage Structures: Precast units for drainage structures may be used except where particular conditions require building or casting structures in place.

Fabrication plants shall have a quality control plan approved by the Division Chief of Materials Testing that is demonstrated to the satisfaction of the Engineer. The facility, the quality of materials, the process of fabrication, and the finished precast units shall be subject to inspection by the Engineer.

Precast manholes shall conform to the requirements of AASHTO M 199 (ASTM C 478).

Circular precast catch basins and drop inlets shall conform to AASHTO M 199 (ASTM C 478) as supplemented below. Rectangular precast catch basins and drop inlets shall conform to ASTM C 913 as supplemented below:

All materials used for concrete shall conform to the requirements of Section M.03.

The pertinent provisions of Article 6.01.03 shall apply except that the concrete shall contain 5.0%-8.0% entrained air. Water-absorption of individual cores taken from precast units shall be not more than 7%.

Reinforcement shall conform to the requirements of Article M.06.01.

Suitable provision shall be made in casting the units for convenient handling of the completed casting, and additional reinforcement steel shall be provided to allow for such handling in the casting yard and during transportation and placement. Each completed unit shall be identified with the name of manufacturer and date of the concrete pour from which it was cast, either by casting this information into an exposed face of the unit or by suitable stencil. For each day's production of precast units, the

fabricator shall mold, cure, and test standard cylinders, or cylinders compacted in a similar manner to the parent precast units, for the purpose of determining the compressive strength of the concrete incorporated into the precast units. Concrete used in molding the cylinders shall be representative of the concrete incorporated into the precast units during the production period. Cylinders shall be molded in accordance with AASHTO T 23, cured by the same method as the units they represent, and tested as prescribed in AASHTO T 22.

The fabricator shall determine the air content of the concrete used in the day's production of precast units by performing tests as prescribed in AASHTO T 152.

The equipment and personnel necessary to perform the required testing shall be furnished by the fabricator and approved by the Engineer. All testing equipment shall be calibrated at least once each 12 months or as directed by the Engineer. The fabricator shall maintain records relative to the production, testing, and shipment of precast units supplied to the Department. Said records shall be available to a representative of the Department upon his request.

The Department may accept precast concrete units on the basis of fabricator's certification. The fabricator shall certify each shipment of precast concrete units on Department Form MAT 314 (PC-1), "Certification of Precast Concrete Products." Two (2) copies of this certification shall be furnished with the shipment to the Engineer at the Project site.

Precast units that are cracked, show evidence of honeycomb, or have over 10% of their surface area patched may be subject to rejection, even though meeting other requirements.

5. Metal for Drainage Structures: Metal for catch basins, drop inlet and manhole frames, extensions, covers, and gratings shall be cast iron, cast steel, structural steel or malleable iron conforming to the requirements of the plans. Covers and gratings shall bear uniformly on their supports.

Extensions shall be designed so that the existing manhole cover or catch basin grate, when set in place, will have substantially the same bearing, fit, and load carrying capacity as in the existing frame. The extension shall be designed to fit into the original frame, resting specifically on the flange and rim area. The extension shall accept the existing cover or grate so that the cover or grate is seated firmly without movement.

Ladder rungs for manholes shall conform to AASHTO M 199 (ASTM C 478).

Cast iron shall conform to the requirements of AASHTO M 105, Class 25 for the frames and Class 30 for grates.

Cast steel shall conform to the requirements of ASTM A 27, Grade optional, and shall be thoroughly annealed.

Structural Steel shall conform to the requirements of ASTM A 36, or A 283, Grade B or better, as to quality and details of fabrication, except that in the chemical composition of the steel, the 2/10 of 1% of copper may be omitted.

Malleable iron shall conform to the requirements of ASTM A 47, Grade 22010.

The materials and method of manufacture for drop inlets shall conform to the requirements as stated on the plans or as ordered.

M.08.03—Aggregates

1. Bedding Material: Material for pipe bedding shall be sand or sandy soil, all of which passes a 3/8-inch sieve and not more than 10% passes a No. 200 sieve.

When ground water is encountered, the Engineer may allow No. 6 stone conforming to Article M.01.01 to be used instead of sand or sandy soil.

2. Aggregates for Underdrains: Materials for filling the trench shall consist of well-graded, clean, non-plastic sands or well-graded, clean, durable broken stone or screened gravel. Unless otherwise noted, the type of material to be used shall be sand.

Sand: This material shall meet the requirements of Subarticle M.03.01-2

Broken Stone or Screened Gravel: This material shall conform to the gradation requirements for Size No. 8 under Article M.01.01.

CONNECTICUT
SUPPLEMENTAL SPECIFICATION
SECTION M.11
MASONRY FACING
CEMENT AND DRY RUBBLE MASONRY
BRICK
MORTAR

M.11.01 – Masonry Facing:

1. **Masonry Facing Stone:**

Delete the third sentence:

"Preferably, the stone shall be from a quarry the product of which is known to be of satisfactory quality."

Delete **"2. : Vacant:"**

M.11.04—Mortar:

Delete the entire article and replace it with the following:

M.11.04—Mortar: Mortar shall be either Pre-blended or Pre-packaged material conforming to:

ASTM C1714 - Standard Specification for Pre-blended Dry Mortar Mix for Unit Masonry;

ASTM C387 - Standard Specification for Packaged, Dry, Combined Materials for Concrete and High Strength Mortar;

or be composed of one part Portland cement and two parts, by volume, of surface dry fine aggregate blended on site.

Hydrated lime, in an amount not to exceed 4 pounds (1.8 kilograms) of lime to each bag of cement, may be added when the material is blended on site at the option of the Engineer. Cement and hydrated lime shall conform to the following requirements:

(a) **Portland cement, Types I, II or IS, and water** shall conform to the requirements of Article M.03.

(b) **Hydrated lime** shall conform to the requirements of ASTM C 6.

When mortar is mixed on the project site, **fine aggregate** shall conform to Grading A or B as indicated in the table below, and to the requirements of Section M.03. For laying stone, precast units, or for shotcrete, fine aggregate shall conform to Grading A. For pointing stone or the precast units and for laying brick or sealing pipe joints, the fine aggregate shall conform to Grading B.

Table of Gradation, Fine Aggregate for Mortar

Square Mesh Sieves	**Grading**	
	A	B
	Percentage Passing by weight (mass)	
Pass 3/8 inch (9.5 millimeters)	100	
Pass #4 (4.75 millimeters)	95-100	
Pass #8 (2.36 millimeters)	80-100	100
Pass #16 (1.18 millimeters)	50-85	
Pass #30 (600 microns)	25-60	
Pass #50 (300 microns)	10-30	10-40
Pass #100 (150 microns)	2-10	0-10

CONNECTICUT
SUPPLEMENTAL SPECIFICATION
SECTION M.13
ROADSIDE DEVELOPMENT

M.13.01—Topsoil:

Delete the entire article and replace it with the following:

" **M.13.01 – Topsoil:** The term topsoil used herein shall mean a soil meeting the soil textural classes established by the USDA Classification System based upon the proportion of sand, silt, and clay size particles after passing a No. 10 (2 millimeter) sieve and subjected to a particle size analysis. The topsoil shall contain 5% to 20% organic matter as determined by loss on ignition of oven-dried samples dried at 221° F (105° C). The pH range of the topsoil shall be 5.5 to 7.0.

The following textural classes shall be acceptable:

Loamy sand, including coarse, loamy fine, and loamy very fine sand, with not more than 80% sand
Sandy loam, including coarse, fine and very fine sandy loam
Loam
Clay loam, with not more than 30% clay
Silt loam, with not more than 60% silt
Sandy clay loam, with not more than 30% clay
All textural classes of topsoil with greater than 80% sand content will be rejected.

The topsoil furnished by the Contractor shall be a natural, workable soil that is screened and free of subsoil, refuse, stumps, roots, brush, weeds, rocks and stones over 1 1/4 inches (30 millimeters) in diameter, and any other foreign matter that would be detrimental to the proper development of plant growth.

The Contractor shall notify the Engineer of the location of the topsoil at least 15 calendar days prior to delivery. The topsoil and its source shall be inspected and approved by the Engineer before the material is delivered to the project. Any material delivered to the project, which does not meet specifications or which has become mixed with undue amounts of subsoil during any operation at the source or during placing and spreading, will be rejected and shall be replaced by the Contractor with acceptable material.

When topsoil is not furnished by the Contractor, it shall be material that is stripped in accordance with Section 2.02 or is furnished by the State, and will be tested as determined by the Engineer.

1. Planting Soil: Soil Material to be used for plant backfill shall be one of the following textural classes:

Loamy sand, with not more than 80% sand
Sandy loam
Loam
Clay loam, with not more than 30% clay
Silt loam, with not more than 60% silt
Sandy clay loam, with not more than 30% clay

Planting soil shall be premixed, consisting of approximately 50 % topsoil, 25 % compost or peat, and 25% native soil. Planting soil shall be loose, friable, and free from refuse, stumps, roots, brush, weeds, rocks and stones 2 inches (50 millimeters) in diameter. In addition, the material shall be free from any material that will prevent proper development and plant growth.

(a) For ericaceous plants and broad-leaved evergreens requiring an acid soil, planting soil shall have a true pH of 4.5 to 5.5. If it has not, it shall be amended by the Contractor at his own expense to the proper pH range by mixing with sulphur.
(b) Planting soil for general planting of nonacid-loving plants shall have a true pH value of 5.6 to 6.5. If it has not, it shall be amended by the Contractor at his own expense to the proper pH range by mixing with dolomitic limestone.

The amount of either sulphur or limestone required to adjust the planting soil to the proper pH range (above) shall be determined by the Engineer based on agronomic tests. The limestone shall conform to the requirements of Article M.13.02. The sulphur shall be commercial or flour sulphur, unadulterated, and shall be delivered in containers with the name of the manufacturer, material, analysis, and net weight (mass) appearing on each container.

The Engineer reserves the right to draw such samples and to perform such tests as he deems necessary to ensure that these specifications are met."

M.13.03 – Fertilizer:

In the last sentence of the first paragraph change "AOAC International." *to* "AOAC."

M.13.04 – Seed Mixture:

Replace Subarticle (a) *with the following:*

"(a) The grass seed mixture shall conform to the following:

Species	Proportion By Weight (Mass) Pounds (kilograms)	Minimum Purity (Percent)	Minimum Germination (Percent)
VELVET BENTGRASS, (AGROSTIS CANINA) CERTIFIED VARIETY: OR EQUAL CERTIFIED VARIETY;	25 (9.1)	96	85
RED FESCUE (FESTUCA RUBRA L. SSP. RUBRA) CERTIFIED VARIETY: OR EQUAL CERTIFIED VARIETY	35 (15.9)	97	80
PARTRIDGE PEA (CHAMAECRISTA FASCICULATA) CERTIFIED VARITEY	10 (4.5)	95	90
INDIAN GRASS (SORGHASTRUM NUTANS) CERTIFIED VARIETY:	15 (5.45)	95	90
CANADA WILDRYE (ELYMUS CANADENSIS) CERTIFIED VARIETY:	5 (2.3)	95	90
KENTUCKY BLUE GRASS (POA PRATENSIS) CERTIFIED VARIETY:	10 (4.5)	95	90

Under no circumstances should annual Ryegrass, Italian Rye, or any other seed be added to the seed mixture."

M.13.06 – Compost:

In the third to last sentence, replace "DEP" *with* "DEEP".

CONNECTICUT
SUPPLEMENTAL SPECIFICATION
SECTION M.16
TRAFFIC CONTROL SIGNALS

M.16.04 – Poles:

1. Steel Poles:

(i) Wire Entrance Fitting:

In the second sentence, delete "required to accept the cables".

M.16.06 – Traffic Signals:

9. Painting:

In the first sentence, replace "MIL" *with* "MILSPEC".

Subsection **Third Coat:**

Replace the first two sentences with the following:

"Dark Green Enamel: Shall be Dark Green exterior baked enamel and shall comply with FS A-A 2962. The color shall be No. 14056, FS No. 595."

and in the third sentence replace "MIL" *with* "MILSPEC".

M.16.08 – Pedestrian Push Button

In the last sentence of the second paragraph, change "Americans With Disabilities Act (ADA)" *to* "ADA".

Subarticle **Painting**
Subsection **Third Coat:**

Delete the entire paragraph and replace it with the following:

"**Third Coat:** Dark Green Enamel, shall be DARK GREEN exterior-baking enamel and shall comply with Federal Specifications A-A 2962. The color shall be No. 14056, Federal Standard No. 595."

M.16.10 – Flasher Cabinet:

1. Cabinet:

In subsection (f), change "Underwriter's Laboratory" *to* "UL".

M.16.15 – Messenger and Span Wire:

Delete the entire article and replace it with the following:

"M.16.15 – Messenger and Span Wire: The materials for this work shall conform to the following requirements:

1. Messenger wire shall be made of double-galvanized 7-strand utilities-grade steel wire cable, not less than 3/16 inch (4.8 millimeters) in diameter, with at least a 2,400-pound (10.7-killinewton) breaking strength.

2. Span wire:

(a) "Span wire" shall be made of double-galvanized 7-strand utilities-grade steel wire cable, not less than 3/8 inch (9.5 millimeters) in diameter, with at least an 11,200-pound (50-kilonewton) breaking strength.

(b) "Span wire (high strength)" shall be made of double-galvanized 7-strand extra-high-strength-grade steel wire cable, not less than 7/16 inch (11.1 millimeters) in diameter, with at least a 20,800-pound (94-kilonewton) breaking strength.

3. All hardware accessories shown on the plans to be used in span wire or messenger mounting shall be made of high-strength, double-galvanized, first-quality materials."

CONNECTICUT
SUPPLEMENTAL SPECIFICATION
SECTION M.17
ELASTOMERIC MATERIALS

M.17.01 – Elastomeric Bearing Pads:

2. Laminae:

In the last sentence of Subsection (a), replace “AAA 6061-T6” *with* “AA 6061-T6”.

4. Adhesive for Bonding:

In the 2nd paragraph of Subsection (b), replace “MS MIL” *with* “MILSPEC”.

CONNECTICUT
SUPPLEMENTAL SPECIFICATION
SECTION M.18
SIGNING

In the list of Articles, change "**M.18.09—Reflective Sheeting**" *to* "**M18.09—Retroreflective Sheeting**"

M.18.07—Delineators:

1. Reflectors:

In the first sentence of the first paragraph, change "reflective" *to* "retroreflective."

In the only sentence of the second paragraph, change "reflective" *to* "retroreflective."

M.18.09—Reflective Sheeting:

Delete the entire article and replace with the following:

"**M.18.09—Retroreflective Sheeting:** Retroreflective sheeting materials shall appear on the Department's Qualified Product List for the application intended and shall be in accordance with ASTM D4956."

M.18.10—Demountable Copy:

2. Type III Reflective Sheeting

*Change the title from "***Type III Reflective Sheeting***" to "***Type IV Retroreflective Sheeting***."*

In the first sentence of the first paragraph, change "reflective" *to* "retroreflective."

In the second sentence of the first paragraph, change "reflective" *to* "retroreflective" *and change "*Section M.18.09.01*" to "*Article M.18.09*."*

***3.* Non-Reflective Plastic Sheeting:**

H. <u>Solvent and Chemical Resistance:</u>

*In the chart under this subsection, replace "*MIL*" with "*MILSPEC*."*

M.18.15—Sign-Mounting Bolts:

Delete the entire article and replace with the following:

"**M.18.15—Sign-Mounting Bolts:** Bolts used for sign-mounting shall be stainless steel and meet the requirements of ASTM F593, Group 1 or 2 (Alloy Types 304 or 316). Locking nuts shall be stainless steel and shall meet the requirements of ASTM F594, Group 1 or 2 (Alloy Types 304 or 316). Washers shall also be stainless steel and shall meet the requirements of ASTM A240 (Alloy Types 304 or 316)."

Construction Contracts - Required Contract Provisions
(State Funded Only Contracts)

Index

1. Title VI of the Civil Rights Act of 1964 / Nondiscrimination Requirements

2. Contractor Work Force Utilization / Specific Equal Employment Opportunity

3. Contract Wage Rates

4. Americans with Disabilities Act of 1990, as Amended

5. Connecticut Statutory Labor Requirements

    a. Construction, Alteration or Repair of Public Works Projects; Wage Rates
    b. Debarment List - Limitation on Awarding Contracts
    c. Construction Safety and Health Course
    d. Awarding of Contracts to Occupational Safety and Health Law Violators Prohibited
    e. Residents Preference in Work on Other Public Facilities (Not Applicable to Federal Aid Contracts)

6. Tax Liability - Contractor's Exempt Purchase Certificate (CERT – 141)

7. Executive Orders (State of CT)

8. Non Discrimination Requirement (pursuant to section 4a-60 and 4a-60a of the Connecticut General Statutes, as revised)

9. Whistleblower Provision

10. Connecticut Freedom of Information Act

    a. Disclosure of Records
    b. Confidential Information

11. Service of Process

12. Substitution of Securities for Retainages on State Contracts and Subcontracts

13. Health Insurance Portability and Accountability Act of 1996 (HIPAA)

14. Forum and Choice of Law

15. Summary of State Ethics Laws

16. Audit and Inspection of Plants, Places of Business and Records

17. Campaign Contribution Restriction

18. Tangible Personal Property

19. Bid Rigging and/or Fraud – Notice to Contractor

20. Consulting Agreement Affidavit

Index of Exhibits

EXHIBIT A – Title VI Contractor Assurances (page 13)
EXHIBIT B – Contractor Work Force Utilization / Equal Employment Opportunity (page 14)
EXHIBIT C – Health Insurance Portability and Accountability Act of 1996 (HIPAA) (page 17)
EXHIBIT D - Campaign Contribution Restriction (page 25)
EXHIBIT E - State Wage Rates (Attached at the end)

1. Title VI of the Civil Rights Act of 1964 / Nondiscrimination Requirements

The Contractor shall comply with Title VI of the Civil Rights Act of 1964 as amended (42 U.S.C. 2000 et seq.), all requirements imposed by the regulations of the United States Department of Transportation (49 CFR Part 21) issued in implementation thereof, and the Title VI Contractor Assurances attached hereto at Exhibit A, all of which are hereby made a part of this Contract.

2. Contractor Work Force Utilization / Equal Employment Opportunity

(a) The Contractor shall comply with the Contractor Work Force Utilization / Equal Employment Opportunity requirements attached at Exhibit B and hereby made part of this Contract, whenever a contractor or subcontractor at any tier performs construction work in excess of $10,000. These goals shall be included in each contract and subcontract. Goal achievement is calculated for each trade using the hours worked under each trade.

(b) Companies with contracts, agreements or purchase orders valued at $10,000 or more will develop and implement an Affirmative Action Plan utilizing the ConnDOT Affirmative Action Plan Guideline. This Plan shall be designed to further the provision of equal employment opportunity to all persons without regard to their race, color, religion, sex or national origin, and to promote the full realization of equal employment opportunity through a positive continuation program. Plans shall be updated as required by ConnDOT.

3. Contract Wage Rates

The Contractor shall comply with:

The State wage rate requirements indicated in Exhibit E hereof are hereby made part of this Contract.

Prevailing Wages for Work on State Highways; Annual Adjustments. With respect to contracts for work on state highways and bridges on state highways, the Contractor shall comply with the provisions of Section 31-54 and 31-55a of the Connecticut General Statutes, as revised.

As required by section 1.05.12 (Payrolls) of the State of Connecticut, Department of Transportation's Standard Specification for Roads, Bridges and Incidental Construction (FORM 816), as may be revised, every Contractor or subcontractor performing project work on a federal aid project is required to post the relevant prevailing wage rates as determined by the United States Secretary of Labor. The wage rate determinations shall be posted in prominent and easily accessible places at the work site.

4. Americans with Disabilities Act of 1990, as Amended

This provision applies to those Contractors who are or will be responsible for compliance with the terms of the Americans with Disabilities Act of 1990, as amended (42 U.S.C. 12101 et seq.), (Act), during the term of the Contract. The Contractor represents that it is familiar with the terms of this Act and that it is in compliance with the Act. Failure of the Contractor to satisfy this standard as the same applies to performance under this Contract, either now or during the term of the Contract as it may be amended, will render the Contract voidable at the option of the State upon notice to the contractor. The Contractor warrants that it will hold the State harmless and indemnify the State from any liability which may be imposed upon the State as a result of any failure of the Contractor to be in compliance with this Act, as the same applies to performance under this Contract.

5. Connecticut Statutory Labor Requirements

(a) Construction, Alteration or Repair of Public Works Projects; Wage Rates. The Contractor shall comply with Section 31-53 of the Connecticut General Statutes, as revised. The wages paid on an hourly basis to any person performing the work of any mechanic, laborer or worker on the work herein contracted to be done and the amount of payment or contribution paid or payable on behalf of each such person to any employee welfare fund, as defined in subsection (i) of section 31-53 of the Connecticut General Statutes, shall be at a rate equal to the rate customary or prevailing for the same work in the same trade or occupation in the town in which such public works project is being constructed. Any contractor who is not obligated by agreement to make payment or contribution on behalf of such persons to any such employee welfare fund shall pay to each mechanic, laborer or worker as part of such person's wages the amount of payment or contribution for such person's classification on each pay day.

(b) Debarment List. Limitation on Awarding Contracts. The Contractor shall comply with Section 3l-53a of the Connecticut General Statutes, as revised.

(c) Construction Safety and Health Course. The Contractor shall comply with section 31-53b of the Connecticut General Statutes, as revised. The contractor shall furnish proof to the Labor Commissioner with the weekly certified payroll form for the first week each employee begins work on such project that any person performing the work of a mechanic, laborer or worker pursuant to the classifications of labor under section 31-53 of the Connecticut General Statutes, as revised, on such public works project, pursuant to such contract, has completed a course of at least ten hours in duration in construction safety and health approved by the federal Occupational Safety and Health Administration or, has completed a new miner training program approved by the Federal Mine Safety and Health Administration in accordance with 30 CFR 48 or, in the case of telecommunications employees, has completed at least ten hours of training in accordance with 29 CFR 1910.268.

Any employee required to complete a construction safety and health course as required that has not completed the course, shall have a maximum of fourteen (14) days to complete the course. If the employee has not been brought into compliance, they shall be removed from the project until such time as they have completed the required training.

Any costs associated with this notice shall be included in the general cost of the contract. In addition, there shall be no time granted to the contractor for compliance with this notice. The contractor's compliance with this notice and any associated regulations shall not be grounds for claims as outlined in Section 1.11 – "Claims".

(d) Awarding of Contracts to Occupational Safety and Health Law Violators Prohibited. The Contract is subject to Section 31-57b of the Connecticut General Statutes, as revised.

(e) Residents Preference in Work on Other Public Facilities. NOT APPLICABLE TO FEDERAL AID CONTRACTS. Pursuant to Section 31-52a of the Connecticut General Statutes, as revised, in the employment of mechanics, laborers or workmen to perform the work specified herein, preference shall be given to residents of the state who are, and continuously for at least six months prior to the date hereof have been, residents of this state, and if no such person is available, then to residents of other states

6. Tax Liability - Contractor's Exempt Purchase Certificate (CERT – 141)

The Contractor shall comply with Chapter 219 of the Connecticut General Statutes pertaining to tangible personal property or services rendered that is/are subject to sales tax. The Contractor is responsible for determining its tax liability. If the Contractor purchases materials or supplies pursuant to the Connecticut Department of Revenue Services' "Contractor's Exempt Purchase Certificate (CERT-141)," as may be revised, the Contractor acknowledges and agrees that title to such materials and supplies installed or placed in the project will vest in the State simultaneously with passage of title from the retailers or vendors thereof, and the Contractor will have no property rights in the materials and supplies purchased.

Forms and instructions are available anytime by:

Internet: Visit the DRS website at www.ct.gov/DRS to download and print Connecticut tax forms; or Telephone: Call 1-800-382-9463 (Connecticut calls outside the Greater Hartford calling area only) and select Option 2 or call 860-297-4753 (from anywhere).

7. Executive Orders

This contract is subject to the provisions of Executive Order No. Three of Governor Thomas J. Meskill, promulgated June 16, 1971, concerning labor employment practices, Executive Order No. Seventeen of Governor Thomas J. Meskill, promulgated February 15, 1973, concerning the listing of employment openings and Executive Order No. Sixteen of Governor John G. Rowland promulgated August 4, 1999, concerning violence in the workplace, all of which are incorporated into and are made a part of the contract as if they had been fully set forth in it. The contract may also be subject to Executive Order No. 14 of Governor M. Jodi Rell, promulgated April 17, 2006, concerning procurement of cleaning products and services and to Executive Order No. 49 of Governor Dannel P. Malloy, promulgated May 22, 2015, mandating disclosure of certain gifts to public employees and contributions to certain candidates for office. If Executive Order No. 14 and/or Executive Order No. 49 are applicable, they are deemed to be incorporated into and are made a part of the contract as if they had been fully set forth in it. At the Contractor's request, the Department shall provide a copy of these orders to the Contractor.

8. Non Discrimination Requirement (pursuant to section 4a-60 and 4a-60a of the Connecticut General Statutes, as revised): References to "minority business enterprises" in this Section are not applicable to Federal-aid projects/contracts. Federal-aid projects/contracts are instead subject to the Federal Disadvantaged Business Enterprise Program.

(a) For purposes of this Section, the following terms are defined as follows:

i. "Commission" means the Commission on Human Rights and Opportunities;
ii. "Contract" and "contract" include any extension or modification of the Contract or contract;
iii. "Contractor" and "contractor" include any successors or assigns of the Contractor or contractor;
iv. "gender identity or expression" means a person's gender-related identity, appearance or behavior, whether or not that gender-related identity, appearance or behavior is different from that traditionally associated with the person's physiology or assigned sex at birth, which gender-related identity can be shown by providing evidence including, but not limited to, medical history, care or treatment of the gender-related identity, consistent and uniform assertion of the gender-related identity or any other evidence that the gender-related identity is sincerely held, part of a person's core identity or not being asserted for an improper purpose.

v. “good faith" means that degree of diligence which a reasonable person would exercise in the performance of legal duties and obligations;

vi. "good faith efforts" shall include, but not be limited to, those reasonable initial efforts necessary to comply with statutory or regulatory requirements and additional or substituted efforts when it is determined that such initial efforts will not be sufficient to comply with such requirements;

vii. "marital status" means being single, married as recognized by the State of Connecticut, widowed, separated or divorced;

viii. "mental disability" means one or more mental disorders, as defined in the most recent edition of the American Psychiatric Association's "Diagnostic and Statistical Manual of Mental Disorders", or a record of or regarding a person as having one or more such disorders;

ix. "minority business enterprise" means any small contractor or supplier of materials fifty-one percent or more of the capital stock, if any, or assets of which is owned by a person or persons: (1) who are active in the daily affairs of the enterprise, (2) who have the power to direct the management and policies of the enterprise, and (3) who are members of a minority, as such term is defined in subsection (a) of Connecticut General Statutes § 32-9n; and

x. “public works contract" means any agreement between any individual, firm or corporation and the State or any political subdivision of the State other than a municipality for construction, rehabilitation, conversion, extension, demolition or repair of a public building, highway or other changes or improvements in real property, or which is financed in whole or in part by the State, including, but not limited to, matching expenditures, grants, loans, insurance or guarantees.

For purposes of this Section, the terms "Contract" and “contract” do not include a contract where each contractor is (1) a political subdivision of the State, including, but not limited to, a municipality, (2) a quasi-public agency, as defined in Conn. Gen. Stat. Section 1-120, (3) any other state, including but not limited to any federally recognized Indian tribal governments, as defined in Conn. Gen. Stat. Section 1-267, (4) the federal government, (5) a foreign government, or (6) an agency of a subdivision, agency, state or government described in the immediately preceding enumerated items (1), (2), (3), (4) or (5).

(b) (1) The Contractor agrees and warrants that in the performance of the Contract such Contractor will not discriminate or permit discrimination against any person or group of persons on the grounds of race, color, religious creed, age, marital status, national origin, ancestry, sex, gender identity or expression, intellectual disability, mental disability or physical disability, including, but not limited to, blindness, unless it is shown by such Contractor that such disability prevents performance of the work involved, in any manner prohibited by the laws of the United States or of the State of Connecticut; and the Contractor further agrees to take affirmative action to insure that applicants with job-related qualifications are employed and that employees are treated when employed without regard to their race, color, religious creed, age, marital status, national origin, ancestry, sex, gender identity or expression, intellectual disability, mental disability or physical disability, including, but not limited to, blindness, unless it is shown by the Contractor that such disability prevents performance of the work involved; (2) the Contractor agrees, in all solicitations or advertisements for employees placed by or on behalf of the Contractor, to state that it is an "affirmative action-equal opportunity employer" in accordance with regulations adopted by the Commission; (3) the Contractor agrees to provide each labor union or representative of workers with which the Contractor has a collective bargaining Agreement or other contract or understanding and each vendor with which the Contractor has a contract or

understanding, a notice to be provided by the Commission, advising the labor union or workers' representative of the Contractor's commitments under this section and to post copies of the notice in conspicuous places available to employees and applicants for employment; (4) the Contractor agrees to comply with each provision of this Section and Connecticut General Statutes §§ 46a-68e and 46a-68f and with each regulation or relevant order issued by said Commission pursuant to Connecticut General Statutes §§ 46a-56, 46a-68e and 46a-68f; and (5) the Contractor agrees to provide the Commission on Human Rights and Opportunities with such information requested by the Commission, and permit access to pertinent books, records and accounts, concerning the employment practices and procedures of the Contractor as relate to the provisions of this Section and Connecticut General Statutes § 46a-56. If the contract is a public works contract, the Contractor agrees and warrants that he will make good faith efforts to employ minority business enterprises as subcontractors and suppliers of materials on such public works projects.

(c) Determination of the Contractor's good faith efforts shall include, but shall not be limited to, the following factors: The Contractor's employment and subcontracting policies, patterns and practices; affirmative advertising, recruitment and training; technical assistance activities and such other reasonable activities or efforts as the Commission may prescribe that are designed to ensure the participation of minority business enterprises in public works projects.

(d) The Contractor shall develop and maintain adequate documentation, in a manner prescribed by the Commission, of its good faith efforts.

(e) The Contractor shall include the provisions of subsection (b) of this Section in every subcontract or purchase order entered into in order to fulfill any obligation of a contract with the State and such provisions shall be binding on a subcontractor, vendor or manufacturer unless exempted by regulations or orders of the Commission. The Contractor shall take such action with respect to any such subcontract or purchase order as the Commission may direct as a means of enforcing such provisions including sanctions for noncompliance in accordance with Connecticut General Statutes §46a-56; provided if such Contractor becomes involved in, or is threatened with, litigation with a subcontractor or vendor as a result of such direction by the Commission, the Contractor may request the State of Connecticut to enter into any such litigation or negotiation prior thereto to protect the interests of the State and the State may so enter.

(f) The Contractor agrees to comply with the regulations referred to in this Section as they exist on the date of this Contract and as they may be adopted or amended from time to time during the term of this Contract and any amendments thereto.

(g) (1) The Contractor agrees and warrants that in the performance of the Contract such Contractor will not discriminate or permit discrimination against any person or group of persons on the grounds of sexual orientation, in any manner prohibited by the laws of the United States or the State of Connecticut, and that employees are treated when employed without regard to their sexual orientation; (2) the Contractor agrees to provide each labor union or representative of workers with which such Contractor has a collective bargaining Agreement or other contract or understanding and each vendor with which such Contractor has a contract or understanding, a notice to be provided by the Commission on Human Rights and Opportunities advising the labor union or workers' representative of the Contractor's commitments under this section, and to post copies of the notice in conspicuous places available to employees and applicants for employment; (3) the Contractor agrees to comply with each provision of this section and with each regulation or relevant order issued by said Commission pursuant to Connecticut General Statutes § 46a-56;

and (4) the Contractor agrees to provide the Commission on Human Rights and Opportunities with such information requested by the Commission, and permit access to pertinent books, records and accounts, concerning the employment practices and procedures of the Contractor which relate to the provisions of this Section and Connecticut General Statutes § 46a-56.

(h) The Contractor shall include the provisions of the foregoing paragraph in every subcontract or purchase order entered into in order to fulfill any obligation of a contract with the State and such provisions shall be binding on a subcontractor, vendor or manufacturer unless exempted by regulations or orders of the Commission. The Contractor shall take such action with respect to any such subcontract or purchase order as the Commission may direct as a means of enforcing such provisions including sanctions for noncompliance in accordance with Connecticut General Statutes § 46a-56; provided, if such Contractor becomes involved in, or is threatened with, litigation with a subcontractor or vendor as a result of such direction by the Commission, the Contractor may request the State of Connecticut to enter into any such litigation or negotiation prior thereto to protect the interests of the State and the State may so enter."

The Nondiscrimination Certifications can be found at the Office of Policy and Management website.

http://www.ct.gov/opm/cwp/view.asp?a=2982&Q=390928

9. Whistleblower Provision

The following clause is applicable if the Contract has a value of Five Million Dollars ($5,000,000) or more.

Whistleblowing. This Contract may be subject to the provisions of Section 4-61dd of the Connecticut General Statutes. In accordance with this statute, if an officer, employee or appointing authority of the Contractor takes or threatens to take any personnel action against any employee of the Contractor in retaliation for such employee's disclosure of information to any employee of the contracting state or quasi-public agency or the Auditors of Public Accounts or the Attorney General under the provisions of subsection (a) of such statute, the Contractor shall be liable for a civil penalty of not more than five thousand dollars for each offense, up to a maximum of twenty per cent of the value of this Contract. Each violation shall be a separate and distinct offense and in the case of a continuing violation, each calendar day's continuance of the violation shall be deemed to be a separate and distinct offense. The State may request that the Attorney General bring a civil action in the Superior Court for the Judicial District of Hartford to seek imposition and recovery of such civil penalty. In accordance with subsection (f) of such statute, each large state contractor, as defined in the statute, shall post a notice of the provisions of the statute relating to large state contractors in a conspicuous place which is readily available for viewing by the employees of the Contractor.

10. Connecticut Freedom of Information Act

(a) Disclosure of Records. This Contract may be subject to the provisions of section 1-218 of the Connecticut General Statutes. In accordance with this statute, each contract in excess of two million five hundred thousand dollars between a public agency and a person for the performance of a governmental function shall (a) provide that the public agency is entitled to receive a copy of records and files related to the performance of the governmental function, and (b) indicate that such records and files are subject to FOIA and may be disclosed by the public agency pursuant to FOIA. No request to inspect or copy such records or files shall be valid unless the request is made to the public agency in accordance with FOIA. Any complaint by a person who is denied the right to inspect or copy such records or files shall be brought to the Freedom of Information Commission in accordance with the provisions of sections 1-205 and 1-206 of the Connecticut General Statutes.

(b) Confidential Information. The State will afford due regard to the Contractor's request for the protection of proprietary or confidential information which the State receives from the Contractor. However, all materials associated with the Contract are subject to the terms of the FOIA and all corresponding rules, regulations and interpretations. In making such a request, the Contractor may not merely state generally that the materials are proprietary or confidential in nature and not, therefore, subject to release to third parties. Those particular sentences, paragraphs, pages or sections that the Contractor believes are exempt from disclosure under the FOIA must be specifically identified as such. Convincing explanation and rationale sufficient to justify each exemption consistent with the FOIA must accompany the request. The rationale and explanation must be stated in terms of the prospective harm to the competitive position of the Contractor that would result if the identified material were to be released and the reasons why the materials are legally exempt from release pursuant to the FOIA. To the extent that any other provision or part of the Contract conflicts or is in any way inconsistent with this section, this section controls and shall apply and the conflicting provision or part shall not be given effect. If the Contractor indicates that certain documentation is submitted in confidence, by specifically and clearly marking the documentation as "CONFIDENTIAL," DOT will first review the Contractor's claim for consistency with the FOIA (that is, review that the documentation is actually a trade secret or commercial or financial information and not required by statute), and if determined to be consistent, will endeavor to keep such information confidential to the extent permitted by law. See, *e.g.*, Conn. Gen. Stat. §1-210(b)(5)(A-B). The State, however, has no obligation to initiate, prosecute or defend any legal proceeding or to seek a protective order or other similar relief to prevent disclosure of any information that is sought pursuant to a FOIA request. Should the State withhold such documentation from a Freedom of Information requester and a complaint be brought to the Freedom of Information Commission, the Contractor shall have the burden of cooperating with DOT in defense of that action and in terms of establishing the availability of any FOIA exemption in any proceeding where it is an issue. In no event shall the State have any liability for the disclosure of any documents or information in its possession which the State believes are required to be disclosed pursuant to the FOIA or other law.

11. Service of Process

The Contractor, if not a resident of the State of Connecticut, or, in the case of a partnership, the partners, if not residents, hereby appoints the Secretary of State of the State of Connecticut, and his successors in office, as agent for service of process for any action arising out of or as a result of this Contract; such appointment to be in effect throughout the life of this Contract and six (6) years thereafter.

12. Substitution of Securities for Retainages on State Contracts and Subcontracts

This Contract is subject to the provisions of Section 3-ll2a of the General Statutes of the State of Connecticut, as revised.

13. Health Insurance Portability and Accountability Act of 1996 (HIPAA)

The Contractor shall comply, if applicable, with the Health Insurance Portability and Accountability Act of 1996 and, pursuant thereto, the provisions attached at Exhibit C, and hereby made part of this Contract.

14. Forum and Choice of Law

Forum and Choice of Law. The parties deem the Contract to have been made in the City of Hartford, State of Connecticut. Both parties agree that it is fair and reasonable for the validity and construction of the Contract to be, and it shall be, governed by the laws and court decisions of the State of Connecticut, without giving effect to its principles of conflicts of laws. To the extent that any immunities provided by Federal law or the laws of the State of Connecticut do not bar an action against the State, and to the extent that these courts are courts of competent jurisdiction, for the purpose of venue, the complaint shall be made returnable to the Judicial District of Hartford only or shall be brought in the United States District Court for the District of Connecticut only, and shall not be transferred to any other court, provided, however, that nothing here constitutes a waiver or compromise of the sovereign immunity of the State of Connecticut. The Contractor waives any objection which it may now have or will have to the laying of venue of any Claims in any forum and further irrevocably submits to such jurisdiction in any suit, action or proceeding.

15. Summary of State Ethics Laws

Pursuant to the requirements of section 1-101qq of the Connecticut General Statutes, the summary of State ethics laws developed by the State Ethics Commission pursuant to section 1-81b of the Connecticut General Statutes is incorporated by reference into and made a part of the Contract as if the summary had been fully set forth in the Contract.

16. Audit and Inspection of Plants, Places of Business and Records

(a) The State and its agents, including, but not limited to, the Connecticut Auditors of Public Accounts, Attorney General and State's Attorney and their respective agents, may, at reasonable hours, inspect and examine all of the parts of the Contractor's and Contractor Parties' plants and places of business which, in any way, are related to, or involved in, the performance of this Contract. For the purposes of this Section, "Contractor Parties" means the Contractor's members, directors, officers, shareholders, partners, managers, principal officers, representatives, agents, servants, consultants, employees or any one of them or any other person or entity with whom the Contractor is in privity of oral or written contract and the Contractor intends for such other person or entity to Perform under the Contract in any capacity.

(b) The Contractor shall maintain, and shall require each of the Contractor Parties to maintain, accurate and complete Records. The Contractor shall make all of its and the Contractor Parties' Records available at all reasonable hours for audit and inspection by the State and its agents.

(c) The State shall make all requests for any audit or inspection in writing and shall provide the Contractor with at least twenty-four (24) hours' notice prior to the requested audit and inspection date. If the State suspects fraud or other abuse, or in the event of an emergency, the State is not obligated to provide any prior notice.

(d) The Contractor shall keep and preserve or cause to be kept and preserved all of its and Contractor Parties' Records until three (3) years after the latter of (i) final payment under this Agreement, or (ii) the expiration or earlier termination of this Agreement, as the same may be modified for any reason. The State may request an audit or inspection at any time during this period. If any Claim or audit is started before the expiration of this period, the Contractor shall retain or cause to be retained all Records until all Claims or audit findings have been resolved.

(e) The Contractor shall cooperate fully with the State and its agents in connection with an audit or inspection. Following any audit or inspection, the State may conduct and the Contractor shall cooperate with an exit conference.

(f) The Contractor shall incorporate this entire Section verbatim into any contract or other agreement that it enters into with any Contractor Party.

17.Campaign Contribution Restriction

For all State contracts, defined in Conn. Gen. Stat. §9-612(f)(1) as having a value in a calendar year of $50,000 or more, or a combination or series of such agreements or contracts having a value of $100,000 or more, the authorized signatory to this contract expressly acknowledges receipt of the State Elections Enforcement Commission's notice advising state contractors of state campaign contribution and solicitation prohibitions, and will inform its principals of the contents of the notice, as set forth in "Notice to Executive Branch State Contractors and Prospective State Contractors of Campaign Contribution and Solicitation Limitations," a copy of which is attached hereto and hereby made a part of this contract, attached as Exhibit D.

18. Tangible Personal Property

(a) The Contractor on its behalf and on behalf of its Affiliates, as defined below, shall comply with the provisions of Conn. Gen. Stat. §12-411b, as follows:

(1) For the term of the Contract, the Contractor and its Affiliates shall collect and remit to the State of Connecticut, Department of Revenue Services, any Connecticut use tax due under the provisions of Chapter 219 of the Connecticut General Statutes for items of tangible personal property sold by the Contractor or by any of its Affiliates in the same manner as if the Contractor and such Affiliates were engaged in the business of selling tangible personal property for use in Connecticut and had sufficient nexus under the provisions of Chapter 219 to be required to collect Connecticut use tax;
(2) A customer's payment of a use tax to the Contractor or its Affiliates relieves the customer of liability for the use tax;
(3) The Contractor and its Affiliates shall remit all use taxes they collect from customers on or before the due date specified in the Contract, which may not be later than the last day of the month next succeeding the end of a calendar quarter or other tax collection period during which the tax was collected;
(4) The Contractor and its Affiliates are not liable for use tax billed by them but not paid to them by a customer; and
(5) Any Contractor or Affiliate who fails to remit use taxes collected on behalf of its customers by the due date specified in the Contract shall be subject to the interest and penalties provided for persons required to collect sales tax under chapter 219 of the general statutes.

(b) For purposes of this section of the Contract, the word "Affiliate" means any person, as defined in section 12-1 of the general statutes, that controls, is controlled by, or is under common control with another person. A person controls another person if the person owns, directly or indirectly, more than ten per cent of the voting securities of the other person. The word "voting security" means a security that confers upon the holder the right to vote for the election of members of the board of directors or similar governing body of the business, or that is convertible into, or entitles the holder to receive, upon its exercise, a security that confers such a right to vote. "Voting security" includes a general partnership interest.

(c) The Contractor represents and warrants that each of its Affiliates has vested in the Contractor plenary authority to so bind the Affiliates in any agreement with the State of Connecticut. The Contractor on its own behalf and on behalf of its Affiliates shall also provide, no later than 30 days after receiving a request by the State's contracting authority, such information as the State may require to ensure, in the State's sole determination, compliance with the provisions of Chapter 219 of the Connecticut General Statutes, including, but not limited to, §12-411b.

19. Bid Rigging and/or Fraud – Notice to Contractor

The Connecticut Department of Transportation is cooperating with the U.S. Department of Transportation and the Justice Department in their investigation into highway construction contract bid rigging and/or fraud.

A toll-free "HOT LINE" telephone number 800-424-9071 has been established to receive information from contractors, subcontractors, manufacturers, suppliers or anyone with knowledge of bid rigging and/or fraud, either past or current. The "HOT LINE" telephone number will be available during normal working hours (8:00 am – 5:00 pm EST). Information will be treated confidentially and anonymity respected.

20. Consulting Agreement Affidavit

The Contractor shall comply with Connecticut General Statutes Section 4a-81(a) and 4a-81(b), as revised. Pursuant to Public Act 11-229, after the initial submission of the form, if there is a change in the information contained in the form, a contractor shall submit the updated form, as applicable, either (i) not later than thirty (30) days after the effective date of such change or (ii) prior to execution of any new contract, whichever is earlier.

The Affidavit/Form may be submitted in written format or electronic format through the Department of Administrative Services (DAS) website.

EXHIBIT A

TITLE VI CONTRACTOR ASSURANCES

During the performance of this Contract, the contractor, for itself, its assignees and successors in interest (hereinafter referred to as the "Contractor") agrees as follows:

1. **Compliance with Regulations:** The Contractor shall comply with the regulations relative to nondiscrimination in federally assisted programs of the United States Department of Transportation (hereinafter, "USDOT"), Title 49, Code of Federal Regulations, Part 21, as they may be amended from time to time (hereinafter referred to as the "Regulations"), which are herein incorporated by reference and made a part of this contract.

2. **Nondiscrimination:** The Contractor, with regard to the work performed by it during the Contract, shall not discriminate on the grounds of race, color, national origin, sex, age, or disability in the selection and retention of subcontractors, including procurements of materials and leases of equipment. The Contractor shall not participate either directly or indirectly in the discrimination prohibited by Subsection 5 of the Regulations, including employment practices when the Contract covers a program set forth in Appendix B of the Regulations.

3. **Solicitations for Subcontracts, Including Procurements of Materials and Equipment:**
In all solicitations either by competitive bidding or negotiation made by the Contractor for work to be performed under a subcontract, including procurements of materials or leases of equipment, each potential subcontractor or supplier shall be notified by the Contractor of the Contractor's obligations under this contract and the Regulations relative to nondiscrimination on the grounds of race, color, national origin, sex, age, or disability.

4. **Information and Reports:** The Contractor shall provide all information and reports required by the Regulations or directives issued pursuant thereto and shall permit access to its books, records, accounts, other sources of information, and its facilities as may be determined by the Connecticut Department of Transportation (ConnDOT) or the Funding Agency (FHWA, FTA and FAA) to be pertinent to ascertain compliance with such Regulations, orders, and instructions. Where any information required of a Contractor is in the exclusive possession of another who fails or refuses to furnish this information, the Contractor shall so certify to ConnDOT or the Funding Agency, as appropriate, and shall set forth what efforts it has made to obtain the information.

5. **Sanctions for Noncompliance:** In the event of the Contractor's noncompliance with the nondiscrimination provisions of this Contract, the ConnDOT shall impose such sanctions as it or the Funding Agency may determine to be appropriate, including, but not limited to:

A. Withholding contract payments until the Contractor is in-compliance; and/or
B. Cancellation, termination, or suspension of the Contract, in whole or in part.

6. **Incorporation of Provisions:** The Contractor shall include the provisions of paragraphs 1 through 5 in every subcontract, including procurements of materials and leases of equipment, unless exempt by the Regulations or directives issued pursuant thereto. The Contractor shall take such action with respect to any subcontract or procurement as the ConnDOT or the Funding Agency may -direct as a means of enforcing such provisions including sanctions for noncompliance. Provided, however, that in the event a Contractor becomes involved in, or is threatened with, litigation with a subcontractor or supplier as a result of such direction, the Contractor may request the ConnDOT to enter into such litigation to protect the interests of the Funding Agency, and, in addition, the Contractor may request the United States to enter into such litigation to protect the interests of the United States

EXHIBIT B

CONTRACTOR WORKFORCE UTILIZATION / EQUAL EMPLOYMENT OPPORTUNITY

1. **Project Workforce Utilization Goals:**
   These goals are applicable to all the Contractor's construction work (whether or not it is Federal or Federally assisted or funded) performed in the covered area. If the contractor performs construction work in a geographical area located outside of the covered area, it shall apply the goals established for the geographical area where the work is actually performed.

   Whenever the Contractor, or any Subcontractor at any tier, subcontracts a portion of the work involving any construction trade, it shall physically include in each subcontract in excess of $10,000 the provisions of these specifications which contain the applicable goals for minority and female participation.

   The goals for minority and female utilization are expressed in percentage terms for the contractor's aggregate work-force in each trade on all construction work in the covered area, are referenced in the Appendix A below.

STATE FUNDED PROJECTS (only)
APPENDIX A
(Labor Market Goals)

LABOR MARKET AREA GOAL				***Minority***
Female				
Bridgeport				**14%**
6.9%				
Ansonia	Beacon Falls	Bridgeport	Derby	
Easton	Fairfield	Milford	Monroe	
Oxford	Seymour	Shelton	Stratford	
Trumbull				
Danbury				**4%**
6.9%				
Bethel	Bridgewater	Brookfield	Danbury	
Kent	New Fairfield	New Milford	Newtown	
Redding	Ridgefield	Roxbury	Sherman	
Washington				
Danielson				**2%**
6.9%				
Brooklyn	Eastford	Hampton	Killingly	
Pomfret	Putnam	Scotland	Sterling	
Thompson	Voluntown	Union	Woodstock	
Hartford				**15%**
6.9%				

Andover	Ashford	Avon	Barkhamsted
Belin	Bloomfield	Bolton	Bristol
Burlington	Canton	Chaplin	Colchester
Columbia	Coventry	Cromwell	Durham
East Granby	East Haddam	East Hampton	East Hartford
East Windsor	Ellington	Enfield	Farmington
Glastonbury	Granby	Haddam	Hartford
Harwinton	Hebron	Lebanon	Manchester
Mansfield	Marlborough	Middlefield	Middletown
Newington	Plainville	Plymouth	Portland
Rocky Hill	Simsbury	Somers	South Windsor
Southington	Stafford	Suffield	Tolland
Vernon	West Hartford	Wethersfield	Willington
Winchester	Windham	Windsor	Windsor Locks

Lower River **2%**
6.9%

Chester	Deep River	Essex	Old Lyme
Westbrook			

New Haven **14%**
6.9%

Bethany	Branford	Cheshire	Clinton
East Haven	Guilford	Hamden	Killingworth
Madison	Meriden	New Haven	North Branford
North Haven	Orange	Wallingford	West Haven
Woodbridge			

New London **8%**
6.9%

Bozrah	Canterbury	East Lyme	Franklin
Griswold	Groton	Ledyard	Lisbon
Montville	New London	North Stonington	Norwich
Old Lyme	Old Saybrook	Plainfield	Preston
Salem	Sprague	Stonington	Waterford
Hopkinton	RI – Westerly Rhode Island		

Stamford **17%**
6.9%

Darien	Greenwich	New Canaan	Norwalk
Stamford	Weston	Westport	Wilton

Torrington **2%**
6.9%

Canaan	Colebrook	Cornwall	Goshen
Hartland	Kent	Litchfield	Morris
Norfolk	North Canaan	Salisbury	Sharon
Torrington	Warren		

Waterbury 6.9%				**10%**
Bethlehem	Middlebury	Naugatuck	Prospect	
Southbury	Thomaston	Waterbury	Watertown	
Wolcott	Woodbury			

EXHIBIT C

Health Insurance Portability and Accountability Act of 1996 ("HIPAA").

(a) If the Contactor is a Business Associate under the requirements of the Health Insurance Portability and Accountability Act of 1996 ("HIPAA"), the Contractor must comply with all terms and conditions of this Section of the Contract. If the Contractor is not a Business Associate under HIPAA, this Section of the Contract does not apply to the Contractor for this Contract.

(b) The Contractor is required to safeguard the use, publication and disclosure of information on all applicants for, and all clients who receive, services under the Contract in accordance with all applicable federal and state law regarding confidentiality, which includes but is not limited to HIPAA, more specifically with the Privacy and Security Rules at 45 C.F.R. Part 160 and Part 164, subparts A, C, and E; and

(c) The State of Connecticut Agency named on page 1 of this Contract (hereinafter the "Department") is a "covered entity" as that term is defined in 45 C.F.R. § 160.103; and

(d) The Contractor, on behalf of the Department, performs functions that involve the use or disclosure of "individually identifiable health information," as that term is defined in 45 C.F.R. § 160.103; and

(e) The Contractor is a "business associate" of the Department, as that term is defined in 45 C.F.R. § 160.103; and

(f) The Contractor and the Department agree to the following in order to secure compliance with the HIPAA, the requirements of Subtitle D of the Health Information Technology for Economic and Clinical Health Act (hereinafter the HITECH Act), (Pub. L. 111-5, sections 13400 to 13423), and more specifically with the Privacy and Security Rules at 45 C.F.R. Part 160 and Part 164, subparts A, C, and E.

(g) Definitions

(1) "Breach shall have the same meaning as the term is defined in section 13400 of the HITECH Act (42 U.S.C. §17921(1))

(2) "Business Associate" shall mean the Contractor.

(3) "Covered Entity" shall mean the Department of the State of Connecticut named on page 1 of this Contract.

(4) "Designated Record Set" shall have the same meaning as the term "designated record set" in 45 C.F.R. § 164.501.

(5) "Electronic Health Record" shall have the same meaning as the term is defined in section 13400 of the HITECH Act (42 U.S.C. §17921(5))

(6) "Individual" shall have the same meaning as the term "individual"' in 45 C.F.R. § 160.103 and shall include a person who qualifies as a personal representative as defined in 45 C.F.R. § 164.502(g).

(7) "Privacy Rule" shall mean the Standards for Privacy of Individually Identifiable Health Information at 45 C.F.R. part 160 and parts 164, subparts A and E.

(8) "Protected Health Information" or "PHI" shall have the same meaning as the term "protected health information" in 45 C.F.R. § 160.103, limited to information created or received by the Business Associate from or on behalf of the Covered Entity.

(9) "Required by Law"' shall have the same meaning as the term "required by law" in 45 C.F.R. § 164.103.

(10) "Secretary" shall mean the Secretary of the Department of Health and Human Services or his designee.

(11) "More stringent" shall have the same meaning as the term "more stringent" in 45 C.F.R. § 160.202.

(12) "This Section of the Contract" refers to the HIPAA Provisions stated herein, in their entirety.

(13) "Security Incident" shall have the same meaning as the term "security incident" in 45 C.F.R.§ 164.304.

(14) "Security Rule" shall mean the Security Standards for the Protection of Electronic Protected Health Information at 45 C.F.R. part 160 and parts 164, subpart A and C.

(15) "Unsecured protected health information" shall have the same meaning as the term as defined in section 13402(h)(1)(A) of HITECH. Act. (42 U.S.C. §17932(h)(1)(A)).

(h) Obligations and Activities of Business Associates.

(1) Business Associate agrees not to use or disclose PHI other than as permitted or required by this Section of the Contract or as Required by Law.

(2) Business Associate agrees to use appropriate safeguards to prevent use or disclosure of PHI other than as provided for in this Section of the Contract.

(3) Business Associate agrees to use administrative, physical and technical safeguards that reasonably and appropriately protect the confidentiality, integrity, and availability of electronic protected health information that it creates, receives, maintains, or transmits on behalf of the Covered Entity.

(4) Business Associate agrees to mitigate, to the extent practicable, any harmful effect that is known to the Business Associate of a use or disclosure of PHI by Business Associate in violation of this Section of the Contract.

(5) Business Associate agrees to report to Covered Entity any use or disclosure of PHI not provided for by this Section of the Contract or any security incident of which it becomes aware.

(6) Business Associate agrees to insure that any agent, including a subcontractor, to whom it provides PHI received from, or created or received by Business Associate, on behalf of the Covered Entity, agrees to the same restrictions and conditions that apply through this Section of the Contract to Business Associate with respect to such information.

(7) Business Associate agrees to provide access, at the request of the Covered Entity, and in the time and manner agreed to by the parties, to PHI in a Designated Record Set, to Covered Entity or, as directed by Covered Entity, to an Individual in order to meet the requirements under 45 C.F.R. § 164.524.

(8) Business Associate agrees to make any amendments to PHI in a Designated Record Set that the Covered Entity directs or agrees to pursuant to 45 C.F.R. § 164.526 at the request of the Covered Entity, and in the time and manner agreed to by the parties.

(9) Business Associate agrees to make internal practices, books, and records, including policies and procedures and PHI, relating to the use and disclosure of PHI received from, or created or received by, Business Associate on behalf of Covered Entity, available to Covered Entity or to the Secretary in a time and manner agreed to by the parties or designated by the Secretary, for purposes of the Secretary determining Covered Entity's compliance with the Privacy Rule.

(10) Business Associate agrees to document such disclosures of PHI and information related to such disclosures as would be required for Covered Entity to respond to a request by an Individual for an accounting of disclosures of PHI in accordance with 45 C.F.R. § 164.528 and section 13405 of the HITECH Act (42 U.S.C. § 17935) and any regulations promulgated thereunder.

(11) Business Associate agrees to provide to Covered Entity, in a time and manner agreed to by the parties, information collected in accordance with clause h. (10) of this Section of the Contract, to permit Covered Entity to respond to a request by an Individual for an accounting of disclosures of PHI in accordance with 45 C.F.R. § 164.528 and section 13405 of the HITECH Act (42 U.S.C. § 17935) and any regulations promulgated thereunder. Business Associate agrees at the Covered Entity's direction to provide an accounting of disclosures of PHI directly to an individual in accordance with 45 C.F.R. § 164.528 and section 13405 of the HITECH Act (42 U.S.C. § 17935) and any regulations promulgated thereunder.

(12) Business Associate agrees to comply with any state or federal law that is more stringent than the Privacy Rule.

(13) Business Associate agrees to comply with the requirements of the HITECH Act relating to privacy and security that are applicable to the Covered Entity and with the requirements of 45 C.F.R. sections 164.504(e), 164.308, 164.310, 164.312, and 164.316.

(14) In the event that an individual requests that the Business Associate (a) restrict disclosures of PHI; (b) provide an accounting of disclosures of the individual's PHI; or (c) provide a copy of the individual's PHI in an electronic health record, the Business Associate agrees to notify the covered entity, in writing, within two business days of the request.

(15) Business Associate agrees that it shall not, directly or indirectly, receive any remuneration in exchange for PHI of an individual without (1) the written approval of the covered entity, unless receipt of remuneration in exchange for PHI is expressly authorized by this Contract and (2) the valid authorization of the individual, except for the purposes provided under section 13405(d)(2) of the HITECH Act,(42 U.S.C. § 17935(d)(2)) and in any accompanying regulations

(16) Obligations in the Event of a Breach

A. The Business Associate agrees that, following the discovery of a breach of unsecured protected health information, it shall notify the Covered Entity of such breach in accordance with the requirements of section 13402 of HITECH (42 U.S.C. 17932(b) and the provisions of this Section of the Contract.
B. Such notification shall be provided by the Business Associate to the Covered Entity without unreasonable delay, and in no case later than 30 days after the breach is discovered by the Business Associate, except as otherwise instructed in writing by a law enforcement official pursuant to section 13402 (g) of HITECH (42 U.S.C. 17932(g)) . A breach is considered discovered as of the first day on which it is, or reasonably should have been, known to the Business Associate. The notification shall include the identification and last known address, phone number and email address of each individual (or the next of kin of the individual if the individual is deceased) whose unsecured protected health information has been, or is reasonably believed by the Business Associate to have been, accessed, acquired, or disclosed during such breach.
C. The Business Associate agrees to include in the notification to the Covered Entity at least the following information:
    1. A brief description of what happened, including the date of the breach and the date of the discovery of the breach, if known.

    2. A description of the types of unsecured protected health information that were involved in the breach (such as full name, Social Security number, date of birth, home address, account number, or disability code).

    3. The steps the Business Associate recommends that individuals take to protect themselves from potential harm resulting from the breach.

    4. A detailed description of what the Business Associate is doing to investigate the breach, to mitigate losses, and to protect against any further breaches.

    5. Whether a law enforcement official has advised either verbally or in writing the Business Associate that he or she has determined that notification or notice to

individuals or the posting required under section 13402 of the HITECH Act would impede a criminal investigation or cause damage to national security and; if so, include contact information for said official.

D. Business Associate agrees to provide appropriate staffing and have established procedures to ensure that individuals informed by the Covered Entity of a breach by the Business Associate have the opportunity to ask questions and contact the Business Associate for additional information regarding the breach. Such procedures shall include a toll-free telephone number, an e-mail address, a posting on its Web site and a postal address. Business Associate agrees to include in the notification of a breach by the Business Associate to the Covered Entity, a written description of the procedures that have been established to meet these requirements. Costs of such contact procedures will be borne by the Contractor.

E. Business Associate agrees that, in the event of a breach, it has the burden to demonstrate that it has complied with all notifications requirements set forth above, including evidence demonstrating the necessity of a delay in notification to the Covered Entity.

(i) Permitted Uses and Disclosure by Business Associate.

(1) General Use and Disclosure Provisions Except as otherwise limited in this Section of the Contract, Business Associate may use or disclose PHI to perform functions, activities, or services for, or on behalf of, Covered Entity as specified in this Contract, provided that such use or disclosure would not violate the Privacy Rule if done by Covered Entity or the minimum necessary policies and procedures of the Covered Entity.

(2) Specific Use and Disclosure Provisions

(A) Except as otherwise limited in this Section of the Contract, Business Associate may use PHI for the proper management and administration of Business Associate or to carry out the legal responsibilities of Business Associate.

(B) Except as otherwise limited in this Section of the Contract, Business Associate may disclose PHI for the proper management and administration of Business Associate, provided that disclosures are Required by Law, or Business Associate obtains reasonable assurances from the person to whom the information is disclosed that it will remain confidential and used or further disclosed only as Required by Law or for the purpose for which it was disclosed to the person, and the person notifies Business Associate of any instances of which it is aware in which the confidentiality of the information has been breached.

(C) Except as otherwise limited in this Section of the Contract, Business Associate may use PHI to provide Data Aggregation services to Covered Entity as permitted by 45 C.F.R. § 164.504(e)(2)(i)(B).

(j) Obligations of Covered Entity.

(1) Covered Entity shall notify Business Associate of any limitations in its notice of privacy practices of Covered Entity, in accordance with 45 C.F.R. § 164.520, or to the extent that such limitation may affect Business Associate's use or disclosure of PHI.

(2) Covered Entity shall notify Business Associate of any changes in, or revocation of, permission by Individual to use or disclose PHI, to the extent that such changes may affect Business Associate's use or disclosure of PHI.

(3) Covered Entity shall notify Business Associate of any restriction to the use or disclosure of PHI that Covered Entity has agreed to in accordance with 45 C.F.R. § 164.522, to the extent that such restriction may affect Business Associate's use or disclosure of PHI.

(k) Permissible Requests by Covered Entity. Covered Entity shall not request Business Associate to use or disclose PHI in any manner that would not be permissible under the Privacy Rule if done by the Covered Entity, except that Business Associate may use and disclose PHI for data aggregation, and management and administrative activities of Business Associate, as permitted under this Section of the Contract.

(l) Term and Termination.

(1) Term. The Term of this Section of the Contract shall be effective as of the date the Contract is effective and shall terminate when the information collected in accordance with clause h. (10) of this Section of the Contract is provided to the Covered Entity and all of the PHI provided by Covered Entity to Business Associate, or created or received by Business Associate on behalf of Covered Entity, is destroyed or returned to Covered Entity, or, if it is infeasible to return or destroy PHI, protections are extended to such information, in accordance with the termination provisions in this Section.

(2) Termination for Cause Upon Covered Entity's knowledge of a material breach by Business Associate, Covered Entity shall either:

(A) Provide an opportunity for Business Associate to cure the breach or end the violation and terminate the Contract if Business Associate does not cure the breach or end the violation within the time specified by the Covered Entity; or

(B) Immediately terminate the Contract if Business Associate has breached a material term of this Section of the Contract and cure is not possible; or

(C) If neither termination nor cure is feasible, Covered Entity shall report the violation to the Secretary.

(3) Effect of Termination

(A) Except as provided in (l)(2) of this Section of the Contract, upon termination of this Contract, for any reason, Business Associate shall return or destroy all PHI received from Covered Entity, or created or received by Business Associate on behalf of Covered Entity. Business Associate shall also provide the information collected in accordance with clause h. (10) of this Section of the Contract to the Covered Entity

within ten business days of the notice of termination. This provision shall apply to PHI that is in the possession of subcontractors or agents of Business Associate. Business Associate shall retain no copies of the PHI.

(B) In the event that Business Associate determines that returning or destroying the PHI is infeasible, Business Associate shall provide to Covered Entity notification of the conditions that make return or destruction infeasible. Upon documentation by Business Associate that return or destruction of PHI is infeasible, Business Associate shall extend the protections of this Section of the Contract to such PHI and limit further uses and disclosures of PHI to those purposes that make return or destruction infeasible, for as long as Business Associate maintains such PHI. Infeasibility of the return or destruction of PHI includes, but is not limited to, requirements under state or federal law that the Business Associate maintains or preserves the PHI or copies thereof.

(m) Miscellaneous Provisions.

(1) Regulatory References. A reference in this Section of the Contract to a section in the Privacy Rule means the section as in effect or as amended.

(2) Amendment. The Parties agree to take such action as in necessary to amend this Section of the Contract from time to time as is necessary for Covered Entity to comply with requirements of the Privacy Rule and the Health Insurance Portability and Accountability Act of 1996, Pub. L. No. 104-191.

(3) Survival. The respective rights and obligations of Business Associate shall survive the termination of this Contract.

(4) Effect on Contract. Except as specifically required to implement the purposes of this Section of the Contract, all other terms of the Contract shall remain in force and effect.

(5) Construction. This Section of the Contract shall be construed as broadly as necessary to implement and comply with the Privacy Standard. Any ambiguity in this Section of the Contract shall be resolved in favor of a meaning that complies, and is consistent with, the Privacy Standard.

(6) Disclaimer. Covered Entity makes no warranty or representation that compliance with this Section of the Contract will be adequate or satisfactory for Business Associate's own purposes. Covered Entity shall not be liable to Business Associate for any claim, civil or criminal penalty, loss or damage related to or arising from the unauthorized use or disclosure of PHI by Business Associate or any of its officers, directors, employees, contractors or agents, or any third party to whom Business Associate has disclosed PHI contrary to the provisions of this Contract or applicable law. Business Associate is solely responsible for all decisions made, and actions taken, by Business Associate regarding the safeguarding, use and disclosure of PHI within its possession, custody or control.

(7) Indemnification. The Business Associate shall indemnify and hold the Covered Entity harmless from and against any and all claims, liabilities, judgments, fines, assessments, penalties, awards and any statutory damages that may be imposed or assessed pursuant to HIPAA, as amended or the

HITECH Act, including, without limitation, attorney's fees, expert witness fees, costs of investigation, litigation or dispute resolution, and costs awarded thereunder, relating to or arising out of any violation by the Business Associate and its agents, including subcontractors, of any obligation of Business Associate and its agents, including subcontractors, under this section of the contract, under HIPAA, the HITECH Act, the Privacy Rule and the Security Rule.

Notice to Executive Branch State Contractors and Prospective State Contractors of Campaign Contribution and Solicitation Limitations

This notice is provided under the authority of Connecticut General Statutes §9-612(g)(2), as amended by P.A. 10-1, and is for the purpose of informing state contractors and prospective state contractors of the following law (italicized words are defined on the reverse side of this page).

CAMPAIGN CONTRIBUTION AND SOLICITATION LIMITATIONS

No *state contractor, prospective state contractor, principal of a state contractor or principal of a prospective state contractor*, with regard to a *state contract* or *state contract solicitation* with or from a state agency in the executive branch or a quasi-public agency or a holder, or principal of a holder of a valid prequalification certificate, shall make a contribution to (i) an exploratory committee or candidate committee established by a candidate for nomination or election to the office of Governor, Lieutenant Governor, Attorney General, State Comptroller, Secretary of the State or State Treasurer, (ii) a political committee authorized to make contributions or expenditures to or for the benefit of such candidates, or (iii) a party committee (which includes town committees).

In addition, no holder or principal of a holder of a valid prequalification certificate, shall make a contribution to (i) an exploratory committee or candidate committee established by a candidate for nomination or election to the office of State senator or State representative, (ii) a political committee authorized to make contributions or expenditures to or for the benefit of such candidates, or (iii) a party committee.

On and after January 1, 2011, no state contractor, prospective state contractor, principal of a state contractor or principal of a prospective state contractor, with regard to a state contract or state contract solicitation with or from a state agency in the executive branch or a quasi-public agency or a holder, or principal of a holder of a valid prequalification certificate, shall **knowingly** *solicit* contributions from the state contractor's or prospective state contractor's employees or from a *subcontractor* or *principals of the subcontractor* on behalf of (i) an exploratory committee or candidate committee established by a candidate for nomination or election to the office of Governor, Lieutenant Governor, Attorney General, State Comptroller, Secretary of the State or State Treasurer, (ii) a political committee authorized to make contributions or expenditures to or for the benefit of such candidates, or (iii) a party committee.

DUTY TO INFORM

State contractors and prospective state contractors are required to inform their principals of the above prohibitions, as applicable, and the possible penalties and other consequences of any violation thereof.

PENALTIES FOR VIOLATIONS

Contributions or solicitations of contributions made in violation of the above prohibitions may result in the following civil and criminal penalties:

Civil penalties—Up to $2,000 or twice the amount of the prohibited contribution, whichever is greater, against a principal or a contractor. Any state contractor or prospective state contractor which fails to make reasonable efforts to comply with the provisions requiring notice to its principals of these prohibitions and the possible consequences of their violations may also be subject to civil penalties of up to $2,000 or twice the amount of the prohibited contributions made by their principals.

Criminal penalties—Any knowing and willful violation of the prohibition is a Class D felony, which may subject the violator to imprisonment of not more than 5 years, or not more than $5,000 in fines, or both.

CONTRACT CONSEQUENCES

In the case of a state contractor, contributions made or solicited in violation of the above prohibitions may resulting the contract being voided.

In the case of a prospective state contractor, contributions made or solicited in violation of the above prohibitions shall result in the contract described in the state contract solicitation not being awarded to the prospective state contractor, unless the State Elections Enforcement Commission determines that mitigating circumstances exist concerning such violation.

The State shall not award any other state contract to anyone found in violation of the above prohibitions for a period of one year after the election for which such contribution is made or solicited, unless the State Elections Enforcement Commission determines that mitigating circumstances exist concerning such violation.
Additional information may be found on the website of the State Elections Enforcement Commission, www.ct.gov/seec. Click on the link to “Lobbyist/Contractor Limitations.”

DEFINITIONS

"State contractor" means a person, business entity or nonprofit organization that enters into a state contract. Such person, business entity or nonprofit organization shall be deemed to be a state contractor until December thirty-first of the year in which such contract terminates. "State contractor" does not include a municipality or any other political subdivision of the state, including any entities or associations duly created by the municipality or political subdivision exclusively amongst themselves to further any purpose authorized by statute or charter, or an employee in the executive or legislative branch of state government or a quasi-public agency, whether in the classified or unclassified service and full or part-time, and only in such person's capacity as a state or quasi-public agency employee.

"Prospective state contractor" means a person, business entity or nonprofit organization that (i) submits a response to a state contract solicitation by the state, a state agency or a quasi-public agency, or a proposal in response to a request for proposals by the state, a state agency or a quasi-public agency, until the contract has been entered into, or (ii) holds a valid prequalification certificate issued by the Commissioner of Administrative Services under section 4a-100. "Prospective state contractor" does not include a municipality or any other political subdivision of the state, including any entities or associations duly created by the municipality or political subdivision exclusively amongst themselves to further any purpose authorized by statute or charter, or an employee in the executive or legislative branch of state government or a quasi-public agency, whether in the classified or unclassified service and full or part-time, and only in such person's capacity as a state or quasi-public agency employee.

"Principal of a state contractor or prospective state contractor" means (i) any individual who is a member of the board of directors of, or has an ownership interest of five per cent or more in, a state contractor or prospective state contractor, which is a business entity, except for an individual who is a member of the board of directors of a nonprofit organization**,** (ii) an individual who is employed by a state contractor or prospective state contractor, which is a business entity, as president, treasurer or executive vice president, (iii) an individual who is the chief executive officer of a state contractor or prospective state contractor, which is not a business entity, or if a state contractor or prospective state contractor has no such officer, then the officer who duly possesses comparable powers and duties, (iv) an officer or an employee of any state contractor or prospective state contractor who has *managerial or discretionary responsibilities with respect to a state contract*, (v) the spouse or a *dependent child* who is eighteen years of age or older of an individual described in this subparagraph, or (vi) a political committee established or controlled by an individual described in this subparagraph or the business entity or nonprofit organization that is the state contractor or prospective state contractor.

"State contract" means an agreement or contract with the state or any state agency or any quasi-public agency, let through a procurement process or otherwise, having a value of fifty thousand dollars or more, or a combination or series of such agreements or contracts having a value of one hundred thousand dollars or more in a calendar year, for (i) the rendition of services, (ii) the furnishing of any goods, material, supplies, equipment or any items of any kind, (iii) the construction, alteration or repair of any public building or public work, (iv) the acquisition, sale or lease of any land or building, (v) a licensing arrangement, or (vi) a grant, loan or loan guarantee. "State contract" does not include any agreement or contract with the state, any state agency or any quasi-public agency that is exclusively federally funded, an education loan, a loan to an individual for other than commercial purposes or any agreement or contract between the state or any state agency and the United States Department of the Navy or the United States Department of Defense.

"State contract solicitation" means a request by a state agency or quasi-public agency, in whatever form issued, including, but not limited to, an invitation to bid, request for proposals, request for information or request for quotes, inviting bids, quotes or other types of submittals, through a competitive procurement process or another process authorized by law waiving competitive procurement.

"Managerial or discretionary responsibilities with respect to a state contract" means having direct, extensive and substantive responsibilities with respect to the negotiation of the state contract and not peripheral, clerical or ministerial responsibilities.

"Dependent child" means a child residing in an individual's household who may legally be claimed as a dependent on the federal income tax of such individual.

"Solicit" means (A) requesting that a contribution be made, (B) participating in any fund-raising activities for a candidate committee, exploratory committee, political committee or party committee, including, but not limited to, forwarding tickets to potential contributors, receiving contributions for transmission to any such committee or bundling contributions, (C) serving as chairperson, treasurer or deputy treasurer of any such committee, or (D) establishing a political committee for the sole purpose of soliciting or receiving contributions for any committee. Solicit does not include: (i) making a contribution that is otherwise permitted by Chapter 155 of the Connecticut General Statutes; (ii) informing any person of a position taken by a candidate for public office or a public official, (iii) notifying the person of any activities of, or contact information for, any candidate for public office; or (iv) serving as a member in any party committee or as an officer of such committee that is not otherwise prohibited in this section.

"Subcontractor" means any person, business entity or nonprofit organization that contracts to perform part or all of the obligations of a state contractor's state contract. Such person, business entity or nonprofit organization shall be deemed to be a subcontractor until December thirty first of the year in which the subcontract terminates. "Subcontractor" does not include (i) a municipality or any other political subdivision of the state, including any entities or associations duly created by the municipality or political subdivision exclusively amongst themselves to further any purpose authorized by statute or charter, or (ii) an employee in the executive or legislative branch of state government or a quasi-public agency, whether in the classified or unclassified service and full or part-time, and only in such person's capacity as a state or quasi-public agency employee.

"Principal of a subcontractor" means (i) any individual who is a member of the board of directors of, or has an ownership interest of five per cent or more in, a subcontractor, which is a business entity, except for an individual who is a member of the board of directors of a nonprofit organization, (ii) an individual who is employed by a subcontractor, which is a business entity, as president, treasurer or executive vice president, (iii) an individual who is the chief executive officer of a subcontractor, which is not a business entity, or if a subcontractor has no such officer, then the officer who duly possesses comparable powers and duties, (iv) an officer or an employee of any subcontractor who has managerial or discretionary responsibilities with respect to a subcontract with a state contractor, (v) the spouse or a dependent child who is eighteen years of age or older of an individual described in this subparagraph, or (vi) a political committee established or controlled by an individual described in this subparagraph or the business entity or nonprofit organization that is the subcontractor.

EXHIBIT E

(state wages will be inserted here)

Minimum Rates and Classifications
for Heavy/Highway Construction

ID#: **H** 21468

Connecticut Department of Labor
Wage and Workplace Standards Division

By virtue of the authority vested in the Labor Commissioner under provisions of Section 31-53 of the General Statutes of Connecticut, as amended, the following are declared to be the prevailing rates and welfare payments and will apply only where the contract is advertised for bid within 20 days of the date on which the rates are established. Any contractor or subcontractor not obligated by agreement to pay to the welfare and pension fund shall pay this amount to each employee as part of his/her hourly wages.

Project Number:

Project Town: Rocky Hill

FAP Number:

State Number: 118-166

Project: Replacement Of Bridge Number 02101 And Number 04179 Route 99 Over Hog Brook

CLASSIFICATION	Hourly Rate	Benefits
01) Asbestos/Toxic Waste Removal Laborers: Asbestos removal and encapsulation (except its removal from mechanical systems which are not to be scrapped), toxic waste removers, blasters. **See Laborers Group 5 and 7**		
1) Boilermaker	33.79	34% + 8.96
1a) Bricklayer, Cement Masons, Cement Finishers, Plasterers, Stone Masons	32.50	28.34
2) Carpenters, Piledrivermen	31.45	23.54

As of: Thursday, December 03, 2015

Project: Replacement Of Bridge Number 02101 And Number 04179 Route 99 Over Hog Brook

2a) Diver Tenders	31.45	23.54
3) Divers	39.91	23.54
03a) Millwrights	31.84	23.99
4) Painters: (Bridge Construction) Brush, Roller, Blasting (Sand, Water, etc.), Spray	45.95	19.35
4a) Painters: Brush and Roller	31.52	19.35
4b) Painters: Spray Only	34.52	19.35
4c) Painters: Steel Only	33.02	18.55

As of: Thursday, December 03, 2015

Project: Replacement Of Bridge Number 02101 And Number 04179 Route 99 Over Hog Brook

4d) Painters: Blast and Spray	34.52	19.35
4e) Painters: Tanks, Tower and Swing	33.52	19.35
5) Electrician (Trade License required: E-1,2 L-5,6 C-5,6 T-1,2 L-1,2 V-1,2,7,8,9)	38.20	23.72 + 3% of gross wage
6) Ironworkers: Ornamental, Reinforcing, Structural, and Precast Concrete Erection	34.47	31.09 + a
7) Plumbers (Trade License required: (P-1,2,6,7,8,9 J-1,2,3,4 SP-1,2) and Pipefitters (Including HVAC Work) (Trade License required: S-1,2,3,4,5,6,7,8 B-1,2,3,4 D-1,2,3,4 G-1, G-2, G-8, G-9)	40.62	28.91
----LABORERS---- -		
8) Group 1: Laborer (Unskilled), Common or General, acetylene burner, concrete specialist	27.85	18.30

As of: Thursday, December 03, 2015

Project: Replacement Of Bridge Number 02101 And Number 04179 Route 99 Over Hog Brook

9) Group 2: Chain saw operators, fence and guard rail erectors, pneumatic tool operators, powdermen	28.10	18.30
10) Group 3: Pipelayers	28.35	18.30
11) Group 4: Jackhammer/Pavement breaker (handheld); mason tenders (cement/concrete), catch basin builders, asphalt rakers, air track operators, block paver, curb setter and forklift operators	28.35	18.30
12) Group 5: Toxic waste removal (non-mechanical systems)	29.85	18.30
13) Group 6: Blasters	29.60	18.30
Group 7: Asbestos/lead removal, non-mechanical systems (does not include leaded joint pipe)	28.85	18.30
Group 8: Traffic control signalmen	16.00	18.30

As of: Thursday, December 03, 2015

Project: Replacement Of Bridge Number 02101 And Number 04179 Route 99 Over Hog Brook

Group 9: Hydraulic Drills	28.60	18.30

----LABORERS (TUNNEL CONSTRUCTION, FREE AIR). Shield Drive and Liner Plate Tunnels in Free Air.----

13a) Miners, Motormen, Mucking Machine Operators, Nozzle Men, Grout Men, Shaft & Tunnel Steel & Rodmen, Shield & Erector, Arm Operator, Cable Tenders	32.22	18.30 + a
13b) Brakemen, Trackmen	31.28	18.30 + a

----CLEANING, CONCRETE AND CAULKING TUNNEL----

14) Concrete Workers, Form Movers, and Strippers	31.28	18.30 + a
15) Form Erectors	31.60	18.30 + a

As of: Thursday, December 03, 2015

Project: Replacement Of Bridge Number 02101 And Number 04179 Route 99 Over Hog Brook

----ROCK SHAFT LINING, CONCRETE, LINING OF SAME AND TUNNEL IN FREE AIR:----

16) Brakemen, Trackmen, Tunnel Laborers, Shaft Laborers	31.28	18.30 + a
17) Laborers Topside, Cage Tenders, Bellman	31.17	18.30 + a
18) Miners	32.22	18.30 + a

----TUNNELS, CAISSON AND CYLINDER WORK IN COMPRESSED AIR: ----

18a) Blaster	38.53	18.30 + a
19) Brakemen, Trackmen, Groutman, Laborers, Outside Lock Tender, Gauge Tenders	38.34	18.30 + a

As of: Thursday, December 03, 2015

Project: Replacement Of Bridge Number 02101 And Number 04179 Route 99 Over Hog Brook

20) Change House Attendants, Powder Watchmen, Top on Iron Bolts	36.41	18.30 + a
21) Mucking Machine Operator	39.11	18.30 + a
----TRUCK DRIVERS----(*see note below)		
Two axle trucks	28.58	20.24 + a
Three axle trucks; two axle ready mix	28.68	20.24 + a
Three axle ready mix	28.73	20.24 + a
Four axle trucks, heavy duty trailer (up to 40 tons)	28.78	20.24 + a

As of: Thursday, December 03, 2015

Project: Replacement Of Bridge Number 02101 And Number 04179 Route 99 Over Hog Brook

Four axle ready-mix	28.83	20.24 + a
Heavy duty trailer (40 tons and over)	29.03	20.24 + a
Specialized earth moving equipment other than conventional type on-the road trucks and semi-trailer (including Euclids)	28.83	20.24 + a
----POWER EQUIPMENT OPERATORS----		
Group 1: Crane handling or erecting structural steel or stone, hoisting engineer (2 drums or over), front end loader (7 cubic yards or over), Work Boat 26 ft. & Over. (Trade License Required)	37.55	23.05 + a
Group 2: Cranes (100 ton rate capacity and over); Excavator over 2 cubic yards; Piledriver ($3.00 premium when operator controls hammer); Bauer Drill/Caisson. (Trade License Required)	37.23	23.05 + a
Group 3: Excavator/Backhoe under 2 cubic yards; Cranes (under 100 ton rated capacity), Gradall; Master Mechanic; Hoisting Engineer (all types of equipment where a drum and cable are used to hoist or drag material regardless of motive power of operation), Rubber Tire Excavator (Drott-1085 or similar);Grader Operator; Bulldozer Fine Grade (slopes, shaping, laser or GPS, etc.). (Trade License Required)	36.49	23.05 + a

As of: Thursday, December 03, 2015

Project: Replacement Of Bridge Number 02101 And Number 04179 Route 99 Over Hog Brook

Group 4: Trenching Machines; Lighter Derrick; Concrete Finishing Machine; CMI Machine or Similar; Koehring Loader (Skooper)	36.10	23.05 + a
Group 5: Specialty Railroad Equipment; Asphalt Paver; Asphalt Spreader; Asphalt Reclaiming Machine; Line Grinder; Concrete Pumps; Drills with Self Contained Power Units; Boring Machine; Post Hole Digger; Auger; Pounder; Well Digger; Milling Machine (over 24" Mandrell)	35.51	23.05 + a
Group 5 continued: Side Boom; Combination Hoe and Loader; Directional Driller.	35.51	23.05 + a
Group 6: Front End Loader (3 up to 7 cubic yards); Bulldozer (rough grade dozer).	35.20	23.05 + a
Group 7: Asphalt Roller; Concrete Saws and Cutters (ride on types); Vermeer Concrete Cutter; Stump Grinder; Scraper; Snooper; Skidder; Milling Machine (24" and Under Mandrel).	34.86	23.05 + a
Group 8: Mechanic, Grease Truck Operator, Hydroblaster, Barrier Mover, Power Stone Spreader; Welder; Work Boat under 26 ft.; Transfer Machine.	34.46	23.05 + a
Group 9: Front End Loader (under 3 cubic yards), Skid Steer Loader regardless of attachments (Bobcat or Similar); Fork Lift, Power Chipper; Landscape Equipment (including hydroseeder).	34.03	23.05 + a

As of: Thursday, December 03, 2015

Project: Replacement Of Bridge Number 02101 And Number 04179 Route 99 Over Hog Brook

Group 10: Vibratory Hammer, Ice Machine, Diesel and Air Hammer, etc.	31.99	23.05 + a
Group 11: Conveyor, Earth Roller; Power Pavement Breaker (whiphammer), Robot Demolition Equipment.	31.99	23.05 + a
Group 12: Wellpoint Operator.	31.93	23.05 + a
Group 13: Compressor Battery Operator.	31.35	23.05 + a
Group 14: Elevator Operator; Tow Motor Operator (Solid Tire No Rough Terrain).	30.21	23.05 + a
Group 15: Generator Operator; Compressor Operator; Pump Operator; Welding Machine Operator; Heater Operator.	29.80	23.05 + a
Group 16: Maintenance Engineer/Oiler	29.15	23.05 + a

As of: Thursday, December 03, 2015

Project: Replacement Of Bridge Number 02101 And Number 04179 Route 99 Over Hog Brook

Group 17: Portable asphalt plant operator; portable crusher plant operator; portable concrete plant operator.	33.46	23.05 + a
Group 18: Power Safety Boat; Vacuum Truck; Zim Mixer; Sweeper; (minimum for any job requiring CDL license).	31.04	23.05 + a

**NOTE: SEE BELOW

----LINE CONSTRUCTION----(Railroad Construction and Maintenance)----

20) Lineman, Cable Splicer, Technician	45.43	6.25%+19.20
21) Heavy Equipment Operator	40.89	6.25%+17.18
22) Equipment Operator, Tractor Trailer Driver, Material Men	38.62	6.25%+16.68

As of: Thursday, December 03, 2015

Project: Replacement Of Bridge Number 02101 And Number 04179 Route 99 Over Hog Brook

23) Driver Groundmen	24.99	6.25%+10.87
23a) Truck Driver	34.07	6.25%+15.41
----LINE CONSTRUCTION----		
24) Driver Groundmen	30.92	6.5% + 9.70
25) Groundmen	22.67	6.5% + 6.20
26) Heavy Equipment Operators	37.10	6.5% + 10.70
27) Linemen, Cable Splicers, Dynamite Men	41.22	6.5% + 12.20

As of: Thursday, December 03, 2015

Project: Replacement Of Bridge Number 02101 And Number 04179 Route 99 Over Hog Brook

28) Material Men, Tractor Trailer Drivers, Equipment Operators	35.04	6.5% + 10.45

As of: Thursday, December 03, 2015

Project: Replacement Of Bridge Number 02101 And Number 04179 Route 99 Over Hog Brook

Welders: Rate for craft to which welding is incidental.

**Note: Hazardous waste removal work receives additional $1.25 per hour for truck drivers.*

***Note: Hazardous waste premium $3.00 per hour over classified rate*

ALL Cranes: When crane operator is operating equipment that requires a fully licensed crane operator to operate he receives an extra $2.00 premium in addition to the hourly wage rate and benefit contributions:

1) Crane handling or erecting structural steel or stone; hoisting engineer (2 drums or over)

2) Cranes (100 ton rate capacity and over) Bauer Drill/Caisson

3) Cranes (under 100 ton rated capacity)

Crane with 150 ft. boom (including jib) - $1.50 extra
Crane with 200 ft. boom (including jib) - $2.50 extra
Crane with 250 ft. boom (including jib) - $5.00 extra
Crane with 300 ft. boom (including jib) - $7.00 extra
Crane with 400 ft. boom (including jib) - $10.00 extra

All classifications that indicate a percentage of the fringe benefits must be calculated at the percentage rate times the "base hourly rate".

Apprentices duly registered under the Commissioner of Labor's regulations on "Work Training Standards for Apprenticeship and Training Programs" Section 31-51-d-1 to 12, are allowed to be paid the appropriate percentage of the prevailing journeymen hourly base and the full fringe benefit rate, providing the work site ratio shall not be less than one full-time journeyperson instructing and supervising the work of each apprentice in a specific trade.

~~Connecticut General Statute Section 31-55a: Annual Adjustments to wage rates by contractors doing state work ~~

The Prevailing wage rates applicable to this project are subject to annual adjustments each July 1st for the duration of the project.

Each contractor shall pay the annual adjusted prevailing wage rate that is in effect each July 1st, as posted by the Department of Labor.

It is the contractor's responsibility to obtain the annual adjusted prevailing wage rate increases directly from the Department of Labor's website.

The annual adjustments will be posted on the Department of Labor's Web page: www.ct.gov/dol.

The Department of Labor will continue to issue the initial prevailing wage rate schedule to the Contracting Agency for the project.

All subsequent annual adjustments will be posted on our Web Site for contractor access.

Contracting Agencies are under no obligation pursuant to State labor law to pay any increase due to the annual adjustment provision.

As of: Thursday, December 03, 2015

Project: Replacement Of Bridge Number 02101 And Number 04179 Route 99 Over Hog Brook

Effective October 1, 2005 - Public Act 05-50: any person performing the work of any mechanic, laborer, or worker shall be paid prevailing wage

All Person who perform work ON SITE must be paid prevailing wage for the appropriate mechanic, laborer, or worker classification.

All certified payrolls must list the hours worked and wages paid to All Persons who perform work ON SITE regardless of their ownership i.e.: (Owners, Corporate Officers, LLC Members, Independent Contractors, et. al)

Reporting and payment of wages is required regardless of any contractual relationship alleged to exist between the contractor and such person.

~~Unlisted classifications needed for work not included within the scope of the classifications listed may be added after award only as provided in the labor standards contract clause (29 CFR 5.5 (a) (1) (ii)).

Please direct any questions which you may have pertaining to classification of work and payment of prevailing wages to the Wage and Workplace Standards Division, telephone (860)263-6790.

As of: Thursday, December 03, 2015

Connecticut Department of Labor
Wage and Workplace Standards Division
FOOTNOTES

Please Note: If the "Benefits" listed on the schedule for the following occupations includes a letter(s) (+ a or + a+b for instance), refer to the information below.

Benefits to be paid at the appropriate prevailing wage rate for the listed occupation.

If the "Benefits" section for the occupation lists only a dollar amount, disregard the information below.

Bricklayers, Cement Masons, Cement Finishers, Concrete Finishers, Stone Masons
(Building Construction) and
(Residential- Hartford, Middlesex, New Haven, New London and Tolland Counties)

a. Paid Holiday: Employees shall receive 4 hours for Christmas Eve holiday provided the employee works the regularly scheduled day before and after the holiday. Employers may schedule work on Christmas Eve and employees shall receive pay for actual hours worked in addition to holiday pay.

Elevator Constructors: Mechanics

a. Paid Holidays: New Year's Day, Memorial Day, Independence Day, Labor Day, Veterans' Day, Thanksgiving Day, Christmas Day, plus the Friday after Thanksgiving.

b. Vacation: Employer contributes 8% of basic hourly rate for 5 years or more of service or 6% of basic hourly rate for 6 months to 5 years of service as vacation pay credit.

Glaziers

a. Paid Holidays: Labor Day and Christmas Day.

Power Equipment Operators
(Heavy and Highway Construction & Building Construction)

a. Paid Holidays: New Year's Day, Good Friday, Memorial day, Independence Day, Labor Day, Thanksgiving Day and Christmas Day, provided the employee works 3 days during the week in which the holiday falls, if scheduled, and if scheduled, the working day before and the working day after the holiday. Holidays falling on Saturday may be observed on Saturday, or if the employer so elects, on the preceding Friday.

Ironworkers

a. Paid Holiday: Labor Day provided employee has been on the payroll for the 5 consecutive work days prior to Labor Day.

Laborers (Tunnel Construction)

a. Paid Holidays: New Year's Day, Memorial Day, Independence Day, Labor Day, Thanksgiving Day and Christmas Day. No employee shall be eligible for holiday pay when he fails, without cause, to work the regular work day preceding the holiday or the regular work day following the holiday.

Roofers

a. Paid Holidays: July 4th, Labor Day, and Christmas Day provided the employee is employed 15 days prior to the holiday.

Sprinkler Fitters

a. Paid Holidays: Memorial Day, July 4th, Labor Day, Thanksgiving Day and Christmas Day, provided the employee has been in the employment of a contractor 20 working days prior to any such paid holiday.

Truck Drivers

(Heavy and Highway Construction & Building Construction)

a. Paid Holidays: New Year's Day, Memorial Day, Independence Day, Labor Day, Thanksgiving Day, Christmas day, and Good Friday, provided the employee has at least 31 calendar days of service and works the last scheduled day before and the first scheduled day after the holiday, unless excused.

Information Bulletin
Occupational Classifications

The Connecticut Department of Labor has the responsibility to properly determine "job classification" on prevailing wage projects covered under C.G.S. Section 31-53.

Note: This information is intended to provide a sample of some occupational classifications for guidance purposes only. It is not an all-inclusive list of each occupation's duties. This list is being provided only to highlight some areas where a contractor may be unclear regarding the proper classification.

Below are additional clarifications of specific job duties performed for certain classifications:

- **ASBESTOS WORKERS**

  Applies all insulating materials, protective coverings, coatings and finishes to all types of mechanical systems.

- **ASBESTOS INSULATOR**

  Handle, install apply, fabricate, distribute, prepare, alter, repair, dismantle, heat and frost insulation, including penetration and fire stopping work on all penetration fire stop systems.

- **BOILERMAKERS**

  Erects hydro plants, incomplete vessels, steel stacks, storage tanks for water, fuel, etc. Builds incomplete boilers, repairs heat exchanges and steam generators.

- **BRICKLAYERS, CEMENT MASONS, CEMENT FINISHERS, MARBLE MASONS, PLASTERERS, STONE MASONS, PLASTERERS. STONE MASONS, TERRAZZO WORKERS, TILE SETTERS**

  Lays building materials such as brick, structural tile and concrete cinder, glass, gypsum, terra cotta block. Cuts, tools and sets marble, sets stone, finishes concrete, applies decorative steel, aluminum and plastic tile, applies cements, sand, pigment and marble chips to floors, stairways, etc.

- **CARPENTERS, MILLWRIGHTS. PILEDRIVERMEN. LATHERS. RESILEINT FLOOR LAYERS, DOCK BUILDERS, DIKERS, DIVER TENDERS**

  Constructs, erects, installs and repairs structures and fixtures of wood, plywood and wallboard. Installs, assembles, dismantles, moves industrial machinery. Drives piling into ground to provide foundations for structures such as buildings and bridges, retaining walls for earth embankments, such as cofferdams. Fastens wooden, metal or rockboard lath to walls, ceilings and partitions of buildings, acoustical tile layer, concrete form builder. Applies firestopping materials on fire resistive joint systems only. Installation of curtain/window walls only where attached to wood or metal studs. Installation of insulated material of all types whether blown, nailed or attached in other ways to walls, ceilings and floors of buildings. Assembly and installation of modular furniture/furniture systems. Free-standing furniture is not covered. This includes free standing: student chairs, study top desks, book box desks, computer furniture, dictionary stand, atlas stand, wood shelving, two-position information access station, file cabinets, storage cabinets, tables, etc.

- **CLEANING LABORER**

  The clean up of any construction debris and the general cleaning, including sweeping, wash down, mopping, wiping of the construction facility, washing, polishing, dusting, etc., prior to the issuance of a certificate of occupancy falls under the *Labor classification.*

- **DELIVERY PERSONNEL**

  If delivery of supplies/building materials is to one common point and stockpiled there, prevailing wages are not required. If the delivery personnel are involved in the distribution of the material to multiple locations within the construction site then they would have to be paid prevailing wages for the type of work performed: laborer, equipment operator, electrician, ironworker, plumber, etc.

  An example of this would be where delivery of drywall is made to a building and the delivery personnel distribute the drywall from one "stockpile" location to further sub-locations on each floor. Distribution of material around a construction site is the job of a laborer/tradesman and not a delivery personnel.

- **ELECTRICIANS**

  Install, erect, maintenance, alteration or repair of any wire, cable, conduit, etc., which generates, transforms, transmits or uses electrical energy for light, heat, power or other purposes, including the Installation or maintenance of telecommunication, LAN wiring or computer equipment, and low voltage wiring. ***License required per Connecticut General Statutes: E-1,2 L-5,6 C-5,6 T-1,2 L-1,2 V-1,2,7,8,9.**

- **ELEVATOR CONSTRUCTORS**

  Install, erect, maintenance and repair of all types of elevators, escalators, dumb waiters and moving walks. ***License required by Connecticut General Statutes: R-1,2,5,6.**

- **FORK LIFT OPERATOR**

  Laborers Group 4) Mason Tenders - operates forklift solely to assist a mason to a maximum height of nine (9) feet only.

  Power Equipment Operator Group 9 - operates forklift to assist any trade, and to assist a mason to a height over nine (9) feet.

- **GLAZIERS**

  Glazing wood and metal sash, doors, partitions, and 2 story aluminum storefronts. Installs glass windows, skylights, store fronts and display cases or surfaces such as building fronts, interior walls, ceilings and table tops and metal store fronts. Installation of aluminum window walls and curtain walls is the "joint" work of glaziers and ironworkers which requires either a blended rate or equal composite workforce.

- **IRONWORKERS**

  Erection, installation and placement of structural steel, precast concrete, miscellaneous iron, ornamental iron, metal curtain wall, rigging and reinforcing steel. Handling, sorting, and installation of reinforcing steel (rebar). Metal bridge rail (traffic), metal bridge handrail, and decorative security fence installation. Installation of aluminum window walls and curtain walls is the "joint" work of glaziers and ironworkers which requires either a blended rate or equal composite workforce. Insulated metal and insulated composite panels are still installed by the Ironworker.

- **INSULATOR**

  Installing fire stopping systems/materials for "Penetration Firestop Systems": transit to cables, electrical conduits, insulated pipes, sprinkler pipe penetrations, ductwork behind radiation, electrical cable trays, fire rated pipe penetrations, natural polypropylene, HVAC ducts, plumbing bare metal, telephone and communication wires, and boiler room ceilings. Past practice using the applicable licensed trades, Plumber, Sheet Metal, Sprinkler Fitter, and Electrician, is not inconsistent with the Insulator classification and would be permitted.

- **LABORERS**

  Acetylene burners, asphalt rakers, chain saw operators, concrete and power buggy operator, concrete saw operator, fence and guard rail erector (except metal bridge rail (traffic), metal bridge handrail, and decorative security fence installation.), hand operated concrete vibrator operator, mason tenders, pipelayers (installation of storm drainage or sewage lines on the street only), pneumatic drill operator, pneumatic gas and electric drill operator, powermen and wagon drill operator, air track operator, block paver, curb setters, blasters, concrete spreaders.

- **PAINTERS**

  Maintenance, preparation, cleaning, blasting (water and sand, etc.), painting or application of any protective coatings of every description on all bridges and appurtenances of highways, roadways, and railroads. Painting, decorating, hardwood finishing, paper hanging, sign writing, scenic art work and drywall hhg for any and all types of building and residential work.

- **LEAD PAINT REMOVAL**

  Painter's Rate
  1. Removal of lead paint from bridges.
  2. Removal of lead paint as preparation of any surface to be repainted.
  3. Where removal is on a Demolition project prior to reconstruction.

  Laborer's Rate
  1. Removal of lead paint from any surface NOT to be repainted.
  2. Where removal is on a *TOTAL* Demolition project only.

- **PLUMBERS AND PIPEFITTERS**

  Installation, repair, replacement, alteration or maintenance of all plumbing, heating, cooling and piping. ***License required per Connecticut General Statutes: P-1,2,6,7,8,9 J-1,2,3,4 SP-1,2 S-1,2,3,4,5,6,7,8 B-1,2,3,4 D-1,2,3,4.***

- **POWER EQUIPMENT OPERATORS**

  Operates several types of power construction equipment such as compressors, pumps, hoists, derricks, cranes, shovels, tractors, scrapers or motor graders, etc. Repairs and maintains equipment. ***License required, crane operators only, per Connecticut General Statutes.**

- **ROOFERS**

  Covers roofs with composition shingles or sheets, wood shingles, slate or asphalt and gravel to waterproof roofs, including preparation of surface. (tear-off and/or removal of any type of roofing and/or clean-up of any and all areas where a roof is to be relaid)

- **SHEETMETAL WORKERS**

  Fabricate, assembles, installs and repairs sheetmetal products and equipment in such areas as ventilation, air-conditioning, warm air heating, restaurant equipment, architectural sheet metal work, sheetmetal roofing, and aluminum gutters. Fabrication, handling, assembling, erecting, altering, repairing, etc. of coated metal material panels and composite metal material panels when used on building exteriors and interiors as soffits, facia, louvers, partitions, wall panel siding, canopies, cornice, column covers, awnings, beam covers, cladding, sun shades, lighting troughs, spires, ornamental roofing, metal ceilings, mansards, copings, ornamental and ventilation hoods, vertical and horizontal siding panels, trim, etc. The sheet metal classification also applies to the vast variety of coated metal material panels and composite metal material panels that have evolved over the years as an alternative to conventional ferrous and non-ferrous metals like steel, iron, tin, copper, brass, bronze, aluminum, etc. Insulated metal and insulated composite panels are still installed by the Iron Worker. Fabrication, handling, assembling, erecting, altering, repairing, etc. of architectural metal roof, standing seam roof, composite metal roof, metal and composite bathroom/toilet partitions, aluminum gutters, metal and composite lockers and shelving, kitchen equipment, and walk-in coolers.

- **SPRINKLER FITTERS**

  Installation, alteration, maintenance and repair of fire protection sprinkler systems. ***License required per Connecticut General Statutes: F-1,2,3,4.**

- **TILE MARBLE AND TERRAZZO FINISHERS**

  Assists and tends the tile setter, marble mason and terrazzo worker in the performance of their duties.

- **TRUCK DRIVERS**

Definitions:

1) "Site of the work" (29 Code of Federal Regulations (CFR) 5.2(l)(b) is the physical place or places where the building or work called for in the contract will remain and any other site where a significant portion of the building or work is constructed, provided that such site is established specifically for the performance of the contact or project;

(a) Except as provided in paragraph (l) (3) of this section, job headquarters, tool yards, batch plants, borrow pits, etc. are part of the "site of the work"; provided they are dedicated exclusively, or nearly so, to the performance of the contract or project, and provided they are adjacent to "the site of work" as defined in paragraph (e)(1) of this section;

(b) Not included in the "site of the work" are permanent home offices, branch plant establishments, fabrication plants, tool yards etc, of a contractor or subcontractor whose location and continuance in operation are determined wholly without regard to a particular State or political subdivision contract or uncertain and indefinite periods of time involved of a few seconds or minutes duration and where the failure to count such time is due to consideration justified by industrial realities (29 CFR 785.47)

2) "Engaged to wait" is waiting time that belongs to and is controlled by the employer which is an integral part of the job and is therefore compensable as hours worked. (29 CFR 785.15)

3) "Waiting to be engaged" is waiting time that an employee can use effectively for their own purpose and is not compensable as hours worked. (29 CFR 785.16)

4) "De Minimus" is a rule that recognizes that unsubstantial or insignificant periods of time which cannot as a practical administrative matter be precisely recorded for payroll purposes, may be disregarded. This rule applies only where there are uncertain and indefinite periods of time involved of a short duration and where the failure to count such time is due to consideration justified by worksite realities. For example, with respect to truck drivers on prevailing wage sites, this is typically less than 15 minutes at a time.

Coverage of Truck Drivers on State or Political subdivision Prevailing Wage Projects

Truck drivers <u>are covered</u> for payroll purposes under the following conditions:

- Truck Drivers for time spent working on the site of the work.

- Truck Drivers for time spent loading and/or unloading materials and supplies on the site of the work, if such time is not de minimus

- Truck drivers transporting materials or supplies between a facility that is deemed part of the site of the work and the actual construction site.

- Truck drivers transporting portions of the building or work between a site established specifically for the performance of the contract or project where a significant portion of such building or work is constructed and the physical places where the building or work outlined in the contract will remain.

For example: Truck drivers delivering asphalt are covered under prevailing wage while" engaged to wait" on the site and when directly involved in the paving operation, provided the total time is not "de minimus"

Truck Drivers <u>are not</u> covered in the following instances:

- Material delivery truck drivers while off "the site of the work"

- Truck Drivers traveling between a prevailing wage job and a commercial supply facility while they are off the "site of the work"

- Truck drivers whose time spent on the "site of the work" is de minimus, such as under 15 minutes at a time, merely to drop off materials or supplies, including asphalt.

These guidelines are similar to U.S. Labor Department policies. The application of these guidelines may be subject to review based on factual considerations on a case by case basis.

For example:

- Material men and deliverymen are not covered under prevailing wage as long as they are not directly involved in the construction process. If, they unload the material, they would then be covered by prevailing wage for the classification they are performing work in: laborer, equipment operator, etc.
- Hauling material off site is not covered provided they are not dumping it at a location outlined above.
- Driving a truck on site and moving equipment or materials on site would be considered covered work, as this is part of the construction process.

Any questions regarding the proper classification should be directed to:
Public Contract Compliance Unit
Wage and Workplace Standards Division
Connecticut Department of Labor
200 Folly Brook Blvd, Wethersfield, CT 06109
(860) 263-6543

Statute 31-55a

Last Updated: June 02, 2008

- Special Notice -

To All State and Political Subdivisions,Their Agents, and Contractors

Connecticut General Statute 31-55a - Annual adjustments to wage rates by contractors doing state work.

Each contractor that is awarded a contract on or after October 1, 2002, for (1) the construction of a state highway or bridge that falls under the provisions of section 31-54 of the general statutes, or (2) the construction, remodeling, refinishing, refurbishing, rehabilitation, alteration or repair of any public works project that falls under the provisions of section 31-53 of the general statutes shall contact the Labor Commissioner on or before July first of each year, for the duration of such contract, to ascertain the prevailing rate of wages on an hourly basis and the amount of payment or contributions paid or payable on behalf of each mechanic, laborer or worker employed upon the work contracted to be done, and shall make any necessary adjustments to such prevailing rate of wages and such payment or contributions paid or payable on behalf of each such employee, effective each July first.

- The prevailing wage rates applicable to any contract or subcontract awarded on or after October 1, 2002 are subject to annual adjustments each July 1st for the duration of any project which was originally advertised for bids on or after October 1, 2002.
- Each contractor affected by the above requirement shall pay the annual adjusted prevailing wage rate that is in effect each July 1st, as posted by the Department of Labor.
- It is the ***contractor's*** responsibility to obtain the annual adjusted prevailing wage rate increases directly from the Department of Labor's Web Site. The annual adjustments will be posted on the Department of Labor Web page: www.ctdol.state.ct.us. For those without internet access, please contact the division listed below.
- The Department of Labor will continue to issue the initial prevailing wage rate schedule to the Contracting Agency for the project. All subsequent annual adjustments will be posted on our Web Site for contractor access.

Any questions should be directed to the Contract Compliance Unit, Wage and Workplace

Standards Division, Connecticut Department of Labor, 200 Folly Brook Blvd., Wethersfield, CT 06109 at (860)263-6790.

Workplace Laws

Published by the Connecticut Department of Labor, Project Management Office

November 29, 2006

Notice

To All Mason Contractors and Interested Parties Regarding Construction Pursuant to Section 31-53 of the Connecticut General Statutes (Prevailing Wage)

The Connecticut Labor Department Wage and Workplace Standards Division is empowered to enforce the prevailing wage rates on projects covered by the above referenced statute.

Over the past few years the Division has withheld enforcement of the rate in effect for workers who operate a forklift on a prevailing wage rate project due to a potential jurisdictional dispute.

The rate listed in the schedules and in our Occupational Bulletin (see enclosed) has been as follows:

Forklift Operator:

- **Laborers (Group 4) Mason Tenders -** operates forklift solely to assist a mason to a maximum height of nine feet only.

- **Power Equipment Operator (Group 9) -** operates forklift to assist any trade and to assist a mason to a height over nine feet.

The U.S. Labor Department conducted a survey of rates in Connecticut but it has not been published and the rate in effect remains as outlined in the above Occupational Bulletin.

Since this is a classification matter and not one of jurisdiction, effective January 1, 2007 the Connecticut Labor Department will enforce the rate on each schedule in accordance with our statutory authority.

Your cooperation in filing appropriate and accurate certified payrolls is appreciated.

Informational Bulletin

THE 10-HOUR OSHA CONSTRUCTION SAFETY AND HEALTH COURSE

(applicable to public building contracts entered into *on or after July 1, 2007,* where the total cost of all work to be performed is at least $100,000)

(1) This requirement was created by Public Act No. 06-175, which is codified in Section 31-53b of the Connecticut General Statutes (pertaining to the prevailing wage statutes);

(2) The course is required for public building construction contracts (projects funded in whole or in part by the state or any political subdivision of the state) entered into on or after July 1, 2007;

(3) It is required of private employees (not state or municipal employees) and apprentices who perform manual labor for a general contractor or subcontractor on a public building project where the total cost of all work to be performed is at least $100,000;

(4) The ten-hour construction course pertains to the ten-hour Outreach Course conducted in accordance with federal OSHA Training Institute standards, and, for telecommunications workers, a ten-hour training course conducted in accordance with federal OSHA standard, 29 CFR 1910.268;

(5) The internet website for the federal OSHA Training Institute is http://www.osha.gov/fso/ote/training/edcenters/fact_sheet.html;

(6) The statutory language leaves it to the contractor and its employees to determine who pays for the cost of the ten-hour Outreach Course;

(7) Within 30 days of receiving a contract award, a general contractor must furnish proof to the Labor Commissioner that all employees and apprentices performing manual labor on the project will have completed such a course;

(8) Proof of completion may be demonstrated through either: (a) the presentation of a *bona fide* student course completion card issued by the federal OSHA Training Institute; *or* (2) the presentation of documentation provided to an employee by a trainer certified by the Institute pending the actual issuance of the completion card;

(9) Any card with an issuance date more than 5 years prior to the commencement date of the construction project shall not constitute proof of compliance;

(10) Each employer shall affix a copy of the construction safety course completion card to the certified payroll submitted to the contracting agency in accordance with Conn. Gen. Stat. § 31-53(f) on which such employee's name first appears;

(11) Any employee found to be in non-compliance shall be subject to removal from the worksite if such employee does not provide satisfactory proof of course completion to the Labor Commissioner by the fifteenth day after the date the employee is determined to be in noncompliance;

(12) Any such employee who is determined to be in noncompliance may continue to work on a public building construction project for a maximum of fourteen consecutive calendar days while bringing his or her status into compliance;

(13) The Labor Commissioner may make complaint to the prosecuting authorities regarding any employer or agent of the employer, or officer or agent of the corporation who files a false certified payroll with respect to the status of an employee who is performing manual labor on a public building construction project;

(14) The statute provides the minimum standards required for the completion of a safety course by manual laborers on public construction contracts; any contractor can exceed these minimum requirements; and

(15) Regulations clarifying the statute are currently in the regulatory process, and shall be posted on the CTDOL website as soon as they are adopted in final form.

(16) Any questions regarding this statute may be directed to the Wage and Workplace Standards Division of the Connecticut Labor Department via the internet website of http://www.ctdol.state.ct.us/wgwkstnd/wgemenu.htm; or by telephone at (860)263-6790.

THE ABOVE INFORMATION IS PROVIDED EXCLUSIVELY AS AN EDUCATIONAL RESOURCE, AND IS NOT INTENDED AS A SUBSTITUTE FOR LEGAL INTERPRETATIONS WHICH MAY ULTMATELY ARISE CONCERNIG THE CONSTRUCTION OF THE STATUTE OR THE REGULATIONS.

Sec. 31-53b. **Construction safety and health course**. **Proof of completion required for employees on public building projects. Enforcement. Regulations**. (a) Each contract entered into on or after July 1, 2007, for the construction, remodeling, refinishing, refurbishing, rehabilitation, alteration or repair of any public building project by the state or any of its agents, or by an political subdivision of the state or any of its agents, where the total cost of all work to be performed by all contractors and subcontractors in connection with the contract is at least one hundred thousand dollars, shall contain a provision requiring that, not later than thirty days after the date such contract is awarded, each contractor furnish proof to the Labor Commissioner that all employees performing manual labor on or in such public building, pursuant to such contract, have completed a course of at least ten hours in duration in construction safety and health approved by the federal Occupational Safety and Health Administration or, in the case of telecommunications employees, have completed at least ten hours of training in accordance with 29 CFR 1910.268.

(b) Any employee required to complete a construction safety and health course required under subsection (a) of this section who has not completed the course shall be subject to removal from the worksite if the employee does not provide documentation of having completed such course by the fifteenth day after the date the employee is found to be in noncompliance. The Labor Commissioner or said commissioner's designee shall enforce this section.

(c) Not later than January 1, 2007, the Labor Commissioner shall adopt regulations, in accordance with the provisions of chapter 54, to implement the provisions of subsections (a) and (b) of this section. Such regulations shall require that the ten-hour construction safety and health courses required under subsection (a) of this section be conducted in accordance with federal Occupational Safety and Health Administration Training Institute standards, or in accordance with 29 CFR 1910.268, as appropriate. The Labor Commissioner shall accept as sufficient proof of compliance with the provisions of subsection (a) or (b) of this section a student course completion card issued by the federal Occupational Safety and Health Administration Training Institute, or such other proof of compliance said commissioner deems appropriate, dated no earlier than five years before the commencement date of such public works project.

(d) For the purposes of this section, "public building" means a structure, paid for in whole or in part with state funds, within a roof and within exterior walls or fire walls, designed for the housing, shelter, enclosure and support or employment of people, animals or property of any kind, including, but not limited to, sewage treatment plants and water treatment plants, "Public building" does not include site work, roads or bridges, rail lines, parking lots or underground water, sewer or drainage systems including pump houses or other utility systems.

CONNECTICUT DEPARTMENT OF LABOR
WAGE AND WORKPLACE STANDARDS DIVISION

CONTRACTORS WAGE CERTIFICATION FORM

I,_____of _____
Officer, Owner, Authorized Rep. Company Name

do hereby certify that the _____
Company Name

_____
Street

_____
City

and all of its subcontractors will pay all workers on the

_____
Project Name and Number

_____
Street and City

the wages as listed in the schedule of prevailing rates required for such project (a copy of which is attached hereto).

_____
Signed

Subscribed and sworn to before me this _____ day of _____,

_____
Notary Public

☞ Return to:

Connecticut Department of Labor
Wage & Workplace Standards Division
200 Folly Brook Blvd.
Wethersfield, CT 06109